H3-45

REV.	DATE	O.C.	EFF.	DESCRIPTION	PAGE(S)	BY	CHECKED	APPROVED
0	2022/10/09	2018032	R-1453	P9660	All	S.B.	G.P	G.P
1	2022/10/27	NA	NA	UPDATE	A , 0 , 30.3, 31.2	S.C.	E.O	E.O
2	2022/12/01	2021102	R-1498	SPEAKERS VISATON	0,35.6	S.C.	G.P.	G.P.
3	2023/01/24	NA	NA	UPDATE	0,26.5,	S.B.	E.O	E.O
				UPDATE	1.2, 2.1, 2.2, 3.2, 6.1,6.2, 6.3, 7.1, 9.1, 10.1, 17.1,26.1, 29.1, 38.1	P.G	E.O	E.O
3-5	2023-03-20	2018032		Resistor added to Front Flasher and Low Beam and Update	0, 26.1, 34.1	P.G.	EO	EO
4	2023-03-28	2022123		New Fan Condenser SPAL an update	0, 3.1, 4.2, 5.1, 8.1, 18.2, 19.1, 23.1, 26.1, 37.1, 39.1	P.G.	EO	EO
5	2023-09-01	NA		Modification to heated Mirror	0, 4.2, 31.1	P.G.	EO	EO
6	2023-12-15	2022123		New Fan Condenser SPAL and update	0,5.1,3.1,23.1,26.6,14.1,18.2, A,C1,L,F,10.1	S.B.	EO	EO

	WIRING DIAGRAM	DWG NO.: D062140 p0	REV.: 6

Wiring diagram pages list

Wiring diagram	pages						
Multiplex outputs list	**B1**	Destination sign	28.2	**I**		**S**	
Multiplex inputs list	**B2**	Digital clock	28.1	Indirect lighting	23.1	Sound system	35.6 - 35.8
Multiplex error messages	**B3**	Driver's light & backlight	19.1	Ignition	3.2	Sound sys.-Speakers	35.2
Layout vehicule - harness	**C1**	Driver Seat	30.3	ISM Parcel Rack	5.2	Sound sys.-Video dist.	35.3
Sound system	**C2**	Driver window	30.1			Sound sys.-Seat audio	35.7
Pins configuration	**D**	**E**		**K**		Spares wires	8.1
Circuits list	**E**	ELD Gateway	42.4	Kneeling system	32.1	Stop lights	26.2
Circuit breakers list	**F**	Emergency Lights	45			Steering control ZF	37.2
Connectors list	**G**	EMirror	31.2	**L**		Step lights	29.1
Diodes list	**H**	Engine ECU	14.1	Lavatory	11.1	Strip Lighting	21.1
Resistors list	**J**	Engine heater	14.1	Line Departure Warning	16.2	Sun visor	41.1
Relays list	**K**	Engine start	3.2	Low buoy	32.1		
Fuses list	**L**	Engine & RJB cmpt. Light	25.1	Luggage door lock/unlock	33.1	**T**	
Wire identification chart	**M**	Entrance door & lights	29.1			Tag	32.1
		ESP	16.1	**M**		Tail & licence lights	26.2
A				Main dist. ignition & batt.	3.1	Tire pressure monitor	39.1
ACB	39.1	**F**		Markers lights	26.1 - 26.2	Trailer package	26.4
Air dryer	37.1	Fast idle	14.1	Mirrors	31.1	Trailer park brake	12.2
Alternators	1.1	Fans radiator	13.1	Multiplex power distribution	7.1	Transmission ECU	15.1-15.2
Alternators Remy	1.2	Fire alarm	38.1	Multiplex network	6.1 - 6.2		
Aisle Lights	20.1	Fire suppression system	38.1			**U**	
		Flashers	26.1-26.2	**P**		Urea system	14.2
B		Fog lights	26.5	Parcel rack A/C system	18.3		
Back-up camera	28.1	Forward Collision Warning	16.2	Park brake sensor	12.1	**V**	
Back-up warnings	26.3	Fuel gauge	10.1	Park brake trailer sensor	12.2	Volvo link TGW	37.1
Batteries & Equalizer	1.1			Power distribution FJB 12V	4.1		
Brake pedal sensor	12.1	**G**		Power distribution FJB 24V	4.2	**W**	
		Grounds electronic	2.1	Pwr dist. RJB 12V & 24V	5.1	Wall Led Strips	24.1
C		Grounds chassis	2.2	Power outlets 12V	30.2	Water pre-heater	17.1
Camera	44			Power outlets 120VAC	40.1	Wheel chair lift Ricon	36.1
Clearance lights	26.1-26.2	**H**				WIFI	35.9
Cluster	10.1	Hazard	26.1	**R**		Windows ajar	27.1
Cornering lights	26.5	Head lights	26.1	Reading lamps	22.2	Wipers & washer	34.1
Cruise Control	16.2	Horn	9.1	Retarder	12.1 - 15.1		
		Hostess chime	22.1	Roof Hatches With Fan	18.5		
D		Hvac defroster	18.1				
Dash lights	19.1	Hvac passenger	18.2				

Wiring diagram pages list

Wiring diagram	pages						
Multiplex outputs list	**B1**	Destination sign	28.2	**I**		**S**	
Multiplex inputs list	**B2**	Digital clock	28.1	Indirect lighting	23.1	Sound system	35.6 - 35.8
Multiplex error messages	**B3**	Driver's light & backlight	19.1	Ignition	3.2	Sound sys.-Speakers	35.2
Layout vehicule - harness	**C1**	Driver Seat	30.3	ISM Parcel Rack	5.2	Sound sys.-Video dist.	35.3
Sound system	**C2**	Driver window	30.1			Sound sys.-Seat audio	35.7
Pins configuration	**D**	**E**		**K**		Spares wires	8.1
Circuits list	**E**	ELD Gateway	42.4	Kneeling system	32.1	Stop lights	26.2
Circuit breakers list	**F**	Emergency Lights	45			Steering control ZF	37.2
Connectors list	**G**	Emirror	31.2	**L**		Step lights	29.1
Diodes list	**H**	Engine ECU	14.1	Lavatory	11.1	Strip Lighting	21.1
Resistors list	**J**	Engine heater	14.1	Line Departure Warning	16.2	Sun visor	41.1
Relays list	**K**	Engine start	3.2	Low buoy	32.1		
Fuses list	**L**	Engine & RJB cmpt. Light	25.1	Luggage door lock/unlock	33.1	**T**	
Wire identification chart	**M**	Entrance door & lights	29.1			Tag	32.1
		Entrance Step lights	29.2	**M**		Tail & licence lights	26.2
A		ESP	16.1	Main dist. ignition & batt.	3.1	Tire pressure monitor	39.1
ACB	39.1	**F**		Markers lights	26.1 - 26.2	Trailer package	26.4
Air dryer	37.1	Fast idle	14.1	Mirrors	31.1	Trailer park brake	12.2
Alternators	1.1	Fans radiator	13.1	Multiplex power distribution	7.1	Transmission ECU	15.1-15.2
Alternators Remy	1.2	Fire alarm	38.1	Multiplex network	6.1 - 6.2		
Aisle Lights	20.1	Fire suppression system	38.1			**U**	
		Flashers	26.1-26.2	**P**		Urea system	14.2
B		Fog lights	26.5	Parcel rack A/C system	18.3		
Back-up camera	28.1	Forward Collision Warning	16.2	Park brake sensor	12.1	**V**	
Back-up warnings	26.3	Fuel gauge	10.1	Park brake trailer sensor	12.2	Volvo link TGW	37.1
Batteries & Equalizer	1.1			Power distribution FJB 12V	4.1		
Brake pedal sensor	12.1	**G**		Power distribution FJB 24V	4.2	**W**	
		Grounds electronic	2.1	Pwr dist. RJB 12V & 24V	5.1	Wall Led Strips	24.1
C		Grounds chassis	2.2	Power outlets 12V	30.2	Water pre-heater	17.1
Camera	44			Power outlets 120VAC	40.1	Wheel chair lift Ricon	36.1
Clearance lights	26.1-26.2	**H**				WIFI	35.9
Cluster	10.1	Hazard	26.1	**R**		Windows ajar	27.1
Cornering lights	26.5	Head lights	26.1	Reading lamps	22.1	Wipers & washer	34.1
Cruise Control	16.2	Horn	9.1	Retarder	12.1 - 15.1		
		Hostess chime	22.2	Roof Hatches With Fan	18.5		
D		Hvac defroster	18.1				
Dash lights	19.1	Hvac passenger	18.2				

H3-45

REV.	DATE	O.C.	EFF.	DESCRIPTION	PAGE(S)	BY	CHECKED	APPROVED
0	2022/10/09	2018032	R-1453	P9660	All	S.B.	G.P	G.P
1	2022/10/27	NA	NA	UPDATE	A , 0 , 30.3, 31.2	S.C.	E.O	E.O
2	2022/12/01	2021102		SPEAKERS VISATON	0,35.6	S.C.	G.P.	G.P.
3	2023/01/24	NA	NA	UPDATE	0,26.5,	S.B.	E.O	E.O
				UPDATE	1.2, 2.1, 2.2, 3.2, 6.1,6.2, 6.3, 7.1, 9.1, 10.1, 17.1,26.1, 29.1, 38.1	P.G	E.O	E.O

Wiring diagram pages list

Wiring diagram	pages						
Multiplex outputs list	**B1**	Destination sign	28.2	**I**		**S**	
Multiplex inputs list	**B2**	Digital clock	28.1	Indirect lighting	23.1	Sound system	35.6 - 35.8
Multiplex error messages	**B3**	Driver's light & backlight	19.1	Ignition	3.2	Sound sys.-Speakers	35.2
Layout vehicule - harness	**C1**	Driver Seat	30.3	ISM Parcel Rack	5.2	Sound sys.-Video dist.	35.3
Sound system	**C2**	Driver window	30.1			Sound sys.-Seat audio	35.7
Pins configuration	**D**	**E**		**K**		Spares wires	8.1
Circuits list	**E**	ELD Gateway	42.4	Kneeling system	32.1	Stop lights	26.2
Circuit breakers list	**F**	Emergency Lights	45			Steering control ZF	37.2
Connectors list	**G**	Engine ECU	14.1	**L**		Step lights	29.1
Diodes list	**H**	Engine heater	14.1	Lavatory	11.1	Strip Lighting	21.1
Resistors list	**J**	Engine start	3.2	Line Departure Warning	16.2	Sun visor	41.1
Relays list	**K**	Engine & RJB cmpt. Light	25.1	Low buoy	32.1		
Fuses list	**L**	Entrance door & lights	29.1	Luggage door lock/unlock	33.1	**T**	
Wire identification chart	**M**	ESP	16.1			Tag	32.1
				M		Tail & licence lights	26.2
A		**F**		Main dist. ignition & batt.	3.1	Tire pressure monitor	39.1
ACB	39.1	Fast idle	14.1	Markers lights	26.1 - 26.2	Trailer package	26.4
Air dryer	37.1	Fans radiator	13.1	Mirrors	31.1	Trailer park brake	12.2
Alternators	1.1	Fire alarm	38.1	Multiplex power distribution	7.1	Transmission ECU	15.1-15.2
Alternators Remy	1.2	Fire suppression system	38.1	Multiplex network	6.1 - 6.2		
Aisle Lights	20.1	Flashers	26.1-26.2			**U**	
		Fog lights	26.5	**P**		Urea system	14.2
B		Forward Collision Warning	16.2	Parcel rack A/C system	18.3		
Back-up camera	28.1	Fuel gauge	10.1	Park brake sensor	12.1	**V**	
Back-up warnings	26.3			Park brake trailer sensor	12.2	Volvo link TGW	37.1
Batteries & Equalizer	1.1	**G**		Power distribution FJB 12V	4.1		
Brake pedal sensor	12.1	Grounds electronic	2.1	Power distribution FJB 24V	4.2	**W**	
		Grounds chassis	2.2	Pwr dist. RJB 12V & 24V	5.1	Wall Led Strips	24.1
C				Power outlets 12V	30.2	Water pre-heater	17.1
Camera	44	**H**		Power outlets 120VAC	40.1	Wheel chair lift Ricon	36.1
Clearance lights	26.1-26.2	Hazard	26.1			WIFI	35.9
Cluster	10.1	Head lights	26.1	**R**		Windows ajar	27.1
Cornering lights	26.5	Horn	9.1	Reading lamps	22.2	Wipers & washer	34.1
Cruise Control	16.2	Hostess chime	22.2	Retarder	12.1 - 15.1		
		Hvac defroster	18.1	Roof Hatches With Fan	18.5		
D		Hvac passenger	18.2				
Dash lights	19.1						

DESCRIPTION	P9660
CHANGE ORDER	2018032
EFFECTIVE VEHICLE	R-1453
wiring revision	0
ACB_Gen2	0610245
Adaptor Phantom Feed - Radio Antenna	22480495
Adaptor Fakra to Motorola - Radio Antenna	901727
Antenna cable - AM/FM/DBA	901728
ailse_light_extension	idemX3_069424
AFSS Eberspasher Harness	0600144
AFSS ProHeat Harness	0600089
AirHorn_harness	idemX3_0610004
Aisle_lights_harness	0600110
Alt_battery_LH	060682
Alt_battery_LH_REMY	0610053
Alt_battery	060684
Alt_battery_REMY	0610052
Alt_chassis_GND	idemX3_060264
Alt_chassis_GND_REMY	0610034
Alt_Jumper_Power	idemX3_060265
Alt_LH_chassis_GND	idemX3_069504
Alt_LH_chassis_GND_REMY	0610035
Alternator_Ctrl_RH_harness_BOSCH	0600111
Alternator_Ctrl_RH_harness_REMY	0600113
Alternator_Ctrl_LH_harness_BOSCH	0600112
Alternator_Ctrl_LH_harness_REMY	0600114
Batt_charger_120V_inlet	0600155
Batt_charger_120V_Xantrex	0600133
battery_12Vd_harness	060686
battery_24Vd_harness	060691
Battery__Cable	062371
Battery_GND_Electro_harness	060693
Battery_Gnd_Harness	063592_microstation
Beru_antenna	idemX3_0610143
Beru_Fjb	idemX3_0610142
Brigade to infotainment harness	0610604
Bumper_Harness_Acb	0600026
Bumper_Harness_Acb_Fog	0600025
Cable adapteur 120v Pour conducteur	0600090
Comp_Bitzer	idemMth_061482
Comp_Bock	IDEM VIP0610550
Destination_Sign_Emergency_Sw124	IdemX3_069944
Destination_Sign_Front_To_Side	IdemX3_069941
Destination_Sign_Interconn_Side_Rear	IdemX3_069942
Destination_Sign_Interconnection	IdemX3_069940
Destination_Sign_Rear	IdemX3_069943

DESCRIPTION	P9660
CHANGE ORDER	2018032
EFFECTIVE VEHICLE	R-1453
wiring revision	0
booster_positive_Harness	060692
Cablage__ASM	061180_JPEG
Dash	0600007
Docking Cornering Sw.	0610012 / 066613 (SAV)
Entrance_Door_Harness	0600013
SCR Cmpt Clearance lights Harness	0600031
DPF_Door_light	0600046
DPF_Volvo	060746
Driver_120VAC_Outlet	Idem X3_0610152
electric_horn	0600018
Electronic Mirrors Harness	0610486
Eng_Cradle_Allisson	0600115
Eng_Cradle_Ishift	0600121
Engine_Acc	0600120
Engine_chassis_GND	IdemX3_060306
ENGINE_DOOR	060748
Engine_Block_Heater_Harness	Idem X3_0610126
equilizer_harness_Vanner	060855
Evap_HARNESS_Ctrl	060804
Evap_Power_GND_harness	idemX3_060527
Evap_power_harness_	IdemX3_060529
FanDrive_harness	IdemX3_068820
FanDrive_pwr24	idemX3_069245
FanDrive_pwrGnd	idemX3_069246
FJB	0600000
AFSS Pro-Heat interface	0600089
FJB_TransAlisson	0600003
FJB_TransIShift	0600021
Flame_Detector_Ext_Harness	061046
Front_Clearance_Harness	0600011
Front_flip_screen	IdemX3_060099
Front_Harness	0600001
Front_Harness_Interface	0600123
Fuel_gauge_harness	idemX3_060087
Indiv_Headset_Radios_PWR	401420
Inter_Batt_cable	061036
Interior_Light_access	0600009
INVerter_120Vac_LH (Option 1 inverter)	0600150
INVerter_120Vac_LH (Option 2 inverter)	0600147
INVerter_120Vac_RH	0600096
24V_Inverter_harness	0600137
InverterJonctionNegatif	060819

DESCRIPTION	P9660
CHANGE ORDER	2018032
EFFECTIVE VEHICLE	R-1453
wiring revision	0
InverterJonctionNegatif2	061149
InverterJonctionPositif	060019
ISM_RELAY_Prack	0610200
JUMPER_120VAC_WCL	068937
Jumper_Y_120Vac	068221
Lavatory	060833
Led Pied conducteur	0600078
LH_CONSOLE	Cancel
LH_Console Alisson	0600003
LH_Console I_Shift	0600021
ENGINE_LINEAR_THERMAL_Harness	0610154
Linear_thermal_WO_afss	idemH3_069175
Lugg_Harness_H341	0610010
Lugg_Harness_H345	0600051
Outlet_120vac_PRack X3_Seul	0600131
ParcelRackJB	0600029
Plug_for_2_sliding_seats	067984
Plug_for_3_sliding_seats	068321
Pneumatic_Plate_harness	0600020
Power_harness_ 45pi	0600014
Power_harness_ 41pi	0600017
Power_RH_Splitter_harness	060654
Power_Steering_Ctrl	0600015
PowerVecr	060870
PreHeate_relay	060872
PreHeater_GND	idemX3_060308
Preheater_Thermal_harness	idemX3_067676
Preheater_ON_W_Batt_Charger	idemX3_060092
Preheater_ON_W_HVAC	idemX3_060093
ProHeat_Interface	idemX3_060228
ProHeat_Timer_Harness	060016
Proheat_To_RJB_harness	0610115
RadiatorChassisGnd	idemX3_069279
Radiator door harness	061153
Reading_Light_RH_Standard	0600041
Reading_Light_LH_Standard	0600040
Rear_wheel_sub_harness	0610473
Relay_Melco_batt	idemX3_069542
Resistor for speakers impedence matching	0600088
RHC_PowerHarness	0600006
RJB_ALISSON	0600023
RJB_Ctrl	0600085

DESCRIPTION	P9660
CHANGE ORDER	2018032
EFFECTIVE VEHICLE	R-1453
wiring revision	0
RJB_ISHIFT	0600024
Rear_clearence_harness	0600030
RH modesty panel AV	0610605
Roof_Haches_W_Fan	0600108
Service_Door_Harness	0600012
Sound_System_AuxHarness	062817
Sound_System_Harness	062799
Sound_System_Prack_Harness	063106
Sound_system_pwr_harness	0600083
SpherosTimerHarness	0600089
Starter_chassis_GND	idemX3_060307
starter_relay_Melco_VOLVO	060711
StarterBattery	060712
SubWofferExtHarness	idemH3_066743
TPMS_antennas	0600008
Trailer_Inputs_VEC_harness	060722
Trailer_Outputs_VEC_harness	060723
Trans_Fr_to_Rr_H345	0600010
TransSensorWithoutRetarder_harness	IDEMX3_0610588
TransSensorWithRetarder_harness	IDEMX3_0610586
Stairs_UpperSection_Harness	0600032
Stairs_LowerSection_Harness	0600033
Urea_Harness	0610590
USB_5V_Harness	IdemX3_060660
USB_Ipod_harness	idemX3_901349
Wall_LedStrip_Ext_WCL	0600044
WCL_IOE_Control	0600117
wcl_power_harness	060728
Wcl Ricon Access	IdemCOM069744
Wcl ricon lighting	061248
WCL_RICON_Lighting_Jumper	069065
WCL_Ricon_Window_Sw_Lh	0600048
WCL_Ricon_Window_Sw_RH	0600050
wcl_upperDoorControl	0600080
WclRiconSlidingDoor	069992
wifi_system_gnd	idemX3_069925
Win_Ajar_FJB	idemX3_060574
Win_ajar_window_side_LH	see 0600083
Win_ajar_window_side_RH	see 0600084
Win_ajar_window_Ricon_RH	060757
Windshield_Washer_Harness	0600019
Wind Ajar, Curb Lights and câblage système de son LH	0600083
Wind Ajar, Curb Lights RH	0600084

BREAKERS LIST

No	Location	Part #	Function	Rating	Page						
CB1	RJB	563708	24WUPFJB	90amp	3.1						
CB2	RJB	568113	12ECURJB&12VDFJB	70amp	3.1						
CB3	RJB	563708	HVACpassengers	90amp	3.1						
CB5	RJB	563708	24WUPRJB	90amp	3.1						
CB6	RJB	568113	24VDRJB&WCL	70amp	3.1						
CB8	RJB	563708	12WUPRJB	90amp	3.1						
CB9	RJB	563705	Urea	40amp	3.1						
CB10	RJB	568114	VECFPower	150amp	3.1						
CB11	RJB	568127	VSS	50amp	3.1						
CB12	RJB	563708	24VDInverter/Charger	90amp	3.1						
CB13	RJB	563708	24VDInverter/Charger	90amp	3.1						
CB14	FJB_VECF	564464	WiperSystem	20amp	4.3						
CB15	FJB_VECF	564464	MuxPower	20amp	4.3						
CB16	FJB_VECF	564464	MuxPower	20amp	4.3						
CB17	FJB_VECF	564464	MuxPower	20amp	4.3						
CB18	FJB_VECF	564464	MuxPower	20amp	4.3						
CB19	FJB_VECF	564464	MuxPower	20amp	4.3						
CB20	FJB_VECF	564464	DefrosterUnit	20amp	4.3						
CB21	FJB_VECF	564464	BreakerELD	20amp	4.3						
CB22	FJB_VECF	564464	VDS	20amp	4.3						
CB23	FJB_VECF	564464	BIO	20amp	4.3						
CB48	FJB_VECF	564464	Wipers	20amp	4.2						
CB128	RJB_VECR	564342	24VDFJB	30amp	5.1						
CB_DcDc	4rd_Lugg_Cmp	564238	Plasma	5amp	60.1						

CONNECTORS LIST

No	Location	Part #	Gender	No	Location	Part #	Gender
24SS_OP	Parcel_Rack_LH	563071	male	A36.JC	Front	562957	male
24SS_OP	Parcel_Rack_LH	563040	female	A36A.JA	Front	564325	male
24SS_OP_2	Parcel_Rack_LH	563071	male	A36A.JB	Front	562767	male
24SS_OP_2	Parcel_Rack_LH	563040	female	A39.P101	Parcel_Rack_LH	563201	male
A1	RJB	563975	male	A39.P901	Parcel_Rack_LH	563953	male
A2	FJB	563984	male	A50	P_Rack	563996	female
A5	Service_Cmpt	562428	female	A60.A	P_Rack	563071	male
A6	Engine_Cmpt	562427	male	A60.B	P_Rack	562706	female
A7	Rear_Axle_Cmpt	563979	male	A60.C	P_Rack	901110	male
A8.A	Dash	564698	male	A60.D	P_Rack	901110	male
A9.Cx1	FJB	564041	female	A60.E	P_Rack	560799	female
A9.Cx2	FJB	563678	male	A60.F	P_Rack	bidon	male
A9.Cx3	FJB	564037	female	A61.A	Parcel_Rack_LH	562464	male
A9.Cx4	FJB	564038	female	A61.B	Parcel_Rack_LH	562465	male
A10.X1	Engine_Cmpt	563135	male	A63	Roof	562090	male
A10.X3	Engine_Cmpt	563134	female	A65.A	Parcel_Rack_LH	563025	male
A11	Dash	563142	male	A65.B4	Parcel_Rack_LH	bidon	male
A12.A	DriverArea	564699	male	A65.B5	Parcel_Rack_LH	bidon	male
A14.A	Dash	562765	male	A65.B6	Parcel_Rack_LH	bidon	male
A14.B	Dash	562764	male	A65.D	Parcel_Rack_LH	bidon	male
A14.C	Dash	562767	male	A65.E	Parcel_Rack_LH	563071	male
A14.D	Dash	562766	male	A65.G1	Parcel_Rack_LH	563071	male
A15	Dash	562464	male	A65.G2	Parcel_Rack_LH	563071	male
A19	LH_Console	562878	female	A65.G3	Parcel_Rack_LH	563071	male
A20	FrontRoof	562465	male	A65.H1	Parcel_Rack_LH	561716	female
A21.A	Dash	564038	female	A65.H2	Parcel_Rack_LH	561716	female
A21.B	Dash	564700	male	A65.H3	Parcel_Rack_LH	561716	female
A22	Dash	564004	male	A65.J	Parcel_Rack_LH	562465	male
A23	P_Rack	564004	male	A69L.A	Parcel_Rack_LH	563025	male
A24	P_Rack	564004	male	A69L.B1	Parcel_Rack_LH	bidon	male
A25	Parcel_Rack_LH	563025	male	A69L.B2	Parcel_Rack_LH	bidon	male
A26.P1	Enginecmpt.	562350	male	A69L.B3	Parcel_Rack_LH	bidon	male
A26.P2	Enginecmpt.	563322	female	A69L.B4	Parcel_Rack_LH	bidon	male
A26.P4	Enginecmpt.	568088	male	A69L.C	Parcel_Rack_LH	bidon	male
A27	Service_Cmpt	562929	male	A69R.A	Parcel_Rack_RH	563025	male
A28	Service_Cmpt	562928	male	A69R.B1	Parcel_Rack_RH	bidon	male
A29	FJB	564004	male	A69R.B2	Parcel_Rack_RH	bidon	male
A31	P_Rack	564004	male	A69R.B3	Parcel_Rack_RH	bidon	male
A34.J	Enginecmpt.	568118	male	A69R.B4	Parcel_Rack_RH	bidon	male
A34.K	Enginecmpt.	564270	male	A69R.C	Parcel_Rack_RH	bidon	male
A34.L	Enginecmpt.	564269	male	A70a.A	Parcel_Rack	561540	female
A36.JA	Front	562767	male	A71	Dash	563884	male
A36.JB	Front	562765	male	A77	Parcelrack	564547	male

CONNECTORS LIST

No	Location	Part #	Gender	No	Location	Part #	Gender
A78	Parcelrack	562583	female	A121.Vsb	Dashboard	563678	male
A79	Parcelrack	562583	female	A121.Vsc	Dashboard	564037	male
A80	Parcelrack	562479	female	A121.Vsd	Dashboard	564118	male
A81.CN1	FJB	562767	male	A122.A	Parcel_Rack_LH	563960	male
A81.CN3A	FJB	564741	male	A122.B	Parcel_Rack_LH	563962	male
A81.CN3B	FJB	564742	male	A122.C1	Parcel_Rack_LH	563956	male
A83.A	FJB	565970	male	A122.C2	Parcel_Rack_LH	563957	male
A95.A	P_Rack	564489	female	A122.C3	Parcel_Rack_LH	563958	male
A95.B	P_Rack	562706	female	A123.A	Parcel_Rack_LH	563960	male
A95.C	P_Rack	562706	female	A123.B	Parcel_Rack_LH	563962	male
A96.A	Front	563678	male	A123.C1	Parcel_Rack_LH	563956	male
A96.B	Front	562795	male	A123.C2	Parcel_Rack_LH	563957	male
A97A	Front	563226	male	A123.C3	Parcel_Rack_LH	563958	male
A97A	Front	563613	female	A124.A	Parcel_Rack_LH	563960	male
A97B	Front	563226	male	A124.B	Parcel_rack	563962	male
A97B	Front	563613	female	A124.C1	Parcel_rack	563956	male
A97S.A1	Front	564401	male	A124.C2	Parcel_rack	563957	male
A97S.A2	Front	564402	male	A124.C3	Parcel_rack	563958	male
A97S.A3	Front	564403	male	A127	Dashboard	562957	male
A99	Dash	564205	male	A128	Dash	563878	male
A100	FrontAxelAnt	563515	male	A129	Parcel_Rack_LH	563878	male
A101	FrontAxelAnt	563515	male	A130	Driver_Area	563226	male
A102	FrontAxelAnt	563515	male	A131.A	Engine_Cmpt	561782	male
A107	EngineCmpt.	560336	male	A131.B	Engine_Cmpt	561781	female
A108	RJB	562766	male	A137A	Condensercmpt.	20429843	male
A109A	FJB	564141	male	A138	Cond_Cmpt	563787	male
A111	Lavatory	562550	female	A150	Modesty_LH	562957	male
A114A	Bumper	564252	male	A150LH	Modesty_LH	562957	male
A116	Dash	563872	female	A150RH	Modesty_RH	562957	male
A120.A	Dash	563960	male	A152.A	Parcelrack	561550	male
A120.B	Dash	563962	male	A152.B	Parcelrack	563071	male
A120.C1	Dash	563956	male	A152.C	Parcelrack	563071	male
A120.C2	Dash	563957	male	A152.D	Parcelrack	563071	male
A120.C3	Dash	563958	male	A152.E	Parcelrack	563071	male
A120.USB_COM	Dash	563878	male	A152.F	Parcelrack	563071	male
A120A.J1	Dashboard	563525	male	A152.G	Parcelrack	563071	male
A120A.J2	Dashboard	563526	female	A152.H	Parcelrack	563071	male
A120A.J3	Dashboard	563527	female	A152.I	Parcelrack	563071	male
A120A.USB	Dash	563878	male	A152.J	Parcelrack	563071	male
A120A.USB_COM	Dash	563878	male	A152.K	Parcelrack	562779	male
A121.B	Dash	bidon	male	A152.L	Parcelrack	562779	male
A121.USB	Dash	563878	male	A162.A	Front_Roof	561690	male
A121.Vsa	Dashboard	563679	male	A162.B	Front_Roof	561782	male

CONNECTORS LIST

No	Location	Part #	Gender	No	Location	Part #	Gender
A164.A	Front_Roof	561690	male	AE49.J3	RJB	565957	male
A164.B	Front_Roof	561782	male	AE50.J1	RJB	563679	male
A166	Front_Roof	561637	male	AE50.J2	RJB	564037	male
A614.A	P_RACK	561550	male	AE50.J3	RJB	565957	male
A614.C1	P_RACK	563071	male	AE51.J1	RJB	563679	male
A614.C2	P_RACK	563071	male	AE51.J2	RJB	564037	female
A614.C3	P_RACK	563071	male	AE51.J3	RJB	565957	male
A614.C4	P_RACK	563071	male	AE52.J1	RJB	563679	male
A614.C5	P_RACK	563071	male	AE52.J2	RJB	564037	female
A614.C6	P_RACK	563071	male	AE52.J3	RJB	565957	male
A614.I/O	Parcel_Rack	bidon	male	AE53.J1	RJB	563679	male
A614.P1	Parcel_Rack	562783	male	AE53.J2	RJB	564037	female
A614.P2	Parcel_Rack	562783	male	AE53.J3	RJB	565957	male
A614.P3	Parcel_Rack	562783	male	AE54.J1	Evaporatorcmpt.	563679	male
AE41.J1	FJB	563679	male	AE54.J2	Evaporatorcmpt.	564037	female
AE41.J2	FJB	564037	female	AE54.J3	Evaporatorcmpt.	565957	male
AE41.J3	FJB	564004	male	AE55.J1	Dash	563679	male
AE42.J1	FJB	563679	male	AE55.J2	Dash	564037	female
AE42.J2	FJB	564037	female	AE55.J3	Dash	564004	male
AE42.J3	FJB	564004	male	AE56.J1	Dash	563679	male
AE43.J1	FJB	563679	male	AE56.J2	Dash	564037	male
AE43.J2	FJB	564037	male	AE56.J3	Dash	564004	male
AE43.J3	FJB	565957	male	AE57.J1	WCLcmpt.	563679	male
AE44.J1	FJB	563679	male	AE57.J2	WCLcmpt.	564037	male
AE44.J2	FJB	564037	female	AE57.J3	WCLcmpt.	564004	male
AE44.J3	FJB	565957	male	AE58.J1	P_Rack	563679	male
AE45.J1	FJB	563679	male	AE58.J2	P_Rack	564037	male
AE45.J2	FJB	564037	female	AE58.J3	P_Rack	565957	male
AE45.J3	FJB	565957	male	Alt_LL.B	Engine_Cmpt	564410	female
AE46.J1	FJB	563679	male	Alt_UR.B	Engine_Cmpt	564469	female
AE46.J2	FJB	564037	female	AltLL.A	Enginecmpt.	563746	female
AE46.J3	FJB	565957	male	AltLL.B	Enginecmpt.	560815	female
AE47.J1	RH_console	563679	male	AltLL.C	Enginecmpt.	564469	female
AE47.J2	RH_console	564037	female	AltLR.A	enginecmpt.	563746	female
AE47.J3	RH_console	565957	male	AltLR.B	Enginecmpt.	560815	female
AE48.J1	RH_console	563679	male	AltLR.C	Enginecmpt.	564469	female
AE48.J2	RH_console	564037	female	AltUR.A	Enginecmpt.	563746	female
AE48.J3	RH_console	565957	male	AltUR.B	Enginecmpt.	560815	female
AE49.J1	RJB	563679	male	AltUR.C	Enginecmpt.	564469	female
AE49.J2	RJB	564037	male	B85	Engine_Cmpt	563815	male

CONNECTORS LIST

No	Location	Part #	Gender	No	Location	Part #	Gender
B96	Engine_Cmpt	563821	male	C16	RJB	561605	female
B96B	Engine_Cmpt	563823	male	C17	RJB	560195	male
B97	Engine_Cmpt	563816	male	C17	RJB	560169	female
B98	Engine_Cmpt	563817	male	C18	FJB	561986	male
B99	Engine_Cmpt	563815	male	C18	FJB	561987	female
B115A	Enginecmpt.	564226	male	C19	RJB	561986	male
B142C	Urea_Cmpt	563515	male	C19	RJB	561987	female
B310	Enginecmpt.	565967	male	C20A	Evap_Cmpt	562485	male
C1	FJB	563589	male	C20A	Evap_Cmpt	562486	female
C1	FJB	563590	female	C20B	Evap_Cmpt	562485	male
C1S	FJB	563589	male	C20B	Evap_Cmpt	562486	female
C1S	FJB	563590	female	C22	FJB	561986	male
C2	Service_Cmpt	563580	male	C22	FJB	561987	female
C2	Service_Cmpt	563581	female	C23	Evaporatorcmpt.	564034	male
C2A	FJB	563580	male	C23	Evaporatorcmpt.	564035	female
C2A	FJB	563581	female	C24_plug	Evap_Cmpt	561690	male
C2B	FJB	563580	male	C24_socket	Evap_Cmpt	561566	female
C2B	FJB	563581	female	C25	P_Rack	561734	male
C3_plug	RJB	563589	male	C25	P_Rack	561735	female
C3_socket	RJB	563590	female	C25A	P_Rack	561734	male
C3AP	FJB	563589	male	C25A	P_Rack	561735	female
C3AP	FJB	563590	female	C26	Ureacmpt.	563226	male
C3AS	FJB	563589	male	C26	Ureacmpt.	563613	female
C3AS	FJB	563590	female	C26A	Ureacmpt.	568110	male
C3S	RJB	563593	male	C26A	Ureacmpt.	568109	female
C3S	RJB	563590	female	C26B	Ureacmpt.	563227	male
C4	FJB	563580	male	C26B	Ureacmpt.	563614	female
C4	FJB	563581	female	C27	Front	563618	male
C5	FJB	563589	male	C27	Front	563616	female
C5	FJB	563590	female	C28	Dash	561986	male
C8	FJB	568112	male	C28	Dash	561987	female
C8	FJB	568111	female	C29	3rd_Lugg_Cmpt	563652	female
C9	RJB	561986	male	C29	4rd_Lugg_Cmpt	563651	male
C9	RJB	561987	female	C30	3rd_Lugg_Cmpt	561710	male
C10	Engine_Cmpt	562581	male	C30	3rd_Lugg_Cmpt	561709	female
C10	Engine_Cmpt	562583	female	C31W	Lugg_Cmpt	563227	male
C12	Engine_Cmpt	562581	male	C31W	Lugg_Cmpt	563614	female
C12	Engine_Cmpt	562583	female	C32	Lavatory	561734	male
C14	FJB	563580	male	C32	Lavtory	561735	female
C14	FJB	563581	female	C32W	Lugg_Cmpt	561734	male
C15A	Evaporatotcmpt.	568109	female	C32W	Lugg_Cmpt	561735	female
C15A	Evapotatorcmpt.	568110	male	C33	WCLcmpt.	564034	male
C16	RJB	561577	male	C33	WCLcmpt.	564035	female

CONNECTORS LIST

No	Location	Part #	Gender	No	Location	Part #	Gender
C34	Dash	561986	male	C59	RJB	561642	female
C34	Dash	561987	female	C63	Entrace_Door	562581	male
C35	Dash	561986	male	C63	Entrace_Door	562583	female
C35	Dash	561987	female	C64	Enginecmpt.	568110	male
C36	FJB	561986	male	C64	Enginecmpt.	568109	female
C36	FJB	561987	female	C66_plug	Evap_Cmpt	561577	male
C37	P_Rack	561986	male	C66_socket	Evap_Cmpt	561605	female
C37	P_Rack	561987	female	C71	FJB	561646	male
C38	P_Rack	561986	male	C87	Engine_Cmpt	562485	male
C38	P_Rack	561987	female	C87	Engine_Cmpt	562486	female
C38A	P_Rack	561515	male	C88	WCL_Cmpt.	563226	male
C38A	P_Rack	561552	female	C88	WCL_Cmpt.	563613	female
C39	Parcelrack	562503	male	C90	RJB	563582	male
C39	Parcelrack	562507	female	C90	RJB	563583	female
C39A	Firesuppressioncmpt.	561782	male	C91	RJB	562285	male
C39A	Firesuppressioncmpt.	561781	female	C91	RJB	562282	female
C40W	P_Rack	561515	male	C94	FJB	563589	male
C40W	P_Rack	561552	female	C99	Enginecmpt.	562581	male
C41	RJB	561782	male	C99	Enginecmpt.	562583	female
C41	RJB	561781	female	C100	Evaporatorcmpt.	562477	male
C42	Front	562285	male	C100	Evaporatorcmpt.	562479	female
C42	Front	562282	female	C100S	Evaporator_Cmpt.	562477	male
C43	Front	562581	male	C100S	Evaporator_Cmpt.	562479	female
C43	Front	562583	female	C107A	Enginecmpt.	562885	female
C44_plug	FJB	561577	male	C107A	Enginecmpt.	562884	female
C44_socket	FJB	561605	female	C107B	Enginecmpt.	562885	female
C45	Front	561646	male	C107B	Enginecmpt.	562884	female
C45	Front	561645	female	C107C	Enginecmpt.	562885	female
C46	3rdlugg.cmpt.	562549	male	C107C	Enginecmpt.	562884	female
C46	3rdlugg.cmpt.	562550	female	C110	Dash	568110	male
C47	FJB	565207	male	C110	Dash	568109	female
C48	RJB	565208	male	C119A	Rear_engine_door	568110	male
C49	FJB	562005	male	C119A	Rear_engine_door	568109	female
C49	FJB	561714	female	C129	Dashboard	562464	male
C54	Engine_Cmpt.	563226	male	C129	Dashboard	565871	female
C54	Engine_Cmpt.	563613	female	C131A	Engine_Cmpt	561782	male
C54A	Ureacmpt.	568110	male	C131A	Engine_Cmpt	561781	female
C54A	Ureacmpt.	568109	female	C131B	Engine_Cmpt	561782	male
C54B	Engine_Cmpt.	562477	male	C131B	Engine_Cmpt	561781	female
C54B	Engine_Cmpt.	562479	female	C150	Modesty_LH	562957	male
C55	Evap_Cmpt	561577	male	C150	Modesty_LH	564406	female
C55	Evap_Cmpt	561605	female	C152	Cond_Cmpt	561611	male
C59	RJB	561643	male	C152	Cond_Cmpt	561610	female

CONNECTORS LIST

No	Location	Part #	Gender	No	Location	Part #	Gender
C173	Modesty_LH	563040	female	C769	Parcel_Rack	901062	male
C193_plug	RJB	563589	male	C769	Parcel_Rack	901283	female
C193_socket	RJB	563590	female	C777	Dashboard	562581	male
C194	FJB	563589	male	C777	Dashboard	562583	female
C194	FJB	563590	female	C_A69R	Parcel_Rack	563025	male
C222	FJB	562477	male	C_Audio_HDMI_L	Parcel_Rack	901062	male
C222	FJB	562479	female	C_Audio_HDMI_L	Parcel_Rack	901283	female
C279	Service_Cmpt	562479	female	C_Audio_HDMI_R	Parcel_Rack	901062	male
C355	RJB	563582	male	C_Audio_HDMI_R	Parcel_Rack	901283	female
C355	RJB	565887	female	C_AUX	Parcelrack	563071	male
C380A	Dash	564222	male	C_AUX	Parcelrack	563040	female
C380A	Dash	564224	female	C_LineOut	Parcelrack	563962	male
C381	Parcel_Rack	561847	male	C_LineOut	Parcelrack	564489	female
C382	Under_Seat	561580	male	C_Mo9	Evap_Cmpt	561577	male
C382	Under_Seat	561582	female	C_Mo9	Evap_Cmpt	561605	female
C397	RJB	562285	male	CCAN1	FJB	562650	male
C397	RJB	562282	female	CCAN1	FJB	562649	female
C463	Rearaxlecmpt.	568111	male	CCAN2	FJB	562650	male
C463	Rearaxlecmpt.	568112	female	CCAN2	FJB	562649	female
C464	FJB	564222	male	CCAN3	FJB	562650	male
C464	FJB	564224	female	CCAN3	FJB	562649	female
C464A	Dash	564222	male	CCAN4	FJB	562650	male
C464A	Dash	564224	female	CCAN4	FJB	562649	female
C464B	FJB	564222	male	CCust	RJB	562477	male
C464B	FJB	564224	female	CCust	RJB	562479	female
C465	Parcelrack	562581	male	CFHPR1	Parcelrack	564560	male
C465	Parcelrack	562583	female	CP1	Passenger_Area	561782	male
C542	Parcelrack	561550	male	CP1	Passenger_Area	561781	female
C542	Parcelrack	561667	female	CP2	Passenger_Area	561782	male
C543	LH_Parcel_Rack	561607	male	CP2	Passenger_Area	561781	female
C543	LH_Parcel_Rack	561606	female	CP3	Passengersarea	561782	male
C564	Parcelrack	562503	male	CP3	Passengersarea	561781	female
C564	Parcelrack	562507	female	CP4	Passenger_Area	561782	male
C566	Parcelrack	562503	male	CP4	Passenger_Area	561781	female
C566	Parcelrack	562507	female	CP5	Passenger_Area	561782	male
C567	Parcelrack	562503	male	CP5	Passenger_Area	561781	female
C567	Parcelrack	562507	female	CSX1	Engine_Cmpt	563135	male
C614	Passenger_Area	563071	male	CSX1	Engine_Cmpt	563134	female
C614	Passenger_Area	563040	female	CSX3	Engine_Cmpt	563135	male
C615	Passenger_Area	563071	male	CSX3	Engine_Cmpt	563134	female
C615	Passenger_Area	563040	female	CT_IN	Rear_Vehicle	560167	male
C768	Parcel_Rack	901062	male	CT_IN	Rear_Vehicle	560159	female
C768	Parcel_Rack	901283	female	CT_Out	Rear_Vehicle	560233	female

CONNECTORS LIST

No	Location	Part #	Gender	No	Location	Part #	Gender
EI	Enginecmpt.	563739	male	L72	Rear_Vehicle	562155	male
L1A	Enginecmpt.	560774	male	L74	Rear_Vehicle	562155	male
L16.A	Frontroof	562615	female	L75	Rearenginedoor	562155	male
L16.B	Frontroof	562615	female	L76	Rear_engine_door	562155	male
L17.A	Frontroof	562615	female	L81.A	Rear_Vehicle	562835	female
L17.B	Frontroof	562615	female	L81.B	Rear_Vehicle	562834	male
L18	Entrance_Door	563590	female	L82A	Rearvehicule	562348	female
L21	Upper_front	560605	female	L83A	Rearvehicule	562348	female
L22	Upper_front	560605	female	L84	Rear_roof	560605	female
L23	Upper_front	560605	female	L85	Rear_roof	560605	female
L24	Upper_front	560605	female	L86	Rear_roof	560605	female
L25	Upper_front	560605	female	L87	Rear_roof	560605	female
L26	Upper_front	560605	female	L88	Rear_roof	560605	female
L27	Upper_front	560605	female	L89	Rear_roof	560605	female
L52	Parcelrack	560898	male	L90	Rear_roof	560605	female
L52	Parcelrack	560900	female	L93.B	Engine_Cmpt.	563069	female
L52A	Parcelrack	560898	male	L94.B	Engine_Cmpt.	563069	female
L53	Parcelrack	560898	male	L95	Outside_Front_LH	562485	male
L53	Parcelrack	560900	female	L95A	Outside_Front_LH	562485	male
L53A	Parcelrack	560898	male	L96	Outside_Front_RH	562485	male
L54	Parcelrack	560898	male	L96A	Outside_Front_RH	562485	male
L54	Parcelrack	560900	female	L140	Lavatory	561247	male
L54A	Parcelrack	560898	male	L142	Lavatory	562006	female
L55	Parcelrack	560898	male	L172RH	Modesty_RH	564719	male
L55	Parcelrack	560900	female	L173	Parcelrack	563590	female
L55A	Parcelrack	560898	male	L174A	Parcelrack	563590	female
L56	Parcelrack	560898	male	L175	Engine_Cmpt.	563590	female
L56	Parcelrack	560900	female	L176	5th_Lugg_Cmpt	561247	male
L56A	Parcelrack	560898	male	L177	5th_Lugg_Cmpt	561247	male
L57	Parcelrack	560898	male	L178	3rd_Lugg_Cmpt	561247	male
L57	Parcelrack	560900	female	L179	3rd_Lugg_Cmpt	561247	male
L57A	Parcelrack	560898	male	L180	2nd_Lugg_Cmpt	561247	male
L58	Parcelrack	560898	male	L181	2nd_Lugg_Cmpt	561247	male
L58	Parcelrack	560900	female	L182	1st_Lugg_Cmpt	561247	male
L58A	Parcelrack	560898	male	L183	1st_Lugg_Cmpt	561247	male
L63	Front_Side_LH	562155	male	L184	Servicecmpt.	561247	male
L64	Outside_Front_RH	562155	male	L185.A	Servicecmpt.	561539	male
L65	Outside_Front_LH	562155	male	L185.B	Servicecmpt.	561539	male
L66	Out_Side_Front_LH	562155	male	L186.A	Dash	561539	male
L67	4th_Lugg_Cmpt	562155	male	L186.B	Dash	561539	male
L68	4th_Lugg_Cmpt	562155	male	L187	Engine_Cmpt	561690	male
L69	4th_Lugg_Cmpt	562155	male	L188	Service_Cmpt	562486	female
L70	4th_Lugg_Cmpt	562155	male	L199	Enginecmpt.	562848	male

CONNECTORS LIST

No	Location	Part #	Gender	No	Location	Part #	Gender
L204	Parcel_Rack_RH	562803	male	R3	RJB	563409	male
L205	Enginecmpt.	562485	male	R4	FJB	564496	male
L206	Parcel_Rack_RH	562803	male	R12	Evap_Cmpt	563409	male
L282	Engine_Cmpt	561690	male	R16	RJB	564496	male
L285.A	Rear_Vehicle	562835	female	R20	RJB	564496	male
L285.B	Rear_Vehicle	562834	male	R26	Evap_Cmpt	564496	male
L286.A	Rear_Vehicle	562835	female	R29	RJB	563409	male
L286.B	Rear_Vehicle	562834	male	R30	FJB	564496	male
L290	Engine_door	562565	female	R31	FJB	564496	male
L291	Engine_door	562565	female	R34	RJB	564210	male
L298A	Enginecmpt.	563590	female	R36	Dash	564496	male
L306	RJBcmpt.	561247	male	R37	Dash	564496	male
L319	Under_WCL_platform	561247	male	R38	FJB	564496	male
L350A.A	Rearaxlecmpt.	564552	male	R40	RJB	564496	male
L350A.B	Rearaxlecmpt.	563340	male	R47	Parcelrack	564496	male
Mic_Driver_1.A	Parcel_rack	560999	male	R_12VISS	Parcel_rack	564496	male
Mic_Driver_2.A	Parcel_rack	560999	male	Res3.A	RJB	563590	female
Mic_Guide_1.A	Parcel_rack	560999	male	Res4	FJB	563590	female
Mic_Guide_3.A	Parcel_rack	560999	male	Res6	FJB	563590	female
Mo12	Engine_Cmpt	561690	male	Res6A	FJB	563589	male
Mo13	Engine_Cmpt	561690	female	Res6A	FJB	563590	female
Mo14	Engine_Cmpt	561566	female	Res6B	FJB	563589	male
Mo15	Front_Ceiling	563517	female	Res6B	FJB	563590	female
Mo16	Front_Ceiling	563517	female	Res15	Engine_Cmpt	561782	male
Mo17	RH_Console	562350	male	Res7	Engine_Cmpt	563590	female
Mo65	Enginecmpt.	568089	male	Res31	Ureacmpt.	562350	male
Mo67	Enginecmpt.	568089	male	Res32	Ureacmpt.	563764	female
Mo68	Enginecmpt.	568089	male	Se13	Engine_Cmpt	562350	male
Mo69	Enginecmpt.	568089	male	Se14.A	Driver_Area	561782	male
Mo70	Enginecmpt.	568089	male	Se14.B	Driver_Area	561781	female
Mo71	Enginecmpt.	568089	male	Se18	Servicecmpt.	561566	female
Mo72	Enginecmpt.	568089	male	Se19_P	Service_Cmpt	563677	male
Mo73	Enginecmpt.	568089	male	Se19_S	Service_Cmpt	563677	male
PC1	FJB	562650	male	Se23	Engine_Cmpt	563159	male
PC1	FJB	562649	female	Se24	Evap_Cmpt	563758	female
PF	FJB	561782	male	Se25	Passenger_Area	561248	female
PF	FJB	561781	female	Se28	Pneumatic_plate	561690	male
PF1	Passenger_Area	561782	male	Se29	Engine_Cmpt	561566	female
PF1	Passenger_Area	561781	female	Se30	Enginedoor	562877	female
PR	Parcelrack	561782	male	Se31	Enginedoor	562877	female
PR	Parcelrack	561781	female	Se32	Rear_Axle_Cmpt	562426	male
PR1	Passenger_Area	561782	male	Se33	Rear_Axle_Cmpt	562856	male
PR1	Passenger_Area	561781	female	Se35	Rear_Axle_Cmpt	562426	male

CONNECTORS LIST

No	Location	Part #	Gender	No	Location	Part #	Gender
Se36	Rear_Axle_Cmpt	562427	male	spBar13	Enginecmpt.	564135	male
Se37	Front_Axle_LH	641132	female	spBar14	Enginecmpt.	564135	male
Se38	Front_Axle_RH	641132	female	spBar15	Enginecmpt.	564135	male
Se39	Rear_Axle_LH	641132	female	spBar16	Enginecmpt.	564135	male
Se40	Rear_Axle_LH	641132	female	spBar19	Condensorcmpt.	564135	male
Se41	Condensor_cmpt.	562877	female	spBar20	Condensorcmpt.	564135	male
Se46	Rearaxlecmpt.	562348	female	spBar21	Condensorcmpt.	564135	male
Se63	Rearaxlecmpt.	641132	female	spBar22	Enginecmpt.	564135	male
Se64	Rearaxlecmpt.	641132	female	spBar23	Enginecmpt.	564135	male
Se65	Dash	564042	female	spBar24	Enginecmpt.	564135	male
Se66	FJB	564039	female	SpkDr_L	Parcel_Rack_LH	563994	male
Se67	Frontaxlecmpt.	563159	female	SpkDr_R	Parcel_Rack_RH	563994	male
Se69	Frontaxlecmpt.	563159	female	Sub1.A	Passenger_Area	564004	female
Se74	Rear_Axle_Cmpt	563340	male	Sub2.A	Passenger_Area	564004	female
Se79	Front_Axle	563340	male	Sw10A	Dash	563498	male
Se100	WCLdoor	562479	female	Sw12	Dash	563498	female
So7	Service_Cmpt	561690	male	Sw14	Dash	563498	male
So8	Servicecmpt.	641385	male	Sw16	Dash	563498	male
So9	Enginecmpt.	560016	female	Sw17	Dash	563498	male
So10	Cond_Cmpt	562485	male	Sw18A	Dash	563498	male
So11	Cond_Cmpt	561566	female	Sw20	Dash	563498	male
So13	Evap_Cmpt	563204	female	Sw23	Dash	563498	female
So14	Servicecmpt.	641385	male	Sw24	Dash	563498	male
So15	Servicecmpt.	641385	male	Sw25	Dash	563498	male
So16	Servicecmpt.	641385	male	Sw26	Dash	563498	female
So17	Servicecmpt.	562848	male	Sw27	Dash	563498	male
So20	Servicecmpt.	641385	male	Sw29	Dash	563498	male
So21	Front_Axle_Cmpt	564046	female	Sw30	Dash	563135	male
So22	Front_Axle_Cmpt	564046	female	Sw32	Dash	561477	female
So23	Rear_Axle_Cmpt	564046	female	Sw33	Dash	561476	male
So24	Rear_Axle_Cmpt	564046	female	Sw34	Outside_Front_RH	562477	male
So27	Rearaxlecmpt.	564045	female	Sw37	Dash	563498	male
So50	Rearaxlecmpt.	564046	female	Sw38	Dash	563498	male
So51	Rearaxlecmpt.	641385	male	Sw39.A	RJB	562403	female
So52	Rearaxlecmpt.	564045	female	Sw39.B	RJB	562403	female
So53	Rearaxlecmpt.	641385	male	Sw40	LH_Console	561690	male
So54	Enginecmpt.	564045	female	Sw41	LH_Console	562749	male
spBar4	Enginecmpt.	564135	male	Sw42	Lugg_Cmpt	561636	female
spBar5	Enginecmpt.	564135	male	Sw43	Lugg_Cmpt	563498	female
spBar6	Enginecmpt.	564135	male	Sw44.A	Lugg_Cmpt	562485	male
spBar7	Enginecmpt.	564135	male	Sw44.B	Lugg_Cmpt	562486	female
spBar11	Engine_Cmpt.	564135	male	Sw45.A	5th_Lugg_Cmpt	562485	male
spBar12	Engine_Cmpt.	564135	male	Sw45.B	5th_Lugg_Cmpt	562486	female

CONNECTORS LIST

No	Location	Part #	Gender	No	Location	Part #	Gender
Sw46.A	5th_Lugg_Cmpt	562485	male	VECF11	FJB	563184	male
Sw46.B	5th_Lugg_Cmpt	562486	female	VECF12	FJB	563187	male
Sw47.A	3rd_Lugg_Cmpt	562485	male	VECR1	RJB	563186	male
Sw47.B	3rd_Lugg_Cmpt	562486	female	VECR2	RJB	563183	male
Sw48.A	3rd_Lugg_Cmpt	562485	male	VECR3	RJB	563185	male
Sw48.B	3rd_Lugg_Cmpt	562486	female	VECR4	RJB	563182	male
Sw49.A	2nd_Lugg_Cmpt	562485	male	VECR9	RJB	563448	male
Sw49.B	2nd_Lugg_Cmpt	562486	female	VECR10	RJB	563181	male
Sw50.A	2nd_Lugg_Cmpt	562485	male	VECR11	RJB	563184	male
Sw50.B	2nd_Lugg_Cmpt	562486	female	VECR12	RJB	563187	male
Sw51.A	1st_Lugg_Cmpt	562485	male	VECT3	Rear_vehicule	563718	male
Sw51.B	1st_Lugg_Cmpt	562486	female	VECT4	Rear_vehicule	563714	male
Sw52.A	1st_Lugg_Cmpt	562485	male	Y80	Engine_Cmpt	563789	male
Sw52.B	1st_Lugg_Cmpt	562486	female	Y81	Cond_Cmpt	563793	male
Sw55.A	Lavatory	560488	female				
Sw55.B	Lavatory	560488	female				
Sw56.A	Lavatory	560488	female				
Sw56.B	Lavatory	560488	female				
Sw58	Engine_Cmpt.	563135	male				
Sw59	Enginecmpt.	563135	male				
Sw64	RJB	563498	male				
Sw82	RJB	563135	male				
Sw83	RJB	564699	male				
Sw85	LH_Console	562749	male				
Sw95.A	WCLdoor	562615	female				
Sw95.B	WCLdoor	562615	female				
Sw95.C	WCLdoor	562615	female				
Sw96.A	WCL_Door	562615	female				
Sw96.B	WCL_Door	562615	female				
Sw96.C	WCLdoor	562615	female				
Sw97.A	WCLsystem	562615	female				
Sw97.B	WCLsystem	562615	female				
Sw97.C	WCLsystem	562615	female				
Sw98.A	WCLsystem	562615	female				
Sw98.B	WCLsystem	562615	female				
Sw98.C	WCLsystem	562615	female				
Sw152	Driver_Area	562471	male				
VECF1	FJB	563186	male				
VECF2	FJB	563183	male				
VECF3	FJB	563185	male				
VECF4	FJB	563182	male				
VECF9	FJB	563448	male				
VECF10	FJB	563181	male				

DIODES LIST

No	Location	Part #	Function	Page					
D1	FJB	561740	Accessoriesdiode	3.2					
D2	FJB	561740	Driverliquidsolenoiddiode	18.1					
D6	RJB	561740	FlybackdiodeMasterrelay	3.1					
D7	RH_Console	561740	Entracedoordiode	29.1					
D8	Evap_Cmpt	561740	Parcelrackliquidsolenoiddiode	18.3					
D9	Evap_Cmpt	561740	HVACdiode	17.1					
D10	Evap_Cmpt	561740	Pre-Heatdiode	17.1					
D11	Evap_Cmpt	561740	Passengersliquidsolenoiddiode	18.2					
D12	FJB	565973	Hornwhilefireextinguisherdiode	9.1					
D13	FJB	561740	Frontclearancelightsdiode	26.1					
D14	FJB	561740	FireExtinguisher	9.1					
D18	FJB	561740	5thluggagecompartementlightingdiode	25.1					
D29	RJB	561740	FlybackdiodeUnloader	18.2					
D30	Evap_Cmpt	561740	FlybackdiodeWaterpump	18.2					
D31	RJB	561740	FlybackdiodeA/Cclutch	18.2					
D32	Engine_Cmpt	561740	FlybackdiodeAirexhaust	11.1					
D33	RJB	561740	FlybackdiodeFlushingpump	11.1					
D41	FJB	561740	Avoidvoltagebackfeed	3.2					
D43	FJB	561740	Avoidvoltagebackfeed	3.2					
D44	FJB	561740	Ignitiondiode	3.2					
D60	RJB	560931	Offshoreheatingsystem	17.1					
D62.	Rear_Roof	561740	PeakRevdiode	18.5					
D63.	Rear_Roof	561740	PeakRevdiode	18.5					
D73	Evap_Cmpt	561740	Evaporatorrelaydiode	18.2					
D80	Evap_Cmpt	561740	Cutoffwaterpreheaterdiode	38.1					

RESISTORS LIST

No	Location	Part #	Function	Page					
Res1	Front_Service_Pane	563593	TPMS	39.1					
Res2	Dashboard	563205	PullDownResistor	18.1					
Res3	RJB	563593	EndoflineresistanceBBUSnetwork120ohms4W	6.1					
Res4	FJB	563593	EndoflineresistanceBBUS1	6.1					
Res6	FJB	563593	EndoflineresistanceDBUSnetwork120ohms4W	6.2					
Res7	FJB	563593	EndoflineresistanceDBUSnetwork120ohms4W	6.2					
Res8	ParcelRack	563205	PullDownPrackFan	18.3					
Res9	Dashboard	563205	PullDownResistor	18.1					
Res10	Dashboard	563205	PullDownResistor	18.1					
Res11	RJB	563205	PullDownRes	4.2					
Res12	Dashboard	562498	ReduceMirrorSpeedResistor	31.1					
Res13	Dashboard	562498	ReduceMirrorSpeedResistor	31.1					
Res14	RJB	563205	Evaporatorfans620ohms2W	18.2					
Res15	Engine_Cmpt	563587	EndoflineresistanceFlamedetec.device10kohms	38.1					
Res16	FJB	563593	EndoflineresistanceDBUSnetwork120ohms4W	6.1					
Res17	FJB	563593	EndoflineresistanceDBUSnetwork120ohms4W	6.1					
Res21	RJB	563205	RJBcompartementlights620ohms2W	25.1					
Res22	RJB	563205	Luggagecmpt.lighting620ohms2W	25.1					
Res31	Cmpt_fuel_tank	41123	Ureatankheatingelement(Heatedhose)	14.2					
Res32	Cmpt_fuel_tank	41123	Ureatankheatingelement(Heatedhose)	14.2					
Res53	FJB	563593	EndoflineresistanceDBUSnetwork120ohms4W	6.2					
Res99	Dashboard	563593	CANNetwork	42.4					

RELAYS LIST

No	Location	Part #	Function	Page					
R1	RJB	560843	MasterRelay	3.1					
R3	RJB	563348	12vIgnition&Accessories	3.1					
R4	FJB	563332	Cutoffwaterpreheater	38.1					
R6	Front_Service_Panel	563269	EntDoorOpenRly	29.1					
R7	Front_Service_Panel	563269	EntDoorCloseRly	29.1					
R8	Front_Service_Panel	563269	Spare	4.3					
R9	Front_Service_Panel	563269	Spare	4.3					
R10	Front_Service_Panel	563269	Spare	4.3					
R12	Evap_cmpt.	563348	Evaporator	18.2					
R16	RJB	563332	MaxTempRly	17.1					
R20	RJB	563332	WaterPump	17.1					
R21	FJB	560493	IgnitionRelay	3.2					
R22	FJB_VECF	563269	EcuIgnition	4.1					
R23	FJB_VECF	563269	Shutdown	4.1					
R24	FJB_VECF	563269	EcuIShift	4.1					
R25	FJB_VECF	563269	24VIgnition	4.2					
R26	Evap_Cmpt	563332	Pre-Heat	18.2					
R29	RJB	563348	PreheaterVolvo	14.1					
R30	RJB	563269	12vEnginerunning	4.1					
R31	RJB	563332	12vIgnition	4.1					
R34	RJB	564218	12vRrEngineEcu	3.2					
R35	RJB	564218	24VRrVECUPwr	3.2					
R36	RJB	563269	FireExtinguisher	9.1					
R37	RJB	563269	Electrichorn	9.1					
R38	RJB	563269	USB/Outlet	30.2					
R40	RJB	563332	TransmissionIShift	15.2					
R45	RJB	564774	RlyChargerConnected	40.1					
R47	WCLPump	563332	WCLDoorOpenOption	36.1					
R52	RJB_VECT	563270	Clearancelights&sidemarkers	26.4					
R53	RJB_VECT	563270	Flashersleftside	26.4					
R54	RJB_VECT	563270	Brakelights	26.4					
R55	RJB_VECT	563270	Flashersrightside	26.4					
R56	RJB_VECT	563270	Tail&licencelights	26.4					
R210	Parcel_Rack_LH	560493	24vRelayLatching	5.2					
R300	Parcel_Rack_LH_1st_Cmpt	563332	BackUpCam	28.1					
R_12VISS	Parcel_Rack_LH_1st_Cmpt	563332	SoundSystem	35.6					
R_Starter	RJB	564095	StarterRelayControl	3.2					
R23A	RJB	563332	12VIgnition	4.1					

FUSES LIST

No	Location	Part #	Function	Rating	Page
F4	FuseBoxFJB	563280	TransIShift	5amp	4.2
F10	FuseBoxFJB	563280	Networks	Cluster	lights
F11	FuseBoxFJB	563282	Horn	20amp	4.1
F12	FuseBoxFJB	563284	Spare	15amp	4.1
F13	FuseBoxFJB	563284	12VDCustomer	15amp	4.1
F14	FuseBoxFJB	563135	Spare	30amp	4.1
F15	FuseBoxFJB	563280	VLink_Gateway	5amp	4.1
F16	FuseBoxFJB	563284	12VEng.run	15amp	4.1
F17	FuseBoxFJB	563165	Multiplexpower	30amp	4.1
F18	FuseBoxFJB	563165	Multiplexpower	30amp	4.1
F19	FuseBoxFJB	563165	Multiplexpower	30amp	4.1
F20	FuseBoxFJB	563280	Multiplexpower	5amp	4.1
F21	FuseBoxFJB	563165	Multiplexpower	30amp	4.1
F22	FuseBoxFJB	563280	ELD	5amp	4.1
F23	FuseBoxFJB	563165	ESP	30amp	4.1
F24	FuseBoxFJB	563284	12VIgn	15amp	4.1
F25	FuseBoxFJB	563284	12Voutlets	15amp	4.1
F26	FuseBoxFJB	563284	Spare	15amp	4.1
F27	FuseBoxFJB	563165	Spare	30amp	4.1
F29	FuseBoxFJB	563283	Networks	10amp	4.1
F30	FuseBoxFJB	563280	Networks	5amp	4.1
F33	FuseBoxFJB	563280	Multiplexpower	5amp	4.2
F34	FuseBoxFJB	563280	Multiplexpower	5amp	4.2
F35	FuseBoxFJB	563280	Multiplexpower	5amp	4.2
F36	FuseBoxFJB	563280	Startswitch	5amp	4.2
F37	FuseBoxFJB	563280	Haz/ExtDoorSw	5amp	4.2
F39	FuseBoxFJB	563284	24VD	15amp	4.2
F40	FuseBoxFJB	563284	Firesuppression	15amp	4.2
F41	FuseBoxFJB	563280	Spare	5amp	4.2
F42	FuseBoxFJB	563283	TransmissionIShift	10amp	4.1
F43	FuseBoxFJB	563282	TransmissionIShift	20amp	4.1
F44	FuseBoxFJB	563165	Multiplexpower	30amp	4.2
F45	FuseBoxFJB	563165	Multiplexpower	30amp	4.2
F46	FuseBoxFJB	563280	Multiplexpower	5amp	4.2
F47	FuseBoxFJB	563280	Multiplexpower	5amp	4.2
F50	FuseBoxFJB	563165	HVACdefroster	30amp	4.2
F51	FuseBoxFJB	563280	Destinationsigns	5amp	4.2
F52	FuseBoxFJB	563280	FMSGW	5amp	4.2
F53	FuseBoxFJB	563283	Clock&VSS	10amp	4.2
F54	FuseBoxFJB	563283	ElectronicMirror	10amp	4.2
F55	FuseBoxFJB	563283	B-UpCam	10amp	4.2
F56	FuseBoxFJB	563284	Spare	15amp	4.2
F57	FuseBoxFJB	563283	Spare	10amp	4.2

FUSES LIST

No	Location	Part #	Function	Rating	Page
F58	FuseBoxFJB	563284	Spare	15amp	4.2
F73	FuseBoxRJB	563283	EngineECUVolvo	20amp	5.1
F90	FuseBoxRJB	563282	Ureasystem	20amp	5.1
F91	FuseBoxRJB	563282	EngineECUVolvo	20amp	5.1
F95	FuseBoxFJB	563280	FMSGWIGN	5amp	4.2
F96	FuseBoxRJB	563280	*opt*	5amp	5.1
F99	FuseBoxRJB	563165	EngineECUVolvo	30amp	5.1
F100	FuseBoxRJB	563283	EngineECUVolvo	10amp	5.1
F101	FuseBoxRJB	564520	PowerforMasterrelay	300Amp	3.1
F105	FuseBoxRJB	563282	Spare	20amp	5.1
F106	FuseBoxRJB	563153	Multiplexpower	30amp	5.1
F107	FuseBoxRJB	563153	Multiplexpower	30amp	5.1
F108	FuseBoxRJB	563280	Networks	5amp	5.1
F109	FuseBoxRJB	563280	Engine&RJBcmpt.lights	5amp	5.1
F110	FuseBoxRJB	563283	TransmissionAlisson	10amp	5.1
F112	FuseBoxRJB	563165	Trailer	30amp	5.1
F113	FuseBoxRJB	563283	Spare	10amp	5.1
F114	FuseBoxRJB	563284	Spare	15amp	5.1
F115	FuseBoxRJB	563283	Spare	10amp	5.1
F116	FuseBoxRJB	563284	Spare	15amp	5.1
F117	FuseBoxRJB	563283	Spare	10amp	5.1
F118	FuseBoxRJB	563284	Spare	15amp	5.1
F119	FuseBoxRJB	563283	Spare	10amp	5.1
F120	FuseBoxRJB	563284	Spare	15amp	5.1
F121	FuseBoxRJB	563284	Powerforcustomer	15amp	5.1
F122	FuseBoxRJB	563283	Equalizer	10amp	5.1
F123	FuseBoxRJB	563153	Pre-heat	25amp	5.1
F124	FuseBoxRJB	563153	Pre-heat	25amp	5.1
F126	FuseBoxRJB	563280	EngineECU&HVAC	5amp	5.1
F127	FuseBoxRJB	563284	Pre-heat	15amp	5.1
F129	FuseBoxRJB	563284	Spare	15amp	5.1
F130	FuseBoxRJB	563284	Spare	15amp	5.1
F131	FuseBoxRJB	563280	Powerforcustomer	5amp	5.1
F132	FuseBoxRJB	563280	A57Pwr	5amp	5.1
F133	FuseBoxRJB	563165	A49Pwr	30amp	5.1
F134	FuseBoxRJB	563165	A52Pwr	30amp	5.1
F135	FuseBoxRJB	563165	A54Pwr	30amp	5.1
F136	FuseBoxRJB	563165	A53Pwr	30amp	5.1
F137	FuseBoxRJB	563280	Spare	5amp	5.1
F138	FuseBoxRJB	563280	Readinglamps&chime	5amp	5.1
F139	FuseBoxRJB	563283	Alternators	10amp	5.1
F140	FuseBoxRJB	563283	Spare	10amp	5.1
F141	FuseBoxRJB	563284	CondMo7	20amp	5.1

FUSES LIST

No	Location	Part #	Function	Rating	Page
F142	FuseBoxRJB	563284	CondMo8	20amp	5.1
F143	FuseBoxRJB	563284	CondMo27	20amp	5.1
F144	FuseBoxRJB	563284	CondMo28	20amp	5.1
F145	FuseBoxRJB	563153	P.Rack_Fan	25amp	5.1
F146	FuseBoxRJB	563283	Spare	10amp	5.1
F147	FuseBoxRJB	563284	24WUPCust	15amp	5.1
F148	FuseBoxRJB	563165	12VSoundSyst	30amp	5.1
F149	FuseBoxRJB	563282	UreaSystem	20amp	5.1
F150	FuseBoxRJB	563283	SpareVECR	10amp	5.1
F151	FuseBoxRJB	563284	Spare	15amp	5.1
F152	FuseBoxRJB	563283	Spare	10amp	5.1
F156	RJB	560893	UNICAN	3Amp	200.7
F157	Evap_Cmpt	560553	Plasma	5amp	60.1
F199	RJB	564520	Electricfansdrive	300A	13.1
F200	Parcel_Rack_LH_1st_Cmpt_	563284	VSSHDMI	15Amp	35.6
F201	Parcel_Rack_LH_1st_Cmpt_	563284	VSSHDMI	15Amp	35.6
F202	Parcel_Rack_LH_1st_Cmpt_	563284	VSSHDMI	15Amp	35.6
F203	Parcel_Rack_LH_1st_Cmpt_	563282	VSSHDMI	20Amp	35.6
F209	RJB	564174	Enginepre-heaterpower	150A	14.1
F243	RJB	560893	24VwhileEvap.relaypowered	3Amp	18.2
F300	Dashboard	563280	RearCameraRly	5amp	28.1
F301	VECT	563284	VECTTrailerinterface	15amp	26.4
F302	VECT	563284	VECTTrailerinterface	15amp	26.4
F303	VECT	563284	VECTTrailerinterface	15amp	26.4
F304	VECT	563284	VECTTrailerinterface	15amp	26.4
F305	VECT	563284	VECTTrailerinterface	15amp	26.4
F306	VECT	563284	VECTTrailerinterface	15amp	26.4
F307	VECT	563284	VECTTrailerinterface	15amp	26.4

Wire identification chart

**Note that the identification comes from the uphill component.*

Wire identification exemple: 12 - A47J1.8 - 16

Voltage	Circuit number	Wire size
0		0000
5	***Ground circuits:***	000
0/12	Electronic = Use I/O module number followed by an "R" and pin number. (ex: A47RJ1.8, A54RJ2.14)	00
0/24	Electronic ground studs = Use number "00" followed with the stud location and sequential number. (ex:00R1,00F4)	0
12	Chassis = Use number "0" followed by the ground stud location and sequential number. (ex: 0EV1, 0FH2)	1
24		2
120	***Power and voltage carrying circuits:***	3
ANA	Power distribution = Use uphill component identification as circuit name. (ex: F96, CB22)	4
BBUS	Multiplex outputs = Use output module number and pin number as circuit name. (ex: A55J1.4, A49J2.9)	6
DATA	Relays, diodes, resistors and any other component outputs =	8
DBUS	Use component name and pin number as circuit name. (ex: Sw55.A, R30.87, D12.B)	10
J1587	***Networks:***	12
J1939	DL0 = Bbus mux DL7 = Engine subnet	14
J2284	DL1 = J1939 DL9 = Power train subnet	16
LIN	DL2 = J2284 900 / 901 = J1587	18
PWM	DL3 = Dbus mux	20
GND		22
...OTHER		24

Batteries and alternators

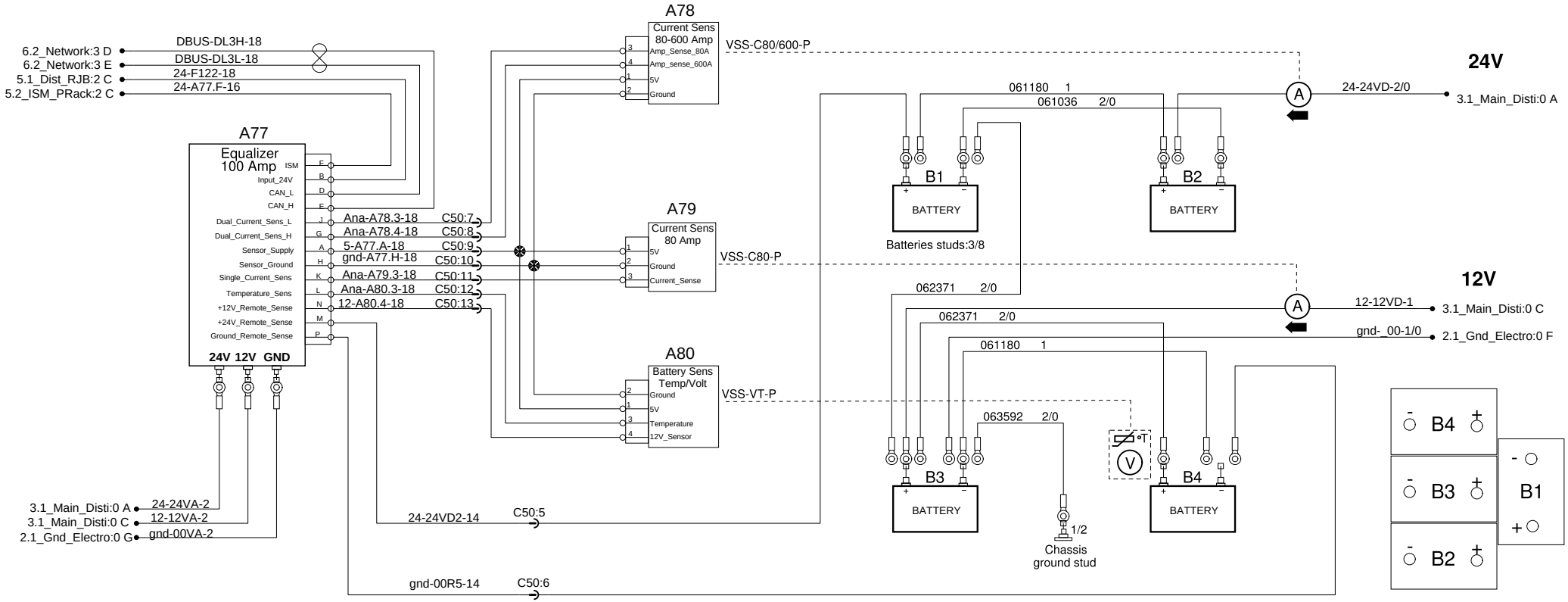

Alternators Bosch

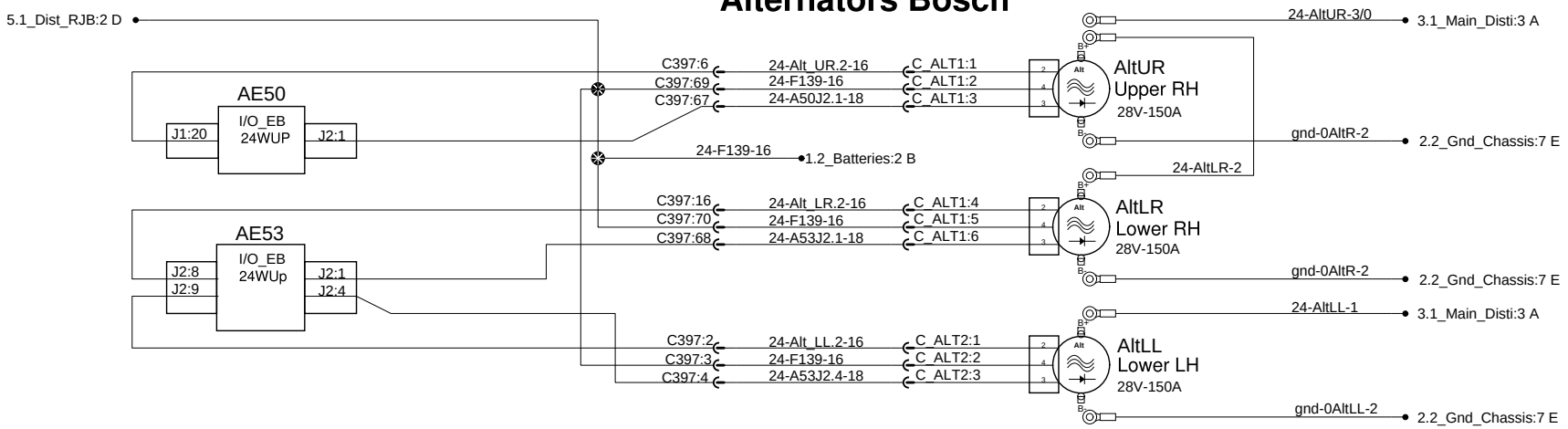

PREVOST®	WIRING DIAGRAM	No:D062140	Page:1.1	Rev:0

Alternators Remy

Mux Controlled

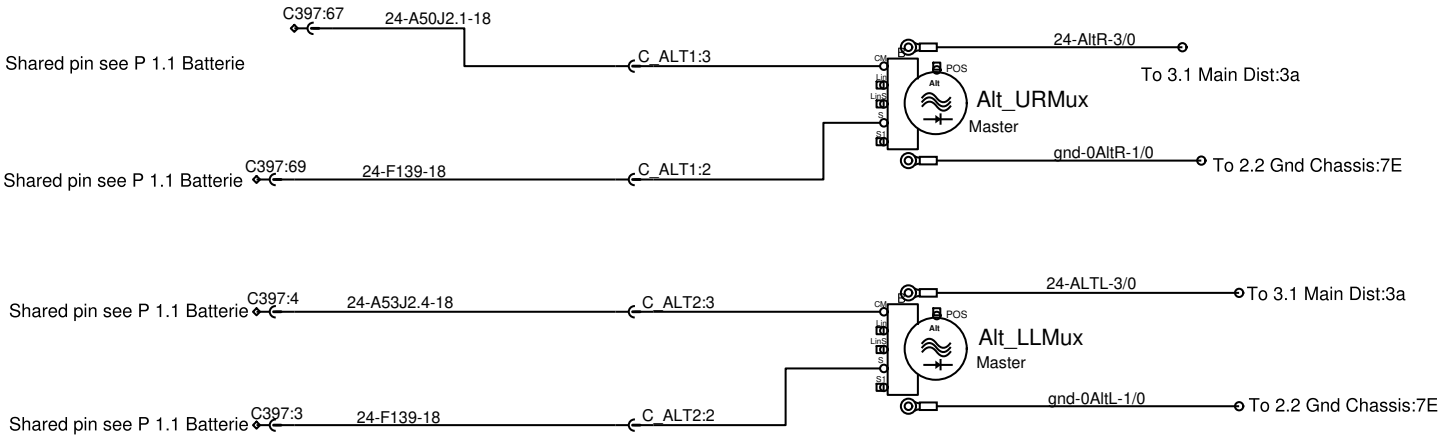

Lin Controlled

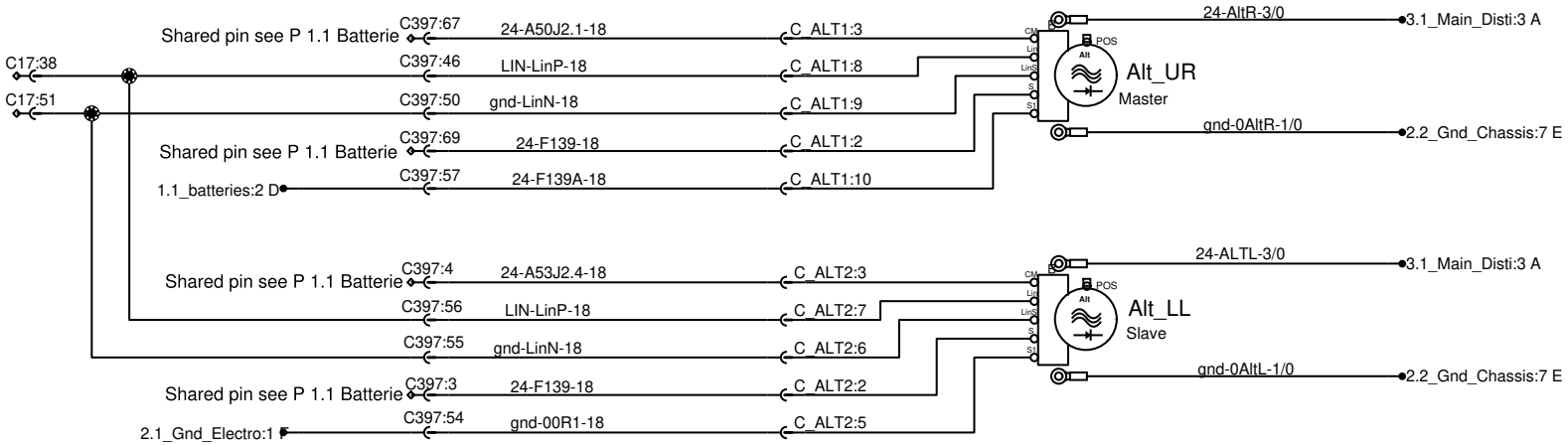

PREVOST®	WIRING DIAGRAM	No:D062140	Page:1.2	Rev:3

Electronic ground distribution

Ground distribution:
0-Electric gnd
00- Electronic Gnd

A-Dash - Lh console harness
F-Front junction box harness
FH-Front harness
R-Rear junction box harness
FR-Front to rear

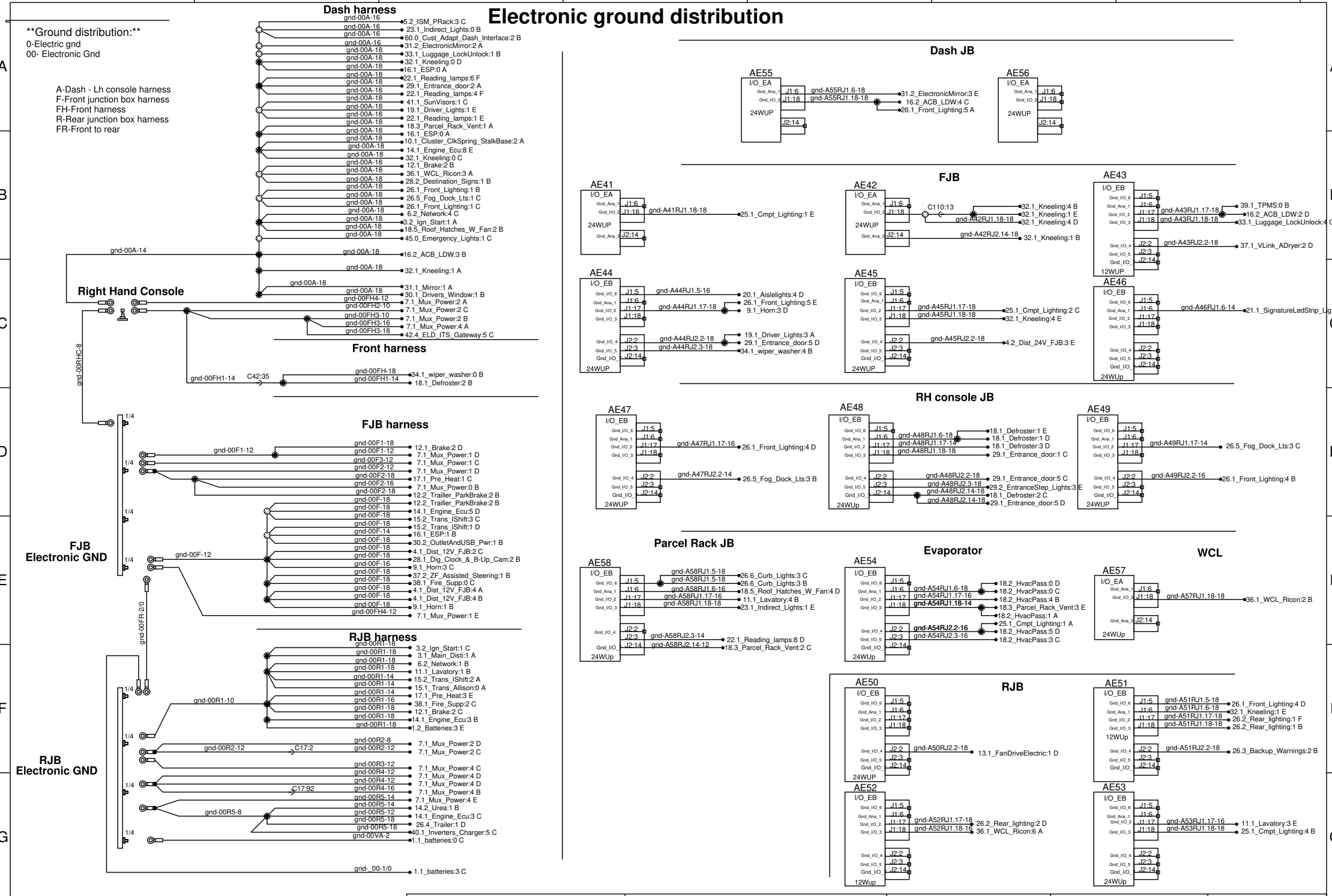

PREVOST®	WIRING DIAGRAM	No:D062140	Page:2.1	Rev:3

Ground distribution:
0-Electric gnd
00- Electronic Gnd
A-Dash - Lh console harness
F-Front junction box harness
FH-Front harness
FCH-Front clearance harness
R-Rear junction box harness
FR-Front to rear

Chassis ground distribution

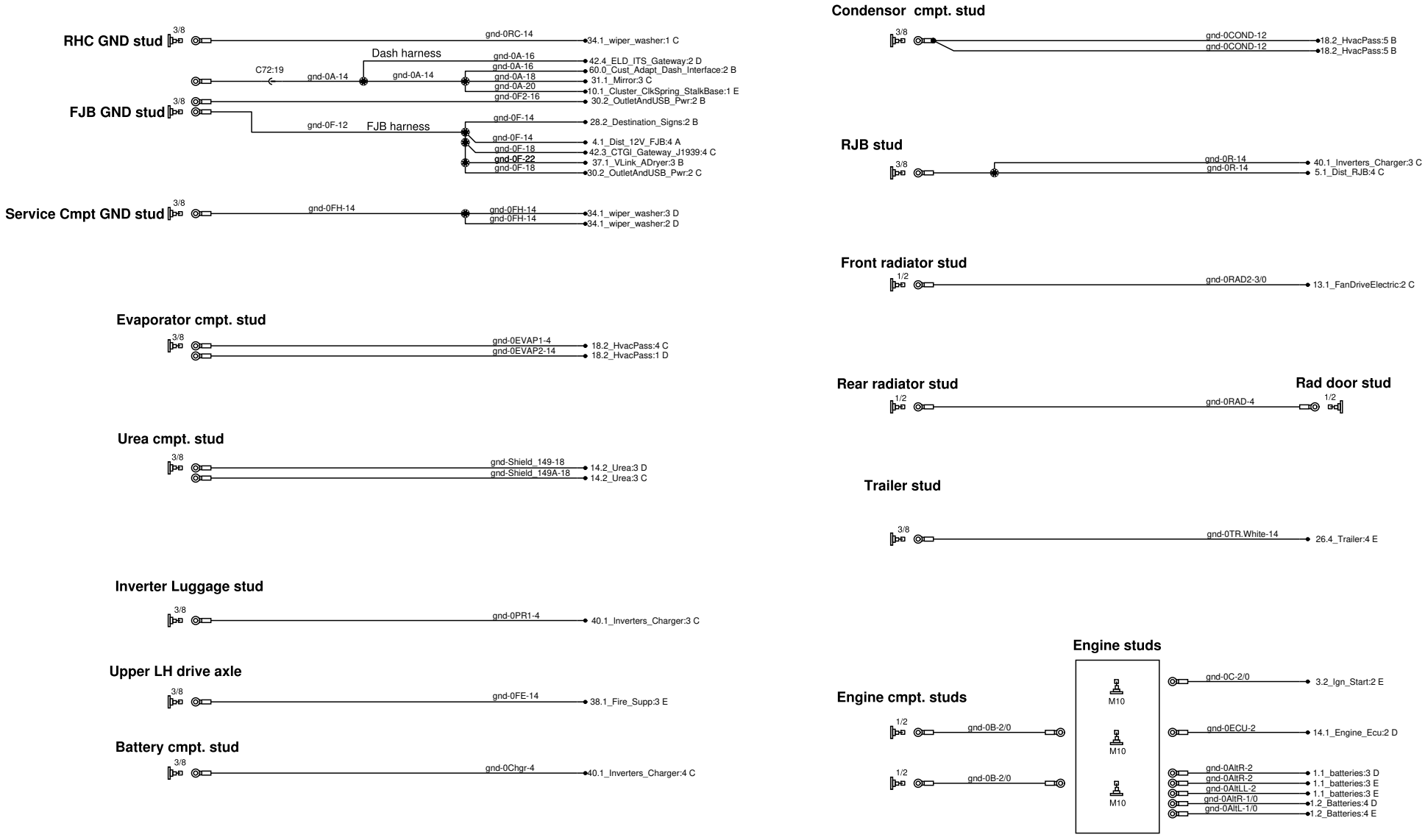

Main distribution batteries & ignition

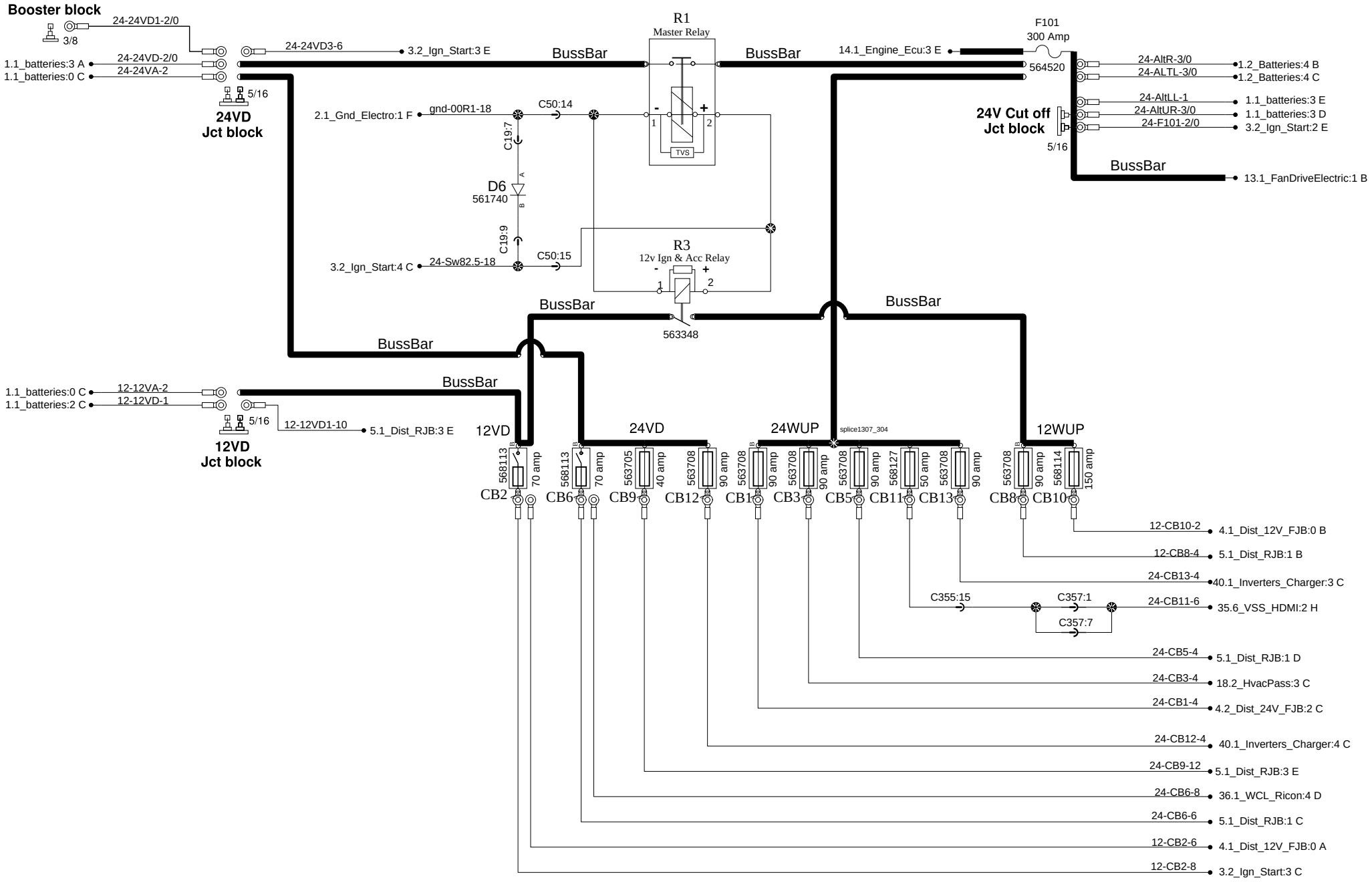

PREVOST®	WIRING DIAGRAM	No:D062140	Page:3.1	Rev:0

Ignition and engine start

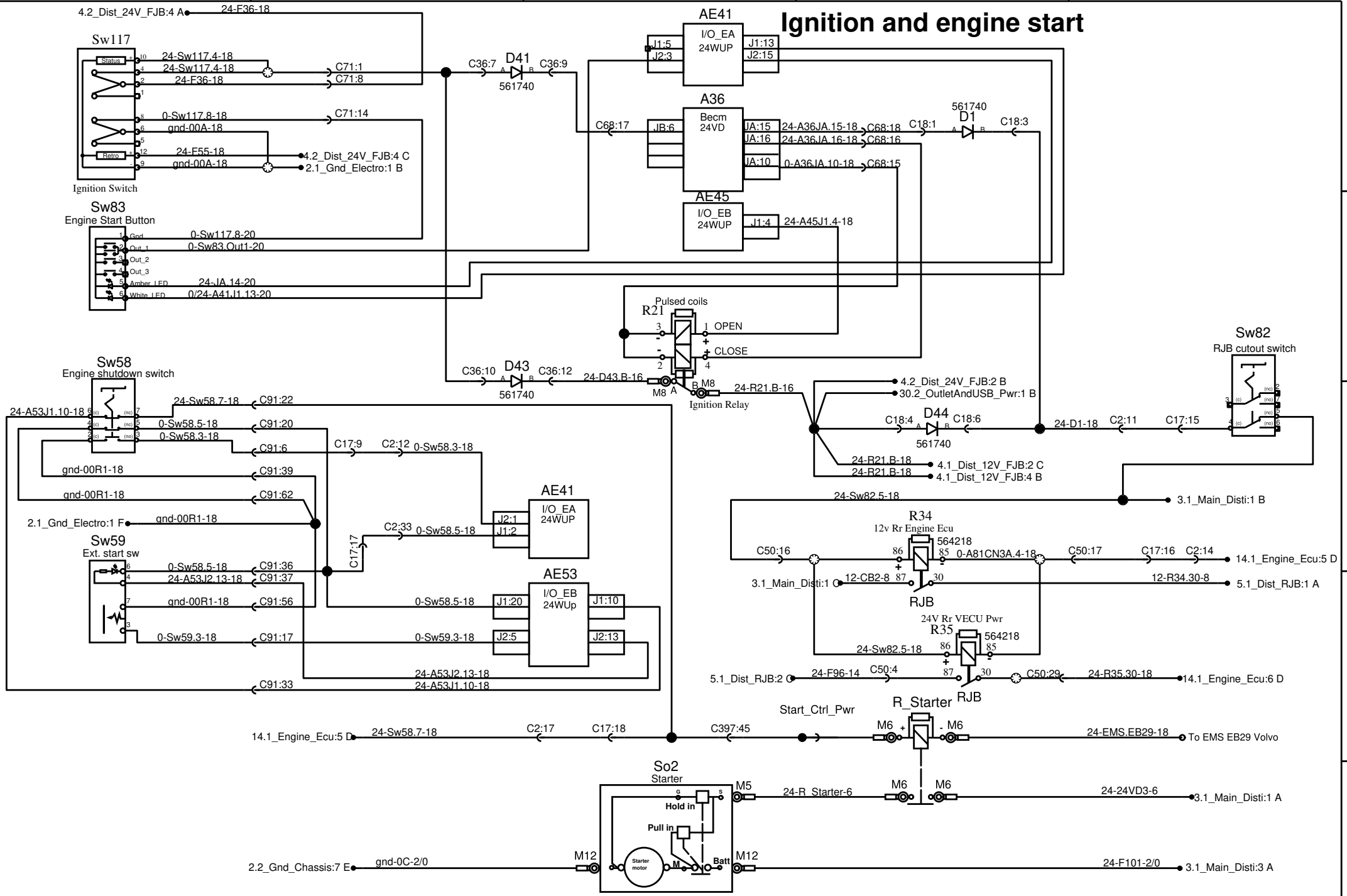

PREVOST®	WIRING DIAGRAM	No:D062140	Page:3.2	Rev:3

12V Power distribution front junction box

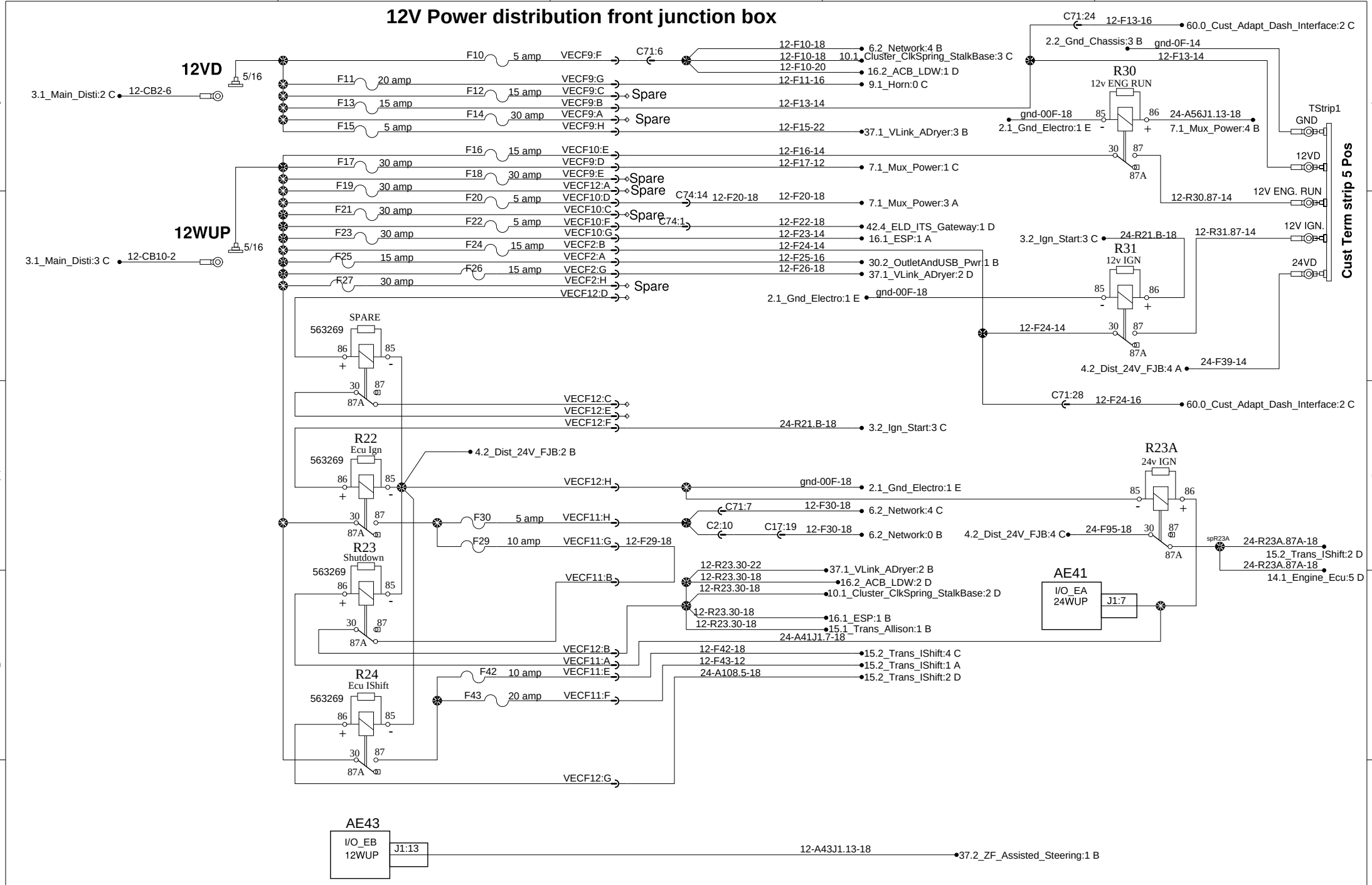

PREVOST®	WIRING DIAGRAM	No:D062140	Page:4.1	Rev:01

24V Power distribution front junction box

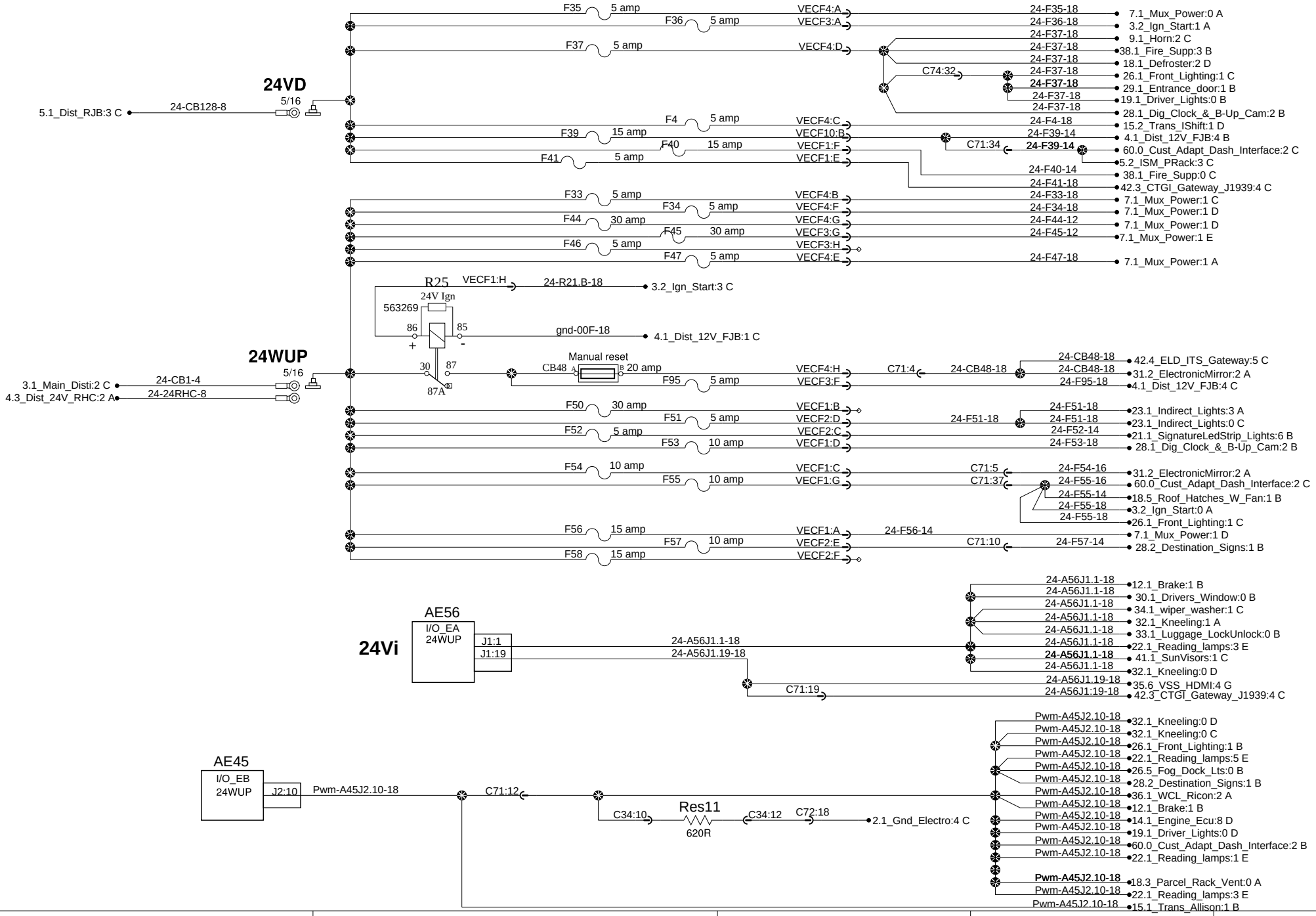

PREVOST®	WIRING DIAGRAM	No:D062140	Page:4.2	Rev:01

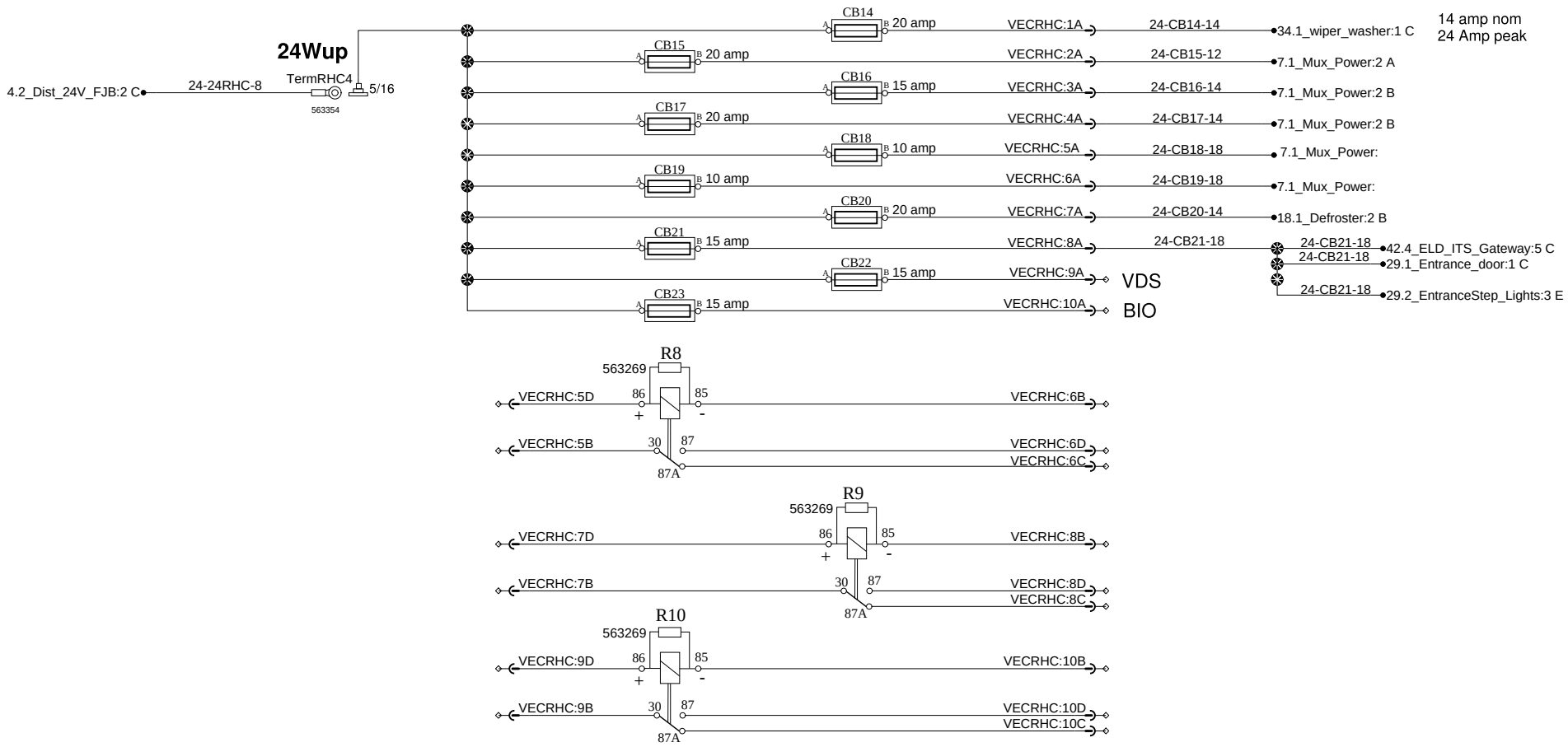

PREVOST®	WIRING DIAGRAM	No:D062140	Page:4.3	Rev:0

Power distribution rear junction box

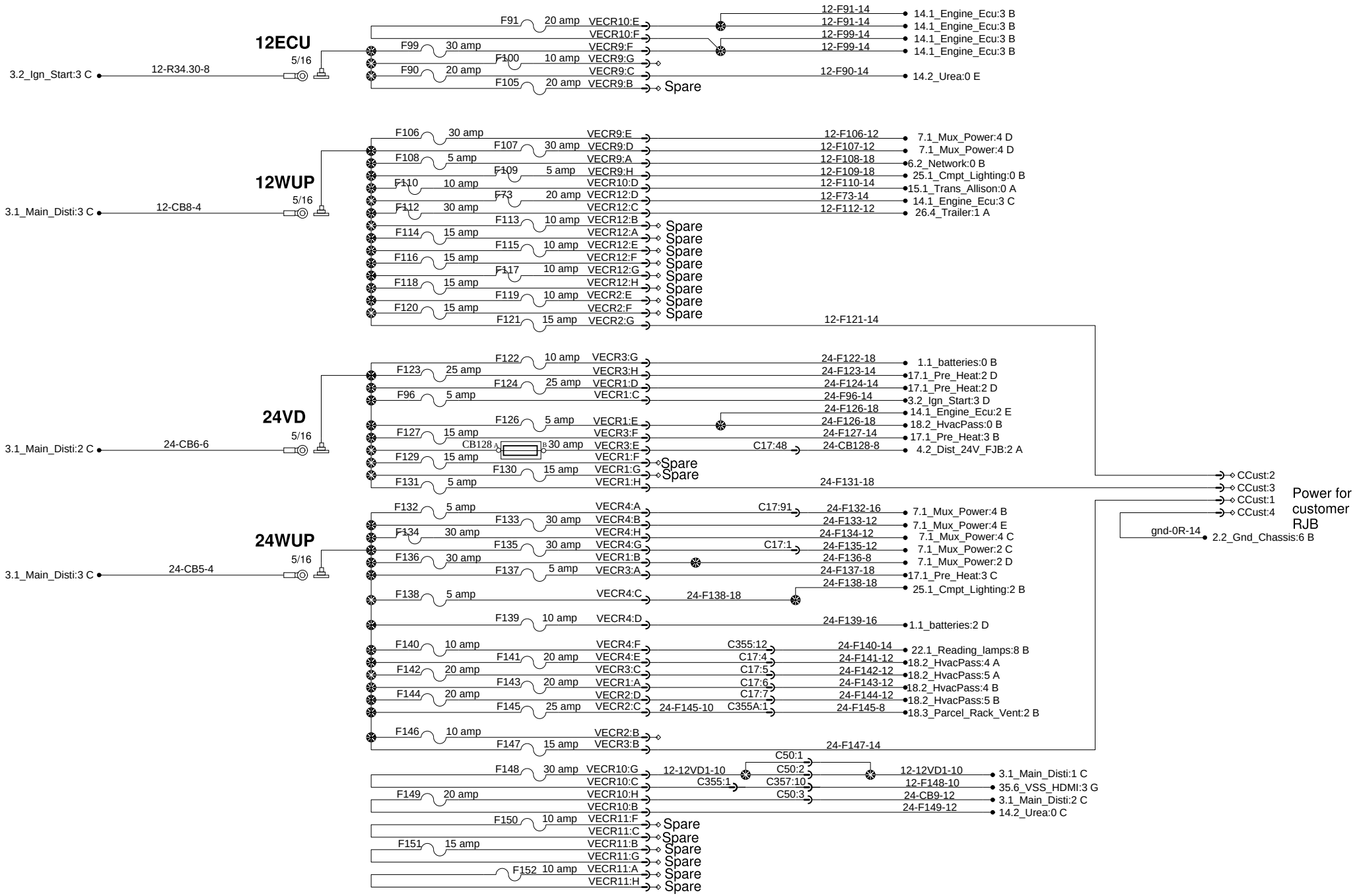

PREVOST®	WIRING DIAGRAM	No:D062140	Page:5.1	Rev:0

ISM Parcel Rack

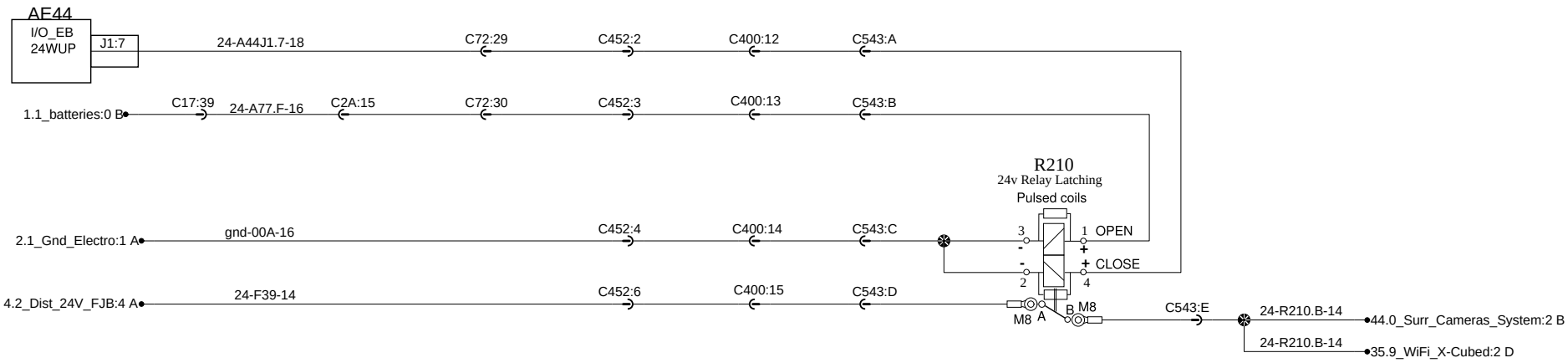

PREVOST®	WIRING DIAGRAM	No:D062140	Page:5.2	Rev:0

Multiplex Can, J1587, 1939 network and addressing

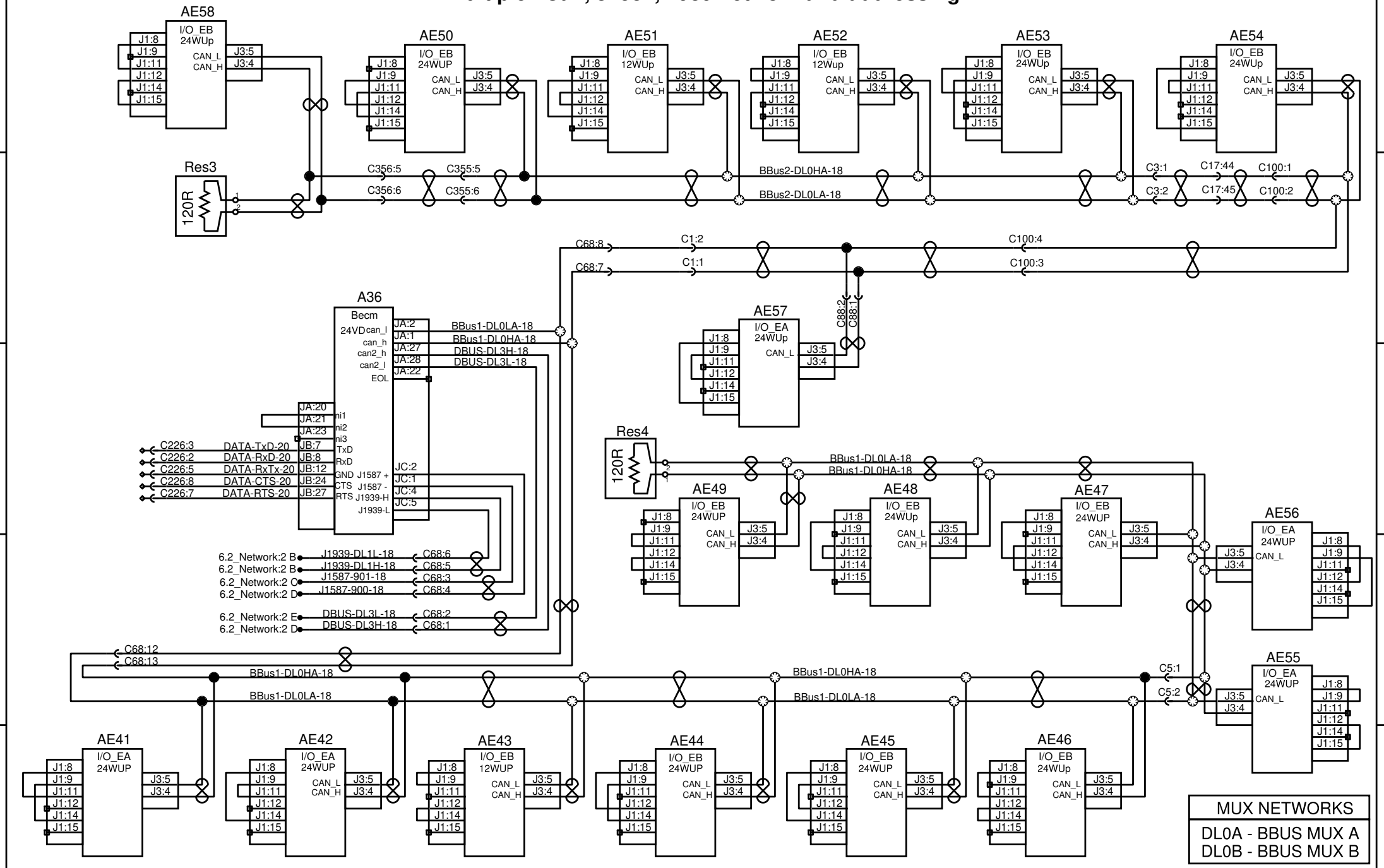

PREVOST®	WIRING DIAGRAM	No:D062140	Page:6.1	Rev:3

J1939, Can Iso J2284, J1587 and DBUS

Open C194 and connect C194spA and C194spB to connect Vansco gateway.

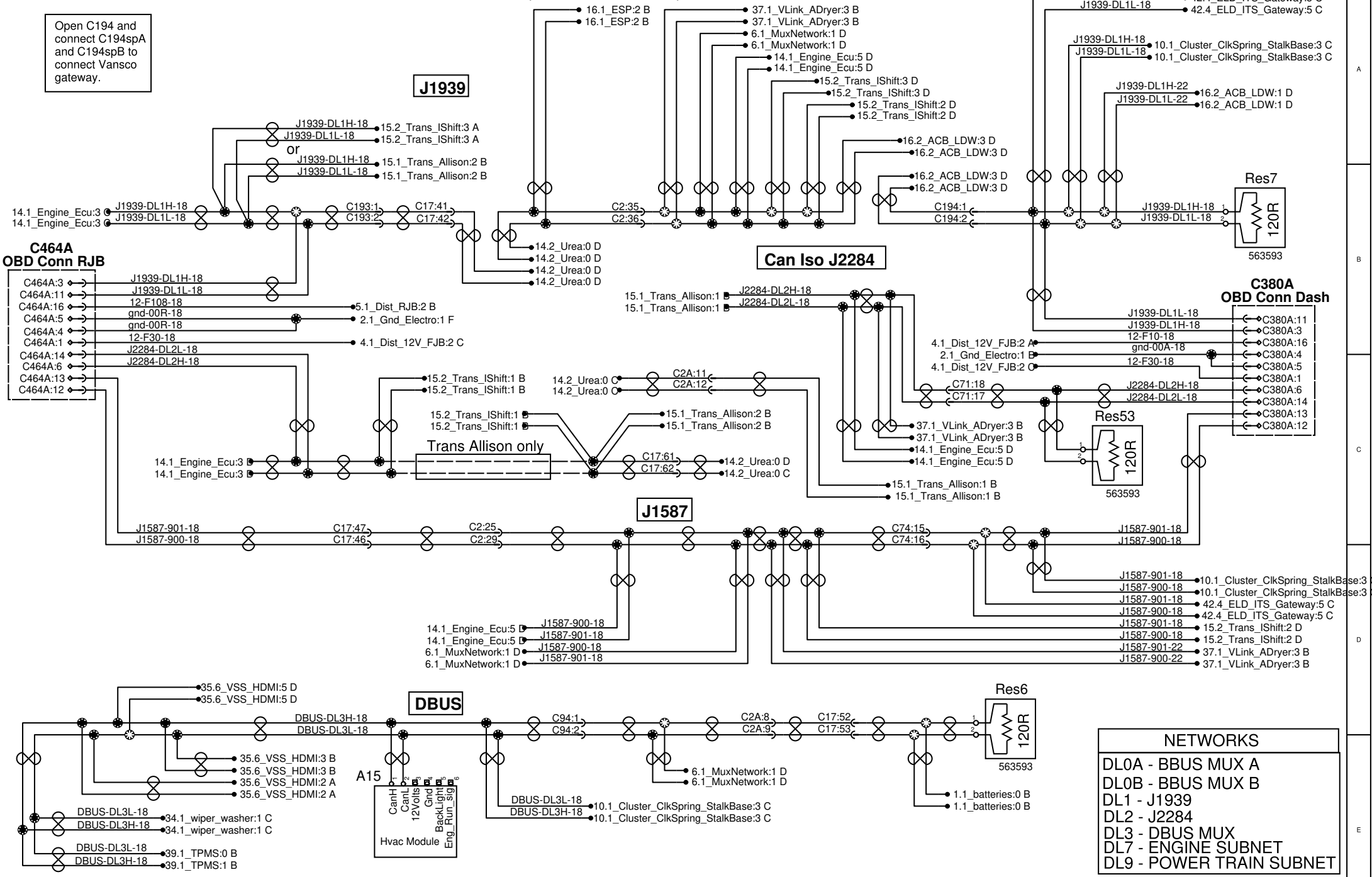

NETWORKS
DL0A - BBUS MUX A
DL0B - BBUS MUX B
DL1 - J1939
DL2 - J2284
DL3 - DBUS MUX
DL7 - ENGINE SUBNET
DL9 - POWER TRAIN SUBNET

PREVOST®

WIRING DIAGRAM

No:D062140

Page:6.2

Rev:3

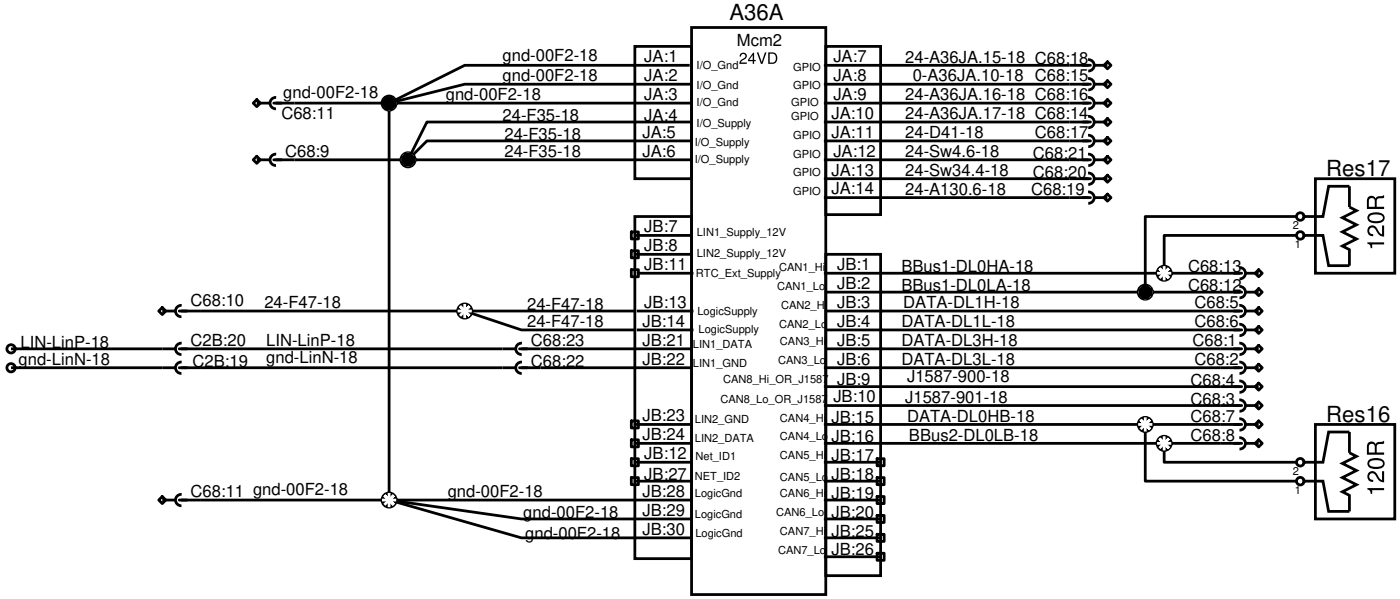

PREVOST®	WIRING DIAGRAM	No:D062140	Page:6.3	Rev:3

Multiplex power supply distribution

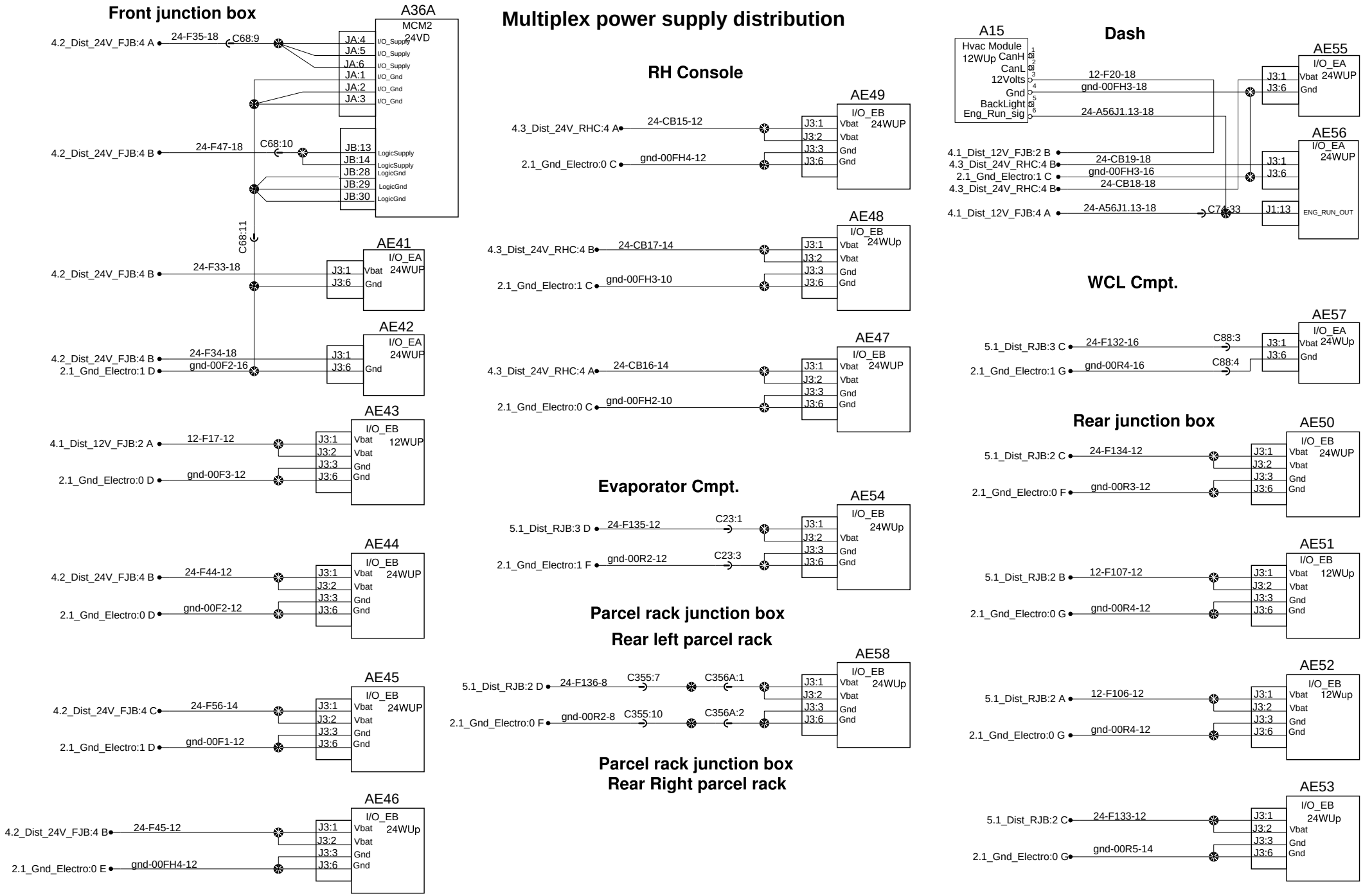

PREVOST®	WIRING DIAGRAM	No:D062140	Page:7.1	Rev:0

Multiplex power supply distribution

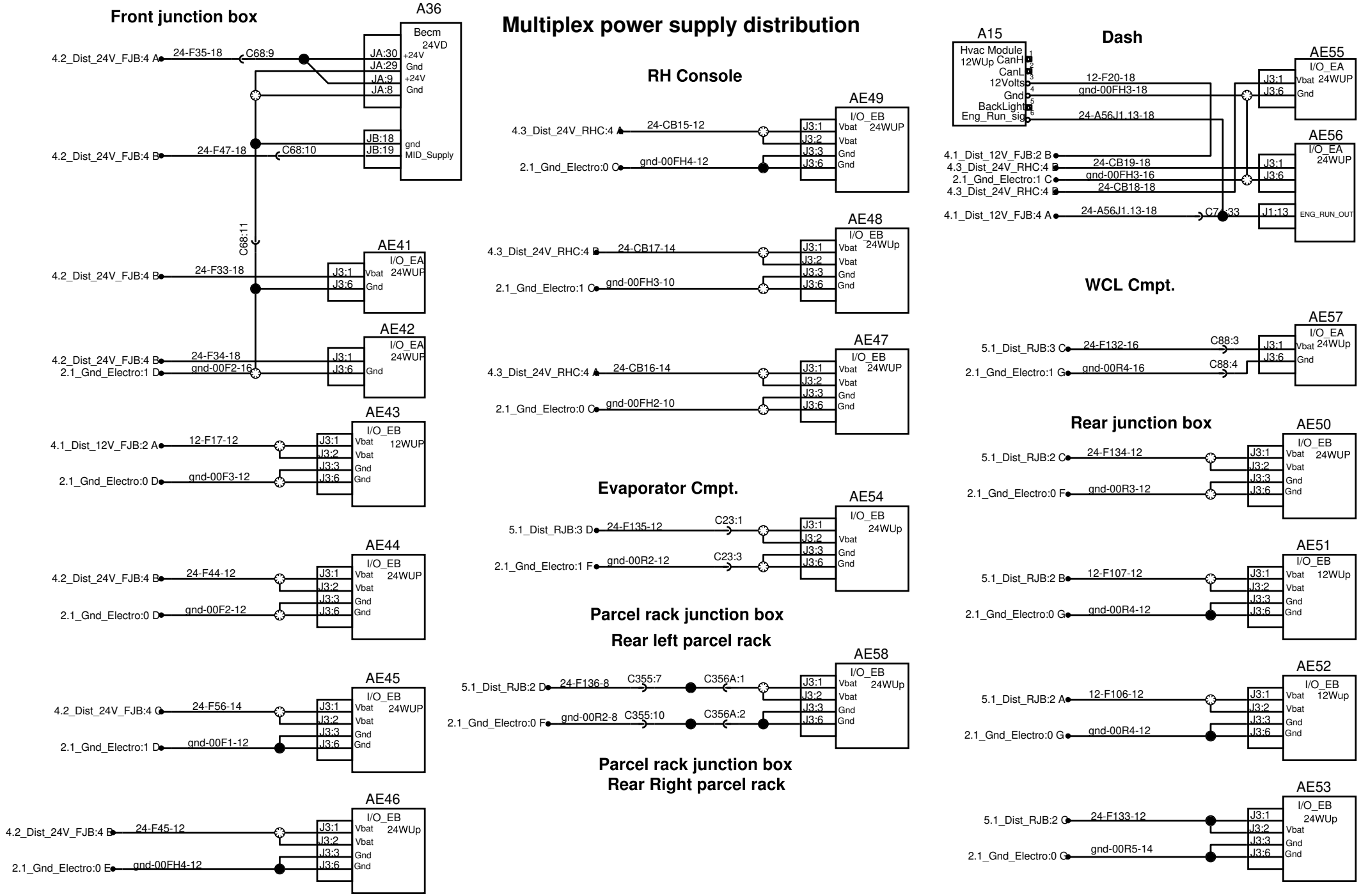

PREVOST®	WIRING DIAGRAM	No:D062140	Page:7.1	Rev:3

Spares wires

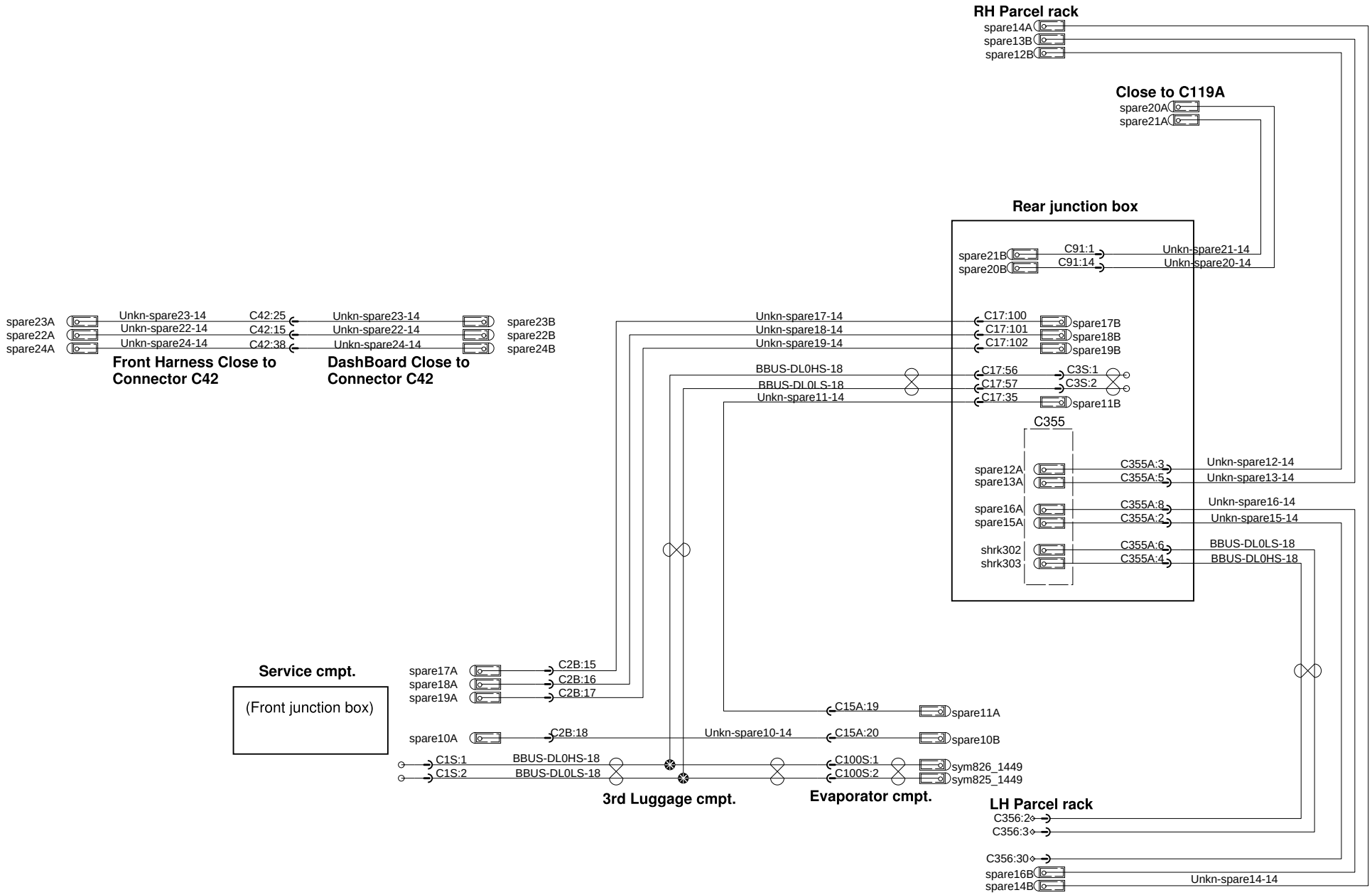

Horn

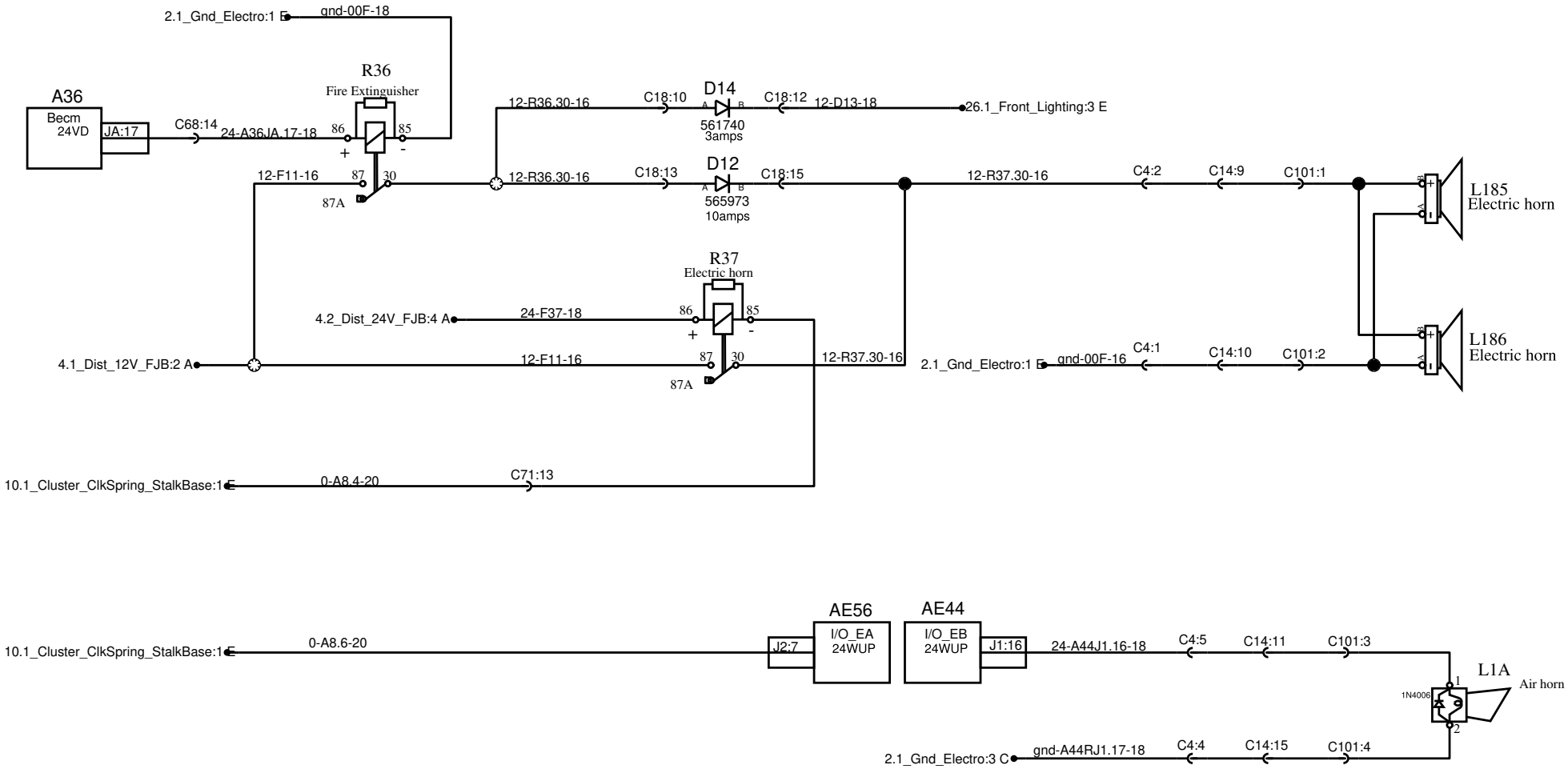

PREVOST®	WIRING DIAGRAM	No:D062140	Page:9.1	Rev:3

Cluster, Stalk Arm and SWS

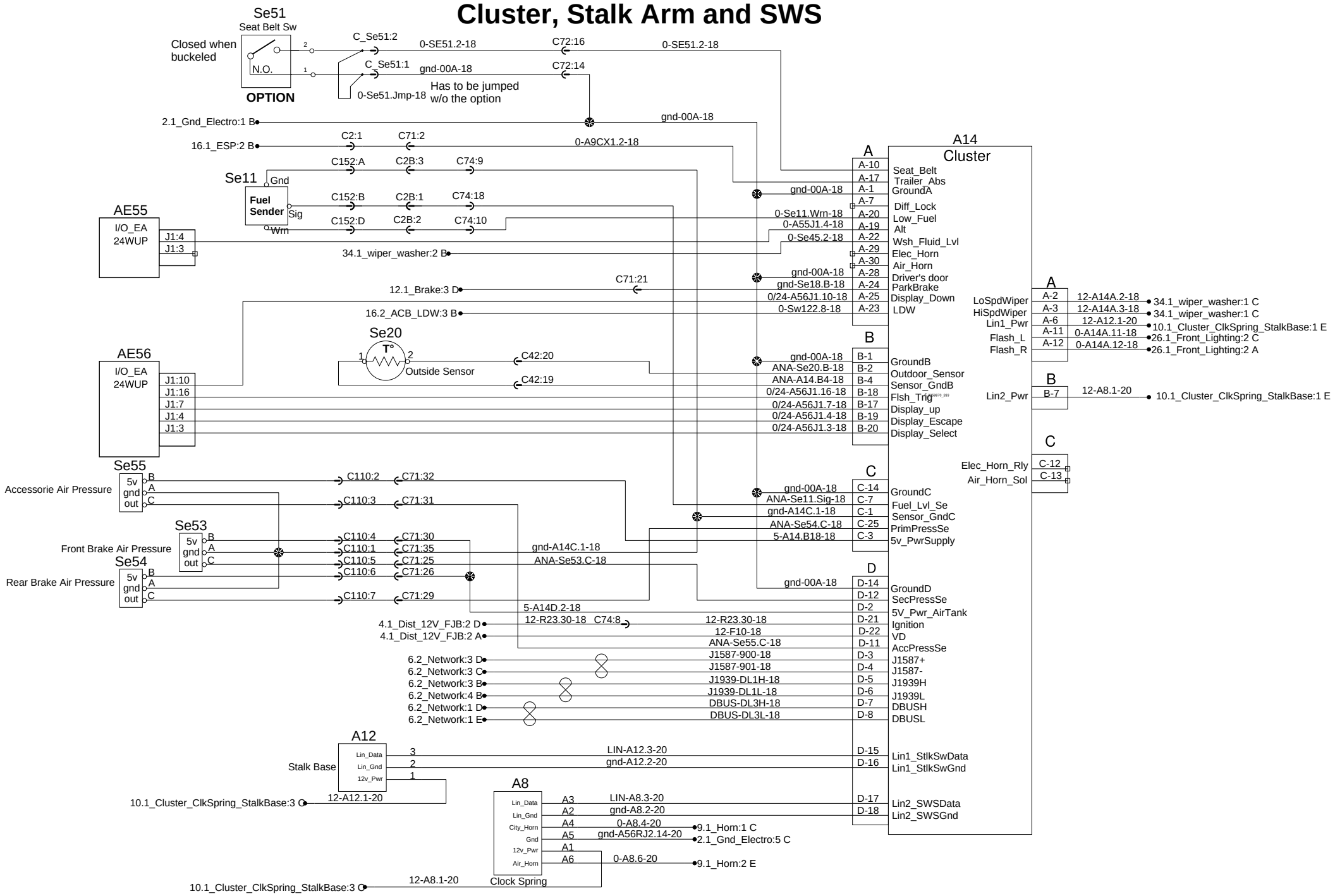

PREVOST®	WIRING DIAGRAM	No:D062140	Page:10.1	Rev:0

Cluster, Stalk Arm and SWS

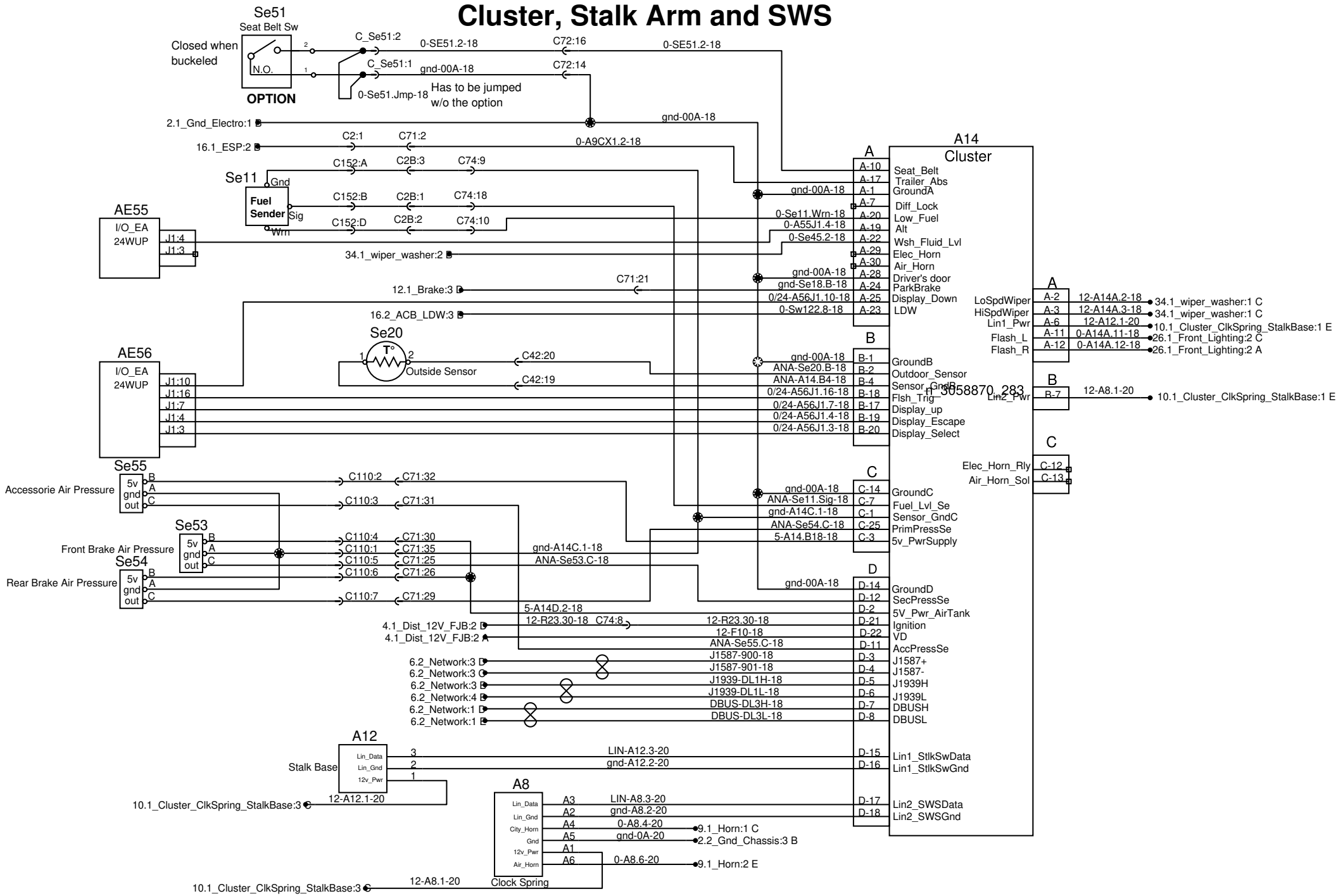

PREVOST®	WIRING DIAGRAM	No:D062140	Page:10.1	Rev:3

Lavatory and No Smoking sign

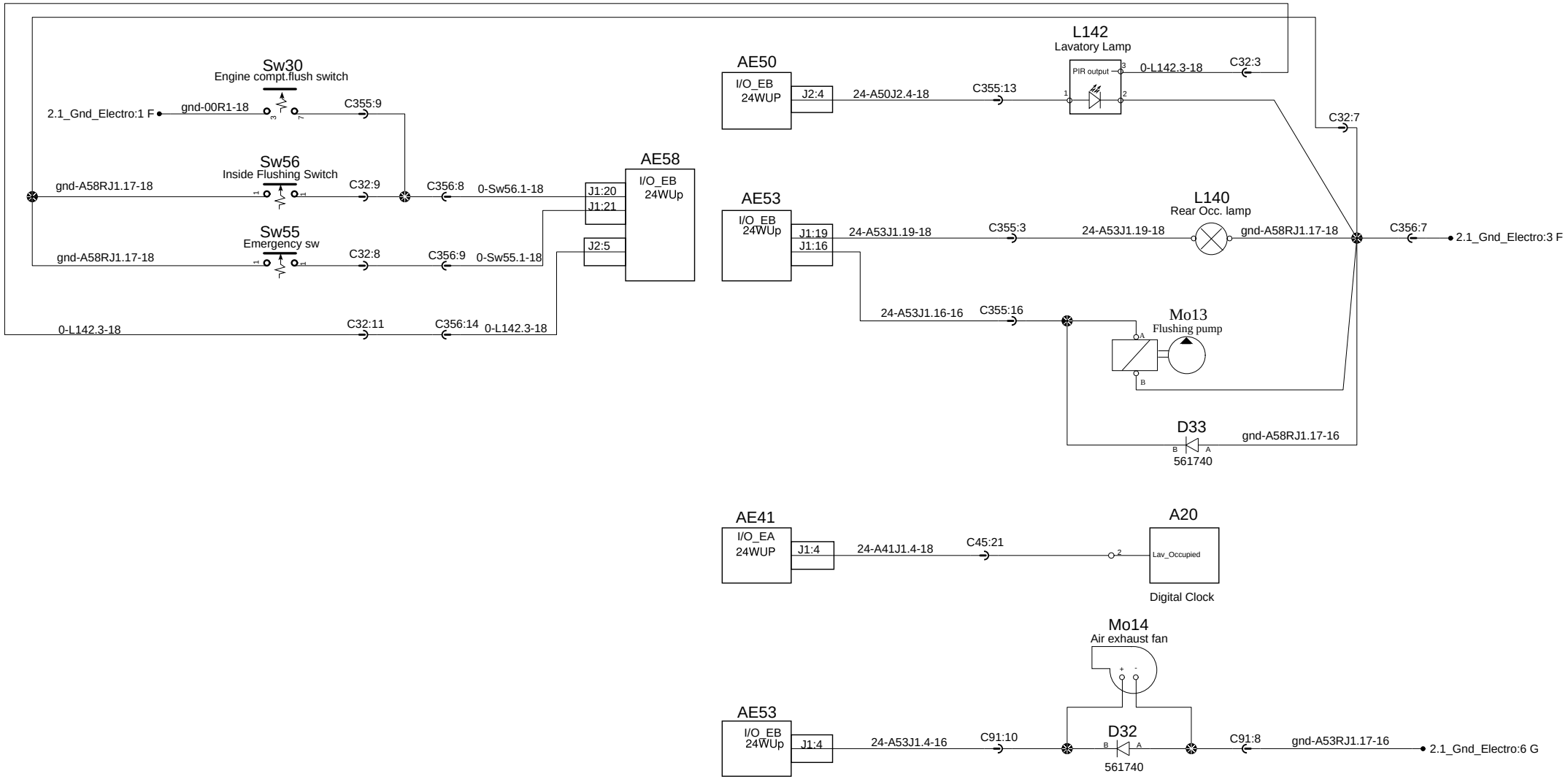

PREVOST®	WIRING DIAGRAM	No:D062140	Page:11.1	Rev:0

Brake, Engine brake and Retarder

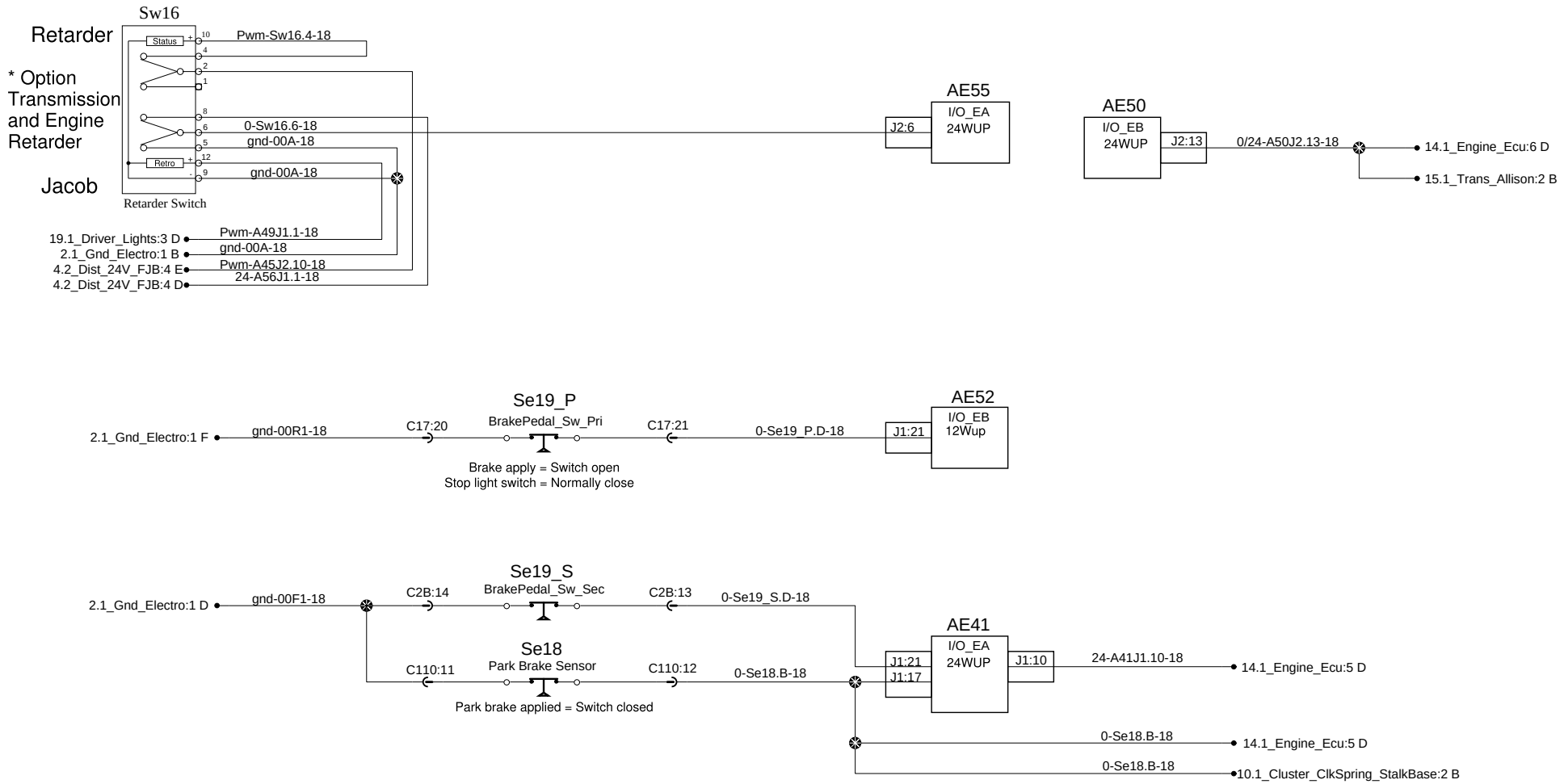

Trailler park brake

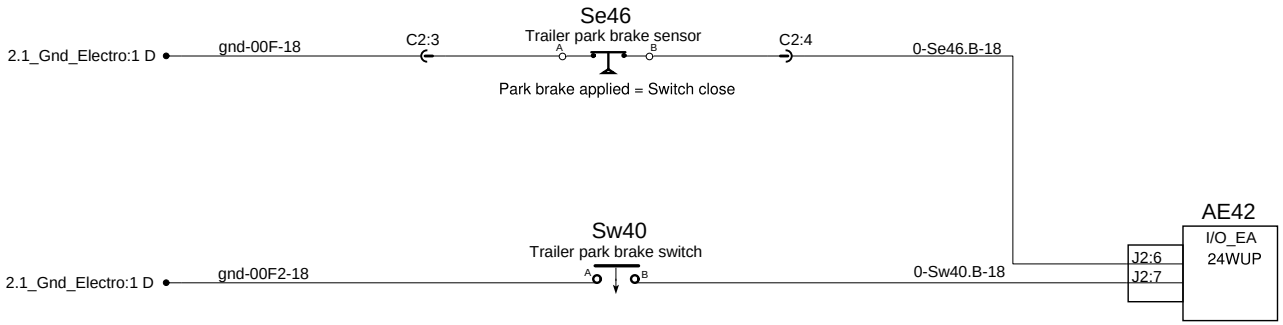

Electric fans drive

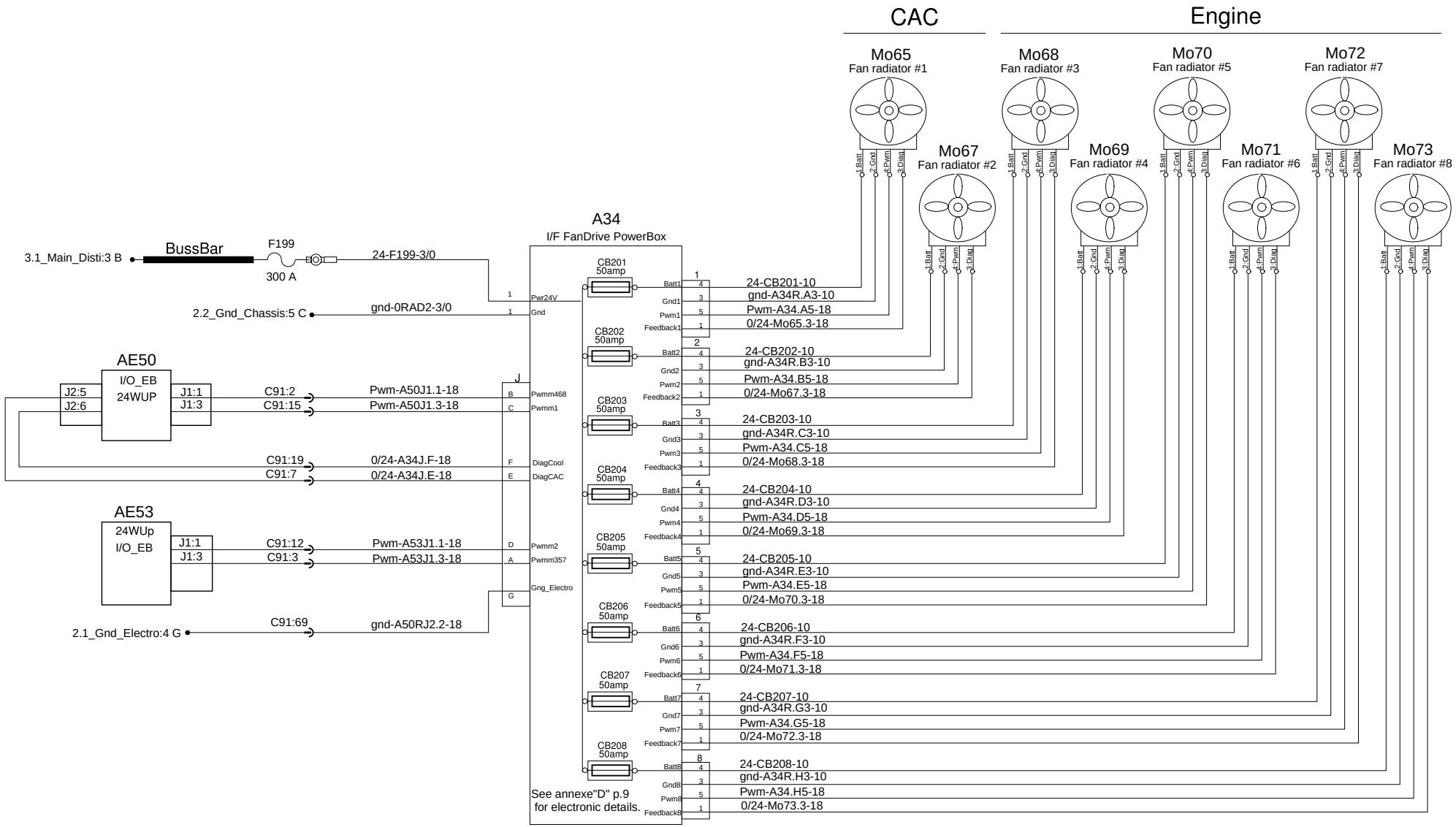

PREVOST®	WIRING DIAGRAM	No:D062140	Page:13.1	Rev:0

Engine ECU Volvo

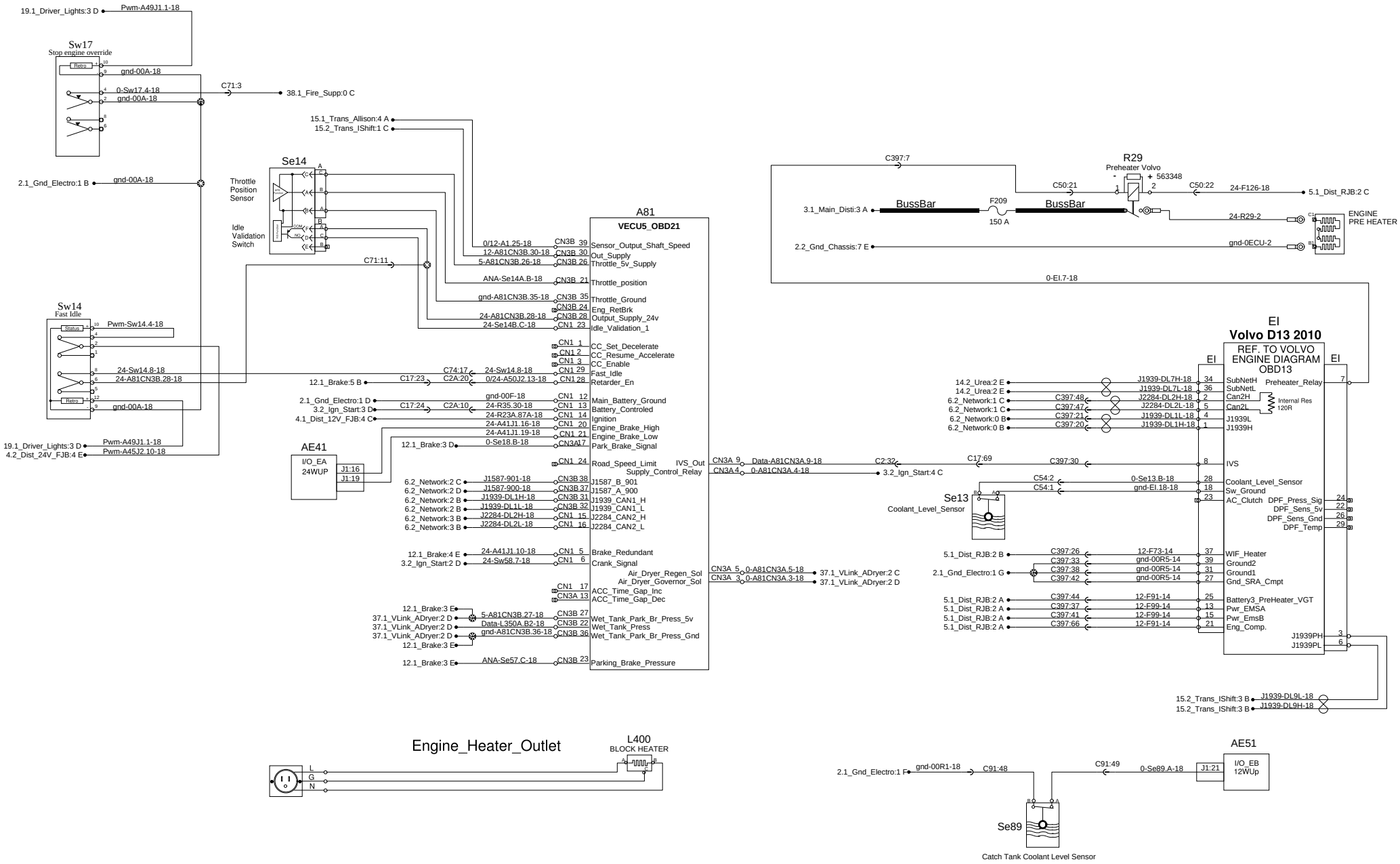

Rev:0

Page:14.1

No:D062140

WIRING DIAGRAM

PREVOST

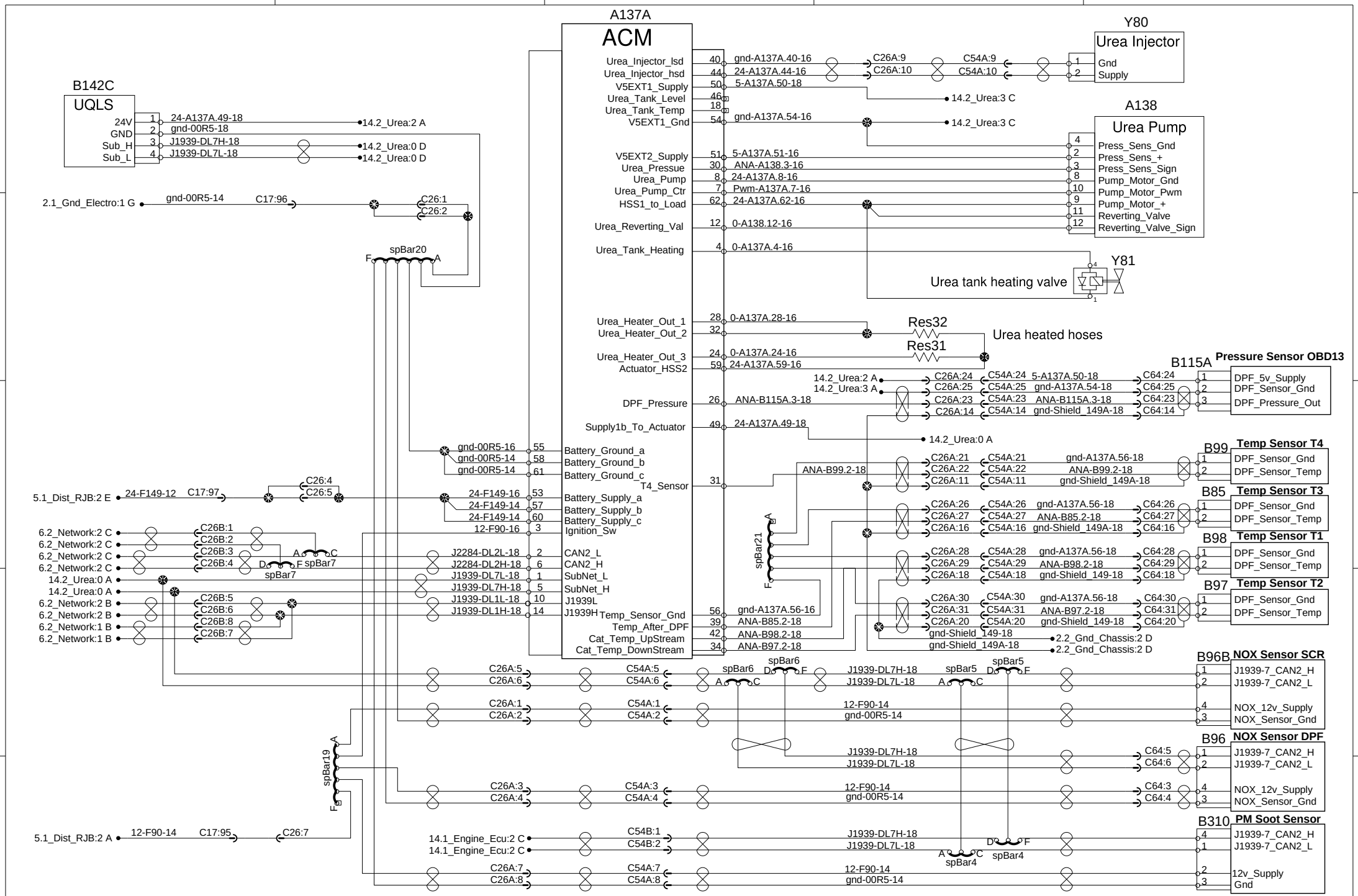
A137A
ACM
B142C
UQLS
24V
GND
Sub_H
Sub_L
24-A137A.49-18
gnd-00R5-18
J1939-DL7H-18
J1939-DL7L-18
14.2_Urea:2 A
14.2_Urea:0 D
14.2_Urea:0 D
2.1_Gnd_Electro:1 G
gnd-00R5-14
C17:96
C26:1
C26:2
spBar20
Urea_Injector_lsd
Urea_Injector_hsd
V5EXT1_Supply
Urea_Tank_Level
Urea_Tank_Temp
V5EXT1_Gnd
V5EXT2_Supply
Urea_Pressue
Urea_Pump
Urea_Pump_Ctr
HSS1_to_Load
Urea_Reverting_Val
Urea_Tank_Heating
Urea_Heater_Out_1
Urea_Heater_Out_2
Urea_Heater_Out_3
Actuator_HSS2
DPF_Pressure
Supply1b_To_Actuator
Battery_Ground_a
Battery_Ground_b
Battery_Ground_c
T4_Sensor
Battery_Supply_a
Battery_Supply_b
Battery_Supply_c
Ignition_Sw
CAN2_L
CAN2_H
SubNet_L
SubNet_H
J1939L
J1939H
Temp_Sensor_Gnd
Temp_After_DPF
Cat_Temp_UpStream
Cat_Temp_DownStream
gnd-A137A.40-16
24-A137A.44-16
5-A137A.50-18
gnd-A137A.54-16
5-A137A.51-16
ANA-A138.3-16
24-A137A.8-16
Pwm-A137A.7-16
24-A137A.62-16
0-A138.12-16
0-A137A.4-16
0-A137A.28-16
0-A137A.24-16
24-A137A.59-16
ANA-B115A.3-18
24-A137A.49-18
gnd-A137A.56-16
ANA-B85.2-18
ANA-B98.2-18
ANA-B97.2-18
C26A:9
C26A:10
C54A:9
C54A:10
Y80
Urea Injector
Gnd
Supply
A138
Urea Pump
Press_Sens_Gnd
Press_Sens_+
Press_Sens_Sign
Pump_Motor_Gnd
Pump_Motor_Pwm
Pump_Motor_+
Reverting_Valve
Reverting_Valve_Sign
Y81
Urea tank heating valve
Res32
Res31
Urea heated hoses
B115A
Pressure Sensor OBD13
DPF_5v_Supply
DPF_Sensor_Gnd
DPF_Pressure_Out
B99
Temp Sensor T4
DPF_Sensor_Gnd
DPF_Sensor_Temp
B85
Temp Sensor T3
DPF_Sensor_Gnd
DPF_Sensor_Temp
B98
Temp Sensor T1
DPF_Sensor_Gnd
DPF_Sensor_Temp
B97
Temp Sensor T2
DPF_Sensor_Gnd
DPF_Sensor_Temp
B96B
NOX Sensor SCR
J1939-7_CAN2_H
J1939-7_CAN2_L
NOX_12v_Supply
NOX_Sensor_Gnd
B96
NOX Sensor DPF
J1939-7_CAN2_H
J1939-7_CAN2_L
NOX_12v_Supply
NOX_Sensor_Gnd
B310
PM Soot Sensor
J1939-7_CAN2_H
J1939-7_CAN2_L
12v_Supply
Gnd
5.1_Dist_RJB:2 E
24-F149-12
C17:97
C26:4
C26:5
24-F149-16
24-F149-14
12-F90-16
J2284-DL2L-18
J2284-DL2H-18
J1939-DL7L-18
J1939-DL7H-18
J1939-DL1L-18
J1939-DL1H-18
6.2_Network:2 C
6.2_Network:2 B
6.2_Network:1 B
6.2_Network:1 B
C26B:1
C26B:2
C26B:3
C26B:4
C26B:5
C26B:6
C26B:8
C26B:7
spBar7
spBar21
spBar19
spBar6
spBar5
spBar4
12-F90-14
5.1_Dist_RJB:2 A
C17:95
C26:7
14.1_Engine_Ecu:2 C
C54B:1
C54B:2
C26A:7
C26A:8
C54A:7
C54A:8
2.2_Gnd_Chassis:2 D
PREVOST
WIRING DIAGRAM
No:D062140
Page:14.2
Rev:0

Transmission Alisson Gen 5

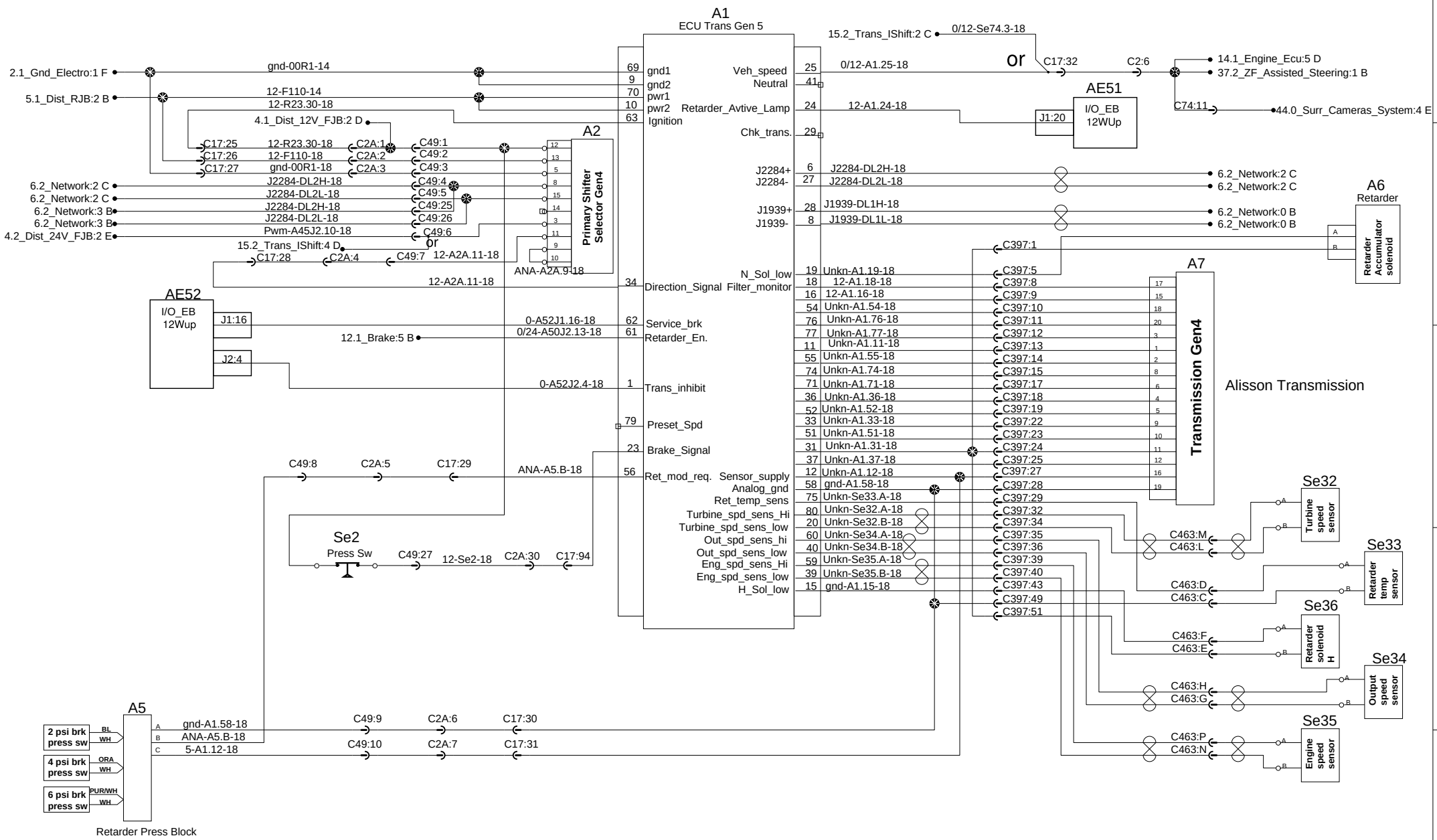

PREVOST®	WIRING DIAGRAM	No:D062140	Page:15.1	Rev:0

Transmission I_Shift

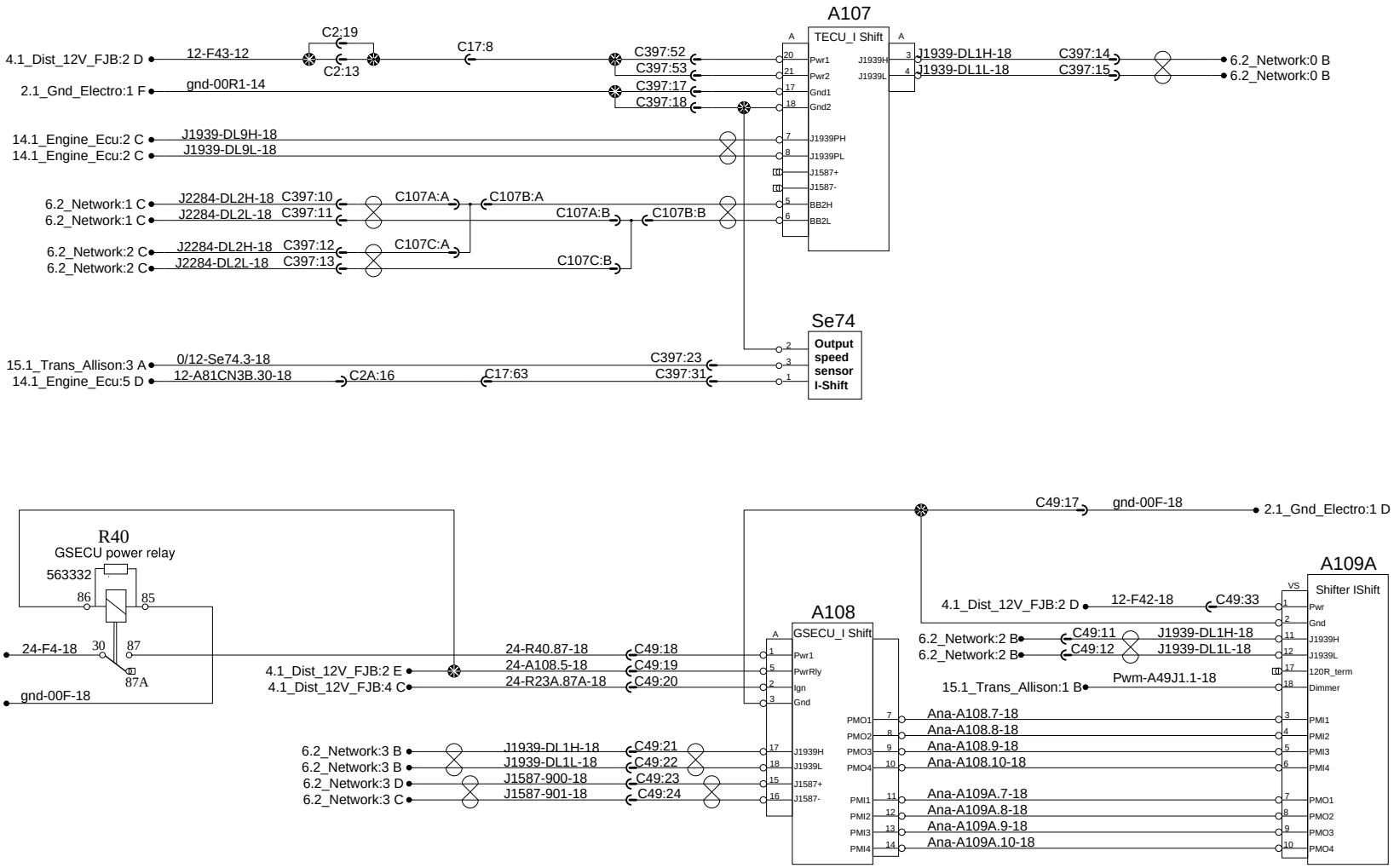

ESP

Electronic Stability Program

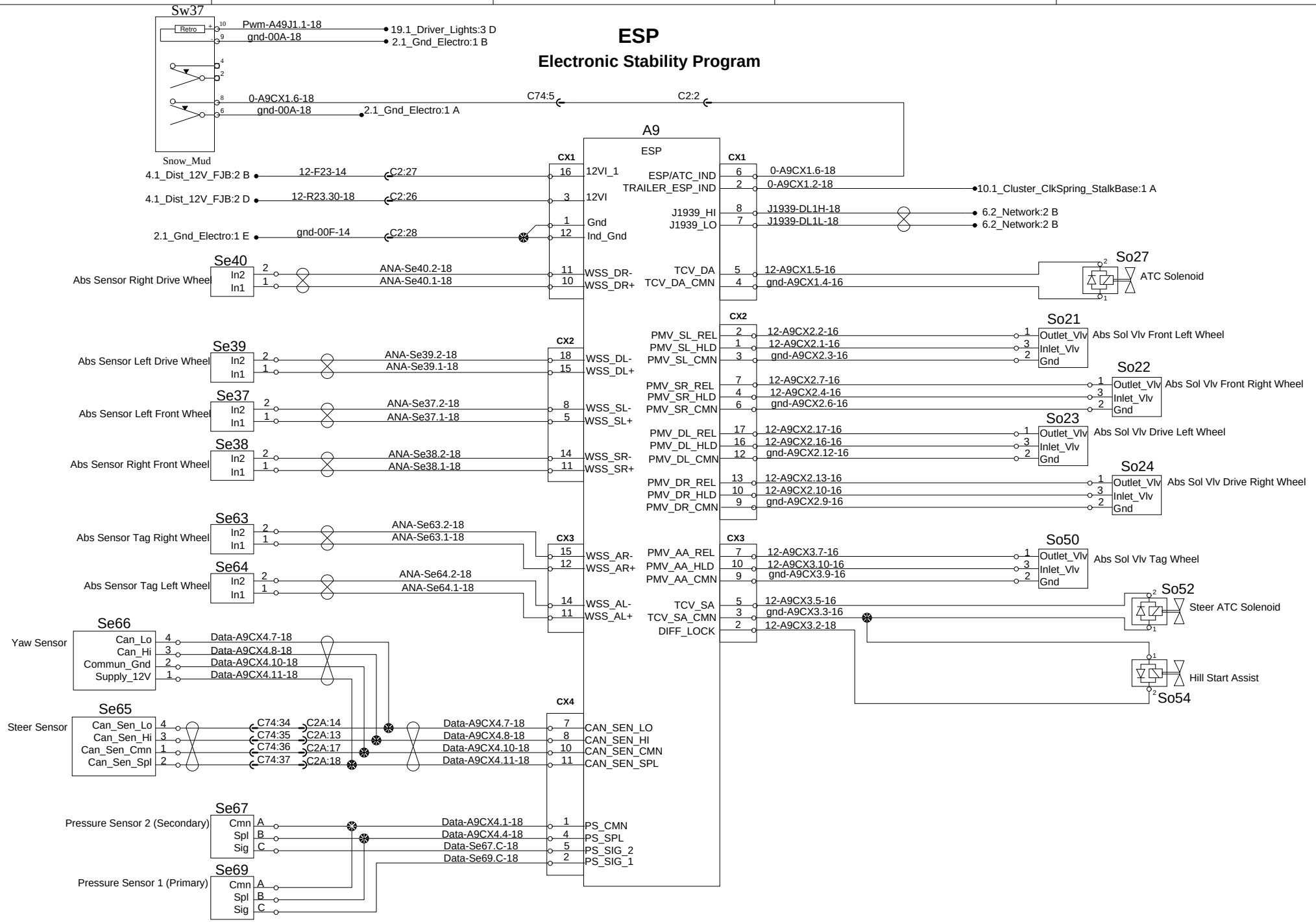

PREVOST®	WIRING DIAGRAM	No:D062140	Page:16.1	Rev:0

ACC & LDW

Adaptative cruise control breaking and Line departure warning

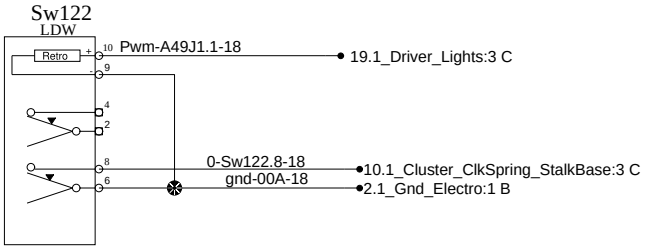

Forward collision warning

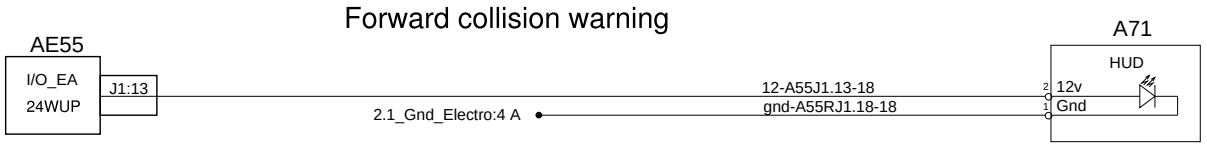

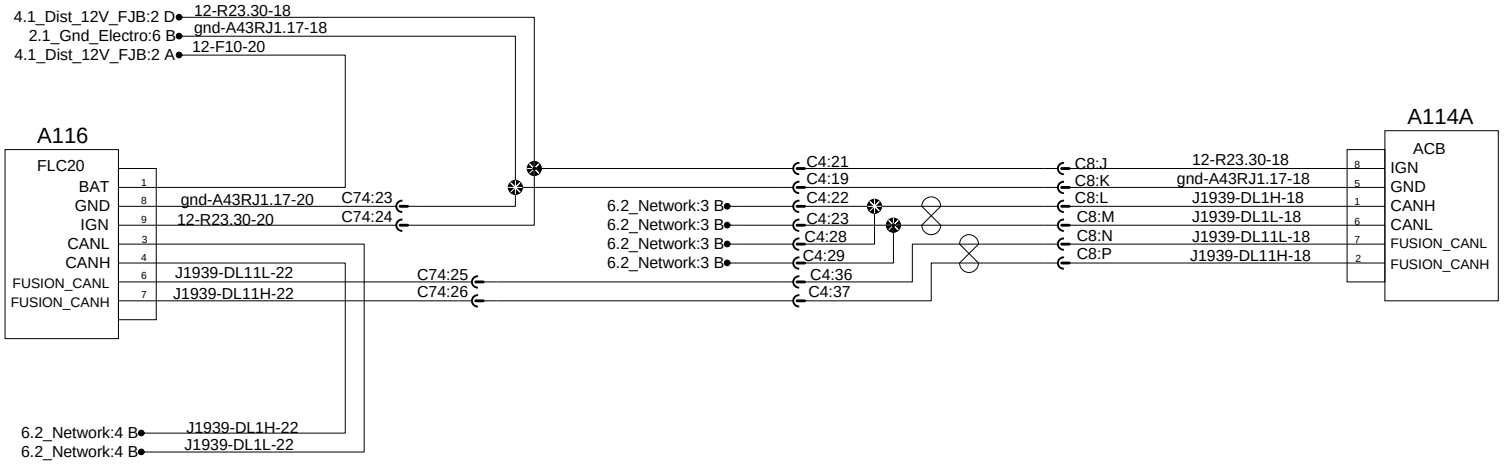

Water PreHeater (Spheros or Pro-Heat)

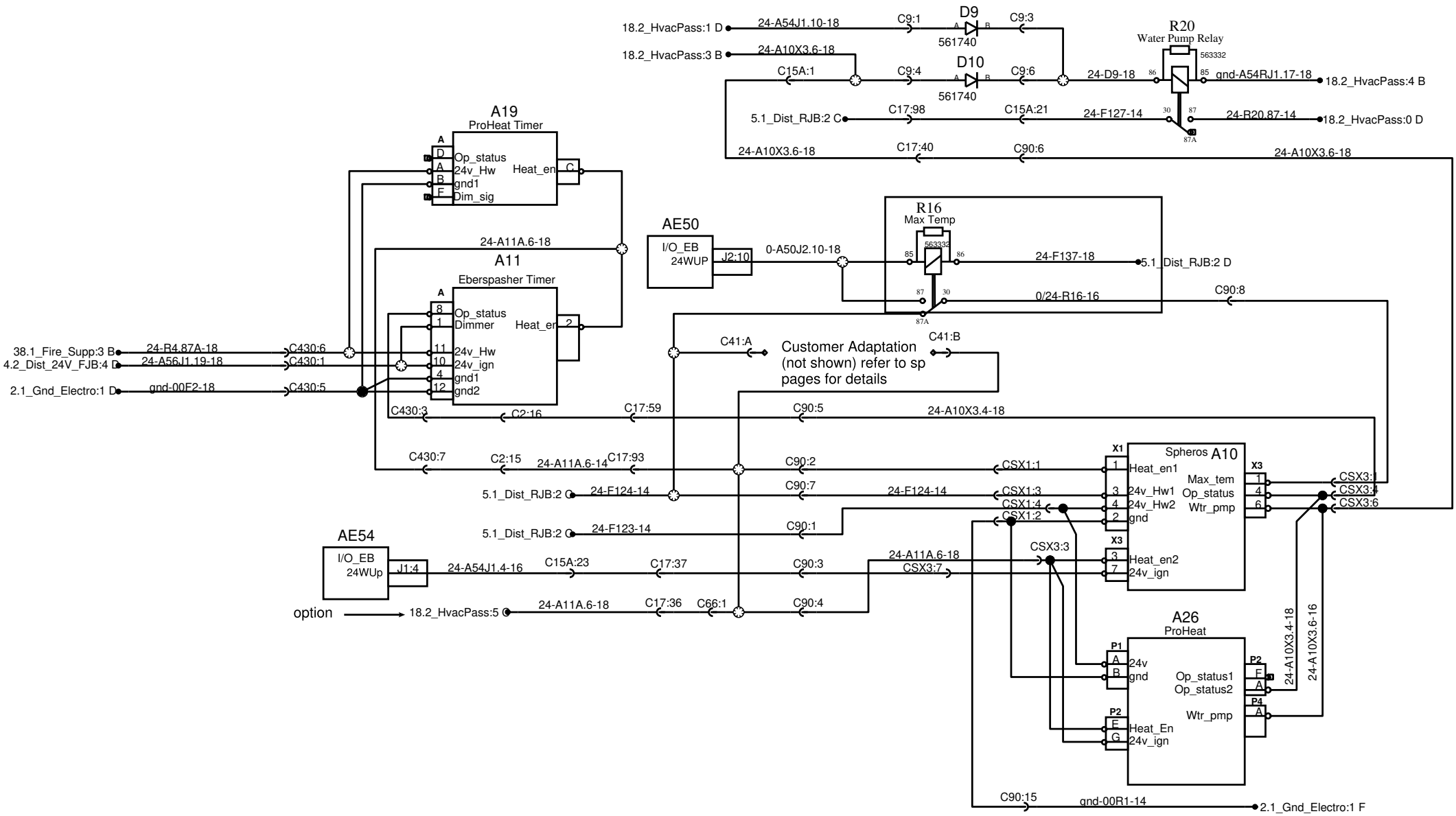

PREVOST®	WIRING DIAGRAM	No:D062140	Page:17.1	Rev:3

Hvac Defroster

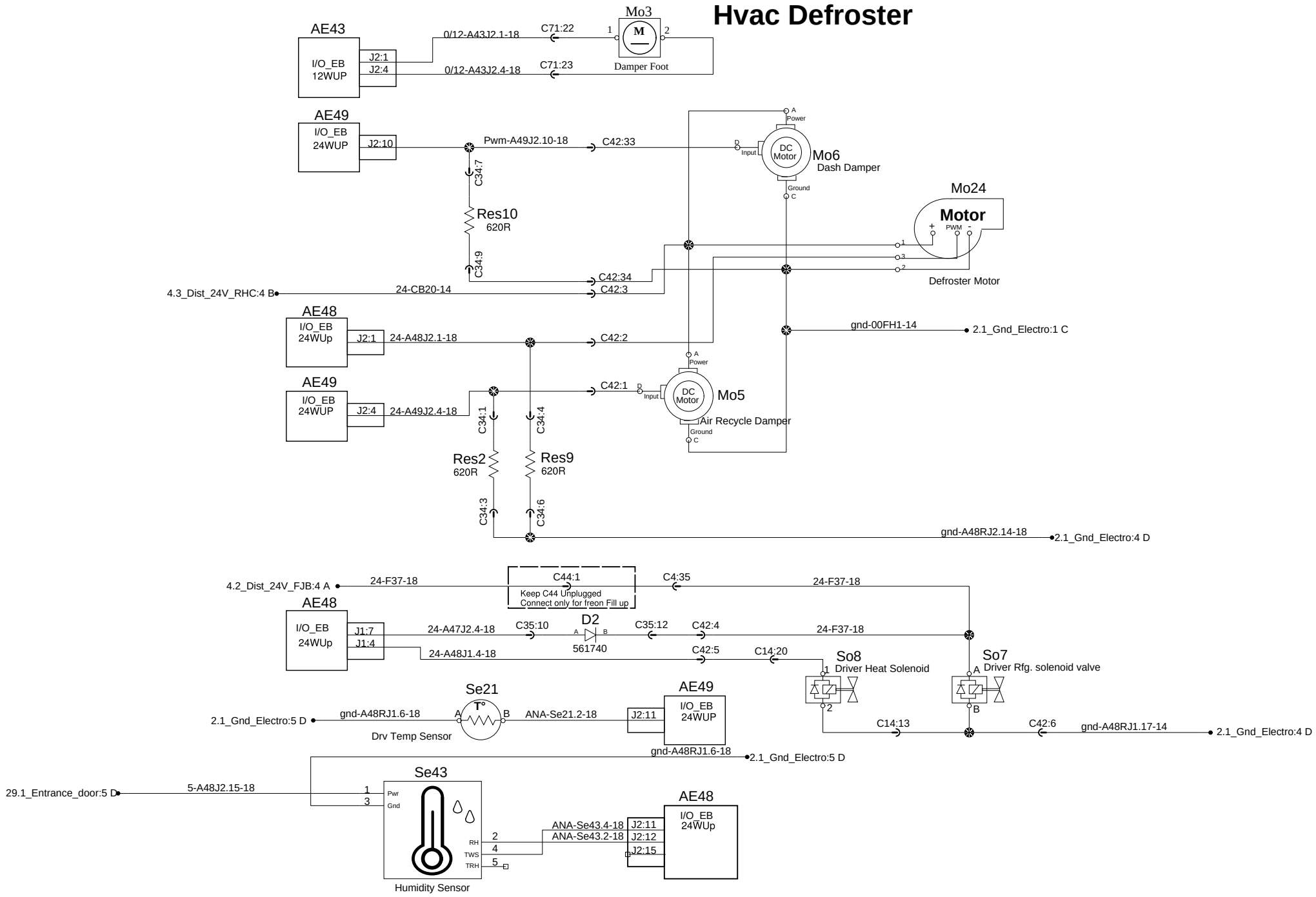

PREVOST®	WIRING DIAGRAM	No:D062140	Page:18.1	Rev:0

Hvac passengers

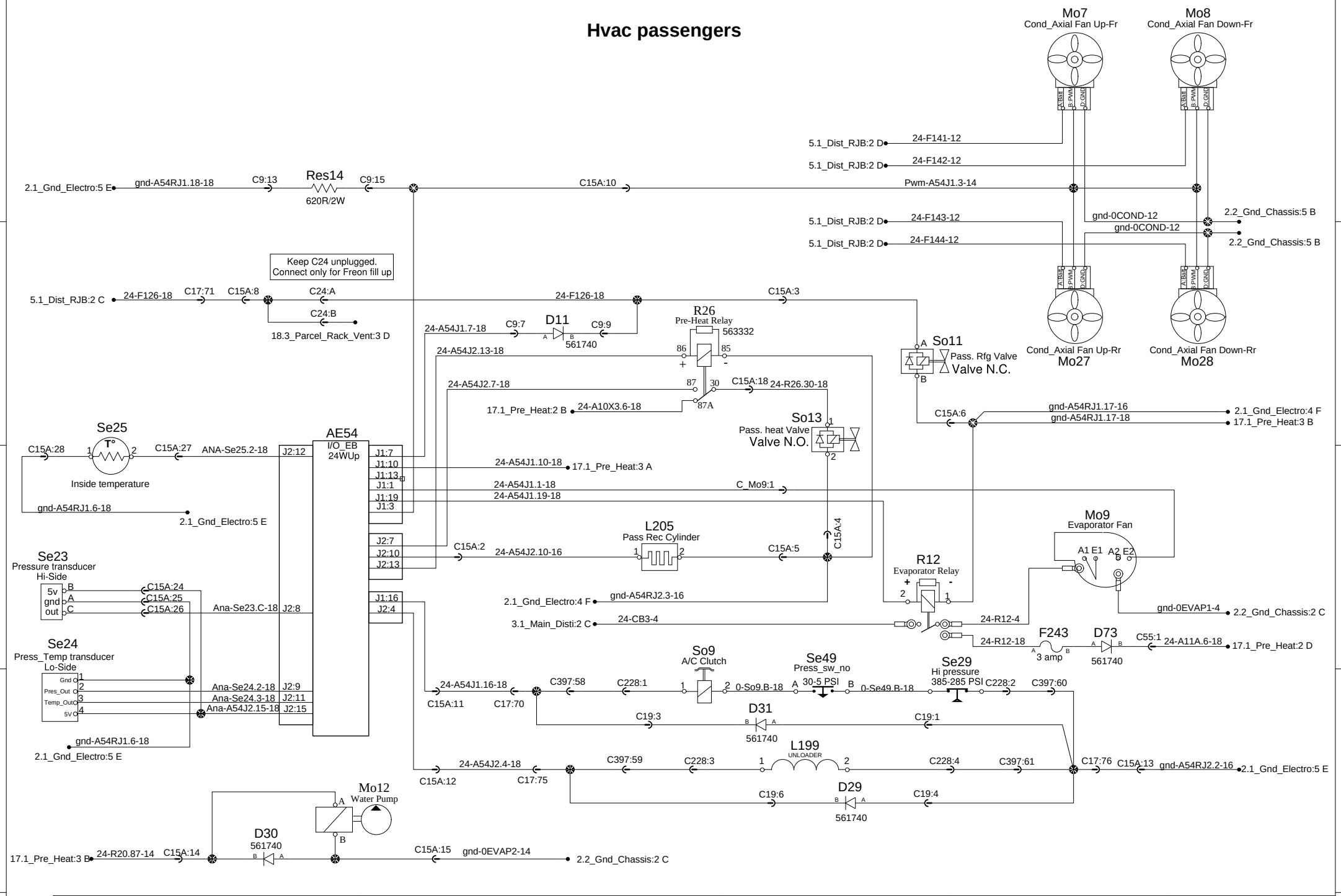

PREVOST®	WIRING DIAGRAM	No:D062140	Page:18.2	Rev:0

Parcel rack A/C system

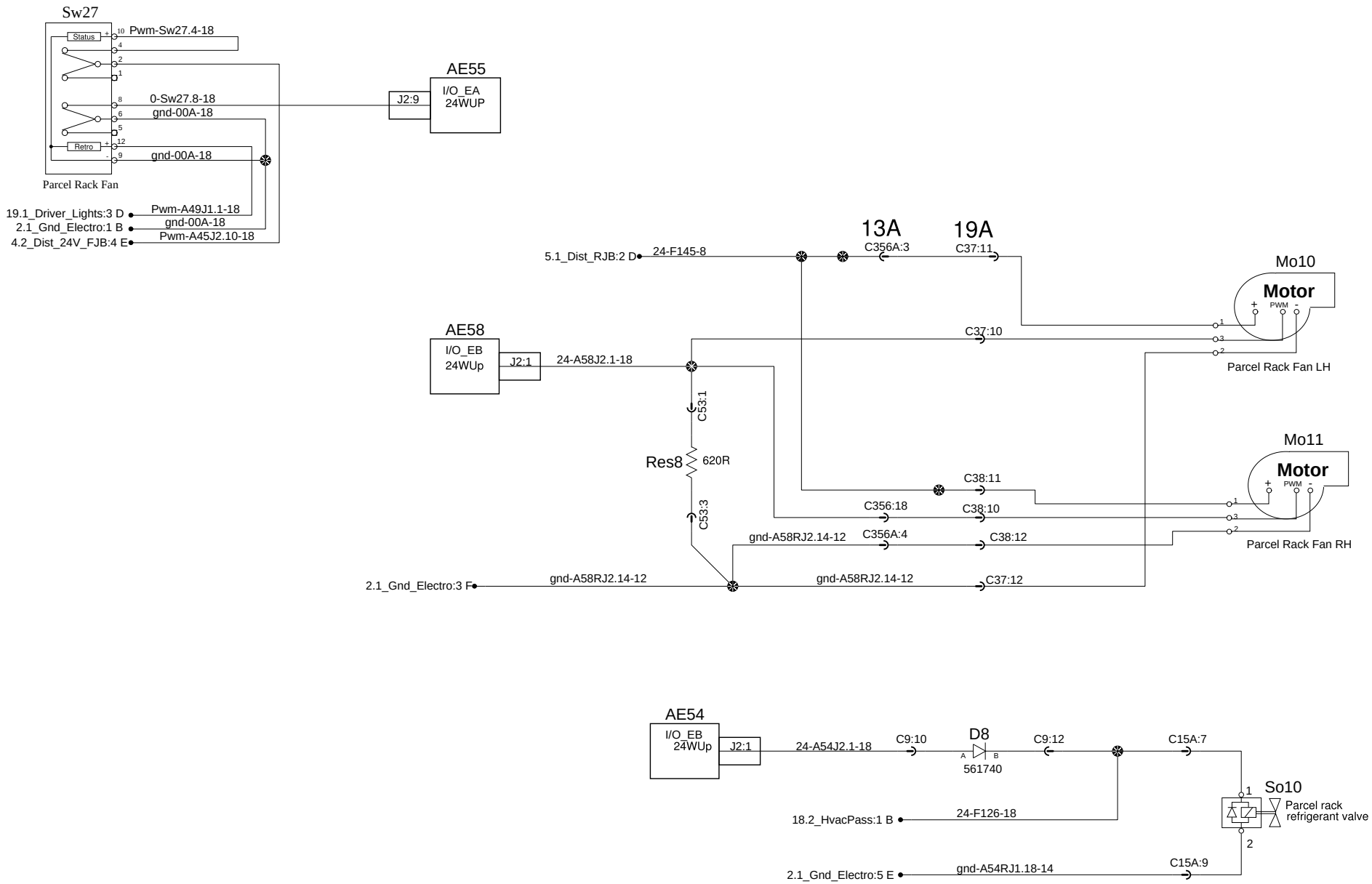

PREVOST®	WIRING DIAGRAM	No:D062140	Page:18.3	Rev:0

Roof Hatches with fan

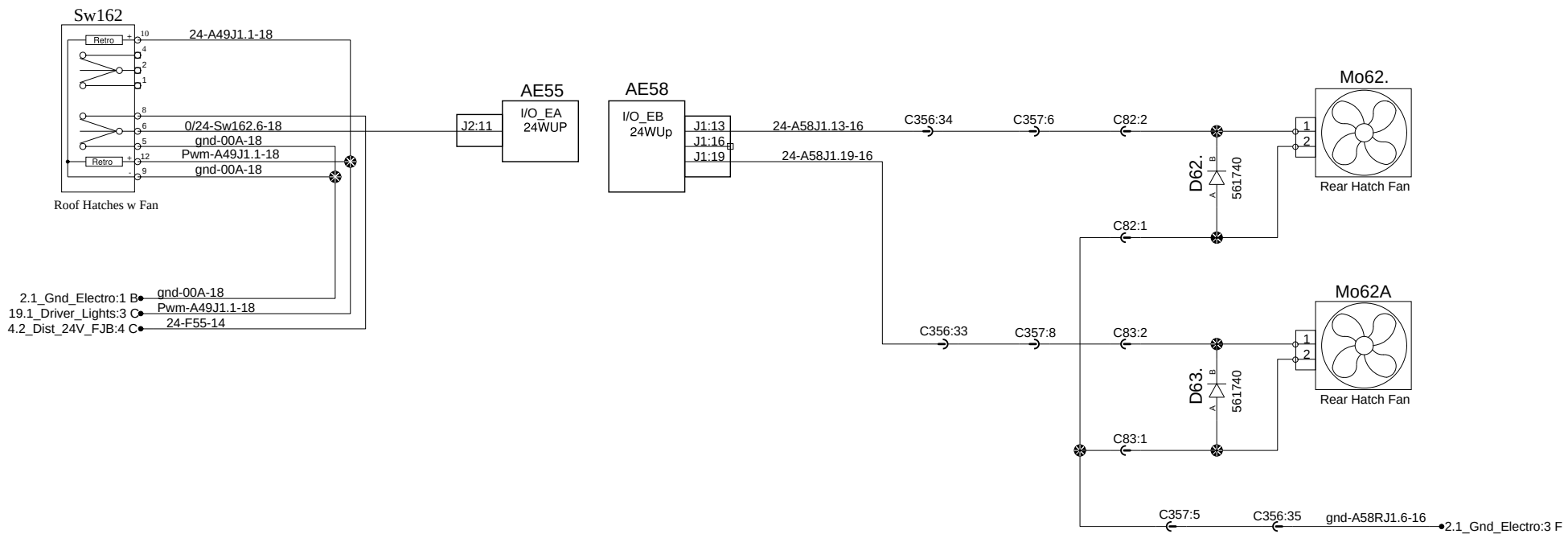

PREVOST®	WIRING DIAGRAM	No:D062140	Page:18.5	Rev:0

Driver lights

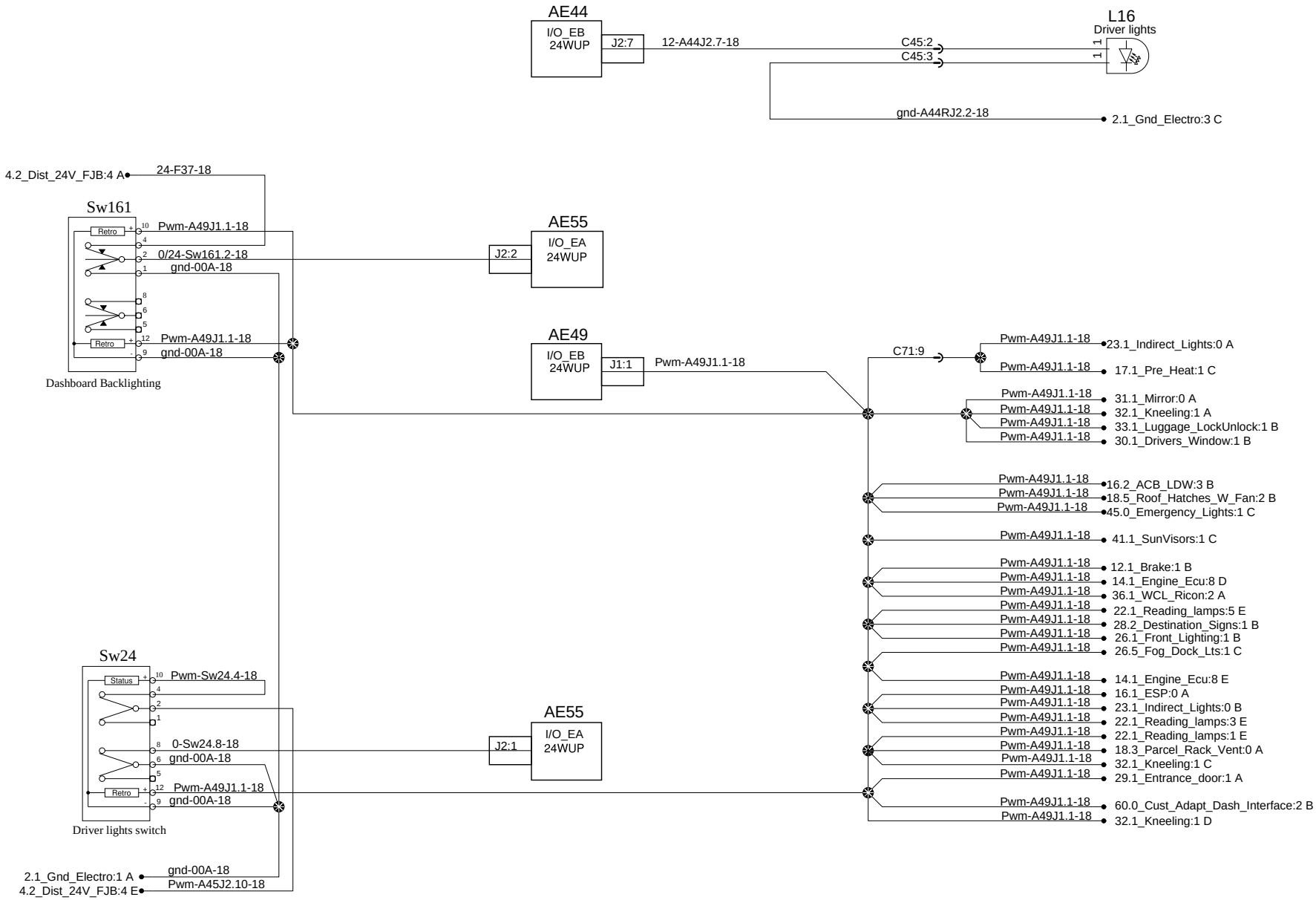

PREVOST®	WIRING DIAGRAM	No:D062140	Page:19.1	Rev:0

Aisle lights

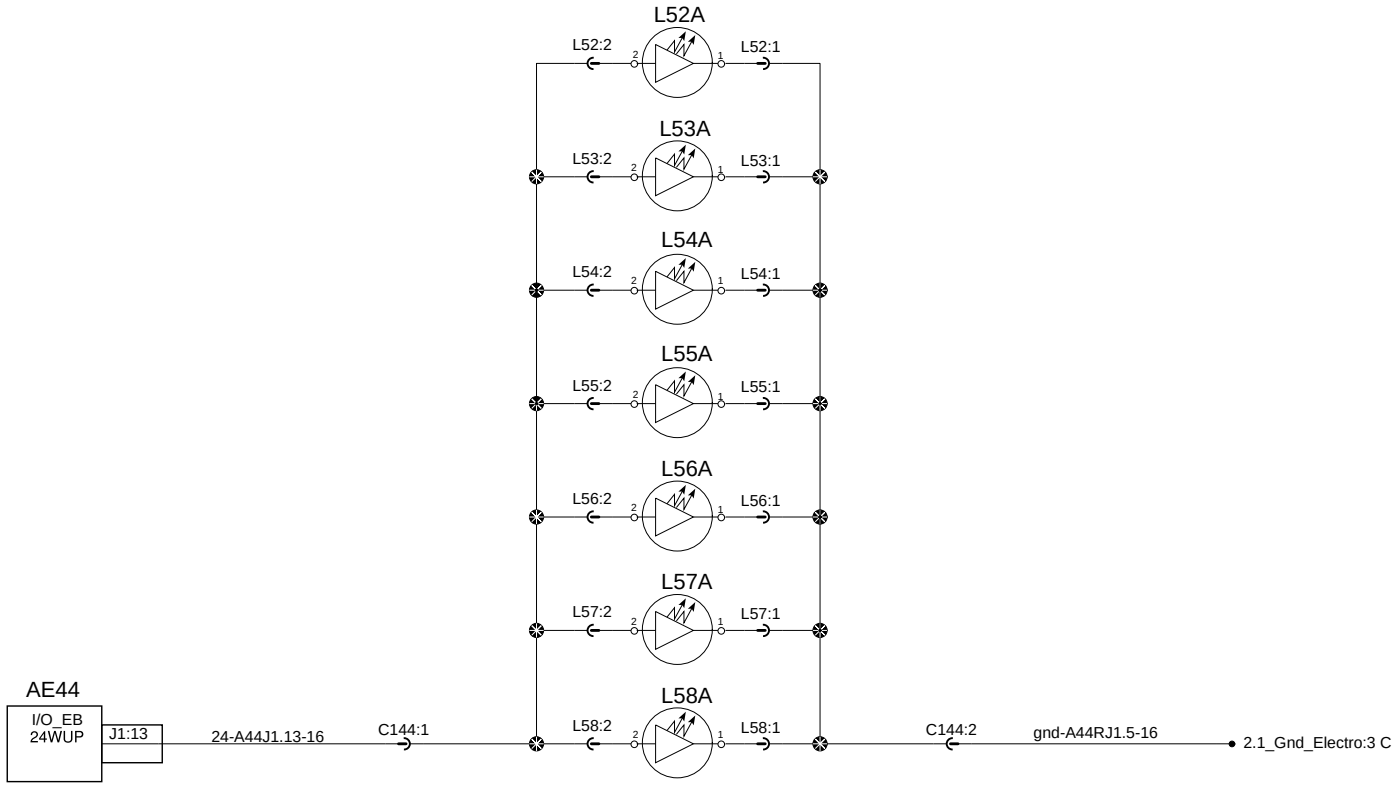

PREVOST®	WIRING DIAGRAM	No:D062140	Page:20.1	Rev:0

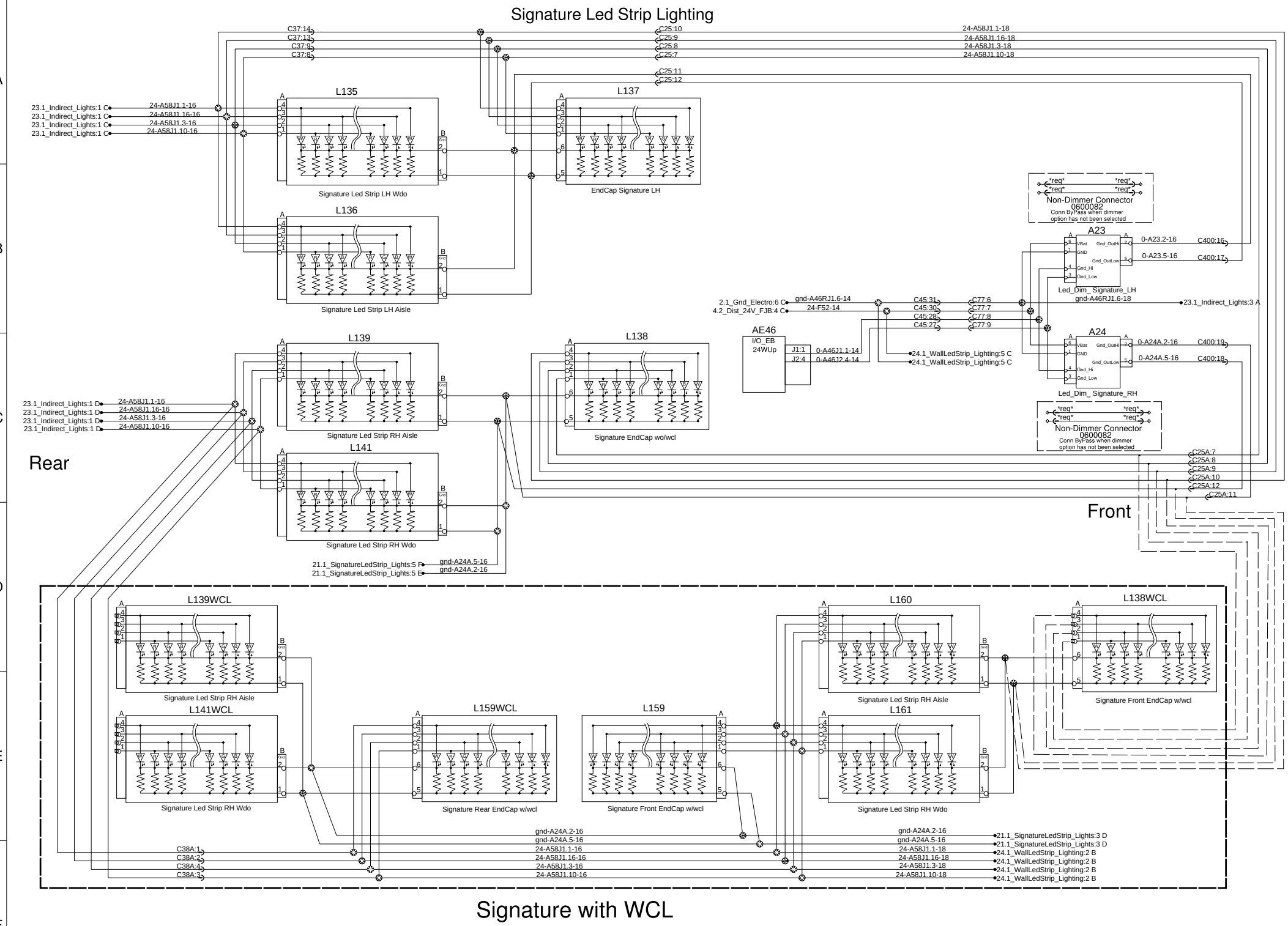
Signature Led Strip Lighting
C37:14
C37:13
C37:9
C37:8
C25:10
C25:9
C25:8
C25:7
C25:11
C25:12
24-A58J1.1-18
24-A58J1.16-18
24-A58J1.3-18
24-A58J1.10-18
23.1_Indirect_Lights:1 C
24-A58J1.1-16
24-A58J1.16-16
24-A58J1.3-16
24-A58J1.10-16
L135
Signature Led Strip LH Wdo
L136
Signature Led Strip LH Aisle
L137
EndCap Signature LH
req
Non-Dimmer Connector
0600082
Conn ByPass when dimmer
option has not been selected
A23
0-A23.2-16
0-A23.5-16
C400:16
C400:17
Led_Dim_ Signature_LH
gnd-A46RJ1.6-18
23.1_Indirect_Lights:3 A
2.1_Gnd_Electro:6 C
4.2_Dist_24V_FJB:4 C
gnd-A46RJ1.6-14
24-F52-14
C45:31
C45:30
C45:28
C45:27
C77:6
C77:7
C77:8
C77:9
AE46
I/O_EB
24WUp
J1:1
J2:4
0-A46J1.1-14
0-A46J2.4-14
24.1_WallLedStrip_Lighting:5 C
24.1_WallLedStrip_Lighting:5 C
A24
0-A24A.2-16
0-A24A.5-16
C400:19
C400:18
Led_Dim_ Signature_RH
23.1_Indirect_Lights:1 D
24-A58J1.1-16
24-A58J1.16-16
24-A58J1.3-16
24-A58J1.10-16
L139
Signature Led Strip RH Aisle
L138
Signature EndCap wo/wcl
Rear
L141
Signature Led Strip RH Wdo
C25A:7
C25A:8
C25A:9
C25A:10
C25A:12
C25A:11
Front
21.1_SignatureLedStrip_Lights:5 F
21.1_SignatureLedStrip_Lights:5 E
gnd-A24A.5-16
gnd-A24A.2-16
L139WCL
Signature Led Strip RH Aisle
L141WCL
Signature Led Strip RH Wdo
L159WCL
Signature Rear EndCap w/wcl
L159
Signature Front EndCap w/wcl
L160
Signature Led Strip RH Aisle
L161
Signature Led Strip RH Wdo
L138WCL
Signature Front EndCap w/wcl
C38A:1
C38A:2
C38A:4
C38A:3
gnd-A24A.2-16
gnd-A24A.5-16
24-A58J1.1-16
24-A58J1.16-16
24-A58J1.3-16
24-A58J1.10-16
24-A58J1.1-18
24-A58J1.16-18
24-A58J1.3-18
24-A58J1.10-18
21.1_SignatureLedStrip_Lights:3 D
24.1_WallLedStrip_Lighting:2 B
Signature with WCL
Rev:0
Page:21.1
No:D062140
WIRING DIAGRAM
PREVOST

Reading lamp and hostess chime with WCL Ricon RH

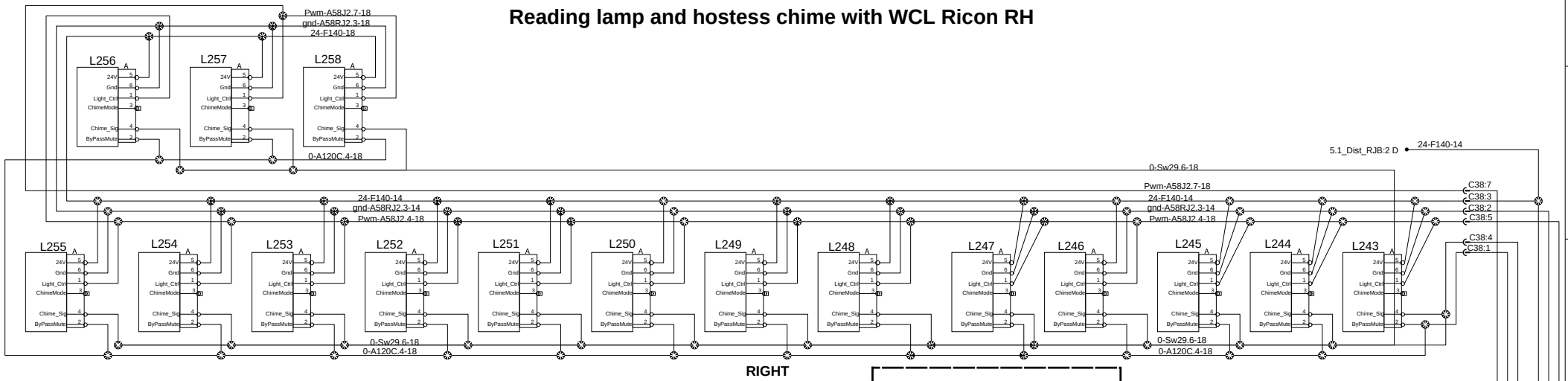

Front

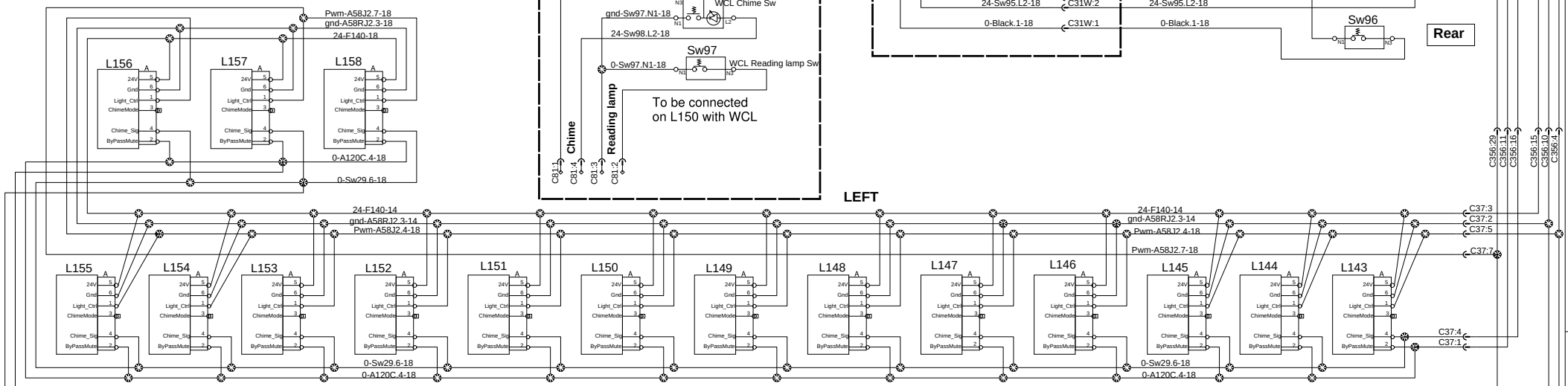

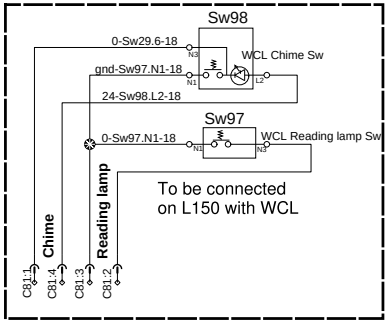

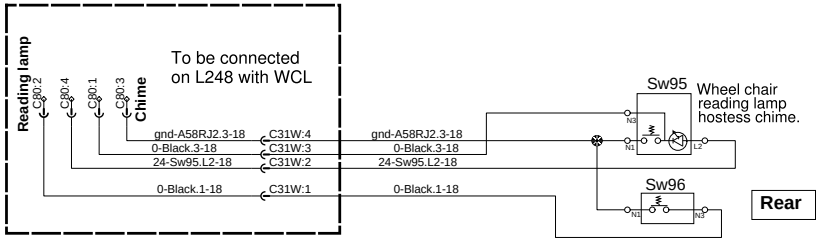

C356:29
C356:11
C356:16
C356:15
C356:10
C356:4

Reading lamp and hostess chime LH

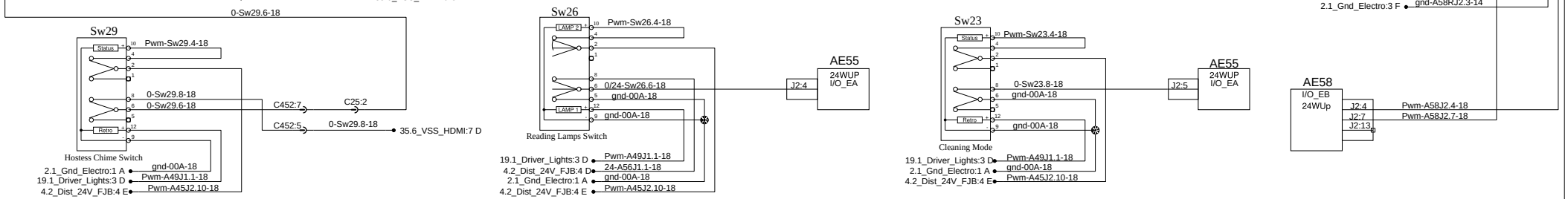

Rev:0

Page:22.1

No:D062140

WIRING DIAGRAM

PREVOST®

Indirect lighting

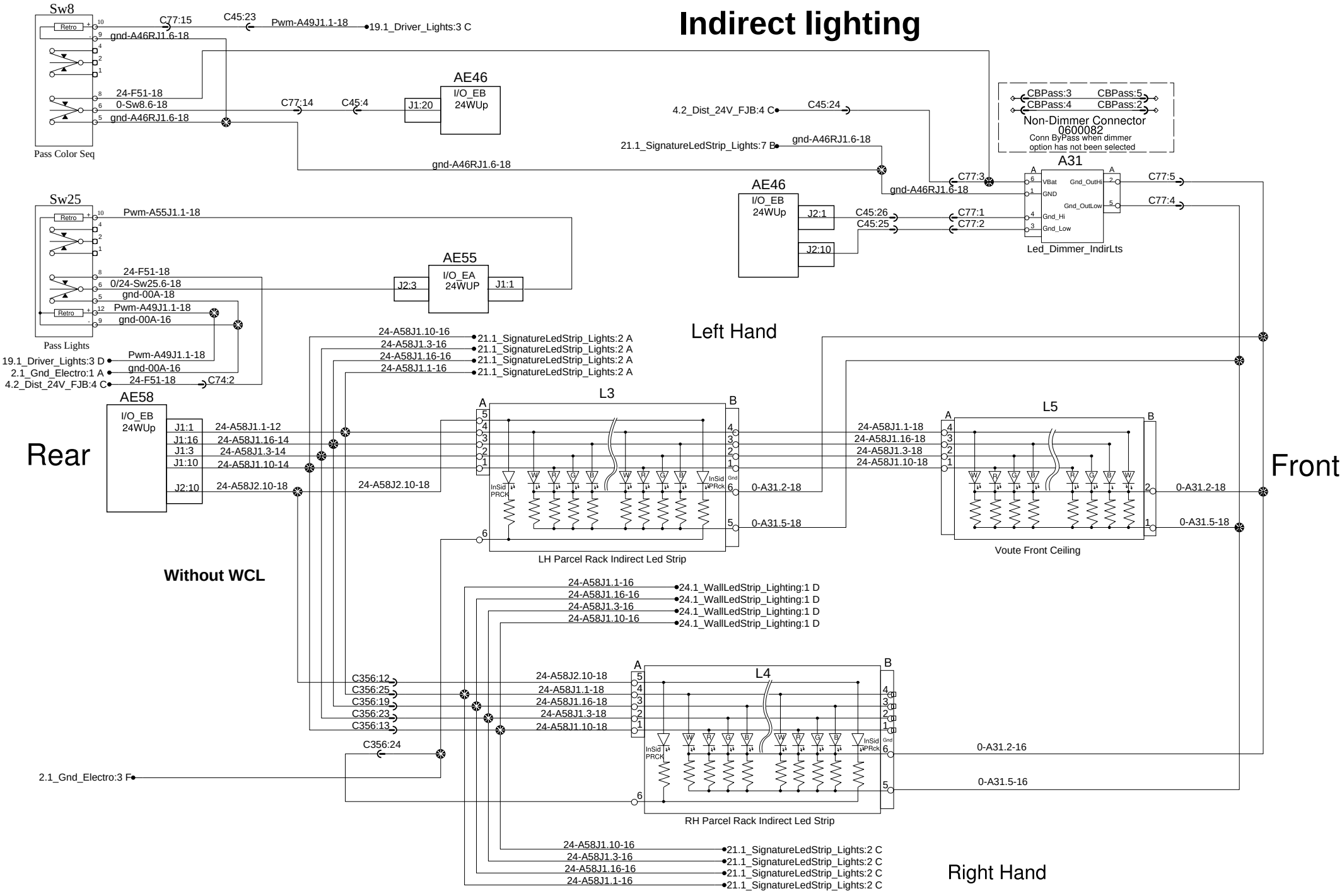

PREVOST®	WIRING DIAGRAM	No:D062140	Page:23.1	Rev:0

Wall Led Srips

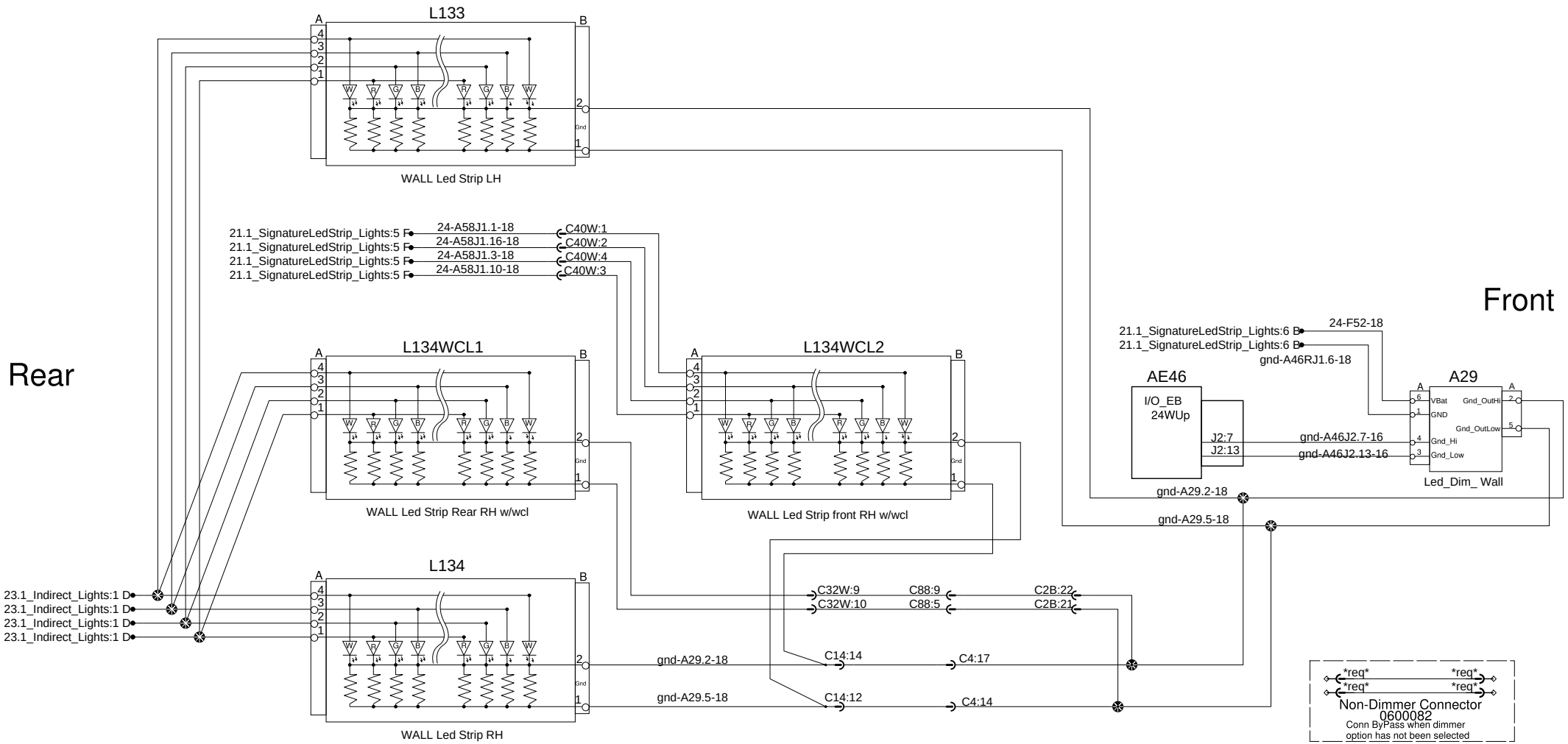

PREVOST®	WIRING DIAGRAM	No:D062140	Page:24.1	Rev:0

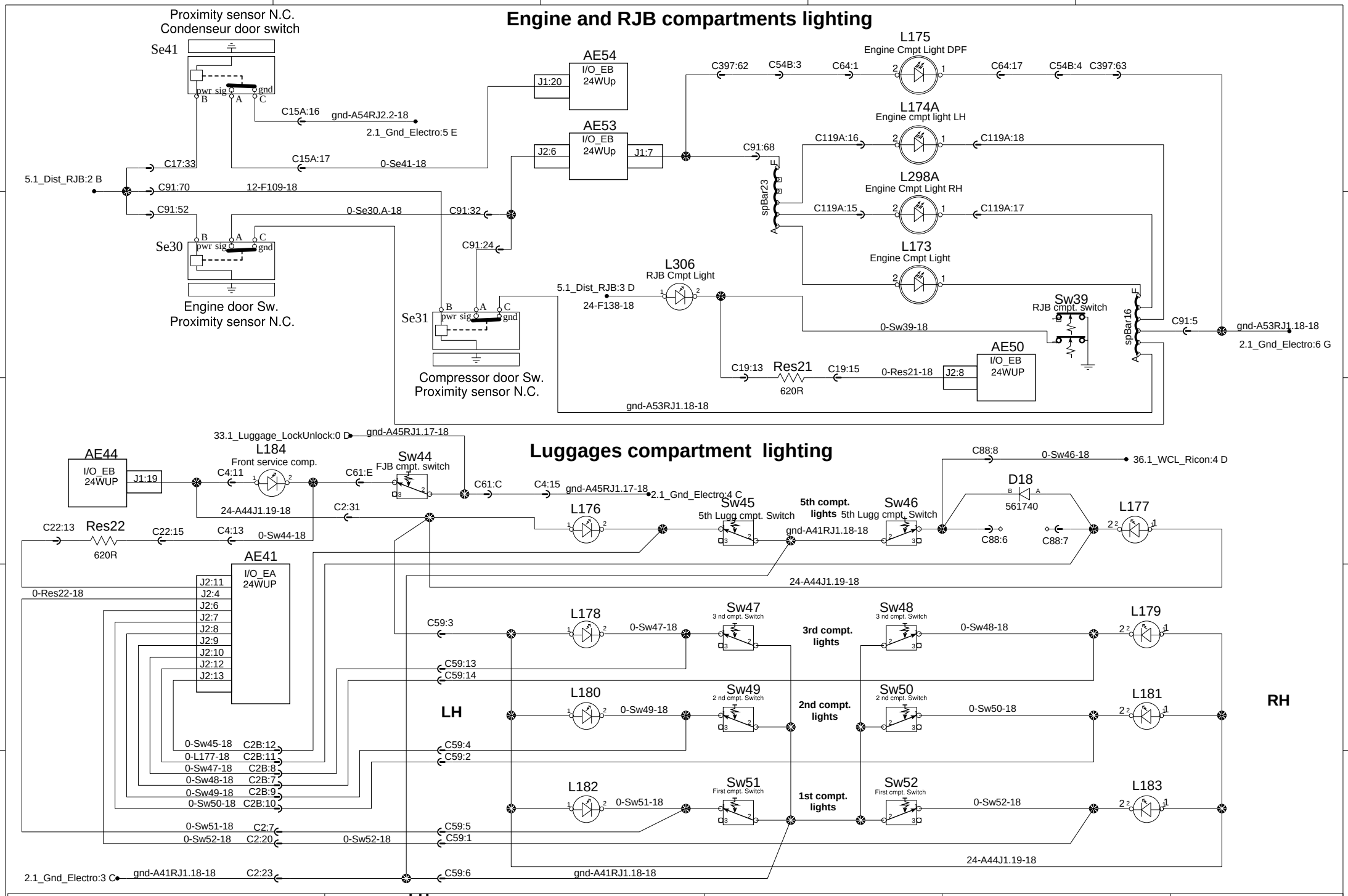

PREVOST®	LH WIRING DIAGRAM	No:D062140	Page:25.1	Rev:0

Cornering, Front flashers, Markers, Clearance and Head lights

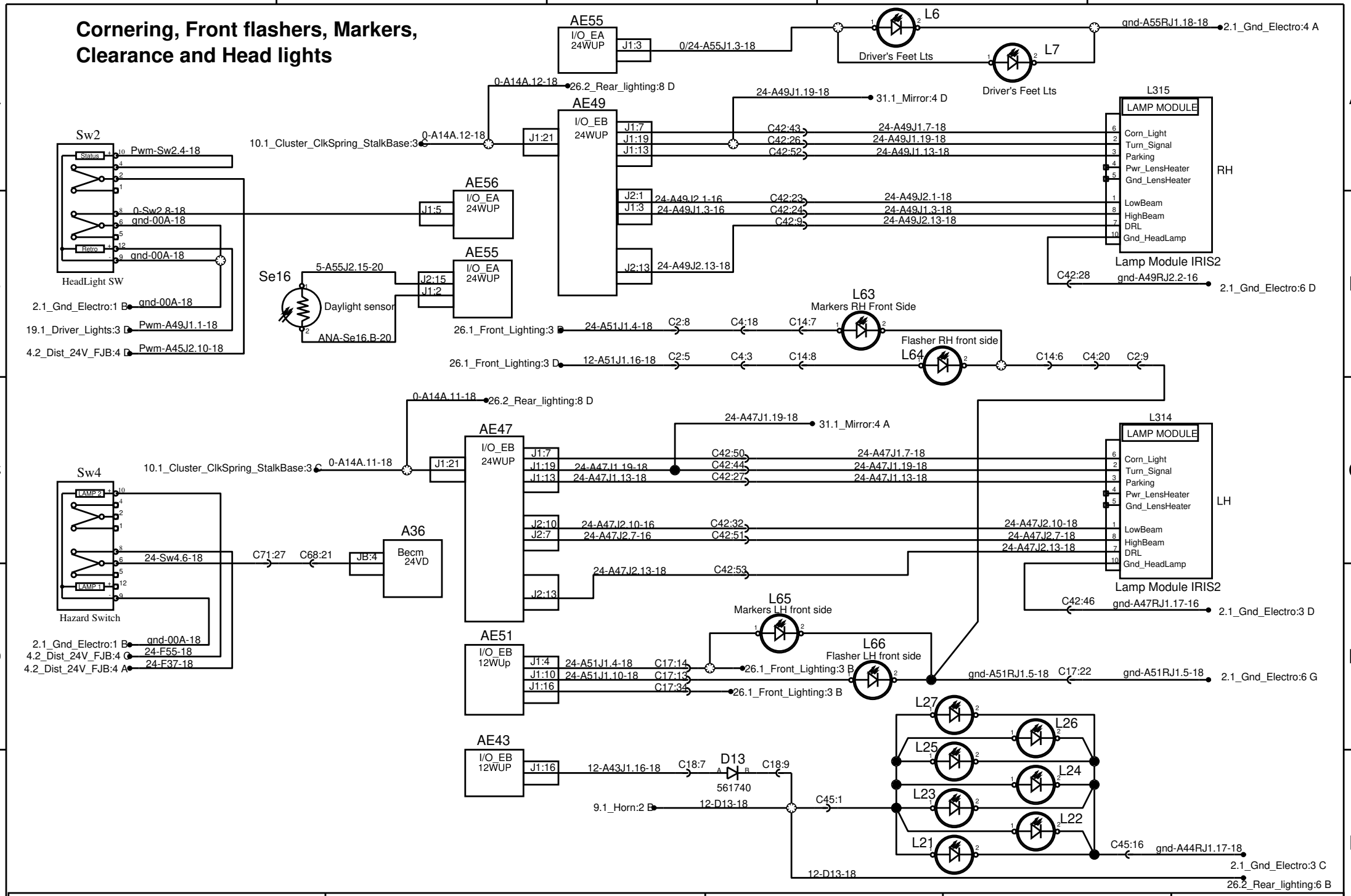

PREVOST®	WIRING DIAGRAM	No:D062140	Page:26.1	Rev:3

Rear flashers, Markers, Tail and stop lights

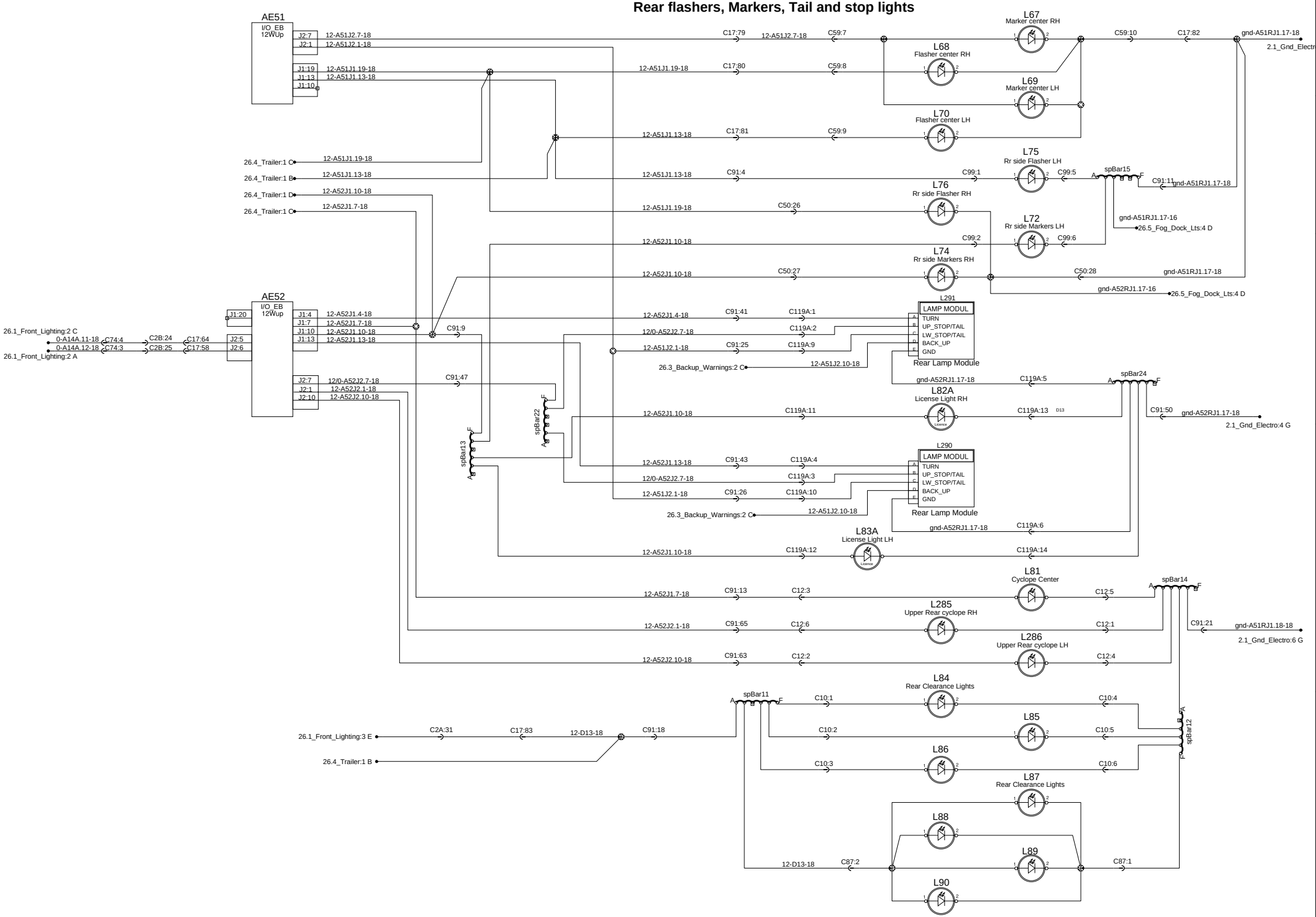

Rev:0

Page:26.2

No:D062140

WIRING DIAGRAM

PREVOST

Backup warnings

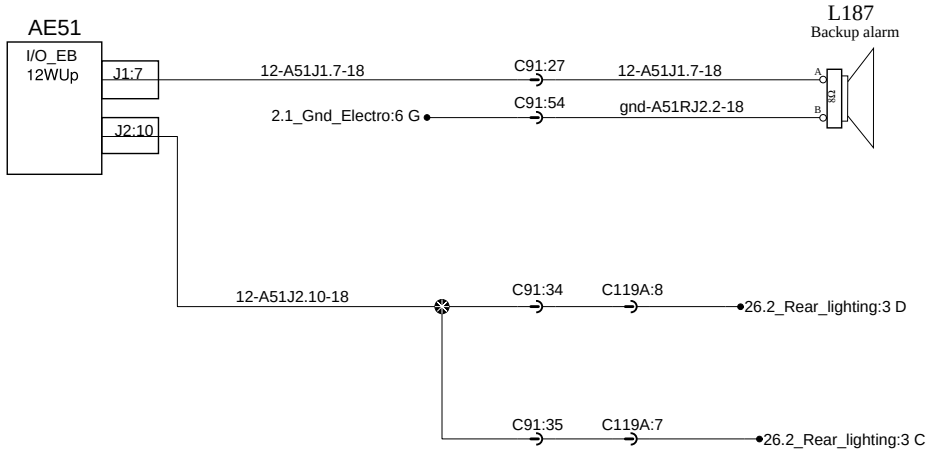

Trailer interface

SAE J560 Standard Trailer socket

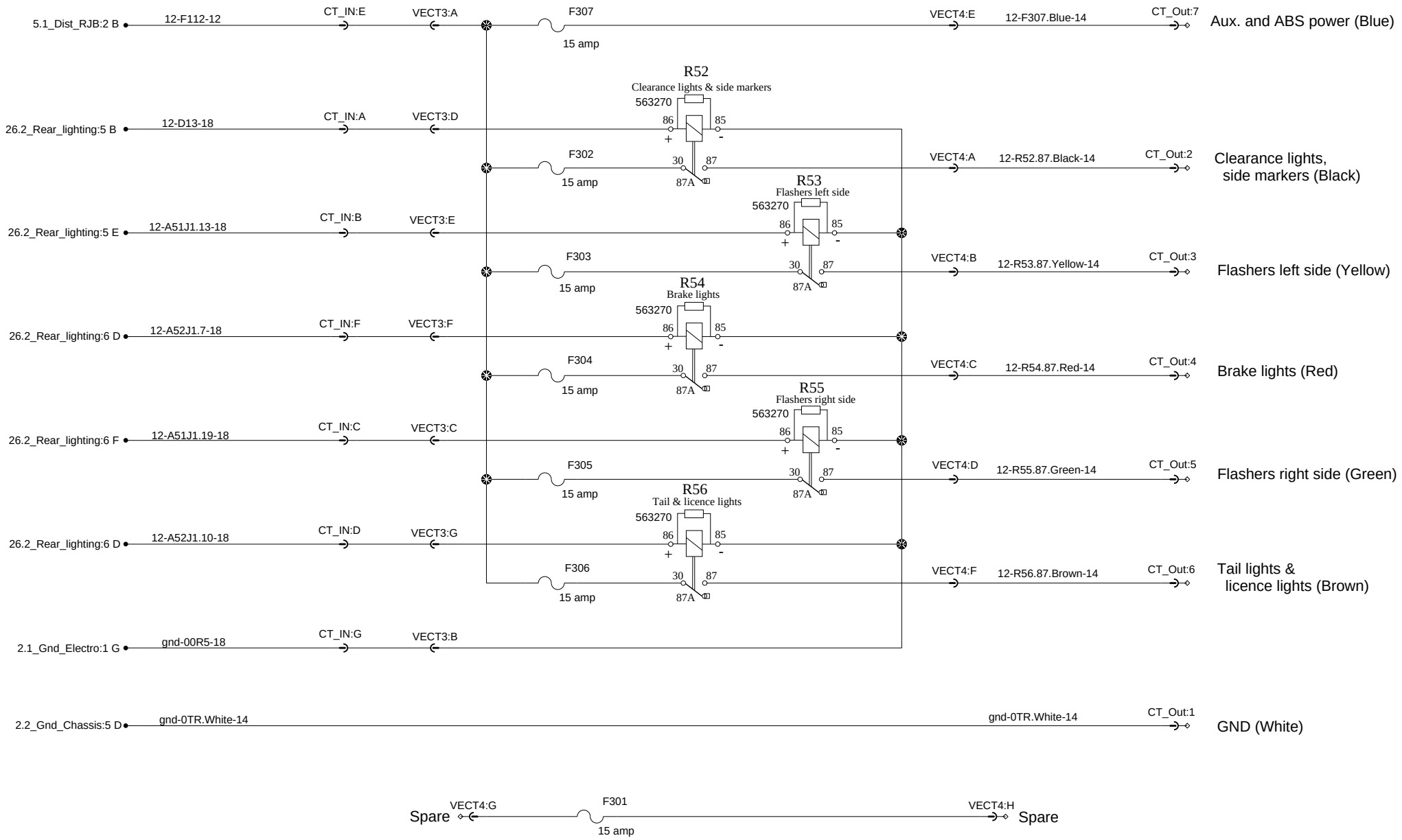

PREVOST®	WIRING DIAGRAM	No:D062140	Page:26.4	Rev:0

Docking and Fog lights (Option)

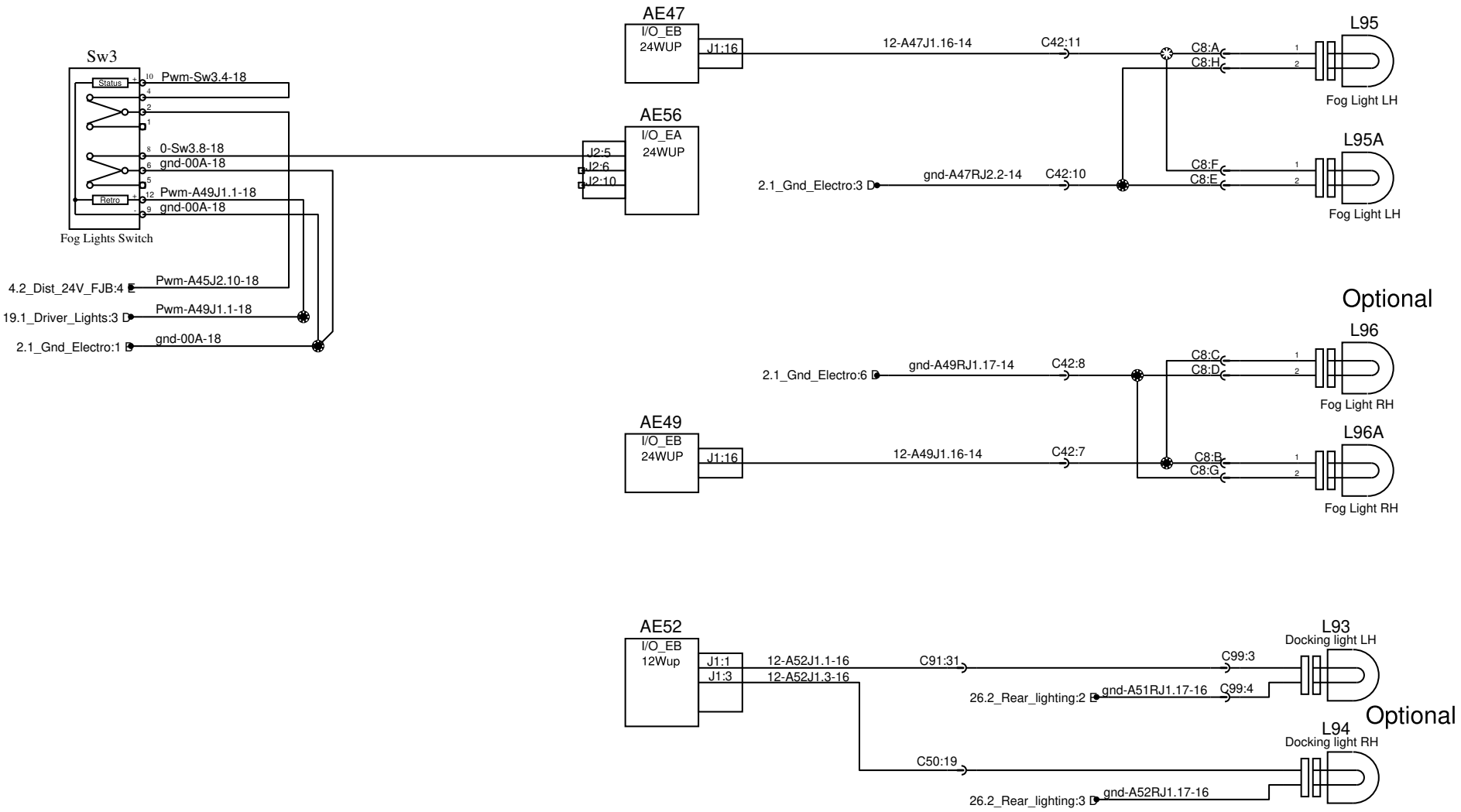

PREVOST®	WIRING DIAGRAM	No:D062140	Page:26.5	Rev:3

Curb lights on both side of the coach

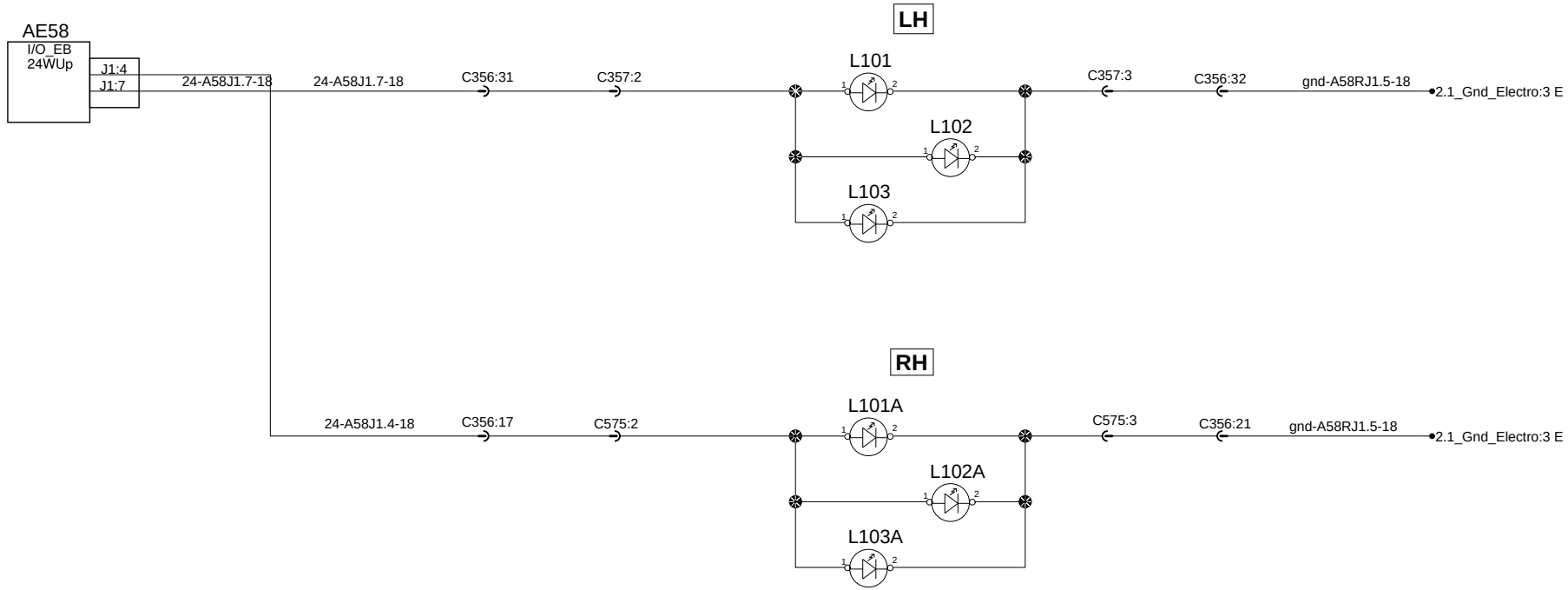

Windows ajar

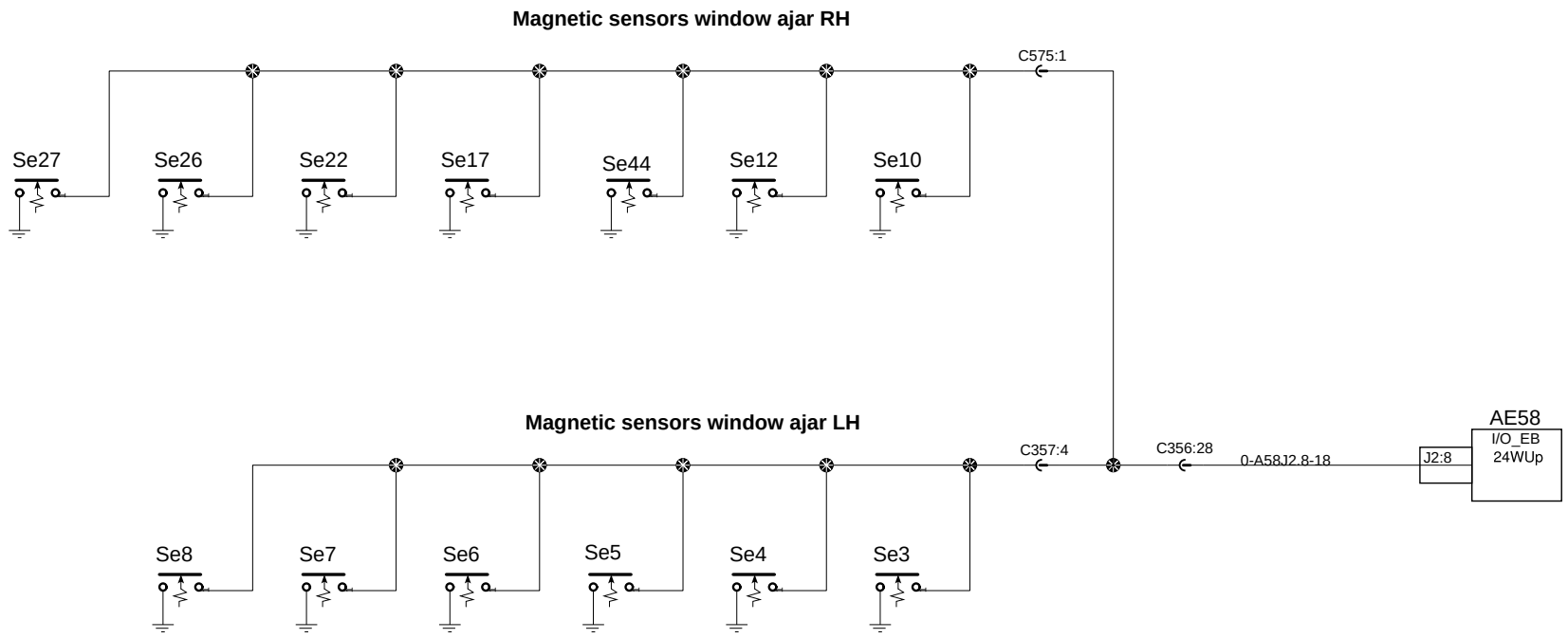

Digital clock & Back-up Camera

12 or 24 hours digital clock

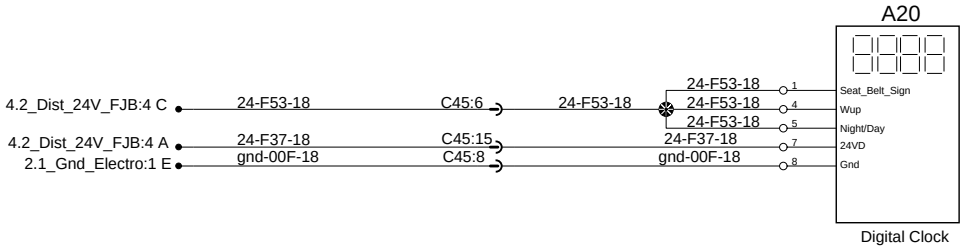

Back-up camera

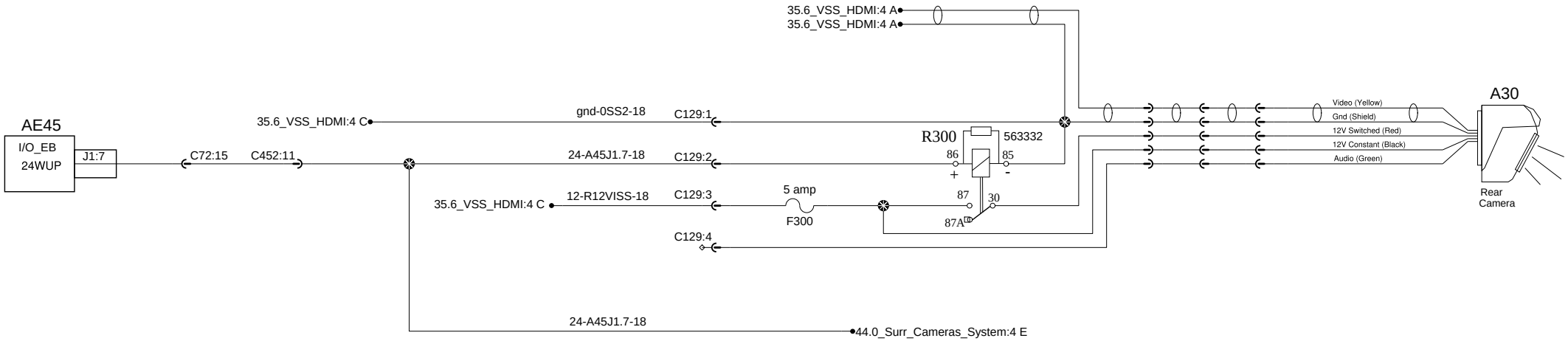

PREVOST®	WIRING DIAGRAM	No:D062140	Page:28.1	Rev:0

Electronic destination signs

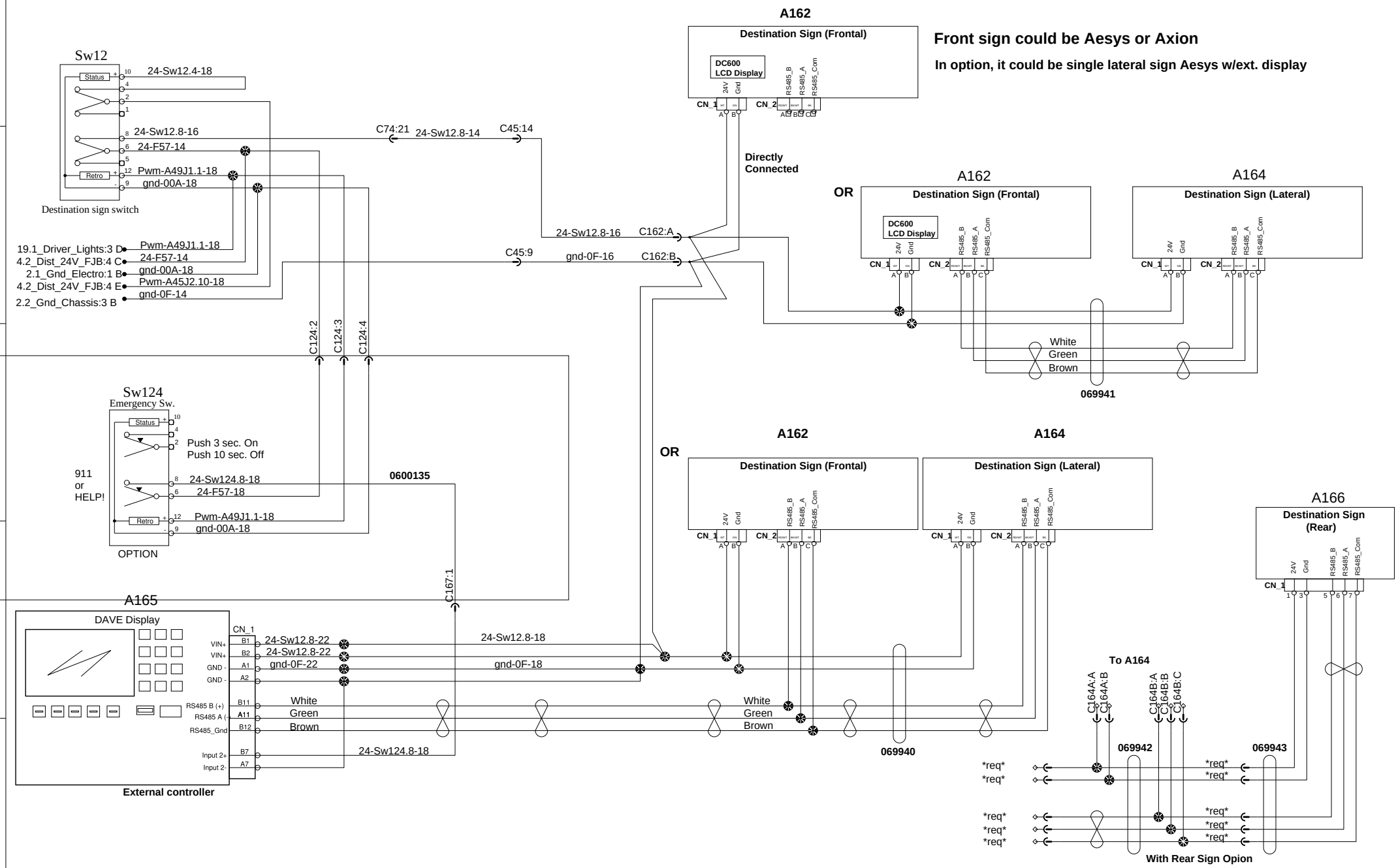

PREVOST®	WIRING DIAGRAM	No:D062140	Page:28.2	Rev:0

Entrance door

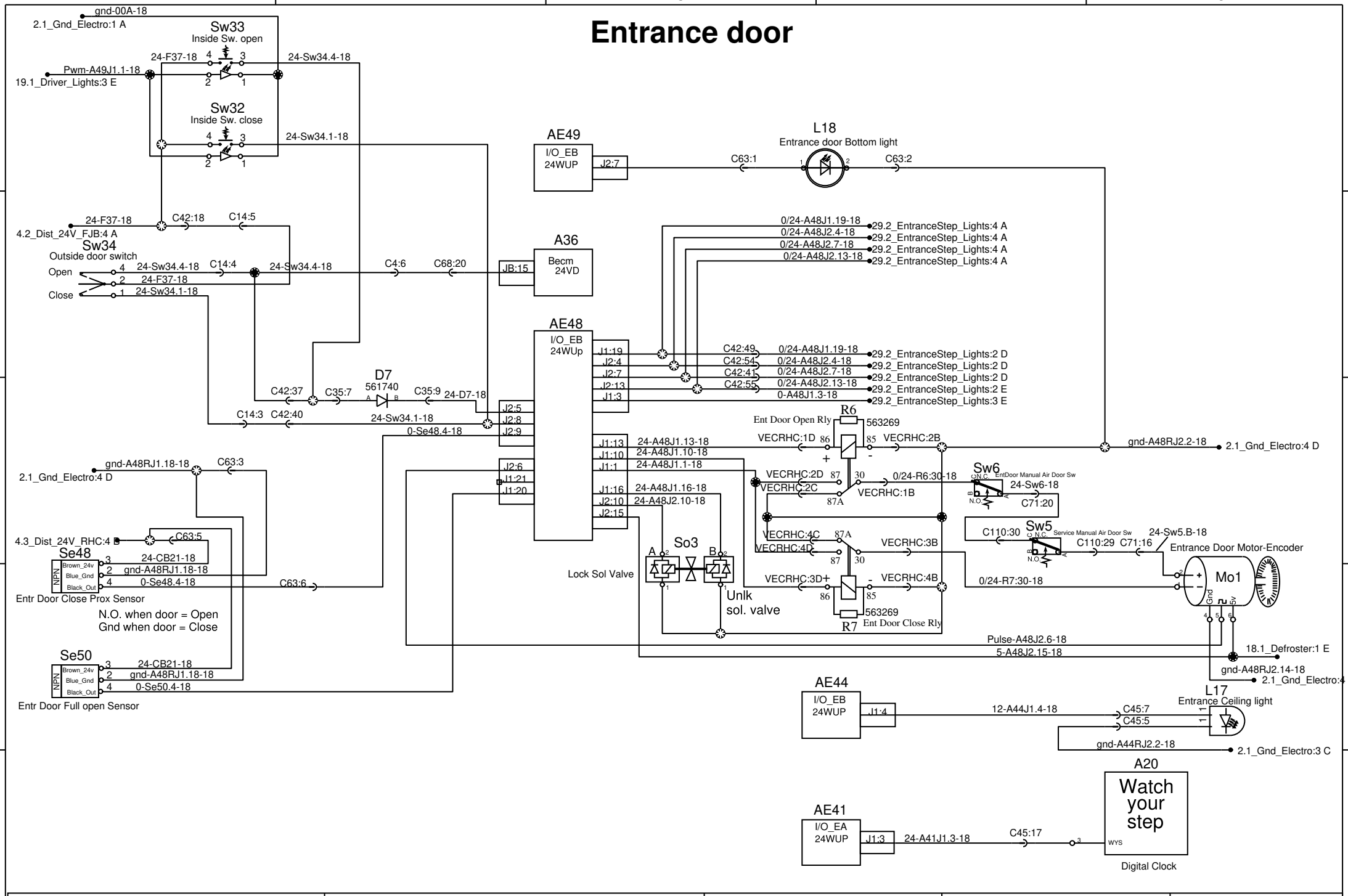

PREVOST®	WIRING DIAGRAM	No:D062140	Page:29.1	Rev:3

Entrance Step lights

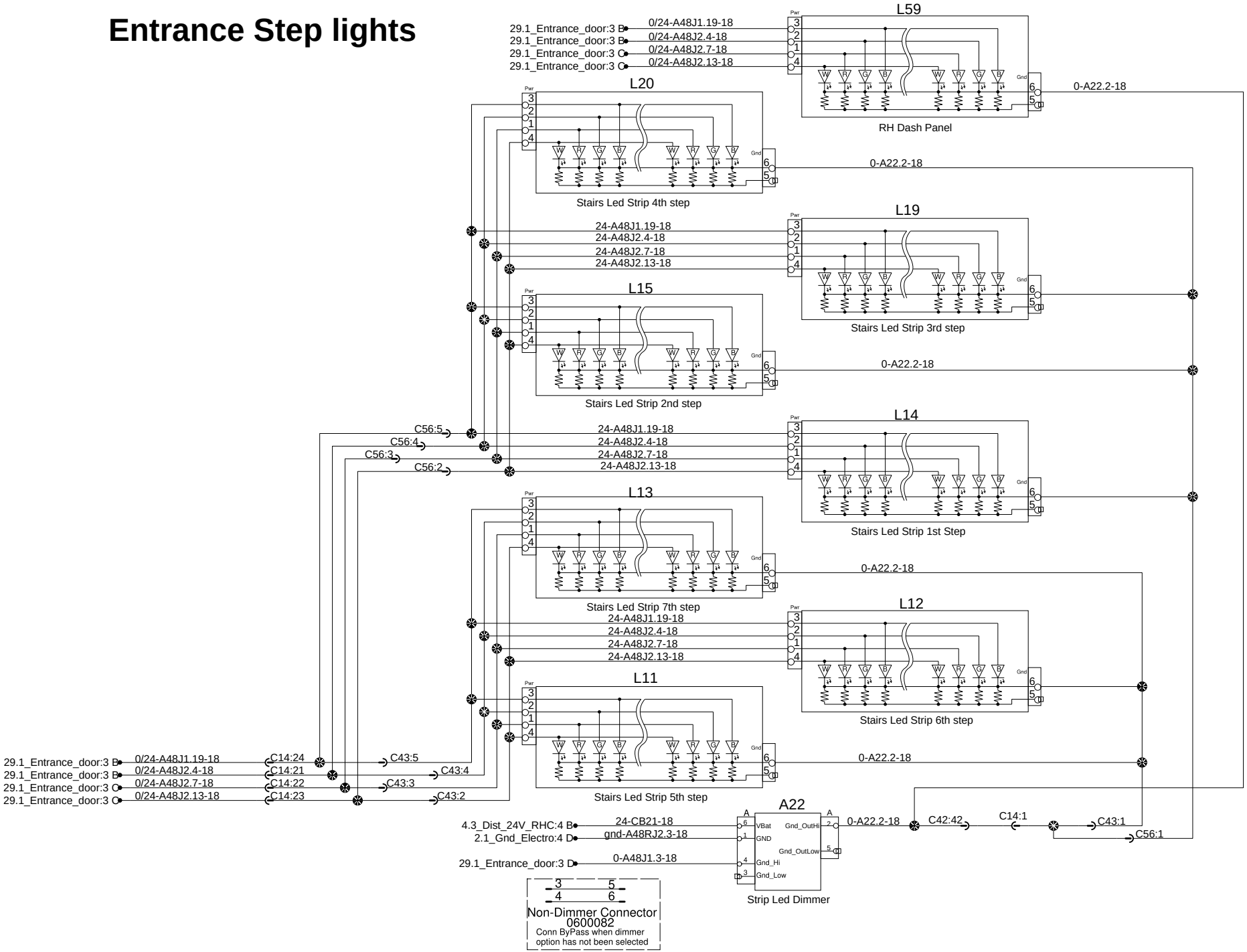

PREVOST®	WIRING DIAGRAM	No:D062140	Page:29.2	Rev:0

Driver Window

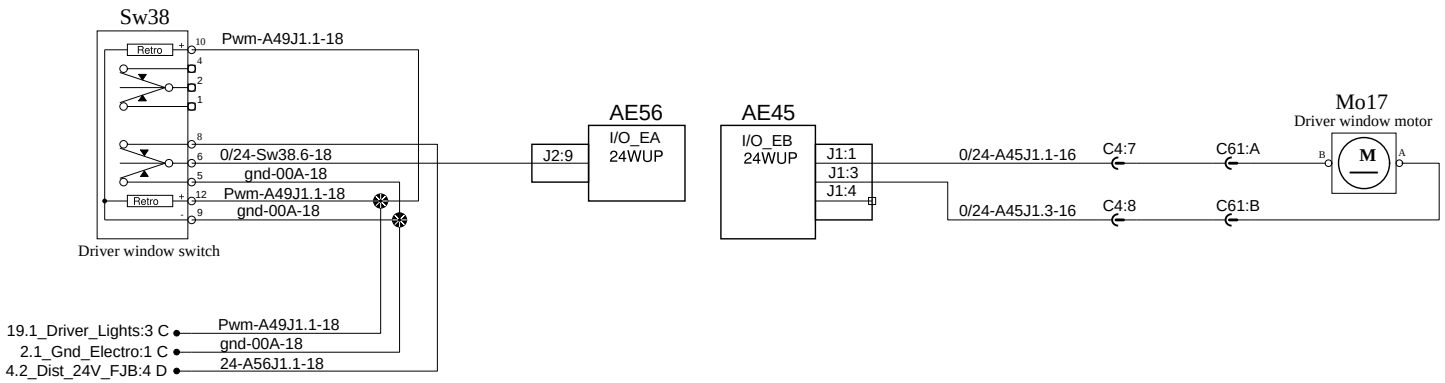

12V Outlets and USB Charger

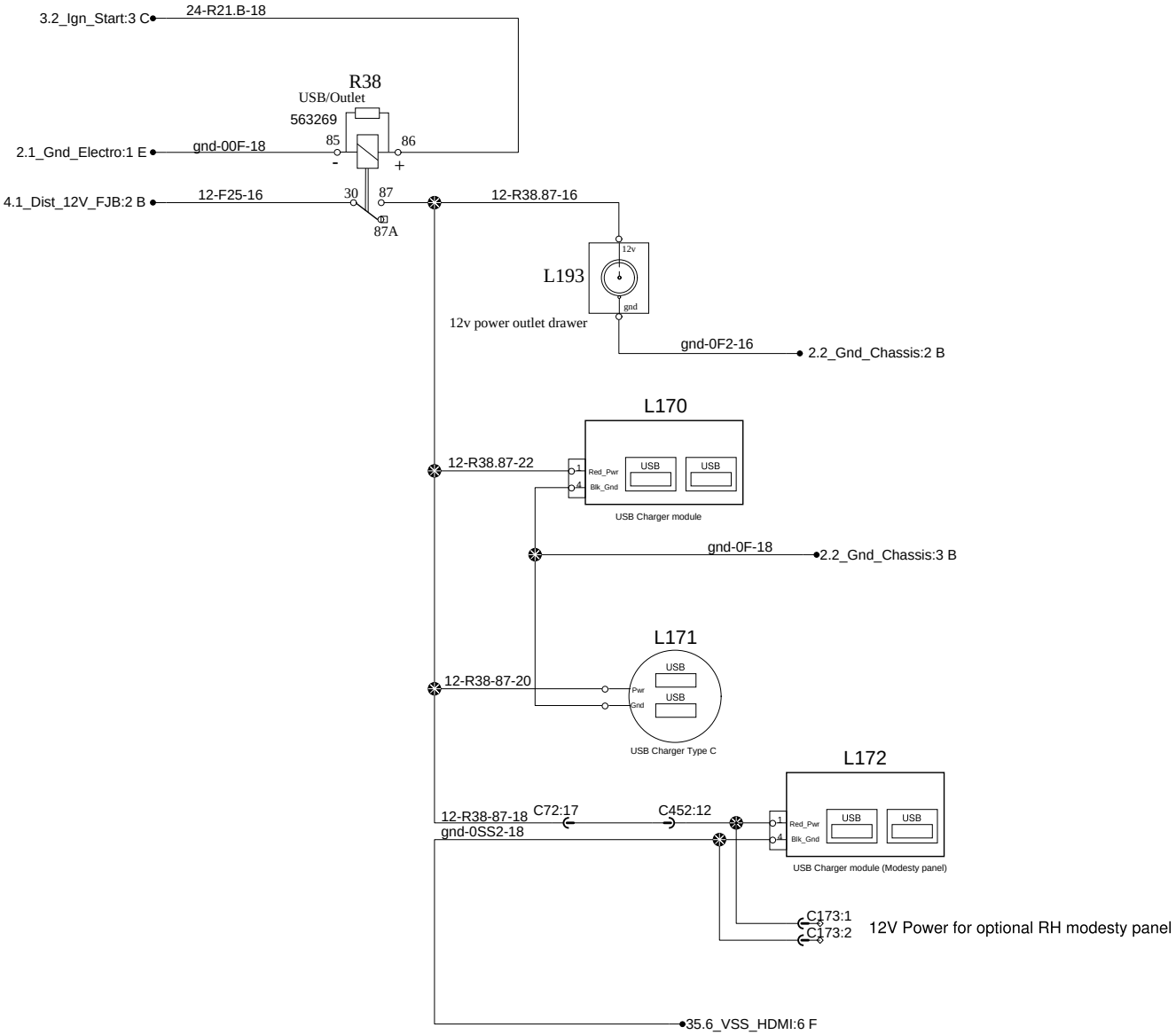

Driver seat with heating function

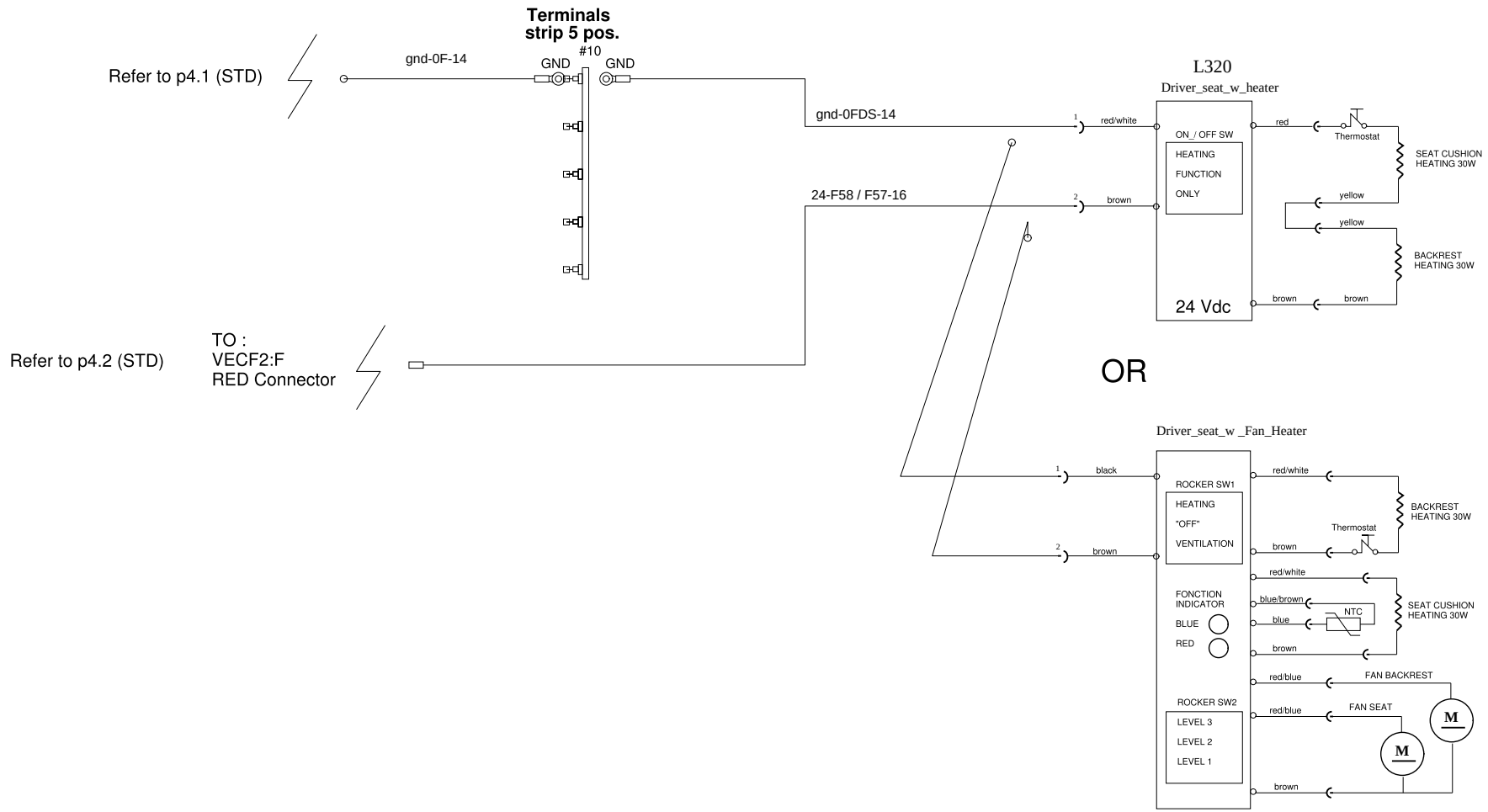

PREVOST®	WIRING DIAGRAM	No:D062140	Page:30.3	Rev:01

Mirrors, 2 adjustments switch and heated

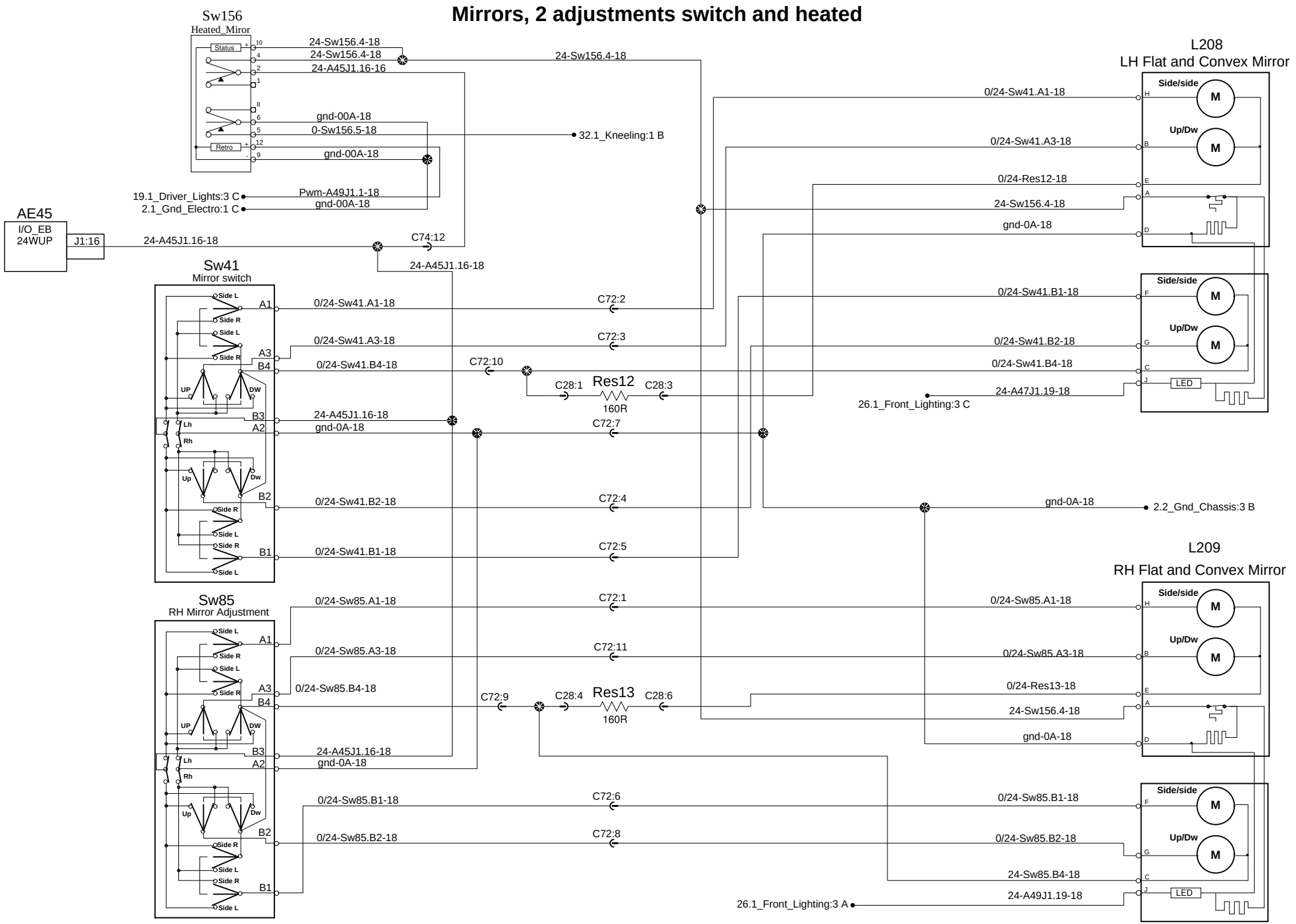

PREVOST®	WIRING DIAGRAM	No:D062140	Page:31.1	Rev:0

Electronic Mirrors (eMirrors)

Info: Mirrors remains ON about 2 minutes after Ignition key turn OFF

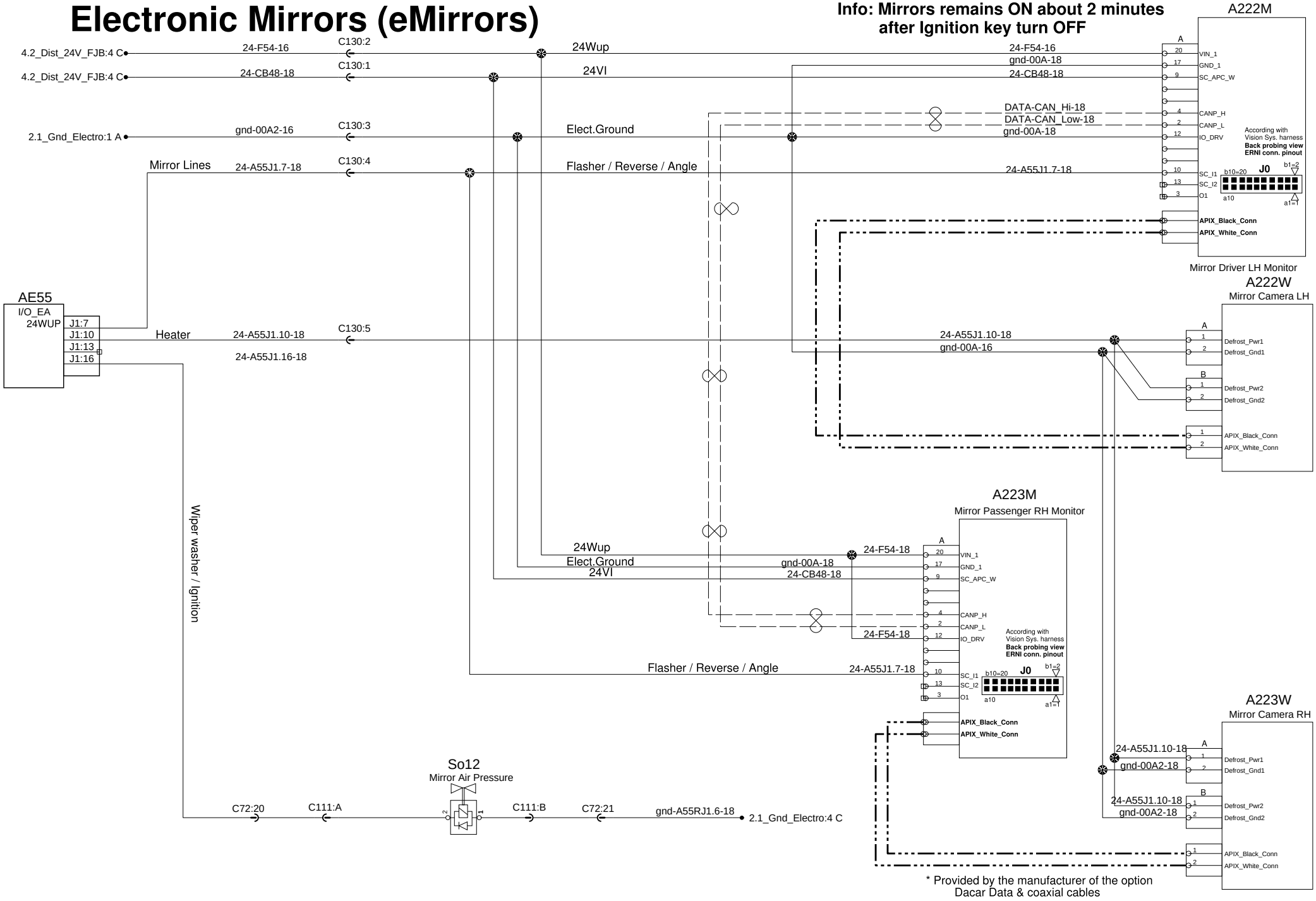

* Provided by the manufacturer of the option
Dacar Data & coaxial cables

PREVOST®	WIRING DIAGRAM	No:D062140	Page:31.2	Rev:0

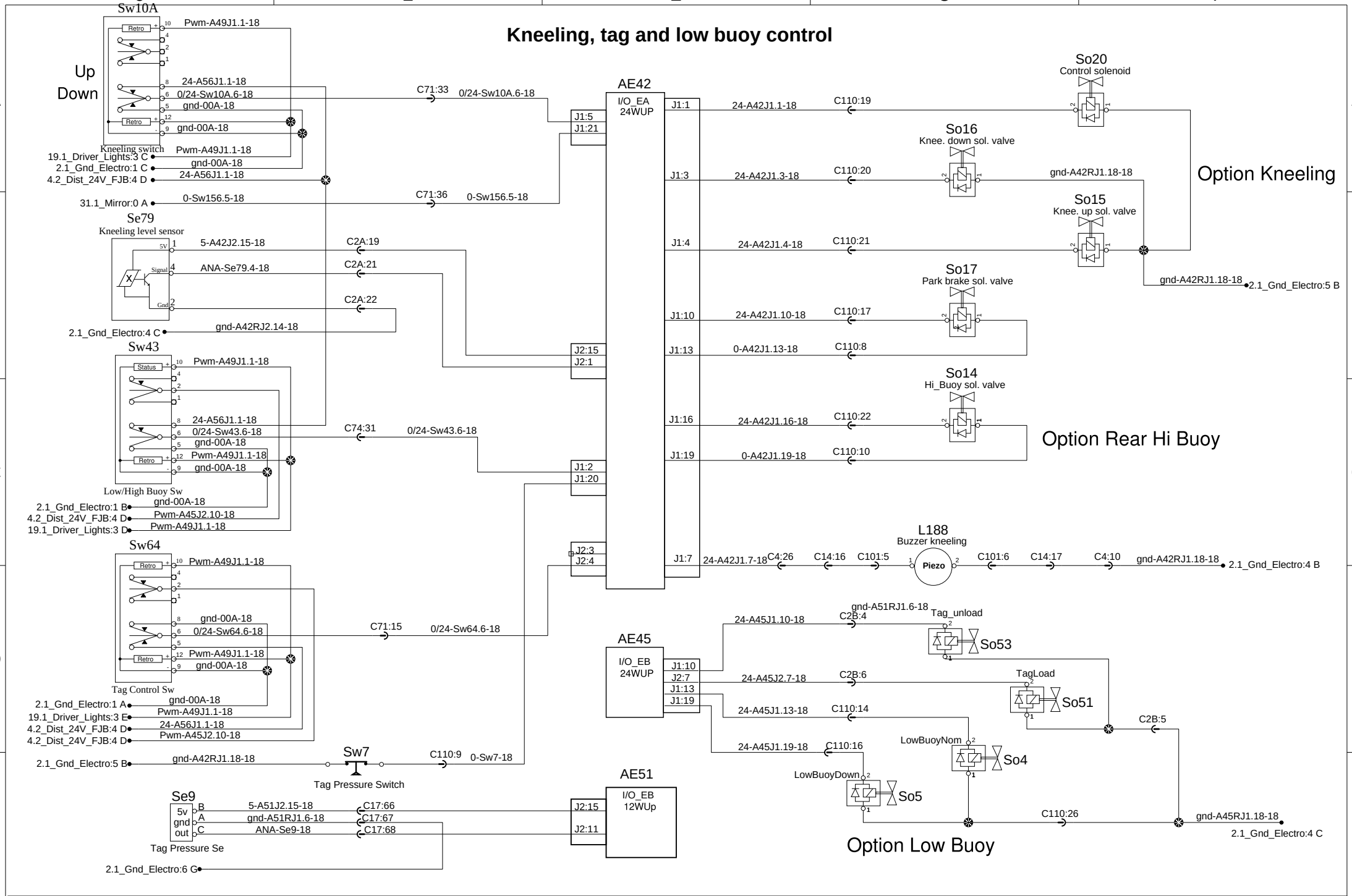

PREVOST®	WIRING DIAGRAM	No:D062140	Page:32.1	Rev:0

Luggage door Lock/Unlock

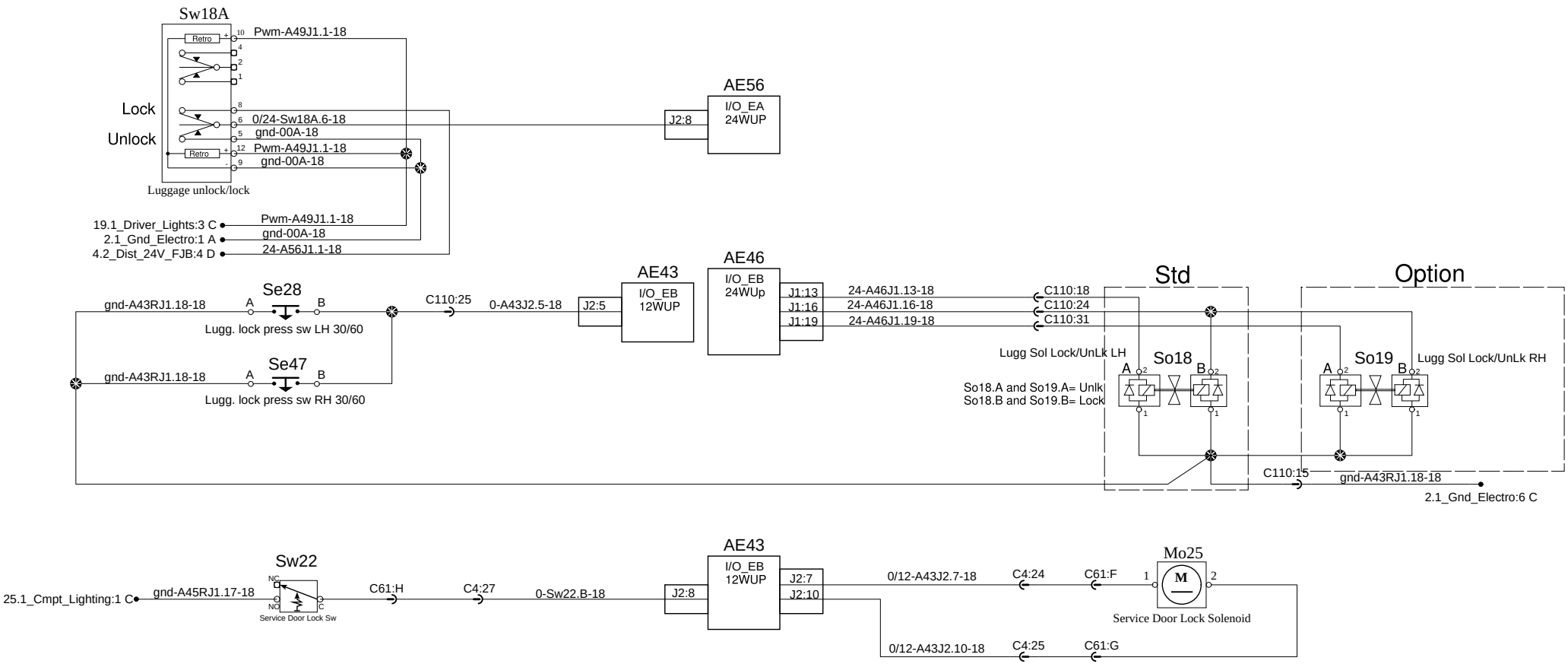

Wipers and washer

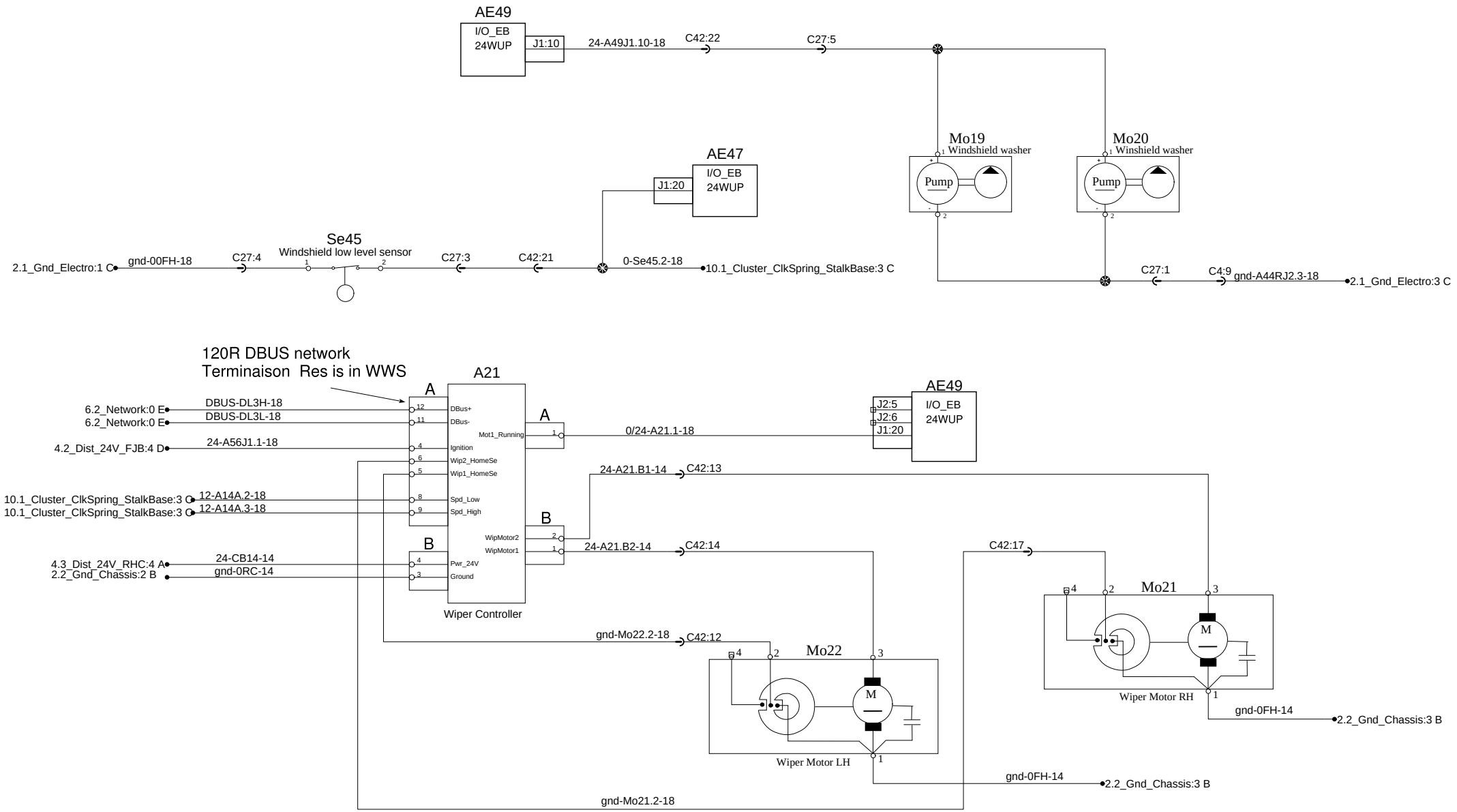

PREVOST®	WIRING DIAGRAM	No:D062140	Page:34.1	Rev:0

Speakers arrangement (Delta configuration)

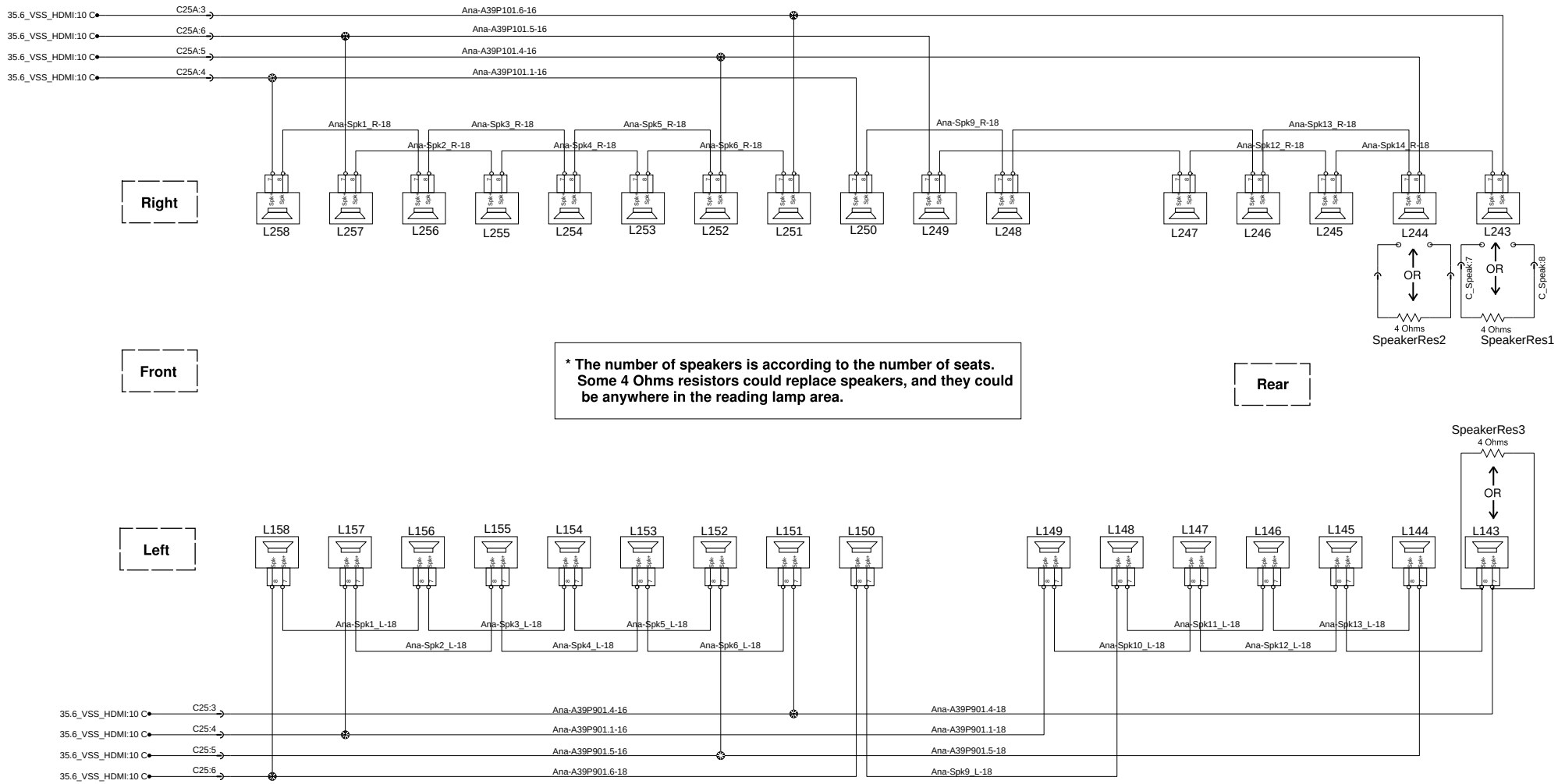

*** The number of speakers is according to the number of seats. Some 4 Ohms resistors could replace speakers, and they could be anywhere in the reading lamp area.**

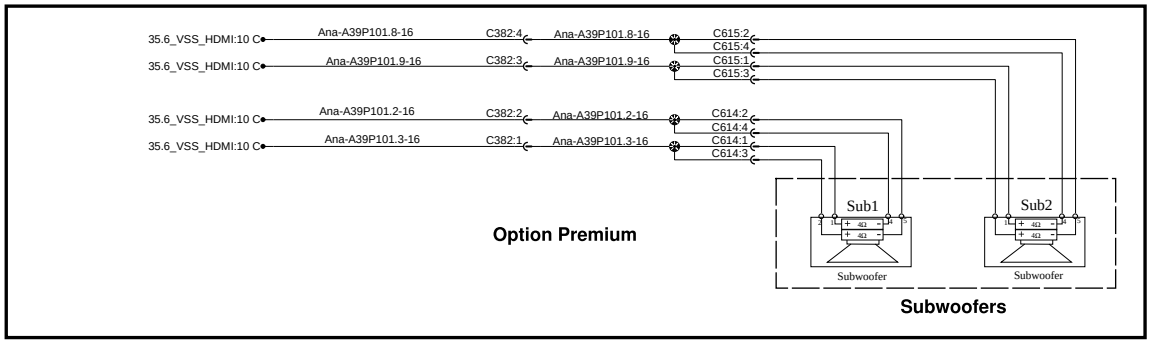

Rev:0

Page:35.2

No:D062140

WIRING DIAGRAM

PREVOST®

Video distribution HDMI

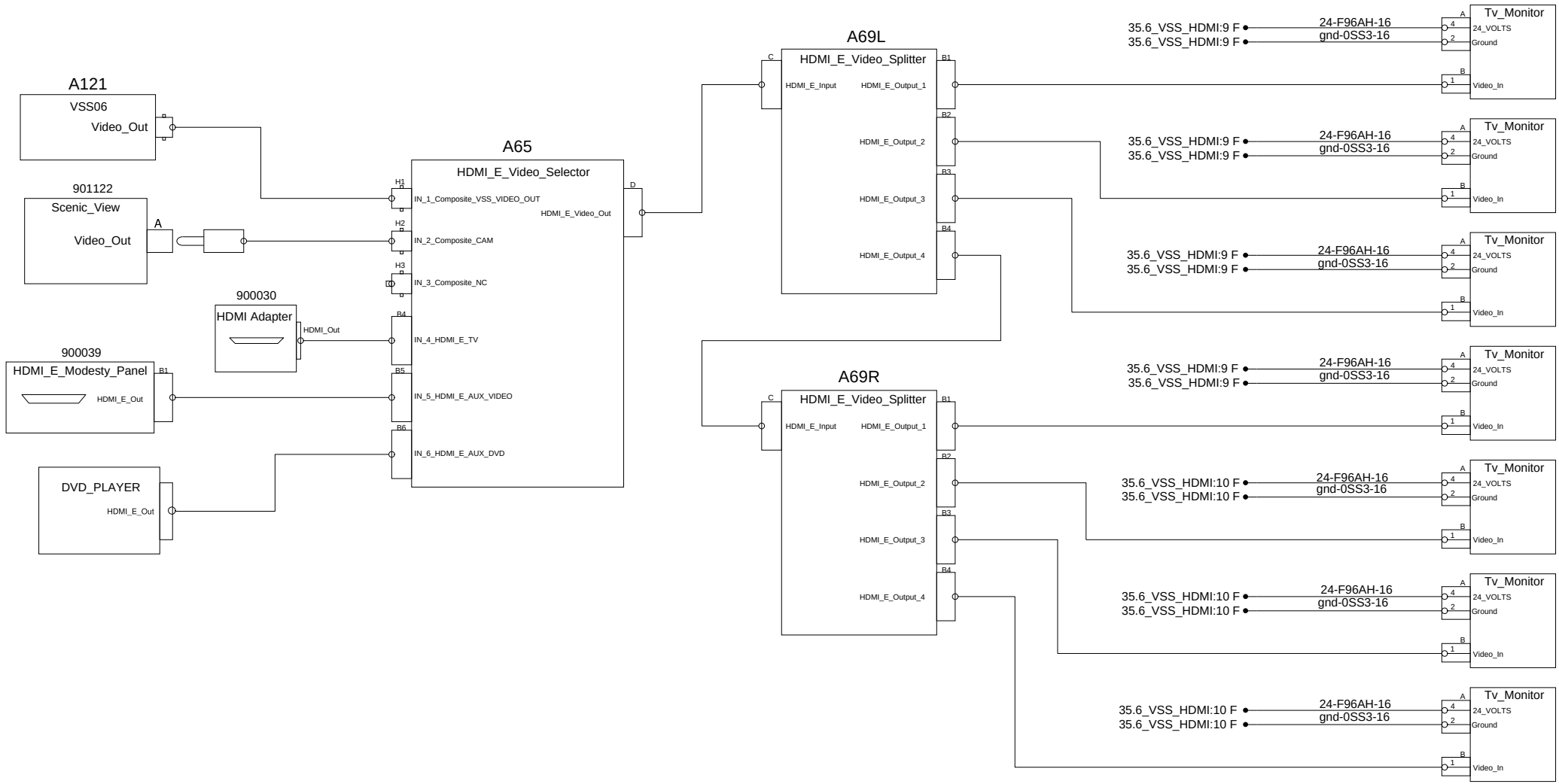

PREVOST®	WIRING DIAGRAM	No:D062140	Page:35.3	Rev:0

AUDIO VIDEO SYSTEM

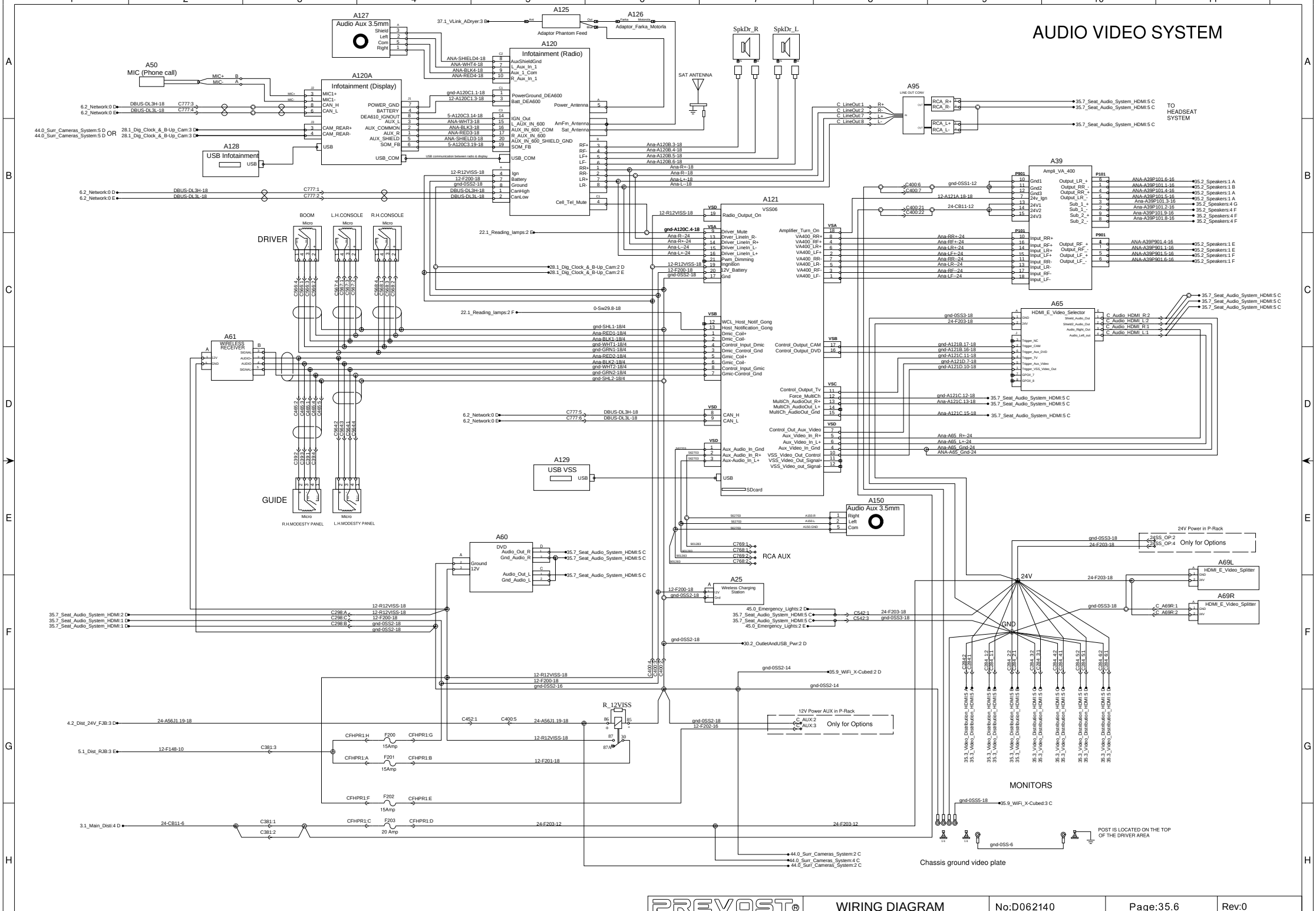

PREVOST®	WIRING DIAGRAM	No:D062140	Page:35.6	Rev:0

AUDIO VIDEO SYSTEM

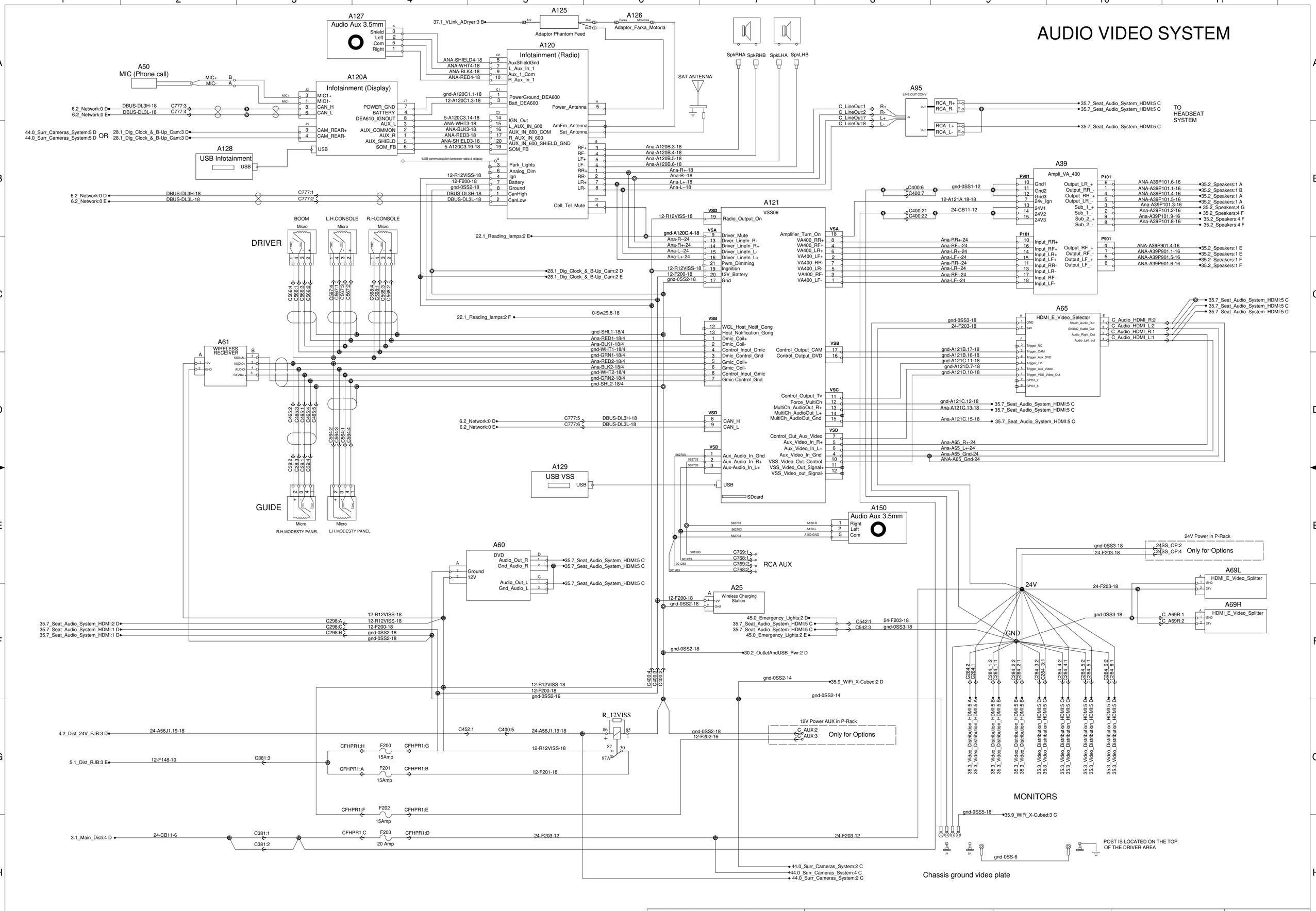

PREVOST®	WIRING DIAGRAM	No:D062140	Page:35.6	Rev:02

8 channels seat audio system HDMI

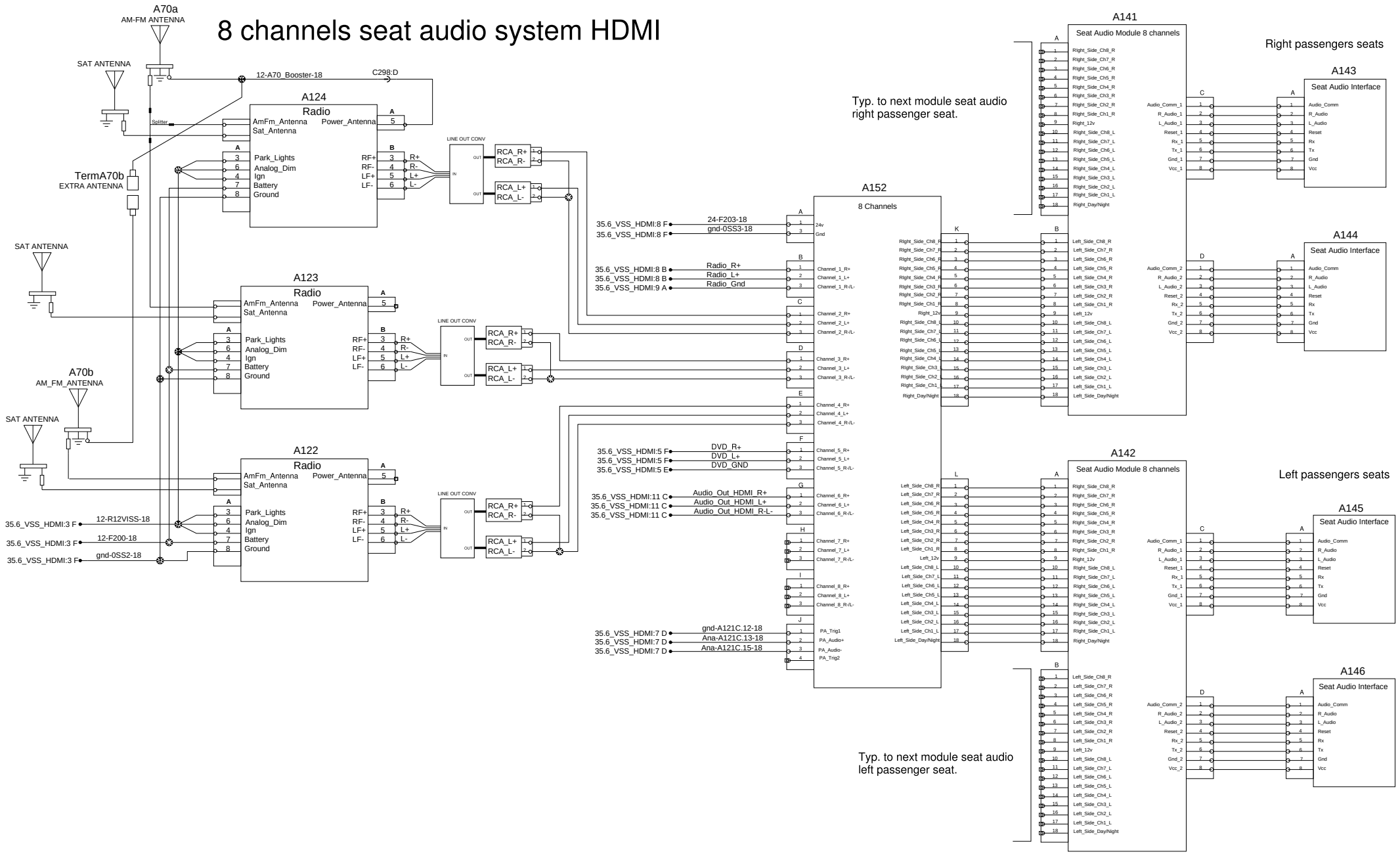

PREVOST®	WIRING DIAGRAM	No:D062140	Page:35.7	Rev:0

WIFI - Wireless System Option

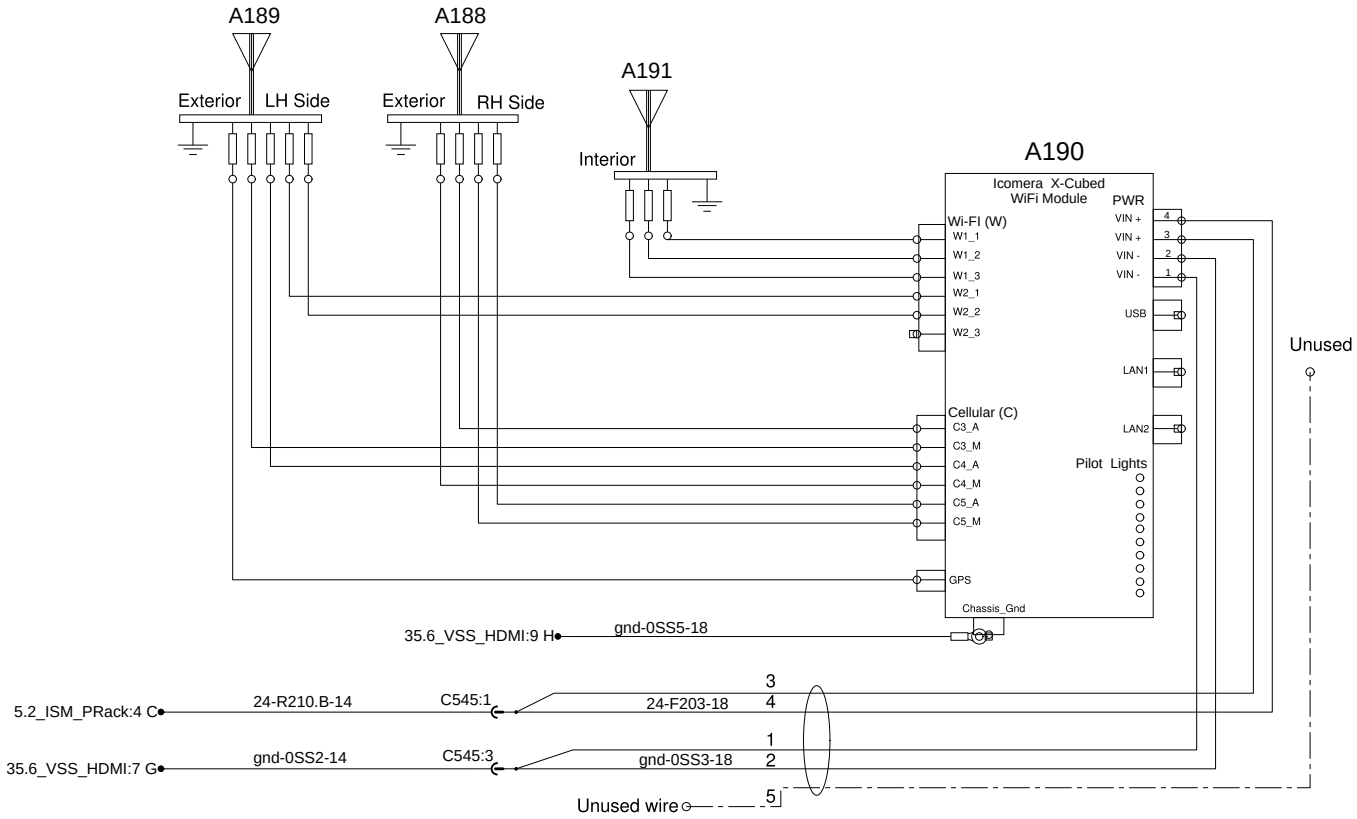

PREVOST®	WIRING DIAGRAM	No:D062140	Page:35.9	Rev:0

Wheel chair lift Ricon 9000

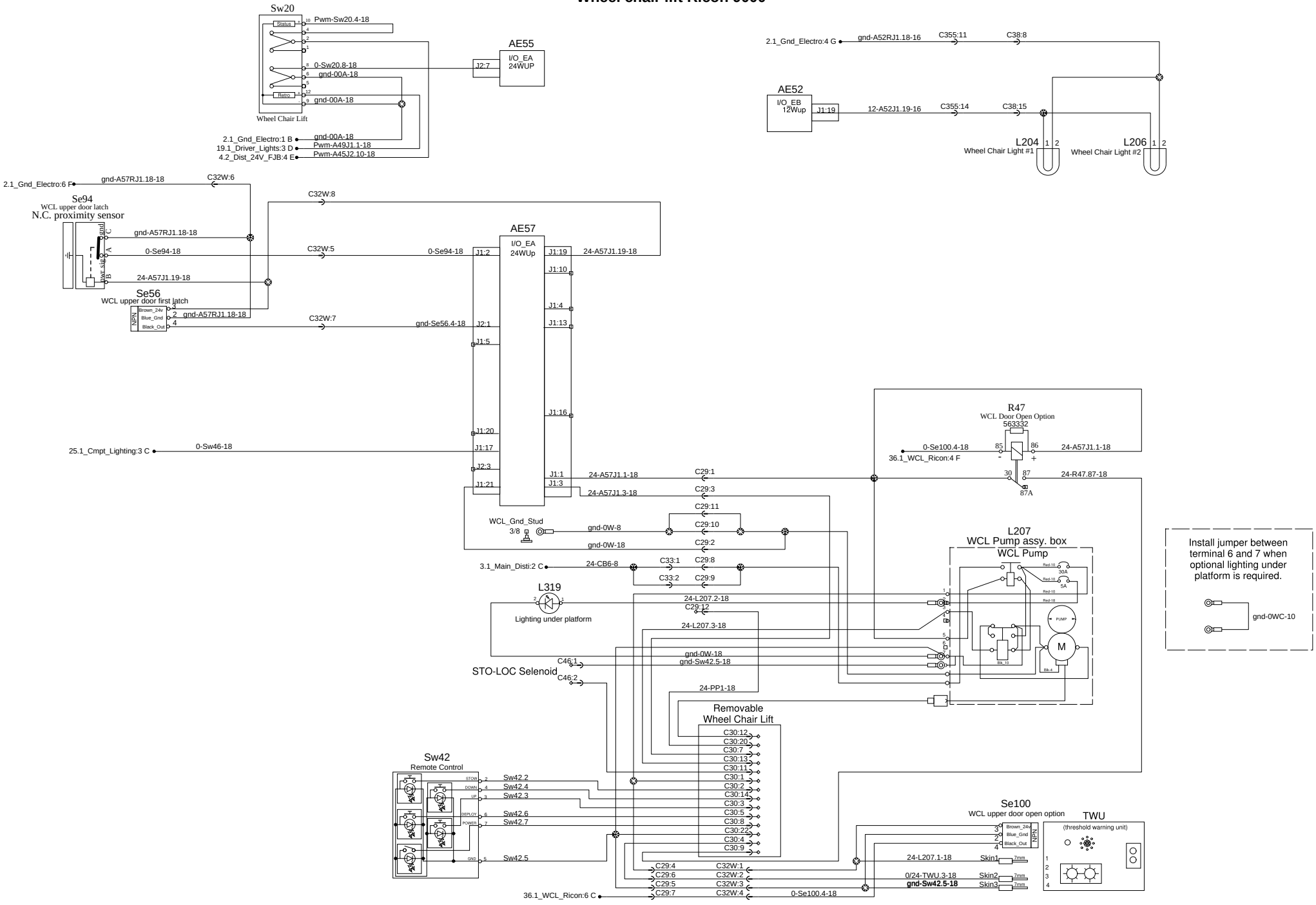

Rev:0

Page:36.1

No:D062140

WIRING DIAGRAM

PREVOST®

Volvo Link TGW

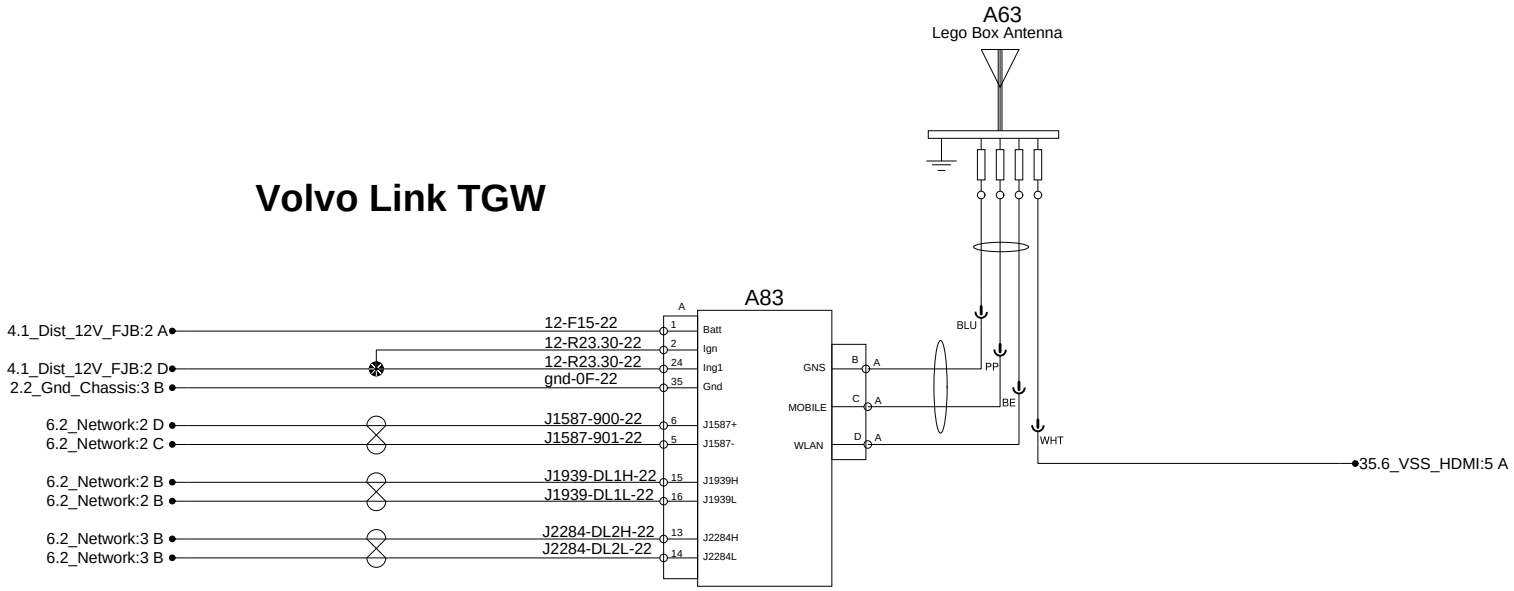

Air Dryer Electric Control and Heater

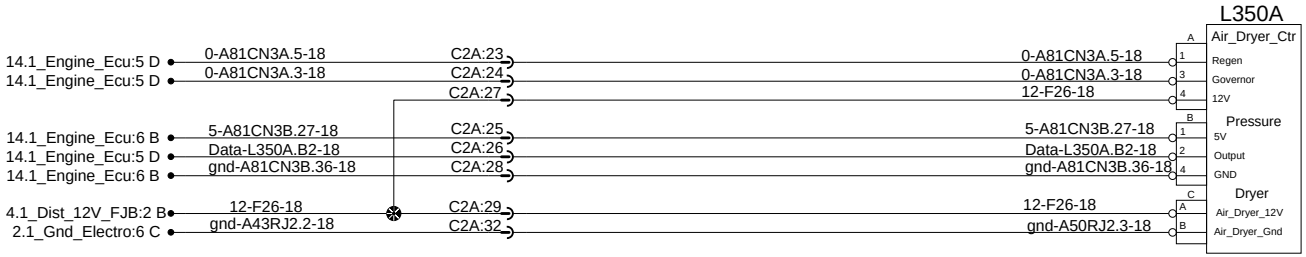

ZF Steering control

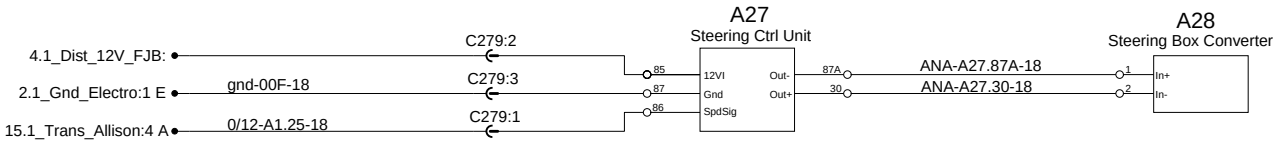

Automatic fire suppression system

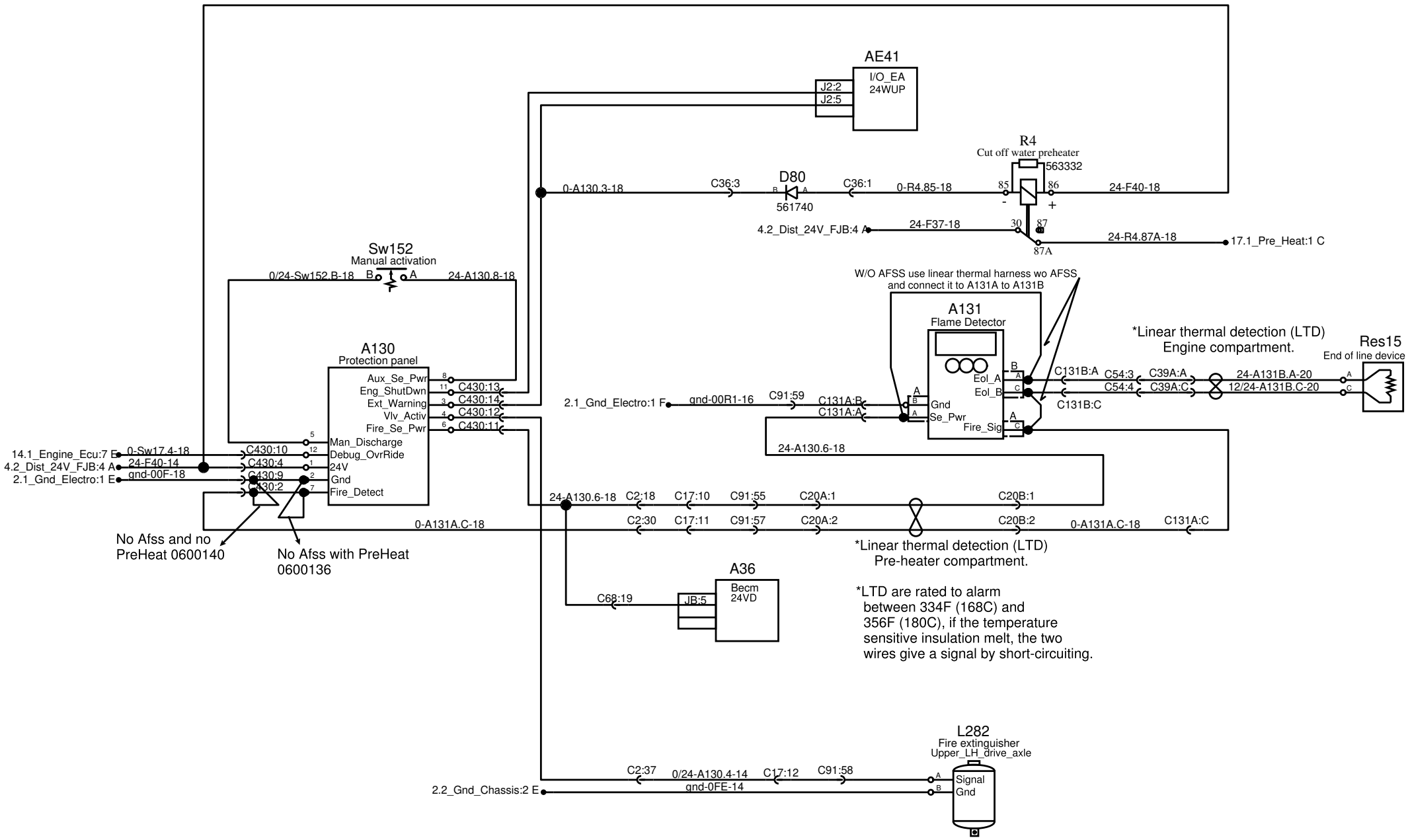

PREVOST®	WIRING DIAGRAM	No:D062140	Page:38.1	Rev:3

Tire pressure monitoring system

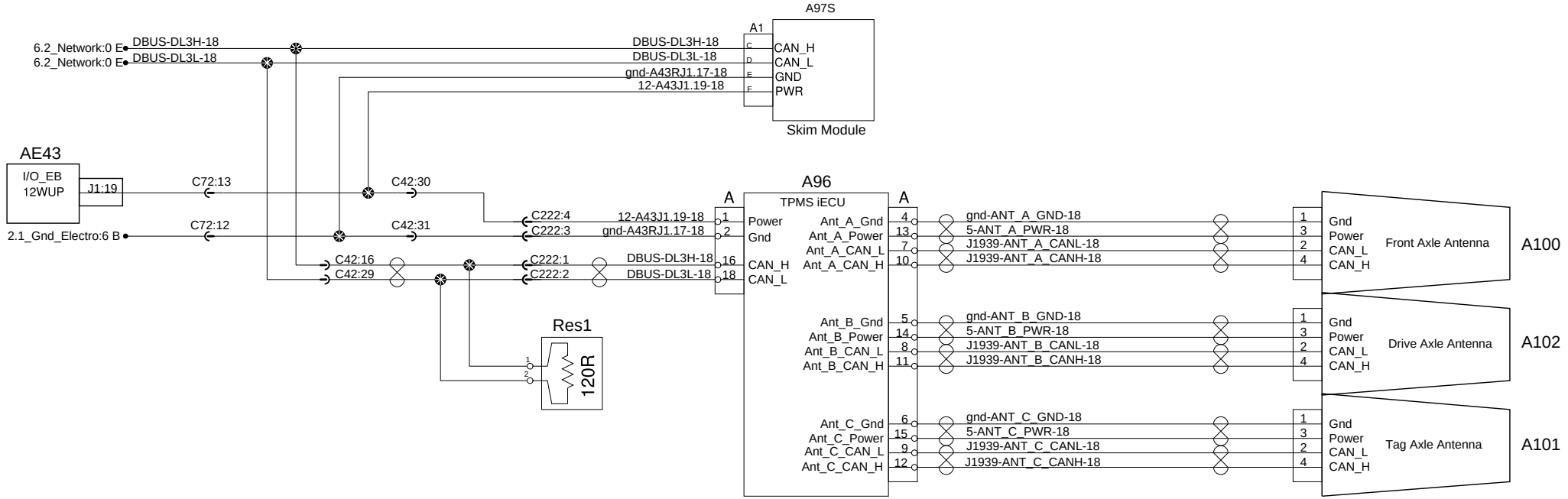

PREVOST®	WIRING DIAGRAM	No:D062140	Page:39.1	Rev:0

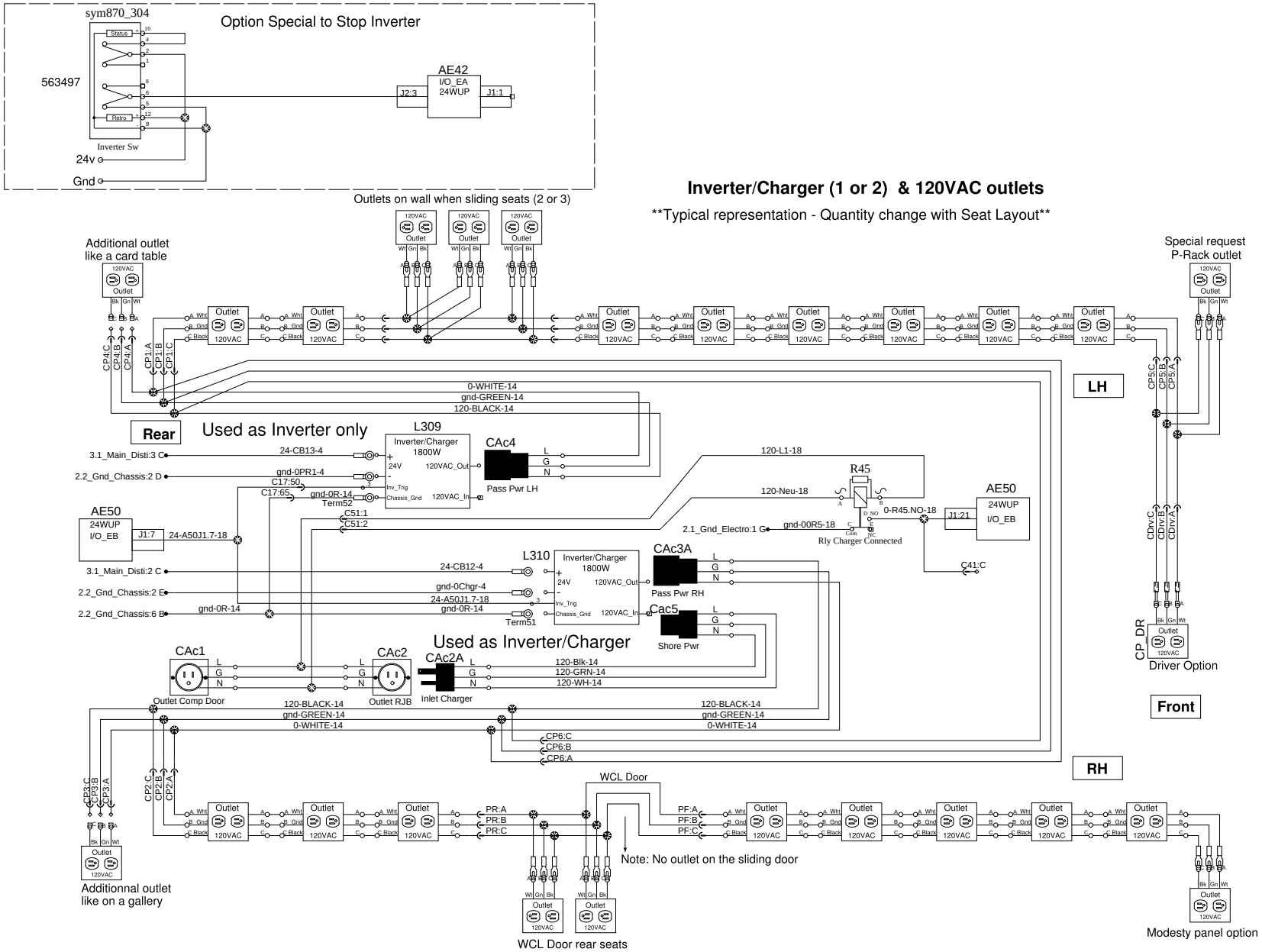

PREVOST®	WIRING DIAGRAM	No:D062140	Page:40.1	Rev:0

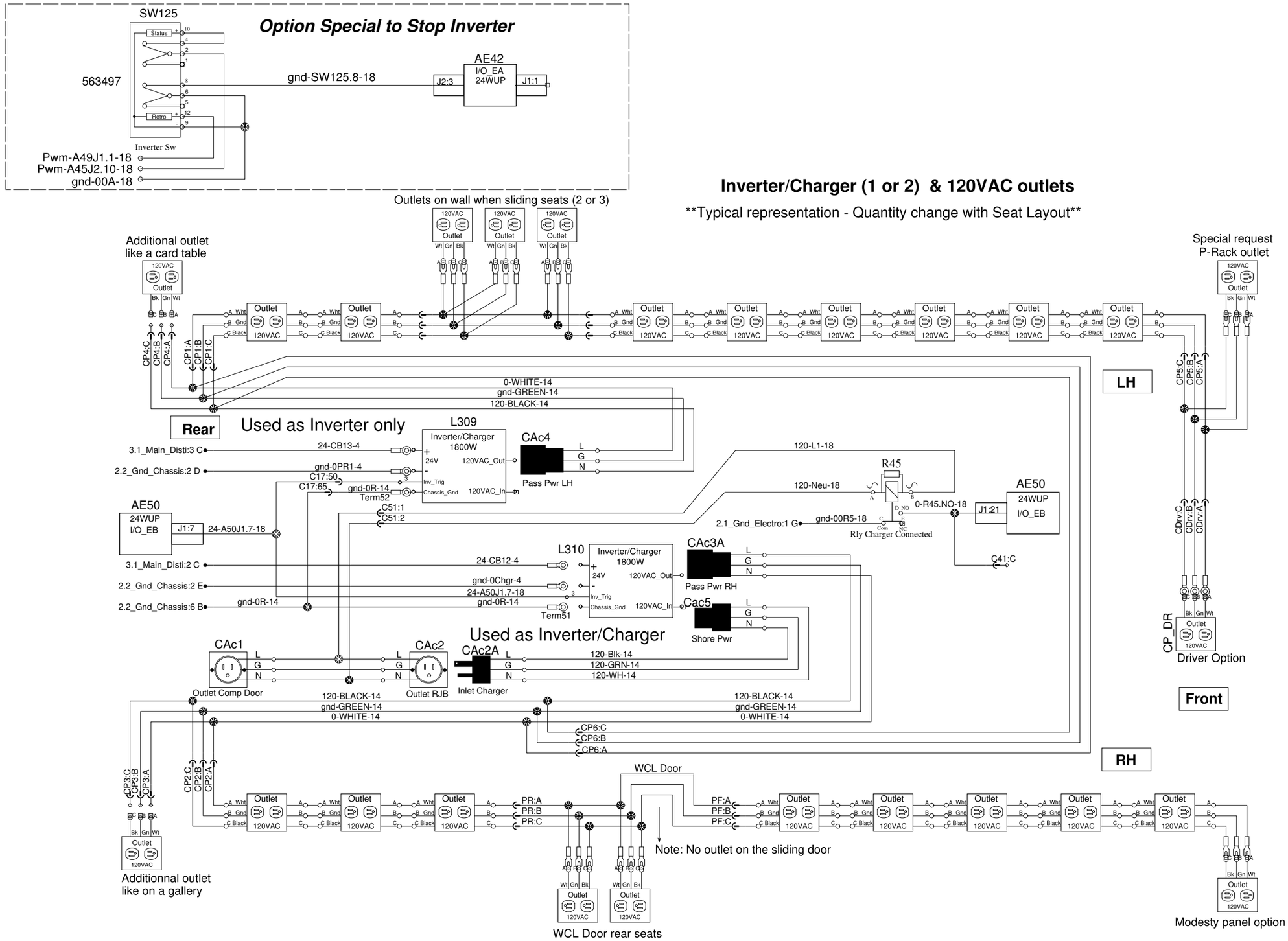

PREVOST®	WIRING DIAGRAM	No:D062140	Page:40.1 SP1	Rev:0

Sun Visors

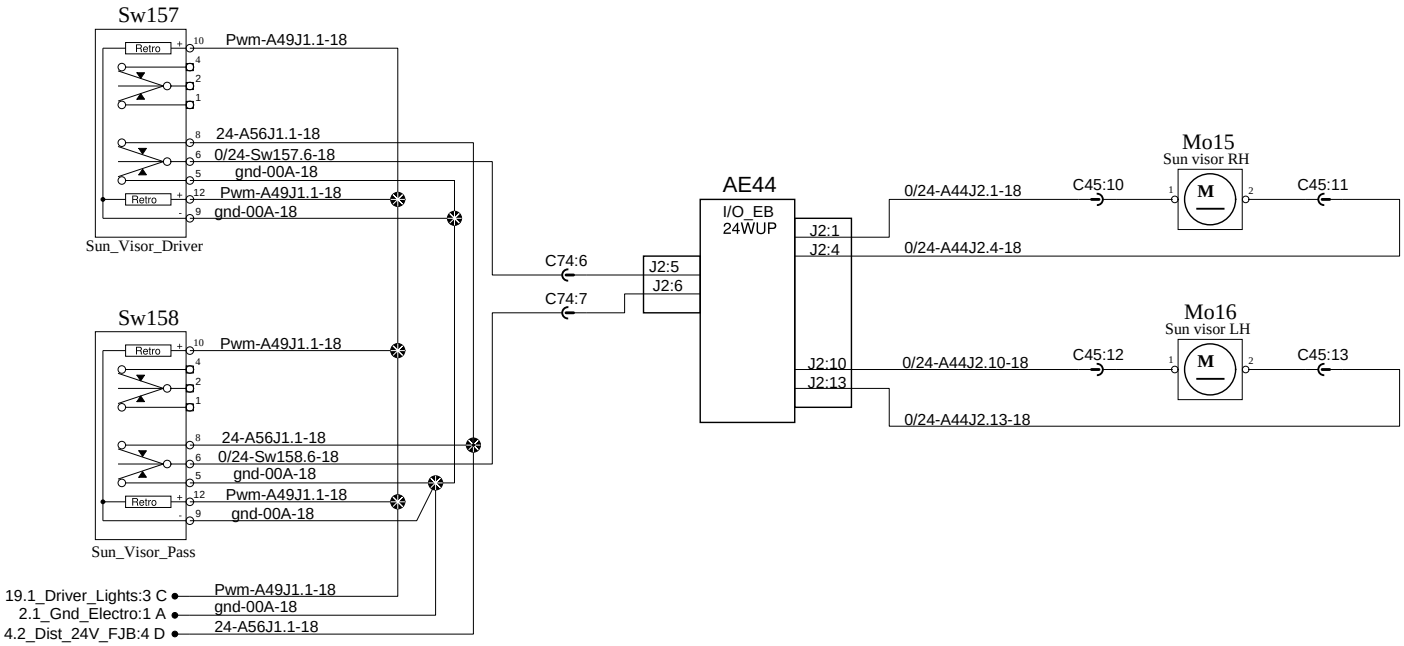

PREVOST®	WIRING DIAGRAM	No:D062140	Page:41.1	Rev:0

ELD / ITS J1939 Gateway

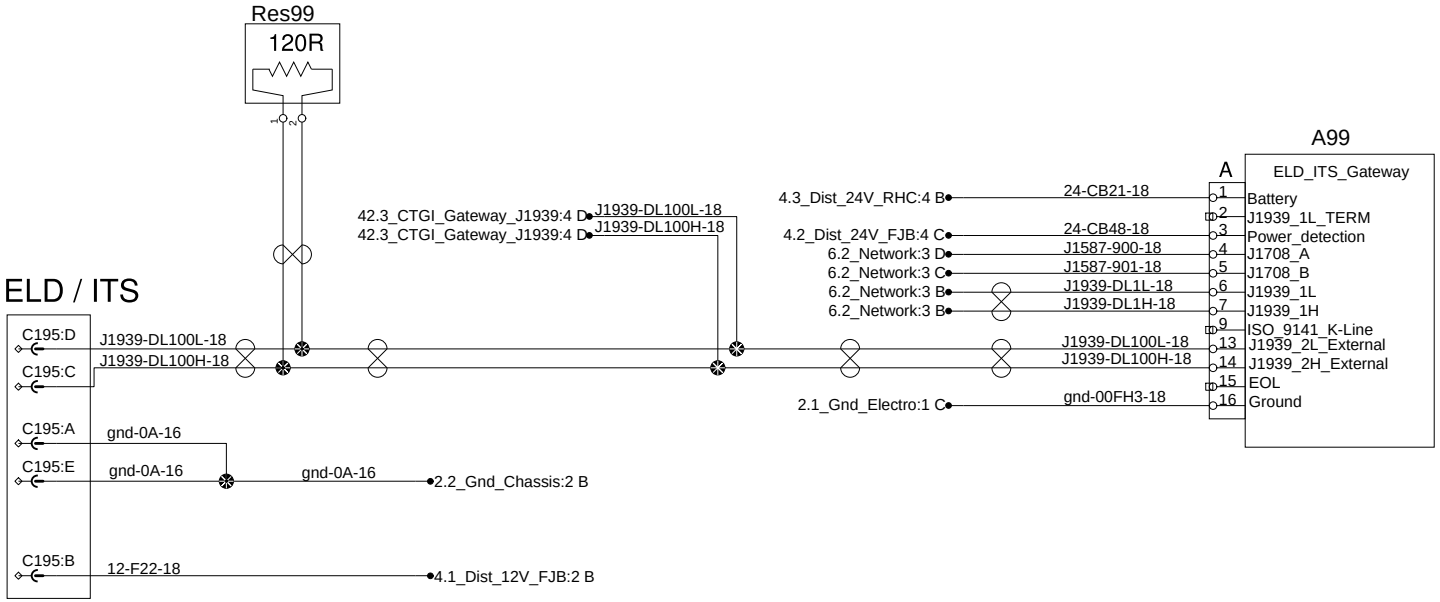

Surrounding Cameras System

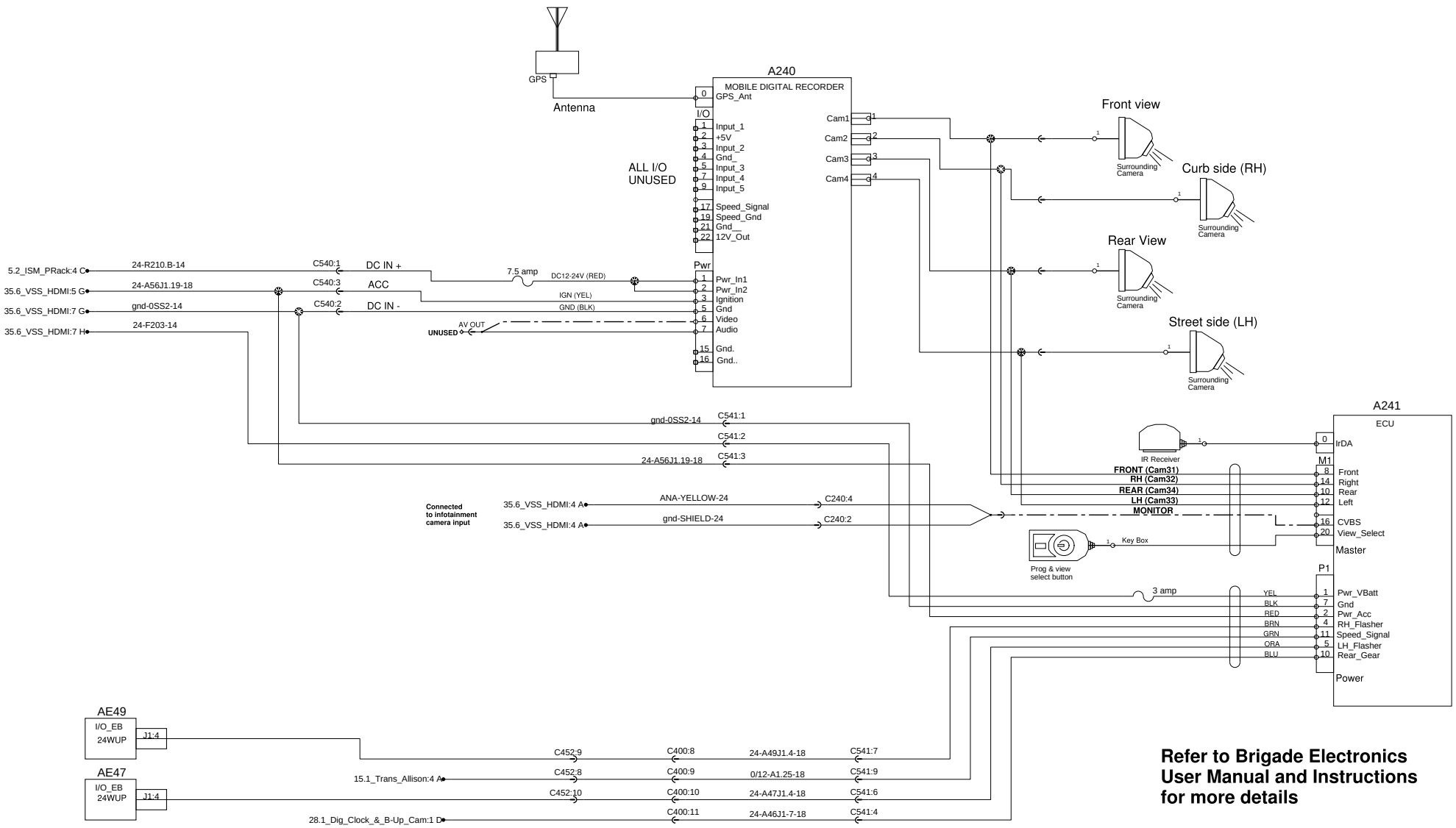

Refer to Brigade Electronics User Manual and Instructions for more details

Emergency Lights

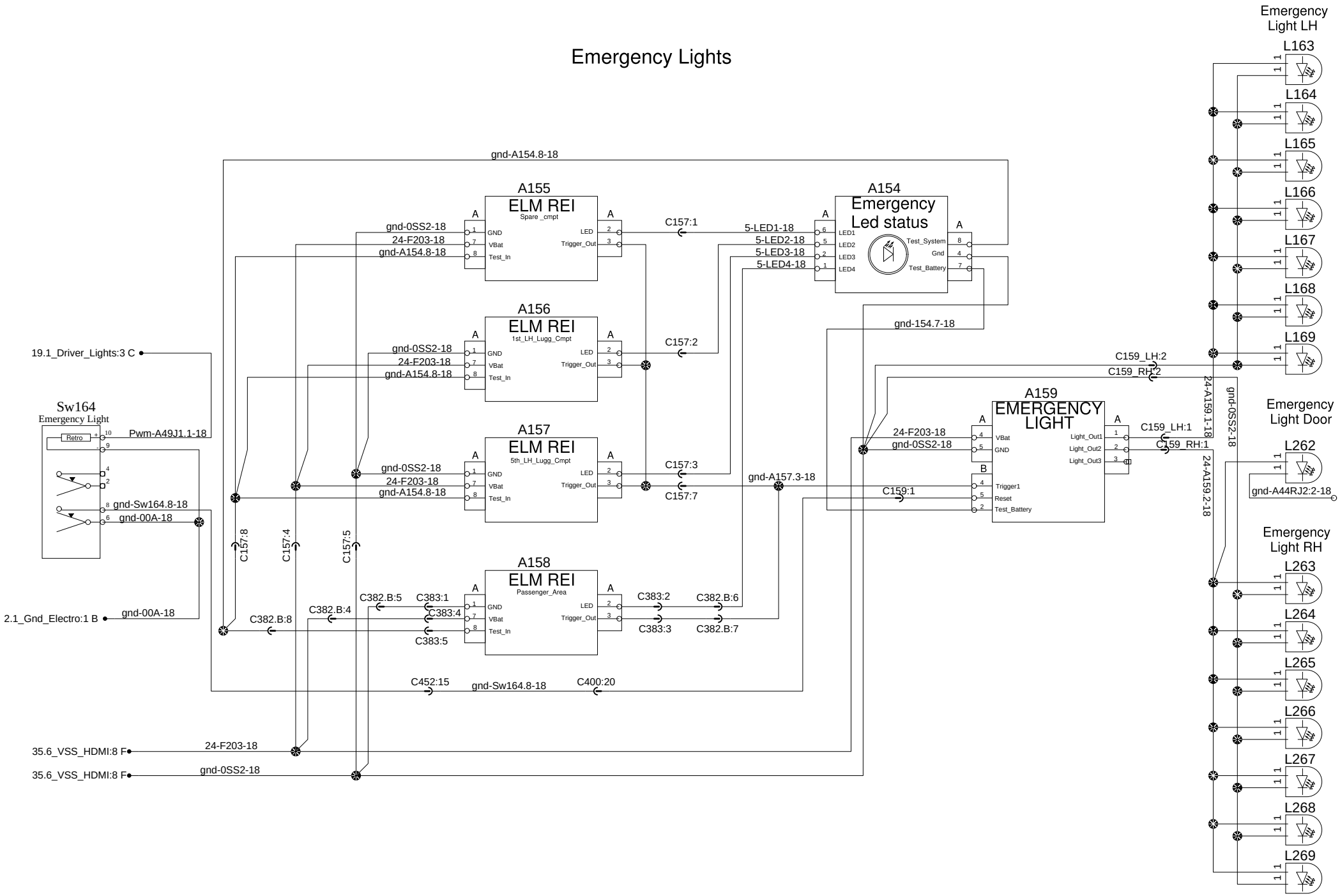

PREVOST®	WIRING DIAGRAM	No:D062140	Page:45.0	Rev:00

Customer Adaptation

ANTI THEFT DRIVER LIGHT

Ref page 3.2 for all details
Ignition start

Ref page 19.1 for all details
Driver Light

Original SW24 Remove Wires Pin 2,4, and 10
and add shrink at the end.
Use these contacts 2 and 4 for Anti Thefh connections

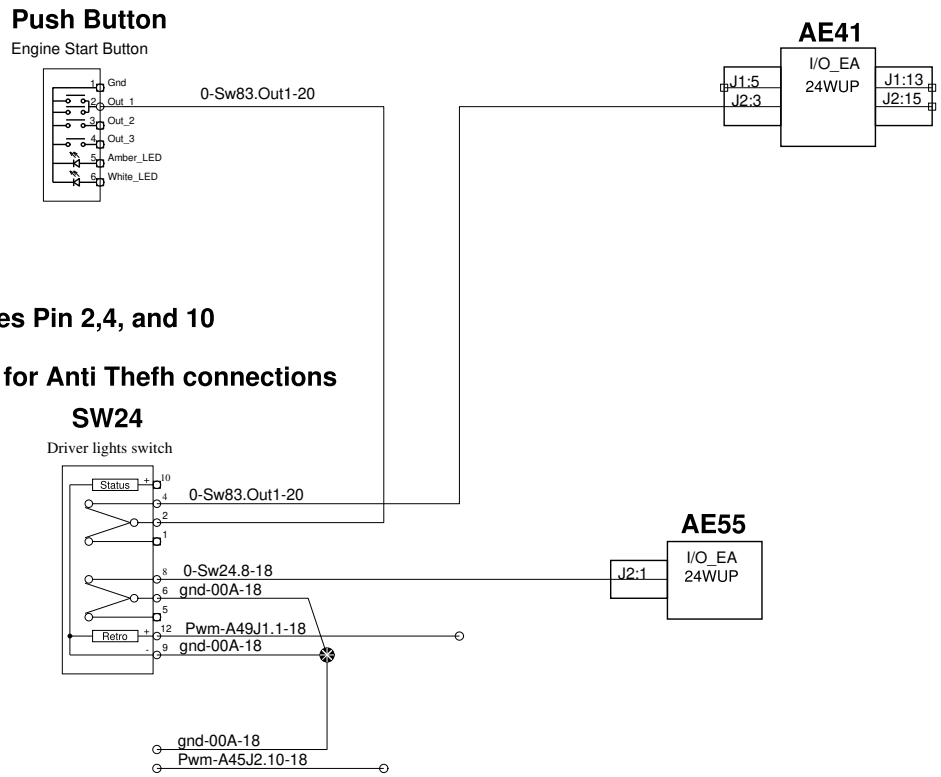

Media Player MP-5000 With GPS

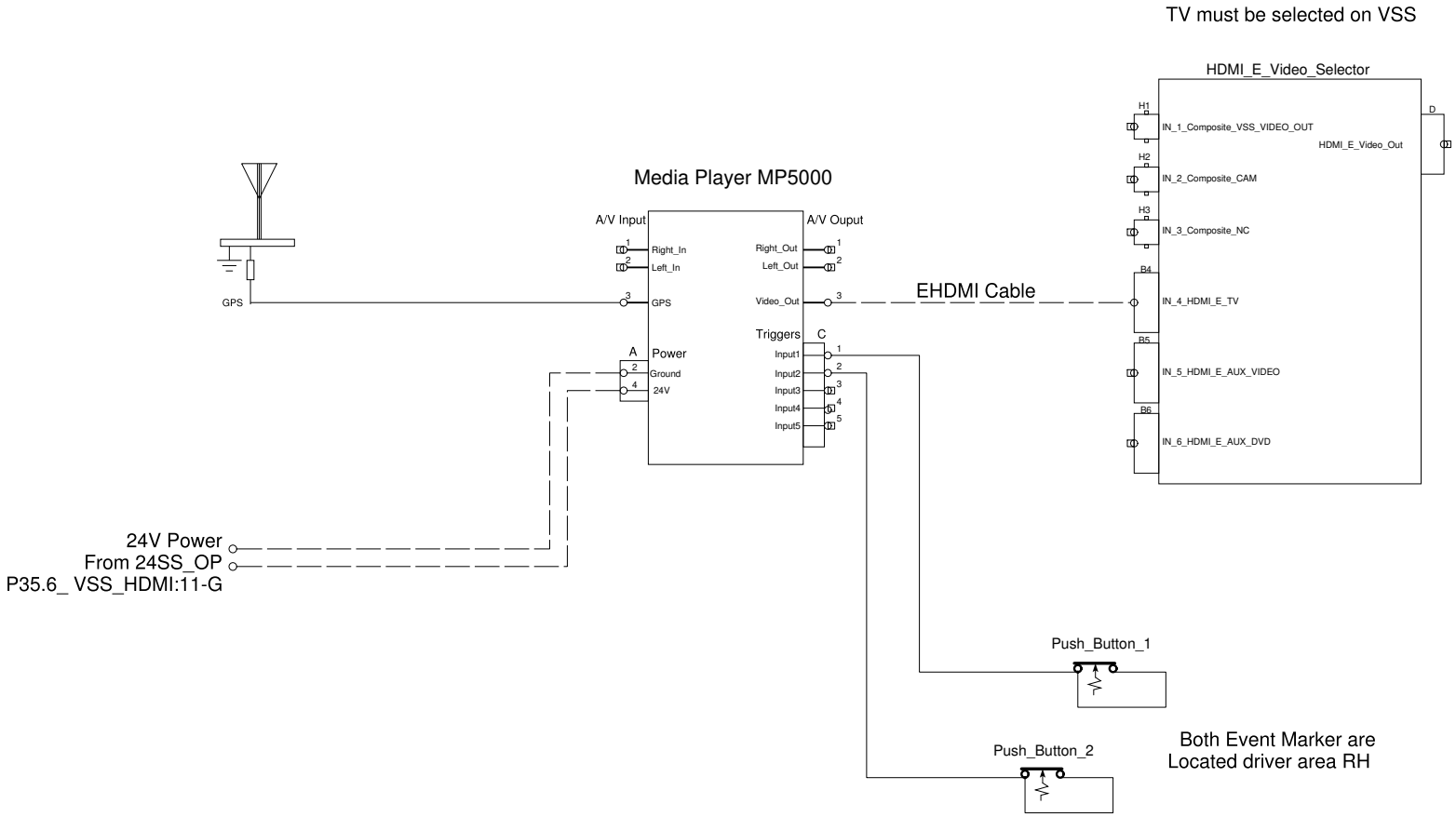

PREVOST®	WIRING DIAGRAM	No: D062140	Page:60.11	Rev:0

Mobile Digital Video Recorders (DVR)

Customer Adaptation

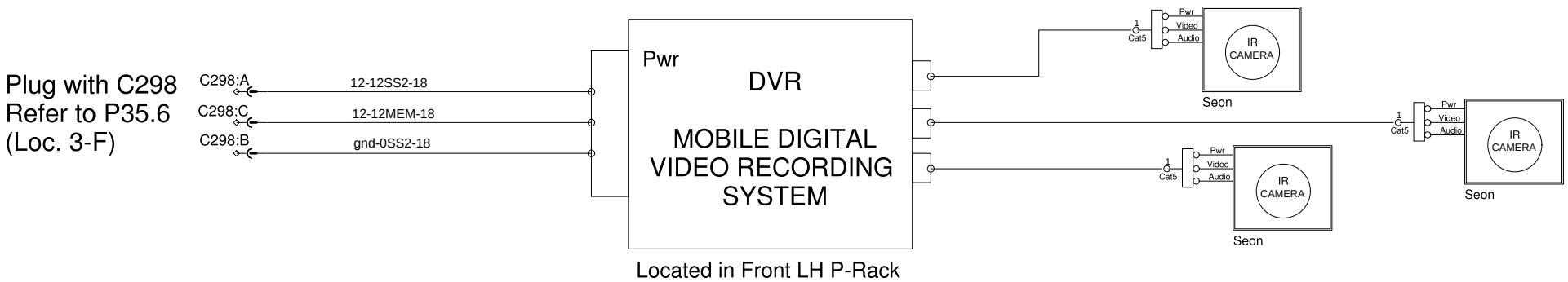

PREVOST®	WIRING DIAGRAM	No:D062140	Page:60.24	Rev:00

Lavatory Smoke Detector
Customer Adaptation

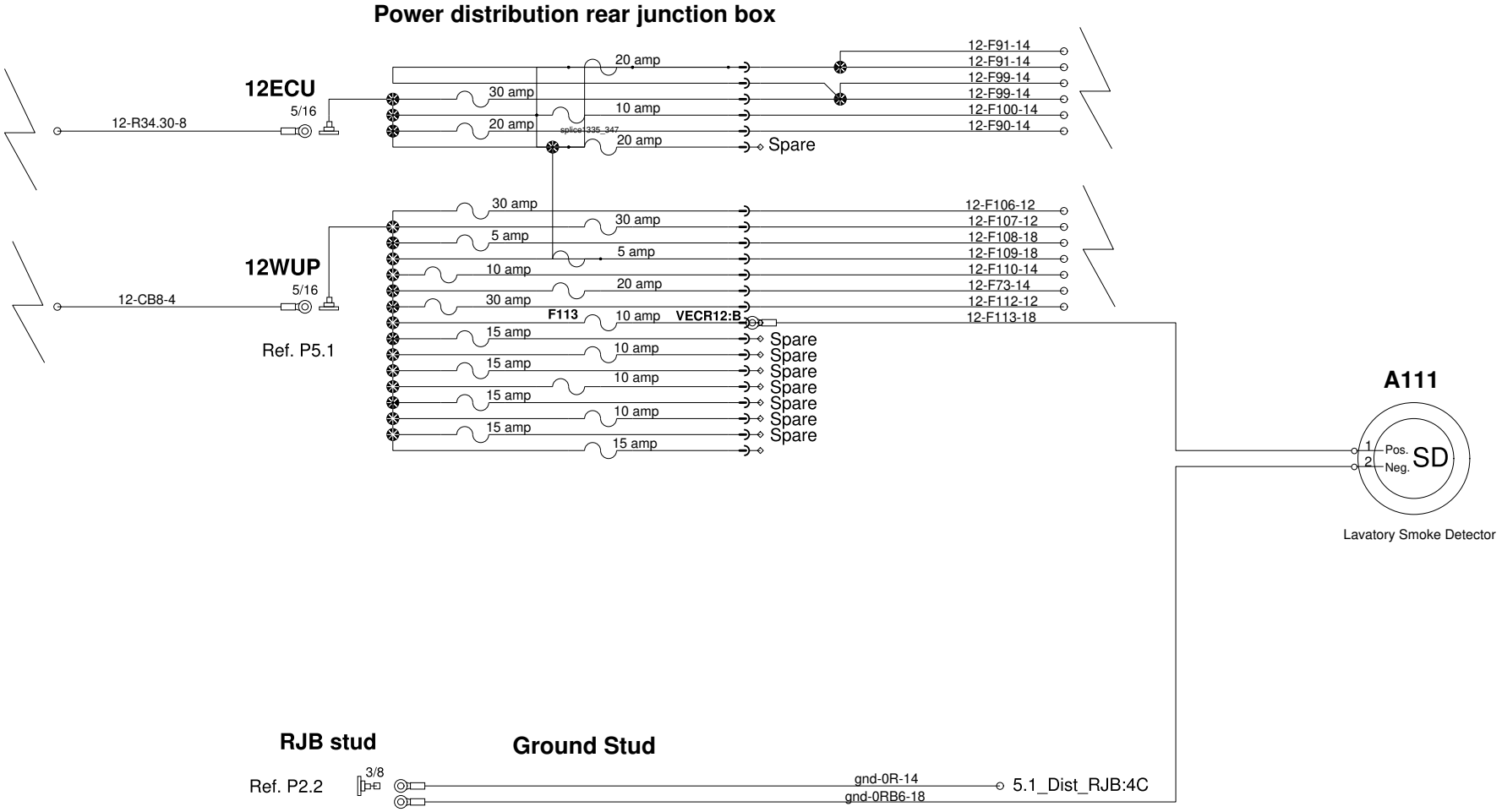

PREVOST®	WIRING DIAGRAM	No:D062140	Page:60.25	Rev:0

Customer adaptation Signals and power for camera system

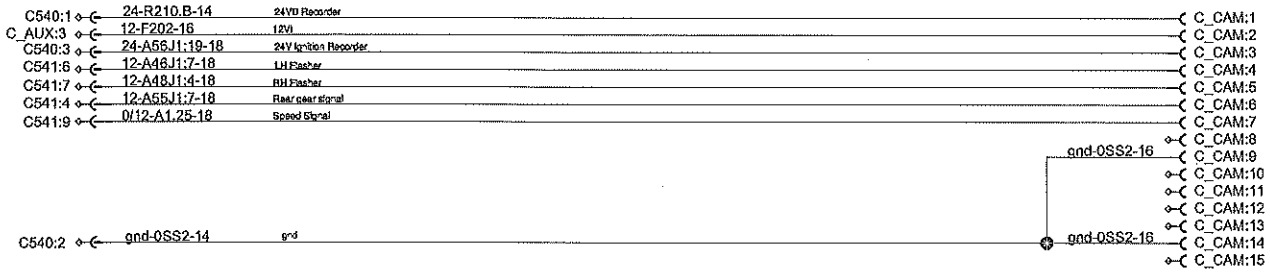

To supplier camera system

To connect the following connector, refer to pages below:
- Connector C540 - page 44.0 2 C
- Connector C541 - page 44.0 5 E
- Connector C_AUX - page 35.6 7 G

MULTIPLEX OUTPUT LIST

O_xx... = Physical Ouput Pin ; I_xx... = Physical Input Pin ; D_xx... = CAN Network Signal from the HVAC control Head ; B_xx.. = Multiplex system global Network Variable

Module.Pin#	Signal name	Description	Page	Connected devices	Input involved		
A36.JA:13	O_EngineRun	Engine Run Signal	3.2	A15:6	B_EngineRun	.	
					D_OnOffDrvSw	.	
					I_AccKeySw	A36.JB:6	3.2
					I_BatMonMod53	A53.J1:24	6.1
					I_BatMonMod54	A54.J1:24	6.1
					I_IgnKeySw	A36.JB:2	3.2
A36.JA:14	O_MasterRlyLatch		3.2		B_EngineRun	.	
					I_IgnKeySw	A36.JB:2	3.2
					I_RrCutOutSw	A36.JB:21	3.2
A36.JA:15	O_WakeUp	WakeUp Relay	3.3		I_AccKeySw	A36.JB:6	3.2
					I_EntDrUnlockSw	A41.J1:8	29.1
					I_HazardSw	A36.JB:4	26.1
					I_IgnKeySw	A36.JB:2	3.2
					I_RrCutOutSw	A36.JB:21	3.2
					I_WakeUp	A36.JB:5	9.1
A36.JA:24	O_CutOutRel	Emergency CutOut Relay	3.2	R21:85	I_FireExt2ndAlm	A44.J1:10	
					I_IgnKeySw	A36.JB:2	3.2
A36.JA:6	O_DrUnlockRly	Luggages doors unlocks relays	33.1		I_KeylessLuggUnl	A41.J1:18	29.1
					I_LugDorULkSw	A41.J1:20	33.1
A36.JA:7	O_DrLockRly	Luggages doors locks relays	33.1		I_AccKeySw	A36.JB:6	3.2
					I_EntDrUnlockSw	A41.J1:8	29.1
					I_HazardSw	A36.JB:4	26.1
					I_IgnKeySw	A36.JB:2	3.2
					I_KeylessLockAll	A41.J1:19	29.1
					I_LugDorLkSw	A41.J1:17	33.1
					I_RrCutOutSw	A36.JB:21	3.2
					I_WakeUp	A36.JB:5	9.1
A41.J1:11	O_ConvWakeUp	Converter wake up signal	36.1	CC2:1, FREE:FREE, CC2:1	I_AccKeySw	A36.JB:6	3.2
					I_EntDrUnlockSw	A41.J1:8	29.1
					I_HazardSw	A36.JB:4	26.1
					I_IgnKeySw	A36.JB:2	3.2
					I_RrCutOutSw	A36.JB:21	3.2
					I_WakeUp	A36.JB:5	9.1
A41.J1:15	O_ConvParkBrk	Converter park brake signal	36.1	CC2:4, FREE:FREE, CC2:4	I_ParkBrSe	A36.JB:9	12.1
A41.J1:16	O_WakeUpA41		9.1	A36.JB:5	I_AccKeySw	A36.JB:6	3.2
					I_DrvLtSw	A41.J1:2	19.1
					I_EntDorLockSw	A41.J1:9	29.1
					I_EntDorOpSe	A41.J1:5	29.1
					I_EntDrUnlockSw	A41.J1:8	29.1
					I_FireSensorA36	A41.J1:10	9.1
					I_HazardSw	A36.JB:4	26.1
					I_HornSw	A41.J1:3	9.1
					I_IgnKeySw	A36.JB:2	3.2

MULTIPLEX OUTPUT LIST

O_xx... = Physical Ouput Pin ; I_xx... = Physical Input Pin ; D_xx... = CAN Network Signal from the HVAC control Head ; B_xx.. = Multiplex system global Network Variable

Module.Pin#	Signal name	Description	Page	Connected devices	Input involved		
A41.J1:16	O_WakeUpA41		9.1	A36.JB:5	I_KeylessDrUnl	A41.J1:4	29.1
					I_KeylessEntReq	A41.J1:21	29.1
					I_KeylessIntru	A41.J1:7	29.1
					I_KeylessLockAll	A41.J1:19	29.1
					I_KeylessLuggUnl	A41.J1:18	29.1
					I_LugDorLkSw	A41.J1:17	33.1
					I_LugDorULkSw	A41.J1:20	33.1
					I_RrCutOutSw	A36.JB:21	3.2
					I_WakeUp	A36.JB:5	9.1
A42.J1:11	O_ConvIgnition	Converter ignition signal	36.1	CC2:5, FREE:FREE, CC2:5	I_IgnKeySw	A36.JB:2	3.2
A42.J1:12	O_ConvEngRun	Converter engine run signal	36.1	CC2:6, FREE:FREE, CC2:6	B_EngineRun	.	
A42.J1:13	O_SldO2MotIn	Rear Slide Out retracting	36.1	CC2:9, CC2:9, FREE:FREE	I_BatMonMod57	A57.J1:24	6.1
					I_SldO1VacPrSe	A56.J1:13	20.1
					I_SldO2CloseSw	A57.J1:10	20.1
					I_SldO2LimiOutSw	A57.J1:14	20.1
					I_SldO2LimitInSe	A57.J1:11	20.1
					I_SldO2OpenSw	A57.J1:9	20.1
					I_SldO2PBrakeSw	A57.J1:12	20.1
A42.J1:14	O_SldO1MotIn	Front Slide Out retracting	36.1	CC2:7, CC2:7, FREE:FREE	I_BatMonMod56	A56.J1:24	6.1
					I_SldO1CloseSw	A56.J1:10	20.1
					I_SldO1LimiOutSw	A56.J1:14	20.1
					I_SldO1LimitInSe	A56.J1:11	20.1
					I_SldO1OpenSw	A56.J1:9	20.1
					I_SldO1PBrakeSw	A56.J1:12	20.1
					I_SldO1VacPrSe	A56.J1:13	20.1
A42.J1:15	O_TransShftDown	Transmission Shift Down	38.1	CC1:6	I_VIPSteerWh1	A55.J1:3	38.1
					I_VIPSteerWh2	A55.J1:4	38.1
					I_VIPSteerWh5V	A55.J1:2	38.1
A42.J1:16	O_SldO1MotOut	Front Slide Out extending	36.1	CC2:8, CC2:8, FREE:FREE	I_BatMonMod56	A56.J1:24	6.1
					I_SldO1CloseSw	A56.J1:10	20.1
					I_SldO1LimiOutSw	A56.J1:14	20.1
					I_SldO1LimitInSe	A56.J1:11	20.1
					I_SldO1OpenSw	A56.J1:9	20.1
					I_SldO1PBrakeSw	A56.J1:12	20.1
					I_SldO1VacPrSe	A56.J1:13	20.1
A42.J1:30	O_TransShftUp	Transmission Shift Up	38.1	CC1:7	I_VIPSteerWh1	A55.J1:3	38.1
					I_VIPSteerWh2	A55.J1:4	38.1
					I_VIPSteerWh5V	A55.J1:2	38.1
A43.J1:11	O_SldO2MotOut	Rear Slide Out extending	36.1	CC2:10, CC2:10, FREE:FREE	I_BatMonMod57	A57.J1:24	6.1
					I_SldO1VacPrSe	A56.J1:13	20.1
					I_SldO2CloseSw	A57.J1:10	20.1
					I_SldO2LimiOutSw	A57.J1:14	20.1
					I_SldO2LimitInSe	A57.J1:11	20.1

MULTIPLEX OUTPUT LIST

O_xx... = Physical Ouput Pin ; I_xx... = Physical Input Pin ; D_xx... = CAN Network Signal from the HVAC control Head ; B_xx.. = Multiplex system global Network Variable

Module.Pin#	Signal name	Description	Page	Connected devices	Input involved		
A43.J1:11	O_SldO2MotOut	Rear Slide Out extending	36.1	CC2:10, CC2:10, FREE:FREE	I_SldO2OpenSw	A57.J1:9	20.1
					I_SldO2PBrakeSw	A57.J1:12	20.1
A43.J1:16	O_BrkRedCompat	Brake Redundant Compatible	38.1	A72.J2:7	I_BrkLtSeFrSig	A36.JB:13	12.1
					I_BrkLtSeRrSig	A51.J1:10	12.1
					I_IgnKeySw	A36.JB:2	3.2
					I_VIPSteerWh1	A55.J1:3	38.1
					I_VIPSteerWh2	A55.J1:4	38.1
					I_VIPSteerWh5V	A55.J1:2	38.1
A44.J1:1	O_DashTrapPMo	Dash Trap Motor	18.1	Mo3:1	D_AirFlapBit0	.	
					D_AirFlapBit1	.	
					D_AirFlapBit2	.	
					I_IgnKeySw	A36.JB:2	3.2
A44.J1:2	O_DashTrapNMo	Dash Trap Motor Return	18.1	Mo3:3	D_AirFlapBit0	.	
					D_AirFlapBit1	.	
					D_AirFlapBit2	.	
					I_IgnKeySw	A36.JB:2	3.2
A44.J1:20	O_DashBackLit	Dash BackLighting	19.1		I_HdLtPos1Sw	A43.J1:4	26.1
A44.J1:7	O_BackUpMon	Backup Monitor Signal	28.1	MONITOR:1	I_BackUpCamSw	A55.J1:17	28.1
A44.J1:8	O_FrClearLb	Front Clearance Lights Bulb	26.1		B_BatterySaver	.	
					B_TstModExtLight	.	
					I_BlinkSw	A43.J1:20	26.1
					I_HdLtPos1Sw	A43.J1:4	26.1
					I_HdLtPos2SwLH	A45.J1:12	26.1
A45.J1:1	O_FootTrpPSol	Foot Trap Solenoid	18.1	Mo4:A	D_AirFlapBit0	.	
					D_AirFlapBit1	.	
					D_AirFlapBit2	.	
					I_IgnKeySw	A36.JB:2	3.2
A45.J1:2	O_FootTrpNSol	Foot Trap Solenoid	18.1	Mo4:B	D_AirFlapBit0	.	
					D_AirFlapBit1	.	
					D_AirFlapBit2	.	
					I_IgnKeySw	A36.JB:2	3.2
A45.J1:20	O_HornElectric	Horn Electric	9.1		I_AccKeySw	A36.JB:6	3.2
					I_EntDrUnlockSw	A41.J1:8	29.1
					I_FireExt1stAl	A36.JB:23	
					I_FireExt2ndAlm	A44.J1:10	
					I_FireSensorA36	A41.J1:10	9.1
					I_HazardSw	A36.JB:4	26.1
					I_HornSelectSw	A43.J1:7	9.1
					I_HornSw	A41.J1:3	9.1
					I_IgnKeySw	A36.JB:2	3.2
					I_KeylessDrUnl	A41.J1:4	29.1
					I_KeylessIntru	A41.J1:7	29.1
					I_KeylessLockAll	A41.J1:19	29.1

MULTIPLEX OUTPUT LIST

O_xx... = Physical Ouput Pin ; I_xx... = Physical Input Pin ; D_xx... = CAN Network Signal from the HVAC control Head ; B_xx.. = Multiplex system global Network Variable

Module.Pin#	Signal name	Description	Page	Connected devices	Input involved		
A45.J1:20	O_HornElectric	Horn Electric	9.1		I_KeylessLuggUnl	A41.J1:18	29.1
					I_KeylessPanic	A41.J1:6	29.1
					I_LugDorLkSw	A41.J1:17	33.1
					I_RrCutOutSw	A36.JB:21	3.2
					I_WakeUp	A36.JB:5	9.1
A45.J1:21	O_LHFrMkrLb	Left Hand Front Markers Light Bulb	26.1		B_BatterySaver	.	
					B_TstModExtLight	.	
					I_BlinkSw	A43.J1:20	26.1
					I_HdLtPos1Sw	A43.J1:4	26.1
					I_HdLtPos2SwLH	A45.J1:12	26.1
					I_IgnKeySw	A36.JB:2	3.2
					I_KeylessIntru	A41.J1:7	29.1
					I_KeylessPanic	A41.J1:6	29.1
A45.J1:3	O_LHFrFlshLb	Left Hand Front Flasher Light Bulb	26.1		B_BatterySaver	.	
					B_TstModExtLight	.	
					I_LHFlshSw	A45.J1:9	26.1
					I_LHFlshSwRrSig	A51.J1:9	26.2
					I_RHFlshSwRrSig	A51.J1:12	26.2
A45.J1:4	O_LHFogLb	Left Hand Fog Light Bulb	26.3	L95:A	B_BatterySaver	.	
					B_TstModExtLight	.	
					I_FogLightSw	A55.J1:6	26.3
A45.J1:5	O_LHCornerLb	Left Hand Cornering Light Bulb	26.3	L97.A:1	B_BatterySaver	.	
					B_TstModExtLight	.	
					I_CorneringLtSw	A55.J1:7	26.3
					I_LHFlshSw	A45.J1:9	26.1
A45.J1:6	O_LHHiBmLb	Left Hand Hi Beam Light Bulb	26.1	L60.B:1	B_BatterySaver	.	
					B_EngineRun	.	
					B_OneAltCharging	.	
					B_TstModExtLight	.	
					I_HdLtHiLowBmSw	A43.J1:8	26.1
					I_HdLtPos2SwLH	A45.J1:12	26.1
					I_HiBeamCallSw	A43.J1:3	26.1
A45.J1:7	O_LHLwBmLb	Left Hand Low Beam Light Bulb	26.1	L60.A:1	B_BatterySaver	.	
					B_TstModExtLight	.	
					I_HdLtPos2SwLH	A45.J1:12	26.1
A45.J1:8	O_FlshAudiRel	Flasher Audible Relay	26.1	R16:86	I_HazardSw	A36.JB:4	26.1
					I_IgnKeySw	A36.JB:2	3.2
					I_LHFlshSw	A45.J1:9	26.1
					I_LHFlshSwRrSig	A51.J1:9	26.2
					I_RHFlshSw	A48.J1:12	26.1
					I_RHFlshSwRrSig	A51.J1:12	26.2
A46.J1:1	O_AuxFanSpeed	Auxiliary fan speed control	18.3	A32.A:D	B_BatterySaver	.	
					B_EngineRun	.	

MULTIPLEX OUTPUT LIST

O_xx... = Physical Ouput Pin ; I_xx... = Physical Input Pin ; D_xx... = CAN Network Signal from the HVAC control Head ; B_xx.. = Multiplex system global Network Variable

Module.Pin#	Signal name	Description	Page	Connected devices	Input involved		
A46.J1:1	O_AuxFanSpeed	Auxiliary fan speed control	18.3	A32.A:D	B_OneAltCharging	.	
					D_AuxFanSpdBit0	.	
					D_AuxFanSpdBit1	.	
					D_AuxFanSpdBit2	.	
					D_AuxFnOnOffSw	.	
					I_BatMonMod46	A46.J1:24	6.1
					I_IgnKeySw	A36.JB:2	3.2
A46.J1:21	O_HeadLmpWsh		34.1	Mo54:2	I_HeadLmpWshSw	A55.J1:18	34.1
A46.J1:3	O_LwWshPmp	Lower Wiper Washer Pump	34.1		B_BatterySaver	.	
					I_LwWshSw	A46.J1:9	34.1
A46.J1:5	O_DrvRfgSol	Driver refrigerent solenoid	18.1	D2.A:1	B_BatterySaver	.	
					B_EngineRun	.	
					B_LowVoltage	.	
					B_TestMode	.	
					B_TstModHvac	.	
					B_TstModSAC	.	
					I_AcPresHiSSe	A52.J1:13	18.2
					I_AcPresLoSSe	A52.J1:14	18.2
					I_FrontOutTemp	A47.J1:14	18.3
					I_OutDoorTempSe	A54.J1:14	18.1
A46.J1:6	O_DrvHeatSol	Driver Heat Solenoid	18.1	So8:1	B_BatterySaver	.	
					B_EngineRun	.	
					B_LowVoltage	.	
					B_OneAltCharging	.	
					B_TestMode	.	
					B_TstModHvac	.	
					B_TstModSAC	.	
					D_AirFlapBit0	.	
					D_AirFlapBit1	.	
					D_AirFlapBit2	.	
					D_AuxFanSpdBit0	.	
					D_AuxFanSpdBit1	.	
					D_AuxFanSpdBit2	.	
					D_DriverSetPts	.	
					D_DrvFnSpdBit0	.	
					D_DrvFnSpdBit1	.	
					D_DrvFnSpdBit2	.	
					D_OnOffPassSw	.	
					D_PassSetPts	.	
					I_BatMonMod46	A46.J1:24	6.1
					I_BatMonMod54	A54.J1:24	6.1
					I_DefrostHighSw	A47.J1:10	18.1
					I_DefrostLowSw	A47.J1:12	18.1

MULTIPLEX OUTPUT LIST

O_xx... = Physical Ouput Pin ; I_xx... = Physical Input Pin ; D_xx... = CAN Network Signal from the HVAC control Head ; B_xx.. = Multiplex system global Network Variable

Module.Pin#	Signal name	Description	Page	Connected devices	Input involved		
A46.J1:6	O_DrvHeatSol	Driver Heat Solenoid	18.1	So8:1	I_DrvTempSe	A55.J1:1	18.1
					I_FireExt1stAl	A36.JB:23	
					I_FireExt2ndAlm	A44.J1:10	
					I_FireSensorA36	A41.J1:10	9.1
					I_FrontOutTemp	A47.J1:14	18.3
					I_OutDoorTempSe	A54.J1:14	18.1
A46.J1:8	O_AuxSolValve	Auxiliary refrigerant solenoid valve	18.3	So38:A	B_BatterySaver	.	
					B_EngineRun	.	
					B_TestMode	.	
					B_TstModSAC	.	
					D_AuxFnOnOffSw	.	
					I_AcPresHiSSe	A52.J1:13	18.2
					I_AcPresLoSSe	A52.J1:14	18.2
A47.J1:1	O_DrvDefFanMo	Driver Defroster Fan Motor	18.1	A24.B:B	B_BatterySaver	.	
					B_EngineRun	.	
					B_LowVoltage	.	
					D_DrvFnSpdBit0	.	
					D_DrvFnSpdBit1	.	
					D_DrvFnSpdBit2	.	
					D_OnOffDrvSw	.	
					I_BatMonMod47	A47.J1:24	6.1
					I_IgnKeySw	A36.JB:2	3.2
A47.J1:2	O_DrvRecTrap	Driver Recycle Trap	18.1	L203:A	B_BatterySaver	.	
					B_EngineRun	.	
					B_TestMode	.	
					B_TstModHvac	.	
					B_TstModSAC	.	
					D_RecSw	.	
A47.J1:20	O_AuxWaterPump	Auxiliary water pump	18.3		B_BatterySaver	.	
					B_EngineRun	.	
					B_OneAltCharging	.	
					B_TestMode	.	
					B_TstModSAC	.	
					D_AuxFanSpdBit0	.	
					D_AuxFanSpdBit1	.	
					D_AuxFanSpdBit2	.	
					D_DriverSetPts	.	
					D_DrvFnSpdBit0	.	
					D_DrvFnSpdBit1	.	
					D_DrvFnSpdBit2	.	
					I_DefrostHighSw	A47.J1:10	18.1
					I_DefrostLowSw	A47.J1:12	18.1
					I_FrontOutTemp	A47.J1:14	18.3

MULTIPLEX OUTPUT LIST

O_xx... = Physical Ouput Pin ; I_xx... = Physical Input Pin ; D_xx... = CAN Network Signal from the HVAC control Head ; B_xx.. = Multiplex system global Network Variable

Module.Pin#	Signal name	Description	Page	Connected devices	Input involved		
A47.J1:20	O_AuxWaterPump	Auxiliary water pump	18.3		I_OutDoorTempSe	A54.J1:14	18.1
A47.J1:3	O_LwWipSpd1	Lower Wiper Speed 1	34.1	R23:86	B_BatterySaver	.	
					I_LwWipIntSw	A42.J1:8	34.1
					I_LwWshSw	A46.J1:9	34.1
A47.J1:5	O_EntDorStpLb	Entrance Door Step Light Bulb	29.1		I_AccKeySw	A36.JB:6	3.2
					I_EntDorOpSe	A41.J1:5	29.1
					I_EntDrUnlockSw	A41.J1:8	29.1
					I_HazardSw	A36.JB:4	26.1
					I_IgnKeySw	A36.JB:2	3.2
					I_KeylessDrUnl	A41.J1:4	29.1
					I_KeylessLuggUnl	A41.J1:18	29.1
					I_LugDorLkSw	A41.J1:17	33.1
					I_RrCutOutSw	A36.JB:21	3.2
					I_WakeUp	A36.JB:5	9.1
A47.J1:6	O_DriverLtLb	Driver Light Bulb	19.1		B_BatterySaver	.	
					I_DrvLtSw	A41.J1:2	19.1
A47.J1:7	O_RHDefrostFan	Passenger defrost fan speed control	18.1	A30.A:D	B_BatterySaver	.	
					B_EngineRun	.	
					B_LowVoltage	.	
					D_DrvFnSpdBit0	.	
					D_DrvFnSpdBit1	.	
					D_DrvFnSpdBit2	.	
					D_OnOffDrvSw	.	
					I_BatMonMod47	A47.J1:24	6.1
					I_DefrostHighSw	A47.J1:10	18.1
					I_DefrostLowSw	A47.J1:12	18.1
					I_IgnKeySw	A36.JB:2	3.2
A48.J1:1	O_DoorUnlockMo	Entrance door unlock motor	29.1		I_AccKeySw	A36.JB:6	3.2
					I_EntDorOpSe	A41.J1:5	29.1
					I_EntDrUnlockSw	A41.J1:8	29.1
					I_EntDrUnSw	A48.J1:9	29.1
					I_HazardSw	A36.JB:4	26.1
					I_IgnKeySw	A36.JB:2	3.2
					I_KeylessDrUnl	A41.J1:4	29.1
					I_RrCutOutSw	A36.JB:21	3.2
					I_WakeUp	A36.JB:5	9.1
A48.J1:2	O_DoorLockMo	Entrance door lock motor	29.1		I_AccKeySw	A36.JB:6	3.2
					I_EntDorLockSw	A41.J1:9	29.1
					I_EntDorOpSe	A41.J1:5	29.1
					I_EntDrUnlockSw	A41.J1:8	29.1
					I_HazardSw	A36.JB:4	26.1
					I_IgnKeySw	A36.JB:2	3.2
					I_KeylessLockAll	A41.J1:19	29.1

MULTIPLEX OUTPUT LIST

O_xx... = Physical Ouput Pin ; I_xx... = Physical Input Pin ; D_xx... = CAN Network Signal from the HVAC control Head ; B_xx.. = Multiplex system global Network Variable

Module.Pin#	Signal name	Description	Page	Connected devices	Input involved		
A48.J1:2	O_DoorLockMo	Entrance door lock motor	29.1		I_RrCutOutSw	A36.JB:21	3.2
					I_WakeUp	A36.JB:5	9.1
A48.J1:20	O_RHFrSidFlshLb	RH Front Side Flasher L-Bulb	26.1	L64:1	B_BatterySaver	.	
					B_TstModExtLight	.	
					I_LHFlshSwRrSig	A51.J1:9	26.2
					I_RHFlshSw	A48.J1:12	26.1
					I_RHFlshSwRrSig	A51.J1:12	26.2
A48.J1:3	O_RHHiBeamLb	Right Hand Hi Beam Light Bulb	26.1	L59.B:1	B_BatterySaver	.	
					B_EngineRun	.	
					B_OneAltCharging	.	
					B_TstModExtLight	.	
					I_HdLtHiLowBmSw	A43.J1:8	26.1
					I_HdLtPos2SwLH	A45.J1:12	26.1
					I_HiBeamCallSw	A43.J1:3	26.1
A48.J1:4	O_RHLwBeamLb	Right Hand Low Beam Light Bulb	26.1	L59.A:1	B_BatterySaver	.	
					B_TstModExtLight	.	
					I_HdLtPos2SwRH	A48.J1:10	26.1
A48.J1:5	O_RHCornerLb	Right Hand Cornering Light Bulb	26.3	L98.A:1	B_BatterySaver	.	
					B_TstModExtLight	.	
					I_CorneringLtSw	A55.J1:7	26.3
					I_RHFlshSw	A48.J1:12	26.1
A48.J1:6	O_RHFrFlshLb	Right Hand Front Flasher Light Bulb	26.1	L61:3	B_BatterySaver	.	
					B_TstModExtLight	.	
					I_LHFlshSwRrSig	A51.J1:9	26.2
					I_RHFlshSw	A48.J1:12	26.1
					I_RHFlshSwRrSig	A51.J1:12	26.2
A48.J1:7	O_RHFrMrkLb	Right Hand Front Markers Light Bulb	26.1		B_BatterySaver	.	
					B_TstModExtLight	.	
					I_BlinkSw	A43.J1:20	26.1
					I_HdLtPos1Sw	A43.J1:4	26.1
					I_HdLtPos2SwLH	A45.J1:12	26.1
					I_KeylessIntru	A41.J1:7	29.1
					I_KeylessPanic	A41.J1:6	29.1
A50.J1:2	O_TransInhibit	Transmission Inhibit	15.1		I_BrkLtSeFrSig	A36.JB:13	12.1
					I_BrkLtSeRrSig	A51.J1:10	12.1
					I_SldO1LimitInSe	A56.J1:11	20.1
					I_SldO2LimitInSe	A57.J1:11	20.1
					I_SldO3LimitInSe	A58.J1:11	20.2
A50.J1:20	O_RevLbBuz	Reverse Alarm and Light Bulb	26.3		B_BatterySaver	.	
					B_EngineRun	.	
					B_TestMode	.	
					B_TestSwBuz2	.	
					B_TestSwBuzzer	.	

MULTIPLEX OUTPUT LIST

O_xx... = Physical Ouput Pin ; I_xx... = Physical Input Pin ; D_xx... = CAN Network Signal from the HVAC control Head ; B_xx.. = Multiplex system global Network Variable

Module.Pin#	Signal name	Description	Page	Connected devices	Input involved		
A50.J1:20	O_RevLbBuz	Reverse Alarm and Light Bulb	26.3		B_TstModExtLight	.	
					B_TstModHvac	.	
					B_TstModHvacNext	.	
					B_TstModSAC	.	
					B_TstModSACNext	.	
					B_TstSwBuz3	.	
A50.J1:3	O_RevAlarm	Back up alarm	26.3	L187.A:A	B_BatterySaver	.	
					B_EngineRun	.	
					B_TestMode	.	
					B_TestSwBuz2	.	
					B_TestSwBuzzer	.	
					B_TstModExtLight	.	
					B_TstModHvac	.	
					B_TstModHvacNext	.	
					B_TstModSAC	.	
					B_TstModSACNext	.	
					B_TstSwBuz3	.	
					D_NextWheel	.	
					I_RevAlrmSw	A43.J1:6	26.3
A50.J1:4	O_ReClearLb	Rear Clearance Light Bulb	26.2		B_BatterySaver	.	
					B_TstModExtLight	.	
					I_BlinkSw	A43.J1:20	26.1
					I_HdLtPos1Sw	A43.J1:4	26.1
					I_HdLtPos2SwLH	A45.J1:12	26.1
A50.J1:5	O_LHCtrFlshLb	Water Filter Indicator Warning	26.2	L70:1	B_BatterySaver	.	
					B_TstModExtLight	.	
					I_LHFlshSwRrSig	A51.J1:9	26.2
					I_RHFlshSwRrSig	A51.J1:12	26.2
A50.J1:6	O_BrLtLowerLb		26.2		B_BatterySaver	.	
					B_EngineRun	.	
					B_TstModExtLight	.	
					I_BrkLtSeFrSig	A36.JB:13	12.1
					I_BrkLtSeRrSig	A51.J1:10	12.1
					I_EngBrOnSe	A42.J1:18	
					I_IgnKeySw	A36.JB:2	3.2
					I_RetdrSig	A50.J1:12	15.1
A50.J1:7	O_RHCtrFlshLb	Wheel Chair Lift Warning Indicator	26.2	L68:1	B_BatterySaver	.	
					B_TstModExtLight	.	
					I_LHFlshSwRrSig	A51.J1:9	26.2
					I_RHFlshSwRrSig	A51.J1:12	26.2
A50.J1:8	O_CtrSdMrkLb	Tag Axle Warning Indicator	26.2		B_BatterySaver	.	
					B_TstModExtLight	.	
					I_BlinkSw	A43.J1:20	26.1

MULTIPLEX OUTPUT LIST

O_xx... = Physical Ouput Pin ; I_xx... = Physical Input Pin ; D_xx... = CAN Network Signal from the HVAC control Head ; B_xx.. = Multiplex system global Network Variable

Module.Pin#	Signal name	Description	Page	Connected devices	Input involved		
A50.J1:8	O_CtrSdMrkLb	Tag Axle Warning Indicator	26.2		I_HdLtPos1Sw	A43.J1:4	26.1
					I_HdLtPos2SwLH	A45.J1:12	26.1
A51.J1:1	O_SerBrkTrans	Servise Brake Signal For	15.1	A1Gen4.A:62	I_BrkLtSeFrSig	A36.JB:13	12.1
A51.J1:21	O_LHReFlshLb	Left Hand Rear Flasher Light Bulb	26.2		B_BatterySaver	.	
					B_TstModExtLight	.	
					I_LHFlshSwRrSig	A51.J1:9	26.2
					I_RHFlshSwRrSig	A51.J1:12	26.2
A51.J1:3	O_RHReFlshLb	Right Hand Rear Flasher Light Bulb	26.2		B_BatterySaver	.	
					B_TstModExtLight	.	
					I_LHFlshSwRrSig	A51.J1:9	26.2
					I_RHFlshSwRrSig	A51.J1:12	26.2
A51.J1:4	O_LHDockLb	Left Hand Docking Light Bulb	26.3	L93.A:1	B_BatterySaver	.	
					B_TstModExtLight	.	
					I_DockingLtSw	A55.J1:8	26.3
					I_LowDockLtsSw	A55.J1:9	26.3
A51.J1:5	O_RHDockLb	Right Hand Docking Light Bulb	26.3	L94.A:1	B_BatterySaver	.	
					B_TstModExtLight	.	
					I_DockingLtSw	A55.J1:8	26.3
					I_LowDockLtsSw	A55.J1:9	26.3
A51.J1:6	O_BrLtUpperLb		26.2		B_BatterySaver	.	
					B_EngineRun	.	
					B_TstModExtLight	.	
					I_BrkLtSeFrSig	A36.JB:13	12.1
					I_BrkLtSeRrSig	A51.J1:10	12.1
					I_EngBrOnSe	A42.J1:18	
					I_RetdrSig	A50.J1:12	15.1
A51.J1:7	O_CyclopeLt	Cyclope Brake Light	26.2	L81.A:1	B_BatterySaver	.	
					B_TstModExtLight	.	
					I_BrkLtSeFrSig	A36.JB:13	12.1
					I_BrkLtSeRrSig	A51.J1:10	12.1
A51.J1:8	O_ReTailMkLb	Rear Tail Markers Light Bulb	26.2		B_BatterySaver	.	
					B_TstModExtLight	.	
					I_AccKeySw	A36.JB:6	3.2
					I_BlinkSw	A43.J1:20	26.1
					I_EntDrUnlockSw	A41.J1:8	29.1
					I_HazardSw	A36.JB:4	26.1
					I_HdLtPos1Sw	A43.J1:4	26.1
					I_HdLtPos2SwLH	A45.J1:12	26.1
					I_IgnKeySw	A36.JB:2	3.2
					I_KeylessDrUnl	A41.J1:4	29.1
					I_KeylessIntru	A41.J1:7	29.1
					I_KeylessPanic	A41.J1:6	29.1
					I_RrCutOutSw	A36.JB:21	3.2

MULTIPLEX OUTPUT LIST

O_xx... = Physical Ouput Pin ; I_xx... = Physical Input Pin ; D_xx... = CAN Network Signal from the HVAC control Head ; B_xx.. = Multiplex system global Network Variable

Module.Pin#	Signal name	Description	Page	Connected devices	Input involved		
A51.J1:8	O_ReTailMkLb	Rear Tail Markers Light Bulb	26.2		I_WakeUp	A36.JB:5	9.1
A52.J1:1	O_EngFanSpd1	Engine Fan Radiator Speed 1	13.1		B_BatterySaver	.	
					B_EngineRun	.	
					B_TestMode	.	
					B_TstModHvac	.	
					B_TstModSAC	.	
					I_AcPresHiSSe	A52.J1:13	18.2
					I_EngFanSpd1	A52.J1:9	13.1
					I_EngFanSw	A36.JB:14	
					I_FireExt1stAl	A36.JB:23	
					I_FireExt2ndAlm	A44.J1:10	
					I_FireSensorA36	A41.J1:10	9.1
A52.J1:2	O_EngFanSpd2	Engine Fan Radiator Speed 2	13.1		B_BatterySaver	.	
					B_EngineRun	.	
					B_TestMode	.	
					B_TstModHvac	.	
					B_TstModSAC	.	
					I_AcPresHiSSe	A52.J1:13	18.2
					I_EngFanSpd1	A52.J1:9	13.1
					I_EngFanSpd2	A52.J1:10	13.1
					I_EngFanSw	A36.JB:14	
					I_FireExt1stAl	A36.JB:23	
					I_FireExt2ndAlm	A44.J1:10	
					I_FireSensorA36	A41.J1:10	9.1
A52.J1:20	O_AcCluSol	Hvac AC Clutch Solenoid	18.2		B_BatterySaver	.	
					B_EngineRun	.	
					B_TestMode	.	
					B_TstModHvac	.	
					B_TstModSAC	.	
					I_AcPresHiSSe	A52.J1:13	18.2
					I_AcPresLoSSe	A52.J1:14	18.2
A52.J1:21	O_AcUnldRH	Hvac Right Hand Cylinder Unloader	18.2		B_BatterySaver	.	
					B_EngineRun	.	
					B_TestMode	.	
					B_TstModHvac	.	
					D_PassSetPts	.	
					I_AcPresHiSSe	A52.J1:13	18.2
					I_AcPresLoSSe	A52.J1:14	18.2
A52.J1:5	O_EngCmptLbZF	Engine Compartiment Light Switch	25.1		I_EngCmptLtSw	A52.J1:11	25.1
					I_EngDoorSe	A52.J1:12	25.1
A52.J1:8	O_AcUnldLH	Hvac Left Hand Cylinder Unloader	18.2		B_BatterySaver	.	
					B_EngineRun	.	
					B_TestMode	.	

MULTIPLEX OUTPUT LIST

O_xx... = Physical Ouput Pin ; I_xx... = Physical Input Pin ; D_xx... = CAN Network Signal from the HVAC control Head ; B_xx.. = Multiplex system global Network Variable

Module.Pin#	Signal name	Description	Page	Connected devices	Input involved		
A52.J1:8	O_AcUnldLH	Hvac Left Hand Cylinder Unloader	18.2		B_TstModHvac	.	
					D_PassSetPts	.	
					I_AcPresHiSSe	A52.J1:13	18.2
					I_AcPresLoSSe	A52.J1:14	18.2
A53.J1:1	O_StarterRlyRtn	Starter Relay Return	3.2	Term49	I_IgnKeySw	A36.JB:2	3.2
A53.J1:5	O_RJBDoFanMo	Rear junction box door fan	11.1	Mo53:1	B_BatterySaver	.	
					B_EngineRun	.	
					B_TestMode	.	
					B_TstModHvac	.	
					B_TstModSAC	.	
					I_BatMonMod53	A53.J1:24	6.1
					I_FrontOutTemp	A47.J1:14	18.3
					I_OutDoorTempSe	A54.J1:14	18.1
A53.J1:6	O_StarterRel	Starter Relay	3.2		B_BatterySaver	.	
					B_EngineRun	.	
					B_TestMode	.	
					B_TstModHvac	.	
					B_TstModSAC	.	
					I_AccKeySw	A36.JB:6	3.2
					I_EngStaRrSw	A53.J1:11	3.2
					I_EntDrUnlockSw	A41.J1:8	29.1
					I_FrEngStaSw	A36.JB:22	3.2
					I_FrStrtEnSw	A53.J1:9	3.2
					I_HazardSw	A36.JB:4	26.1
					I_IgnKeySw	A36.JB:2	3.2
					I_KeylessDrUnl	A41.J1:4	29.1
					I_KeylessIntru	A41.J1:7	29.1
					I_NeutralSe	A50.J1:11	15.1
					I_RrCutOutSw	A36.JB:21	3.2
					I_RrStrtEnSw	A53.J1:10	3.2
					I_StartLockOut	A53.J1:12	
					I_WakeUp	A36.JB:5	9.1
A54.J1:1	O_CndSpd2Rel	Condensor Fan Speed 2 Relay	18.2	R9:2	B_BatterySaver	.	
					B_EngineRun	.	
					B_LowVoltage	.	
					B_TestMode	.	
					B_TstModHvac	.	
					D_DriverSetPts	.	
					D_OnOffPassSw	.	
					D_PassSetPts	.	
					I_AcPresHiSSe	A52.J1:13	18.2
					I_AcPresLoSSe	A52.J1:14	18.2
					I_BatMonMod54	A54.J1:24	6.1

MULTIPLEX OUTPUT LIST

O_xx... = Physical Ouput Pin ; I_xx... = Physical Input Pin ; D_xx... = CAN Network Signal from the HVAC control Head ; B_xx.. = Multiplex system global Network Variable

Module.Pin#	Signal name	Description	Page	Connected devices	Input involved		
A54.J1:1	O_CndSpd2Rel	Condensor Fan Speed 2 Relay	18.2	R9:2	I_CoilTherSe	A47.J1:11	18.3
					I_DrvTempSe	A55.J1:1	18.1
					I_FireExt1stAl	A36.JB:23	
					I_FireExt2ndAlm	A44.J1:10	
					I_FireSensorA36	A41.J1:10	9.1
					I_FrontOutTemp	A47.J1:14	18.3
					I_OutDoorTempSe	A54.J1:14	18.1
A54.J1:2	O_EvaSpd2Rel	Evaporator Fan Speed 2	18.2	TermMo9	B_BatterySaver	.	
					B_EngineRun	.	
					B_LowVoltage	.	
					B_TestMode	.	
					B_TstModHvac	.	
					D_OnOffPassSw	.	
					D_PassSetPts	.	
					I_Alt2Voltage	A49.J1:9	3.2
					I_BatMonMod53	A53.J1:24	6.1
					I_BatMonMod54	A54.J1:24	6.1
					I_FireExt1stAl	A36.JB:23	
					I_FireExt2ndAlm	A44.J1:10	
					I_FireSensorA36	A41.J1:10	9.1
A54.J1:20	O_ACRecPass	A/C Pass. Gaz Cylinder Recycle	18.2	L205:1	B_BatterySaver	.	
					B_EngineRun	.	
					B_TestMode	.	
					B_TstModHvac	.	
					B_TstModSAC	.	
					D_RecSw	.	
A54.J1:3	O_PasRfgSol	Passenger Refrigerent Solenoid	18.2	D11.A:1	B_BatterySaver	.	
					B_EngineRun	.	
					B_LowVoltage	.	
					B_TestMode	.	
					B_TstModHvac	.	
					D_DriverSetPts	.	
					D_OnOffPassSw	.	
					D_PassSetPts	.	
					I_BatMonMod54	A54.J1:24	6.1
					I_CoilTherSe	A47.J1:11	18.3
					I_DrvTempSe	A55.J1:1	18.1
					I_FireExt1stAl	A36.JB:23	
					I_FireExt2ndAlm	A44.J1:10	
					I_FireSensorA36	A41.J1:10	9.1
					I_FrontOutTemp	A47.J1:14	18.3
					I_OutDoorTempSe	A54.J1:14	18.1
A54.J1:4	O_ACWaterPm	Hvac Water Pump	18.2		B_BatterySaver	.	

MULTIPLEX OUTPUT LIST

O_xx... = Physical Ouput Pin ; I_xx... = Physical Input Pin ; D_xx... = CAN Network Signal from the HVAC control Head ; B_xx.. = Multiplex system global Network Variable

Module.Pin#	Signal name	Description	Page	Connected devices	Input involved		
A54.J1:4	O_ACWaterPmp	Hvac Water Pump	18.2		B_EngineRun	.	
					B_OneAltCharging	.	
					B_TestMode	.	
					B_TstModHvac	.	
					D_DrvFnSpdBit0	.	
					D_DrvFnSpdBit1	.	
					D_DrvFnSpdBit2	.	
					D_OnOffPassSw	.	
					D_PassSetPts	.	
					I_BatMonMod54	A54.J1:24	6.1
					I_FireExt1stAl	A36.JB:23	
					I_FireExt2ndAlm	A44.J1:10	
					I_FireSensorA36	A41.J1:10	9.1
					I_FrontOutTemp	A47.J1:14	18.3
					I_OutDoorTempSe	A54.J1:14	18.1
A54.J1:5	O_CndSpd1Rel	Condensor Fan Speed 1 Relay	18.2	R10:2	B_BatterySaver	.	
					B_EngineRun	.	
					B_LowVoltage	.	
					B_TestMode	.	
					B_TstModHvac	.	
					D_DriverSetPts	.	
					D_OnOffPassSw	.	
					D_PassSetPts	.	
					I_AcPresHiSSe	A52.J1:13	18.2
					I_AcPresLoSSe	A52.J1:14	18.2
					I_BatMonMod54	A54.J1:24	6.1
					I_CoilTherSe	A47.J1:11	18.3
					I_DrvTempSe	A55.J1:1	18.1
					I_FireExt1stAl	A36.JB:23	
					I_FireExt2ndAlm	A44.J1:10	
					I_FireSensorA36	A41.J1:10	9.1
					I_FrontOutTemp	A47.J1:14	18.3
					I_OutDoorTempSe	A54.J1:14	18.1
A54.J1:7	O_EvaSpd1Rel	Evaporator Fan Speed 1 Relay	18.2	R12:2	B_BatterySaver	.	
					B_EngineRun	.	
					B_LowVoltage	.	
					B_TestMode	.	
					B_TstModHvac	.	
					D_OnOffPassSw	.	
					I_BatMonMod54	A54.J1:24	6.1
					I_FireExt1stAl	A36.JB:23	
					I_FireExt2ndAlm	A44.J1:10	
					I_FireSensorA36	A41.J1:10	9.1

MULTIPLEX OUTPUT LIST

O_xx... = Physical Ouput Pin ; I_xx... = Physical Input Pin ; D_xx... = CAN Network Signal from the HVAC control Head ; B_xx.. = Multiplex system global Network Variable

Module.Pin#	Signal name	Description	Page	Connected devices	Input involved		
A54.J1:8	O_PasHeatSol	Passenger Heat Solenoid Valve	18.2	So13:1	B_BatterySaver	.	
					B_EngineRun	.	
					B_OneAltCharging	.	
					B_TestMode	.	
					B_TstModHvac	.	
					B_TstModSAC	.	
					D_AuxFanSpdBit0	.	
					D_AuxFanSpdBit1	.	
					D_AuxFanSpdBit2	.	
					D_DriverSetPts	.	
					D_DrvFnSpdBit0	.	
					D_DrvFnSpdBit1	.	
					D_DrvFnSpdBit2	.	
					D_OnOffPassSw	.	
					D_PassSetPts	.	
					I_BatMonMod54	A54.J1:24	6.1
					I_DefrostHighSw	A47.J1:10	18.1
					I_DefrostLowSw	A47.J1:12	18.1
					I_FireExt1stAl	A36.JB:23	
					I_FireExt2ndAlm	A44.J1:10	
					I_FireSensorA36	A41.J1:10	9.1
					I_FrontOutTemp	A47.J1:14	18.3
					I_OutDoorTempSe	A54.J1:14	18.1
A55.J1:12	O_JacobBrk1	Jacob Brake 1	38.1		I_RetarderSel	A55.J1:10	12.1
A55.J1:13	O_SunVisorDown		38.1		I_VIPSteerWh1	A55.J1:3	38.1
					I_VIPSteerWh2	A55.J1:4	38.1
					I_VIPSteerWh5V	A55.J1:2	38.1
A55.J1:14	O_JacobBrk2	Jacob Brake 2	38.1		I_RetarderSel	A55.J1:10	12.1
A55.J1:30	O_SunVisrDrvPass		38.1	R45:86	I_VIPSteerWh1	A55.J1:3	38.1
					I_VIPSteerWh2	A55.J1:4	38.1
					I_VIPSteerWh5V	A55.J1:2	38.1
A56.J1:1	O_SldO1MoSpeedA	Slide-Out 1 Motor Speed Control A	20.1		I_BatMonMod56	A56.J1:24	6.1
					I_SldO1CloseSw	A56.J1:10	20.1
					I_SldO1LimiOutSw	A56.J1:14	20.1
					I_SldO1LimitInSe	A56.J1:11	20.1
					I_SldO1OpenSw	A56.J1:9	20.1
					I_SldO1PBrakeSw	A56.J1:12	20.1
					I_SldO1VacPrSe	A56.J1:13	20.1
A56.J1:2	O_SldO1MoSpeedB	Slide-Out 1 Motor Speed Control B	20.1		I_BatMonMod56	A56.J1:24	6.1
					I_SldO1CloseSw	A56.J1:10	20.1
					I_SldO1LimiOutSw	A56.J1:14	20.1
					I_SldO1LimitInSe	A56.J1:11	20.1
					I_SldO1OpenSw	A56.J1:9	20.1

MULTIPLEX OUTPUT LIST

O_xx... = Physical Ouput Pin ; I_xx... = Physical Input Pin ; D_xx... = CAN Network Signal from the HVAC control Head ; B_xx.. = Multiplex system global Network Variable

Module.Pin#	Signal name	Description	Page	Connected devices	Input involved		
A56.J1:2	O_SldO1MoSpeedB	Slide-Out 1 Motor Speed Control B	20.1		I_SldO1PBrakeSw	A56.J1:12	20.1
					I_SldO1VacPrSe	A56.J1:13	20.1
A56.J1:20	O_SldO1Motpos	Slide_Out 1 Motor +	20.1	RSo1.B:1	I_BatMonMod56	A56.J1:24	6.1
					I_SldO1CloseSw	A56.J1:10	20.1
					I_SldO1LimiOutSw	A56.J1:14	20.1
					I_SldO1LimitInSe	A56.J1:11	20.1
					I_SldO1OpenSw	A56.J1:9	20.1
					I_SldO1PBrakeSw	A56.J1:12	20.1
					I_SldO1VacPrSe	A56.J1:13	20.1
A56.J1:21	O_SldO1SecuPinSo	Slide-Out 1 Security Pins	20.1	SOSO4:1	I_SldO1LimitInSe	A56.J1:11	20.1
					I_SldO1PBrakeSw	A56.J1:12	20.1
					I_SldO2LimitInSe	A57.J1:11	20.1
					I_SldO2PBrakeSw	A57.J1:12	20.1
					I_SldO3LimitInSe	A58.J1:11	20.2
					I_SldO3PBrakeSw	A58.J1:12	20.2
A56.J1:3	O_SldO1RemoteLed	Slide_Out 1 Remote Led	20.1	SwSo1.A:2	I_BatMonMod56	A56.J1:24	6.1
					I_SldO1CloseSw	A56.J1:10	20.1
					I_SldO1LimiOutSw	A56.J1:14	20.1
					I_SldO1LimitInSe	A56.J1:11	20.1
					I_SldO1OpenSw	A56.J1:9	20.1
					I_SldO1PBrakeSw	A56.J1:12	20.1
					I_SldO1Supply5v	A56.J1:15	20.1
					I_SldO1VacPrSe	A56.J1:13	20.1
A56.J1:4	O_SldO1SealInfSo	Slide_Out 1 Seal Inflating Valve	20.1	SoSo5:1	I_SldO1CloseSw	A56.J1:10	20.1
					I_SldO1LimiOutSw	A56.J1:14	20.1
					I_SldO1LimitInSe	A56.J1:11	20.1
					I_SldO1OpenSw	A56.J1:9	20.1
A56.J1:5	O_SldO1SealDefSo	Slide_Out 1 Seal Deflating Valve	20.1	SoSo1:1	I_BatMonMod56	A56.J1:24	6.1
					I_SldO1CloseSw	A56.J1:10	20.1
					I_SldO1LimiOutSw	A56.J1:14	20.1
					I_SldO1LimitInSe	A56.J1:11	20.1
					I_SldO1OpenSw	A56.J1:9	20.1
					I_SldO1PBrakeSw	A56.J1:12	20.1
A56.J1:6	O_SldO1VaccGenSo	Slide_Out 1 Seal Vaccum Generator	20.1	SoSo2:1	I_BatMonMod56	A56.J1:24	6.1
					I_BatMonMod57	A57.J1:24	6.1
					I_BatMonMod58	A58.J1:24	6.1
					I_SldO1CloseSw	A56.J1:10	20.1
					I_SldO1LimiOutSw	A56.J1:14	20.1
					I_SldO1LimitInSe	A56.J1:11	20.1
					I_SldO1OpenSw	A56.J1:9	20.1
					I_SldO1PBrakeSw	A56.J1:12	20.1
					I_SldO2CloseSw	A57.J1:10	20.1
					I_SldO2LimiOutSw	A57.J1:14	20.1

MULTIPLEX OUTPUT LIST

O_xx... = Physical Ouput Pin ; I_xx... = Physical Input Pin ; D_xx... = CAN Network Signal from the HVAC control Head ; B_xx.. = Multiplex system global Network Variable

Module.Pin#	Signal name	Description	Page	Connected devices	Input involved		
A56.J1:6	O_SldO1VaccGenSo	Slide_Out 1 Seal Vaccum Generator	20.1	SoSo2:1	I_SldO2LimitInSe	A57.J1:11	20.1
					I_SldO2OpenSw	A57.J1:9	20.1
					I_SldO2PBrakeSw	A57.J1:12	20.1
					I_SldO3CloseSw	A58.J1:10	20.2
					I_SldO3LimiOutSw	A58.J1:14	20.2
					I_SldO3LimitInSe	A58.J1:11	20.2
					I_SldO3OpenSw	A58.J1:9	20.2
					I_SldO3PBrakeSw	A58.J1:12	20.2
A56.J1:7	O_SldO1Motneg	Slide_Out 1 Motor -	20.1	RSo2.B:1	I_BatMonMod56	A56.J1:24	6.1
					I_SldO1CloseSw	A56.J1:10	20.1
					I_SldO1LimiOutSw	A56.J1:14	20.1
					I_SldO1LimitInSe	A56.J1:11	20.1
					I_SldO1OpenSw	A56.J1:9	20.1
					I_SldO1PBrakeSw	A56.J1:12	20.1
					I_SldO1VacPrSe	A56.J1:13	20.1
A57.J1:1	O_SldO2MoSpeedA	Slide-Out 2 Motor Speed Control A	20.1		I_BatMonMod57	A57.J1:24	6.1
					I_SldO1VacPrSe	A56.J1:13	20.1
					I_SldO2CloseSw	A57.J1:10	20.1
					I_SldO2LimiOutSw	A57.J1:14	20.1
					I_SldO2LimitInSe	A57.J1:11	20.1
					I_SldO2OpenSw	A57.J1:9	20.1
					I_SldO2PBrakeSw	A57.J1:12	20.1
A57.J1:2	O_SldO2MoSpeedB	Slide-Out 2 Motor Speed Control B	20.1		I_BatMonMod57	A57.J1:24	6.1
					I_SldO1VacPrSe	A56.J1:13	20.1
					I_SldO2CloseSw	A57.J1:10	20.1
					I_SldO2LimiOutSw	A57.J1:14	20.1
					I_SldO2LimitInSe	A57.J1:11	20.1
					I_SldO2OpenSw	A57.J1:9	20.1
					I_SldO2PBrakeSw	A57.J1:12	20.1
A57.J1:20	O_SldO2Motpos	Slide_Out 2 Motor +	20.1	RSo3.B:1	I_BatMonMod57	A57.J1:24	6.1
					I_SldO1VacPrSe	A56.J1:13	20.1
					I_SldO2CloseSw	A57.J1:10	20.1
					I_SldO2LimiOutSw	A57.J1:14	20.1
					I_SldO2LimitInSe	A57.J1:11	20.1
					I_SldO2OpenSw	A57.J1:9	20.1
					I_SldO2PBrakeSw	A57.J1:12	20.1
A57.J1:3	O_SldO2RemoteLed	Slide_Out 2 Remote Led	20.1	SwSo2:2	I_BatMonMod57	A57.J1:24	6.1
					I_SldO1VacPrSe	A56.J1:13	20.1
					I_SldO2CloseSw	A57.J1:10	20.1
					I_SldO2LimiOutSw	A57.J1:14	20.1
					I_SldO2LimitInSe	A57.J1:11	20.1
					I_SldO2OpenSw	A57.J1:9	20.1
					I_SldO2PBrakeSw	A57.J1:12	20.1

MULTIPLEX OUTPUT LIST

O_xx... = Physical Ouput Pin ; I_xx... = Physical Input Pin ; D_xx... = CAN Network Signal from the HVAC control Head ; B_xx.. = Multiplex system global Network Variable

Module.Pin#	Signal name	Description	Page	Connected devices	Input involved		
A57.J1:3	O_SldO2RemoteLed	Slide_Out 2 Remote Led	20.1	SwSo2:2	I_SldO2Supply5v	A57.J1:15	20.1
A57.J1:4	O_SldO2SealInfSo	Slide_Out 2 Seal Inflating Valve	20.1		I_SldO2CloseSw	A57.J1:10	20.1
					I_SldO2LimiOutSw	A57.J1:14	20.1
					I_SldO2LimitInSe	A57.J1:11	20.1
					I_SldO2OpenSw	A57.J1:9	20.1
A57.J1:5	O_SldO2SealDefSo	Slide_Out 2 Seal Deflating Valve	20.1	SoSo3:1	I_BatMonMod57	A57.J1:24	6.1
					I_SldO2CloseSw	A57.J1:10	20.1
					I_SldO2LimiOutSw	A57.J1:14	20.1
					I_SldO2LimitInSe	A57.J1:11	20.1
					I_SldO2OpenSw	A57.J1:9	20.1
					I_SldO2PBrakeSw	A57.J1:12	20.1
A57.J1:7	O_SldO2Motneg	Slide_Out 2 Motor -	20.1	RSo4.B:1	I_BatMonMod57	A57.J1:24	6.1
					I_SldO1VacPrSe	A56.J1:13	20.1
					I_SldO2CloseSw	A57.J1:10	20.1
					I_SldO2LimiOutSw	A57.J1:14	20.1
					I_SldO2LimitInSe	A57.J1:11	20.1
					I_SldO2OpenSw	A57.J1:9	20.1
					I_SldO2PBrakeSw	A57.J1:12	20.1
A58.J1:1	O_SldO3MoSpeedA		20.2		I_BatMonMod58	A58.J1:24	6.1
					I_SldO1VacPrSe	A56.J1:13	20.1
					I_SldO3CloseSw	A58.J1:10	20.2
					I_SldO3LimiOutSw	A58.J1:14	20.2
					I_SldO3LimitInSe	A58.J1:11	20.2
					I_SldO3OpenSw	A58.J1:9	20.2
					I_SldO3PBrakeSw	A58.J1:12	20.2
A58.J1:2	O_SldO3MoSpeedB		20.2		I_BatMonMod58	A58.J1:24	6.1
					I_SldO1VacPrSe	A56.J1:13	20.1
					I_SldO3CloseSw	A58.J1:10	20.2
					I_SldO3LimiOutSw	A58.J1:14	20.2
					I_SldO3LimitInSe	A58.J1:11	20.2
					I_SldO3OpenSw	A58.J1:9	20.2
					I_SldO3PBrakeSw	A58.J1:12	20.2
A58.J1:20	O_SldO3Motpos		20.2	RSo5.B:1	I_BatMonMod58	A58.J1:24	6.1
					I_SldO1VacPrSe	A56.J1:13	20.1
					I_SldO3CloseSw	A58.J1:10	20.2
					I_SldO3LimiOutSw	A58.J1:14	20.2
					I_SldO3LimitInSe	A58.J1:11	20.2
					I_SldO3OpenSw	A58.J1:9	20.2
					I_SldO3PBrakeSw	A58.J1:12	20.2
A58.J1:3	O_SldO3RemoteLed		20.2	SwSo3:2	I_BatMonMod58	A58.J1:24	6.1
					I_SldO1VacPrSe	A56.J1:13	20.1
					I_SldO3CloseSw	A58.J1:10	20.2
					I_SldO3LimiOutSw	A58.J1:14	20.2

MULTIPLEX OUTPUT LIST

O_xx... = Physical Ouput Pin ; I_xx... = Physical Input Pin ; D_xx... = CAN Network Signal from the HVAC control Head ; B_xx.. = Multiplex system global Network Variable

Module.Pin#	Signal name	Description	Page	Connected devices	Input involved		
A58.J1:3	O_SldO3RemoteLed		20.2	SwSo3:2	I_SldO3LimitInSe	A58.J1:11	20.2
					I_SldO3OpenSw	A58.J1:9	20.2
					I_SldO3PBrakeSw	A58.J1:12	20.2
					I_SldO3Supply5v	A58.J1:15	20.2
A58.J1:4	O_SldO3SealInfSo		20.2		I_SldO3CloseSw	A58.J1:10	20.2
					I_SldO3LimiOutSw	A58.J1:14	20.2
					I_SldO3LimitInSe	A58.J1:11	20.2
					I_SldO3OpenSw	A58.J1:9	20.2
A58.J1:5	O_SldO3SealDefSo		20.2		I_BatMonMod58	A58.J1:24	6.1
					I_SldO3CloseSw	A58.J1:10	20.2
					I_SldO3LimiOutSw	A58.J1:14	20.2
					I_SldO3LimitInSe	A58.J1:11	20.2
					I_SldO3OpenSw	A58.J1:9	20.2
					I_SldO3PBrakeSw	A58.J1:12	20.2
A58.J1:7	O_SldO3Motneg		20.2	RSo6.B:1	I_BatMonMod58	A58.J1:24	6.1
					I_SldO1VacPrSe	A56.J1:13	20.1
					I_SldO3CloseSw	A58.J1:10	20.2
					I_SldO3LimiOutSw	A58.J1:14	20.2
					I_SldO3LimitInSe	A58.J1:11	20.2
					I_SldO3OpenSw	A58.J1:9	20.2
					I_SldO3PBrakeSw	A58.J1:12	20.2

MULTIPLEX INTPUT LIST

O_xx... = Physical Ouput Pin ; I_xx... = Physical Input Pin ; D_xx... = CAN Network Signal from the HVAC control Head ; B_xx.. = Multiplex system global Network Variable

Module.Pin#	Signal name	Description	Page	Connected devices
.	I_LwWipSpd2Sw			
A36.JB:11	I_InputTest		9.1	Sw13:3
A36.JB:13	I_BrkLtSeFrSig	Brake Lights Sensor	12.1	
A36.JB:14	I_EngFanSw	Radiator Fan Switch		
A36.JB:2	I_IgnKeySw	Ignition Key switch	3.2	
A36.JB:21	I_RrCutOutSw	Rear Junction Box CutOut Switch	3.2	
A36.JB:22	I_FrEngStaSw	Front Engine Start Switch	3.2	
A36.JB:23	I_FireExt1stAl			
A36.JB:4	I_HazardSw	Hazard Switch	26.1	Sw4:3
A36.JB:5	I_WakeUp	Wake up signal (Fire alarm, horn, keyless module)	9.1	A41.J1:16
A36.JB:6	I_AccKeySw	Accessories Key switch	3.2	
A36.JB:9	I_ParkBrSe	Paking Brake Sensor	12.1	
A41.J1:10	I_FireSensorA36	Fire Sensor On A36	9.1	
A41.J1:17	I_LugDorLkSw	Luggage Door Lock Switch	33.1	
A41.J1:18	I_KeylessLuggUnl	Keyless luggages doors unlock signal	29.1	A31.B:11
A41.J1:19	I_KeylessLockAll	Keyless lock all doors signal	29.1	A31.B:22
A41.J1:2	I_DrvLtSw	Driver Light Switch	19.1	Sw24:3
A41.J1:20	I_LugDorULkSw	Luggage Door Unlock Switch	33.1	
A41.J1:21	I_KeylessEntReq		29.1	A31.B:10
A41.J1:3	I_HornSw	Horn Switch	9.1	
A41.J1:4	I_KeylessDrUnl	Keyless door unlock signal	29.1	A31.A:1
A41.J1:5	I_EntDorOpSe	Entrance Door Open Sensor	29.1	D73:A
A41.J1:6	I_KeylessPanic	Keyless panic button signal	29.1	A31.B:8
A41.J1:7	I_KeylessIntru	Keyless intrusion signal	29.1	A31.B:9
A41.J1:8	I_EntDrUnlockSw	Entrance door unlock switch	29.1	
A41.J1:9	I_EntDorLockSw	VIP Entrance Door Lock Switch	29.1	Sw104:6
A42.J1:18	I_EngBrOnSe	Engine Brake ACTIVE Sensor		
A42.J1:5	I_EtherSw	Ether Switch	13.1	Sw23:3
A42.J1:7	I_LevelLowSw	Level low switch	32.1	
A42.J1:8	I_LwWipIntSw	Lower Wiper Intermitant Switch	34.1	Sw1.C258:7
A42.J1:9	I_StopEngSe	Stop Engine Sensor		
A43.J1:20	I_BlinkSw	Courtesy Blink Switch	26.1	Sw1.C258:5
A43.J1:3	I_HiBeamCallSw	Hi/Low Beam Switch	26.1	Sw1.C259:4
A43.J1:4	I_HdLtPos1Sw	Head Light Switch Position Markers	26.1	
A43.J1:6	I_RevAlrmSw	Reverse alarm switch	26.3	
A43.J1:7	I_HornSelectSw	Horn Select switch	9.1	Sw63A:3
A43.J1:8	I_HdLtHiLowBmSw	Head Lights High and Low Beam Switch	26.1	Sw1.C258:8
A44.J1:10	I_FireExt2ndAlm			
A45.J1:12	I_HdLtPos2SwLH	Head Light Switch Beam Position 2 LH	26.1	
A45.J1:9	I_LHFlshSw	Left Hand Flasher Switch	26.1	
A46.J1:24	I_BatMonMod46		6.1	A46.J1:26
A46.J1:9	I_LwWshSw	Lower Wiper Washer Switch	34.1	Sw1.C258:6
A47.J1:10	I_DefrostHighSw	Passenger defrost speed increase switch	18.1	Sw122:3

MULTIPLEX INTPUT LIST

O_xx... = Physical Ouput Pin ; I_xx... = Physical Input Pin ; D_xx... = CAN Network Signal from the HVAC control Head ; B_xx.. = Multiplex system global Network Variable

Module.Pin#	Signal name	Description	Page	Connected devices
A47.J1:11	I_CoilTherSe	Coil sensing thermostat	18.3	Se52.A:1
A47.J1:12	I_DefrostLowSw	Passenger defrost speed decrease switch	18.1	Sw122:4
A47.J1:14	I_FrontOutTemp	Front outside temperature sensor	18.3	Se50:B
A47.J1:24	I_BatMonMod47		6.1	A47.J1:27
A48.J1:10	I_HdLtPos2SwRH	Head Light Switch Beam Position 2 RH	26.1	
A48.J1:12	I_RHFlshSw	Right Hand Flasher Switch	26.1	
A48.J1:9	I_EntDrUnSw	Entrance door unlock switch	29.1	D56:A, D56:B
A49.J1:3	I_AcDorOpSe	Condensor Door Open Switch	25.1	
A49.J1:5	I_LuggDrUnSe	Luggages doors unlock sensor	24.1	Sw118:2
A49.J1:9	I_Alt2Voltage		3.2	
A50.J1:11	I_NeutralSe	Neutral Signal Sensor	15.1	A1Gen4.A:41
A50.J1:12	I_RetdrSig	Retarder Signal	15.1	A1Gen4.A:24
A51.J1:10	I_BrkLtSeRrSig	Brake Lights Sensor	12.1	
A51.J1:12	I_RHFlshSwRrSig	RH FlasherSwitch Rear Signal	26.2	
A51.J1:9	I_LHFlshSwRrSig	LH FlasherSwitch Rear Signal	26.2	
A52.J1:10	I_EngFanSpd2	Engine Fan Signal Speed 2	13.1	A73.J2:9
A52.J1:11	I_EngCmptLtSw	Engine Compartiment Light Switch	25.1	Sw84.B:1
A52.J1:12	I_EngDoorSe	Engine Door Sensor	25.1	
A52.J1:13	I_AcPresHiSSe	Ac Pressure High Side Sensor	18.2	Se23:C
A52.J1:14	I_AcPresLoSSe	Ac Pressure Low Side Sensor	18.2	Se24:C
A52.J1:9	I_EngFanSpd1	Engine Fan Signal Speed 1	13.1	A73.J2:10
A53.J1:10	I_RrStrtEnSw	Rear Start Enable Switch	3.2	
A53.J1:11	I_EngStaRrSw	Engine Start Rear Switch	3.2	Sw59:2
A53.J1:12	I_StartLockOut			
A53.J1:24	I_BatMonMod53		6.1	A53.J1:26
A53.J1:9	I_FrStrtEnSw	Front Start Enable Switch	3.2	Sw58:3
A54.J1:14	I_OutDoorTempSe	Outside Temperature Sensor	18.1	Se20:B
A54.J1:24	I_BatMonMod54		6.1	A54.J1:29
A55.J1:1	I_DrvTempSe	Driver Temperature sensor	18.1	Se21:2
A55.J1:10	I_RetarderSel	Retarder Selected	12.1	Sw16:3
A55.J1:17	I_BackUpCamSw	Back up camera switch	28.1	Sw119:3
A55.J1:18	I_HeadLmpWshSw		34.1	Sw6:4
A55.J1:19	I_UpWshSw	Upper Washer Wiper Switch	34.1	Sw6:3
A55.J1:2	I_VIPSteerWh5V		38.1	
A55.J1:20	I_UpWipIntSw	Upper Wiper Intermitant Switch	34.1	
A55.J1:21	I_UpWipSw	Upper Wiper Switch	34.1	Sw5:6
A55.J1:3	I_VIPSteerWh1		38.1	A20.A:1
A55.J1:4	I_VIPSteerWh2		38.1	A20.A:2
A55.J1:6	I_FogLightSw	Fog Lights Switch	26.3	Sw3:3
A55.J1:7	I_CorneringLtSw	Cornering Light Switch	26.3	Sw99:3
A55.J1:8	I_DockingLtSw	Docking Lights Switch	26.3	Sw99:1
A55.J1:9	I_LowDockLtsSw	Low docking lights switch	26.3	Sw102:3
A56.J1:10	I_SldO1CloseSw	Slide-Out 1 Close Sw	20.1	SwSo1.A:4

MULTIPLEX INTPUT LIST

O_xx... = Physical Ouput Pin ; I_xx... = Physical Input Pin ; D_xx... = CAN Network Signal from the HVAC control Head ; B_xx.. = Multiplex system global Network Variable

Module.Pin#	Signal name	Description	Page	Connected devices
A56.J1:11	I_SldO1LimitInSe	Slide-Out 1 Limit In Detection Sw	20.1	SESO2:2
A56.J1:12	I_SldO1PBrakeSw	Slide-Out 1 Parking Brake Sw	20.1	
A56.J1:13	I_SldO1VacPrSe	Slide-Out 1 Vaccum Pressure Transducer	20.1	SESO1:C
A56.J1:14	I_SldO1LimiOutSw	Slide-Out 1 Limit Out Detection Sw	20.1	SESO3:2
A56.J1:15	I_SldO1Supply5v	Slide Out 1 5v Supply	20.1	
A56.J1:24	I_BatMonMod56		6.1	A56.J1:27
A56.J1:9	I_SldO1OpenSw	Slide-Out 1 Open Sw	20.1	SwSo1.A:5
A57.J1:10	I_SldO2CloseSw	Slide-Out 2 Close Sw	20.1	SwSo2:4
A57.J1:11	I_SldO2LimitInSe	Slide-Out 2 Limit In Detection Sw	20.1	SESO5:2
A57.J1:12	I_SldO2PBrakeSw	Slide-Out 2 Parking Brake Sw	20.1	
A57.J1:14	I_SldO2LimiOutSw	Slide-Out 2 Limit Out Detection Sw	20.1	SESO6:2
A57.J1:15	I_SldO2Supply5v	Slide Out 2 5v Supply	20.1	
A57.J1:24	I_BatMonMod57		6.1	A57.J1:29
A57.J1:9	I_SldO2OpenSw	Slide-Out 2 Open Sw	20.1	SwSo2:5
A58.J1:10	I_SldO3CloseSw		20.2	SwSo3:4
A58.J1:11	I_SldO3LimitInSe		20.2	SeSo7:2
A58.J1:12	I_SldO3PBrakeSw		20.2	
A58.J1:14	I_SldO3LimiOutSw		20.2	SeSo8:2
A58.J1:15	I_SldO3Supply5v	Slide Out 3 Power Supply	20.2	
A58.J1:24	I_BatMonMod58		6.1	A58.J1:26
A58.J1:9	I_SldO3OpenSw		20.2	SwSo3:5

MULTIPLEX ERROR MESSAGES LIST

FMI 3 = Shorted High ; FMI 4 = Shorted Low ; FMI 5 = Open Circuit ; FMI 6 = Current above Normal

Cluster message	SID/PSID	FMI	Module.Pin#	Page	Cluster message	SID/PSID	FMI	Module.Pin#	Page
A/C Clutch SO9	PSID #4	3, 4, 5, 6	A52.J1:20	18.2	Flash RH SW1	PSID #133	3, 4	A48.J1:12	26.1
A/C Pres HiSd SE23	PSID #28	3, 4	A52.J1:13	18.2	Flasher LH Sw1	PSID #130	3, 4	A45.J1:9	26.1
A/C Pres LoSd SE24	PSID #29	3, 4	A52.J1:14	18.2	Flsh Audibl Rly R16	PSID #37	3, 4, 5, 6	A45.J1:8	26.1
Aux AC fan Mo51	SID #39	3, 4, 6	A46.J1:1	18.3	Fog's Lights LH L95	PSID #134	3, 4, 6	A45.J1:4	26.3
Aux Refr sol So38	SID #46	3, 4, 6	A46.J1:8	18.3	Fog's lights RH L96	PSID #136	3, 4, 6	A48.J1:8	26.3
Backup Light & Alm	PSID #167	3, 4, 6	A50.J1:20	26.3	Foot trap Mo4	PSID #14	3, 4, 6	A45.J1:2	18.1
Blinker SW1	PSID #139	3, 4	A43.J1:20	26.1	FR Clearance lights	PSID #137	3, 4, 6	A44.J1:8	26.1
Brk Lts Sens SE19	PSID #119	3, 4	A36.JB:13	12.1	Fr Flsh-Mkr LH L62	PSID #128	3, 4, 6	A45.J1:3	26.1
Center Flash LH L70	PSID #124	3, 4, 6	A50.J1:5	26.2	Fr Side Flsh RH L64	PSID #10	3, 4, 6	A48.J1:20	26.1
Center Flash RH L68	PSID #125	3, 4, 6	A50.J1:7	26.2	Fr Start SW83	PSID #58	3, 4	A36.JB:22	3.2
Center Mkr L67-L70	PSID #27	3, 4, 6	A50.J1:8	26.2	Front Flash RH L61	PSID #126	3, 4, 6	A48.J1:6	26.1
Cond Rly spd1 R10	PSID #41	3, 4, 5, 6	A54.J1:5	18.2	FrontMkr Lts LH L62	PSID #148	3, 4, 6	A45.J1:21	26.1
Cond Rly spd2 R9	PSID #42	3, 4, 5, 6	A54.J1:1	18.2	FrontMkr Lts RH L61	PSID #149	3, 4, 6	A48.J1:7	26.1
Condensor Door Sw7	PSID #7	3, 4	A49.J1:3	25.1	FrStart Enable SW58	PSID #56	3, 4	A53.J1:9	3.2
Cornering Dash Sw30	PSID #200	3, 4	A55.J1:7	26.3	Hazard Switch Sw4	PSID #138	3, 4	A36.JB:4	26.1
Cyclope Lt L81	PSID #116	3, 4, 6	A51.J1:7	26.2	Hd Light Call SW1	PSID #140	3, 4	A43.J1:3	26.1
Defr water Pmp Mo50	SID #41	3, 4	A47.J1:20	18.3	HdLamp Wsh Pmp Mo54	SID #48	3, 4, 6	A46.J1:21	34.1
Diff Lock sol So35	SID #36	3, 4, 6	A52.J1:4	37.1	Head Lights Pos1SW2	PSID #143	3, 4	A43.J1:4	26.1
Docking Dash Sw31	PSID #3	3, 4	A55.J1:8	26.3	Head Lt Sw Pos2 Sw2	PSID #11	3, 4	A45.J1:12	26.1
Driver Def Fan L198	PSID #180	3, 4, 5, 6	A47.J1:1	18.1	Hi Low Beam Sw1	PSID #6	3, 4	A43.J1:8	26.1
Driver heat Sol SO8	PSID #16	3, 4, 5, 6	A46.J1:6	18.1	High Beam LH L60	PSID #141	3, 4, 5, 6	A45.J1:6	26.1
Driver Light L16	PSID #104	3, 4, 5, 6	A47.J1:6	19.1	High Beam RH L59	PSID #145	3, 4, 5, 6	A48.J1:3	26.1
Driver Light SW24	PSID #105	3, 4	A41.J1:2	19.1	LH Corner Lts L97	PSID #120	3, 4, 5, 6	A45.J1:5	26.3
Driver Rfg Sol SO7	PSID #13	3, 4, 5, 6	A46.J1:5	18.1	LH Docking LightL93	PSID #122	3, 4, 5, 6	A51.J1:4	26.3
Driver Sensor SE21	PSID #12	3, 4, 5	A55.J1:1	18.1	Low Beam LH L60	PSID #142	3, 4, 6	A45.J1:7	26.1
Drv air Trap MO3	PSID #5	3, 4, 6	A44.J1:2	18.1	Low Beam RH L59	PSID #146	3, 4, 6	A48.J1:4	26.1
Drv Rec Cylind L203	PSID #30	3, 4, 5, 6	A47.J1:2	18.1	Low Wip Spd1 Mo22	PSID #184	3, 4, 5, 6	A47.J1:3	34.1
Elec Horn L185 L186	PSID #83	3, 4, 6	A43.J1:13	9.1	Lower Stop Lamps	PSID #153	3, 4, 6	A50.J1:6	26.2
Elec.Horn SW61 SW62	PSID #82	4	A41.J1:3	9.1	Lower Washer pmp	PSID #181	4, 6	A46.J1:3	34.1
Emergency Relay R21	PSID #44	3, 4, 5, 6	A36.JA:24	3.2	Lower Washer SW1	PSID #188	3, 4	A46.J1:9	34.1
Eng Brk Active Sig	PSID #45	3, 4	A42.J1:18		Lower Wip Int SW1	PSID #183	3, 4	A42.J1:8	34.1
Eng Cmpt Bulb L173	PSID #106	3, 4, 5, 6	A52.J1:5	25.1	Lugg doors lock R30	SID #44	3, 4, 5, 6	A36.JA:7	33.1
Eng Cmpt Sw	PSID #107	3, 4	A52.J1:11	25.1	Lugg doors unl R32	SID #45	3, 4, 5, 6	A36.JA:6	33.1
Eng Ether SW23	PSID #50	3, 4	A42.J1:5	13.1	OutDoor Sens SE20	PSID #161	3, 4, 5	A54.J1:14	18.1
Eng Fan Dash SW22	PSID #55	3, 4	A36.JB:14		Park brak Sens Se18	PSID #162	3, 4	A36.JB:9	12.1
Eng Fan Spd1 Req	PSID #51	3, 4	A52.J1:9	13.1	Pass def fan Mo25	SID #38	3, 4, 5, 6	A47.J1:7	18.1
Eng Fan Spd2 Req	PSID #52	3, 4	A52.J1:10	13.1	Pass Heat Sol SO13	PSID #24	3, 4, 6	A54.J1:8	18.2
Eng. Ether Sol SO1	PSID #49	3, 4, 6	A52.J1:6	13.1	Pass Rfg Sol SO11	PSID #23	3, 4, 5, 6	A54.J1:3	18.2
Engine Fan Spd1 MO2	PSID #53	3, 4, 5, 6	A52.J1:1	13.1	Pass. Wtr pump MO12	PSID #17	4, 6	A54.J1:4	18.2
Engine Fan Spd2 MO2	PSID #54	3, 4, 5, 6	A52.J1:2	13.1	Rear CutOut Sw82	PSID #18	3, 4	A36.JB:21	3.2
Evap Motor Rly R12	PSID #77	3, 4, 5, 6	A54.J1:7	18.2	RearFlsh LH L71 L75	PSID #131	3, 4, 6	A51.J1:21	26.2
Evap Spd Ctrl MO9	PSID #78	4, 6	A54.J1:2	18.2	RearFlsh RH L73 L76	PSID #132	3, 4, 6	A51.J1:3	26.2
Fire Sensor	PSID #79	3, 4	A41.J1:10	9.1	Retarder signal	PSID #164	3, 4	A50.J1:12	15.1

MULTIPLEX ERROR MESSAGES LIST

FMI 3 = Shorted High ; FMI 4 = Shorted Low ; FMI 5 = Open Circuit ; FMI 6 = Current above Normal

Cluster message	SID/PSID	FMI	Module.Pin#	Page					
Rev lights L91 L92	SID #43	3, 4, 5, 6	A50.J1:3	26.3					
RH Corner Light L98	PSID #121	3, 4, 5, 6	A48.J1:5	26.3					
RH Docking LightL94	PSID #123	3, 4, 5, 6	A51.J1:5	26.3					
RJB fan Mo53	SID #37	3, 4, 6	A53.J1:5	11.1					
Rr Clearance lights	PSID #151	3, 4, 6	A50.J1:4	26.2					
Rr Start SW59	PSID #59	3, 4	A53.J1:11	3.2					
RrStart Enable SW58	PSID #57	3, 4	A53.J1:10	3.2					
Ser Brake Trans A1	SID #49	3, 4, 6	A51.J1:1	15.1					
SldO 5v supply	SID #23	3, 4	A56.J1:15	20.1					
SldO Close Sw	SID #18	3, 4	A56.J1:10	20.1					
SldO Limit In Se	SID #19	3, 4	A56.J1:11	20.1					
SldO Limit Out Se	SID #20	3, 4	A56.J1:14	20.1					
SldO Mot Neg Rly	SID #15	3, 4, 5, 6	A56.J1:7	20.1					
SldO Mot Pos Rly	SID #16	3, 4, 5, 6	A56.J1:20	20.1					
SldO Mot SpeedA Ctr	SID #9	3, 6	A56.J1:1	20.1					
SldO Mot SpeedB Ctr	SID #10	3, 6	A56.J1:2	20.1					
SldO Open Sw	SID #17	3, 4	A56.J1:9	20.1					
SldO Park Br Signal	SID #8	3, 4	A56.J1:12	20.1					
SldO Remote Led	SID #11	3, 4, 5, 6	A56.J1:3	20.1					
SldO Seal Def Sol	SID #13	3, 4, 5, 6	A56.J1:5	20.1					
SldO Seal Inf Sol	SID #12	3, 4, 5, 6	A56.J1:4	20.1					
SldO Secu Pin Sol	SID #21	3, 4, 5, 6	A56.J1:21	20.1					
SldO Vacc Gen Sol	SID #14	3, 4, 5, 6	A56.J1:6	20.1					
SldO Vacuum Sensor	SID #5	3, 4	A56.J1:13	20.1					
Starter Relay SO2	PSID #60	4, 6	A53.J1:6	3.2					
Starter Relay SO2	PSID #60	3, 6	A53.J1:1	3.2					
Stop Eng Signal In	PSID #62	3	A42.J1:9						
SunVisor RlyR41-R45	SID #54	3, 4, 5, 6	A55.J1:13	38.1					
Tail Lights	PSID #152	3, 4, 6	A51.J1:8	26.2					
Trans Neutral Sens	PSID #168	3, 4	A50.J1:11	15.1					
Under Floor lights	PSID #112	4, 6	A46.J1:20	25.1					
Unloader LH L200	PSID #31	3, 4, 6	A52.J1:8	18.2					
Unloader RH L199	PSID #32	3, 4, 6	A52.J1:21	18.2					
Upper Brk Lamp	PSID #43	3, 4, 6	A51.J1:6	26.2					
Upper Wash Pmp MO18	PSID #189	4, 6	A46.J1:4	34.1					
Upper Wash SW6	PSID #190	3, 4	A55.J1:19	34.1					
Upper Wiper Int SW5	PSID #191	3, 4	A55.J1:20	34.1					
Upper Wiper SW5	PSID #192	3, 4	A55.J1:21	34.1					
UpperWiper Mot MO21	PSID #193	3, 4, 6	A46.J1:2	34.1					

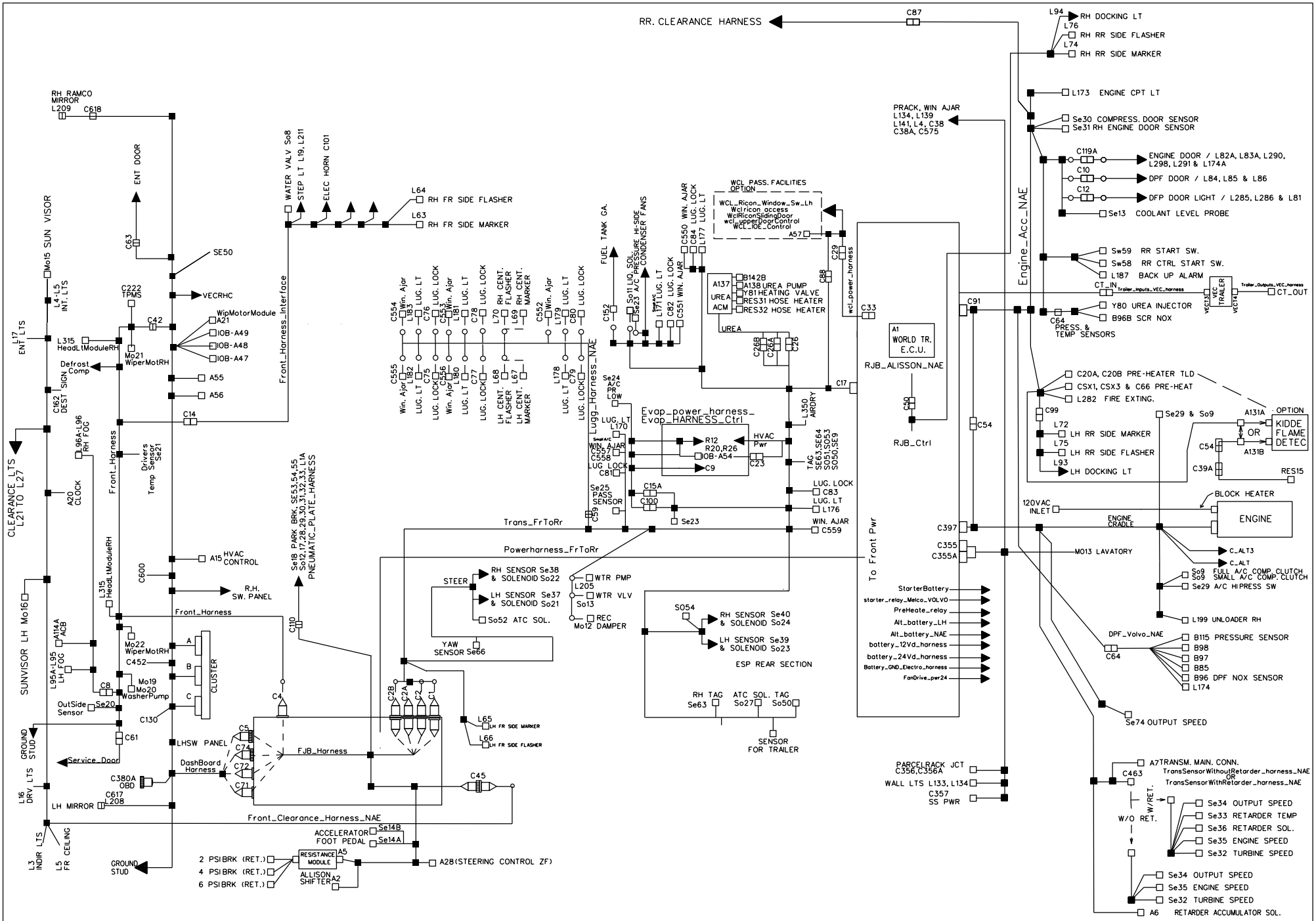

PREVOST	WIRING DIAGRAM	NO: D062140	PAGE: C	REVISION 0

DESCRIPTION	P9660
CHANGE ORDER	2018032
EFFECTIVE VEHICLE	R-1453
wiring revision	0
ACB_Gen2	0610245
Adaptor Phantom Feed - Radio Antenna	22480495
Adaptor Fakra to Motorola - Radio Antenna	901727
Antenna cable - AM/FM/DBA	901728
ailse_light_extension	idemX3_069424
AFSS Eberspasher Harness	0600144
AFSS ProHeat Harness	0600089
AirHorn_harness	idemX3_0610004
Aisle_lights_harness	0600110
Alt_battery_LH	060682
Alt_battery_LH_REMY	0610053
Alt_battery	060684
Alt_battery_REMY	0610052
Alt_chassis_GND	idemX3_060264
Alt_chassis_GND_REMY	0610034
Alt_Jumper_Power	idemX3_060265
Alt_LH_chassis_GND	idemX3_069504
Alt_LH_chassis_GND_REMY	0610035
Alternator_Ctrl_RH_harness_BOSCH	0600111
Alternator_Ctrl_RH_harness_REMY	0600113
Alternator_Ctrl_LH_harness_BOSCH	0600112
Alternator_Ctrl_LH_harness_REMY	0600114
Batt_charger_120V_inlet	0600155
Batt_charger_120V_Xantrex	0600133
battery_12Vd_harness	060686
battery_24Vd_harness	060691
Battery__Cable	062371
Battery_GND_Electro_harness	060693
Battery_Gnd_Harness	063592_microstation
Beru_antenna	idemX3_0610143
Beru_Fjb	idemX3_0610142
Brigade to infotainment harness	0610604
Bumper_Harness_Acb	0600026
Bumper_Harness_Acb_Fog	0600025
Cable adapteur 120v Pour conducteur	0600090
Comp_Bitzer	idemMth_061482
Comp_Bock	IDEM VIP0610550
Destination_Sign_Emergency_Sw124	IdemX3_069944
Destination_Sign_Front_To_Side	IdemX3_069941
Destination_Sign_Interconn_Side_Rear	IdemX3_069942
Destination_Sign_Interconnection	IdemX3_069940
Destination_Sign_Rear	IdemX3_069943

DESCRIPTION	P9660
CHANGE ORDER	2018032
EFFECTIVE VEHICLE	R-1453
wiring revision	0
booster_positive_Harness	060692
Cablage__ASM	061180_JPEG
Dash	0600007
Docking Cornering Sw.	0610012 / 066613 (SAV)
Entrance_Door_Harness	0600013
SCR Cmpt Clearance lights Harness	0600031
DPF_Door_light	0600046
DPF_Volvo	060746
Driver_120VAC_Outlet	Idem X3_0610152
electric_horn	0600018
Electronic Mirrors Harness	0610486
Eng_Cradle_Allisson	0600115
Eng_Cradle_Ishift	0600121
Engine_Acc	0600120
Engine_chassis_GND	IdemX3_060306
ENGINE_DOOR	060748
Engine_Block_Heater_Harness	Idem X3_0610126
equilizer_harness_Vanner	060855
Evap_HARNESS_Ctrl	060804
Evap_Power_GND_harness	idemX3_060527
Evap_power_harness_	IdemX3_060529
FanDrive_harness	IdemX3_068820
FanDrive_pwr24	idemX3_069245
FanDrive_pwrGnd	idemX3_069246
FJB	0600000
AFSS Pro-Heat interface	0600089
FJB_TransAlisson	0600003
FJB_TransIShift	0600021
Flame_Detector_Ext_Harness	061046
Front_Clearance_Harness	0600011
Front_flip_screen	IdemX3_060099
Front_Harness	0600001
Front_Harness_Interface	0600123
Fuel_gauge_harness	idemX3_060087
Indiv_Headset_Radios_PWR	401420
Inter_Batt_cable	061036
Interior_Light_access	0600009
INVerter_120Vac_LH (Option 1 inverter)	0600150
INVerter_120Vac_LH (Option 2 inverter)	0600147
INVerter_120Vac_RH	0600096
24V_Inverter_harness	0600137
InverterJonctionNegatif	060819

DESCRIPTION	P9660
CHANGE ORDER	2018032
EFFECTIVE VEHICLE	R-1453
wiring revision	0
InverterJonctionNegatif2	061149
InverterJonctionPositif	060019
ISM_RELAY_Prack	0610200
JUMPER_120VAC_WCL	068937
Jumper_Y_120Vac	068221
Lavatory	060833
Led Pied conducteur	0600078
LH_CONSOLE	Cancel
LH_Console Alisson	0600003
LH_Console I_Shift	0600021
ENGINE_LINEAR_THERMAL_Harness	0610154
Linear_thermal_WO_afss	idemH3_069175
Lugg_Harness_H341	0610010
Lugg_Harness_H345	0600051
Outlet_120vac_PRack X3_Seul	0600131
ParcelRackJB	0600029
Plug_for_2_sliding_seats	067984
Plug_for_3_sliding_seats	068321
Pneumatic_Plate_harness	0600020
Power_harness_ 45pi	0600014
Power_harness_ 41pi	0600017
Power_RH_Splitter_harness	060654
Power_Steering_Ctrl	0600015
PowerVecr	060870
PreHeate_relay	060872
PreHeater_GND	idemX3_060308
Preheater_Thermal_harness	idemX3_067676
Preheater_ON_W_Batt_Charger	idemX3_060092
Preheater_ON_W_HVAC	idemX3_060093
ProHeat_Interface	idemX3_060228
ProHeat_Timer_Harness	060016
Proheat_To_RJB_harness	0610115
RadiatorChassisGnd	idemX3_069279
Radiator door harness	061153
Reading_Light_RH_Standard	0600041
Reading_Light_LH_Standard	0600040
Rear_wheel_sub_harness	0610473
Relay_Melco_batt	idemX3_069542
Resistor for speakers impedence matching	0600088
RHC_PowerHarness	0600006
RJB_ALISSON	0600023
RJB_Ctrl	0600085

DESCRIPTION	P9660
CHANGE ORDER	2018032
EFFECTIVE VEHICLE	R-1453
wiring revision	0
RJB_ISHIFT	0600024
Rear_clearence_harness	0600030
RH modesty panel AV	0610605
Roof_Haches_W_Fan	0600108
Service_Door_Harness	0600012
Sound_System_AuxHarness	062817
Sound_System_Harness	062799
Sound_System_Prack_Harness	063106
Sound_system_pwr_harness	0600083
SpherosTimerHarness	0600089
Starter_chassis_GND	idemX3_060307
starter_relay_Melco_VOLVO	060711
StarterBattery	060712
SubWofferExtHarness	idemH3_066743
TPMS_antennas	0600008
Trailer_Inputs_VEC_harness	060722
Trailer_Outputs_VEC_harness	060723
Trans_Fr_to_Rr_H345	0600010
TransSensorWithoutRetarder_harness	IDEMX3_0610588
TransSensorWithRetarder_harness	IDEMX3_0610586
Stairs_UpperSection_Harness	0600032
Stairs_LowerSection_Harness	0600033
Urea_Harness	0610590
USB_5V_Harness	IdemX3_060660
USB_Ipod_harness	idemX3_901349
Wall_LedStrip_Ext_WCL	0600044
WCL_IOE_Control	0600117
wcl_power_harness	060728
Wcl Ricon Access	IdemCOM069744
Wcl ricon lighting	061248
WCL_RICON_Lighting_Jumper	069065
WCL_Ricon_Window_Sw_Lh	0600048
WCL_Ricon_Window_Sw_RH	0600050
wcl_upperDoorControl	0600080
WclRiconSlidingDoor	069992
wifi_system_gnd	idemX3_069925
Win_Ajar_FJB	idemX3_060574
Win_ajar_window_side_LH	see 0600083
Win_ajar_window_side_RH	see 0600084
Win_ajar_window_Ricon_RH	060757
Windshield_Washer_Harness	0600019
Wind Ajar, Curb Lights and câblage système de son LH	0600083
Wind Ajar, Curb Lights RH	0600084

DESCRIPTION	P9660	P9660
CHANGE ORDER	2018032	2022123
EFFECTIVE VEHICLE	R-1453	
wiring revision	0	6
ACB_Gen2	0610245	
Adaptor Phantom Feed - Radio Antenna	22480495	
Adaptor Fakra to Motorola - Radio Antenna	901727	
Antenna cable - AM/FM/DBA	901728	
ailse_light_extension	idemX3_069424	
AFSS Eberspasher Harness	0600144	
AFSS ProHeat Harness	0600089	
AirHorn_harness	idemX3_0610004	
Aisle_lights_harness	0600110	
Alt_battery_LH	060682	
Alt_battery_LH_REMY	0610053	
Alt_battery	060684	
Alt_battery_REMY	0610052	
Alt_chassis_GND	idemX3_060264	
Alt_chassis_GND_REMY	0610034	
Alt_Jumper_Power	idemX3_060265	
Alt_LH_chassis_GND	idemX3_069504	
Alt_LH_chassis_GND_REMY	0610035	
Alternator_Ctrl_RH_harness_BOSCH	0600111	
Alternator_Ctrl_RH_harness_REMY	0600113	
Alternator_Ctrl_LH_harness_BOSCH	0600112	
Alternator_Ctrl_LH_harness_REMY	0600114	
Batt_charger_120V_inlet	0600155	
Batt_charger_120V_Xantrex	0600133	
battery_12Vd_harness	060686	
battery_24Vd_harness	060691	
Battery__Cable	062371	
Battery_GND_Electro_harness	060693	
Battery_Gnd_Harness	063592_microstation	
Beru_antenna	idemX3_0610143	
Beru_Fjb	idemX3_0610142	
Brigade to infotainment harness	0610604	
Bumper_Harness_Acb	0600026	
Bumper_Harness_Acb_Fog	0600025	
Cable adapteur 120v Pour conducteur	0600090	
Comp_Bitzer	idemMth_061482	
Comp_Bock	IDEM VIP0610550	
Destination_Sign_Emergency_Sw124	IdemX3_069944	
Destination_Sign_Front_To_Side	IdemX3_069941	
Destination_Sign_Interconn_Side_Rear	IdemX3_069942	
Destination_Sign_Interconnection	IdemX3_069940	
Destination_Sign_Rear	IdemX3_069943	

DESCRIPTION	P9660	P9660
CHANGE ORDER	2018032	2022123
EFFECTIVE VEHICLE	R-1453	
wiring revision	0	6
booster_positive_Harness	060692	
Cablage__ASM	061180_JPEG	
Dash	0600007	
Docking Cornering Sw.	0610012 / 066613 (SAV)	
Entrance_Door_Harness	0600013	
SCR Cmpt Clearance lights Harness	0600031	
DPF_Door_light	0600046	
DPF_Volvo	060746	
Driver_120VAC_Outlet	Idem X3_0610152	
electric_horn	0600018	
Electronic Mirrors Harness	0610486	
Eng_Cradle_Allisson	0600115	
Eng_Cradle_Ishift	0600121	
Engine_Acc	0600120	
Engine_chassis_GND	IdemX3_060306	
ENGINE_DOOR	060748	
Engine_Block_Heater_Harness	Idem X3_0610126	
equilizer_harness_Vanner	060855	
Evap_HARNESS_Ctrl	060804	
Evap_Power_GND_harness	idemX3_060527	
Evap_power_harness_	IdemX3_060529	
FanDrive_harness	IdemX3_068820	
FanDrive_pwr24	idemX3_069245	
FanDrive_pwrGnd	idemX3_069246	
FJB	0600000	
AFSS Pro-Heat interface	0600089	
FJB_TransAlisson	0600003	
FJB_TransIShift	0600021	
Flame_Detector_Ext_Harness	061046	
Front_Clearance_Harness	0600011	
Front_flip_screen	IdemX3_060099	
Front_Harness	0600001	
Front_Harness_Interface	0600123	
Fuel_gauge_harness	idemX3_060087	
Indiv_Headset_Radios_PWR	401420	
Inter_Batt_cable	061036	
Interior_Light_access	0600009	
INVerter_120Vac_LH (Option 1 inverter)	0600150	
INVerter_120Vac_LH (Option 2 inverter)	0600147	
INVerter_120Vac_RH	0600096	
24V_Inverter_harness	0600137	
InverterJonctionNegatif	060819	

DESCRIPTION	P9660	P9660
CHANGE ORDER	2018032	2022123
EFFECTIVE VEHICLE	R-1453	
wiring revision	0	6
InverterJonctionNegatif2	061149	
InverterJonctionPositif	060019	
ISM_RELAY_Prack	0610200	
JUMPER_120VAC_WCL	068937	
Jumper_Y_120Vac	068221	
Lavatory	060833	
Led Pied conducteur	0600078	
LH_CONSOLE	Cancel	
LH_Console Alisson	0600003	
LH_Console I_Shift	0600021	
ENGINE_LINEAR_THERMAL_Harness	0610154	
Linear_thermal_WO_afss	idemH3_069175	
Lugg_Harness_H341	0610010	
Lugg_Harness_H345	0600051	
Outlet_120vac_PRack X3_Seul	0600131	
ParcelRackJB	0600029	
Plug_for_2_sliding_seats	067984	
Plug_for_3_sliding_seats	068321	
Pneumatic_Plate_harness	0600020	
Power_harness_ 45pi	0600014	
Power_harness_ 41pi	0600017	
Power_RH_Splitter_harness	060654	
Power_Steering_Ctrl	0600015	
PowerVecr	060870	
PreHeate_relay	060872	
PreHeater_GND	idemX3_060308	
Preheater_Thermal_harness	idemX3_067676	
Preheater_ON_W_Batt_Charger	idemX3_060092	
Preheater_ON_W_HVAC	idemX3_060093	
ProHeat_Interface	idemX3_060228	
ProHeat_Timer_Harness	060016	
Proheat_To_RJB_harness	0610115	
RadiatorChassisGnd	idemX3_069279	
Radiator door harness	061153	
Reading_Light_RH_Standard	0600041	
Reading_Light_LH_Standard	0600040	
Rear_wheel_sub_harness	0610473	
Relay_Melco_batt	idemX3_069542	
Resistor for speakers impedence matching	0600088	
RHC_PowerHarness	0600006	
RJB_ALISSON	0600023	0600334
RJB_Ctrl	0600085	

DESCRIPTION	P9660	P9660
CHANGE ORDER	2018032	2022123
EFFECTIVE VEHICLE	R-1453	
wiring revision	0	6
RJB_ISHIFT	0600024	
Rear_clearence_harness	0600030	
RH modesty panel AV	0610605	
Roof_Haches_W_Fan	0600108	
Service_Door_Harness	0600012	
Sound_System_AuxHarness	062817	
Sound_System_Harness	0600180	
Sound_System_Prack_Harness	063106	
Sound_system_pwr_harness	0600083	
SpherosTimerHarness	0600089	
Starter_chassis_GND	idemX3_060307	
starter_relay_Melco_VOLVO	060711	
StarterBattery	060712	
SubWofferExtHarness	idemH3_066743	
TPMS_antennas	0600008	
Trailer_Inputs_VEC_harness	060722	
Trailer_Outputs_VEC_harness	060723	
0600187	0600010	0600187
TransSensorWithoutRetarder_harness	IDEMX3_0610588	
TransSensorWithRetarder_harness	IDEMX3_0610586	
Stairs_UpperSection_Harness	0600032	
Stairs_LowerSection_Harness	0600033	
Urea_Harness	0610590	
USB_5V_Harness	IdemX3_060660	
USB_Ipod_harness	idemX3_901349	
Wall_LedStrip_Ext_WCL	0600044	
WCL_IOE_Control	0600117	
wcl_power_harness	060728	
Wcl Ricon Access	IdemCOM069744	
Wcl ricon lighting	061248	
WCL_RICON_Lighting_Jumper	069065	
WCL_Ricon_Window_Sw_Lh	0600048	
WCL_Ricon_Window_Sw_RH	0600050	
wcl_upperDoorControl	0600080	
WclRiconSlidingDoor	069992	
wifi_system_gnd	idemX3_069925	
Win_Ajar_FJB	idemX3_060574	
Win_ajar_window_side_LH	see 0600083	
Win_ajar_window_side_RH	see 0600084	
Win_ajar_window_Ricon_RH	060757	
Windshield_Washer_Harness	0600019	
Wind Ajar, Curb Lights and câblage système de son LH	0600083	
Wind Ajar, Curb Lights RH	0600084	

BREAKERS LIST

No	Location	Part #	Function	Rating	Page						
CB1	RJB	563708	24WUPFJB	90amp	3.1						
CB2	RJB	568113	12ECURJB&12VDFJB	70amp	3.1						
CB3	RJB	563708	HVACpassengers	90amp	3.1						
CB5	RJB	563708	24WUPRJB	90amp	3.1						
CB6	RJB	568113	24VDRJB&WCL	70amp	3.1						
CB8	RJB	563708	12WUPRJB	90amp	3.1						
CB9	RJB	563705	Urea	40amp	3.1						
CB10	RJB	568114	VECFPower	150amp	3.1						
CB11	RJB	568127	VSS	50amp	3.1						
CB12	RJB	563708	24VDInverter/Charger	90amp	3.1						
CB13	RJB	563708	24VDInverter/Charger	90amp	3.1						
CB14	FJB_VECF	564464	WiperSystem	20amp	4.3						
CB15	FJB_VECF	564464	MuxPower	20amp	4.3						
CB16	FJB_VECF	564464	MuxPower	20amp	4.3						
CB17	FJB_VECF	564464	MuxPower	20amp	4.3						
CB18	FJB_VECF	564464	MuxPower	20amp	4.3						
CB19	FJB_VECF	564464	MuxPower	20amp	4.3						
CB20	FJB_VECF	564464	DefrosterUnit	20amp	4.3						
CB21	FJB_VECF	564464	BreakerELD	20amp	4.3						
CB22	FJB_VECF	564464	VDS	20amp	4.3						
CB23	FJB_VECF	564464	BIO	20amp	4.3						
CB48	FJB_VECF	564464	Wipers	20amp	4.2						
CB128	RJB_VECR	564342	24VDFJB	30amp	5.1						
CB_DcDc	4rd_Lugg_Cmp	564238	Plasma	5amp	60.1						

BREAKERS LIST

No	Location	Part #	Function	Rating	Page						
CB1	RJB	563708	24WUPFJB	90amp	3.1						
CB2	RJB	568113	12ECURJB&12VDFJB	70amp	3.1						
CB3	RJB	563708	EVAP FAN	90amp	3.1						
CB5	RJB	564902	24WUPRJB	120amp	3.1						
CB6	RJB	568113	24VDRJB&WCL	70amp	3.1						
CB8	RJB	563708	12WUPRJB	90amp	3.1						
CB9	RJB	563705	Urea	40amp	3.1						
CB10	RJB	568114	12WupFJB	150amp	3.1						
CB11	RJB	568127	VSS	50amp	3.1						
CB12	RJB	563708	24VDInverter/Charger	90amp	3.1						
CB13	RJB	563708	24VDInverter	90amp	3.1						
CB14	FJB_VECF	564464	WiperSystem	20amp	4.3						
CB15	FJB_VECF	564464	MuxPower	20amp	4.3						
CB16	FJB_VECF	564464	MuxPower	20amp	4.3						
CB17	FJB_VECF	564464	MuxPower	20amp	4.3						
CB18	FJB_VECF	564464	MuxPower	20amp	4.3						
CB19	FJB_VECF	564464	MuxPower	20amp	4.3						
CB20	FJB_VECF	564464	DefrosterUnit	20amp	4.3						
CB21	FJB_VECF	564464	BreakerELD	20amp	4.3						
CB22	FJB_VECF	564464	VDS	20amp	4.3						
CB23	FJB_VECF	564464	BIO	20amp	4.3						
CB48	FJB_VECF	564464	Wipers	20amp	4.2						
CB128	RJB_VECR	564342	24VDFJB	30amp	5.1						
CB_DcDc	4rd_Lugg_Cmp	564238	Plasma	5amp	60.1						

CONNECTORS LIST

No	Location	Part #	Gender	No	Location	Part #	Gender
24SS_OP	Parcel_Rack_LH	563071	male	A36.JC	Front	562957	male
24SS_OP	Parcel_Rack_LH	563040	female	A36A.JA	Front	564325	male
24SS_OP_2	Parcel_Rack_LH	563071	male	A36A.JB	Front	562767	male
24SS_OP_2	Parcel_Rack_LH	563040	female	A39.P101	Parcel_Rack_LH	563201	male
A1	RJB	563975	male	A39.P901	Parcel_Rack_LH	563953	male
A2	FJB	563984	male	A50	P_Rack	563996	female
A5	Service_Cmpt	562428	female	A60.A	P_Rack	563071	male
A6	Engine_Cmpt	562427	male	A60.B	P_Rack	562706	female
A7	Rear_Axle_Cmpt	563979	male	A60.C	P_Rack	901110	male
A8.A	Dash	564698	male	A60.D	P_Rack	901110	male
A9.Cx1	FJB	564041	female	A60.E	P_Rack	560799	female
A9.Cx2	FJB	563678	male	A60.F	P_Rack	bidon	male
A9.Cx3	FJB	564037	female	A61.A	Parcel_Rack_LH	562464	male
A9.Cx4	FJB	564038	female	A61.B	Parcel_Rack_LH	562465	male
A10.X1	Engine_Cmpt	563135	male	A63	Roof	562090	male
A10.X3	Engine_Cmpt	563134	female	A65.A	Parcel_Rack_LH	563025	male
A11	Dash	563142	male	A65.B4	Parcel_Rack_LH	bidon	male
A12.A	DriverArea	564699	male	A65.B5	Parcel_Rack_LH	bidon	male
A14.A	Dash	562765	male	A65.B6	Parcel_Rack_LH	bidon	male
A14.B	Dash	562764	male	A65.D	Parcel_Rack_LH	bidon	male
A14.C	Dash	562767	male	A65.E	Parcel_Rack_LH	563071	male
A14.D	Dash	562766	male	A65.G1	Parcel_Rack_LH	563071	male
A15	Dash	562464	male	A65.G2	Parcel_Rack_LH	563071	male
A19	LH_Console	562878	female	A65.G3	Parcel_Rack_LH	563071	male
A20	FrontRoof	562465	male	A65.H1	Parcel_Rack_LH	561716	female
A21.A	Dash	564038	female	A65.H2	Parcel_Rack_LH	561716	female
A21.B	Dash	564700	male	A65.H3	Parcel_Rack_LH	561716	female
A22	Dash	564004	male	A65.J	Parcel_Rack_LH	562465	male
A23	P_Rack	564004	male	A69L.A	Parcel_Rack_LH	563025	male
A24	P_Rack	564004	male	A69L.B1	Parcel_Rack_LH	bidon	male
A25	Parcel_Rack_LH	563025	male	A69L.B2	Parcel_Rack_LH	bidon	male
A26.P1	Enginecmpt.	562350	male	A69L.B3	Parcel_Rack_LH	bidon	male
A26.P2	Enginecmpt.	563322	female	A69L.B4	Parcel_Rack_LH	bidon	male
A26.P4	Enginecmpt.	568088	male	A69L.C	Parcel_Rack_LH	bidon	male
A27	Service_Cmpt	562929	male	A69R.A	Parcel_Rack_RH	563025	male
A28	Service_Cmpt	562928	male	A69R.B1	Parcel_Rack_RH	bidon	male
A29	FJB	564004	male	A69R.B2	Parcel_Rack_RH	bidon	male
A31	P_Rack	564004	male	A69R.B3	Parcel_Rack_RH	bidon	male
A34.J	Enginecmpt.	568118	male	A69R.B4	Parcel_Rack_RH	bidon	male
A34.K	Enginecmpt.	564270	male	A69R.C	Parcel_Rack_RH	bidon	male
A34.L	Enginecmpt.	564269	male	A70a.A	Parcel_Rack	561540	female
A36.JA	Front	562767	male	A71	Dash	563884	male
A36.JB	Front	562765	male	A77	Parcelrack	564547	male

CONNECTORS LIST

No	Location	Part #	Gender	No	Location	Part #	Gender
A78	Parcelrack	562583	female	A121.Vsb	Dashboard	563678	male
A79	Parcelrack	562583	female	A121.Vsc	Dashboard	564037	male
A80	Parcelrack	562479	female	A121.Vsd	Dashboard	564118	male
A81.CN1	FJB	562767	male	A122.A	Parcel_Rack_LH	563960	male
A81.CN3A	FJB	564741	male	A122.B	Parcel_Rack_LH	563962	male
A81.CN3B	FJB	564742	male	A122.C1	Parcel_Rack_LH	563956	male
A83.A	FJB	565970	male	A122.C2	Parcel_Rack_LH	563957	male
A95.A	P_Rack	564489	female	A122.C3	Parcel_Rack_LH	563958	male
A95.B	P_Rack	562706	female	A123.A	Parcel_Rack_LH	563960	male
A95.C	P_Rack	562706	female	A123.B	Parcel_Rack_LH	563962	male
A96.A	Front	563678	male	A123.C1	Parcel_Rack_LH	563956	male
A96.B	Front	562795	male	A123.C2	Parcel_Rack_LH	563957	male
A97A	Front	563226	male	A123.C3	Parcel_Rack_LH	563958	male
A97A	Front	563613	female	A124.A	Parcel_Rack_LH	563960	male
A97B	Front	563226	male	A124.B	Parcel_rack	563962	male
A97B	Front	563613	female	A124.C1	Parcel_rack	563956	male
A97S.A1	Front	564401	male	A124.C2	Parcel_rack	563957	male
A97S.A2	Front	564402	male	A124.C3	Parcel_rack	563958	male
A97S.A3	Front	564403	male	A127	Dashboard	562957	male
A99	Dash	564205	male	A128	Dash	563878	male
A100	FrontAxelAnt	563515	male	A129	Parcel_Rack_LH	563878	male
A101	FrontAxelAnt	563515	male	A130	Driver_Area	563226	male
A102	FrontAxelAnt	563515	male	A131.A	Engine_Cmpt	561782	male
A107	EngineCmpt.	560336	male	A131.B	Engine_Cmpt	561781	female
A108	RJB	562766	male	A137A	Condensercmpt.	20429843	male
A109A	FJB	564141	male	A138	Cond_Cmpt	563787	male
A111	Lavatory	562550	female	A150	Modesty_LH	562957	male
A114A	Bumper	564252	male	A150LH	Modesty_LH	562957	male
A116	Dash	563872	female	A150RH	Modesty_RH	562957	male
A120.A	Dash	563960	male	A152.A	Parcelrack	561550	male
A120.B	Dash	563962	male	A152.B	Parcelrack	563071	male
A120.C1	Dash	563956	male	A152.C	Parcelrack	563071	male
A120.C2	Dash	563957	male	A152.D	Parcelrack	563071	male
A120.C3	Dash	563958	male	A152.E	Parcelrack	563071	male
A120.USB_COM	Dash	563878	male	A152.F	Parcelrack	563071	male
A120A.J1	Dashboard	563525	male	A152.G	Parcelrack	563071	male
A120A.J2	Dashboard	563526	female	A152.H	Parcelrack	563071	male
A120A.J3	Dashboard	563527	female	A152.I	Parcelrack	563071	male
A120A.USB	Dash	563878	male	A152.J	Parcelrack	563071	male
A120A.USB_COM	Dash	563878	male	A152.K	Parcelrack	562779	male
A121.B	Dash	bidon	male	A152.L	Parcelrack	562779	male
A121.USB	Dash	563878	male	A162.A	Front_Roof	561690	male
A121.Vsa	Dashboard	563679	male	A162.B	Front_Roof	561782	male

CONNECTORS LIST

No	Location	Part #	Gender	No	Location	Part #	Gender
A164.A	Front_Roof	561690	male	AE49.J3	RJB	565957	male
A164.B	Front_Roof	561782	male	AE50.J1	RJB	563679	male
A166	Front_Roof	561637	male	AE50.J2	RJB	564037	male
A614.A	P_RACK	561550	male	AE50.J3	RJB	565957	male
A614.C1	P_RACK	563071	male	AE51.J1	RJB	563679	male
A614.C2	P_RACK	563071	male	AE51.J2	RJB	564037	female
A614.C3	P_RACK	563071	male	AE51.J3	RJB	565957	male
A614.C4	P_RACK	563071	male	AE52.J1	RJB	563679	male
A614.C5	P_RACK	563071	male	AE52.J2	RJB	564037	female
A614.C6	P_RACK	563071	male	AE52.J3	RJB	565957	male
A614.I/O	Parcel_Rack	bidon	male	AE53.J1	RJB	563679	male
A614.P1	Parcel_Rack	562783	male	AE53.J2	RJB	564037	female
A614.P2	Parcel_Rack	562783	male	AE53.J3	RJB	565957	male
A614.P3	Parcel_Rack	562783	male	AE54.J1	Evaporatorcmpt.	563679	male
AE41.J1	FJB	563679	male	AE54.J2	Evaporatorcmpt.	564037	female
AE41.J2	FJB	564037	female	AE54.J3	Evaporatorcmpt.	565957	male
AE41.J3	FJB	564004	male	AE55.J1	Dash	563679	male
AE42.J1	FJB	563679	male	AE55.J2	Dash	564037	female
AE42.J2	FJB	564037	female	AE55.J3	Dash	564004	male
AE42.J3	FJB	564004	male	AE56.J1	Dash	563679	male
AE43.J1	FJB	563679	male	AE56.J2	Dash	564037	male
AE43.J2	FJB	564037	male	AE56.J3	Dash	564004	male
AE43.J3	FJB	565957	male	AE57.J1	WCLcmpt.	563679	male
AE44.J1	FJB	563679	male	AE57.J2	WCLcmpt.	564037	male
AE44.J2	FJB	564037	female	AE57.J3	WCLcmpt.	564004	male
AE44.J3	FJB	565957	male	AE58.J1	P_Rack	563679	male
AE45.J1	FJB	563679	male	AE58.J2	P_Rack	564037	male
AE45.J2	FJB	564037	female	AE58.J3	P_Rack	565957	male
AE45.J3	FJB	565957	male	Alt_LL.B	Engine_Cmpt	564410	female
AE46.J1	FJB	563679	male	Alt_UR.B	Engine_Cmpt	564469	female
AE46.J2	FJB	564037	female	AltLL.A	Enginecmpt.	563746	female
AE46.J3	FJB	565957	male	AltLL.B	Enginecmpt.	560815	female
AE47.J1	RH_console	563679	male	AltLL.C	Enginecmpt.	564469	female
AE47.J2	RH_console	564037	female	AltLR.A	enginecmpt.	563746	female
AE47.J3	RH_console	565957	male	AltLR.B	Enginecmpt.	560815	female
AE48.J1	RH_console	563679	male	AltLR.C	Enginecmpt.	564469	female
AE48.J2	RH_console	564037	female	AltUR.A	Enginecmpt.	563746	female
AE48.J3	RH_console	565957	male	AltUR.B	Enginecmpt.	560815	female
AE49.J1	RJB	563679	male	AltUR.C	Enginecmpt.	564469	female
AE49.J2	RJB	564037	male	B85	Engine_Cmpt	563815	male

CONNECTORS LIST

No	Location	Part #	Gender	No	Location	Part #	Gender
B96	Engine_Cmpt	563821	male	C16	RJB	561605	female
B96B	Engine_Cmpt	563823	male	C17	RJB	560195	male
B97	Engine_Cmpt	563816	male	C17	RJB	560169	female
B98	Engine_Cmpt	563817	male	C18	FJB	561986	male
B99	Engine_Cmpt	563815	male	C18	FJB	561987	female
B115A	Enginecmpt.	564226	male	C19	RJB	561986	male
B142C	Urea_Cmpt	563515	male	C19	RJB	561987	female
B310	Enginecmpt.	565967	male	C20A	Evap_Cmpt	562485	male
C1	FJB	563589	male	C20A	Evap_Cmpt	562486	female
C1	FJB	563590	female	C20B	Evap_Cmpt	562485	male
C1S	FJB	563589	male	C20B	Evap_Cmpt	562486	female
C1S	FJB	563590	female	C22	FJB	561986	male
C2	Service_Cmpt	563580	male	C22	FJB	561987	female
C2	Service_Cmpt	563581	female	C23	Evaporatorcmpt.	564034	male
C2A	FJB	563580	male	C23	Evaporatorcmpt.	564035	female
C2A	FJB	563581	female	C24_plug	Evap_Cmpt	561690	male
C2B	FJB	563580	male	C24_socket	Evap_Cmpt	561566	female
C2B	FJB	563581	female	C25	P_Rack	561734	male
C3_plug	RJB	563589	male	C25	P_Rack	561735	female
C3_socket	RJB	563590	female	C25A	P_Rack	561734	male
C3AP	FJB	563589	male	C25A	P_Rack	561735	female
C3AP	FJB	563590	female	C26	Ureacmpt.	563226	male
C3AS	FJB	563589	male	C26	Ureacmpt.	563613	female
C3AS	FJB	563590	female	C26A	Ureacmpt.	568110	male
C3S	RJB	563593	male	C26A	Ureacmpt.	568109	female
C3S	RJB	563590	female	C26B	Ureacmpt.	563227	male
C4	FJB	563580	male	C26B	Ureacmpt.	563614	female
C4	FJB	563581	female	C27	Front	563618	male
C5	FJB	563589	male	C27	Front	563616	female
C5	FJB	563590	female	C28	Dash	561986	male
C8	FJB	568112	male	C28	Dash	561987	female
C8	FJB	568111	female	C29	3rd_Lugg_Cmpt	563652	female
C9	RJB	561986	male	C29	4rd_Lugg_Cmpt	563651	male
C9	RJB	561987	female	C30	3rd_Lugg_Cmpt	561710	male
C10	Engine_Cmpt	562581	male	C30	3rd_Lugg_Cmpt	561709	female
C10	Engine_Cmpt	562583	female	C31W	Lugg_Cmpt	563227	male
C12	Engine_Cmpt	562581	male	C31W	Lugg_Cmpt	563614	female
C12	Engine_Cmpt	562583	female	C32	Lavatory	561734	male
C14	FJB	563580	male	C32	Lavtory	561735	female
C14	FJB	563581	female	C32W	Lugg_Cmpt	561734	male
C15A	Evaporatotcmpt.	568109	female	C32W	Lugg_Cmpt	561735	female
C15A	Evapotatorcmpt.	568110	male	C33	WCLcmpt.	564034	male
C16	RJB	561577	male	C33	WCLcmpt.	564035	female

CONNECTORS LIST

No	Location	Part #	Gender	No	Location	Part #	Gender
C34	Dash	561986	male	C59	RJB	561642	female
C34	Dash	561987	female	C63	Entrace_Door	562581	male
C35	Dash	561986	male	C63	Entrace_Door	562583	female
C35	Dash	561987	female	C64	Enginecmpt.	568110	male
C36	FJB	561986	male	C64	Enginecmpt.	568109	female
C36	FJB	561987	female	C66_plug	Evap_Cmpt	561577	male
C37	P_Rack	561986	male	C66_socket	Evap_Cmpt	561605	female
C37	P_Rack	561987	female	C71	FJB	561646	male
C38	P_Rack	561986	male	C87	Engine_Cmpt	562485	male
C38	P_Rack	561987	female	C87	Engine_Cmpt	562486	female
C38A	P_Rack	561515	male	C88	WCL_Cmpt.	563226	male
C38A	P_Rack	561552	female	C88	WCL_Cmpt.	563613	female
C39	Parcelrack	562503	male	C90	RJB	563582	male
C39	Parcelrack	562507	female	C90	RJB	563583	female
C39A	Firesuppressioncmpt.	561782	male	C91	RJB	562285	male
C39A	Firesuppressioncmpt.	561781	female	C91	RJB	562282	female
C40W	P_Rack	561515	male	C94	FJB	563589	male
C40W	P_Rack	561552	female	C99	Enginecmpt.	562581	male
C41	RJB	561782	male	C99	Enginecmpt.	562583	female
C41	RJB	561781	female	C100	Evaporatorcmpt.	562477	male
C42	Front	562285	male	C100	Evaporatorcmpt.	562479	female
C42	Front	562282	female	C100S	Evaporator_Cmpt.	562477	male
C43	Front	562581	male	C100S	Evaporator_Cmpt.	562479	female
C43	Front	562583	female	C107A	Enginecmpt.	562885	female
C44_plug	FJB	561577	male	C107A	Enginecmpt.	562884	female
C44_socket	FJB	561605	female	C107B	Enginecmpt.	562885	female
C45	Front	561646	male	C107B	Enginecmpt.	562884	female
C45	Front	561645	female	C107C	Enginecmpt.	562885	female
C46	3rdlugg.cmpt.	562549	male	C107C	Enginecmpt.	562884	female
C46	3rdlugg.cmpt.	562550	female	C110	Dash	568110	male
C47	FJB	565207	male	C110	Dash	568109	female
C48	RJB	565208	male	C119A	Rear_engine_door	568110	male
C49	FJB	562005	male	C119A	Rear_engine_door	568109	female
C49	FJB	561714	female	C129	Dashboard	562464	male
C54	Engine_Cmpt.	563226	male	C129	Dashboard	565871	female
C54	Engine_Cmpt.	563613	female	C131A	Engine_Cmpt	561782	male
C54A	Ureacmpt.	568110	male	C131A	Engine_Cmpt	561781	female
C54A	Ureacmpt.	568109	female	C131B	Engine_Cmpt	561782	male
C54B	Engine_Cmpt.	562477	male	C131B	Engine_Cmpt	561781	female
C54B	Engine_Cmpt.	562479	female	C150	Modesty_LH	562957	male
C55	Evap_Cmpt	561577	male	C150	Modesty_LH	564406	female
C55	Evap_Cmpt	561605	female	C152	Cond_Cmpt	561611	male
C59	RJB	561643	male	C152	Cond_Cmpt	561610	female

CONNECTORS LIST

No	Location	Part #	Gender	No	Location	Part #	Gender
C173	Modesty_LH	563040	female	C769	Parcel_Rack	901062	male
C193_plug	RJB	563589	male	C769	Parcel_Rack	901283	female
C193_socket	RJB	563590	female	C777	Dashboard	562581	male
C194	FJB	563589	male	C777	Dashboard	562583	female
C194	FJB	563590	female	C_A69R	Parcel_Rack	563025	male
C222	FJB	562477	male	C_Audio_HDMI_L	Parcel_Rack	901062	male
C222	FJB	562479	female	C_Audio_HDMI_L	Parcel_Rack	901283	female
C279	Service_Cmpt	562479	female	C_Audio_HDMI_R	Parcel_Rack	901062	male
C355	RJB	563582	male	C_Audio_HDMI_R	Parcel_Rack	901283	female
C355	RJB	565887	female	C_AUX	Parcelrack	563071	male
C380A	Dash	564222	male	C_AUX	Parcelrack	563040	female
C380A	Dash	564224	female	C_LineOut	Parcelrack	563962	male
C381	Parcel_Rack	561847	male	C_LineOut	Parcelrack	564489	female
C382	Under_Seat	561580	male	C_Mo9	Evap_Cmpt	561577	male
C382	Under_Seat	561582	female	C_Mo9	Evap_Cmpt	561605	female
C397	RJB	562285	male	CCAN1	FJB	562650	male
C397	RJB	562282	female	CCAN1	FJB	562649	female
C463	Rearaxlecmpt.	568111	male	CCAN2	FJB	562650	male
C463	Rearaxlecmpt.	568112	female	CCAN2	FJB	562649	female
C464	FJB	564222	male	CCAN3	FJB	562650	male
C464	FJB	564224	female	CCAN3	FJB	562649	female
C464A	Dash	564222	male	CCAN4	FJB	562650	male
C464A	Dash	564224	female	CCAN4	FJB	562649	female
C464B	FJB	564222	male	CCust	RJB	562477	male
C464B	FJB	564224	female	CCust	RJB	562479	female
C465	Parcelrack	562581	male	CFHPR1	Parcelrack	564560	male
C465	Parcelrack	562583	female	CP1	Passenger_Area	561782	male
C542	Parcelrack	561550	male	CP1	Passenger_Area	561781	female
C542	Parcelrack	561667	female	CP2	Passenger_Area	561782	male
C543	LH_Parcel_Rack	561607	male	CP2	Passenger_Area	561781	female
C543	LH_Parcel_Rack	561606	female	CP3	Passengersarea	561782	male
C564	Parcelrack	562503	male	CP3	Passengersarea	561781	female
C564	Parcelrack	562507	female	CP4	Passenger_Area	561782	male
C566	Parcelrack	562503	male	CP4	Passenger_Area	561781	female
C566	Parcelrack	562507	female	CP5	Passenger_Area	561782	male
C567	Parcelrack	562503	male	CP5	Passenger_Area	561781	female
C567	Parcelrack	562507	female	CSX1	Engine_Cmpt	563135	male
C614	Passenger_Area	563071	male	CSX1	Engine_Cmpt	563134	female
C614	Passenger_Area	563040	female	CSX3	Engine_Cmpt	563135	male
C615	Passenger_Area	563071	male	CSX3	Engine_Cmpt	563134	female
C615	Passenger_Area	563040	female	CT_IN	Rear_Vehicle	560167	male
C768	Parcel_Rack	901062	male	CT_IN	Rear_Vehicle	560159	female
C768	Parcel_Rack	901283	female	CT_Out	Rear_Vehicle	560233	female

CONNECTORS LIST

No	Location	Part #	Gender	No	Location	Part #	Gender
EI	Enginecmpt.	563739	male	L72	Rear_Vehicle	562155	male
L1A	Enginecmpt.	560774	male	L74	Rear_Vehicle	562155	male
L16.A	Frontroof	562615	female	L75	Rearenginedoor	562155	male
L16.B	Frontroof	562615	female	L76	Rear_engine_door	562155	male
L17.A	Frontroof	562615	female	L81.A	Rear_Vehicle	562835	female
L17.B	Frontroof	562615	female	L81.B	Rear_Vehicle	562834	male
L18	Entrance_Door	563590	female	L82A	Rearvehicule	562348	female
L21	Upper_front	560605	female	L83A	Rearvehicule	562348	female
L22	Upper_front	560605	female	L84	Rear_roof	560605	female
L23	Upper_front	560605	female	L85	Rear_roof	560605	female
L24	Upper_front	560605	female	L86	Rear_roof	560605	female
L25	Upper_front	560605	female	L87	Rear_roof	560605	female
L26	Upper_front	560605	female	L88	Rear_roof	560605	female
L27	Upper_front	560605	female	L89	Rear_roof	560605	female
L52	Parcelrack	560898	male	L90	Rear_roof	560605	female
L52	Parcelrack	560900	female	L93.B	Engine_Cmpt.	563069	female
L52A	Parcelrack	560898	male	L94.B	Engine_Cmpt.	563069	female
L53	Parcelrack	560898	male	L95	Outside_Front_LH	562485	male
L53	Parcelrack	560900	female	L95A	Outside_Front_LH	562485	male
L53A	Parcelrack	560898	male	L96	Outside_Front_RH	562485	male
L54	Parcelrack	560898	male	L96A	Outside_Front_RH	562485	male
L54	Parcelrack	560900	female	L140	Lavatory	561247	male
L54A	Parcelrack	560898	male	L142	Lavatory	562006	female
L55	Parcelrack	560898	male	L172RH	Modesty_RH	564719	male
L55	Parcelrack	560900	female	L173	Parcelrack	563590	female
L55A	Parcelrack	560898	male	L174A	Parcelrack	563590	female
L56	Parcelrack	560898	male	L175	Engine_Cmpt.	563590	female
L56	Parcelrack	560900	female	L176	5th_Lugg_Cmpt	561247	male
L56A	Parcelrack	560898	male	L177	5th_Lugg_Cmpt	561247	male
L57	Parcelrack	560898	male	L178	3rd_Lugg_Cmpt	561247	male
L57	Parcelrack	560900	female	L179	3rd_Lugg_Cmpt	561247	male
L57A	Parcelrack	560898	male	L180	2nd_Lugg_Cmpt	561247	male
L58	Parcelrack	560898	male	L181	2nd_Lugg_Cmpt	561247	male
L58	Parcelrack	560900	female	L182	1st_Lugg_Cmpt	561247	male
L58A	Parcelrack	560898	male	L183	1st_Lugg_Cmpt	561247	male
L63	Front_Side_LH	562155	male	L184	Servicecmpt.	561247	male
L64	Outside_Front_RH	562155	male	L185.A	Servicecmpt.	561539	male
L65	Outside_Front_LH	562155	male	L185.B	Servicecmpt.	561539	male
L66	Out_Side_Front_LH	562155	male	L186.A	Dash	561539	male
L67	4th_Lugg_Cmpt	562155	male	L186.B	Dash	561539	male
L68	4th_Lugg_Cmpt	562155	male	L187	Engine_Cmpt	561690	male
L69	4th_Lugg_Cmpt	562155	male	L188	Service_Cmpt	562486	female
L70	4th_Lugg_Cmpt	562155	male	L199	Enginecmpt.	562848	male

CONNECTORS LIST

No	Location	Part #	Gender	No	Location	Part #	Gender
L204	Parcel_Rack_RH	562803	male	R3	RJB	563409	male
L205	Enginecmpt.	562485	male	R4	FJB	564496	male
L206	Parcel_Rack_RH	562803	male	R12	Evap_Cmpt	563409	male
L282	Engine_Cmpt	561690	male	R16	RJB	564496	male
L285.A	Rear_Vehicle	562835	female	R20	RJB	564496	male
L285.B	Rear_Vehicle	562834	male	R26	Evap_Cmpt	564496	male
L286.A	Rear_Vehicle	562835	female	R29	RJB	563409	male
L286.B	Rear_Vehicle	562834	male	R30	FJB	564496	male
L290	Engine_door	562565	female	R31	FJB	564496	male
L291	Engine_door	562565	female	R34	RJB	564210	male
L298A	Enginecmpt.	563590	female	R36	Dash	564496	male
L306	RJBcmpt.	561247	male	R37	Dash	564496	male
L319	Under_WCL_platform	561247	male	R38	FJB	564496	male
L350A.A	Rearaxlecmpt.	564552	male	R40	RJB	564496	male
L350A.B	Rearaxlecmpt.	563340	male	R47	Parcelrack	564496	male
Mic_Driver_1.A	Parcel_rack	560999	male	R_12VISS	Parcel_rack	564496	male
Mic_Driver_2.A	Parcel_rack	560999	male	Res3.A	RJB	563590	female
Mic_Guide_1.A	Parcel_rack	560999	male	Res4	FJB	563590	female
Mic_Guide_3.A	Parcel_rack	560999	male	Res6	FJB	563590	female
Mo12	Engine_Cmpt	561690	male	Res6A	FJB	563589	male
Mo13	Engine_Cmpt	561690	female	Res6A	FJB	563590	female
Mo14	Engine_Cmpt	561566	female	Res6B	FJB	563589	male
Mo15	Front_Ceiling	563517	female	Res6B	FJB	563590	female
Mo16	Front_Ceiling	563517	female	Res15	Engine_Cmpt	561782	male
Mo17	RH_Console	562350	male	Res7	Engine_Cmpt	563590	female
Mo65	Enginecmpt.	568089	male	Res31	Ureacmpt.	562350	male
Mo67	Enginecmpt.	568089	male	Res32	Ureacmpt.	563764	female
Mo68	Enginecmpt.	568089	male	Se13	Engine_Cmpt	562350	male
Mo69	Enginecmpt.	568089	male	Se14.A	Driver_Area	561782	male
Mo70	Enginecmpt.	568089	male	Se14.B	Driver_Area	561781	female
Mo71	Enginecmpt.	568089	male	Se18	Servicecmpt.	561566	female
Mo72	Enginecmpt.	568089	male	Se19_P	Service_Cmpt	563677	male
Mo73	Enginecmpt.	568089	male	Se19_S	Service_Cmpt	563677	male
PC1	FJB	562650	male	Se23	Engine_Cmpt	563159	male
PC1	FJB	562649	female	Se24	Evap_Cmpt	563758	female
PF	FJB	561782	male	Se25	Passenger_Area	561248	female
PF	FJB	561781	female	Se28	Pneumatic_plate	561690	male
PF1	Passenger_Area	561782	male	Se29	Engine_Cmpt	561566	female
PF1	Passenger_Area	561781	female	Se30	Enginedoor	562877	female
PR	Parcelrack	561782	male	Se31	Enginedoor	562877	female
PR	Parcelrack	561781	female	Se32	Rear_Axle_Cmpt	562426	male
PR1	Passenger_Area	561782	male	Se33	Rear_Axle_Cmpt	562856	male
PR1	Passenger_Area	561781	female	Se35	Rear_Axle_Cmpt	562426	male

CONNECTORS LIST

No	Location	Part #	Gender	No	Location	Part #	Gender
Se36	Rear_Axle_Cmpt	562427	male	spBar13	Enginecmpt.	564135	male
Se37	Front_Axle_LH	641132	female	spBar14	Enginecmpt.	564135	male
Se38	Front_Axle_RH	641132	female	spBar15	Enginecmpt.	564135	male
Se39	Rear_Axle_LH	641132	female	spBar16	Enginecmpt.	564135	male
Se40	Rear_Axle_LH	641132	female	spBar19	Condensorcmpt.	564135	male
Se41	Condensor_cmpt.	562877	female	spBar20	Condensorcmpt.	564135	male
Se46	Rearaxlecmpt.	562348	female	spBar21	Condensorcmpt.	564135	male
Se63	Rearaxlecmpt.	641132	female	spBar22	Enginecmpt.	564135	male
Se64	Rearaxlecmpt.	641132	female	spBar23	Enginecmpt.	564135	male
Se65	Dash	564042	female	spBar24	Enginecmpt.	564135	male
Se66	FJB	564039	female	SpkDr_L	Parcel_Rack_LH	563994	male
Se67	Frontaxlecmpt.	563159	female	SpkDr_R	Parcel_Rack_RH	563994	male
Se69	Frontaxlecmpt.	563159	female	Sub1.A	Passenger_Area	564004	female
Se74	Rear_Axle_Cmpt	563340	male	Sub2.A	Passenger_Area	564004	female
Se79	Front_Axle	563340	male	Sw10A	Dash	563498	male
Se100	WCLdoor	562479	female	Sw12	Dash	563498	female
So7	Service_Cmpt	561690	male	Sw14	Dash	563498	male
So8	Servicecmpt.	641385	male	Sw16	Dash	563498	male
So9	Enginecmpt.	560016	female	Sw17	Dash	563498	male
So10	Cond_Cmpt	562485	male	Sw18A	Dash	563498	male
So11	Cond_Cmpt	561566	female	Sw20	Dash	563498	male
So13	Evap_Cmpt	563204	female	Sw23	Dash	563498	female
So14	Servicecmpt.	641385	male	Sw24	Dash	563498	male
So15	Servicecmpt.	641385	male	Sw25	Dash	563498	male
So16	Servicecmpt.	641385	male	Sw26	Dash	563498	female
So17	Servicecmpt.	562848	male	Sw27	Dash	563498	male
So20	Servicecmpt.	641385	male	Sw29	Dash	563498	male
So21	Front_Axle_Cmpt	564046	female	Sw30	Dash	563135	male
So22	Front_Axle_Cmpt	564046	female	Sw32	Dash	561477	female
So23	Rear_Axle_Cmpt	564046	female	Sw33	Dash	561476	male
So24	Rear_Axle_Cmpt	564046	female	Sw34	Outside_Front_RH	562477	male
So27	Rearaxlecmpt.	564045	female	Sw37	Dash	563498	male
So50	Rearaxlecmpt.	564046	female	Sw38	Dash	563498	male
So51	Rearaxlecmpt.	641385	male	Sw39.A	RJB	562403	female
So52	Rearaxlecmpt.	564045	female	Sw39.B	RJB	562403	female
So53	Rearaxlecmpt.	641385	male	Sw40	LH_Console	561690	male
So54	Enginecmpt.	564045	female	Sw41	LH_Console	562749	male
spBar4	Enginecmpt.	564135	male	Sw42	Lugg_Cmpt	561636	female
spBar5	Enginecmpt.	564135	male	Sw43	Lugg_Cmpt	563498	female
spBar6	Enginecmpt.	564135	male	Sw44.A	Lugg_Cmpt	562485	male
spBar7	Enginecmpt.	564135	male	Sw44.B	Lugg_Cmpt	562486	female
spBar11	Engine_Cmpt.	564135	male	Sw45.A	5th_Lugg_Cmpt	562485	male
spBar12	Engine_Cmpt.	564135	male	Sw45.B	5th_Lugg_Cmpt	562486	female

CONNECTORS LIST

No	Location	Part #	Gender	No	Location	Part #	Gender
Sw46.A	5th_Lugg_Cmpt	562485	male	VECF11	FJB	563184	male
Sw46.B	5th_Lugg_Cmpt	562486	female	VECF12	FJB	563187	male
Sw47.A	3rd_Lugg_Cmpt	562485	male	VECR1	RJB	563186	male
Sw47.B	3rd_Lugg_Cmpt	562486	female	VECR2	RJB	563183	male
Sw48.A	3rd_Lugg_Cmpt	562485	male	VECR3	RJB	563185	male
Sw48.B	3rd_Lugg_Cmpt	562486	female	VECR4	RJB	563182	male
Sw49.A	2nd_Lugg_Cmpt	562485	male	VECR9	RJB	563448	male
Sw49.B	2nd_Lugg_Cmpt	562486	female	VECR10	RJB	563181	male
Sw50.A	2nd_Lugg_Cmpt	562485	male	VECR11	RJB	563184	male
Sw50.B	2nd_Lugg_Cmpt	562486	female	VECR12	RJB	563187	male
Sw51.A	1st_Lugg_Cmpt	562485	male	VECT3	Rear_vehicule	563718	male
Sw51.B	1st_Lugg_Cmpt	562486	female	VECT4	Rear_vehicule	563714	male
Sw52.A	1st_Lugg_Cmpt	562485	male	Y80	Engine_Cmpt	563789	male
Sw52.B	1st_Lugg_Cmpt	562486	female	Y81	Cond_Cmpt	563793	male
Sw55.A	Lavatory	560488	female				
Sw55.B	Lavatory	560488	female				
Sw56.A	Lavatory	560488	female				
Sw56.B	Lavatory	560488	female				
Sw58	Engine_Cmpt.	563135	male				
Sw59	Enginecmpt.	563135	male				
Sw64	RJB	563498	male				
Sw82	RJB	563135	male				
Sw83	RJB	564699	male				
Sw85	LH_Console	562749	male				
Sw95.A	WCLdoor	562615	female				
Sw95.B	WCLdoor	562615	female				
Sw95.C	WCLdoor	562615	female				
Sw96.A	WCL_Door	562615	female				
Sw96.B	WCL_Door	562615	female				
Sw96.C	WCLdoor	562615	female				
Sw97.A	WCLsystem	562615	female				
Sw97.B	WCLsystem	562615	female				
Sw97.C	WCLsystem	562615	female				
Sw98.A	WCLsystem	562615	female				
Sw98.B	WCLsystem	562615	female				
Sw98.C	WCLsystem	562615	female				
Sw152	Driver_Area	562471	male				
VECF1	FJB	563186	male				
VECF2	FJB	563183	male				
VECF3	FJB	563185	male				
VECF4	FJB	563182	male				
VECF9	FJB	563448	male				
VECF10	FJB	563181	male				

DIODES LIST

No	Location	Part #	Function	Page					
D1	FJB	561740	Accessoriesdiode	3.2					
D2	FJB	561740	Driverliquidsolenoiddiode	18.1					
D6	RJB	561740	FlybackdiodeMasterrelay	3.1					
D7	RH_Console	561740	Entracedoordiode	29.1					
D8	Evap_Cmpt	561740	Parcelrackliquidsolenoiddiode	18.3					
D9	Evap_Cmpt	561740	HVACdiode	17.1					
D10	Evap_Cmpt	561740	Pre-Heatdiode	17.1					
D11	Evap_Cmpt	561740	Passengersliquidsolenoiddiode	18.2					
D12	FJB	565973	Hornwhilefireextinguisherdiode	9.1					
D13	FJB	561740	Frontclearancelightsdiode	26.1					
D14	FJB	561740	FireExtinguisher	9.1					
D18	FJB	561740	5thluggagecompartementlightingdiode	25.1					
D29	RJB	561740	FlybackdiodeUnloader	18.2					
D30	Evap_Cmpt	561740	FlybackdiodeWaterpump	18.2					
D31	RJB	561740	FlybackdiodeA/Cclutch	18.2					
D32	Engine_Cmpt	561740	FlybackdiodeAirexhaust	11.1					
D33	RJB	561740	FlybackdiodeFlushingpump	11.1					
D41	FJB	561740	Avoidvoltagebackfeed	3.2					
D43	FJB	561740	Avoidvoltagebackfeed	3.2					
D44	FJB	561740	Ignitiondiode	3.2					
D60	RJB	560931	Offshoreheatingsystem	17.1					
D62.	Rear_Roof	561740	PeakRevdiode	18.5					
D63.	Rear_Roof	561740	PeakRevdiode	18.5					
D73	Evap_Cmpt	561740	Evaporatorrelaydiode	18.2					
D80	Evap_Cmpt	561740	Cutoffwaterpreheaterdiode	38.1					

RESISTORS LIST

No	Location	Part #	Function	Page					
Res1	Front_Service_Pane	563593	TPMS	39.1					
Res2	Dashboard	563205	PullDownResistor	18.1					
Res3	RJB	563593	EndoflineresistanceBBUSnetwork120ohms4W	6.1					
Res4	FJB	563593	EndoflineresistanceBBUS1	6.1					
Res6	FJB	563593	EndoflineresistanceDBUSnetwork120ohms4W	6.2					
Res7	FJB	563593	EndoflineresistanceDBUSnetwork120ohms4W	6.2					
Res8	ParcelRack	563205	PullDownPrackFan	18.3					
Res9	Dashboard	563205	PullDownResistor	18.1					
Res10	Dashboard	563205	PullDownResistor	18.1					
Res11	RJB	563205	PullDownRes	4.2					
Res12	Dashboard	562498	ReduceMirrorSpeedResistor	31.1					
Res13	Dashboard	562498	ReduceMirrorSpeedResistor	31.1					
Res14	RJB	563205	Evaporatorfans620ohms2W	18.2					
Res15	Engine_Cmpt	563587	EndoflineresistanceFlamedetec.device10kohms	38.1					
Res16	FJB	563593	EndoflineresistanceDBUSnetwork120ohms4W	6.1					
Res17	FJB	563593	EndoflineresistanceDBUSnetwork120ohms4W	6.1					
Res21	RJB	563205	RJBcompartementlights620ohms2W	25.1					
Res22	RJB	563205	Luggagecmpt.lighting620ohms2W	25.1					
Res31	Cmpt_fuel_tank	41123	Ureatankheatingelement(Heatedhose)	14.2					
Res32	Cmpt_fuel_tank	41123	Ureatankheatingelement(Heatedhose)	14.2					
Res53	FJB	563593	EndoflineresistanceDBUSnetwork120ohms4W	6.2					
Res99	Dashboard	563593	CANNetwork	42.4					

RELAYS LIST

No	Location	Part #	Function	Page					
R1	RJB	560843	MasterRelay	3.1					
R3	RJB	563348	12vIgnition&Accessories	3.1					
R4	FJB	563332	Cutoffwaterpreheater	38.1					
R6	Front_Service_Panel	563269	EntDoorOpenRly	29.1					
R7	Front_Service_Panel	563269	EntDoorCloseRly	29.1					
R8	Front_Service_Panel	563269	Spare	4.3					
R9	Front_Service_Panel	563269	Spare	4.3					
R10	Front_Service_Panel	563269	Spare	4.3					
R12	Evap_cmpt.	563348	Evaporator	18.2					
R16	RJB	563332	MaxTempRly	17.1					
R20	RJB	563332	WaterPump	17.1					
R21	FJB	560493	IgnitionRelay	3.2					
R22	FJB_VECF	563269	EcuIgnition	4.1					
R23	FJB_VECF	563269	Shutdown	4.1					
R24	FJB_VECF	563269	EcuIShift	4.1					
R25	FJB_VECF	563269	24VIgnition	4.2					
R26	Evap_Cmpt	563332	Pre-Heat	18.2					
R29	RJB	563348	PreheaterVolvo	14.1					
R30	RJB	563269	12vEnginerunning	4.1					
R31	RJB	563332	12vIgnition	4.1					
R34	RJB	564218	12vRrEngineEcu	3.2					
R35	RJB	564218	24VRrVECUPwr	3.2					
R36	RJB	563269	FireExtinguisher	9.1					
R37	RJB	563269	Electrichorn	9.1					
R38	RJB	563269	USB/Outlet	30.2					
R40	RJB	563332	TransmissionIShift	15.2					
R45	RJB	564774	RlyChargerConnected	40.1					
R47	WCLPump	563332	WCLDoorOpenOption	36.1					
R52	RJB_VECT	563270	Clearancelights&sidemarkers	26.4					
R53	RJB_VECT	563270	Flashersleftside	26.4					
R54	RJB_VECT	563270	Brakelights	26.4					
R55	RJB_VECT	563270	Flashersrightside	26.4					
R56	RJB_VECT	563270	Tail&licencelights	26.4					
R210	Parcel_Rack_LH	560493	24vRelayLatching	5.2					
R300	Parcel_Rack_LH_1st_Cmpt	563332	BackUpCam	28.1					
R_12VISS	Parcel_Rack_LH_1st_Cmpt	563332	SoundSystem	35.6					
R_Starter	RJB	564095	StarterRelayControl	3.2					
R23A	RJB	563332	12VIgnition	4.1					

FUSES LIST

No	Location	Part #	Function	Rating	Page
F4	FuseBoxFJB	563280	TransIShift	5amp	4.2
F10	FuseBoxFJB	563280	Networks	Cluster	lights
F11	FuseBoxFJB	563282	Horn	20amp	4.1
F12	FuseBoxFJB	563284	Spare	15amp	4.1
F13	FuseBoxFJB	563284	12VDCustomer	15amp	4.1
F14	FuseBoxFJB	563135	Spare	30amp	4.1
F15	FuseBoxFJB	563280	VLink_Gateway	5amp	4.1
F16	FuseBoxFJB	563284	12VEng.run	15amp	4.1
F17	FuseBoxFJB	563165	Multiplexpower	30amp	4.1
F18	FuseBoxFJB	563165	Multiplexpower	30amp	4.1
F19	FuseBoxFJB	563165	Multiplexpower	30amp	4.1
F20	FuseBoxFJB	563280	Multiplexpower	5amp	4.1
F21	FuseBoxFJB	563165	Multiplexpower	30amp	4.1
F22	FuseBoxFJB	563280	ELD	5amp	4.1
F23	FuseBoxFJB	563165	ESP	30amp	4.1
F24	FuseBoxFJB	563284	12VIgn	15amp	4.1
F25	FuseBoxFJB	563284	12Voutlets	15amp	4.1
F26	FuseBoxFJB	563284	Spare	15amp	4.1
F27	FuseBoxFJB	563165	Spare	30amp	4.1
F29	FuseBoxFJB	563283	Networks	10amp	4.1
F30	FuseBoxFJB	563280	Networks	5amp	4.1
F33	FuseBoxFJB	563280	Multiplexpower	5amp	4.2
F34	FuseBoxFJB	563280	Multiplexpower	5amp	4.2
F35	FuseBoxFJB	563280	Multiplexpower	5amp	4.2
F36	FuseBoxFJB	563280	Startswitch	5amp	4.2
F37	FuseBoxFJB	563280	Haz/ExtDoorSw	5amp	4.2
F39	FuseBoxFJB	563284	24VD	15amp	4.2
F40	FuseBoxFJB	563284	Firesuppression	15amp	4.2
F41	FuseBoxFJB	563280	Spare	5amp	4.2
F42	FuseBoxFJB	563283	TransmissionIShift	10amp	4.1
F43	FuseBoxFJB	563282	TransmissionIShift	20amp	4.1
F44	FuseBoxFJB	563165	Multiplexpower	30amp	4.2
F45	FuseBoxFJB	563165	Multiplexpower	30amp	4.2
F46	FuseBoxFJB	563280	Multiplexpower	5amp	4.2
F47	FuseBoxFJB	563280	Multiplexpower	5amp	4.2
F50	FuseBoxFJB	563165	HVACdefroster	30amp	4.2
F51	FuseBoxFJB	563280	Destinationsigns	5amp	4.2
F52	FuseBoxFJB	563280	FMSGW	5amp	4.2
F53	FuseBoxFJB	563283	Clock&VSS	10amp	4.2
F54	FuseBoxFJB	563283	ElectronicMirror	10amp	4.2
F55	FuseBoxFJB	563283	B-UpCam	10amp	4.2
F56	FuseBoxFJB	563284	Spare	15amp	4.2
F57	FuseBoxFJB	563283	Spare	10amp	4.2

FUSES LIST

No	Location	Part #	Function	Rating	Page
F58	FuseBoxFJB	563284	Spare	15amp	4.2
F73	FuseBoxRJB	563283	EngineECUVolvo	20amp	5.1
F90	FuseBoxRJB	563282	Ureasystem	20amp	5.1
F91	FuseBoxRJB	563282	EngineECUVolvo	20amp	5.1
F95	FuseBoxFJB	563280	FMSGWIGN	5amp	4.2
F96	FuseBoxRJB	563280	*opt*	5amp	5.1
F99	FuseBoxRJB	563165	EngineECUVolvo	30amp	5.1
F100	FuseBoxRJB	563283	EngineECUVolvo	10amp	5.1
F101	FuseBoxRJB	564520	PowerforMasterrelay	300Amp	3.1
F105	FuseBoxRJB	563282	Spare	20amp	5.1
F106	FuseBoxRJB	563153	Multiplexpower	30amp	5.1
F107	FuseBoxRJB	563153	Multiplexpower	30amp	5.1
F108	FuseBoxRJB	563280	Networks	5amp	5.1
F109	FuseBoxRJB	563280	Engine&RJBcmpt.lights	5amp	5.1
F110	FuseBoxRJB	563283	TransmissionAlisson	10amp	5.1
F112	FuseBoxRJB	563165	Trailer	30amp	5.1
F113	FuseBoxRJB	563283	Spare	10amp	5.1
F114	FuseBoxRJB	563284	Spare	15amp	5.1
F115	FuseBoxRJB	563283	Spare	10amp	5.1
F116	FuseBoxRJB	563284	Spare	15amp	5.1
F117	FuseBoxRJB	563283	Spare	10amp	5.1
F118	FuseBoxRJB	563284	Spare	15amp	5.1
F119	FuseBoxRJB	563283	Spare	10amp	5.1
F120	FuseBoxRJB	563284	Spare	15amp	5.1
F121	FuseBoxRJB	563284	Powerforcustomer	15amp	5.1
F122	FuseBoxRJB	563283	Equalizer	10amp	5.1
F123	FuseBoxRJB	563153	Pre-heat	25amp	5.1
F124	FuseBoxRJB	563153	Pre-heat	25amp	5.1
F126	FuseBoxRJB	563280	EngineECU&HVAC	5amp	5.1
F127	FuseBoxRJB	563284	Pre-heat	15amp	5.1
F129	FuseBoxRJB	563284	Spare	15amp	5.1
F130	FuseBoxRJB	563284	Spare	15amp	5.1
F131	FuseBoxRJB	563280	Powerforcustomer	5amp	5.1
F132	FuseBoxRJB	563280	A57Pwr	5amp	5.1
F133	FuseBoxRJB	563165	A49Pwr	30amp	5.1
F134	FuseBoxRJB	563165	A52Pwr	30amp	5.1
F135	FuseBoxRJB	563165	A54Pwr	30amp	5.1
F136	FuseBoxRJB	563165	A53Pwr	30amp	5.1
F137	FuseBoxRJB	563280	Spare	5amp	5.1
F138	FuseBoxRJB	563280	Readinglamps&chime	5amp	5.1
F139	FuseBoxRJB	563283	Alternators	10amp	5.1
F140	FuseBoxRJB	563283	Spare	10amp	5.1
F141	FuseBoxRJB	563284	CondMo7	20amp	5.1

FUSES LIST

No	Location	Part #	Function	Rating	Page
F142	FuseBoxRJB	563284	CondMo8	20amp	5.1
F143	FuseBoxRJB	563284	CondMo27	20amp	5.1
F144	FuseBoxRJB	563284	CondMo28	20amp	5.1
F145	FuseBoxRJB	563153	P.Rack_Fan	25amp	5.1
F146	FuseBoxRJB	563283	Spare	10amp	5.1
F147	FuseBoxRJB	563284	24WUPCust	15amp	5.1
F148	FuseBoxRJB	563165	12VSoundSyst	30amp	5.1
F149	FuseBoxRJB	563282	UreaSystem	20amp	5.1
F150	FuseBoxRJB	563283	SpareVECR	10amp	5.1
F151	FuseBoxRJB	563284	Spare	15amp	5.1
F152	FuseBoxRJB	563283	Spare	10amp	5.1
F156	RJB	560893	UNICAN	3Amp	200.7
F157	Evap_Cmpt	560553	Plasma	5amp	60.1
F199	RJB	564520	Electricfansdrive	300A	13.1
F200	Parcel_Rack_LH_1st_Cmpt_	563284	VSSHDMI	15Amp	35.6
F201	Parcel_Rack_LH_1st_Cmpt_	563284	VSSHDMI	15Amp	35.6
F202	Parcel_Rack_LH_1st_Cmpt_	563284	VSSHDMI	15Amp	35.6
F203	Parcel_Rack_LH_1st_Cmpt_	563282	VSSHDMI	20Amp	35.6
F209	RJB	564174	Enginepre-heaterpower	150A	14.1
F243	RJB	560893	24VwhileEvap.relaypowered	3Amp	18.2
F300	Dashboard	563280	RearCameraRly	5amp	28.1
F301	VECT	563284	VECTTrailerinterface	15amp	26.4
F302	VECT	563284	VECTTrailerinterface	15amp	26.4
F303	VECT	563284	VECTTrailerinterface	15amp	26.4
F304	VECT	563284	VECTTrailerinterface	15amp	26.4
F305	VECT	563284	VECTTrailerinterface	15amp	26.4
F306	VECT	563284	VECTTrailerinterface	15amp	26.4
F307	VECT	563284	VECTTrailerinterface	15amp	26.4

FUSES LIST

No	Location	Part #	Function	Rating	Page
F4	FuseBoxFJB	563280	TransIShift	5amp	4.2
F10	FuseBoxFJB	563280	Networks	Cluster	lights
F11	FuseBoxFJB	563282	Horn	20amp	4.1
F12	FuseBoxFJB	563284	Spare	15amp	4.1
F13	FuseBoxFJB	563284	12VDCustomer	15amp	4.1
F14	FuseBoxFJB	563135	Spare	30amp	4.1
F15	FuseBoxFJB	563280	VLink_Gateway	5amp	4.1
F16	FuseBoxFJB	563284	12VEng.run	15amp	4.1
F17	FuseBoxFJB	563165	Multiplexpower	30amp	4.1
F18	FuseBoxFJB	563165	Multiplexpower	30amp	4.1
F19	FuseBoxFJB	563165	Multiplexpower	30amp	4.1
F20	FuseBoxFJB	563280	Multiplexpower	5amp	4.1
F21	FuseBoxFJB	563165	Multiplexpower	30amp	4.1
F22	FuseBoxFJB	563280	ELD	5amp	4.1
F23	FuseBoxFJB	563165	ESP	30amp	4.1
F24	FuseBoxFJB	563284	12VIgn	15amp	4.1
F25	FuseBoxFJB	563284	12Voutlets	15amp	4.1
F26	FuseBoxFJB	563284	Spare	15amp	4.1
F27	FuseBoxFJB	563165	Spare	30amp	4.1
F29	FuseBoxFJB	563283	Networks	10amp	4.1
F30	FuseBoxFJB	563280	Networks	5amp	4.1
F33	FuseBoxFJB	563280	Multiplexpower	5amp	4.2
F34	FuseBoxFJB	563280	Multiplexpower	5amp	4.2
F35	FuseBoxFJB	563280	Multiplexpower	5amp	4.2
F36	FuseBoxFJB	563280	Startswitch	5amp	4.2
F37	FuseBoxFJB	563280	Haz/ExtDoorSw	5amp	4.2
F39	FuseBoxFJB	563284	24VD	15amp	4.2
F40	FuseBoxFJB	563284	Firesuppression	15amp	4.2
F41	FuseBoxFJB	563280	Spare	5amp	4.2
F42	FuseBoxFJB	563283	TransmissionIShift	10amp	4.1
F43	FuseBoxFJB	563282	TransmissionIShift	20amp	4.1
F44	FuseBoxFJB	563165	Multiplexpower	30amp	4.2
F45	FuseBoxFJB	563165	Multiplexpower	30amp	4.2
F46	FuseBoxFJB	563280	Multiplexpower	5amp	4.2
F47	FuseBoxFJB	563280	Multiplexpower	5amp	4.2
F50	FuseBoxFJB	563165	HVACdefroster	30amp	4.2
F51	FuseBoxFJB	563280	Destinationsigns	5amp	4.2
F52	FuseBoxFJB	563280	FMSGW	5amp	4.2
F53	FuseBoxFJB	563283	Clock&VSS	10amp	4.2
F54	FuseBoxFJB	563283	ElectronicMirror	10amp	4.2
F55	FuseBoxFJB	563283	B-UpCam	10amp	4.2
F56	FuseBoxFJB	563284	Spare	15amp	4.2
F57	FuseBoxFJB	563283	Spare	10amp	4.2

FUSES LIST

No	Location	Part #	Function	Rating	Page
F58	FuseBoxFJB	563284	Spare	15amp	4.2
F73	FuseBoxRJB	563283	EngineECUVolvo	20amp	5.1
F90	FuseBoxRJB	563282	Ureasystem	20amp	5.1
F91	FuseBoxRJB	563282	EngineECUVolvo	20amp	5.1
F95	FuseBoxFJB	563280	FMSGWIGN	5amp	4.2
F96	FuseBoxRJB	563280	*opt*	5amp	5.1
F99	FuseBoxRJB	563165	EngineECUVolvo	30amp	5.1
F100	FuseBoxRJB	563283	EngineECUVolvo	10amp	5.1
F101	FuseBoxRJB	564520	PowerforMasterrelay	300Amp	3.1
F105	FuseBoxRJB	563282	Spare	20amp	5.1
F106	FuseBoxRJB	563153	Multiplexpower	30amp	5.1
F107	FuseBoxRJB	563153	Multiplexpower	30amp	5.1
F108	FuseBoxRJB	563280	Networks	5amp	5.1
F109	FuseBoxRJB	563280	Engine&RJBcmpt.lights	5amp	5.1
F110	FuseBoxRJB	563283	TransmissionAlisson	10amp	5.1
F112	FuseBoxRJB	563165	Trailer	30amp	5.1
F113	FuseBoxRJB	563283	Spare	10amp	5.1
F114	FuseBoxRJB	563284	Spare	15amp	5.1
F115	FuseBoxRJB	563283	Spare	10amp	5.1
F116	FuseBoxRJB	563284	Spare	15amp	5.1
F117	FuseBoxRJB	563283	Spare	10amp	5.1
F118	FuseBoxRJB	563284	Spare	15amp	5.1
F119	FuseBoxRJB	563283	Spare	10amp	5.1
F120	FuseBoxRJB	563284	Spare	15amp	5.1
F121	FuseBoxRJB	563284	Powerforcustomer	15amp	5.1
F122	FuseBoxRJB	563283	Equalizer	10amp	5.1
F123	FuseBoxRJB	563153	Pre-heat	25amp	5.1
F124	FuseBoxRJB	563153	Pre-heat	25amp	5.1
F126	FuseBoxRJB	563280	EngineECU&HVAC	5amp	5.1
F127	FuseBoxRJB	563284	Pre-heat	15amp	5.1
F129	FuseBoxRJB	563284	Spare	15amp	5.1
F130	FuseBoxRJB	563153	P.Rack Fan	25amp	5.1
F131	FuseBoxRJB	563280	Powerforcustomer	5amp	5.1
F132	FuseBoxRJB	563280	A57Pwr	5amp	5.1
F133	FuseBoxRJB	563165	A49Pwr	30amp	5.1
F134	FuseBoxRJB	563165	A52Pwr	30amp	5.1
F135	FuseBoxRJB	563165	A54Pwr	30amp	5.1
F136	FuseBoxRJB	563165	A53Pwr	30amp	5.1
F137	FuseBoxRJB	563280	Spare	5amp	5.1
F138	FuseBoxRJB	563280	Readinglamps&chime	5amp	5.1
F139	FuseBoxRJB	563283	Alternators	10amp	5.1
F140	FuseBoxRJB	563283	Spare	10amp	5.1
F141	FuseBoxRJB	563153	CondMo7	25amp	5.1

FUSES LIST

No	Location	Part #	Function	Rating	Page
F142	FuseBoxRJB	563153	CondMo8	25amp	5.1
F143	FuseBoxRJB	563153	CondMo27	25amp	5.1
F144	FuseBoxRJB	563153	CondMo28	25amp	5.1
F145	FuseBoxRJB	563153	Spare	25amp	5.1
F146	FuseBoxRJB	563283	Spare	10amp	5.1
F147	FuseBoxRJB	563284	24WUPCust	15amp	5.1
F148	FuseBoxRJB	563165	12VSoundSyst	30amp	5.1
F149	FuseBoxRJB	563282	UreaSystem	20amp	5.1
F150	FuseBoxRJB	563283	SpareVECR	10amp	5.1
F151	FuseBoxRJB	563284	Spare	15amp	5.1
F152	FuseBoxRJB	563283	Spare	10amp	5.1
F156	RJB	560893	UNICAN	3Amp	200.7
F157	Evap_Cmpt	560553	Plasma	5amp	60.1
F199	RJB	564520	Electricfansdrive	300A	13.1
F200	Parcel_Rack_LH_1st_Cmpt_	563284	VSSHDMI	15Amp	35.6
F201	Parcel_Rack_LH_1st_Cmpt_	563284	VSSHDMI	15Amp	35.6
F202	Parcel_Rack_LH_1st_Cmpt_	563284	VSSHDMI	15Amp	35.6
F203	Parcel_Rack_LH_1st_Cmpt_	563282	VSSHDMI	20Amp	35.6
F209	RJB	564174	Enginepre-heaterpower	150A	14.1
F243	RJB	560893	24VwhileEvap.relaypowered	3Amp	18.2
F300	Dashboard	563280	RearCameraRly	5amp	28.1
F301	VECT	563284	VECTTrailerinterface	15amp	26.4
F302	VECT	563284	VECTTrailerinterface	15amp	26.4
F303	VECT	563284	VECTTrailerinterface	15amp	26.4
F304	VECT	563284	VECTTrailerinterface	15amp	26.4
F305	VECT	563284	VECTTrailerinterface	15amp	26.4
F306	VECT	563284	VECTTrailerinterface	15amp	26.4
F307	VECT	563284	VECTTrailerinterface	15amp	26.4

Wire identification chart

**Note that the identification comes from the uphill component.*

Wire identification exemple: 12 - A47J1.8 - 16

Voltage	Circuit number	Wire size
0		0000
5	***Ground circuits:***	000
0/12	Electronic = Use I/O module number followed by an "R" and pin number. (ex: A47RJ1.8, A54RJ2.14)	00
0/24	Electronic ground studs = Use number "00" followed with the stud location and sequential number. (ex:00R1,00F4)	0
12	Chassis = Use number "0" followed by the ground stud location and sequential number. (ex: 0EV1, 0FH2)	1
24		2
120	***Power and voltage carrying circuits:***	3
ANA	Power distribution = Use uphill component identification as circuit name. (ex: F96, CB22)	4
BBUS	Multiplex outputs = Use output module number and pin number as circuit name. (ex: A55J1.4, A49J2.9)	6
DATA	Relays, diodes, resistors and any other component outputs =	8
DBUS	Use component name and pin number as circuit name. (ex: Sw55.A, R30.87, D12.B)	10
J1587	***Networks:***	12
J1939	DL0 = Bbus mux DL7 = Engine subnet	14
J2284	DL1 = J1939 DL9 = Power train subnet	16
LIN	DL2 = J2284 900 / 901 = J1587	18
PWM	DL3 = Dbus mux	20
GND		22
...OTHER		24

Alternators Remy

Mux Controlled

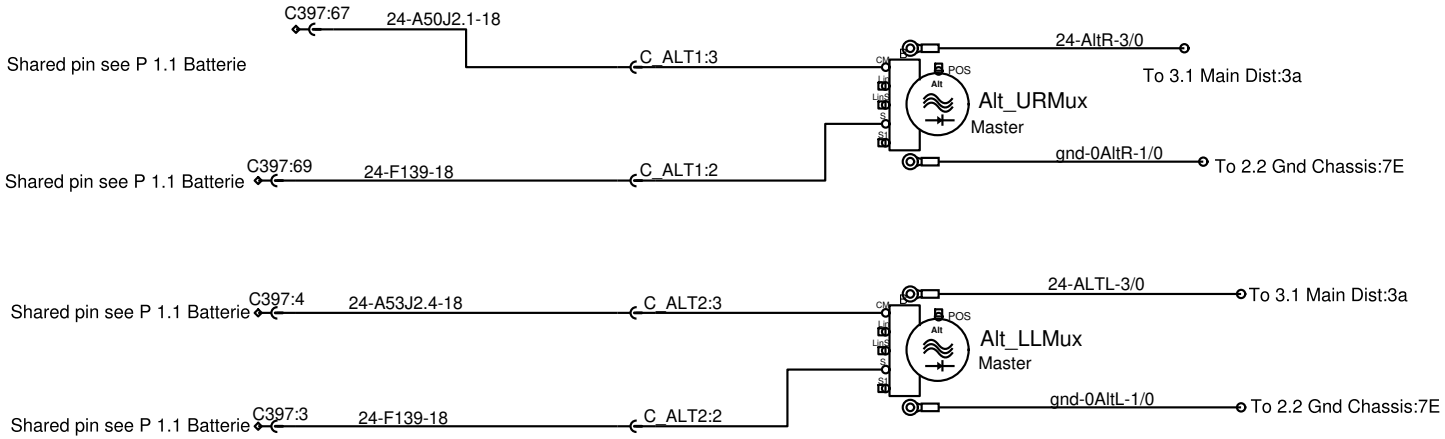

Lin Controlled

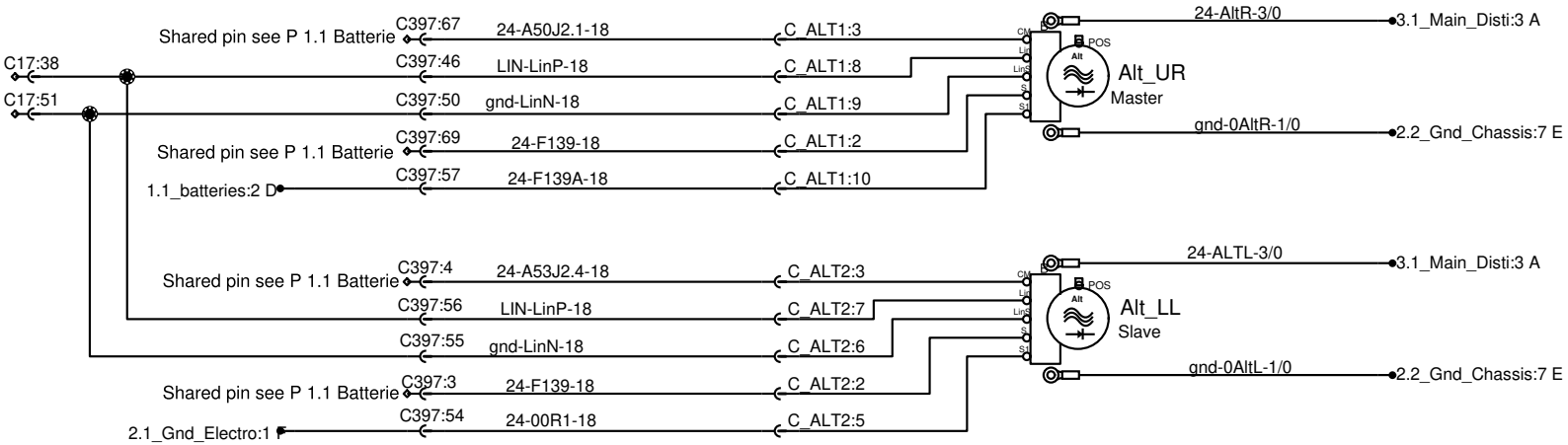

PREVOST®	WIRING DIAGRAM	No:D062140	Page:1.2	Rev:3

Electronic ground distribution

Ground distribution:
0-Electric gnd
00- Electronic Gnd

A-Dash - Lh console harness
F-Front junction box harness
FH-Front harness
R-Rear junction box harness
FR-Front to rear

Dash harness

gnd-00A-16 — 5.2_ISM_PRack:3 C
gnd-00A-16 — 23.1_Indirect_Lights:0 B
gnd-00A-16 — 60.0_Cust_Adapt_Dash_Interface:2 B
gnd-00A-16 — 31.2_ElectronicMirror:2 A
gnd-00A-18 — 33.1_Luggage_LockUnlock:1 B
gnd-00A-18 — 32.1_Kneeling:0 D
gnd-00A-18 — 16.1_ESP:0 A
gnd-00A-18 — 22.1_Reading_lamps:6 F
gnd-00A-18 — 29.1_Entrance_door:2 A
gnd-00A-18 — 22.1_Reading_lamps:4 F
gnd-00A-18 — 41.1_SunVisors:1 C
gnd-00A-18 — 19.1_Driver_Lights:1 E
gnd-00A-18 — 22.1_Reading_lamps:1 E
gnd-00A-18 — 18.3_Parcel_Rack_Vent:1 A
gnd-00A-18 — 16.1_ESP:0 A
gnd-00A-18 — 10.1_Cluster_ClkSpring_StalkBase:2 A
gnd-00A-18 — 14.1_Engine_Ecu:8 E
gnd-00A-18 — 32.1_Kneeling:0 C
gnd-00A-18 — 12.1_Brake:2 B
gnd-00A-18 — 36.1_WCL_Ricon:3 A
gnd-00A-18 — 28.2_Destination_Signs:1 B
gnd-00A-18 — 26.1_Front_Lighting:1 B
gnd-00A-18 — 26.5_Fog_Dock_Lts:1 C
gnd-00A-18 — 26.1_Front_Lighting:1 C
gnd-00A-18 — 6.2_Network:4 C
gnd-00A-18 — 3.2_Ign_Start:1 A
gnd-00A-18 — 18.5_Roof_Hatches_W_Fan:2 B
gnd-00A-18 — 45.0_Emergency_Lights:1 C
gnd-00A-14
gnd-00A-18 — 16.2_ACB_LDW:3 B
gnd-00A-18 — 32.1_Kneeling:1 A
gnd-00A-18
gnd-00A-18 — 31.1_Mirror:1 A
gnd-00A-18 — 30.1_Drivers_Window:1 B
gnd-00FH4-12 — 7.1_Mux_Power:2 A
gnd-00FH2-10 — 7.1_Mux_Power:2 C
gnd-00FH3-10 — 7.1_Mux_Power:2 B
gnd-00FH3-16 — 7.1_Mux_Power:4 A
gnd-00FH3-18 — 42.4_ELD_ITS_Gateway:5 C

Right Hand Console

gnd-00RHC-8

Front harness

gnd-00FH1-14 — C42:35
gnd-00FH-18 — 34.1_wiper_washer:0 B
gnd-00FH1-14 — 18.1_Defroster:2 B

FJB harness

FJB Electronic GND

gnd-00F1-12
gnd-00F1-18 — 12.1_Brake:2 D
gnd-00F1-12 — 7.1_Mux_Power:1 D
gnd-00F3-12 — 7.1_Mux_Power:1 C
gnd-00F2-12 — 7.1_Mux_Power:1 D
gnd-00F2-18 — 17.1_Pre_Heat:1 C
gnd-00F2-16 — 7.1_Mux_Power:0 B
gnd-00F2-18 — 12.2_Trailler_ParkBrake:2 B
gnd-00F-18 — 12.2_Trailler_ParkBrake:2 B
gnd-00F-18 — 14.1_Engine_Ecu:5 D
gnd-00F-18 — 15.2_Trans_IShift:3 C
gnd-00F-18 — 15.2_Trans_IShift:1 D
gnd-00F-14 — 16.1_ESP:1 B
gnd-00F-18 — 30.2_OutletAndUSB_Pwr:1 B
gnd-00F-18 — 4.1_Dist_12V_FJB:2 C
gnd-00F-12
gnd-00F-18 — 28.1_Dig_Clock_&_B-Up_Cam:2 B
gnd-00F-16 — 9.1_Horn:3 C
gnd-00F-18 — 37.2_ZF_Assisted_Steering:1 B
gnd-00F-18 — 38.1_Fire_Supp:0 C
gnd-00F-18 — 4.1_Dist_12V_FJB:4 A
gnd-00F-18 — 4.1_Dist_12V_FJB:4 B
gnd-00F-18 — 9.1_Horn:1 B
gnd-00FH4-12 — 7.1_Mux_Power:1 E

RJB harness

RJB Electronic GND

gnd-00FR-2/0

gnd-00R1-18 — 3.2_Ign_Start:1 C
gnd-00R1-18 — 3.1_Main_Disti:1 A
gnd-00R1-18 — 6.2_Network:1 B
gnd-00R1-18 — 11.1_Lavatory:1 B
gnd-00R1-14 — 15.2_Trans_IShift:2 A
gnd-00R1-14 — 15.1_Trans_Allison:0 A
gnd-00R1-14 — 17.1_Pre_Heat:3 E
gnd-00R1-16 — 38.1_Fire_Supp:2 C
gnd-00R1-18 — 12.1_Brake:2 C
gnd-00R1-18 — 14.1_Engine_Ecu:3 B
gnd-00R1-10
gnd-00R1-18 — 1.2_Batteries:3 E
gnd-00R2-8 — 7.1_Mux_Power:2 D
gnd-00R2-12 — C17:2
gnd-00R2-12 — 7.1_Mux_Power:2 C
gnd-00R3-12 — 7.1_Mux_Power:4 C
gnd-00R4-12 — 7.1_Mux_Power:4 D
gnd-00R4-12 — 7.1_Mux_Power:4 D
gnd-00R4-16 — 7.1_Mux_Power:4 B
C17:92
gnd-00R5-14 — 7.1_Mux_Power:4 E
gnd-00R5-14 — 14.2_Urea:1 B
gnd-00R5-8
gnd-00R5-12 — 14.1_Engine_Ecu:3 C
gnd-00R5-18 — 26.4_Trailer:1 D
gnd-00R5-18 — 40.1_Inverters_Charger:5 C
gnd-00VA-2 — 1.1_batteries:0 C
gnd-_00-1/0 — 1.1_batteries:3 C

Dash JB

AE55 (I/O_EA, 24WUP)
gnd-A55RJ1.6-18 — 31.2_ElectronicMirror:3 E
gnd-A55RJ1.18-18 — 16.2_ACB_LDW:4 C
26.1_Front_Lighting:5 A

AE56 (I/O_EA, 24WUP)

FJB

AE41 (I/O_EA, 24WUP)
gnd-A41RJ1.18-18 — 25.1_Cmpt_Lighting:1 E

AE42 (I/O_EA, 24WUP)
C110:13
gnd-A42RJ1.18-18 — 32.1_Kneeling:4 B, 32.1_Kneeling:1 E, 32.1_Kneeling:4 D
gnd-A42RJ2.14-18 — 32.1_Kneeling:1 B

AE43 (I/O_EB, 12WUP)
gnd-A43RJ1.17-18 — 39.1_TPMS:0 B, 16.2_ACB_LDW:2 D
gnd-A43RJ1.18-18 — 33.1_Luggage_LockUnlock:4 C
gnd-A43RJ2.2-18 — 37.1_VLink_ADryer:2 D

AE44 (I/O_EB, 24WUP)
gnd-A44RJ1.5-16 — 20.1_Aislelights:4 D
gnd-A44RJ1.17-18 — 26.1_Front_Lighting:5 E, 9.1_Horn:3 D
gnd-A44RJ2.2-18 — 19.1_Driver_Lights:3 A, 29.1_Entrance_door:5 D
gnd-A44RJ2.3-18 — 34.1_wiper_washer:4 B

AE45 (I/O_EB, 24WUP)
gnd-A45RJ1.17-18 — 25.1_Cmpt_Lighting:2 C
gnd-A45RJ1.18-18 — 32.1_Kneeling:4 E
gnd-A45RJ2.2-18 — 4.2_Dist_24V_FJB:3 E

AE46 (I/O_EB, 24WUp)
gnd-A46RJ1.6-14 — 21.1_SignatureLedStrip_Ligh

RH console JB

AE47 (I/O_EB, 24WUP)
gnd-A47RJ1.17-16 — 26.1_Front_Lighting:4 D
gnd-A47RJ2.2-14 — 26.5_Fog_Dock_Lts:3 B

AE48 (I/O_EB, 24WUp)
gnd-A48RJ1.6-18 — 18.1_Defroster:1 E, 18.1_Defroster:1 D
gnd-A48RJ1.17-18 — 18.1_Defroster:3 D
gnd-A48RJ1.18-18 — 29.1_Entrance_door:1 C
gnd-A48RJ2.2-18 — 29.1_Entrance_door:5 C
gnd-A48RJ2.3-18 — 29.2_EntranceStep_Lights:3 E
gnd-A48RJ2.14-18 — 18.1_Defroster:2 C
gnd-A48RJ2.14-18 — 29.1_Entrance_door:5 D

AE49 (I/O_EB, 24WUP)
gnd-A49RJ1.17-14 — 26.5_Fog_Dock_Lts:3 C
gnd-A49RJ2.2-16 — 26.1_Front_Lighting:4 B

Parcel Rack JB

AE58 (I/O_EB, 24WUp)
gnd-A58RJ1.5-18 — 26.6_Curb_Lights:3 C
gnd-A58RJ1.5-18 — 26.6_Curb_Lights:3 B
gnd-A58RJ1.6-16 — 18.5_Roof_Hatches_W_Fan:4 D
gnd-A58RJ1.17-16 — 11.1_Lavatory:4 B
gnd-A58RJ1.18-18 — 23.1_Indirect_Lights:1 E
gnd-A58RJ2.3-14 — 22.1_Reading_lamps:8 D
gnd-A58RJ2.14-12 — 18.3_Parcel_Rack_Vent:2 C

Evaporator

AE54 (I/O_EB, 24WUp)
gnd-A54RJ1.6-18 — 18.2_HvacPass:0 D
gnd-A54RJ1.17-16 — 18.2_HvacPass:0 C
gnd-A54RJ1.18-14 — 18.2_HvacPass:4 B
18.3_Parcel_Rack_Vent:3 E
18.2_HvacPass:1 A
gnd-A54RJ2.2-16 — 25.1_Cmpt_Lighting:1 A
18.2_HvacPass:5 D
gnd-A54RJ2.3-16 — 18.2_HvacPass:3 C

WCL

AE57 (I/O_EA, 24WUp)
gnd-A57RJ1.18-18 — 36.1_WCL_Ricon:2 B

RJB

AE50 (I/O_EB, 24WUP)
gnd-A50RJ2.2-18 — 13.1_FanDriveElectric:1 D

AE51 (I/O_EB, 12WUp)
gnd-A51RJ1.5-18 — 26.1_Front_Lighting:4 D
gnd-A51RJ1.6-18 — 32.1_Kneeling:1 E
gnd-A51RJ1.17-18 — 26.2_Rear_lighting:1 F
gnd-A51RJ1.18-18 — 26.2_Rear_lighting:1 B
gnd-A51RJ2.2-18 — 26.3_Backup_Warnings:2 B

AE52 (I/O_EB, 12Wup)
gnd-A52RJ1.17-18 — 26.2_Rear_lighting:2 D
gnd-A52RJ1.18-16 — 36.1_WCL_Ricon:6 A

AE53 (I/O_EB, 24WUp)
gnd-A53RJ1.17-16 — 11.1_Lavatory:3 E
gnd-A53RJ1.18-18 — 25.1_Cmpt_Lighting:4 B

Ground distribution:
0-Electric gnd
00- Electronic Gnd
A-Dash - Lh console harness
F-Front junction box harness
FH-Front harness
FCH-Front clearance harness
R-Rear junction box harness
FR-Front to rear

Chassis ground distribution

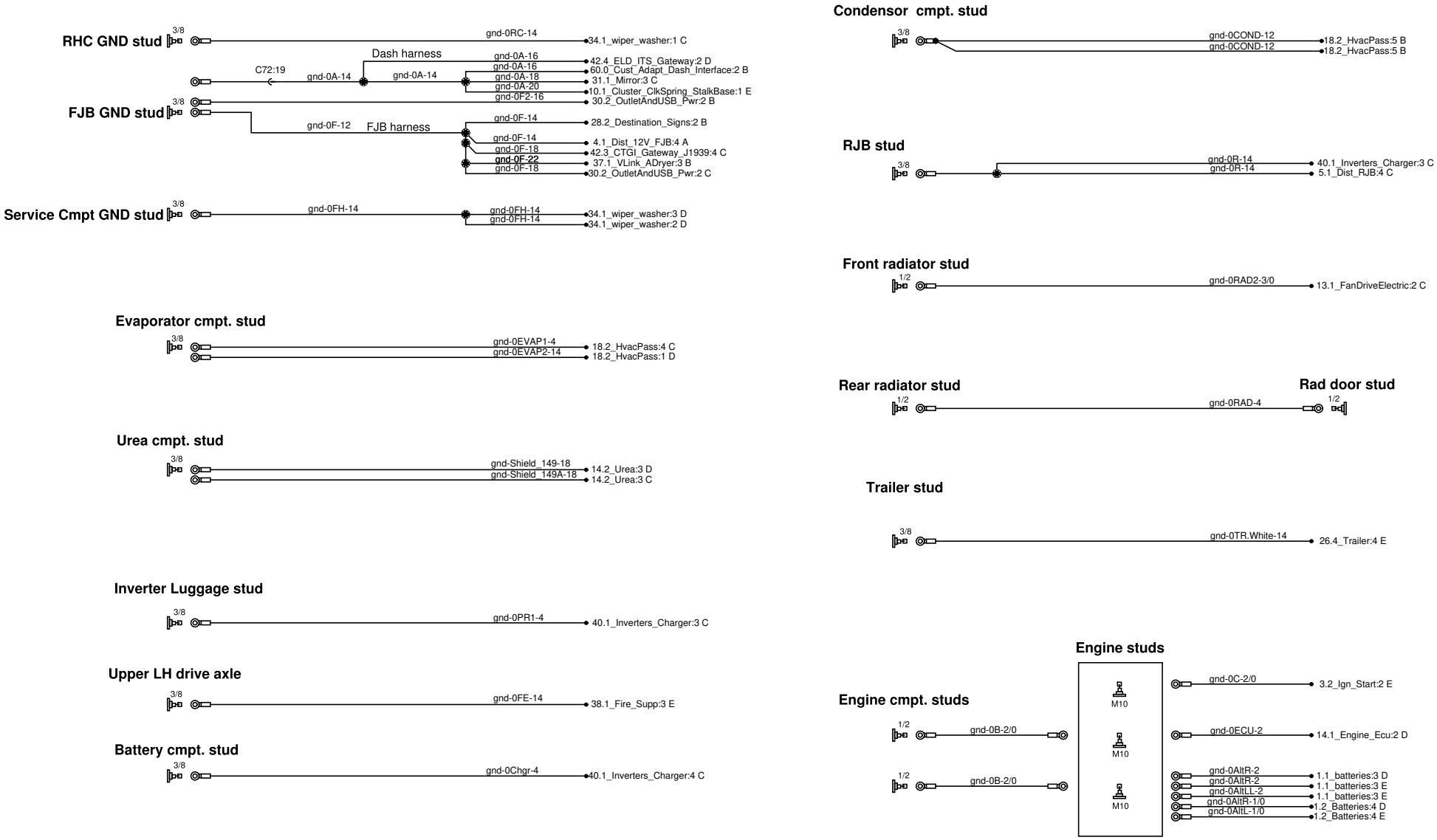

Main distribution batteries & ignition

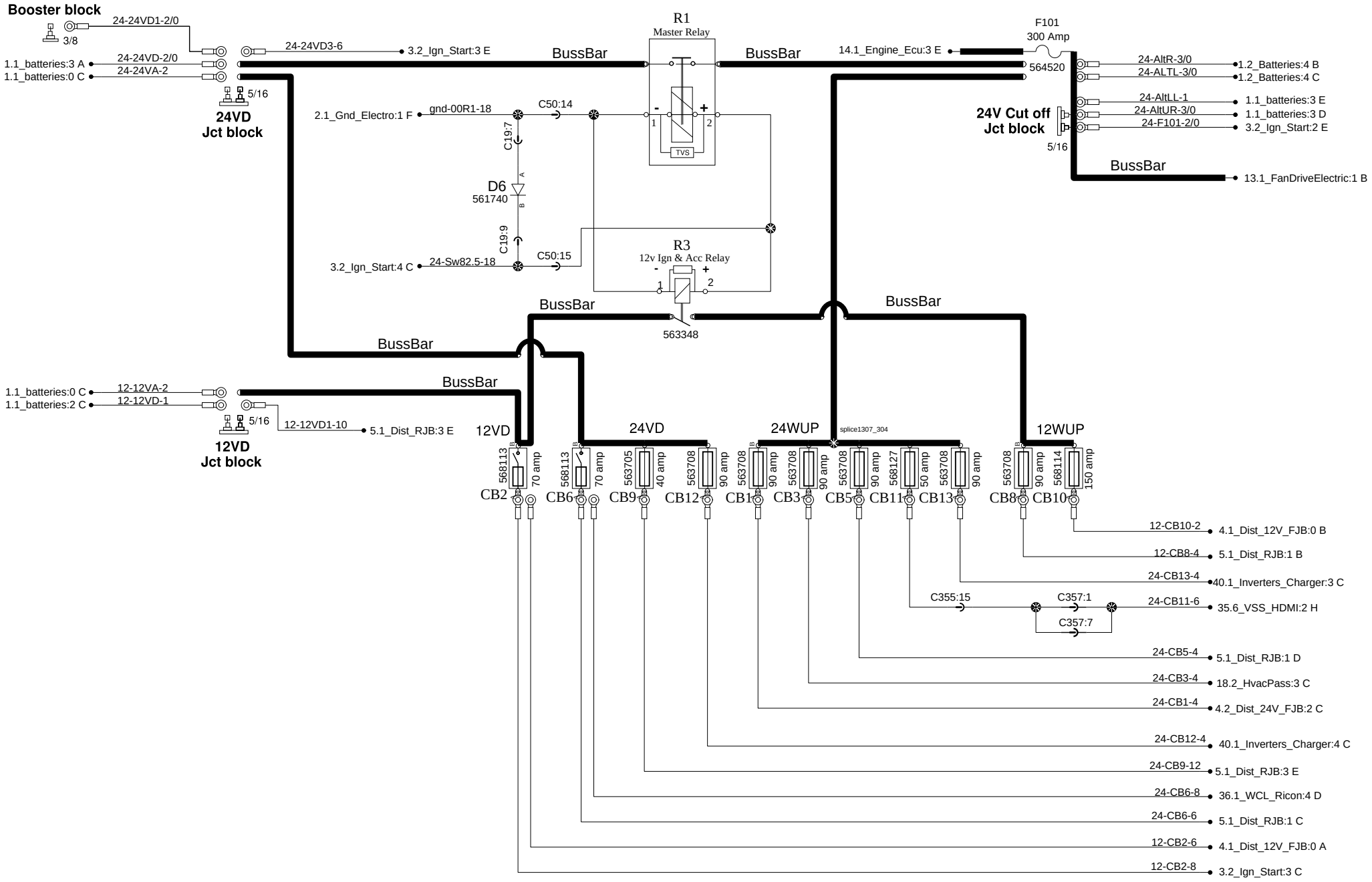

PREVOST®	WIRING DIAGRAM	No:D062140	Page:3.1	Rev:0

Main distribution batteries & ignition

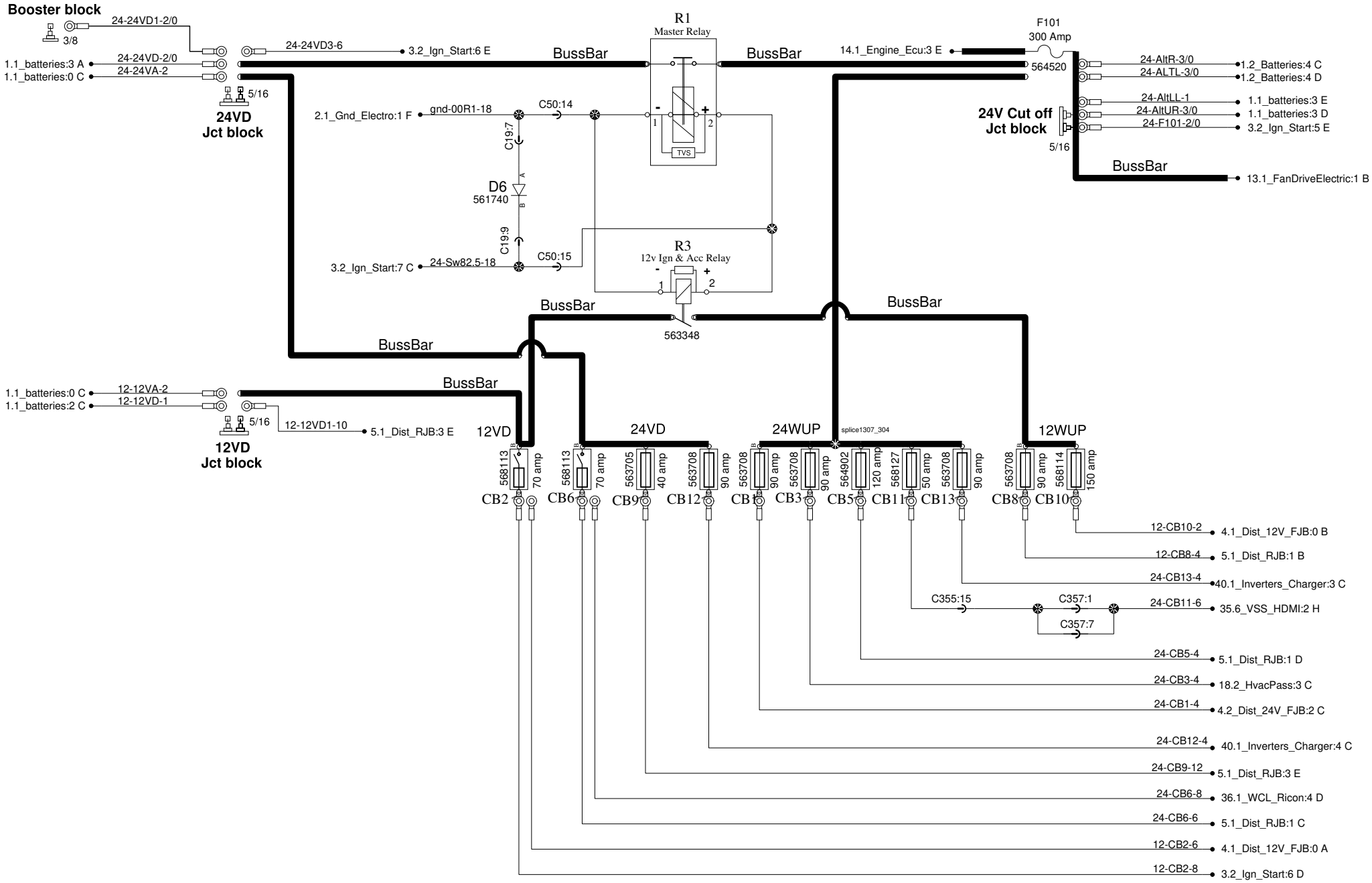

PREVOST®	WIRING DIAGRAM	No:D062140	Page:3.1	Rev:6

Main distribution batteries & ignition

Cutomer Adaptation

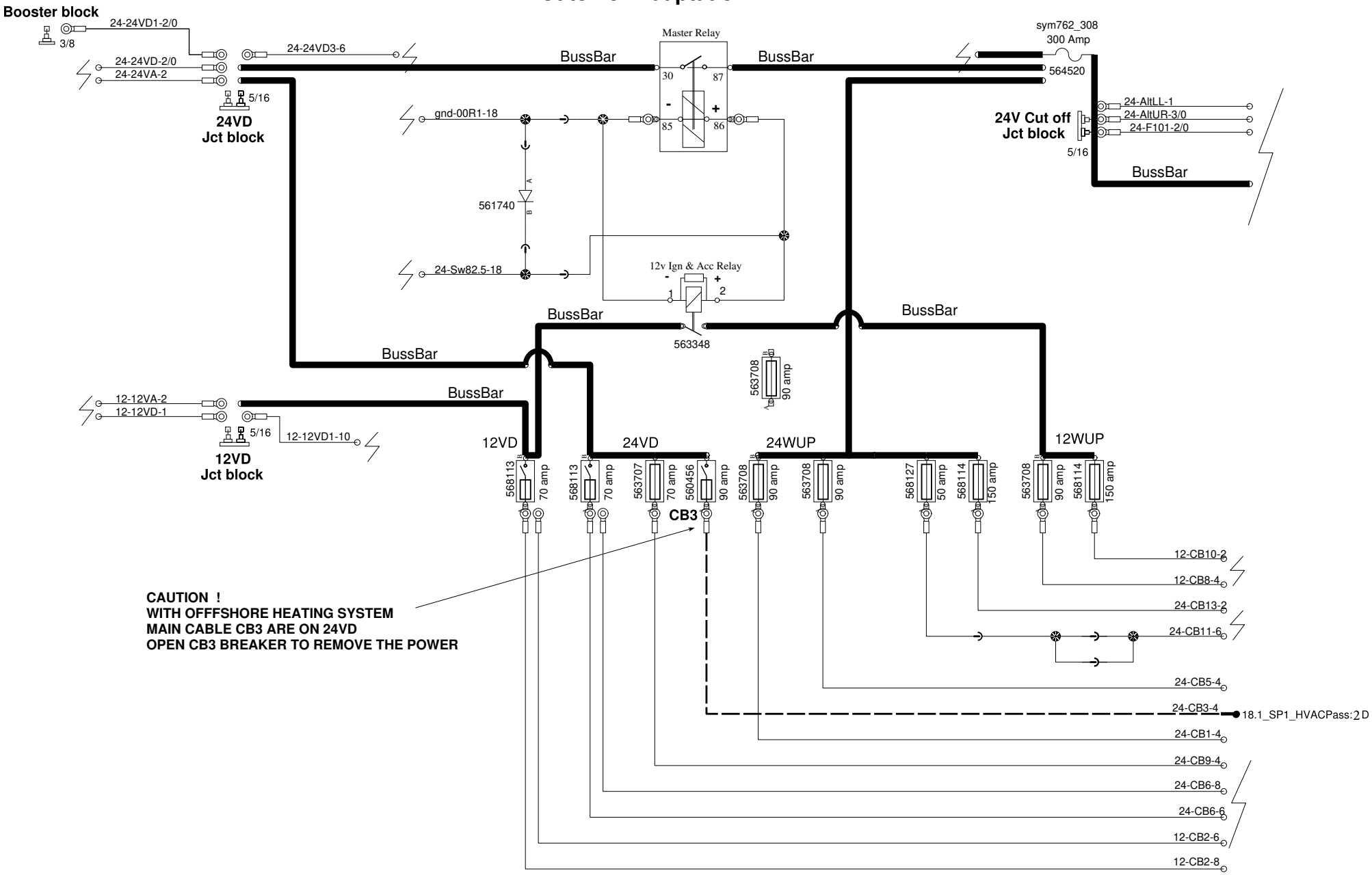

PREVOST®	WIRING DIAGRAM	No:D062140	Page:3.1 SP1	Rev:00

Ignition and engine start

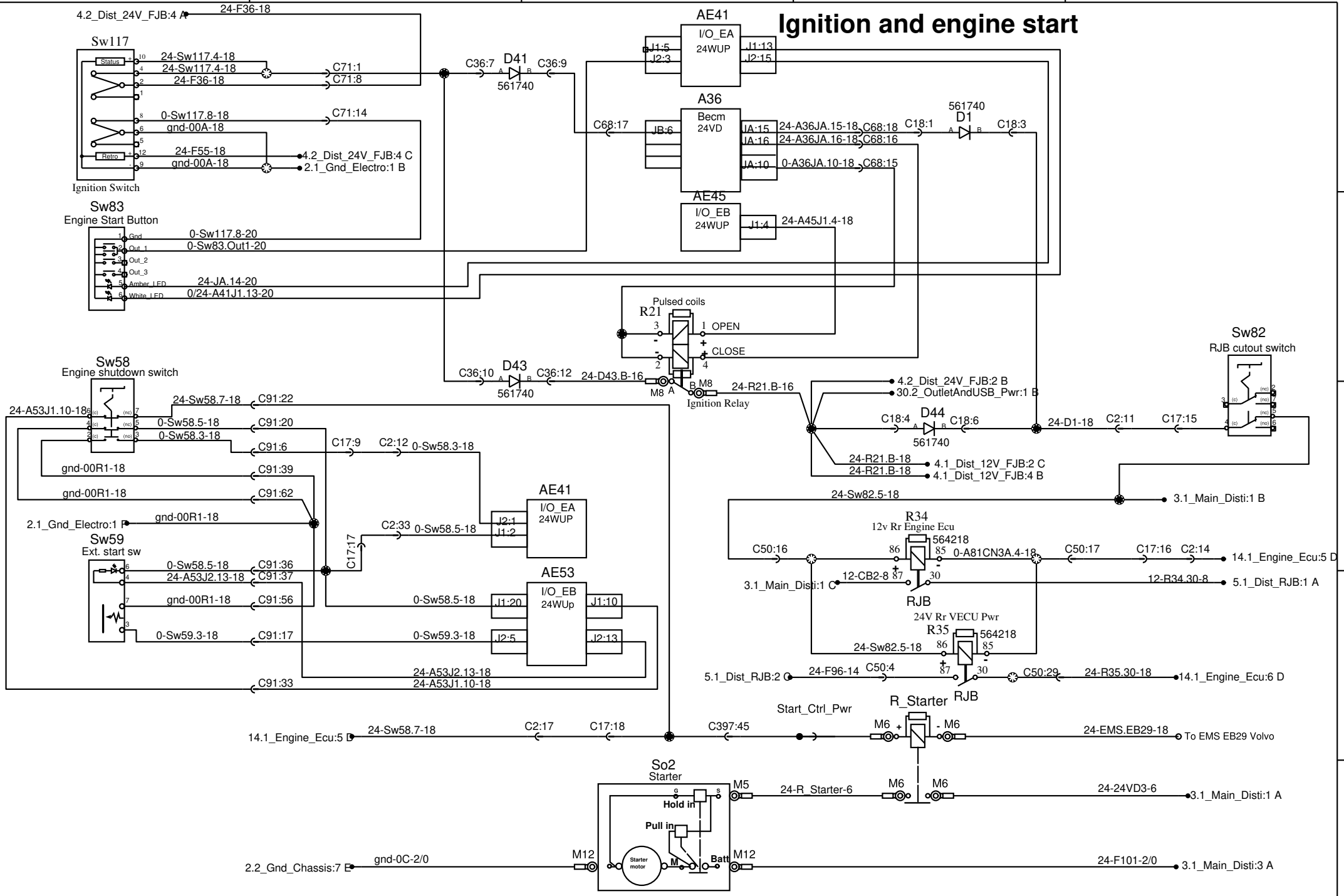

PREVOST®	WIRING DIAGRAM	No:D062140	Page:3.2	Rev:3

12V Power distribution front junction box

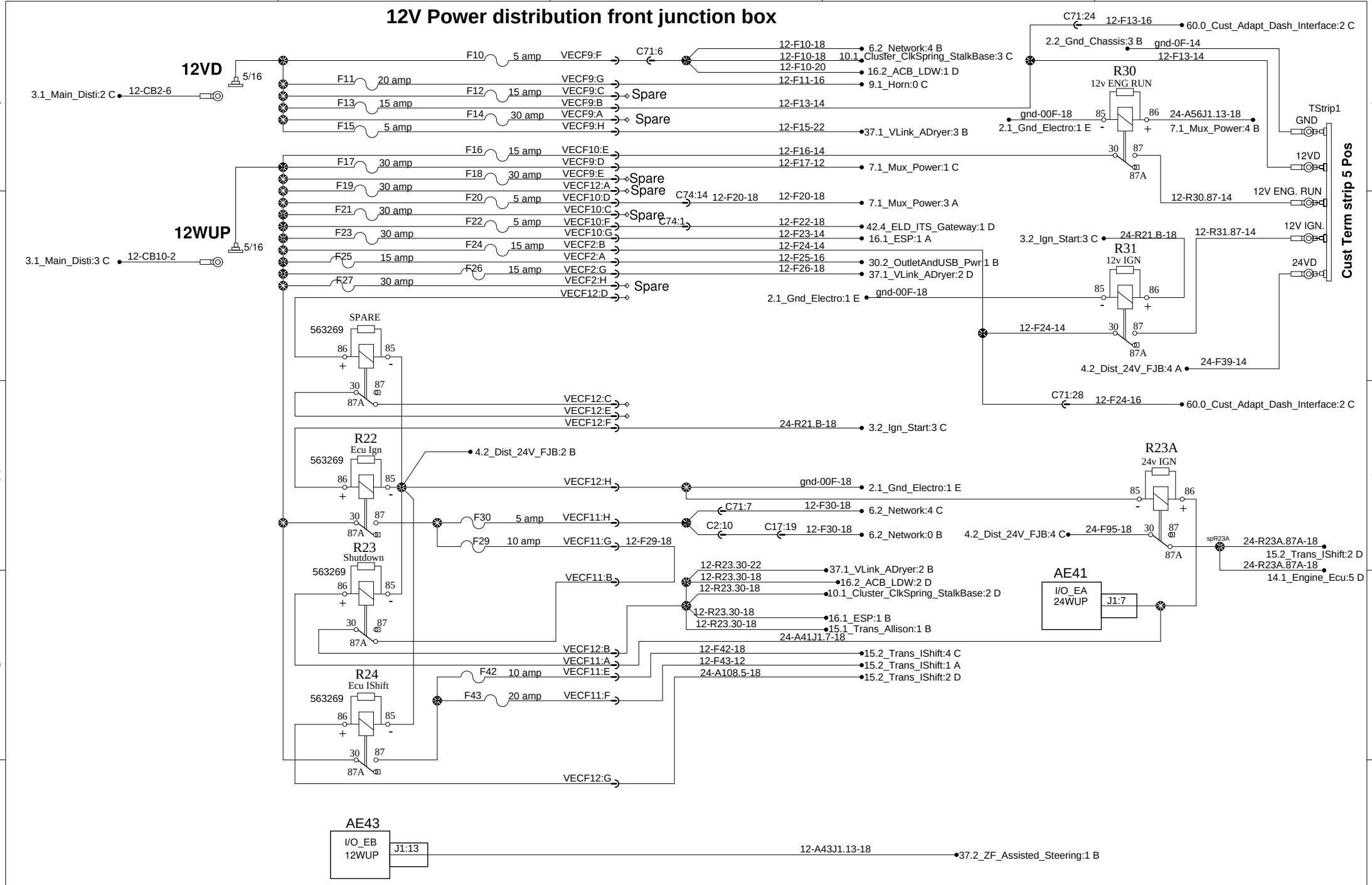

PREVOST®	WIRING DIAGRAM	No:D062140	Page:4.1	Rev:00

24V Power distribution front junction box

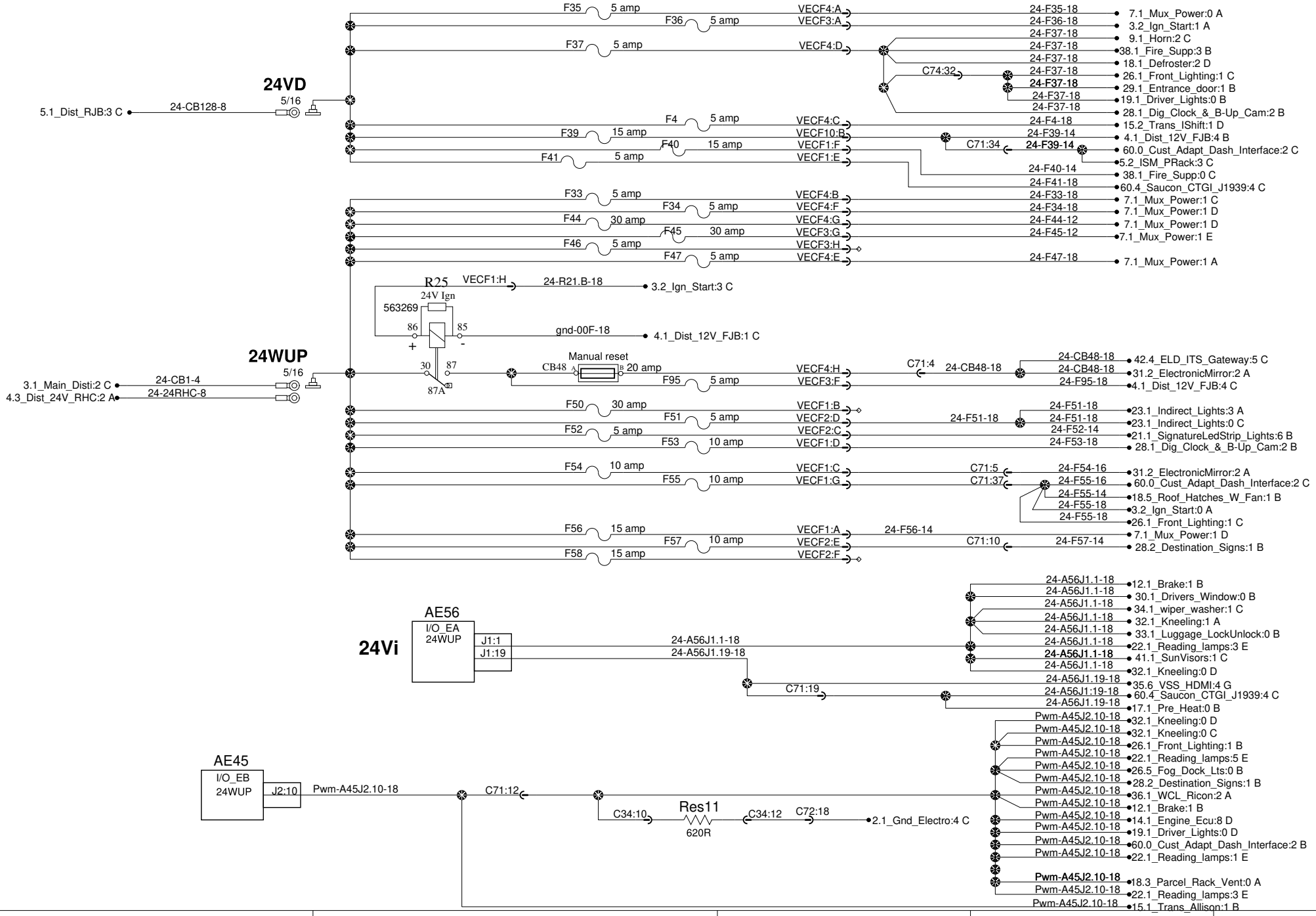

PREVOST®	WIRING DIAGRAM	No:D062140	Page:4.2	Rev:5

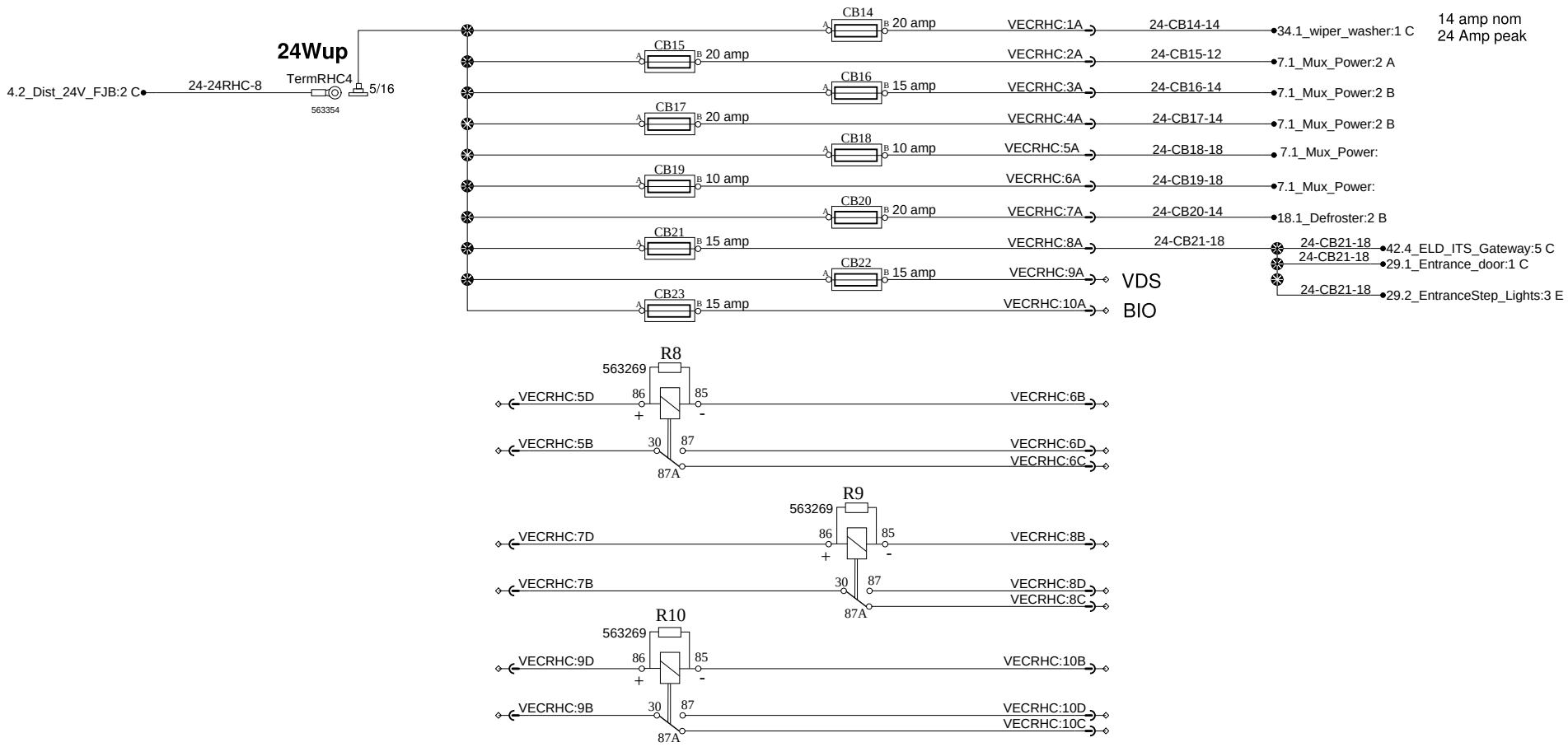

PREVOST®	WIRING DIAGRAM	No:D062140	Page:4.3	Rev:0

Power distribution rear junction box

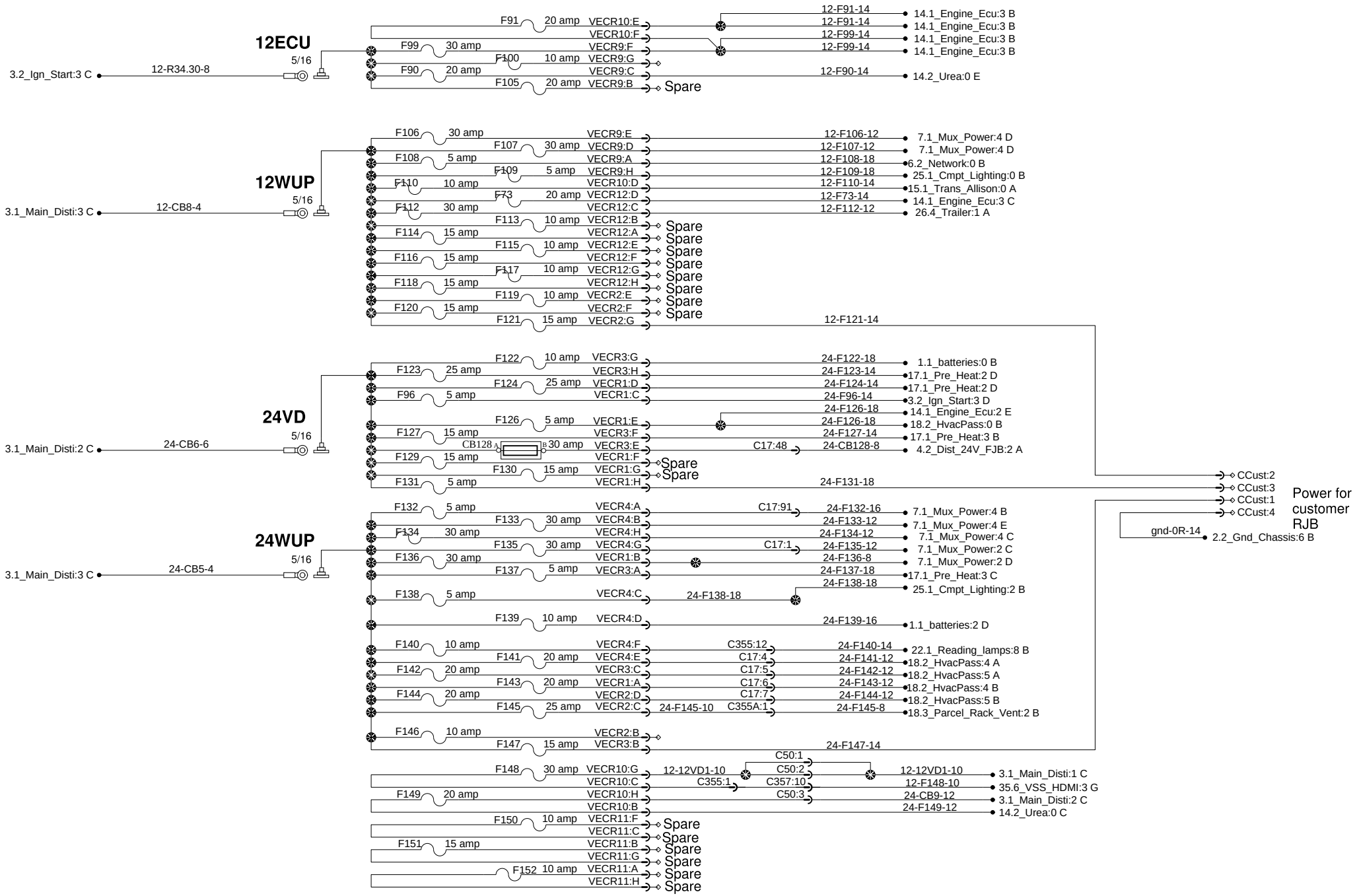

PREVOST®	WIRING DIAGRAM	No:D062140	Page:5.1	Rev:0

Power distribution rear junction box

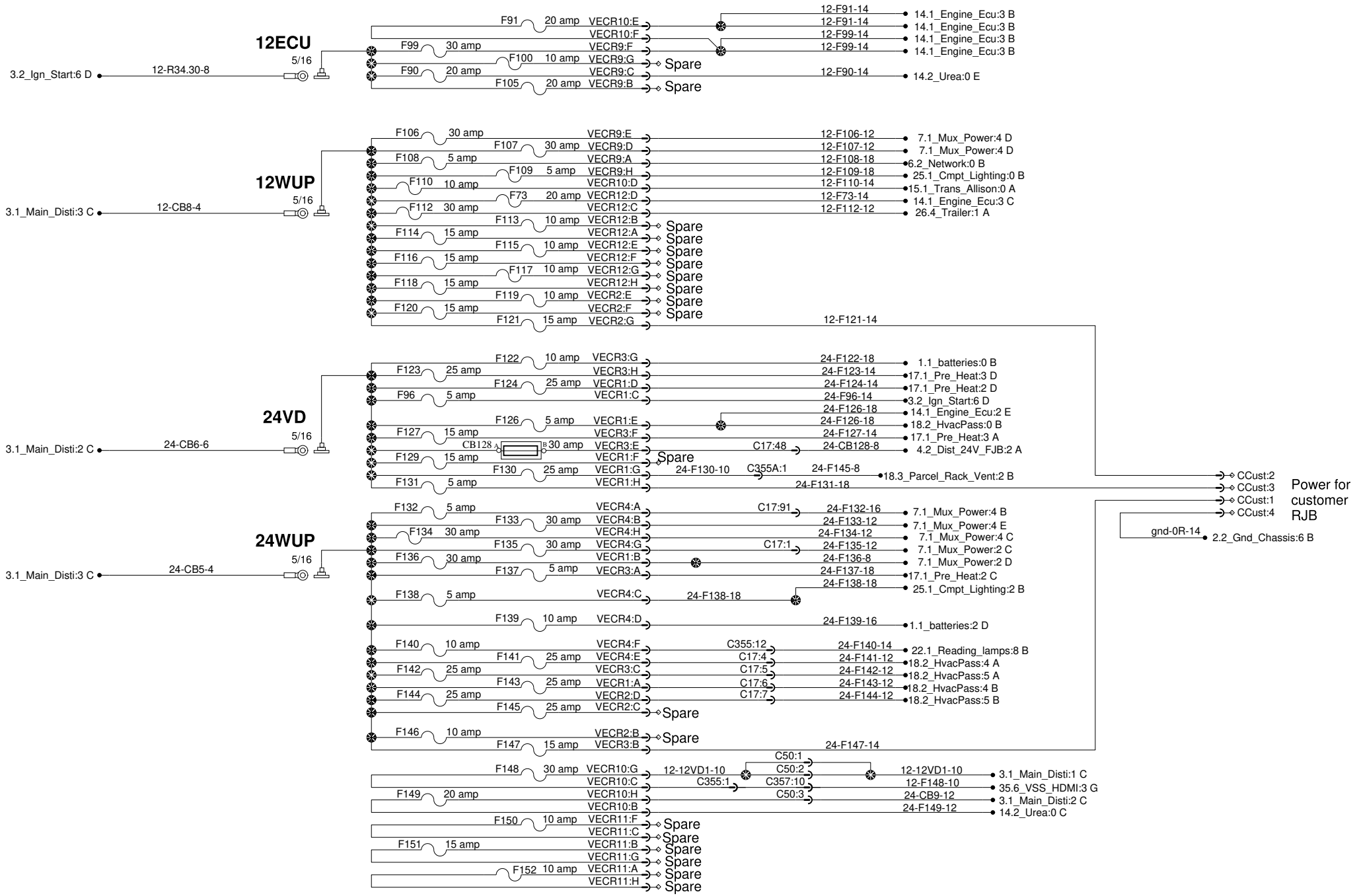

PREVOST®	WIRING DIAGRAM	No:D062140	Page:5.1	Rev:6

ISM Parcel Rack

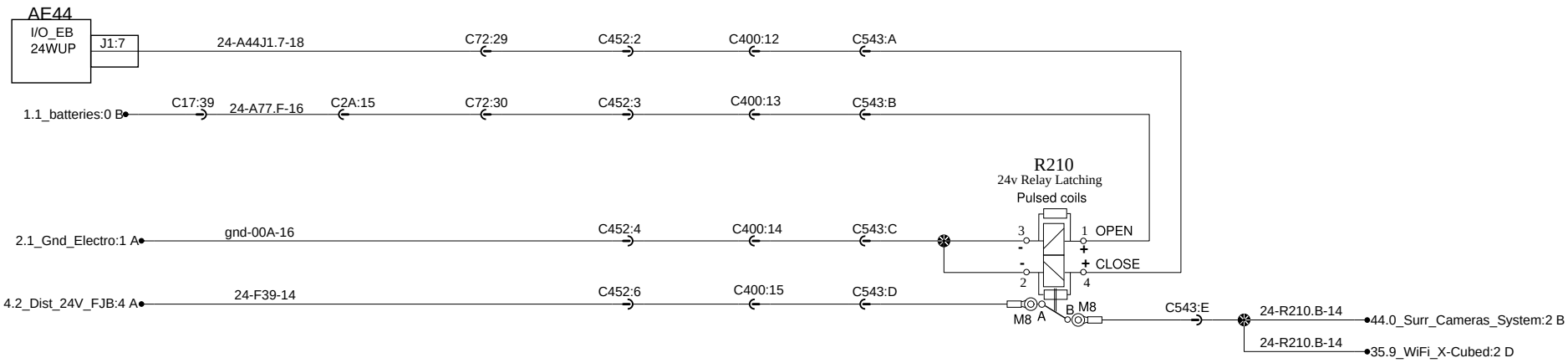

PREVOST®	WIRING DIAGRAM	No:D062140	Page:5.2	Rev:0

ISM PARCEL RACK WITH TIMER

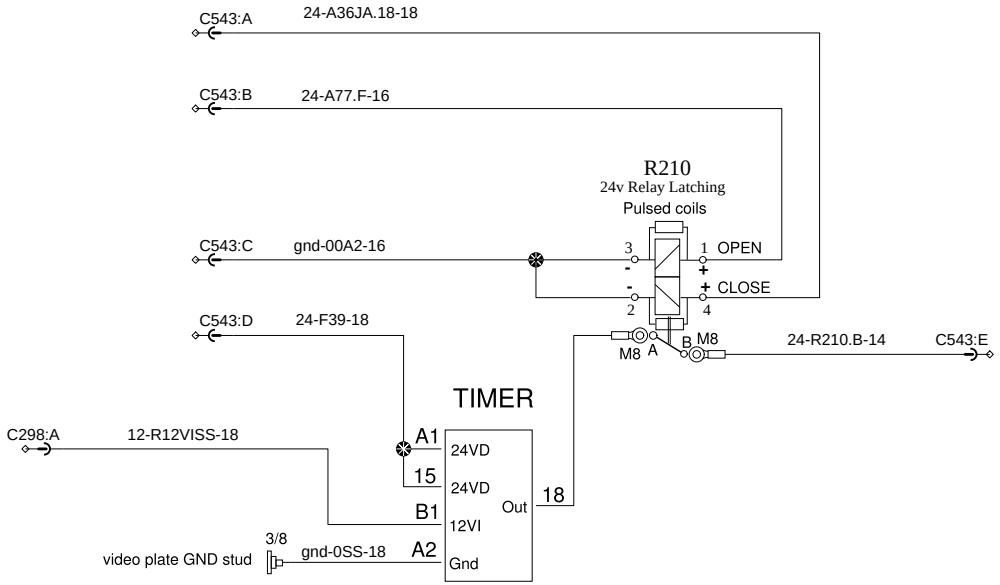

PREVOST®	WIRING DIAGRAM	No: D062140	Page:5.2 SP1	Rev:01

Multiplex Can, J1587, 1939 network and addressing

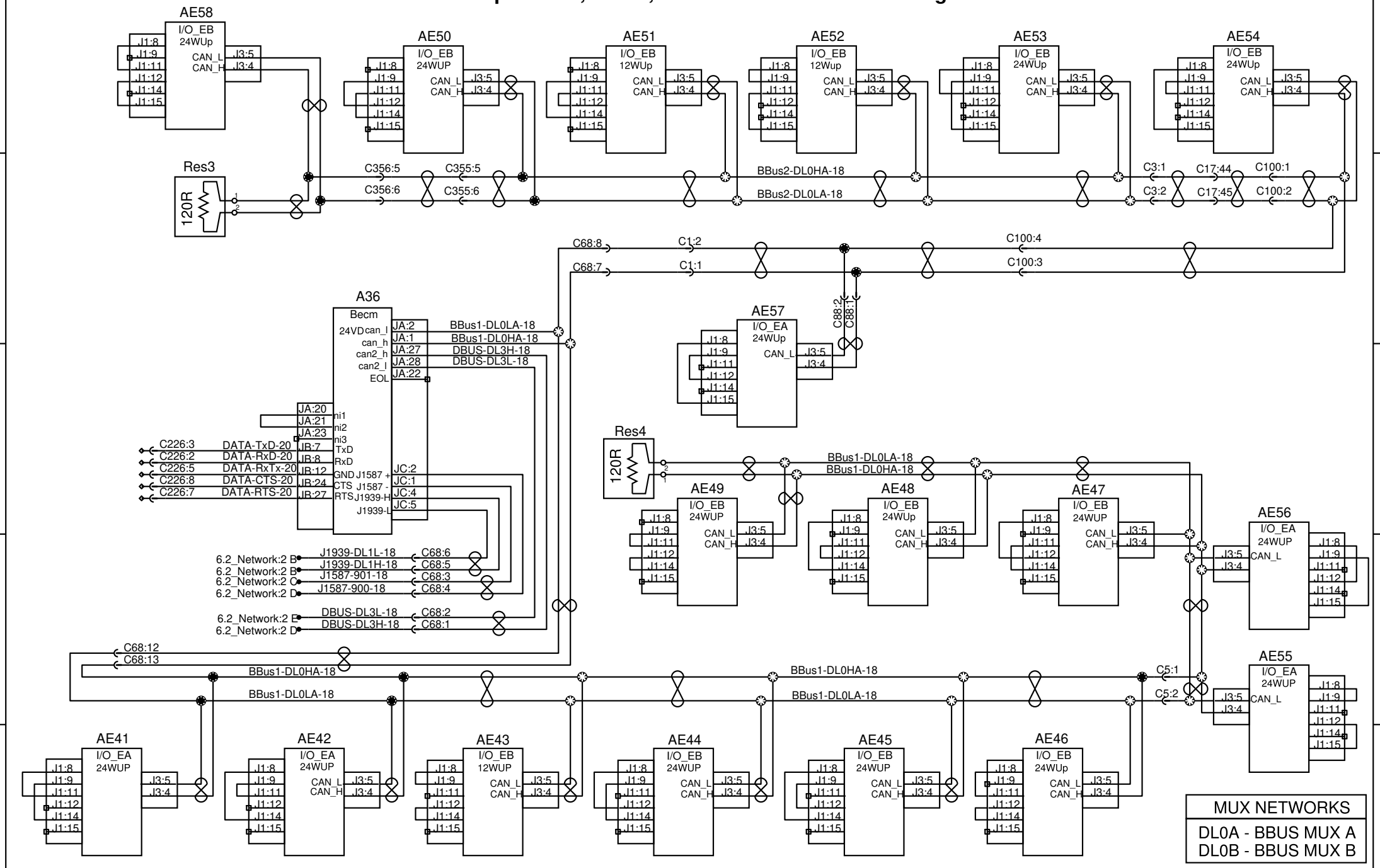

PREVOST®

WIRING DIAGRAM

No:D062140

Page:6.1

Rev:3

J1939, Can Iso J2284, J1587 and DBUS

Open C194 and connect C194spA and C194spB to connect Vansco gateway.

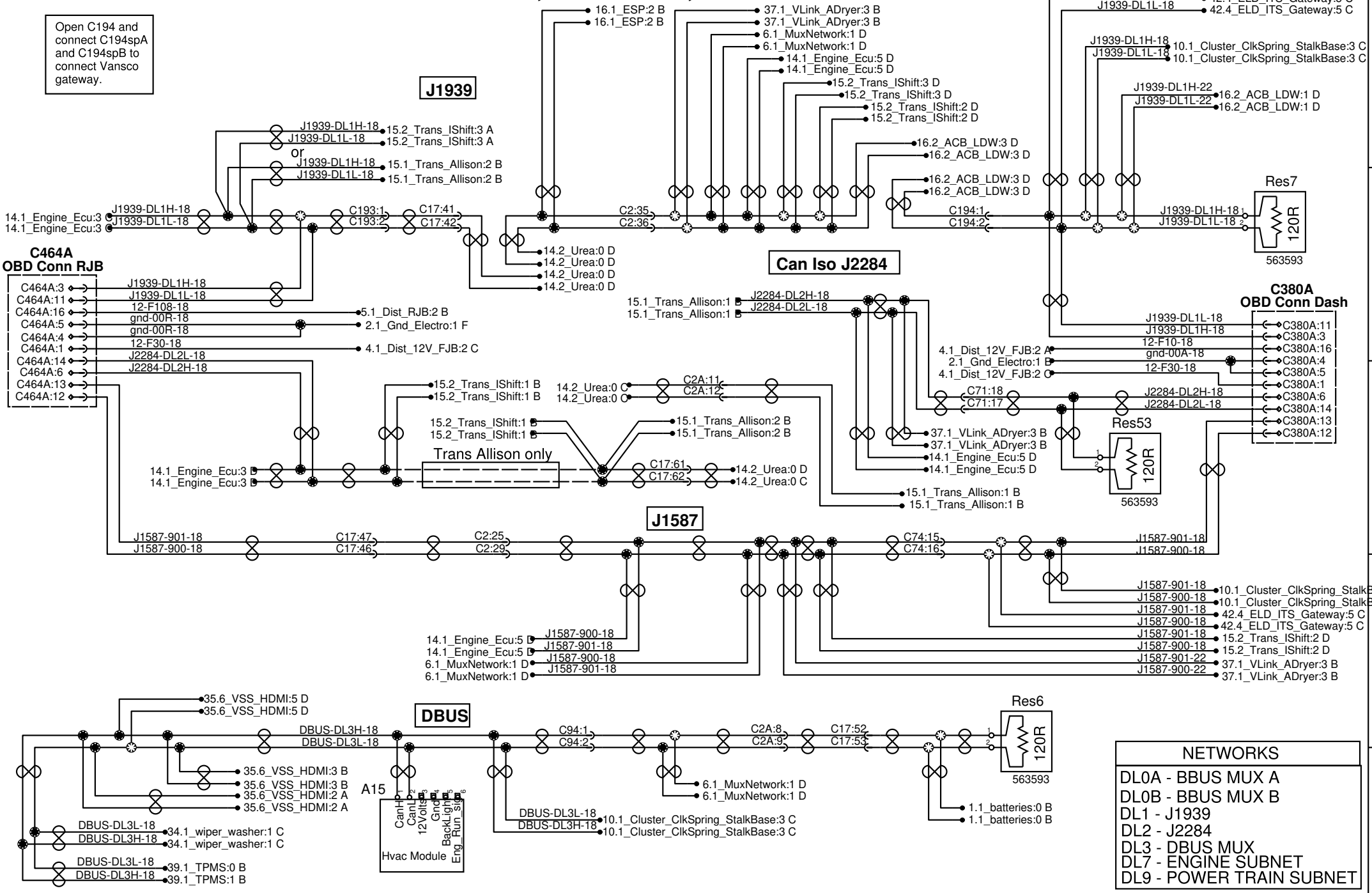

NETWORKS
DL0A - BBUS MUX A
DL0B - BBUS MUX B
DL1 - J1939
DL2 - J2284
DL3 - DBUS MUX
DL7 - ENGINE SUBNET
DL9 - POWER TRAIN SUBNET

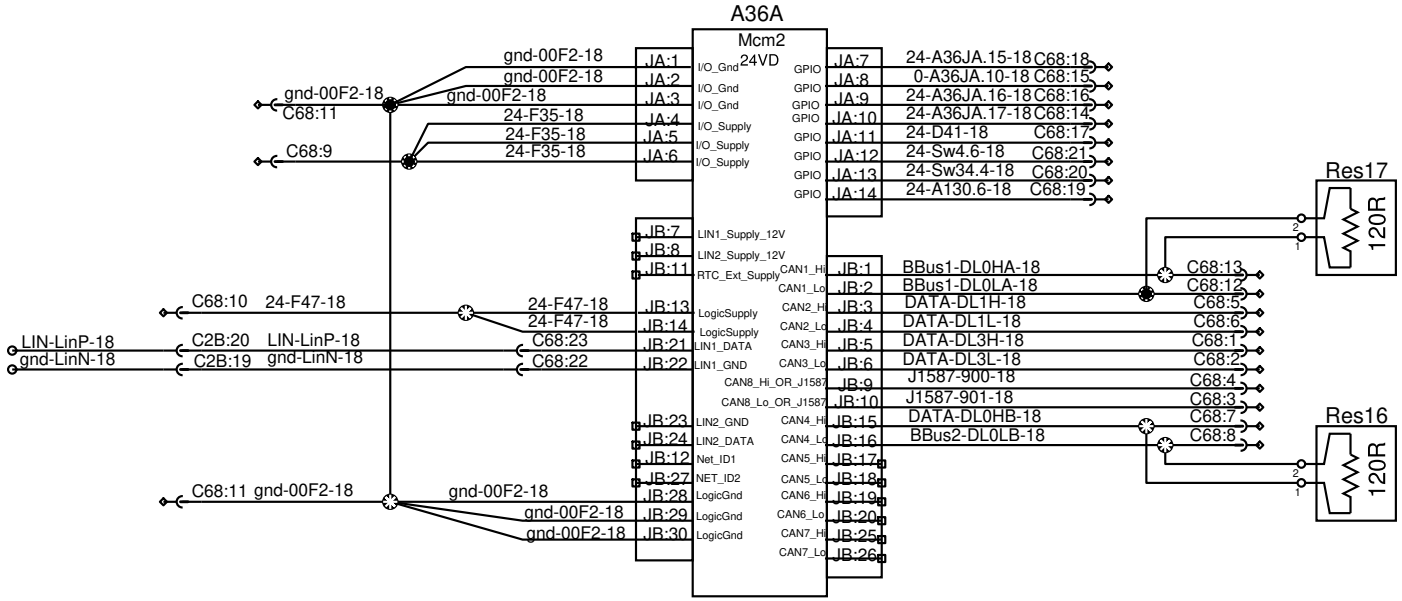

PREVOST®	WIRING DIAGRAM	No:D062140	Page:6.3	Rev:3

Multiplex power supply distribution

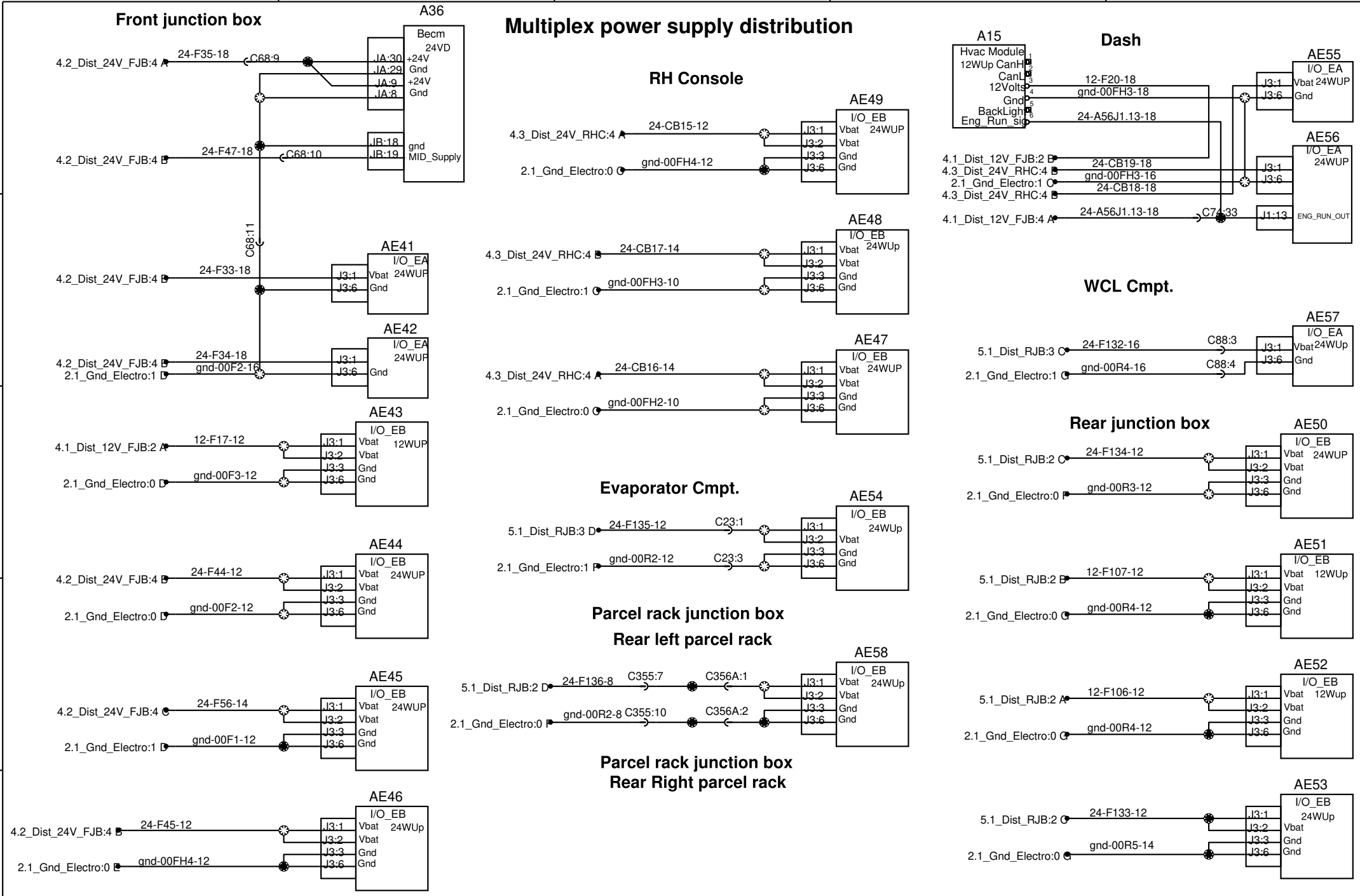

PREVOST®	WIRING DIAGRAM	No:D062140	Page:7.1	Rev:3

Spares wires

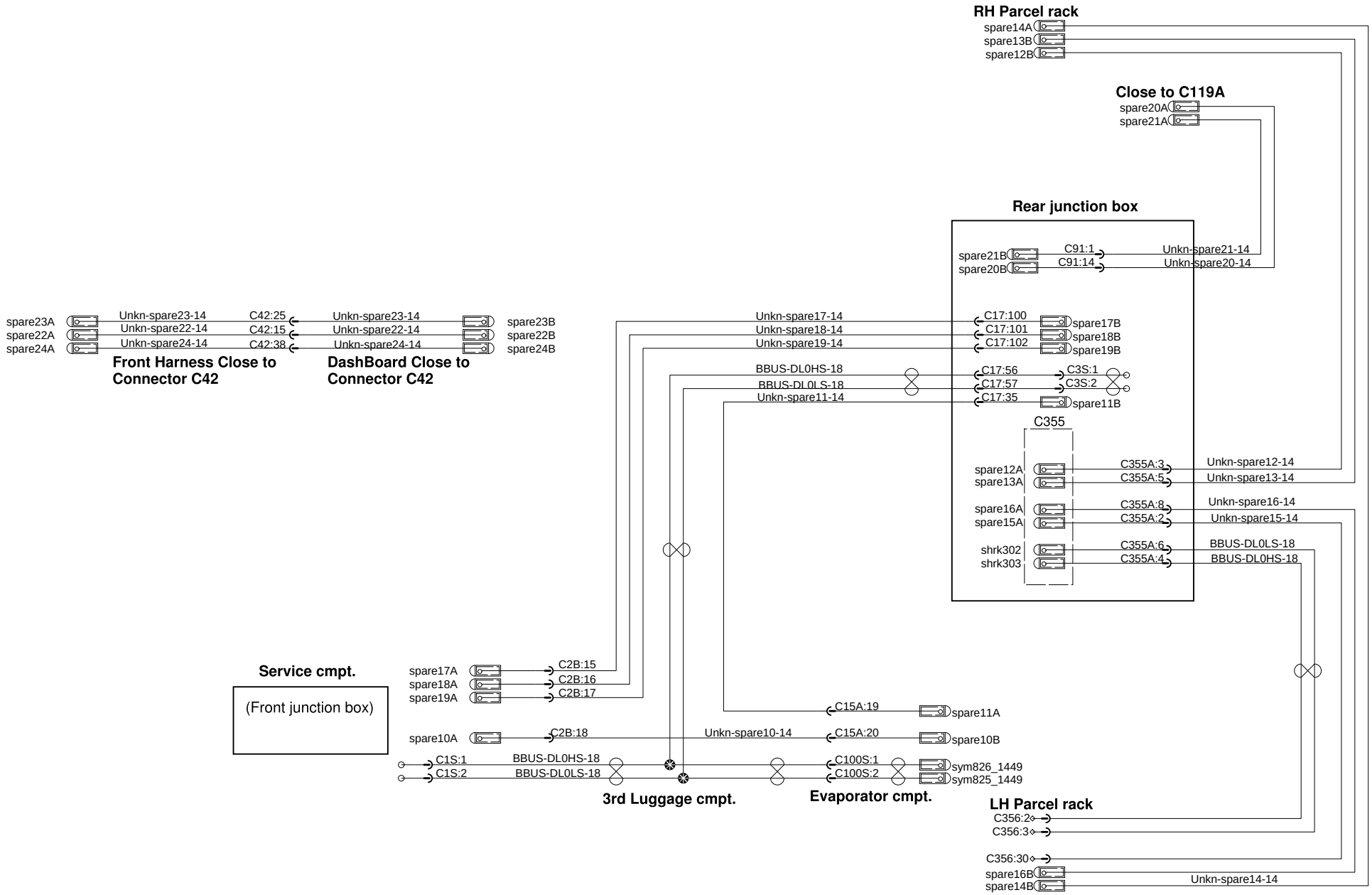

Spares wires

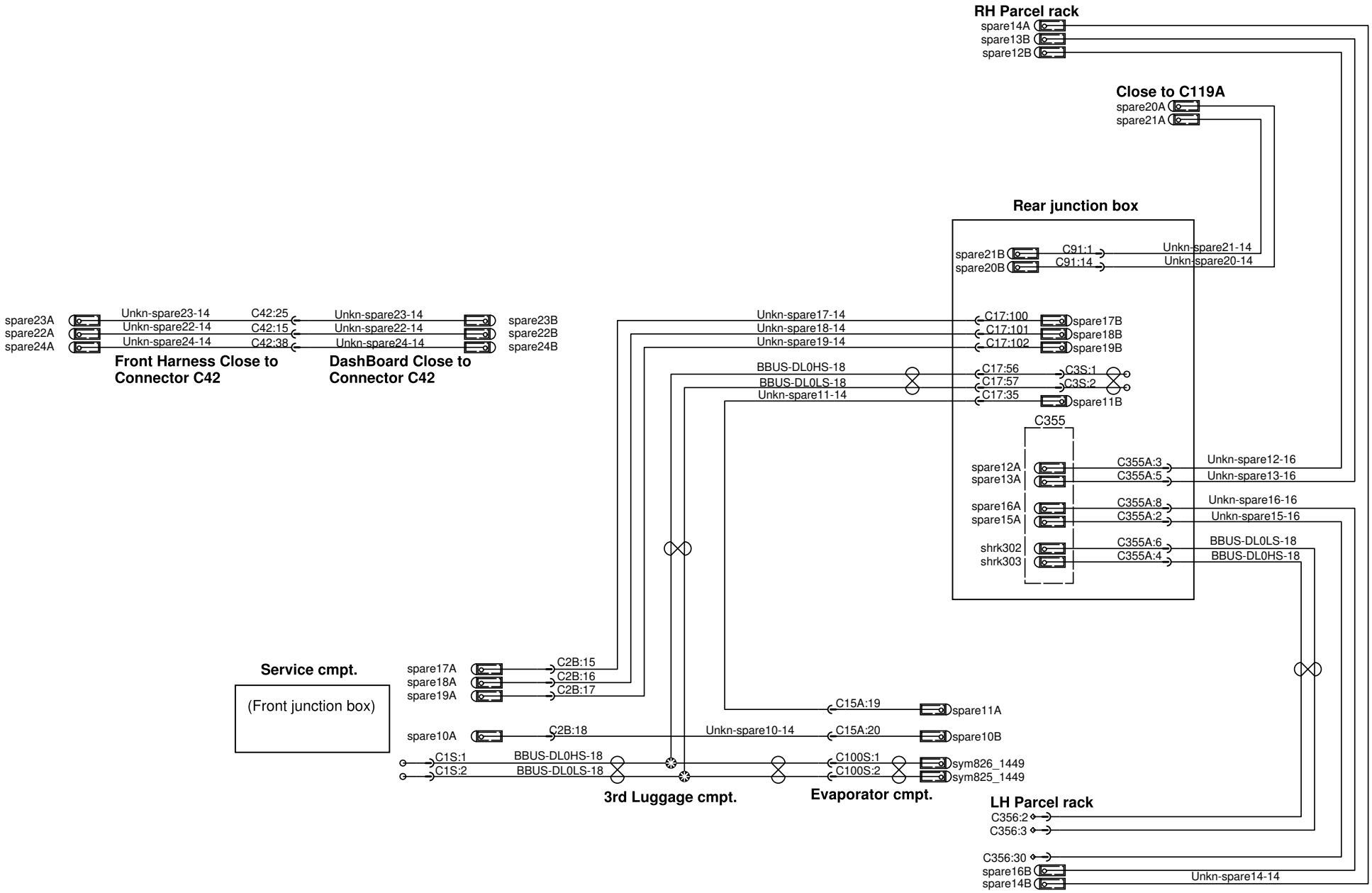

Horn

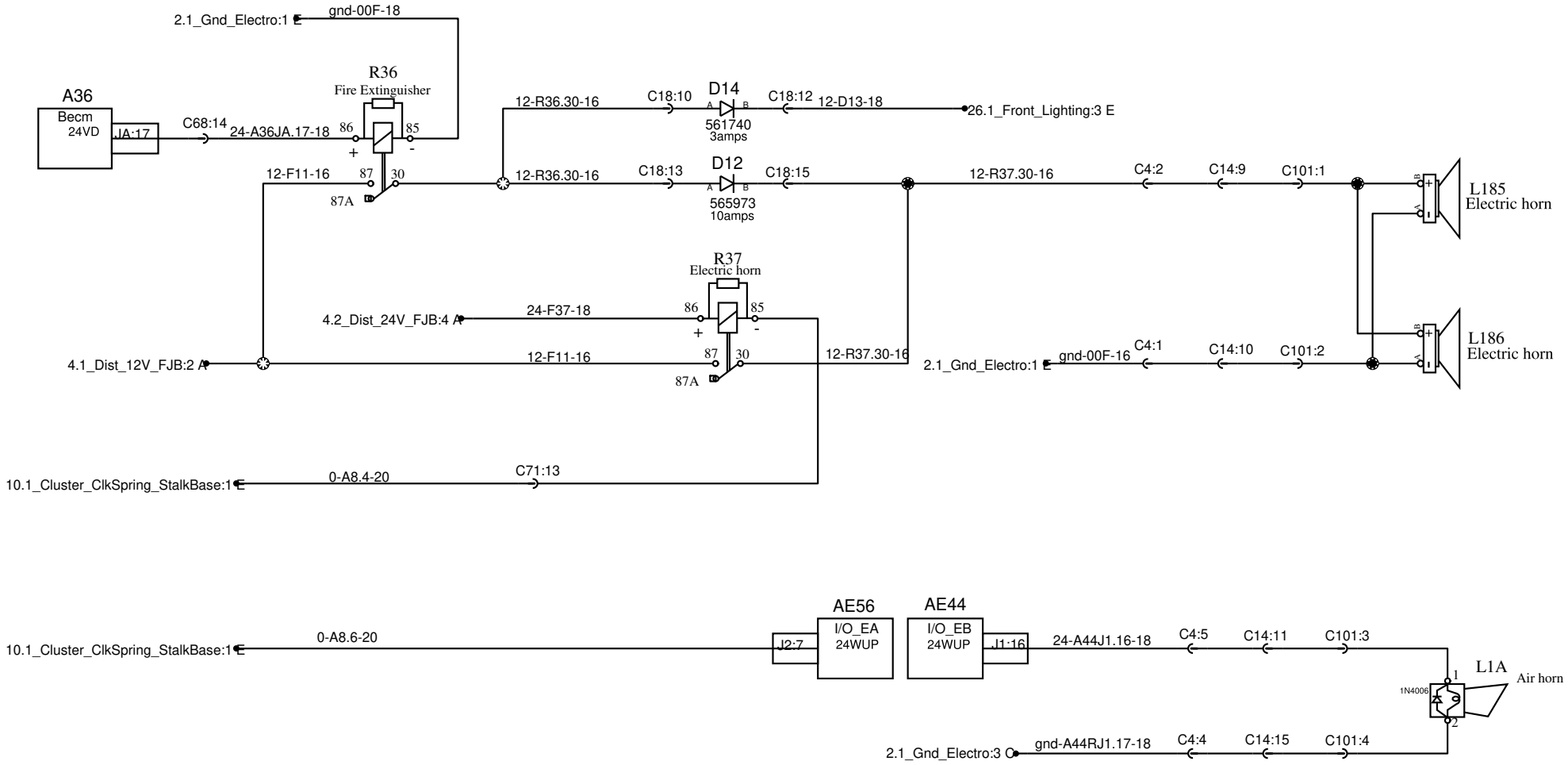

PREVOST®	WIRING DIAGRAM	No:D062140	Page:9.1	Rev:3

Cluster, Stalk Arm and SWS

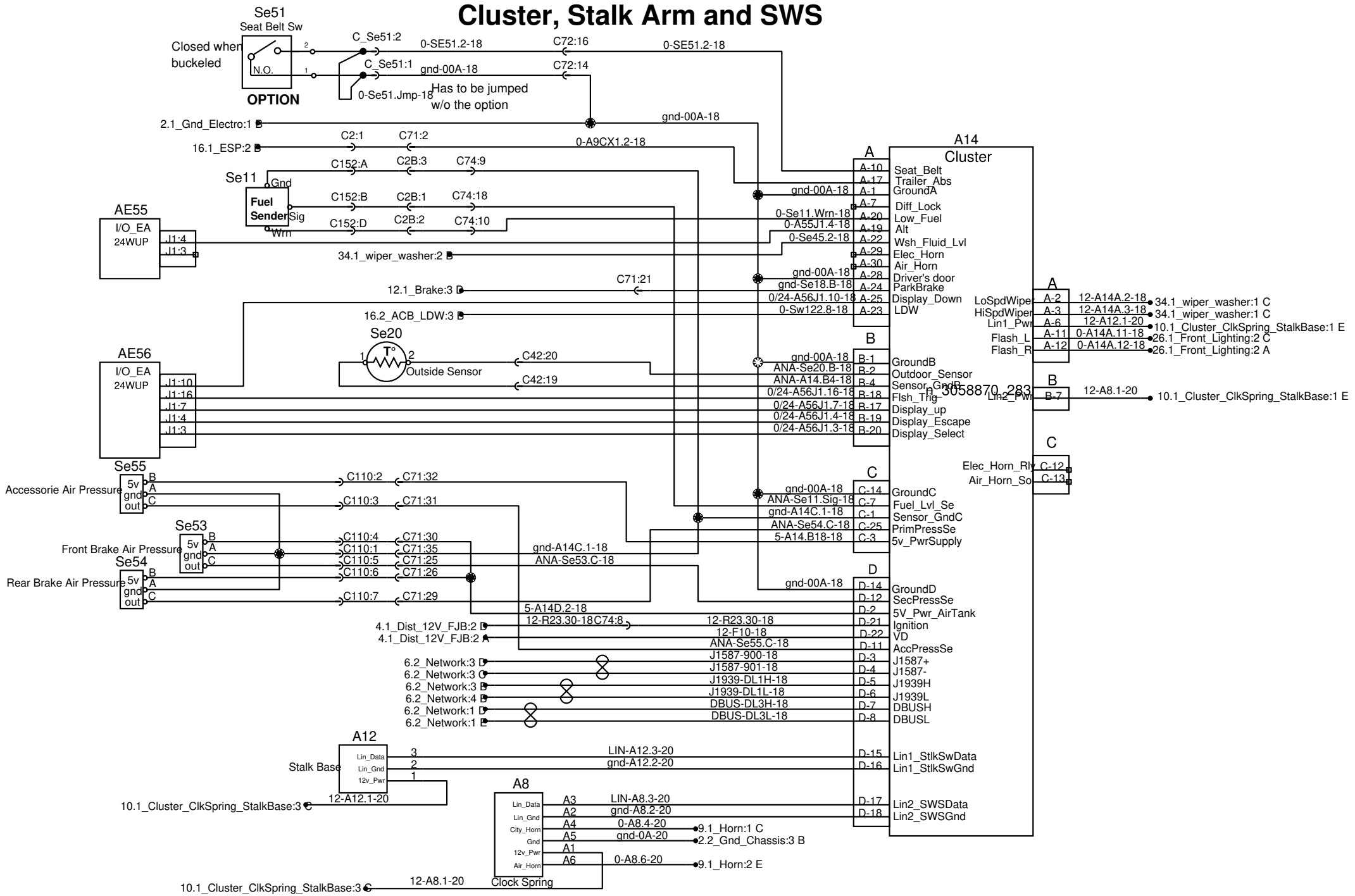

PREVOST®	WIRING DIAGRAM	No:D062140	Page:10.1	Rev:3

Cluster, Stalk Arm and SWS

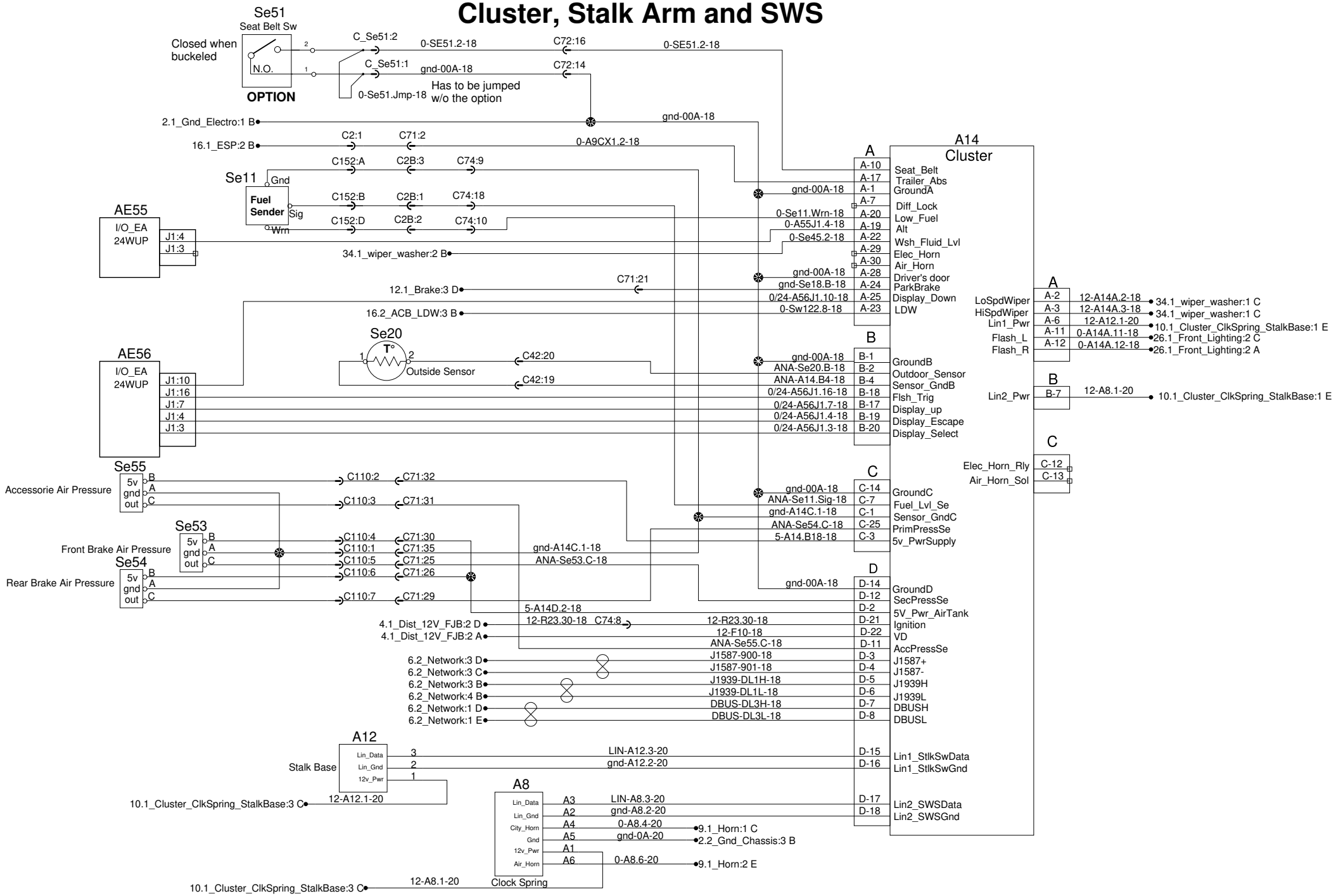

PREVOST®	WIRING DIAGRAM	No:D062140	Page:10.1	Rev:6

Lavatory and No Smoking sign

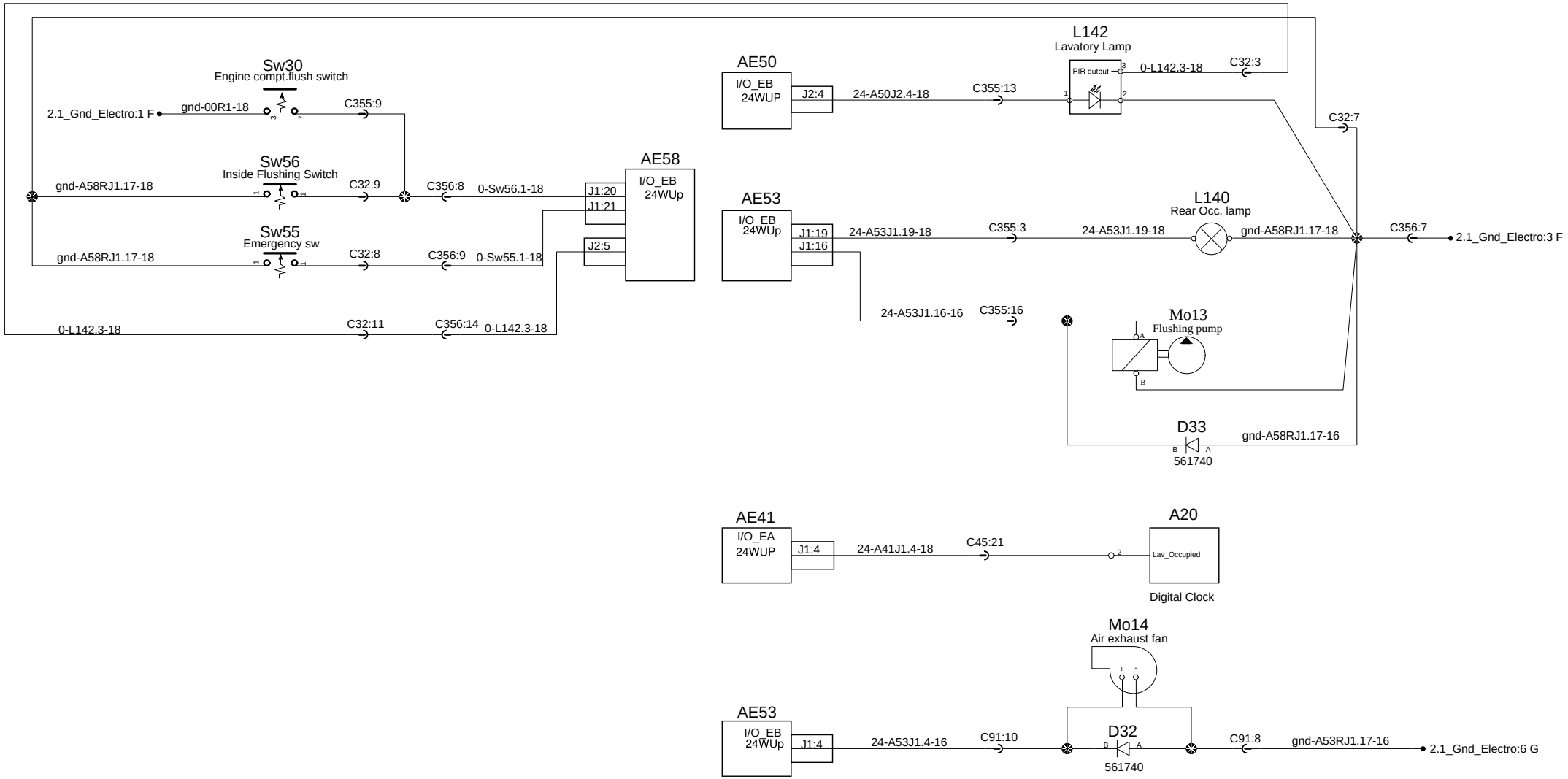

PREVOST®	WIRING DIAGRAM	No:D062140	Page:11.1	Rev:0

Brake, Engine brake and Retarder

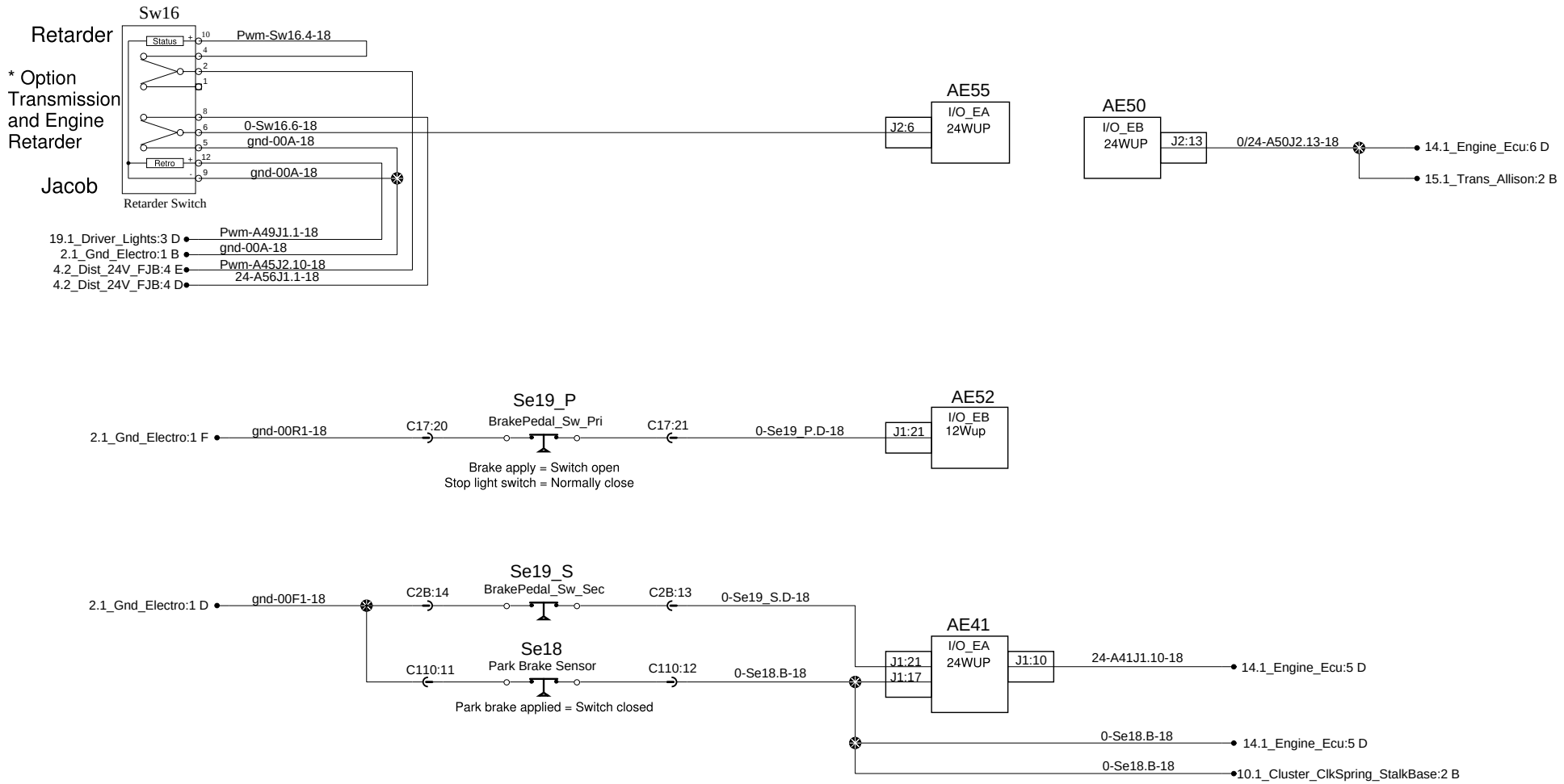

Trailler park brake

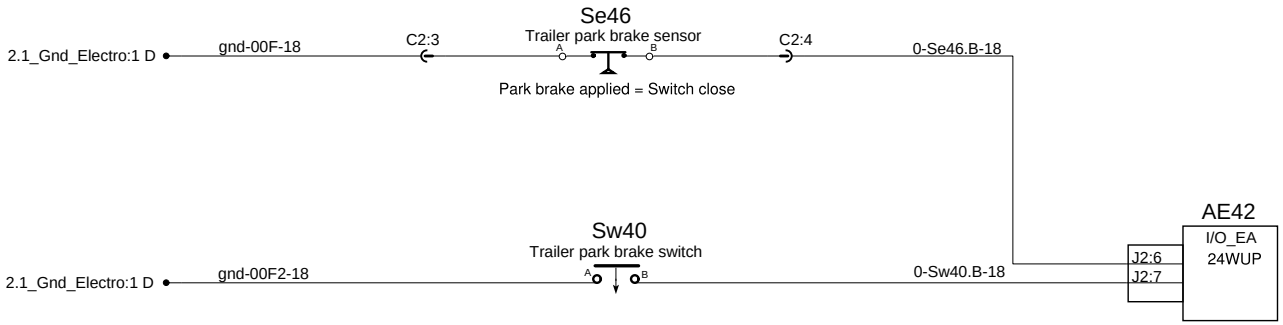

Electric fans drive

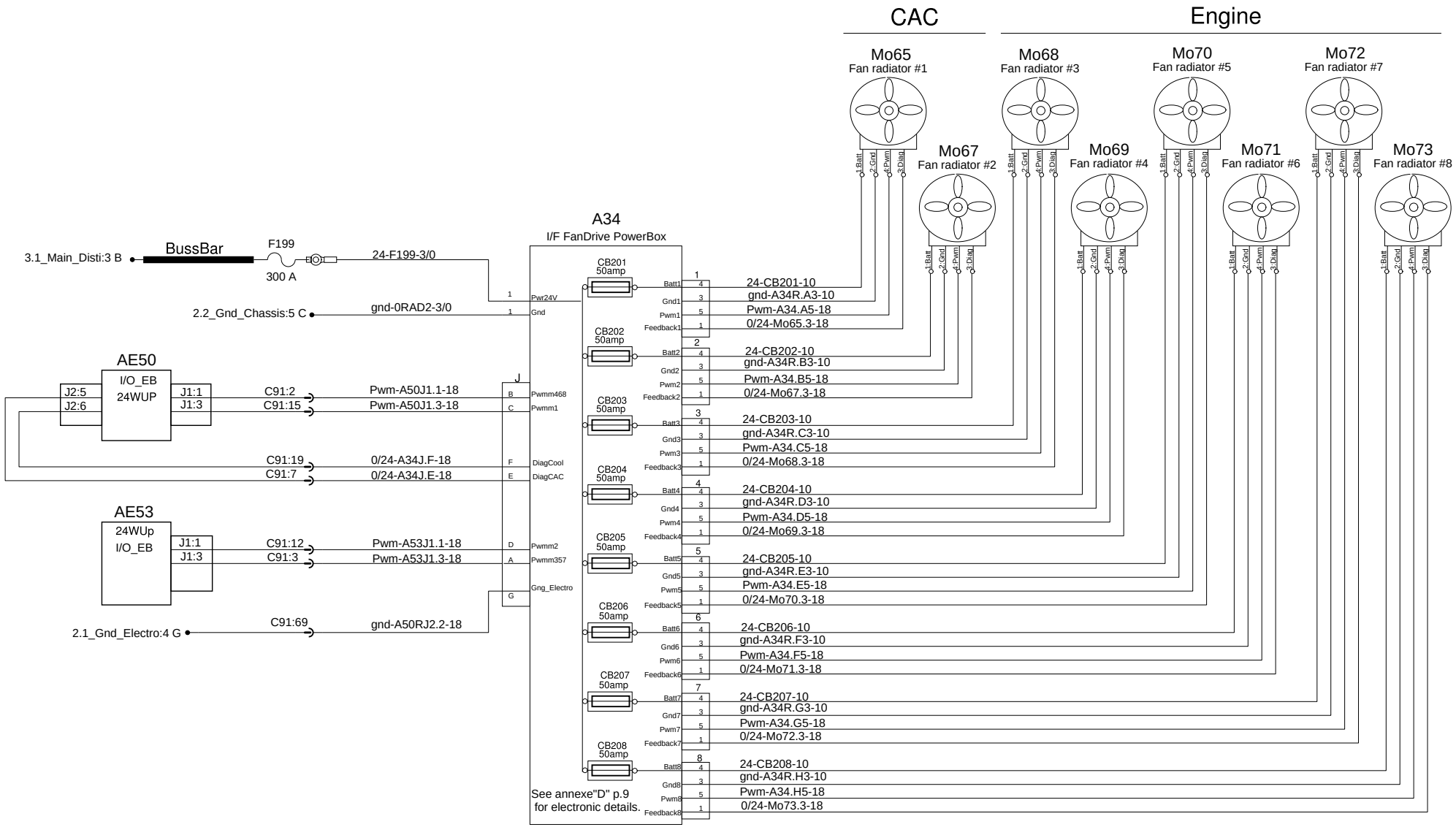

PREVOST®	WIRING DIAGRAM	No:D062140	Page:13.1	Rev:0

Engine ECU Volvo

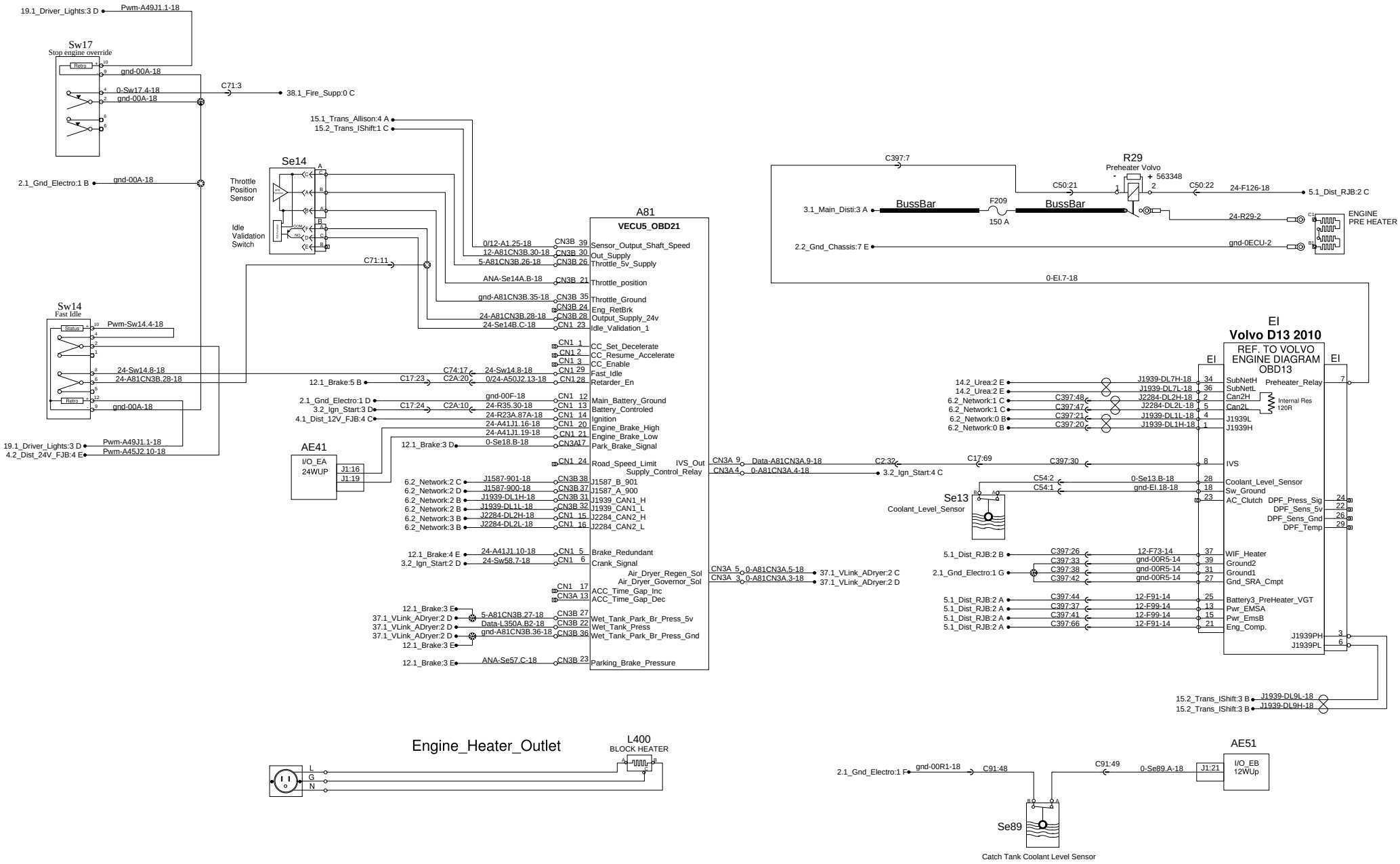

Rev:0

Page:14.1

No:D062140

WIRING DIAGRAM

PREVOST

Engine ECU Volvo

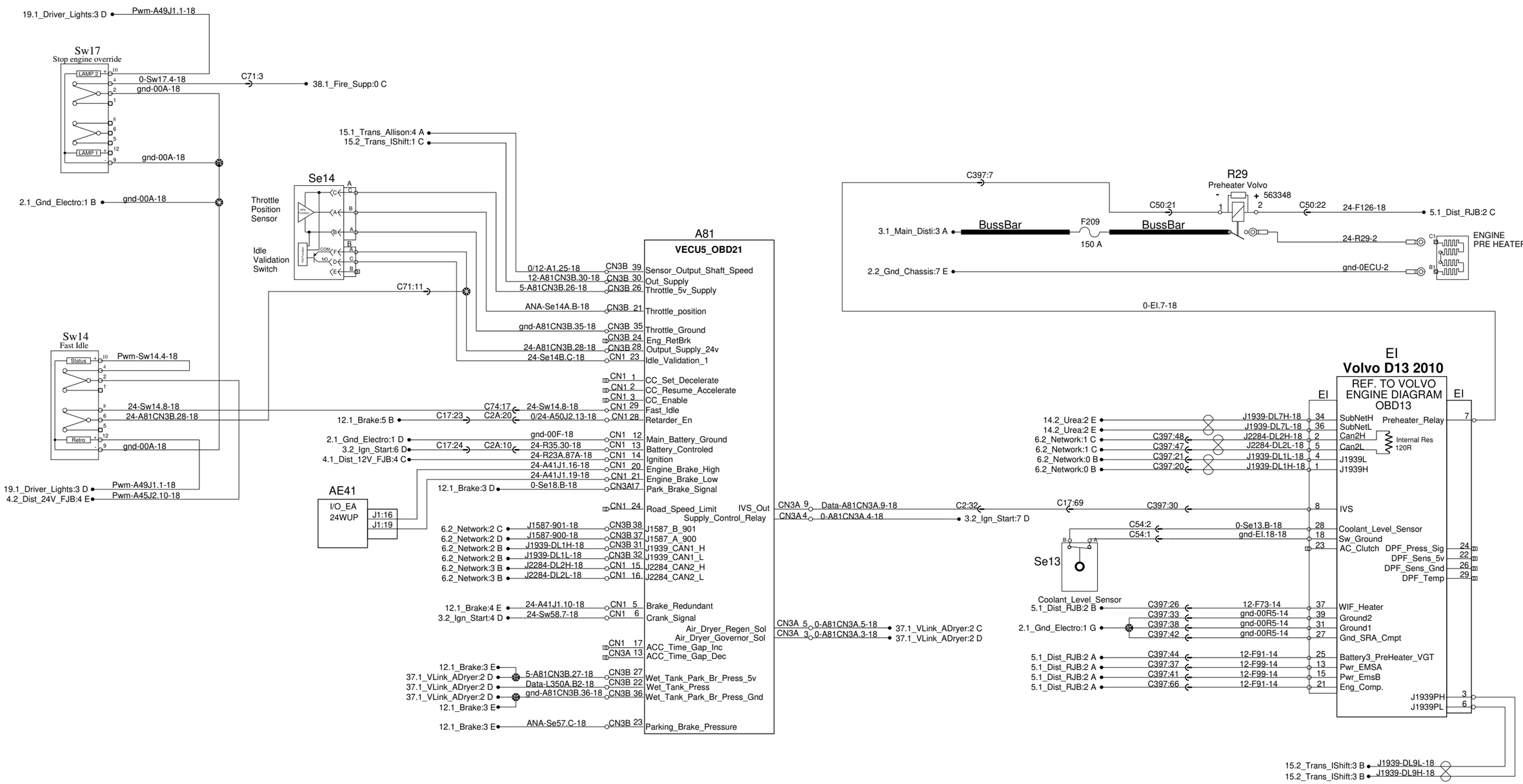

Rev:6

Page:14.1

No:D062140

WIRING DIAGRAM

PREVOST®

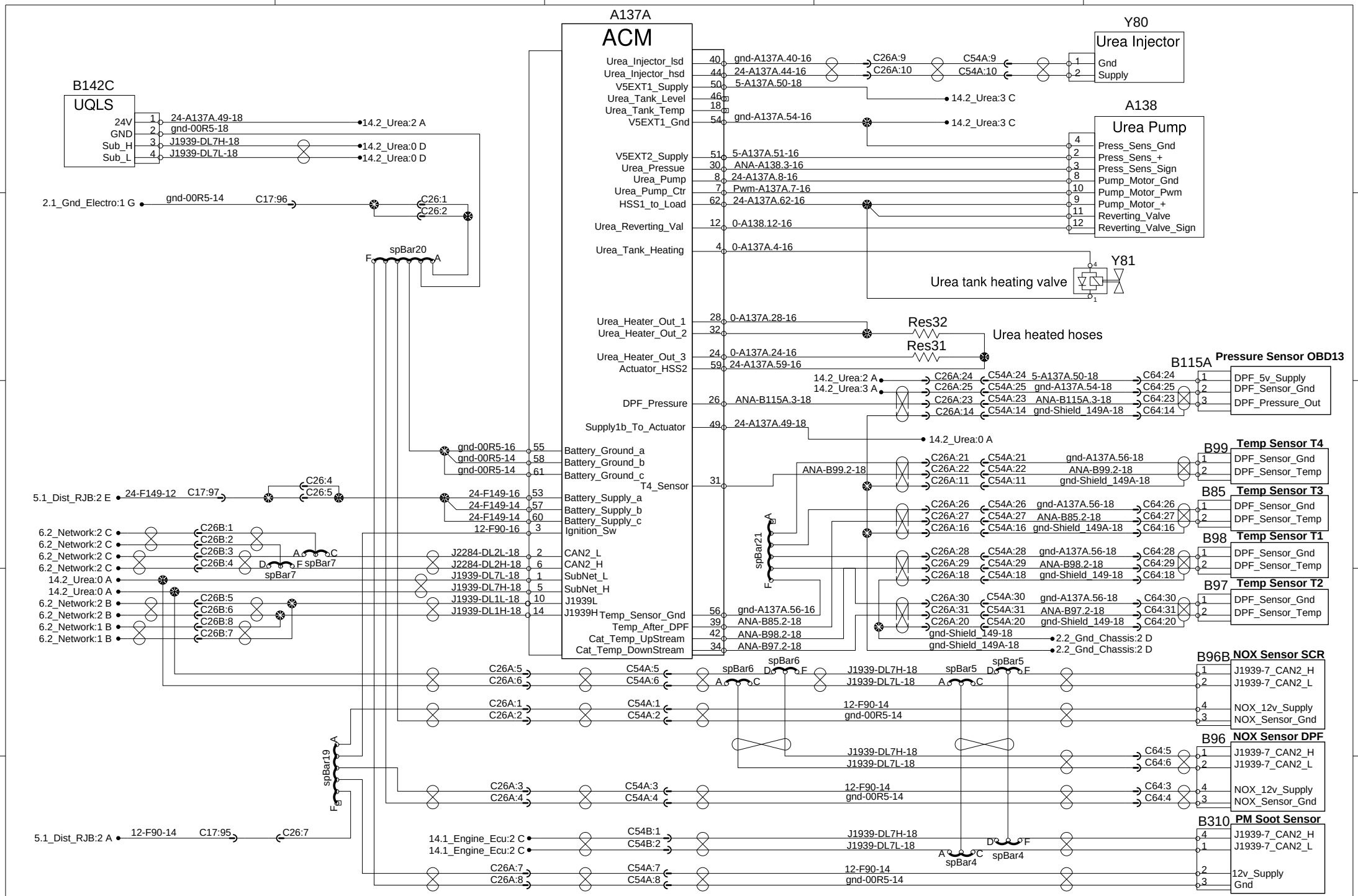
A137A
ACM
B142C
UQLS
24V
GND
Sub_H
Sub_L
24-A137A.49-18
gnd-00R5-18
J1939-DL7H-18
J1939-DL7L-18
14.2_Urea:2 A
14.2_Urea:0 D
14.2_Urea:0 D
2.1_Gnd_Electro:1 G
gnd-00R5-14
C17:96
C26:1
C26:2
spBar20
Urea_Injector_lsd
Urea_Injector_hsd
V5EXT1_Supply
Urea_Tank_Level
Urea_Tank_Temp
V5EXT1_Gnd
V5EXT2_Supply
Urea_Pressue
Urea_Pump
Urea_Pump_Ctr
HSS1_to_Load
Urea_Reverting_Val
Urea_Tank_Heating
Urea_Heater_Out_1
Urea_Heater_Out_2
Urea_Heater_Out_3
Actuator_HSS2
DPF_Pressure
Supply1b_To_Actuator
Battery_Ground_a
Battery_Ground_b
Battery_Ground_c
T4_Sensor
Battery_Supply_a
Battery_Supply_b
Battery_Supply_c
Ignition_Sw
CAN2_L
CAN2_H
SubNet_L
SubNet_H
J1939L
J1939H
Temp_Sensor_Gnd
Temp_After_DPF
Cat_Temp_UpStream
Cat_Temp_DownStream
gnd-A137A.40-16
24-A137A.44-16
5-A137A.50-18
gnd-A137A.54-16
5-A137A.51-16
ANA-A138.3-16
24-A137A.8-16
Pwm-A137A.7-16
24-A137A.62-16
0-A138.12-16
0-A137A.4-16
0-A137A.28-16
0-A137A.24-16
24-A137A.59-16
ANA-B115A.3-18
24-A137A.49-18
gnd-A137A.56-16
ANA-B85.2-18
ANA-B98.2-18
ANA-B97.2-18
C26A:9
C26A:10
C54A:9
C54A:10
Y80
Urea Injector
Gnd
Supply
A138
Urea Pump
Press_Sens_Gnd
Press_Sens_+
Press_Sens_Sign
Pump_Motor_Gnd
Pump_Motor_Pwm
Pump_Motor_+
Reverting_Valve
Reverting_Valve_Sign
Y81
Urea tank heating valve
Res32
Res31
Urea heated hoses
B115A
Pressure Sensor OBD13
DPF_5v_Supply
DPF_Sensor_Gnd
DPF_Pressure_Out
B99
Temp Sensor T4
DPF_Sensor_Gnd
DPF_Sensor_Temp
B85
Temp Sensor T3
DPF_Sensor_Gnd
DPF_Sensor_Temp
B98
Temp Sensor T1
DPF_Sensor_Gnd
DPF_Sensor_Temp
B97
Temp Sensor T2
DPF_Sensor_Gnd
DPF_Sensor_Temp
B96B
NOX Sensor SCR
J1939-7_CAN2_H
J1939-7_CAN2_L
NOX_12v_Supply
NOX_Sensor_Gnd
B96
NOX Sensor DPF
J1939-7_CAN2_H
J1939-7_CAN2_L
NOX_12v_Supply
NOX_Sensor_Gnd
B310
PM Soot Sensor
J1939-7_CAN2_H
J1939-7_CAN2_L
12v_Supply
Gnd
5.1_Dist_RJB:2 E
24-F149-12
C17:97
C26:4
C26:5
24-F149-16
24-F149-14
12-F90-16
J2284-DL2L-18
J2284-DL2H-18
J1939-DL7L-18
J1939-DL7H-18
J1939-DL1L-18
J1939-DL1H-18
6.2_Network:2 C
6.2_Network:2 B
6.2_Network:1 B
6.2_Network:1 B
C26B:1
C26B:2
C26B:3
C26B:4
C26B:5
C26B:6
C26B:8
C26B:7
spBar7
spBar21
spBar19
spBar6
spBar5
spBar4
12-F90-14
5.1_Dist_RJB:2 A
C17:95
C26:7
14.1_Engine_Ecu:2 C
C54B:1
C54B:2
C26A:7
C26A:8
C54A:7
C54A:8
2.2_Gnd_Chassis:2 D
PREVOST
WIRING DIAGRAM
No:D062140
Page:14.2
Rev:0

Transmission Alisson Gen 5

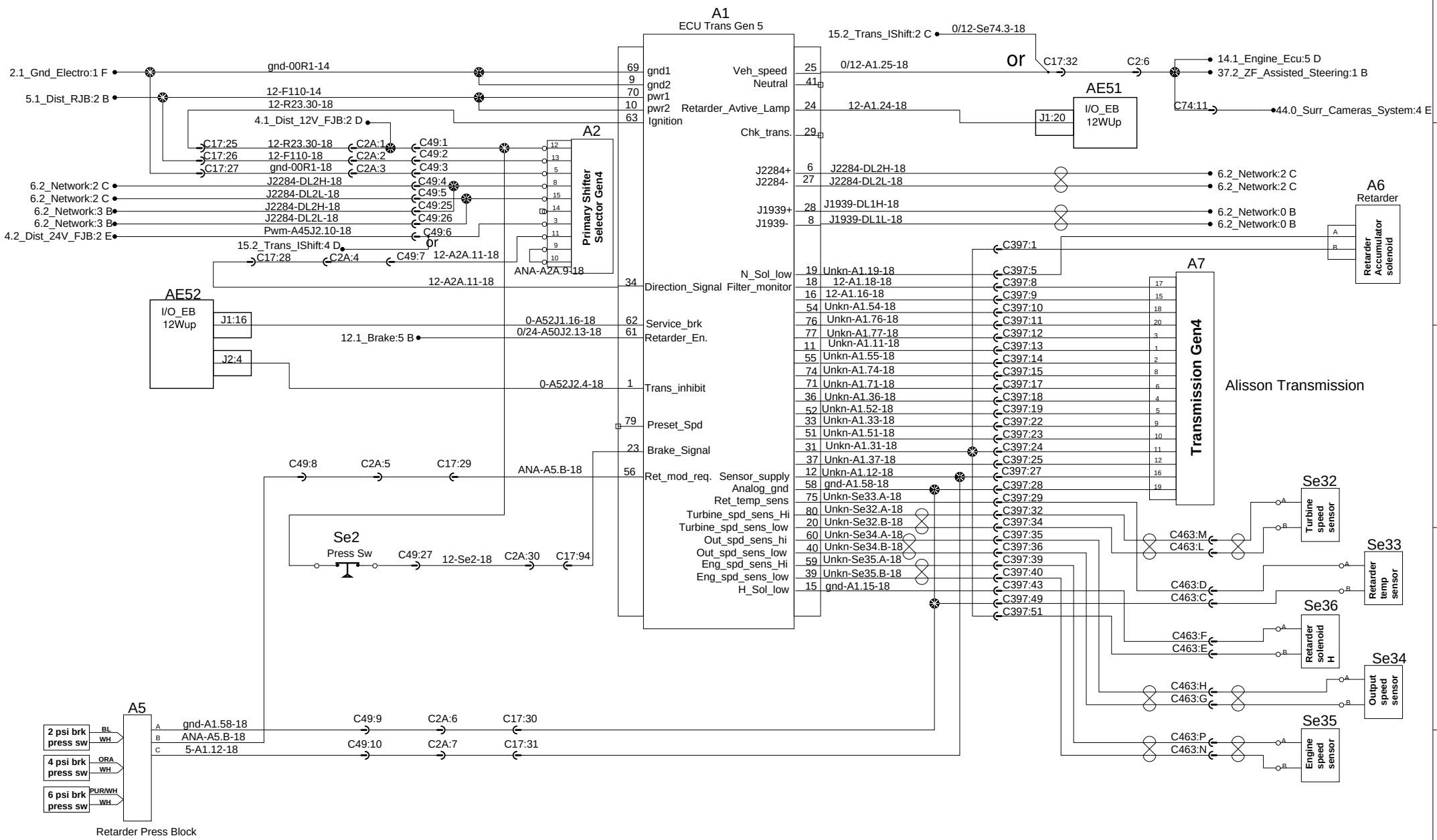

PREVOST®	WIRING DIAGRAM	No:D062140	Page:15.1	Rev:0

Transmission I_Shift

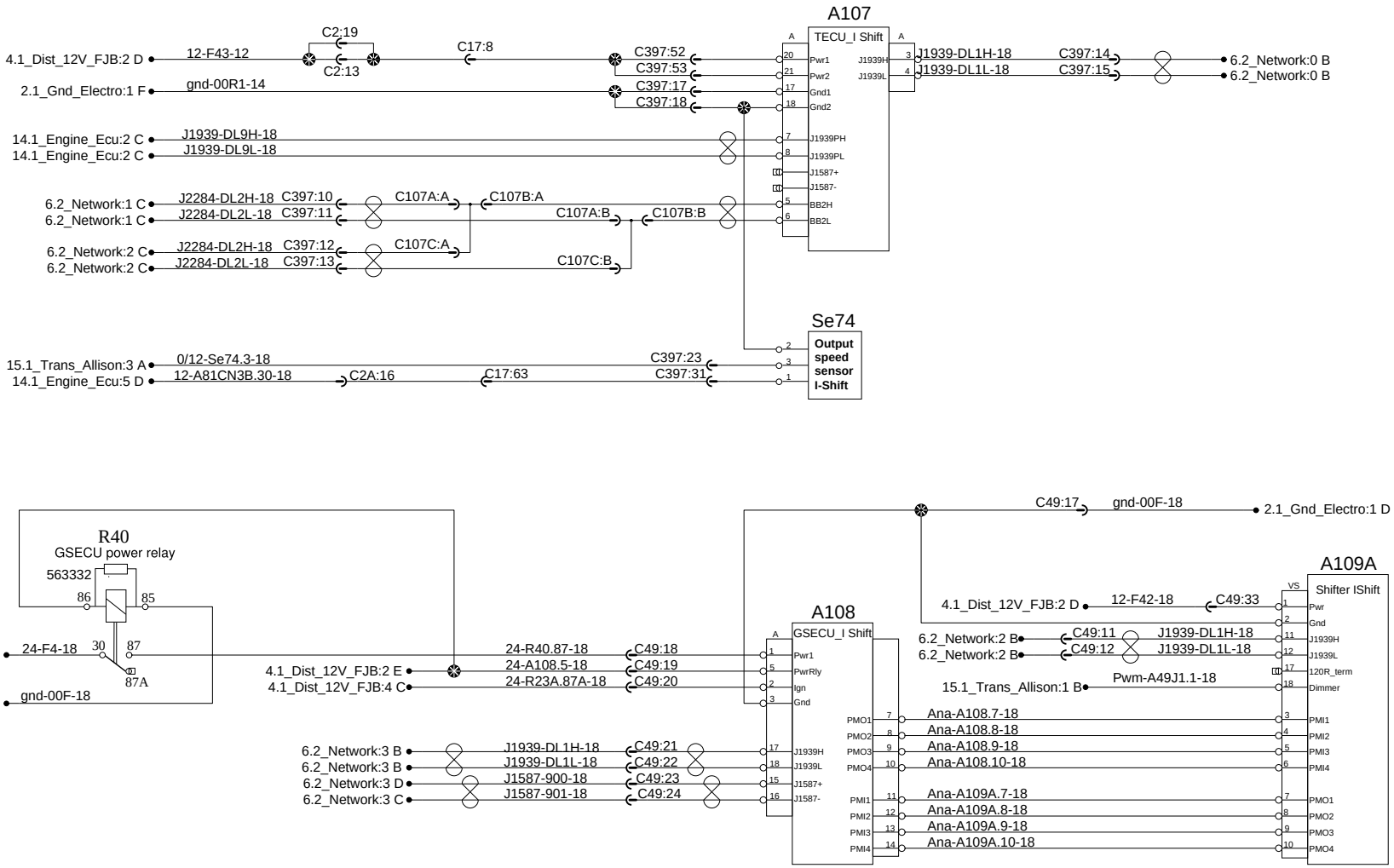

ESP

Electronic Stability Program

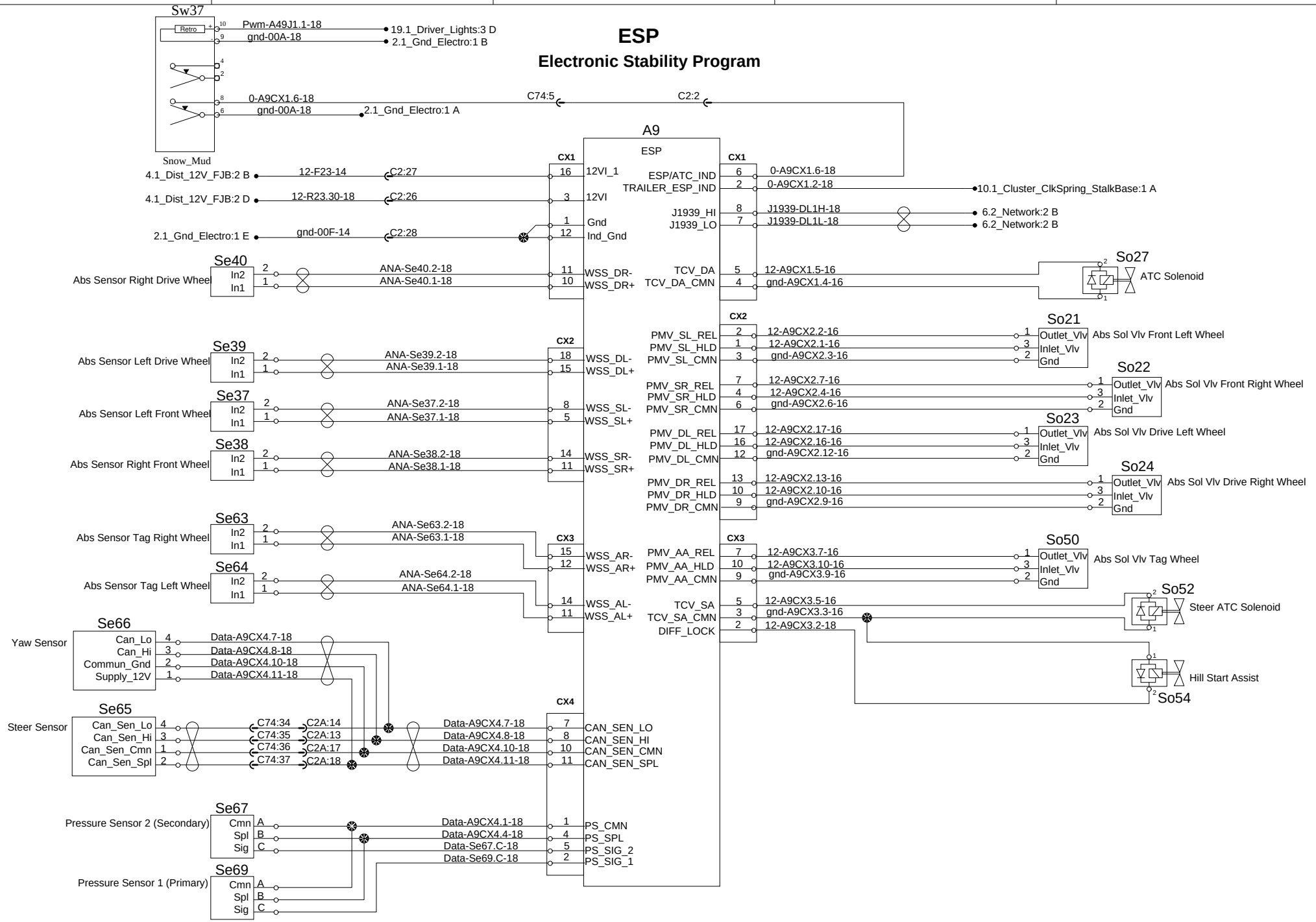

PREVOST®	WIRING DIAGRAM	No:D062140	Page:16.1	Rev:0

ACC & LDW

Adaptative cruise control breaking and Line departure warning

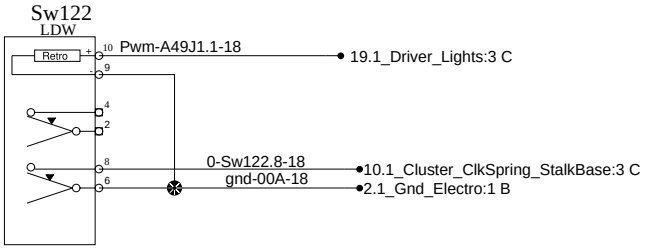

Forward collision warning

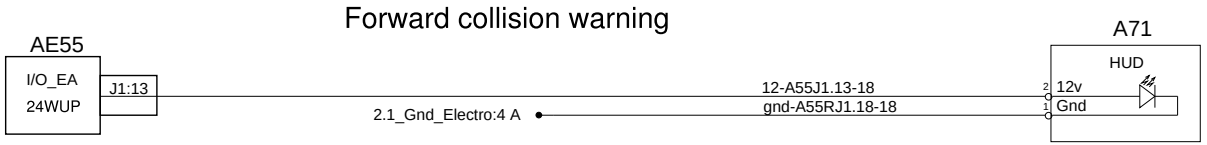

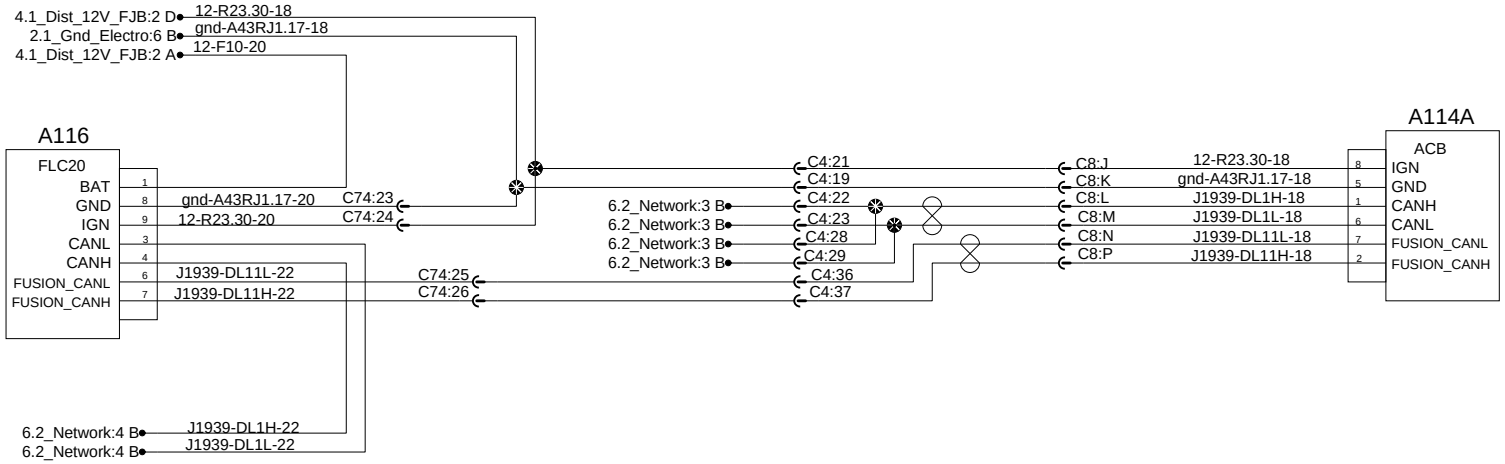

Water PreHeater (Spheros or Pro-Heat)

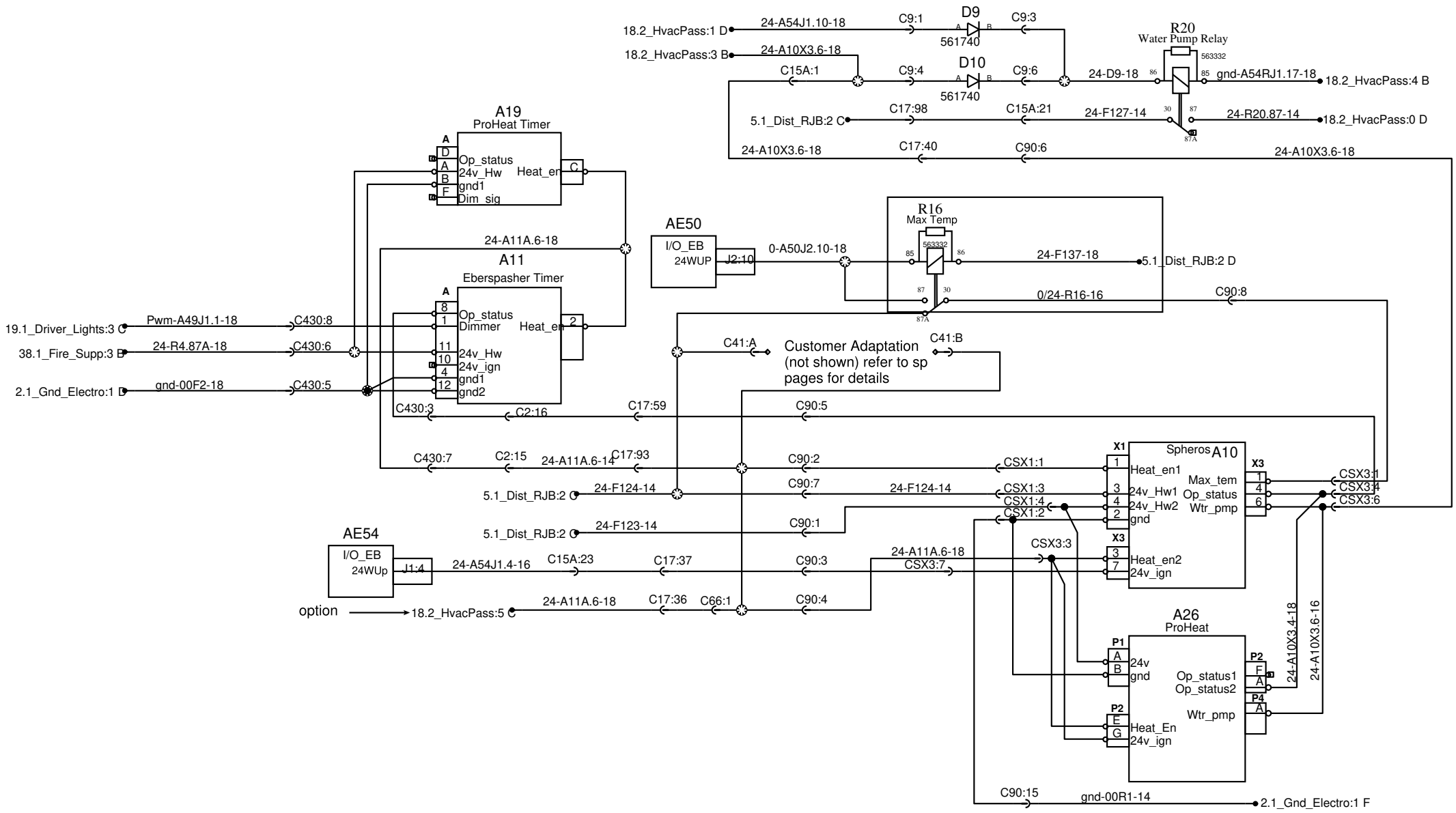

PREVOST®	WIRING DIAGRAM	No:D062140	Page:17.1	Rev:3

Water PreHeater System Forced
Customer Adaptation Offshore Heating Function

REFER TO P18.2 (STD) FOR ALL DETAILS

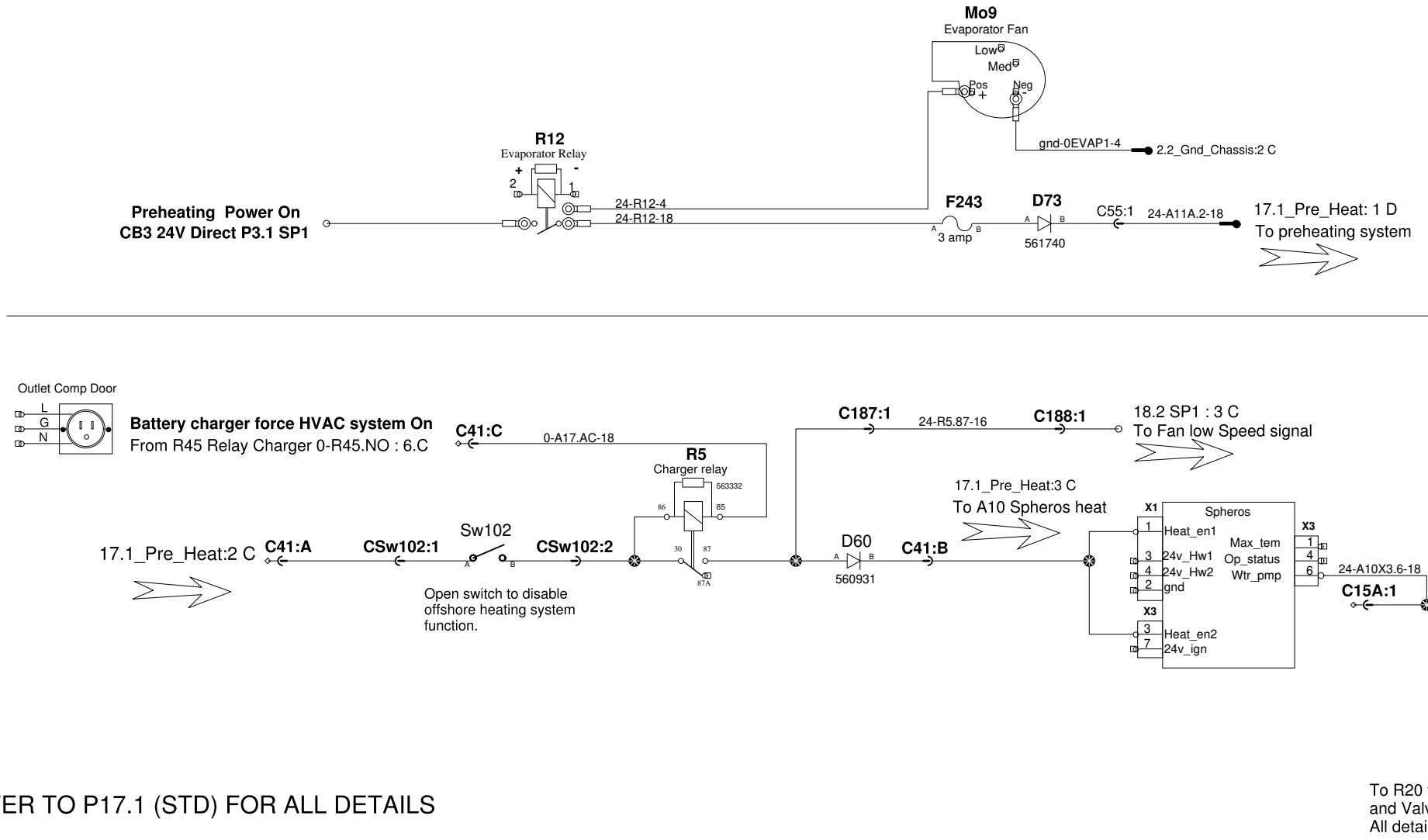

REFER TO P17.1 (STD) FOR ALL DETAILS

PREVOST®	WIRING DIAGRAM	No:D062140	Page:17.1 SP1	Rev:0

Indicator Light Pre Heating Keolis Option

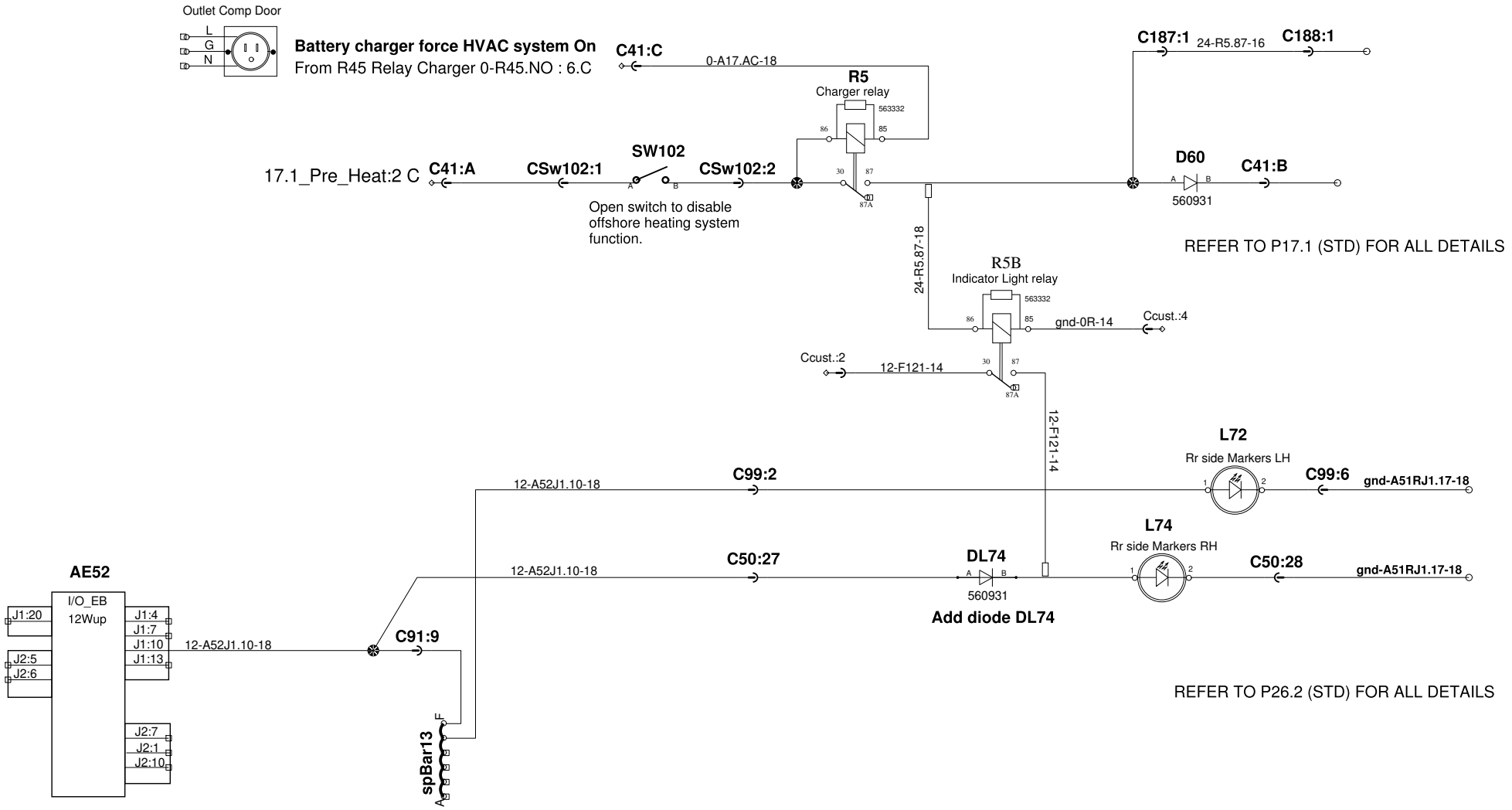

PREVOST®	WIRING DIAGRAM	No:D062140	Page:17.1 SP2	Rev:0

Hvac Defroster

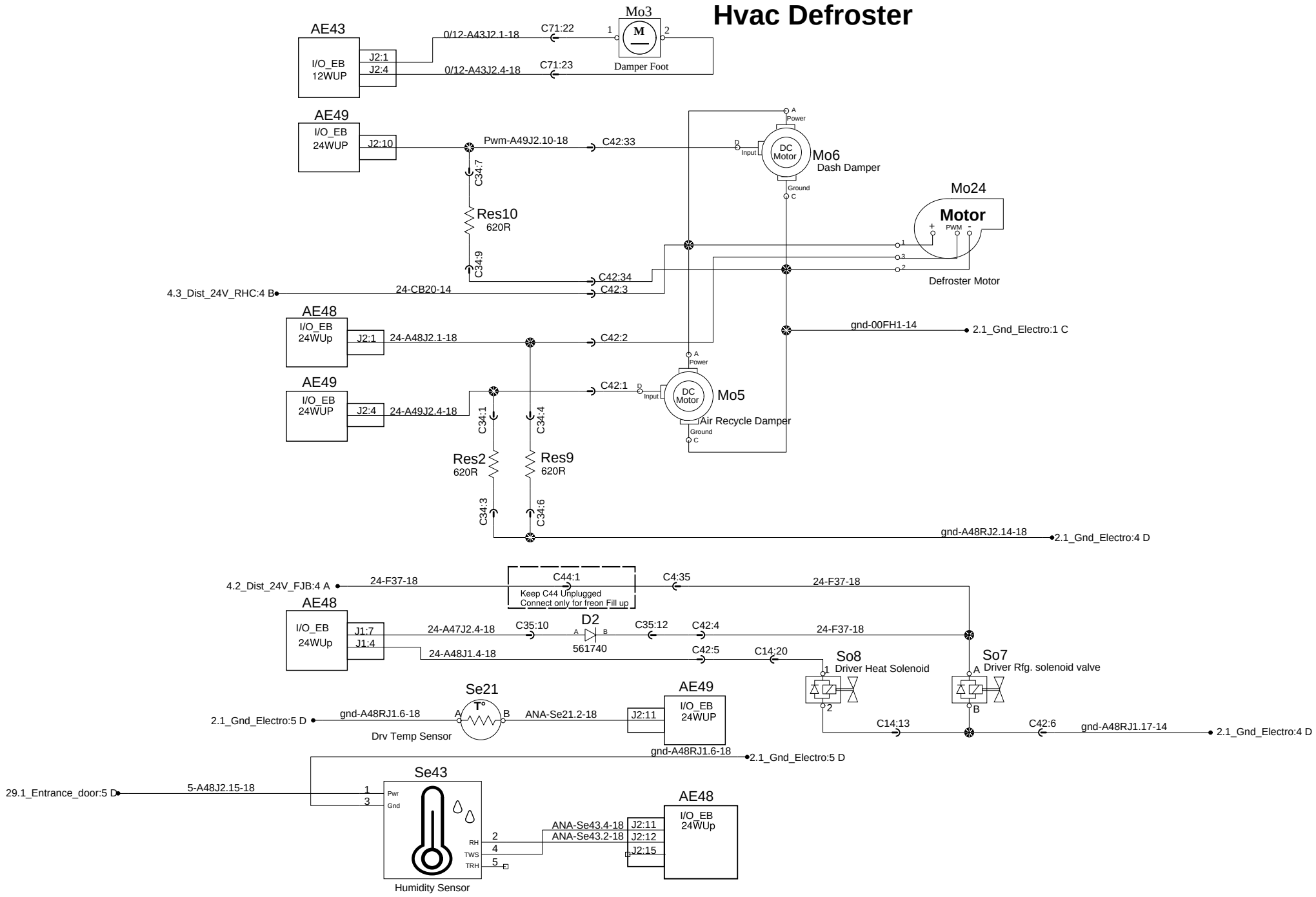

PREVOST®	WIRING DIAGRAM	No:D062140	Page:18.1	Rev:0

Hvac passengers

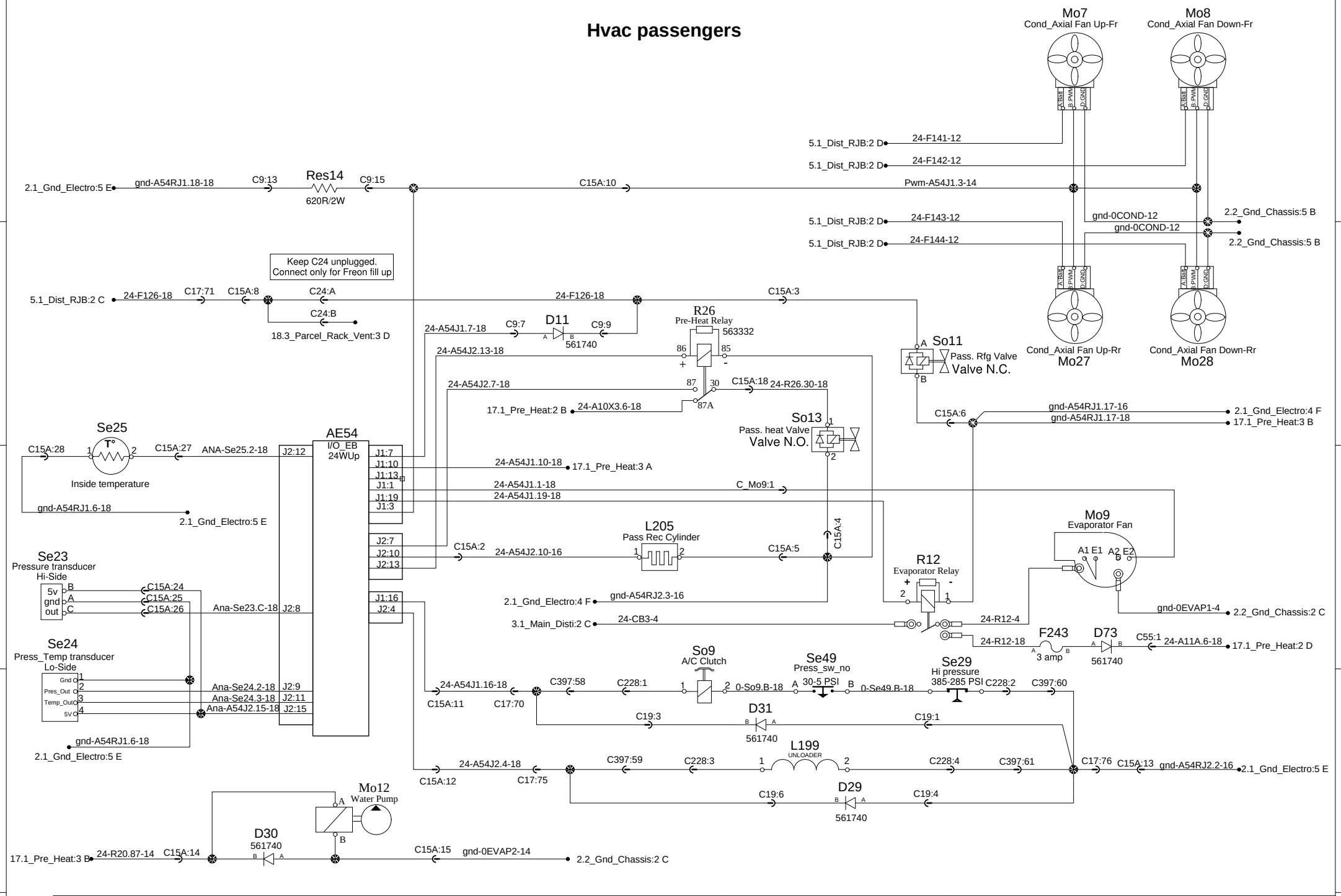

PREVOST®	WIRING DIAGRAM	No:D062140	Page:18.2	Rev:0

Hvac passengers

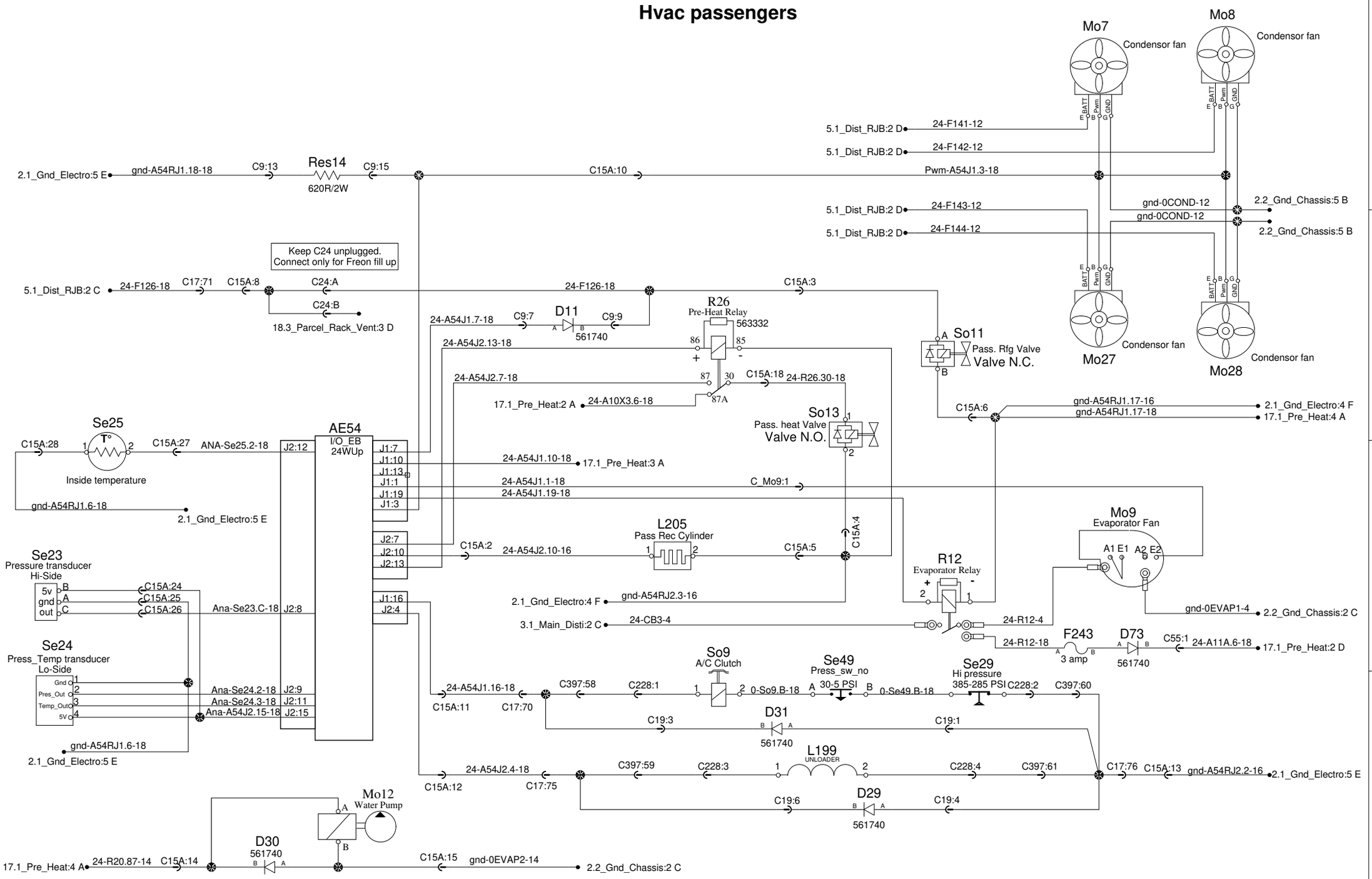

PREVOST®	WIRING DIAGRAM	No:D062140	Page:18.2	Rev:6

Hvac passengers
Customer Adaptation Offshore Heating Sys.
3 Speed Motor

REFER TO P18.2(STD) FOR ALL DETAILS

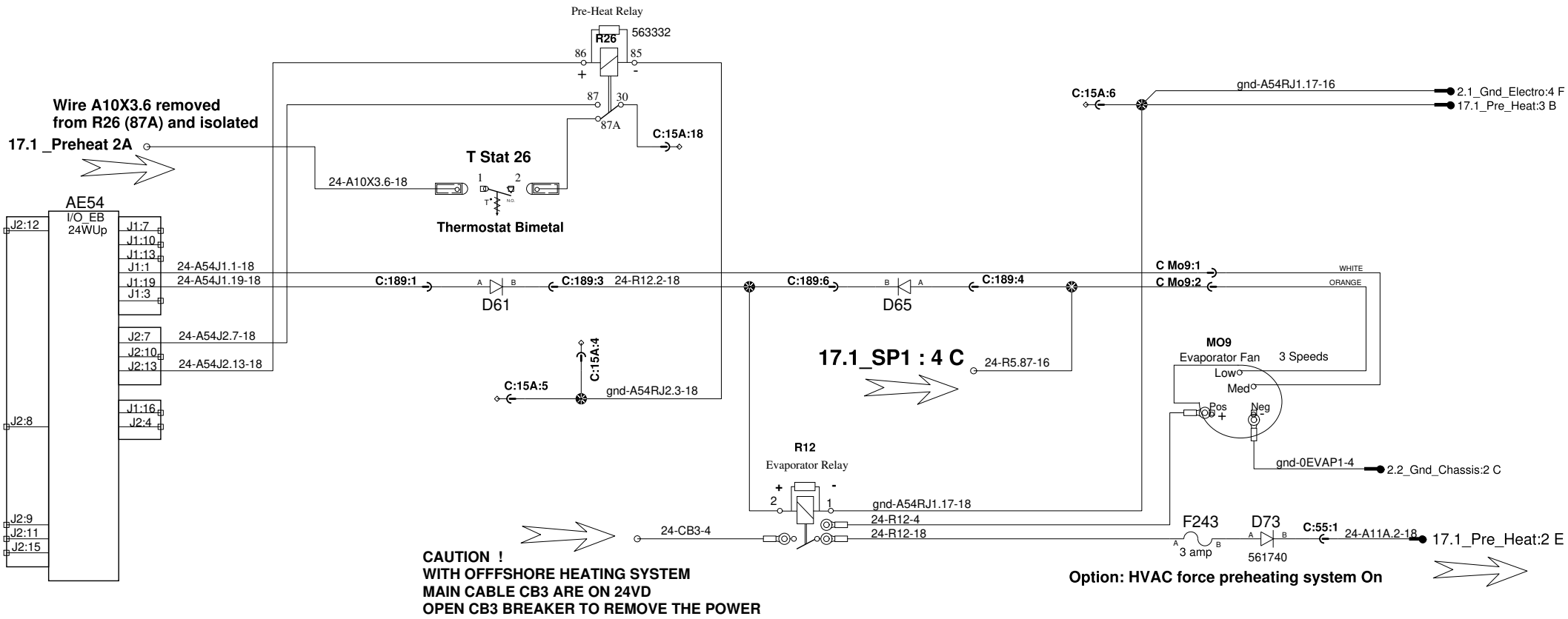

PREVOST®	WIRING DIAGRAM	No:D062140	Page:18.2 SP1	Rev:0

Hvac passengers
Customer Adaptation Offshore Heating Sys.
2 Speed Motor

REFER TO P18.2(STD) FOR ALL DETAILS

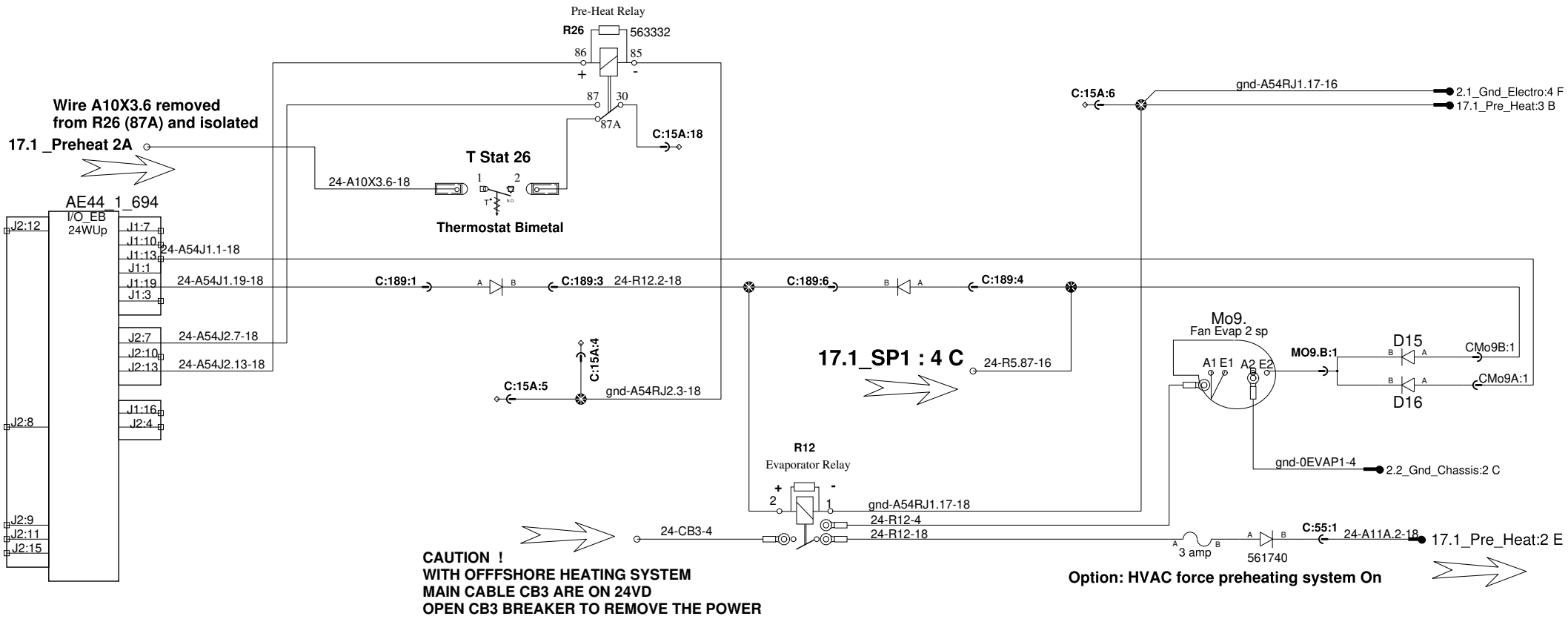

PREVOST®	WIRING DIAGRAM	No:D062140	Page:18.2 SP2	Rev:0

Parcel rack A/C system

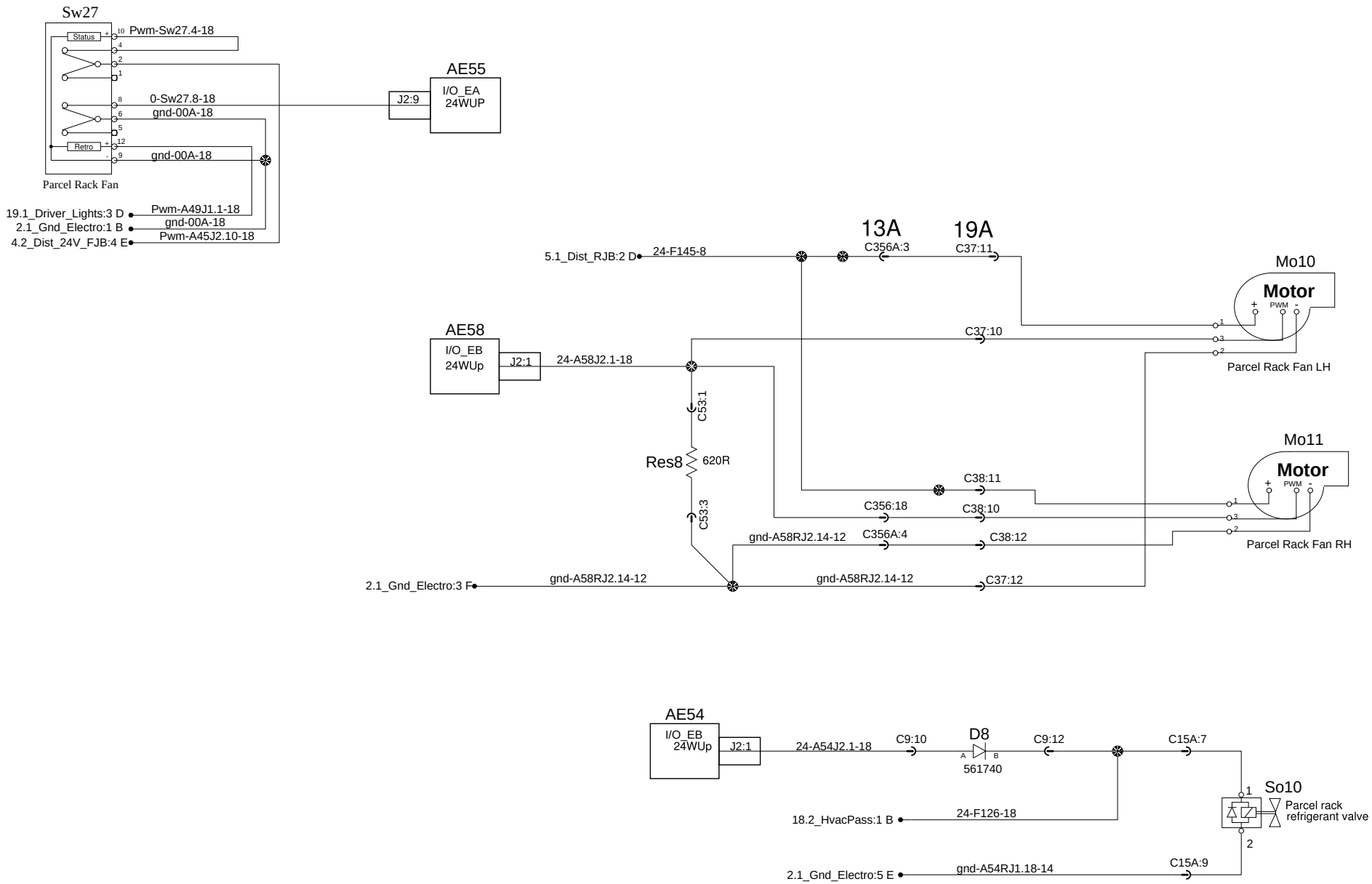

PREVOST®	WIRING DIAGRAM	No:D062140	Page:18.3	Rev:0

Roof Hatches with fan

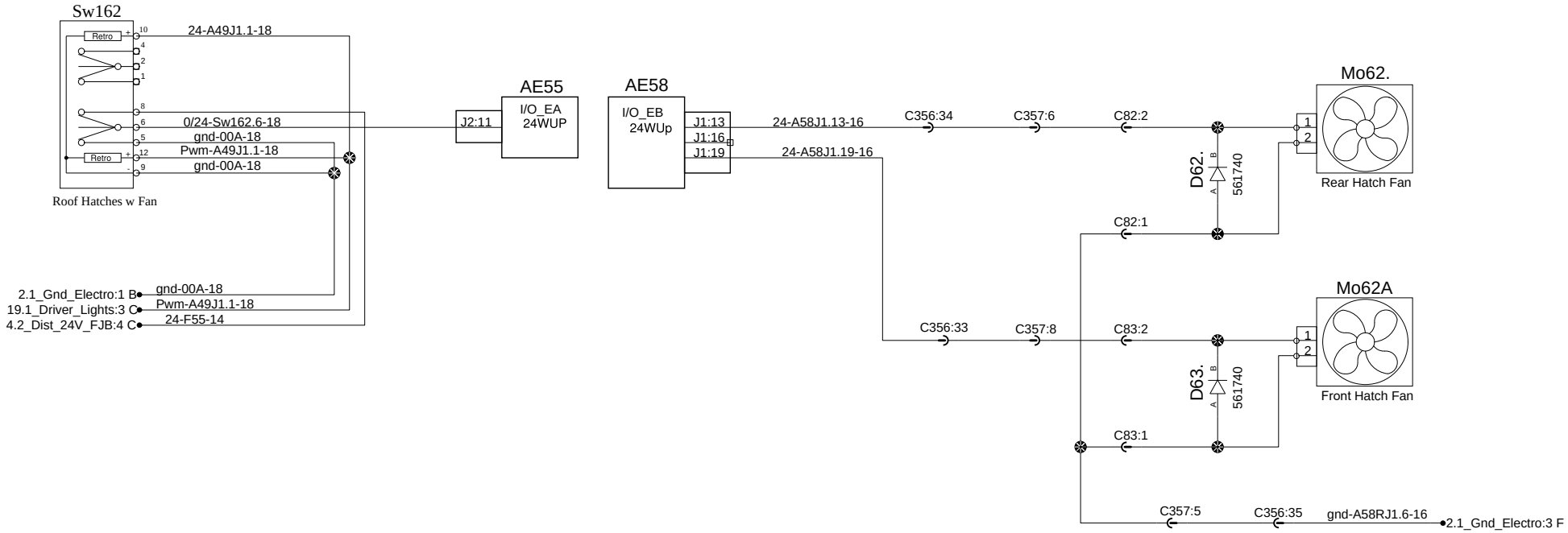

PREVOST®	WIRING DIAGRAM	No:D062140	Page:18.5	Rev:0

Driver lights

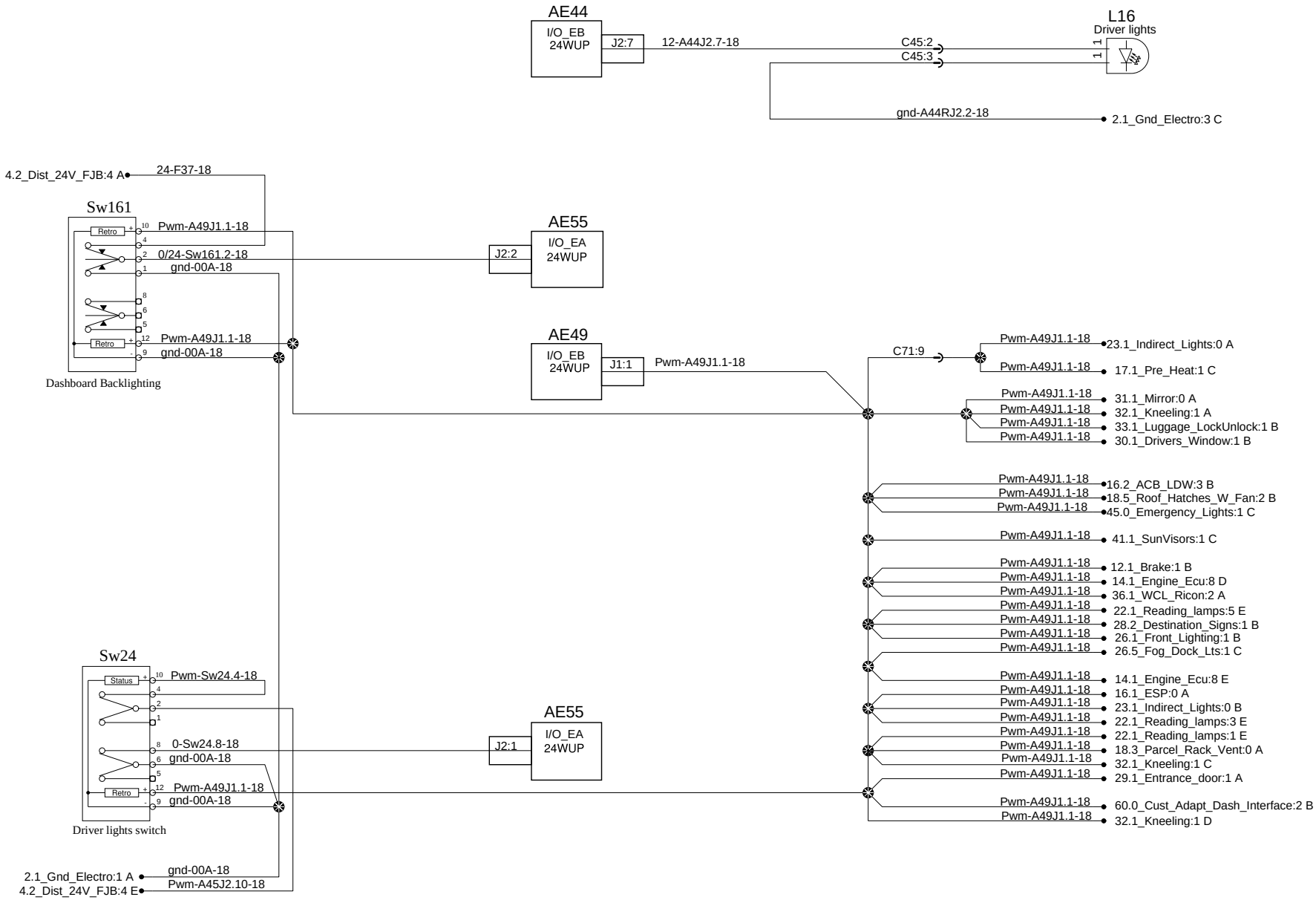

PREVOST®	WIRING DIAGRAM	No:D062140	Page:19.1	Rev:0

Driver lights

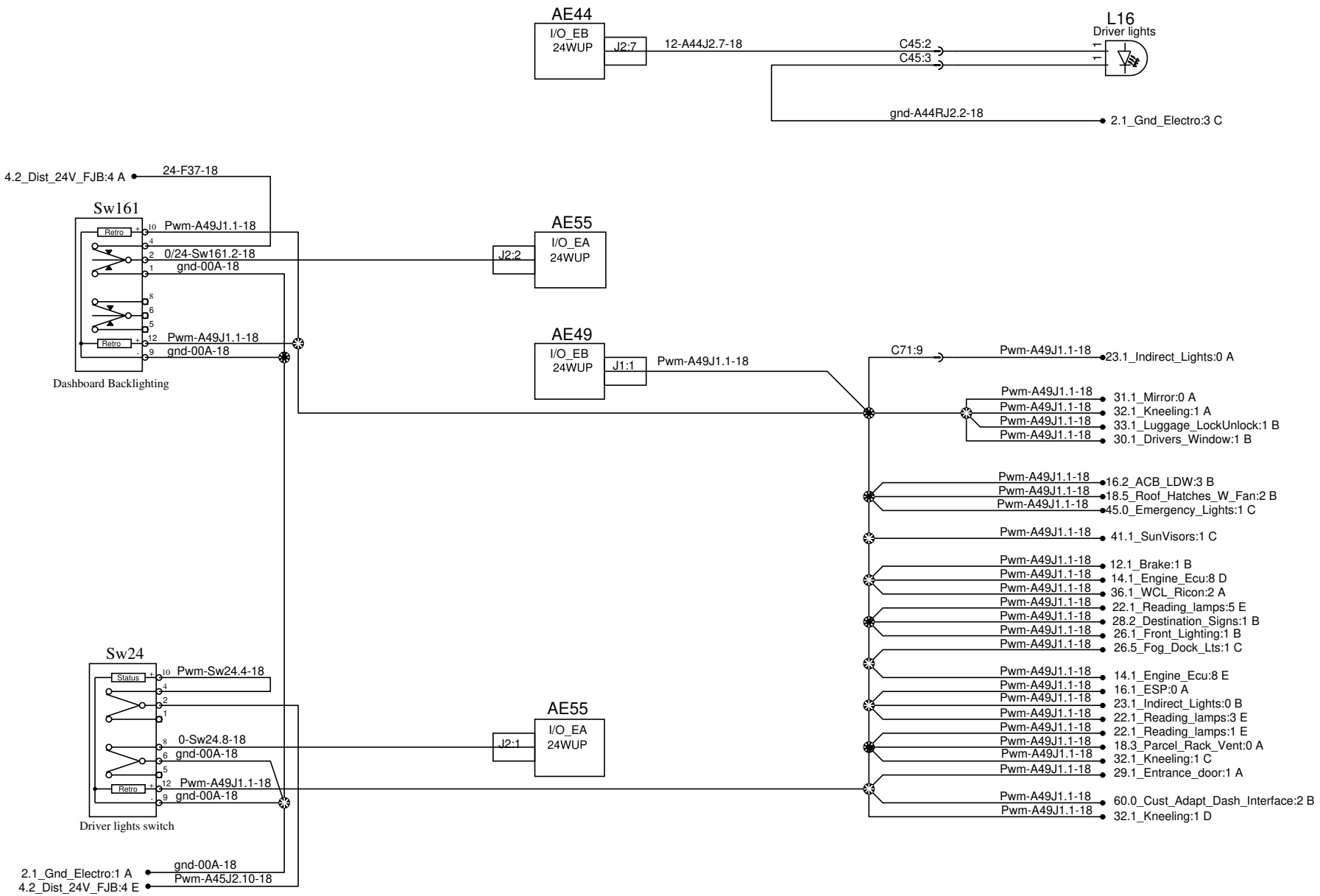

PREVOST®	WIRING DIAGRAM	No:D062140	Page:19.1	Rev:4

Aisle lights

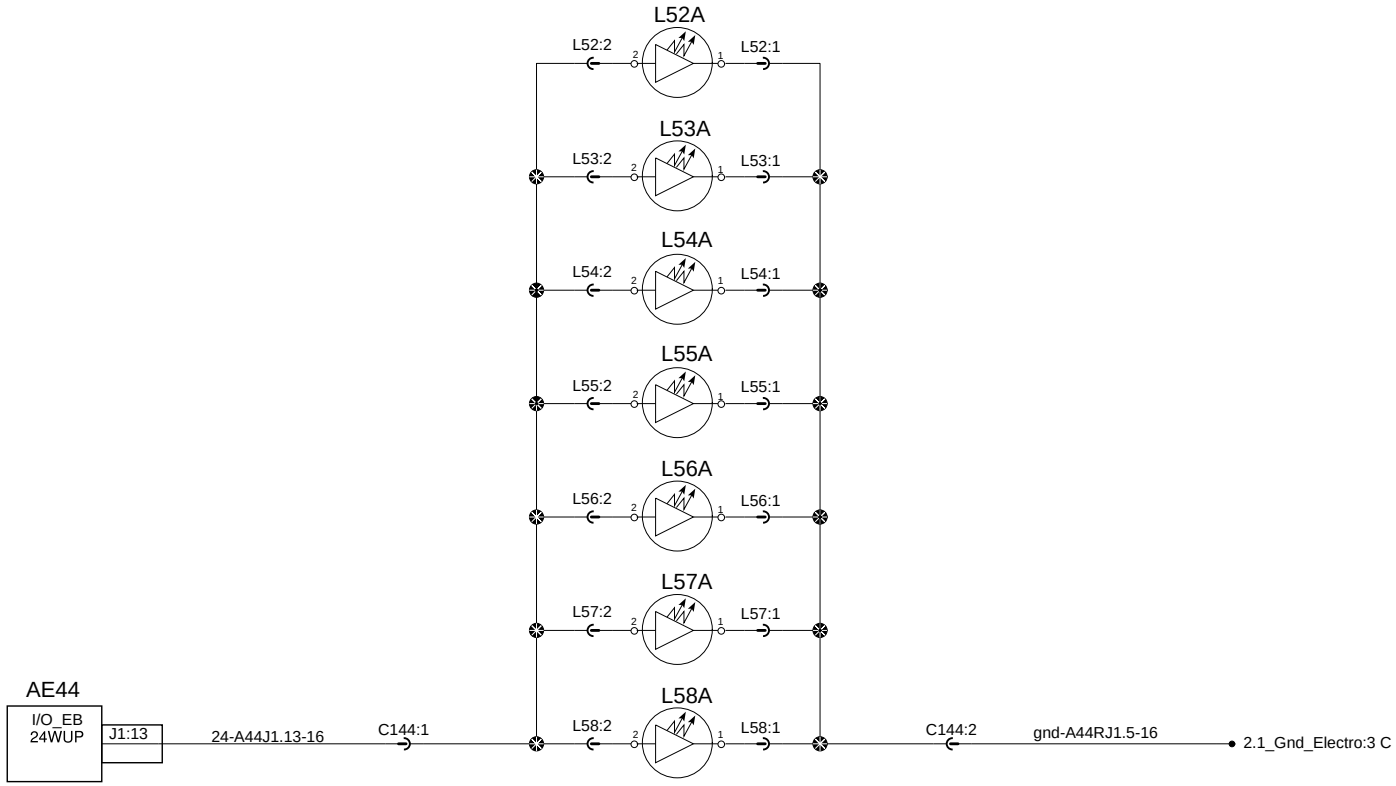

PREVOST®	WIRING DIAGRAM	No:D062140	Page:20.1	Rev:0

Aisle lights Faic seats

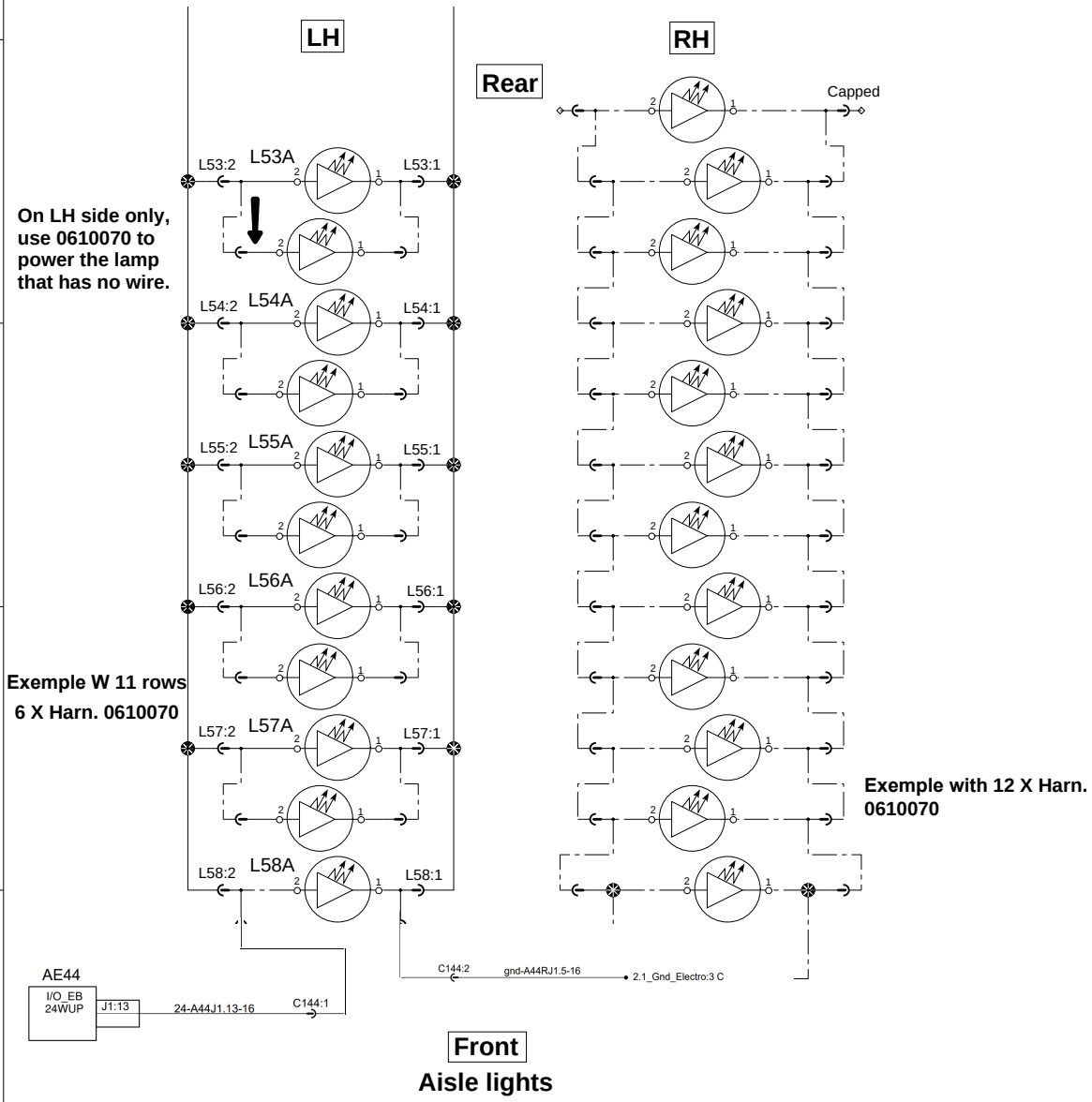

PREVOST®	WIRING DIAGRAM	No:D062140	Page:20.1 SP1	Rev:0

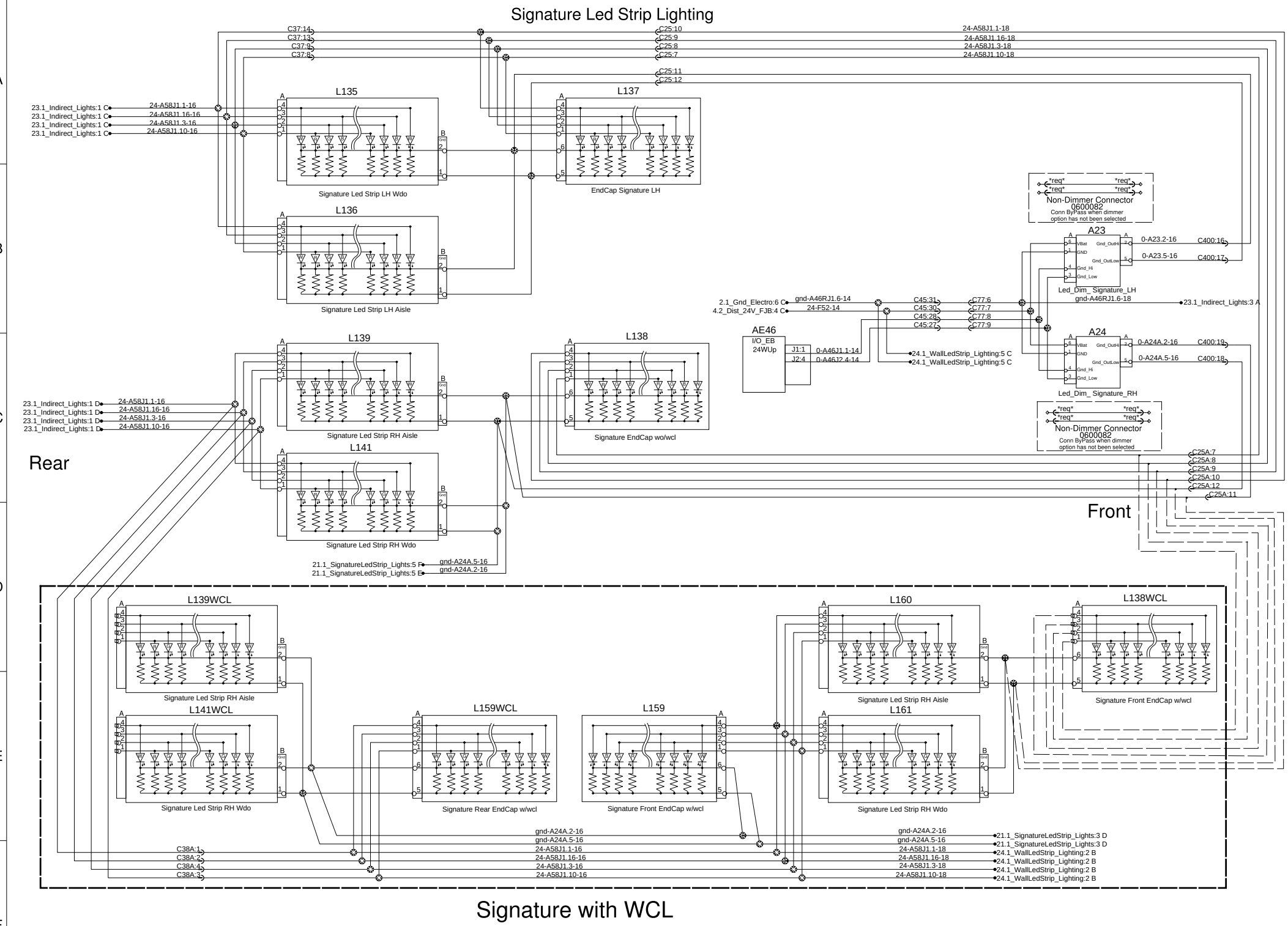
Signature Led Strip Lighting
C37:14
C37:13
C37:9
C37:8
C25:10
C25:9
C25:8
C25:7
C25:11
C25:12
24-A58J1.1-18
24-A58J1.16-18
24-A58J1.3-18
24-A58J1.10-18
23.1_Indirect_Lights:1 C
24-A58J1.1-16
24-A58J1.16-16
24-A58J1.3-16
24-A58J1.10-16
L135
Signature Led Strip LH Wdo
L136
Signature Led Strip LH Aisle
L137
EndCap Signature LH
req
Non-Dimmer Connector
0600082
Conn ByPass when dimmer
option has not been selected
A23
0-A23.2-16
0-A23.5-16
C400:16
C400:17
Led_Dim_ Signature_LH
gnd-A46RJ1.6-18
23.1_Indirect_Lights:3 A
2.1_Gnd_Electro:6 C
4.2_Dist_24V_FJB:4 C
gnd-A46RJ1.6-14
24-F52-14
C45:31
C45:30
C45:28
C45:27
C77:6
C77:7
C77:8
C77:9
AE46
I/O_EB
24WUp
J1:1
J2:4
0-A46J1.1-14
0-A46J2.4-14
24.1_WallLedStrip_Lighting:5 C
24.1_WallLedStrip_Lighting:5 C
A24
0-A24A.2-16
0-A24A.5-16
C400:19
C400:18
Led_Dim_ Signature_RH
23.1_Indirect_Lights:1 D
24-A58J1.1-16
24-A58J1.16-16
24-A58J1.3-16
24-A58J1.10-16
L139
Signature Led Strip RH Aisle
L138
Signature EndCap wo/wcl
Rear
L141
Signature Led Strip RH Wdo
C25A:7
C25A:8
C25A:9
C25A:10
C25A:12
C25A:11
Front
21.1_SignatureLedStrip_Lights:5 F
21.1_SignatureLedStrip_Lights:5 E
gnd-A24A.5-16
gnd-A24A.2-16
L139WCL
Signature Led Strip RH Aisle
L141WCL
Signature Led Strip RH Wdo
L159WCL
Signature Rear EndCap w/wcl
L159
Signature Front EndCap w/wcl
L160
Signature Led Strip RH Aisle
L161
Signature Led Strip RH Wdo
L138WCL
Signature Front EndCap w/wcl
C38A:1
C38A:2
C38A:4
C38A:3
gnd-A24A.2-16
gnd-A24A.5-16
24-A58J1.1-16
24-A58J1.16-16
24-A58J1.3-16
24-A58J1.10-16
24-A58J1.1-18
24-A58J1.16-18
24-A58J1.3-18
24-A58J1.10-18
21.1_SignatureLedStrip_Lights:3 D
24.1_WallLedStrip_Lighting:2 B
Signature with WCL
Rev:0
Page:21.1
No:D062140
WIRING DIAGRAM
PREVOST

Reading lamp and hostess chime with WCL Ricon RH

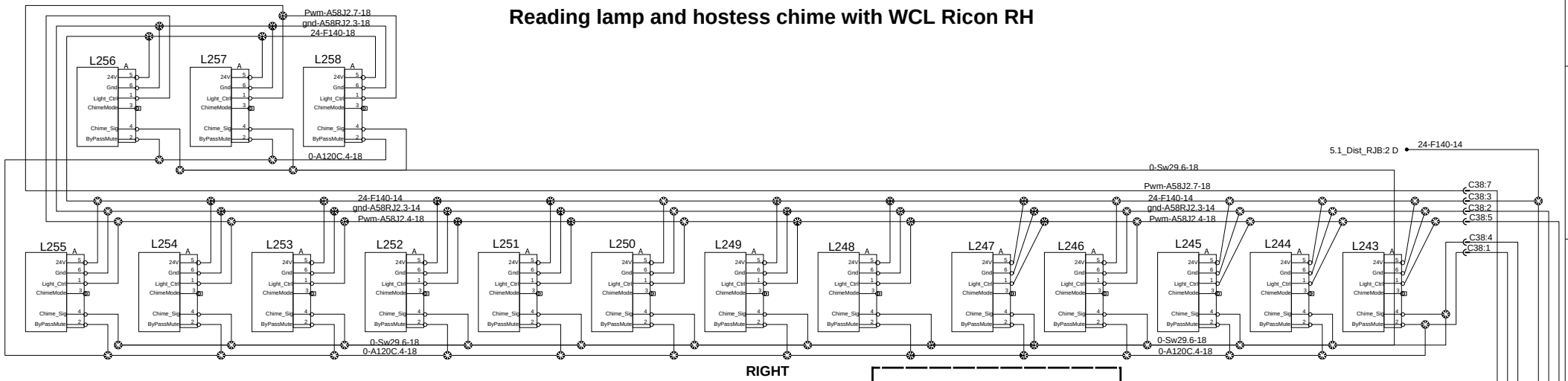

Front

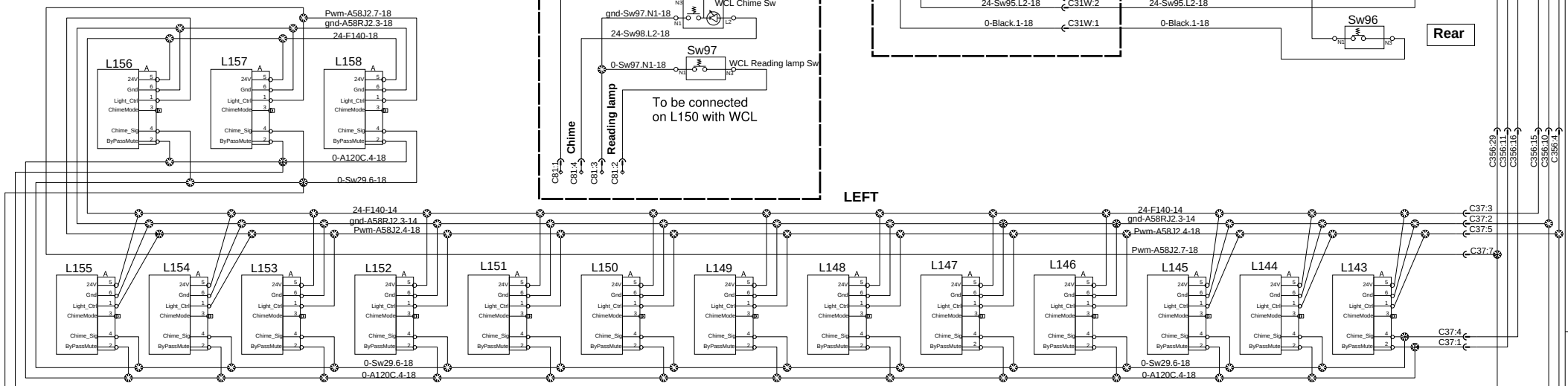

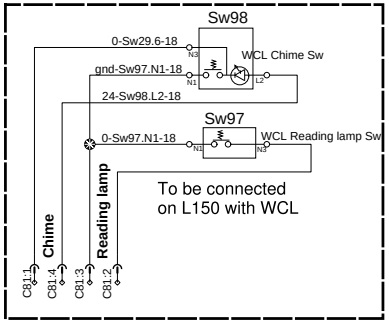

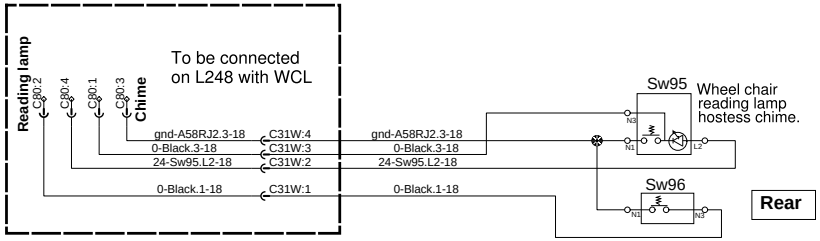

C356:29
C356:11
C356:16
C356:15
C356:10
C356:4

Reading lamp and hostess chime LH

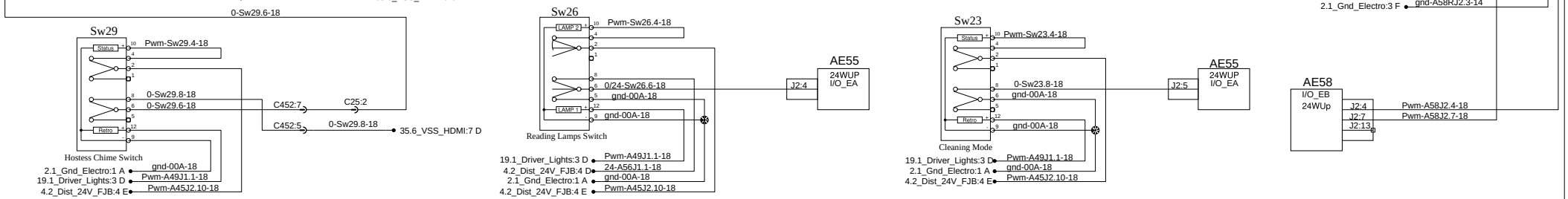

Rev:0

Page:22.1

No:D062140

WIRING DIAGRAM

PREVOST®

Indirect lighting

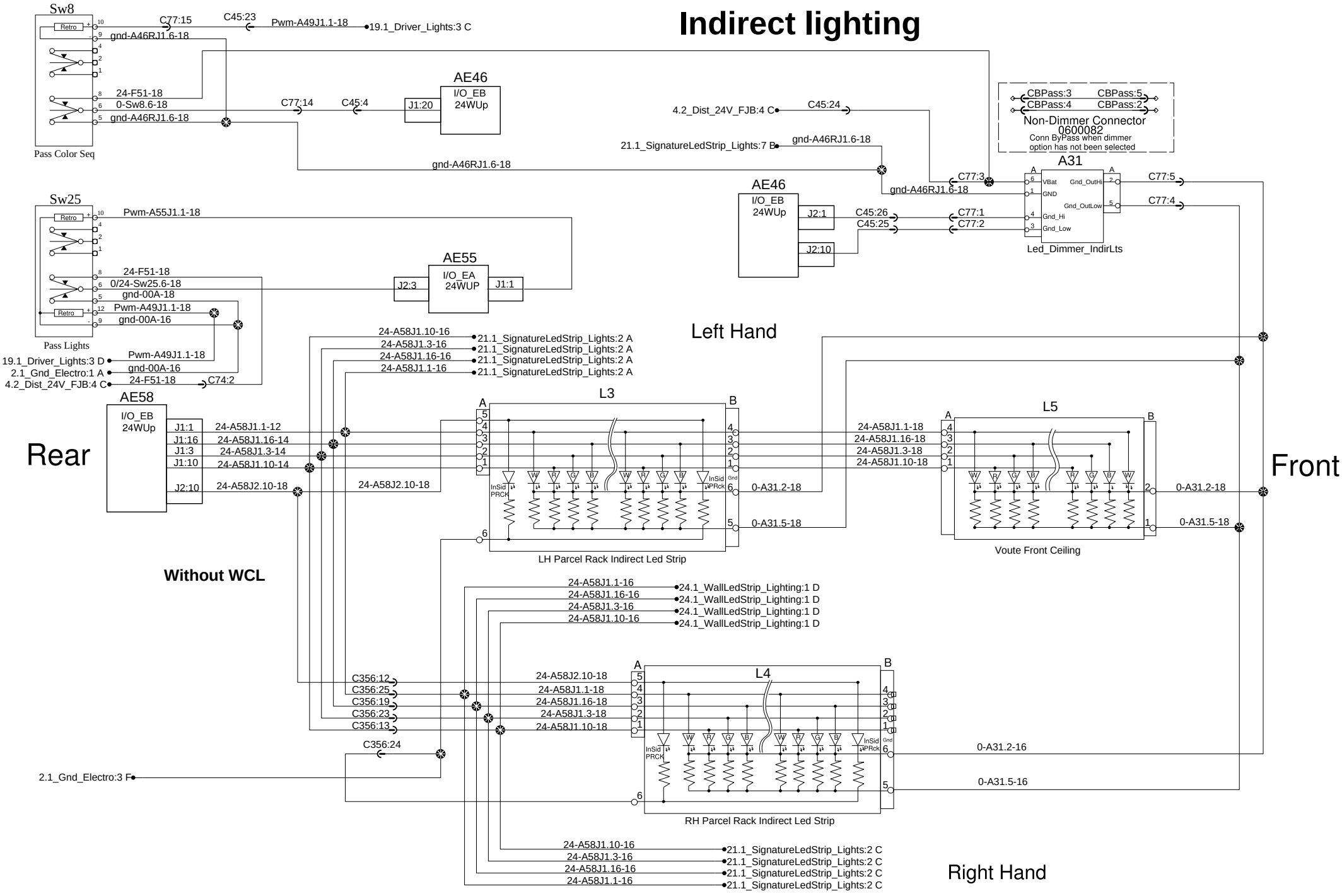

PREVOST®	WIRING DIAGRAM	No:D062140	Page:23.1	Rev:0

Indirect lighting

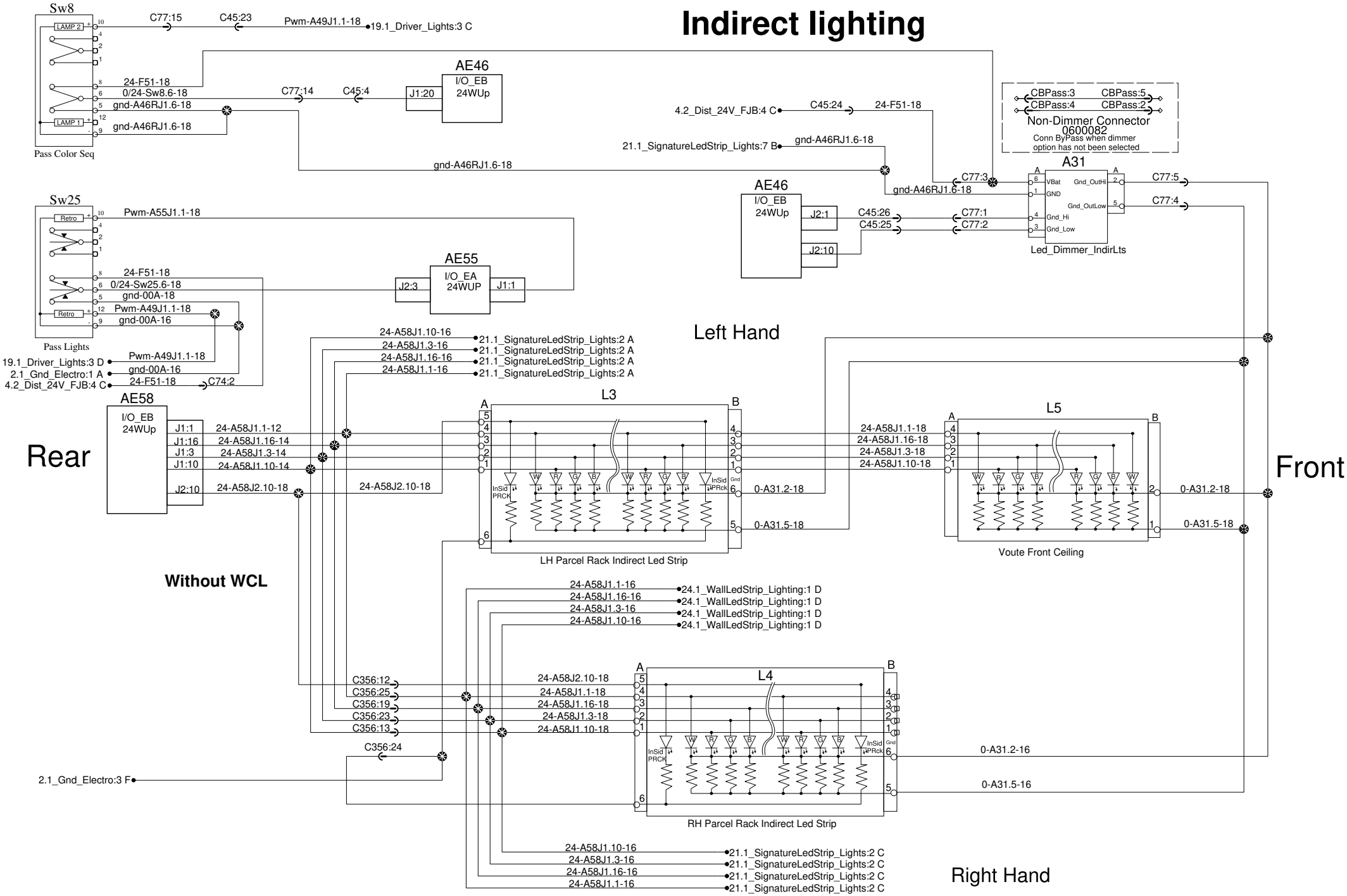

PREVOST®	WIRING DIAGRAM	No:D062140	Page:23.1	Rev:6

Wall Led Srips

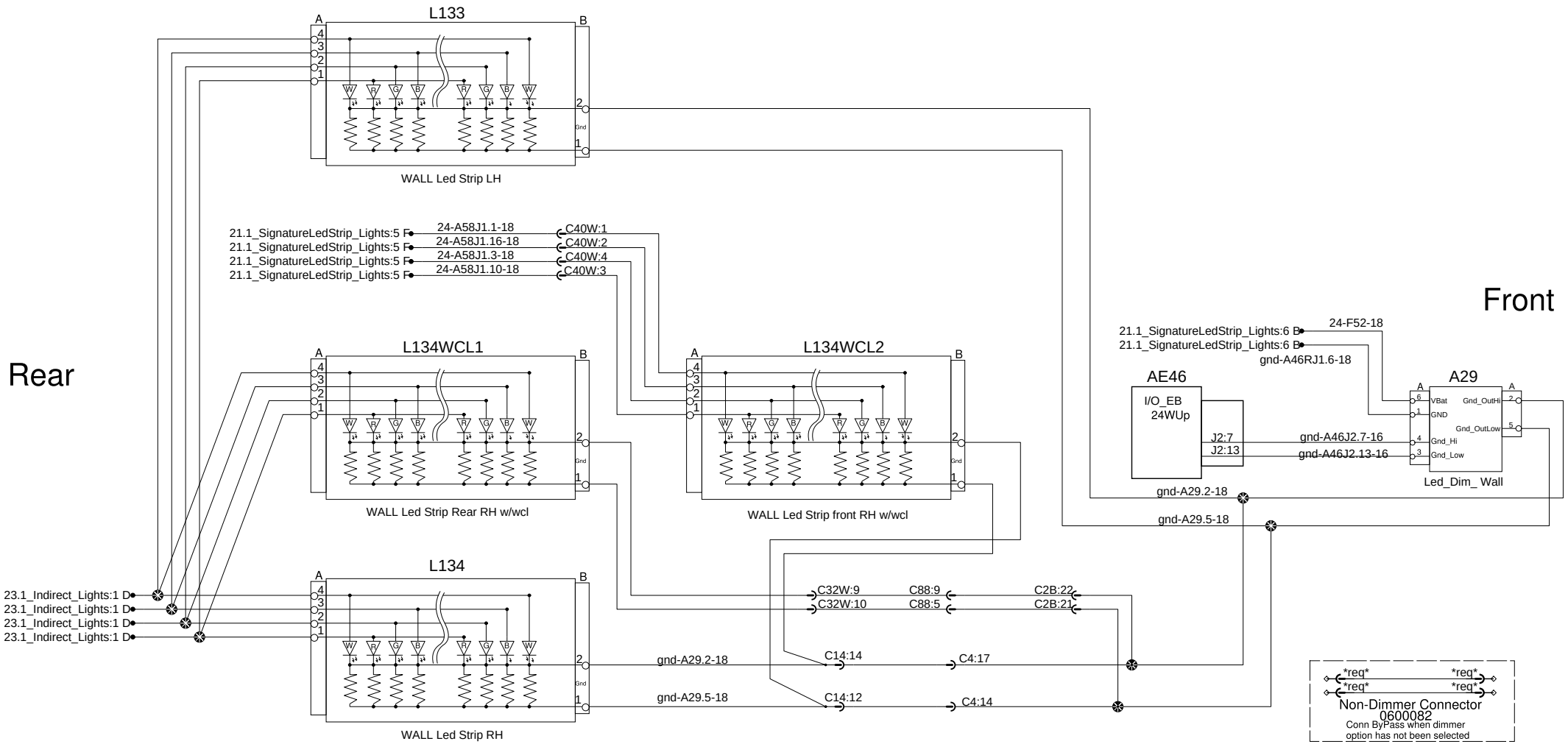

PREVOST®	WIRING DIAGRAM	No:D062140	Page:24.1	Rev:0

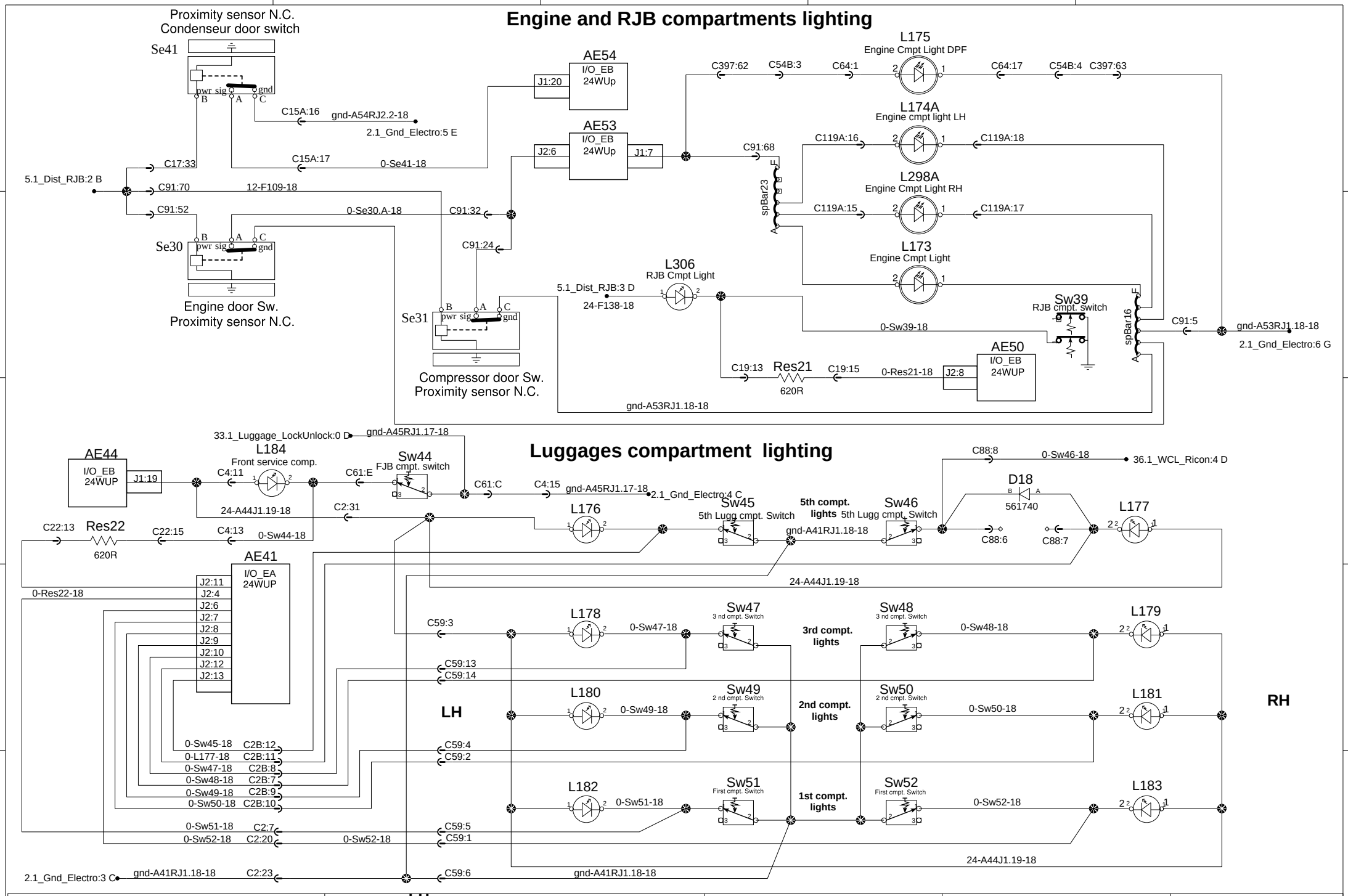

PREVOST®	LH WIRING DIAGRAM	No:D062140	Page:25.1	Rev:0

Cornering, Front flashers, Markers, Clearance and Head lights

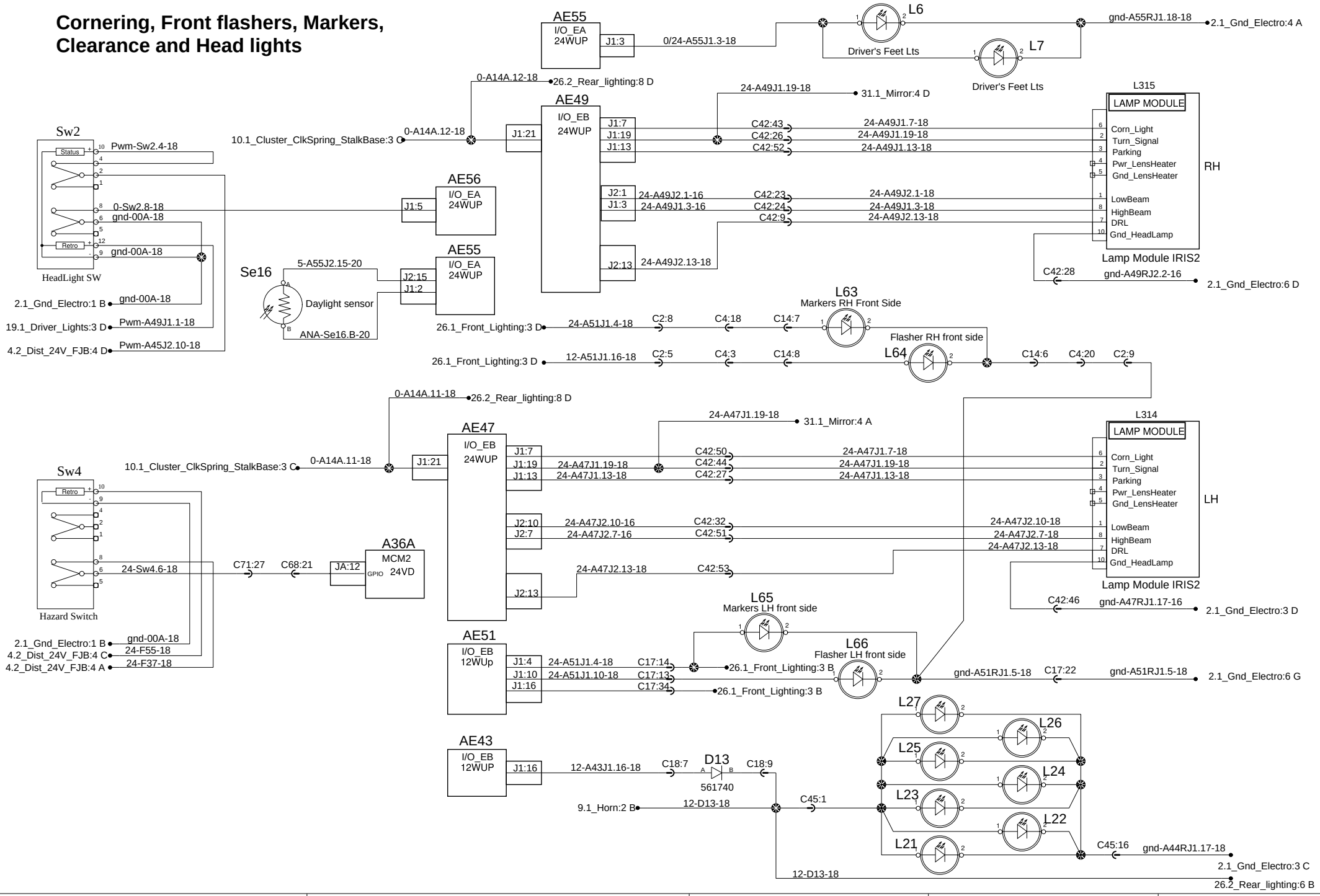

PREVOST®	WIRING DIAGRAM	No:D062140	Page:26.1	Rev:0

Cornering, Front flashers, Markers, Clearance and Head lights

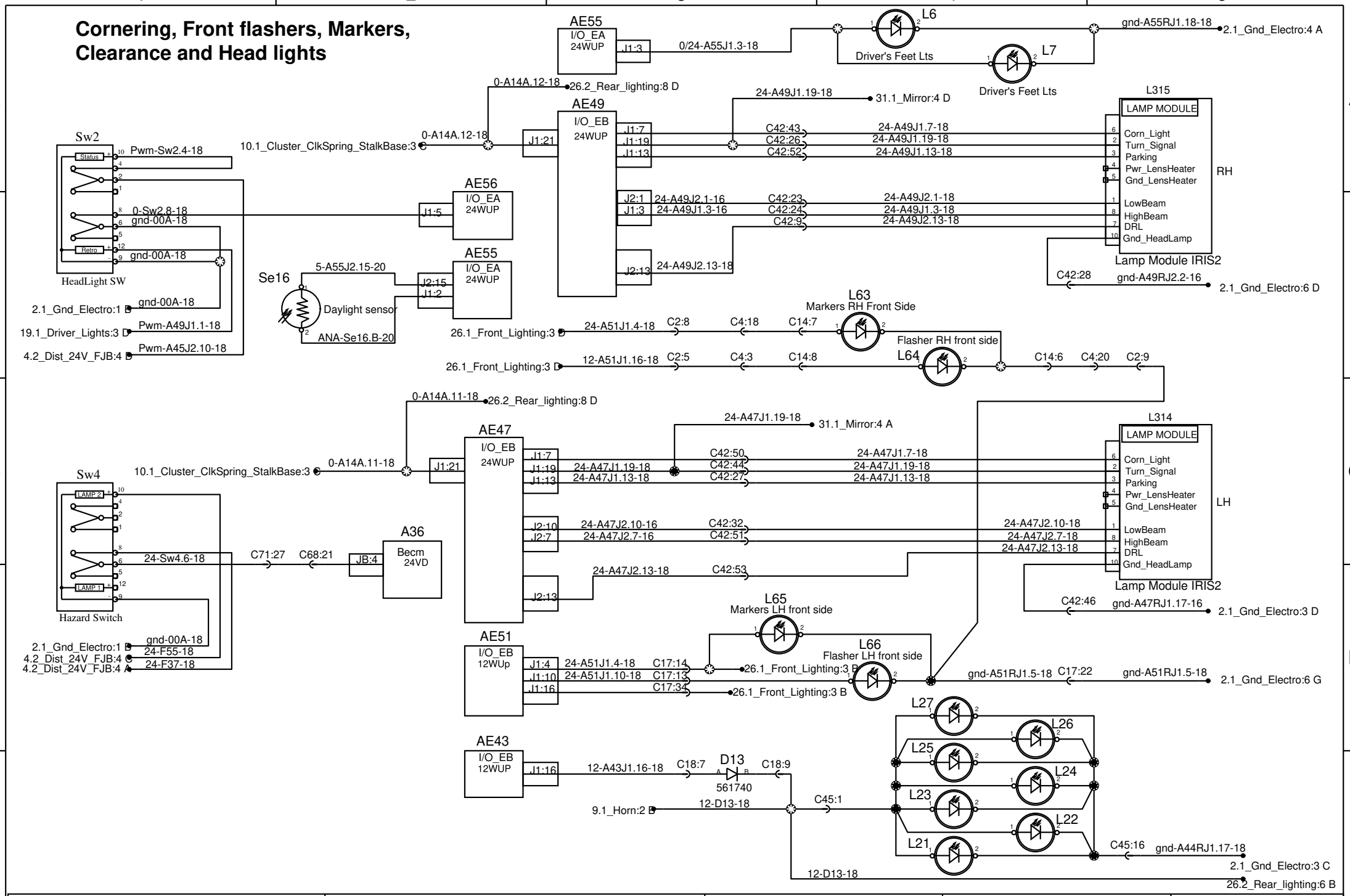

PREVOST®	WIRING DIAGRAM	No:D062140	Page:26.1	Rev:3

Cornering, Front flashers, Markers, Clearance and Head lights

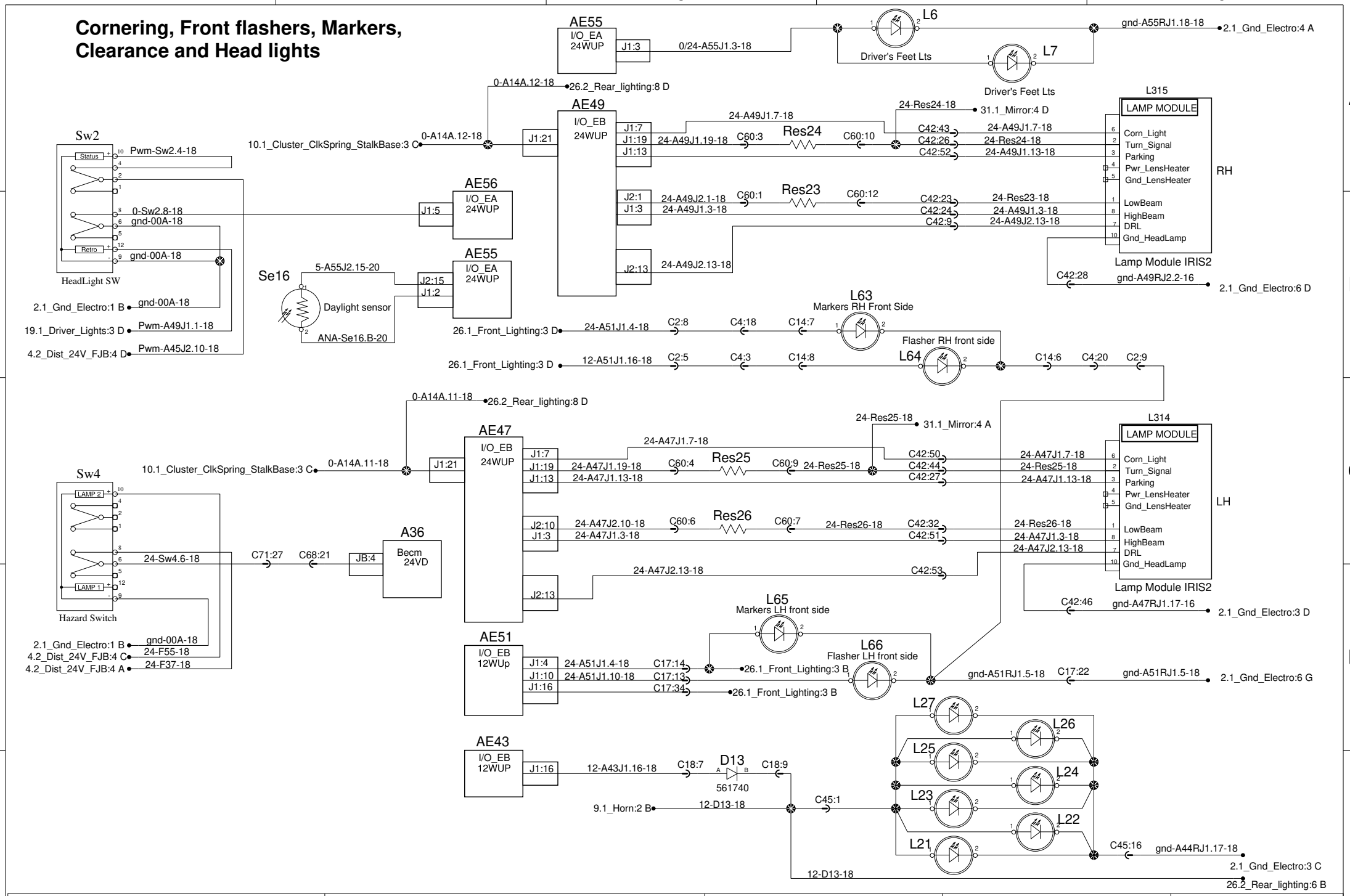

PREVOST®	WIRING DIAGRAM	No:D062140	Page:26.1	Rev:4

Rear flashers, Markers, Tail and stop lights

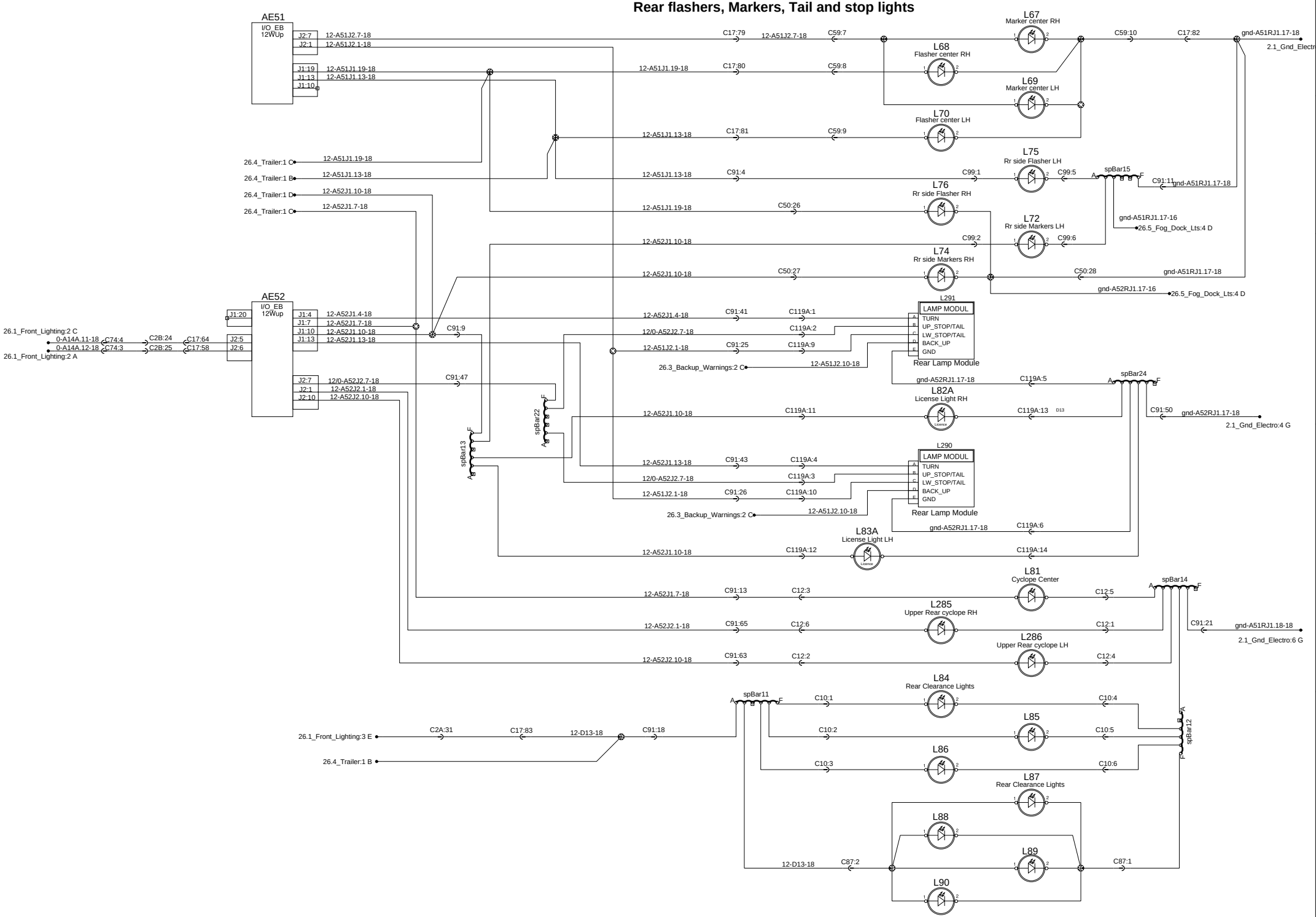

Rev:0

Page:26.2

No:D062140

WIRING DIAGRAM

PREVOST

Backup warnings

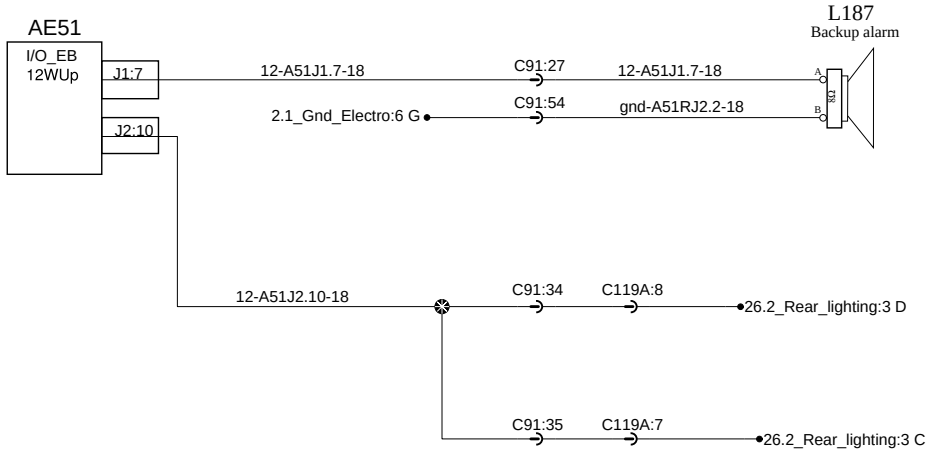

Trailer interface

SAE J560 Standard Trailer socket

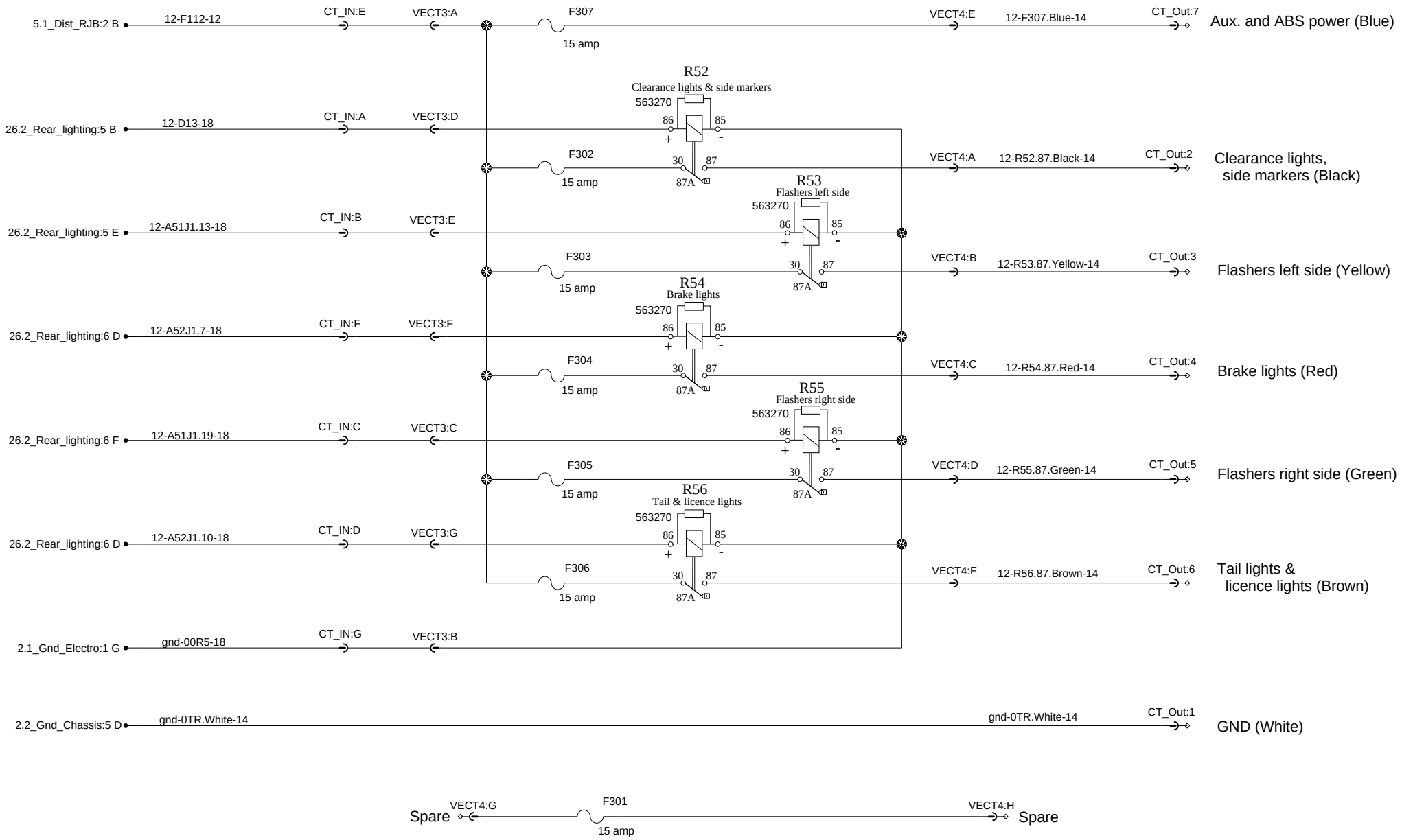

PREVOST®	WIRING DIAGRAM	No:D062140	Page:26.4	Rev:0

Trailer With Electrical Brake Interface

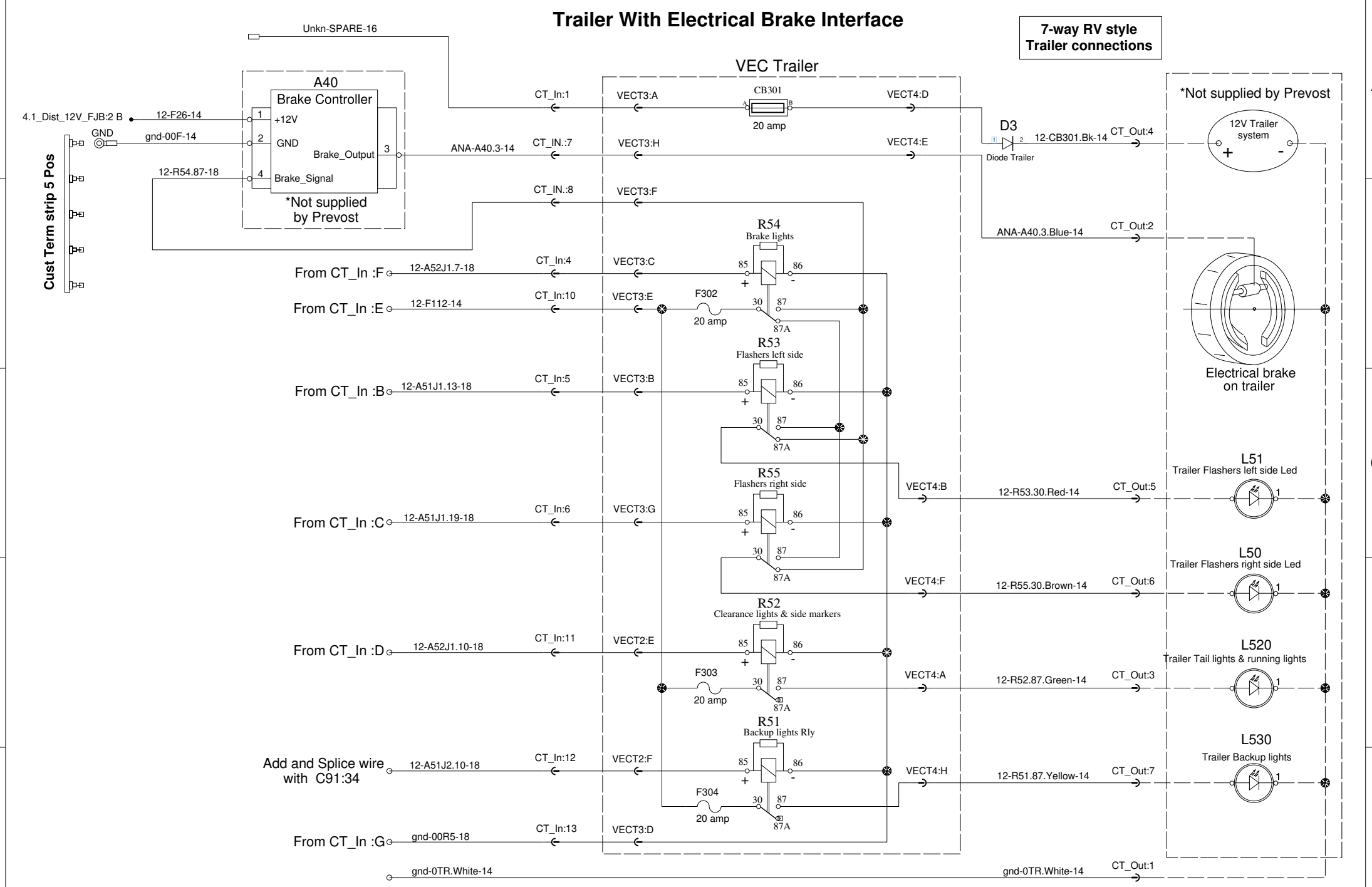

PREVOST®	WIRING DIAGRAM	No:D062140	Page:26.4SP1	Rev:1

Docking and Fog lights (Option)

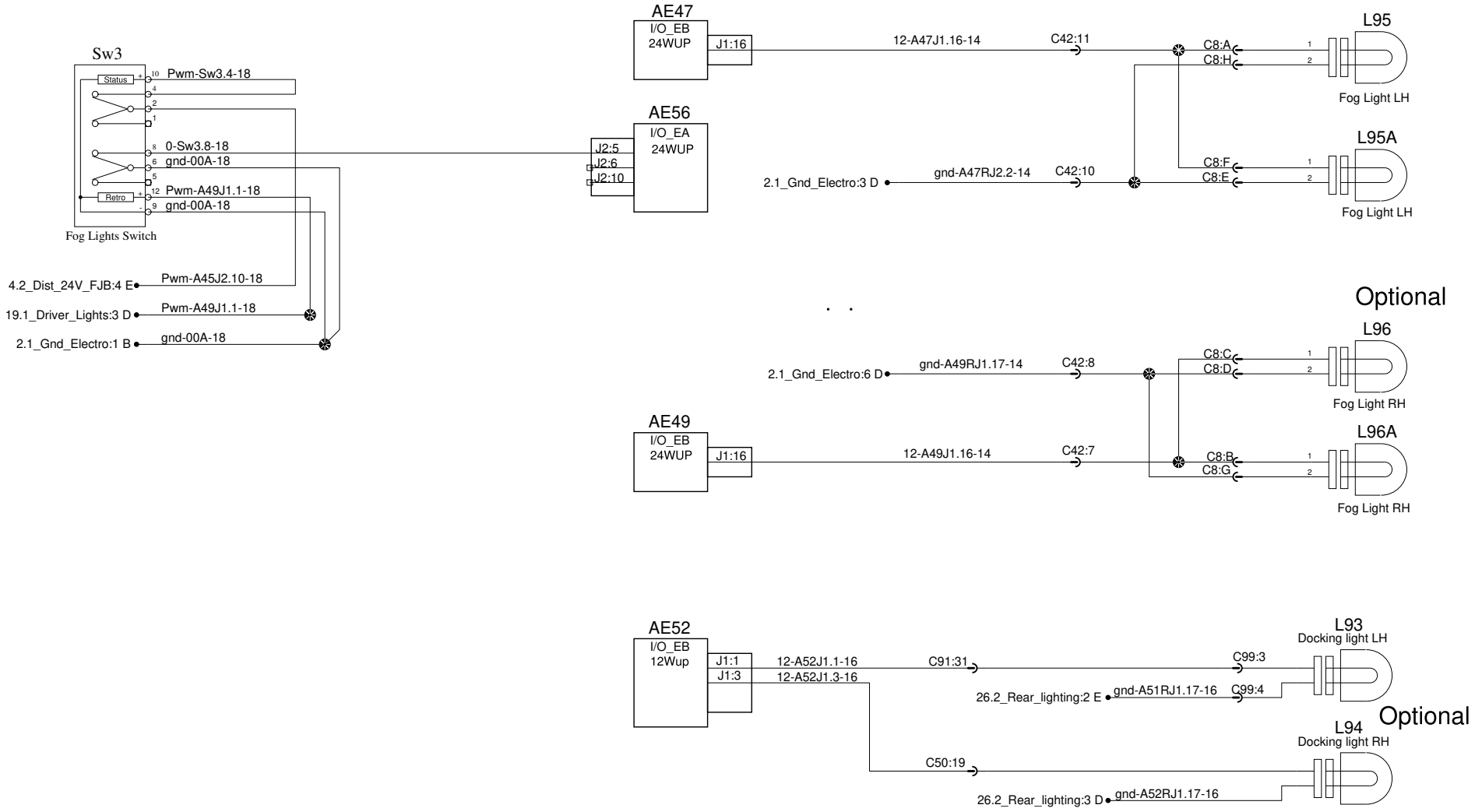

PREVOST®	WIRING DIAGRAM	No:D062140	Page:26.5	Rev:3

Curb lights on both side of the coach

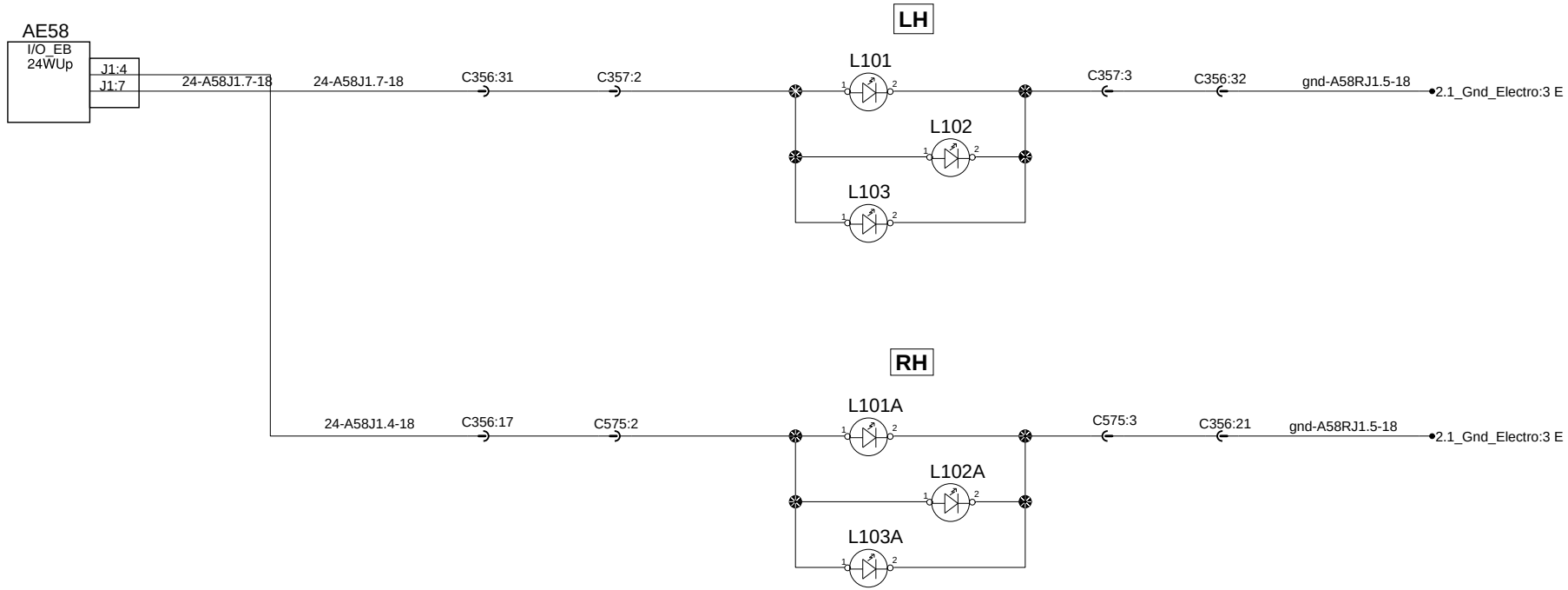

Perimeter lights on both side of the coach

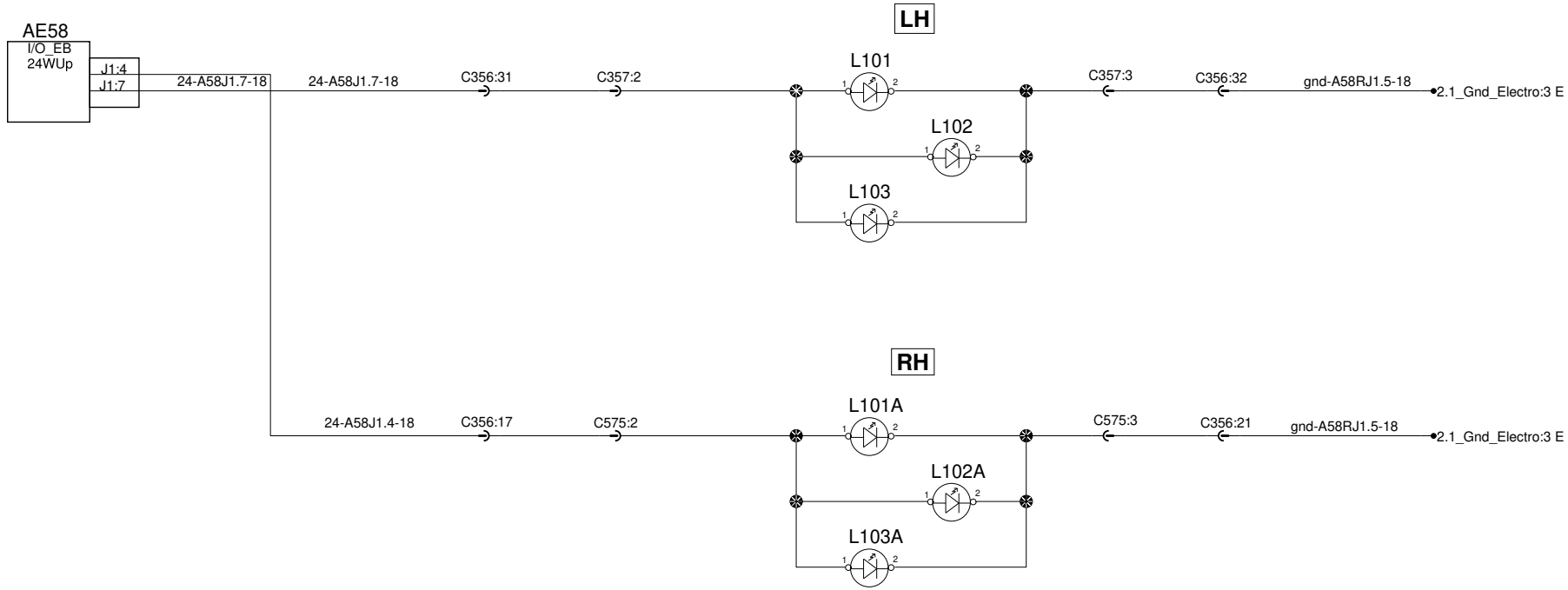

Windows ajar

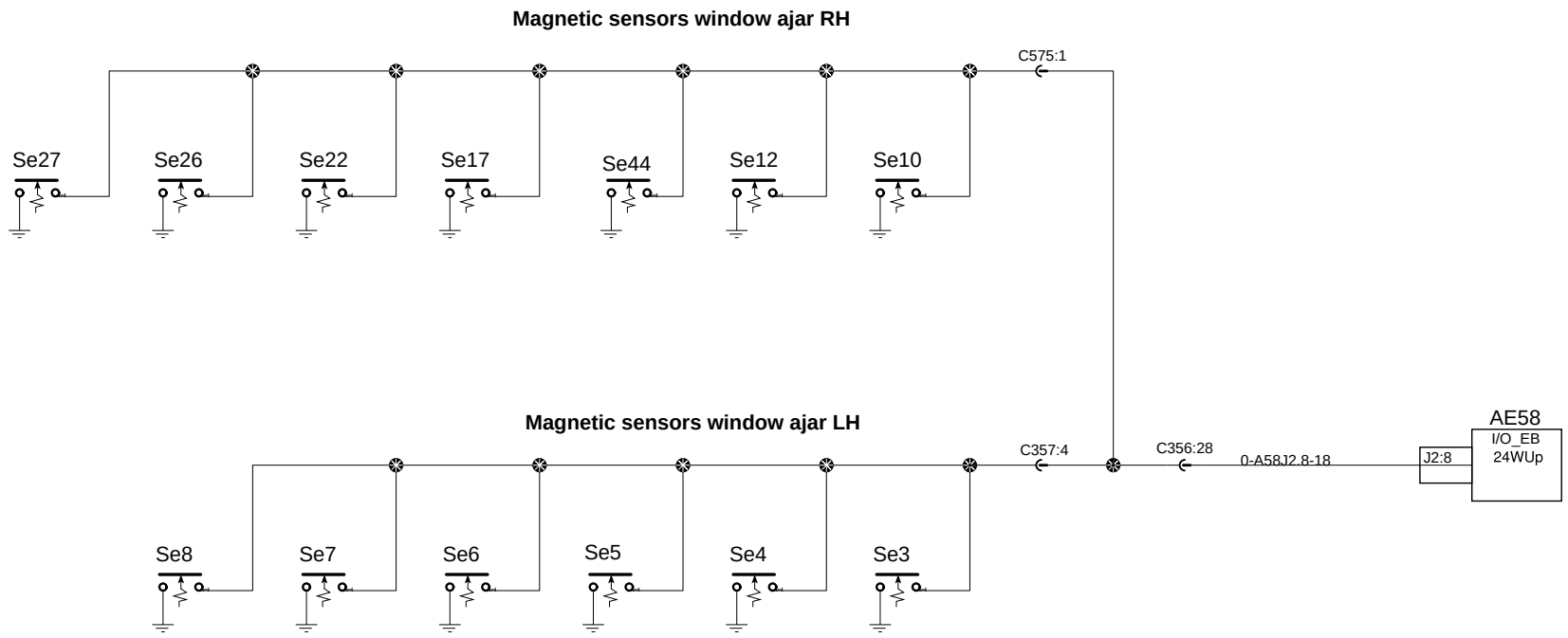

Digital clock & Back-up Camera

12 or 24 hours digital clock

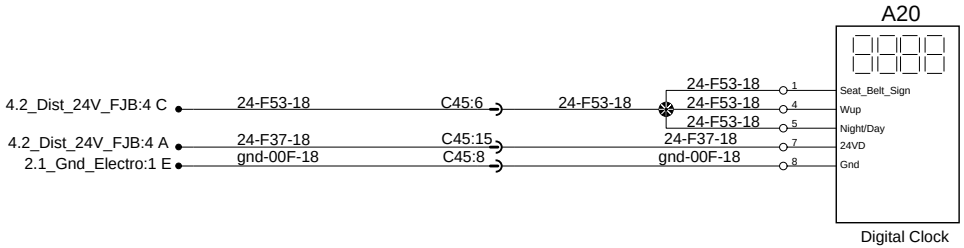

Back-up camera

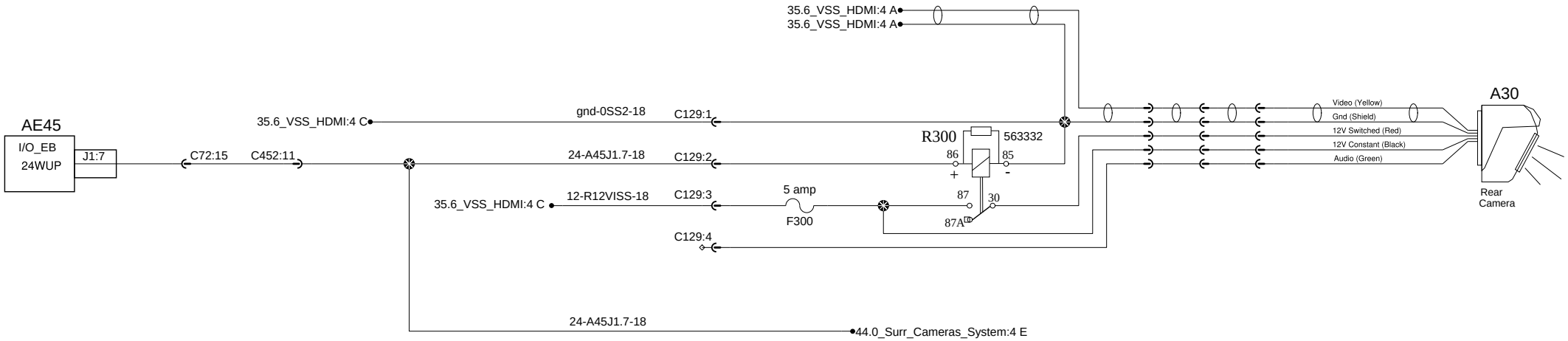

PREVOST®	WIRING DIAGRAM	No:D062140	Page:28.1	Rev:0

Electronic destination signs

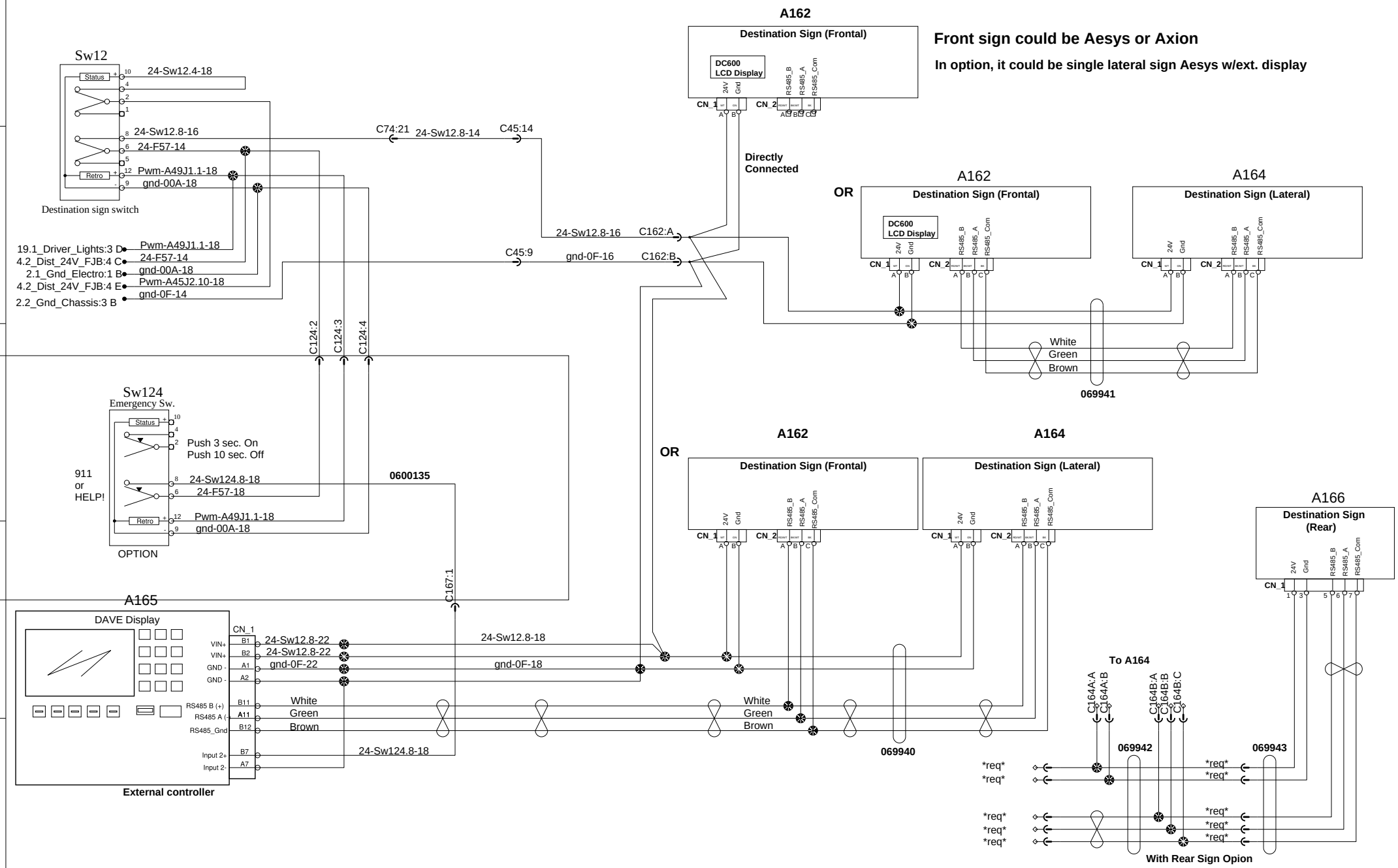

PREVOST®	WIRING DIAGRAM	No:D062140	Page:28.2	Rev:0

Cornering, Front flashers, Markers, Clearance and Head lights

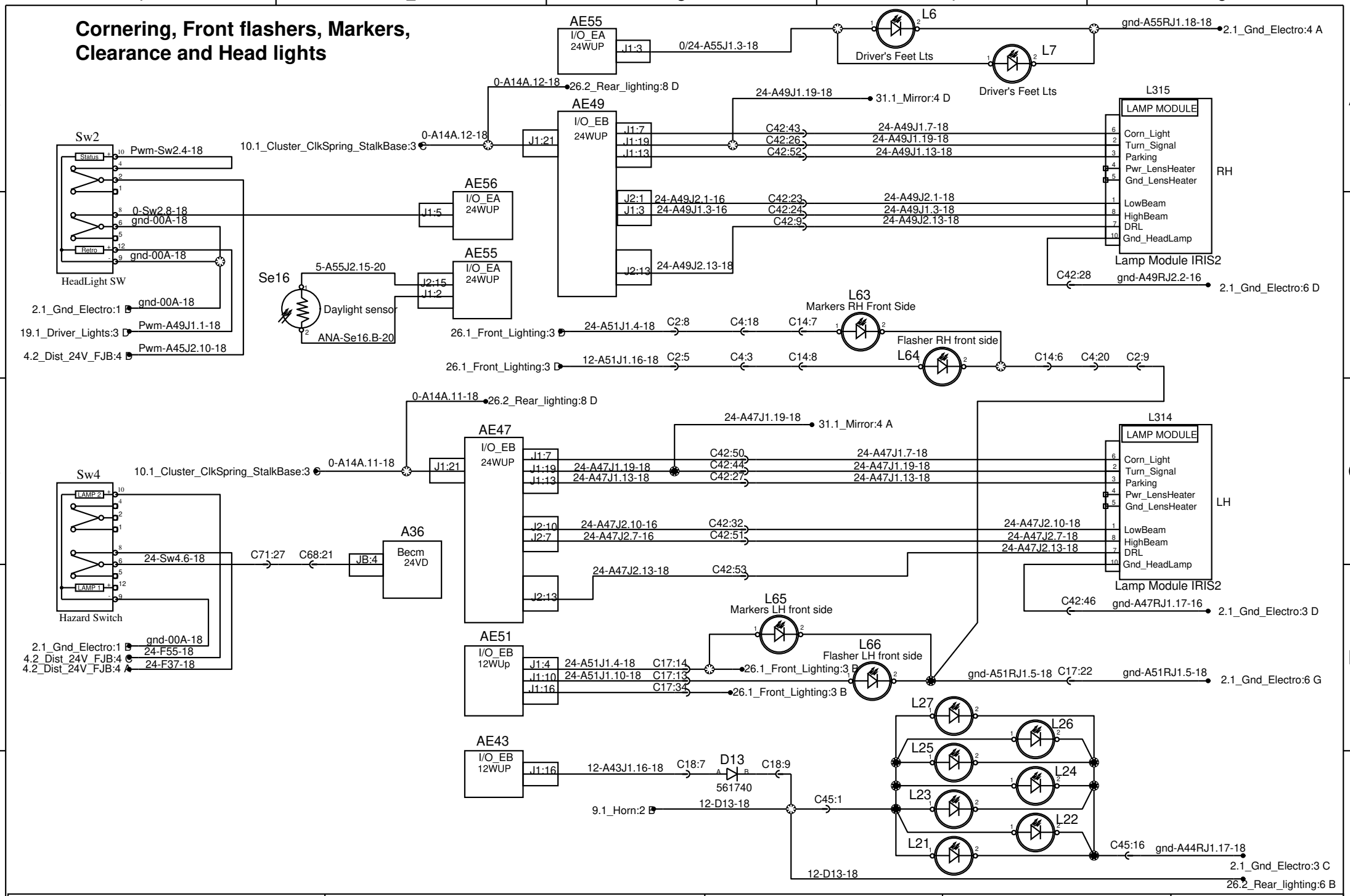

PREVOST®	WIRING DIAGRAM	No:D062140	Page:26.1	Rev:3

Entrance Step lights

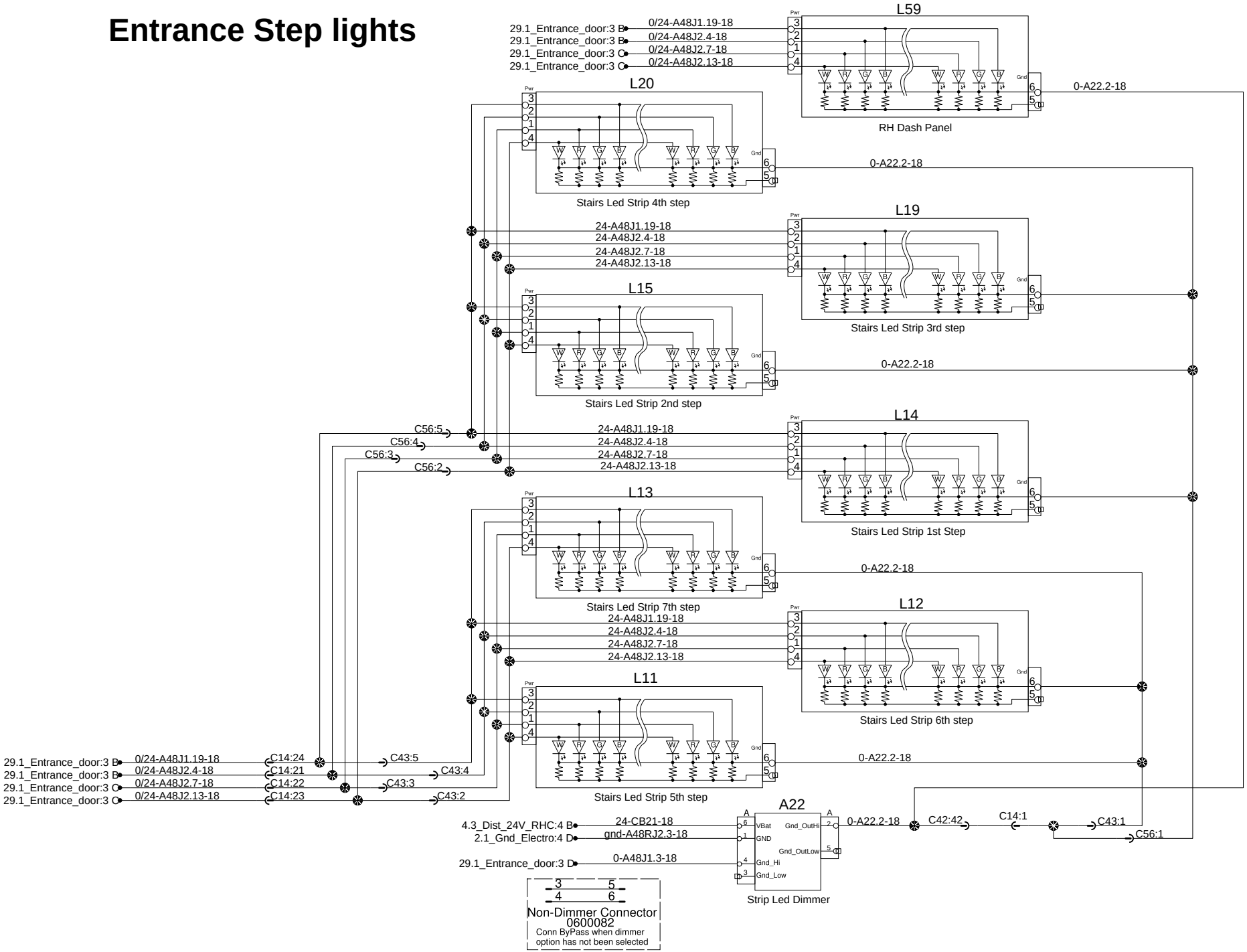

PREVOST®	WIRING DIAGRAM	No:D062140	Page:29.2	Rev:0

Driver Window

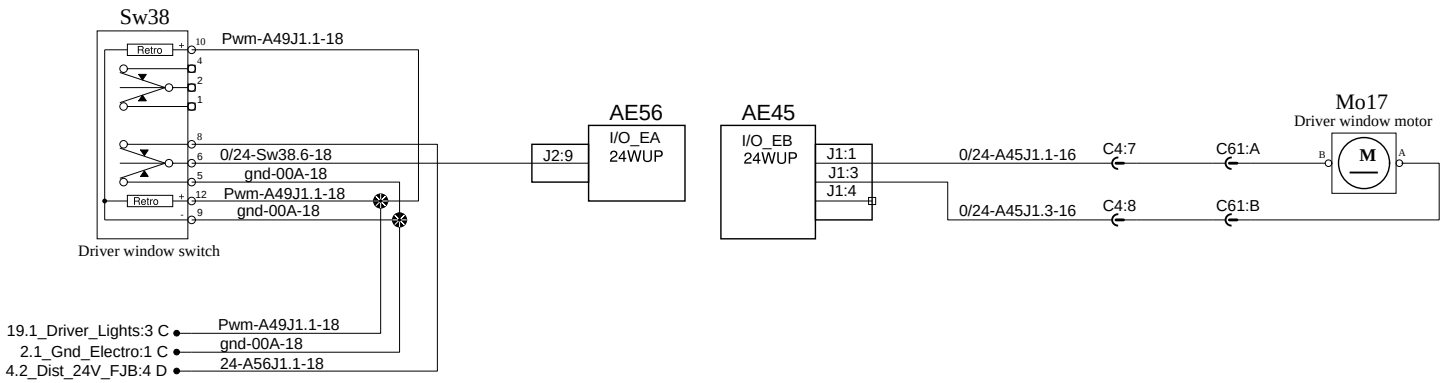

12V Outlets and USB Charger

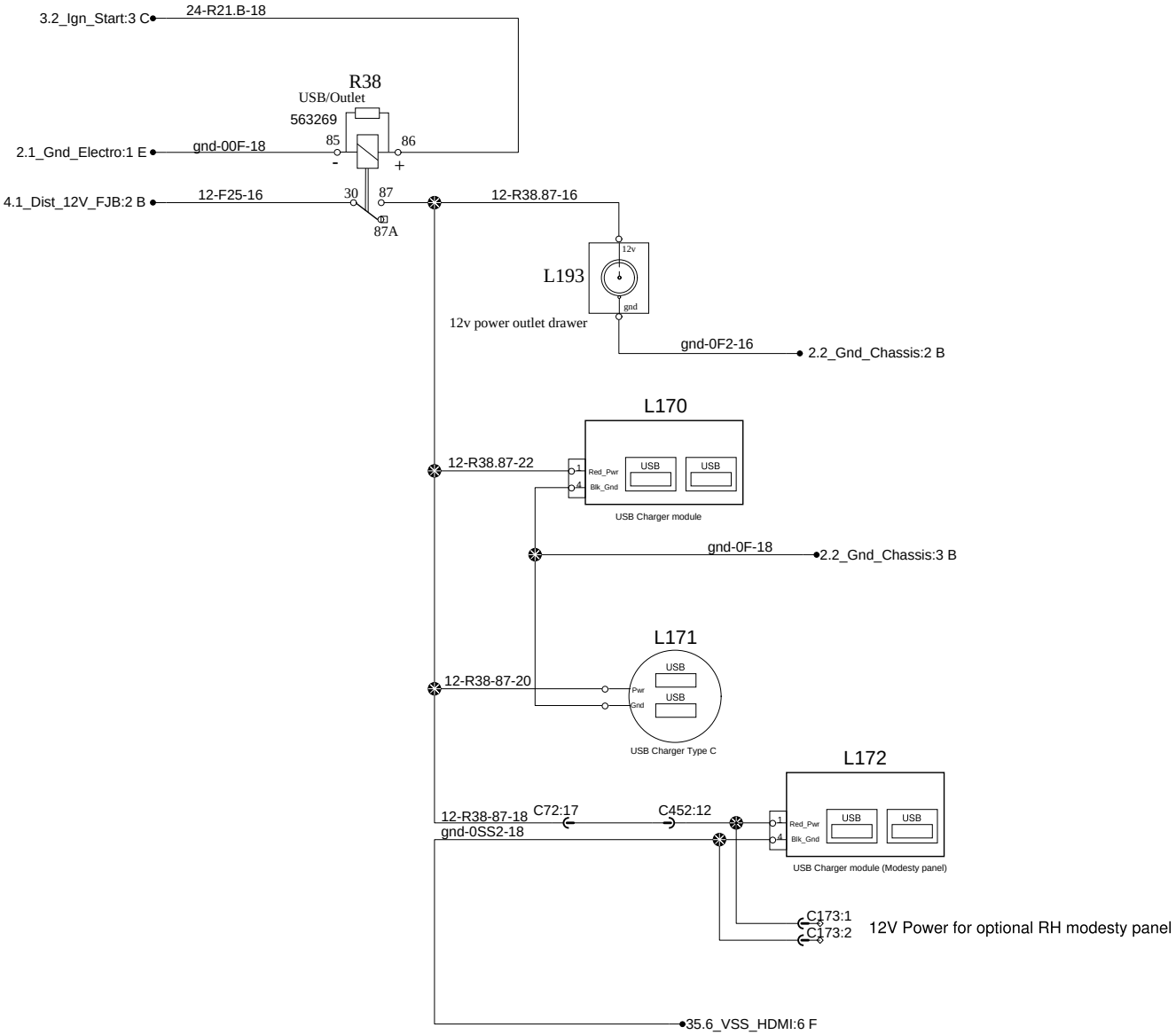

Driver seat with heating function

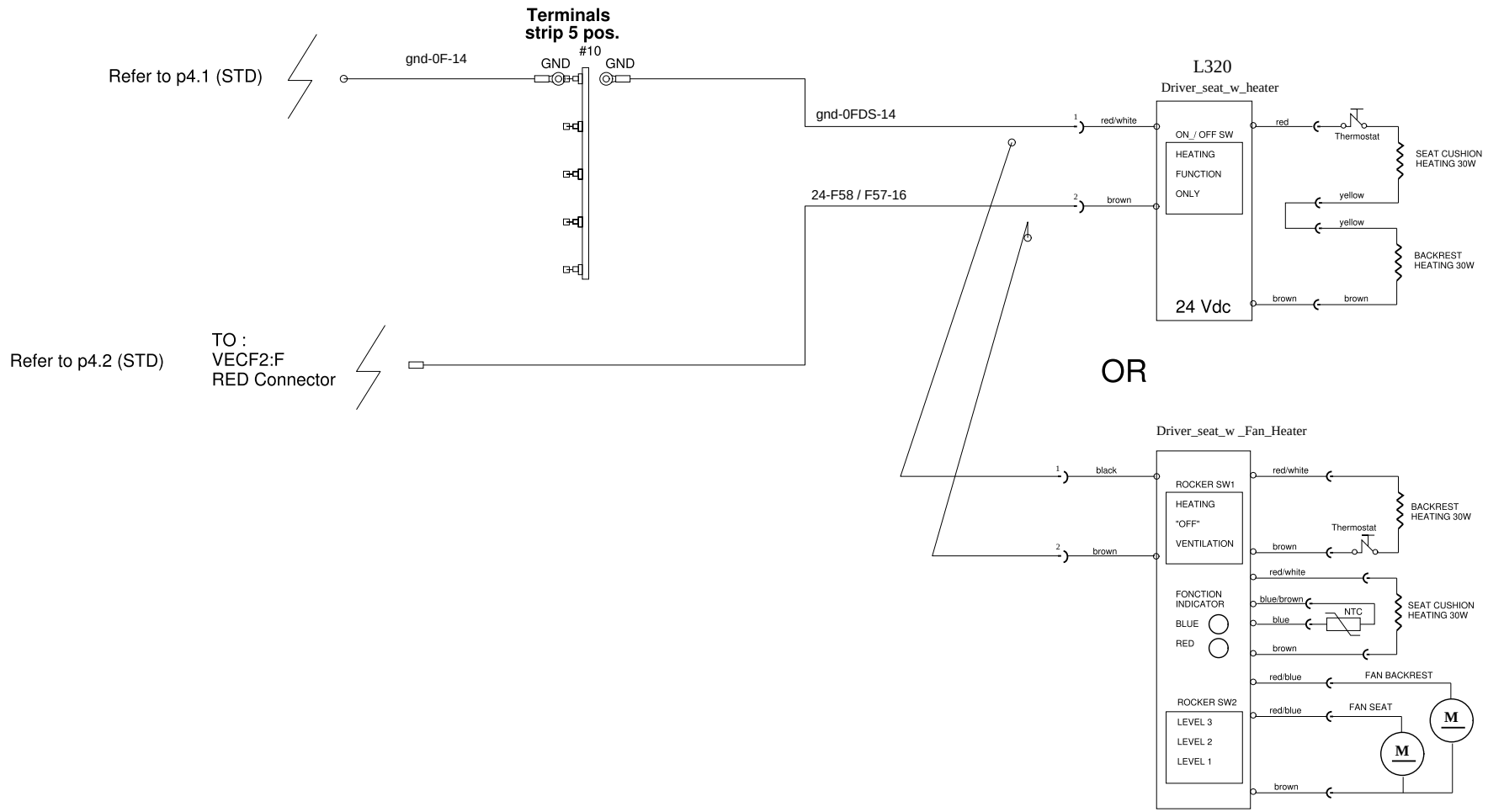

PREVOST®	WIRING DIAGRAM	No:D062140	Page:30.3	Rev:01

Mirrors, 2 adjustments switch and heated

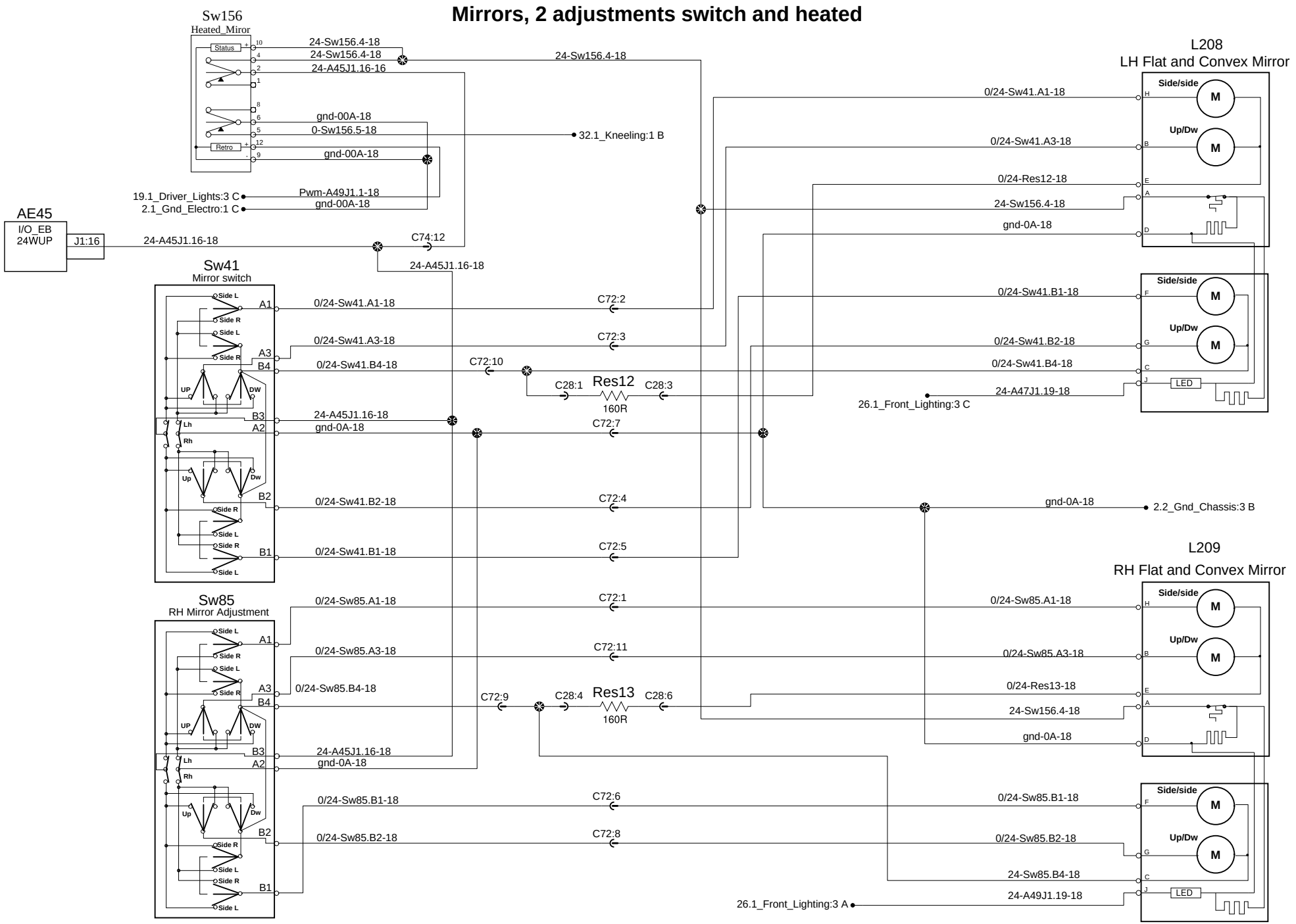

PREVOST®	WIRING DIAGRAM	No:D062140	Page:31.1	Rev:0

Mirrors, 2 adjustments switch and heated

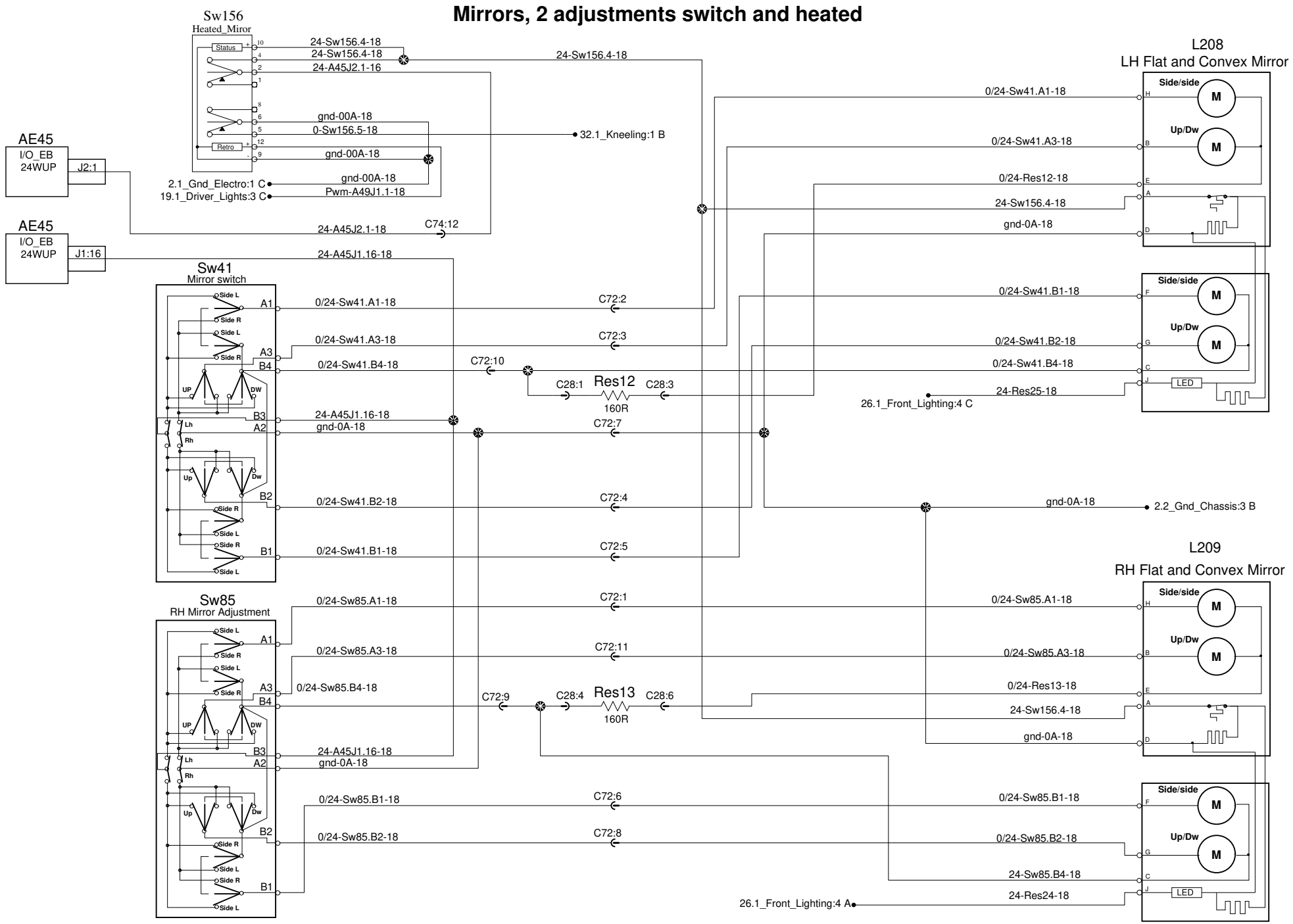

PREVOST®	WIRING DIAGRAM	No:D062140	Page:31.1	Rev:5

Electronic Mirrors (eMirrors)

Info: Mirrors remains ON about 2 minutes after Ignition key turn OFF

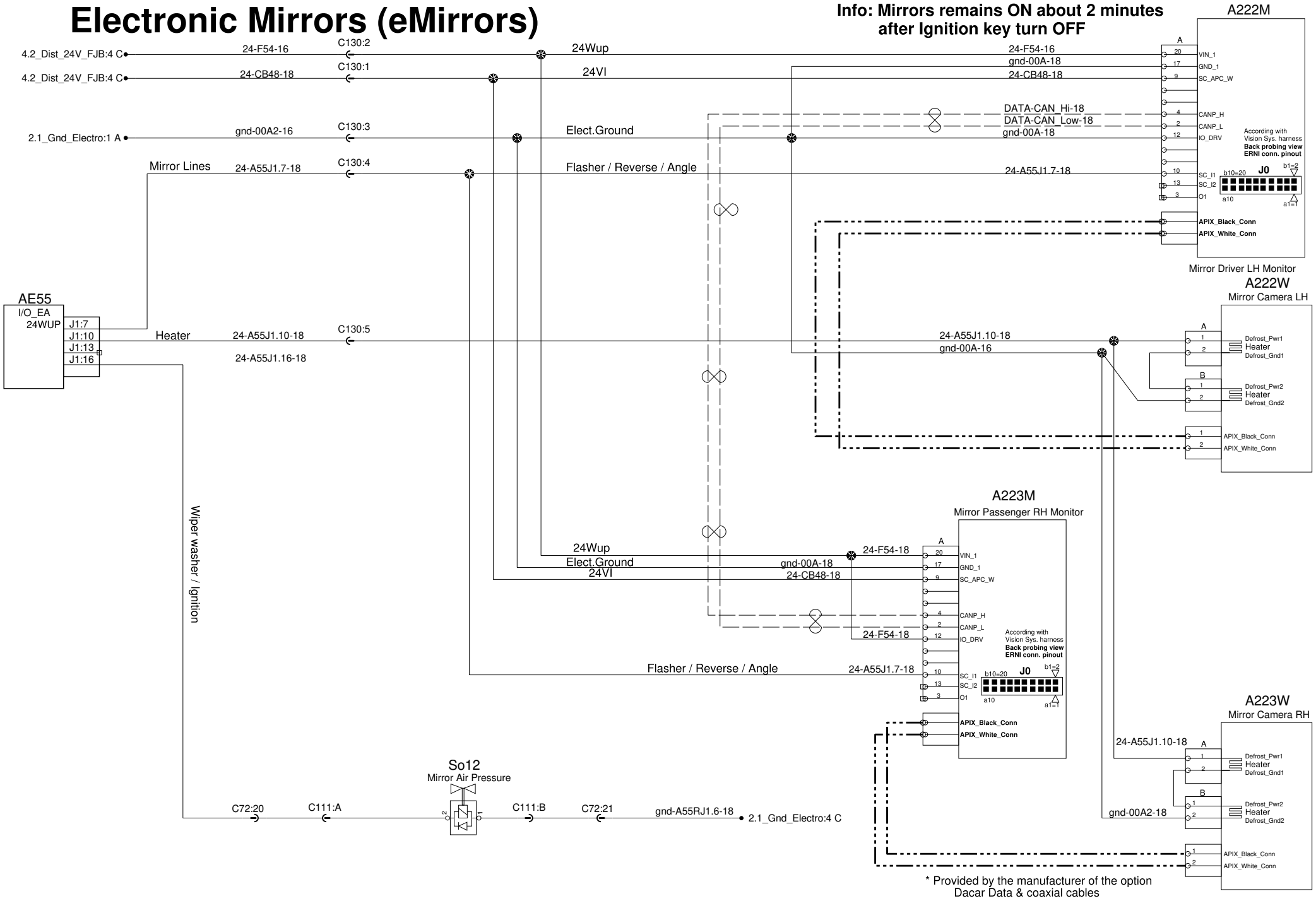

* Provided by the manufacturer of the option
Dacar Data & coaxial cables

PREVOST®	WIRING DIAGRAM	No:D062140	Page:31.2	Rev:1

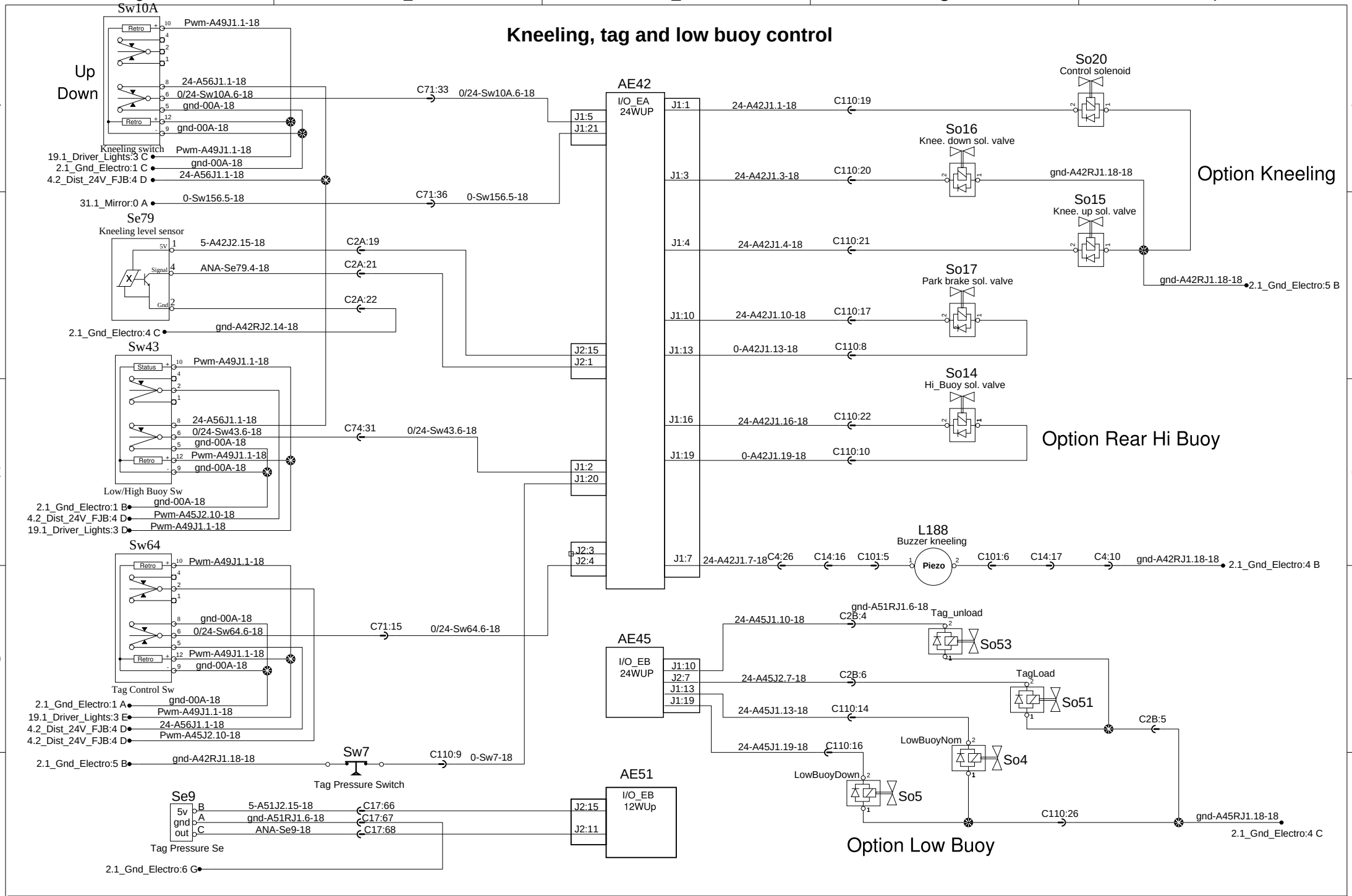

PREVOST®	WIRING DIAGRAM	No:D062140	Page:32.1	Rev:0

Luggage door Lock/Unlock

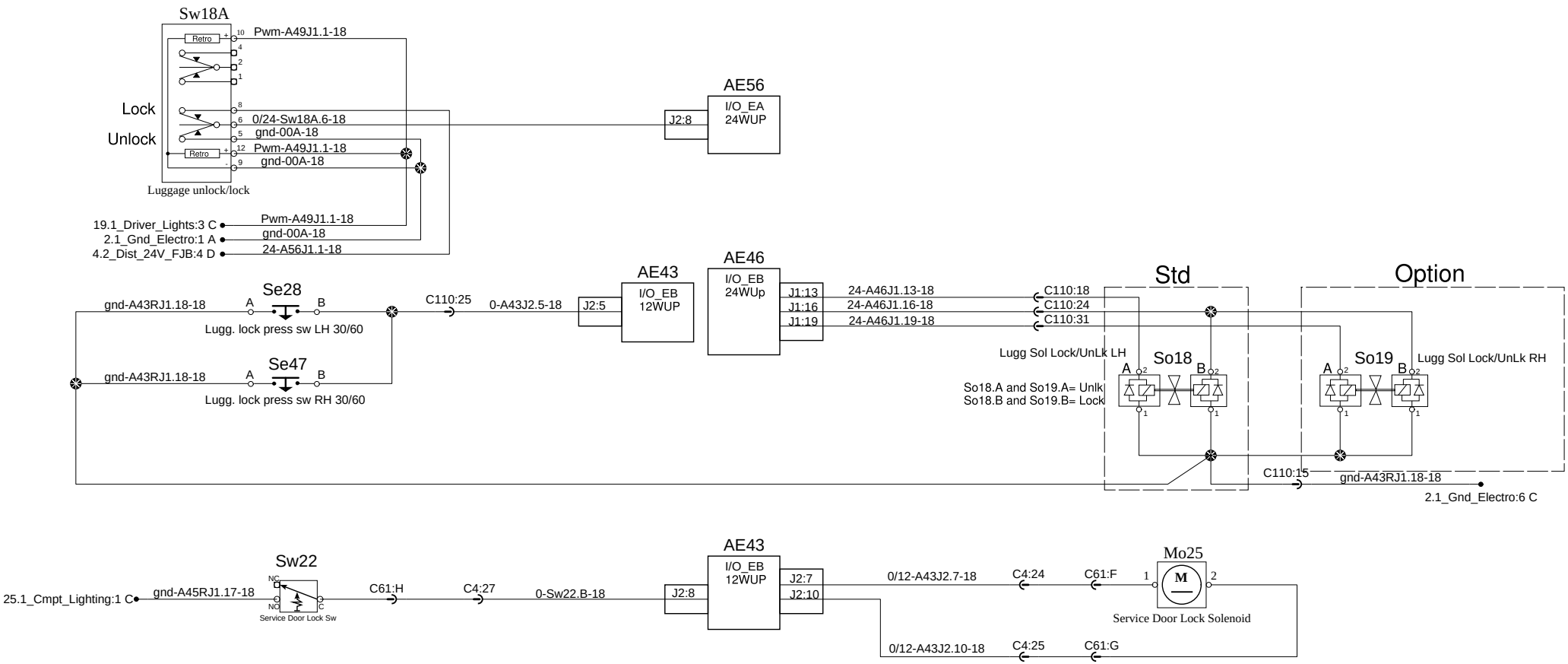

Wipers and washer

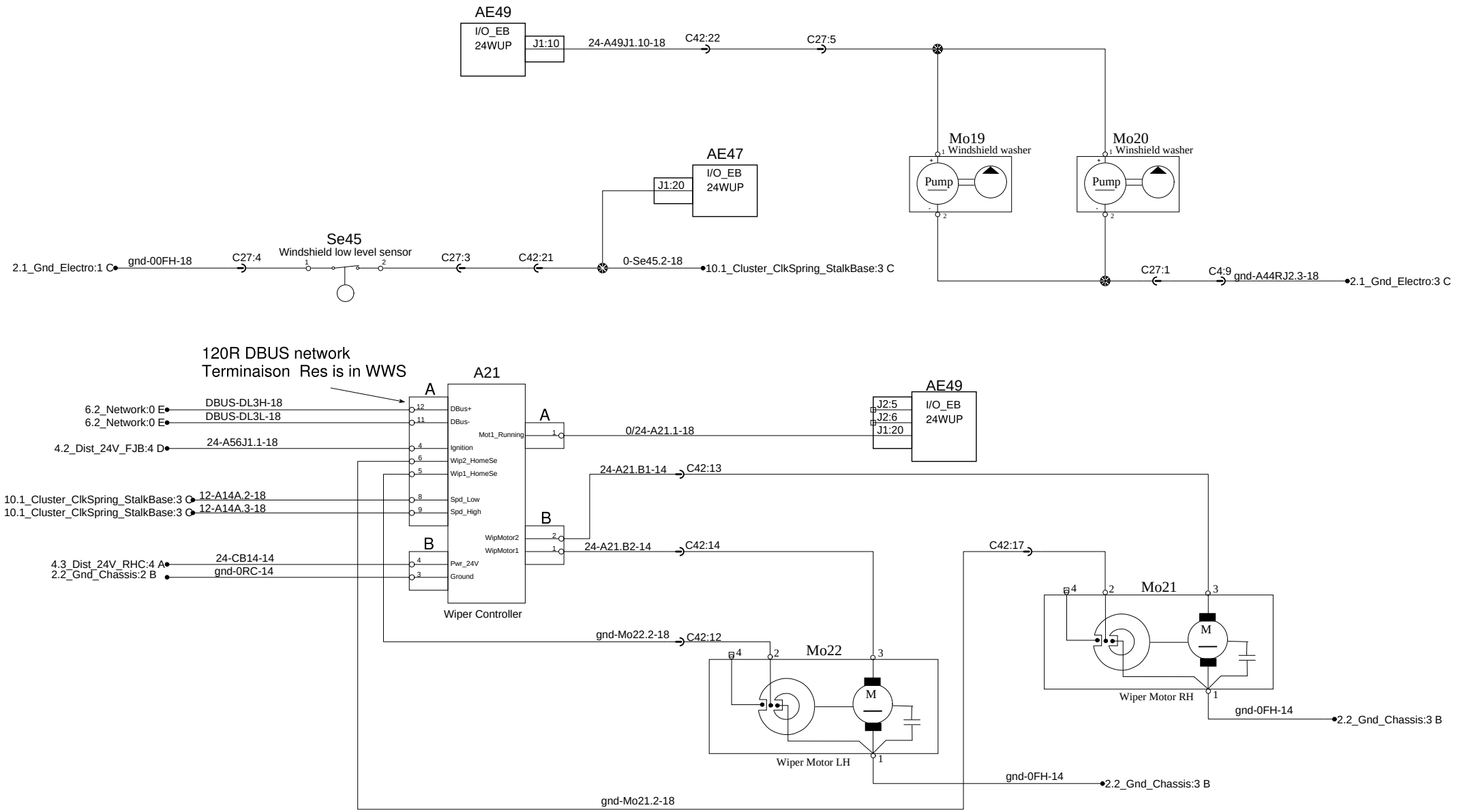

PREVOST®	WIRING DIAGRAM	No:D062140	Page:34.1	Rev:0

Wipers and washer

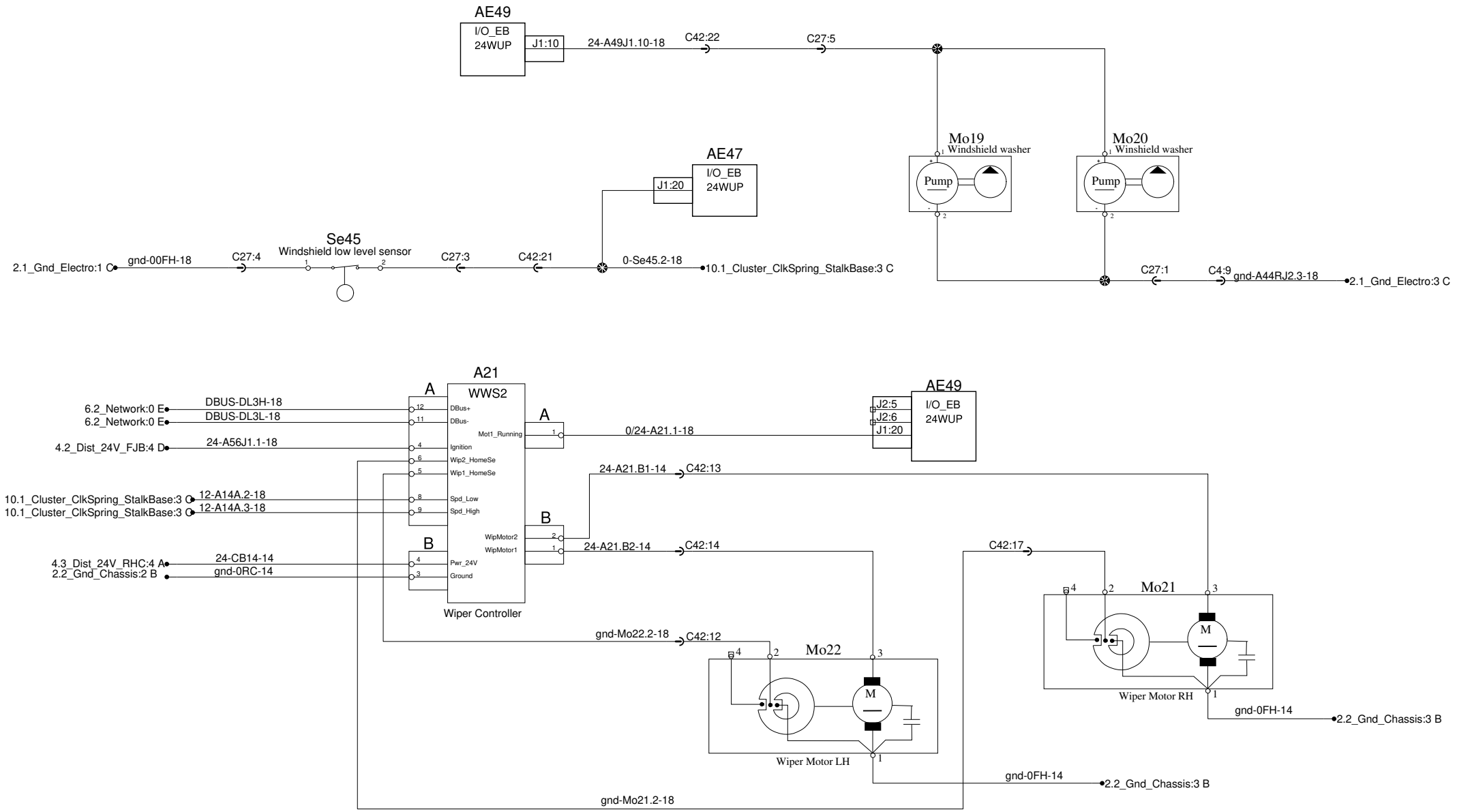

PREVOST®	WIRING DIAGRAM	No:D062140	Page:34.1	Rev:3-5

Speakers arrangement (Delta configuration)

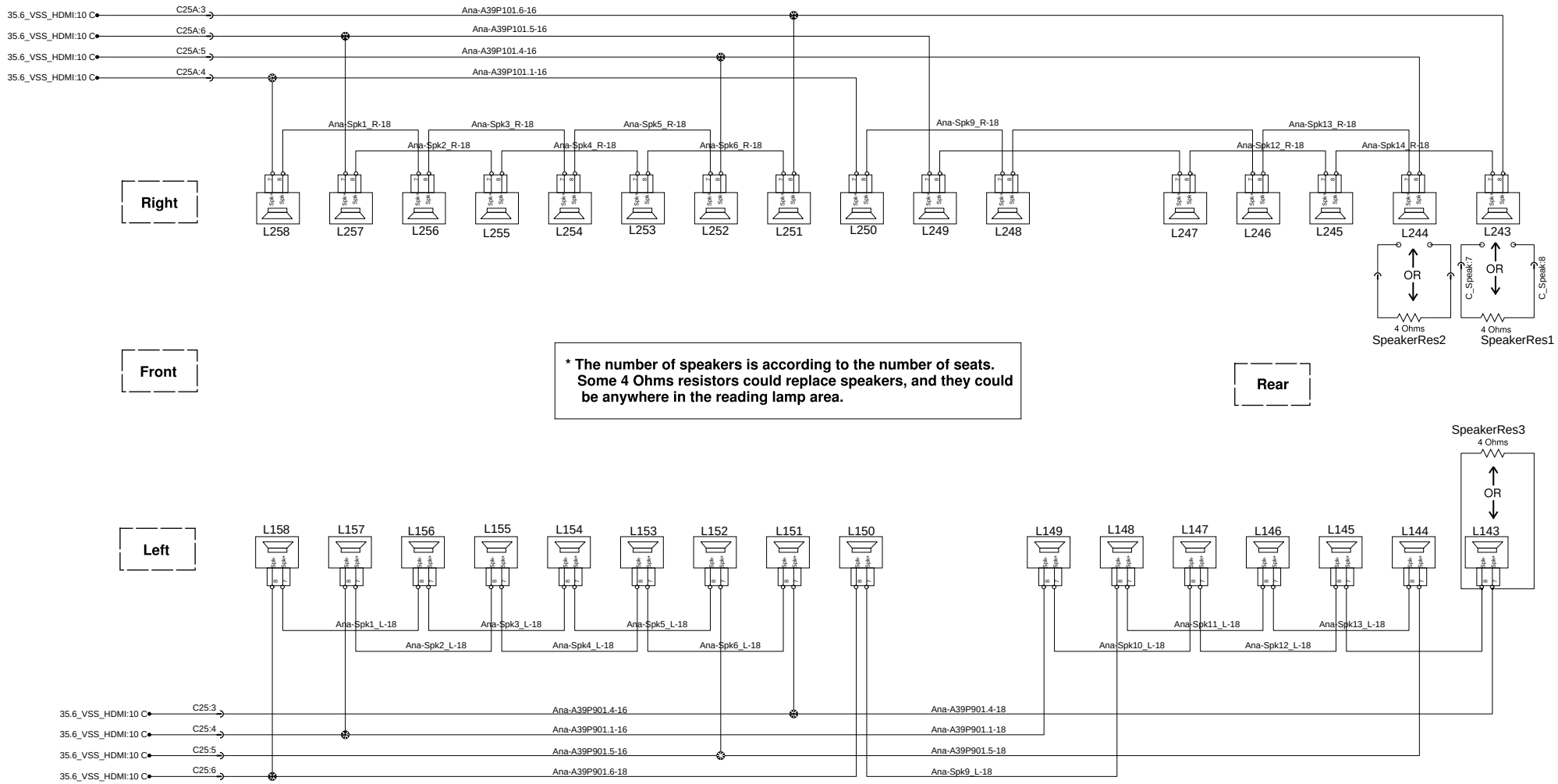

*** The number of speakers is according to the number of seats. Some 4 Ohms resistors could replace speakers, and they could be anywhere in the reading lamp area.**

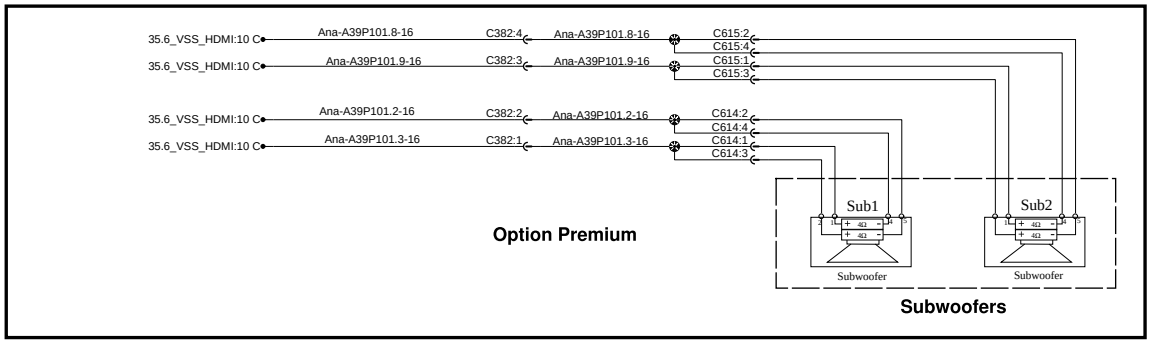

Rev:0

Page:35.2

No:D062140

WIRING DIAGRAM

PREVOST®

Video distribution HDMI

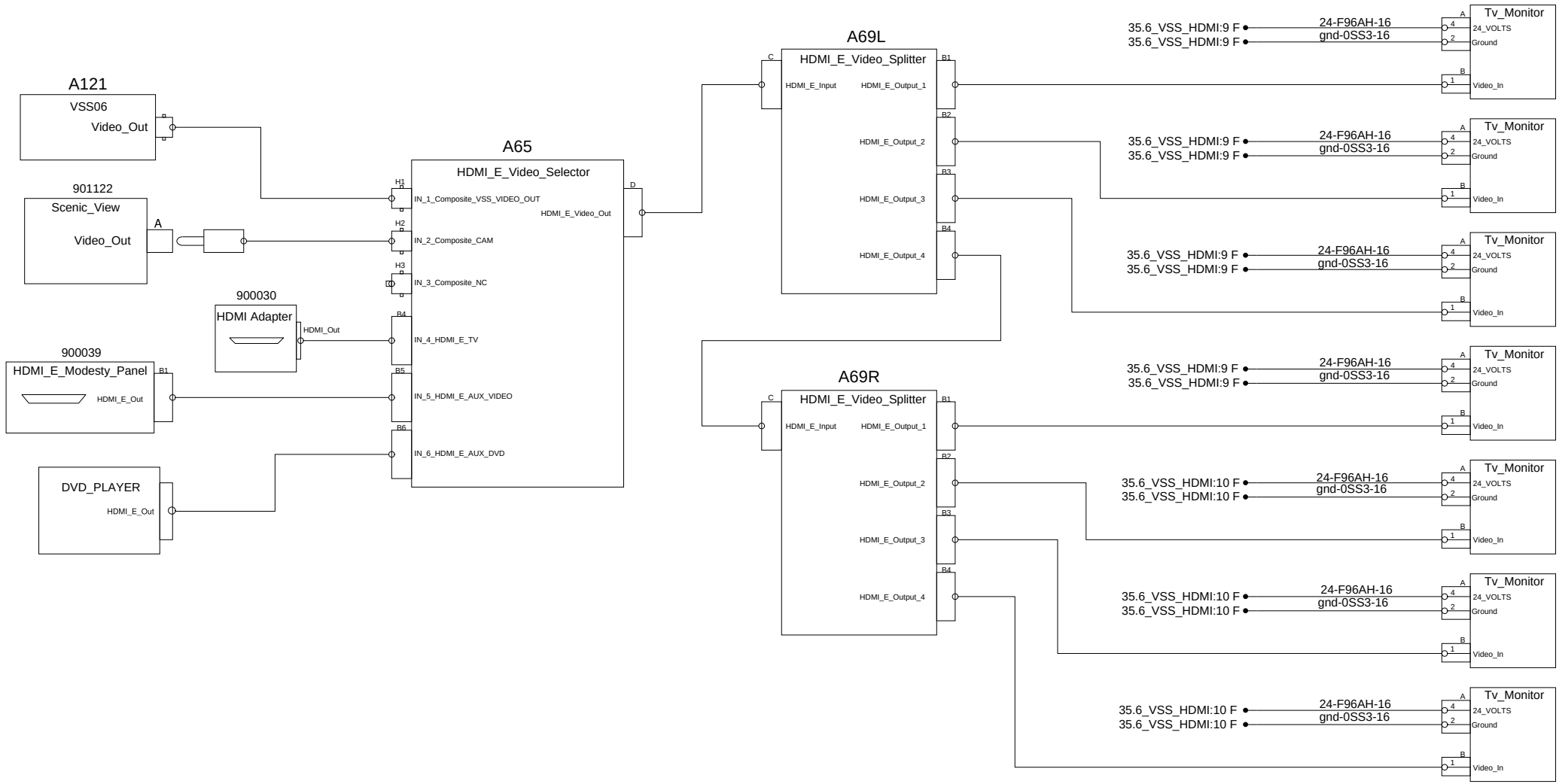

PREVOST®	WIRING DIAGRAM	No:D062140	Page:35.3	Rev:0

AUDIO VIDEO SYSTEM

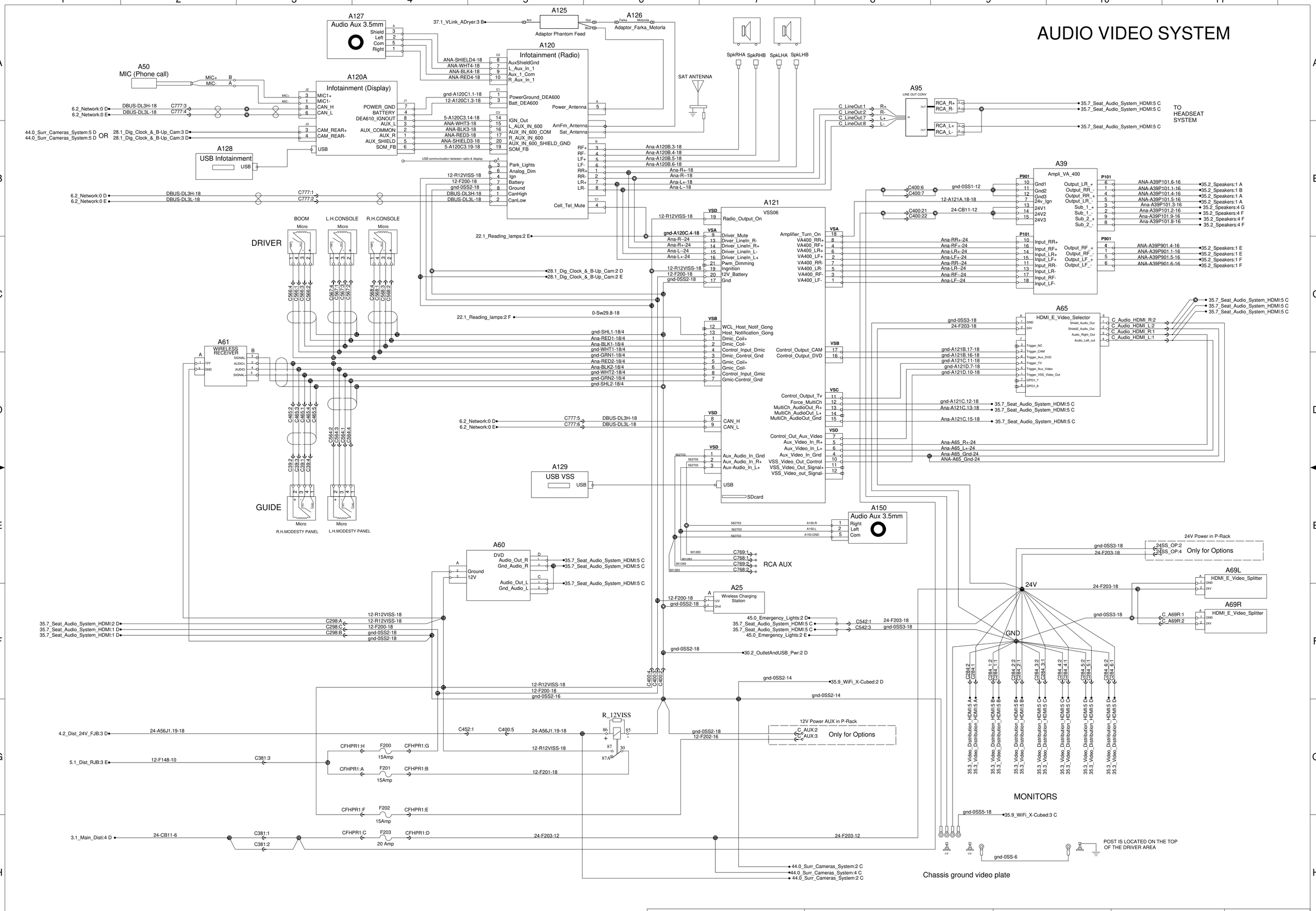

PREVOST®	WIRING DIAGRAM	No:D062140	Page:35.6	Rev:02

8 channels seat audio system HDMI

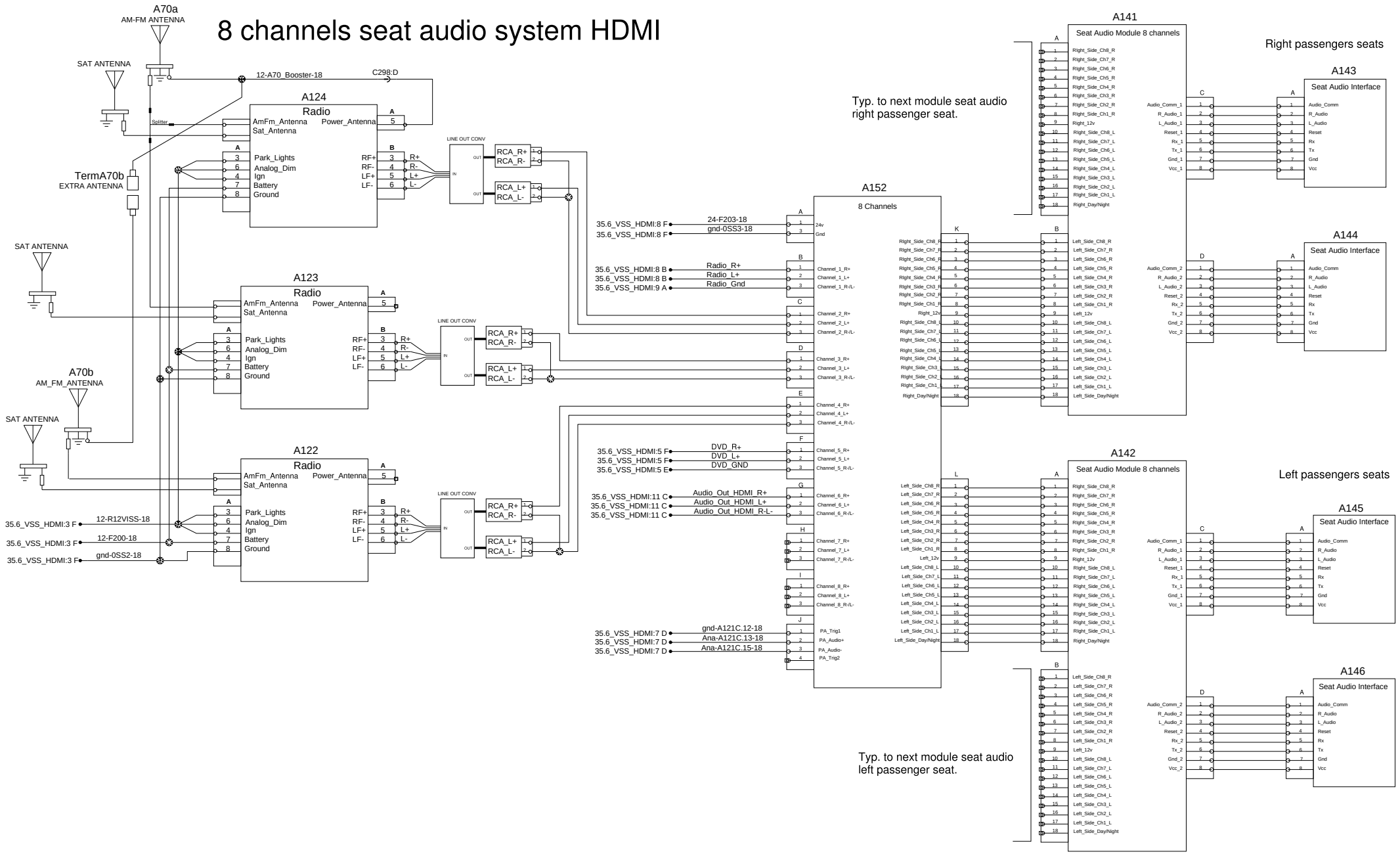

PREVOST®	WIRING DIAGRAM	No:D062140	Page:35.7	Rev:0

WIFI - Wireless System Option

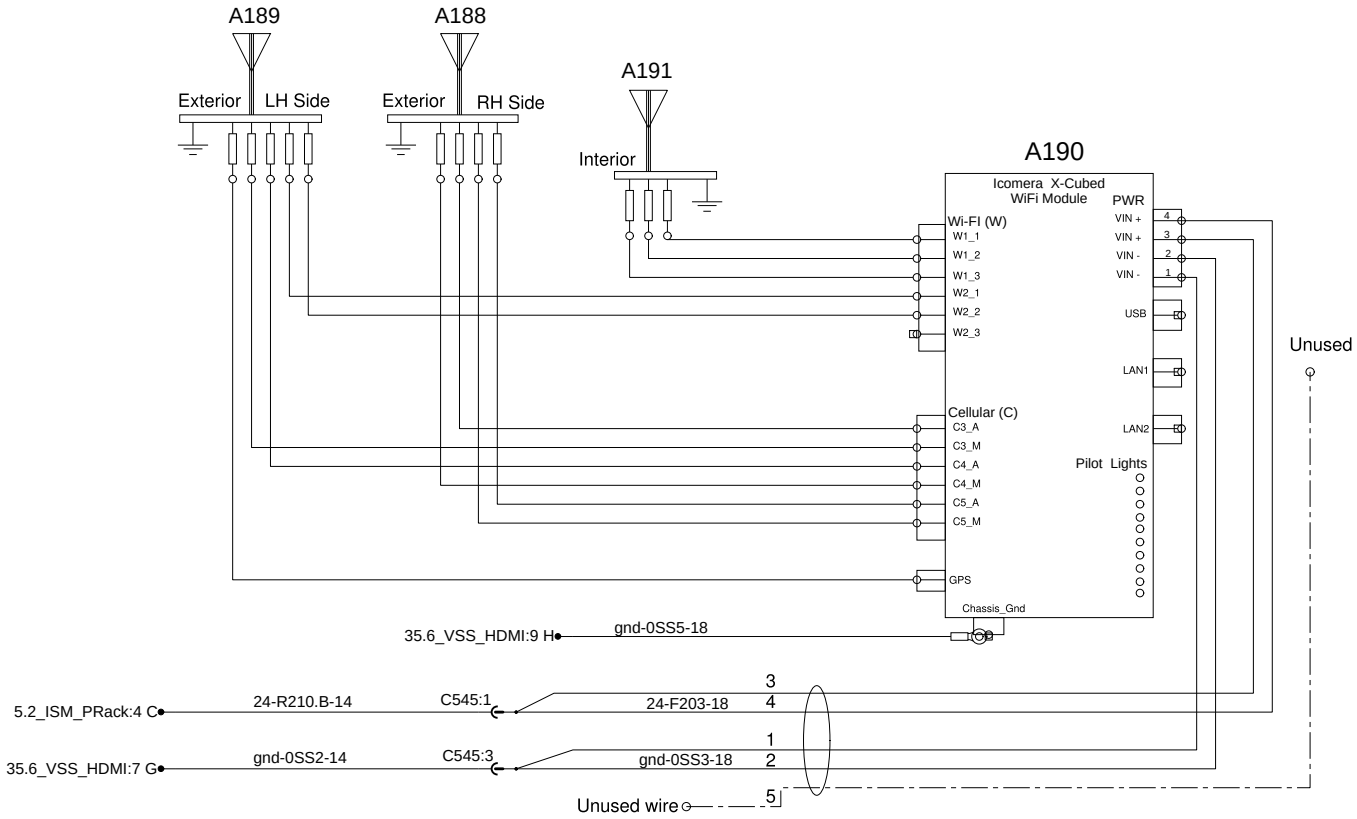

PREVOST®	WIRING DIAGRAM	No:D062140	Page:35.9	Rev:0

Wheel chair lift Ricon 9000

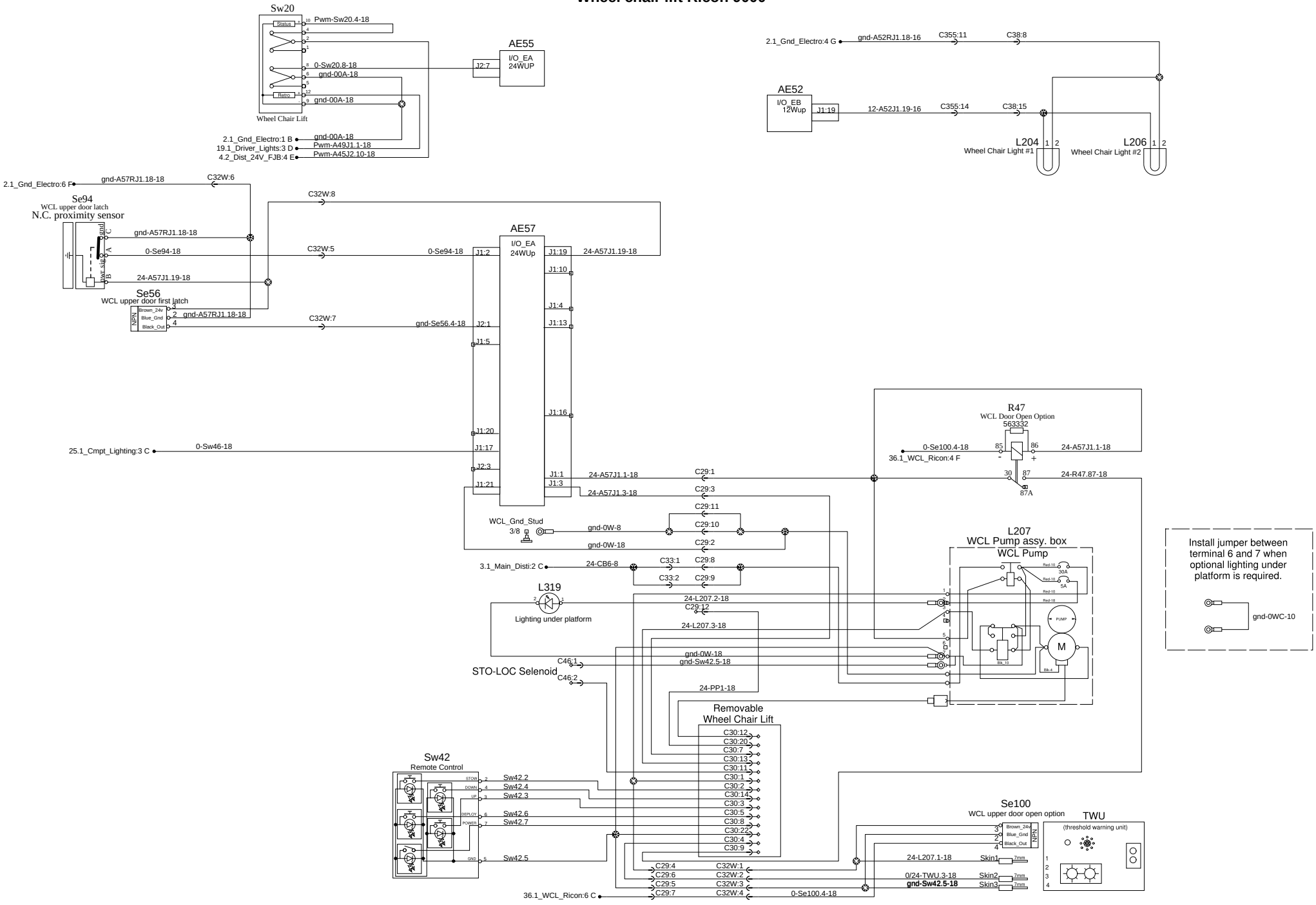

Rev:0

Page:36.1

No:D062140

WIRING DIAGRAM

PREVOST®

Volvo Link TGW

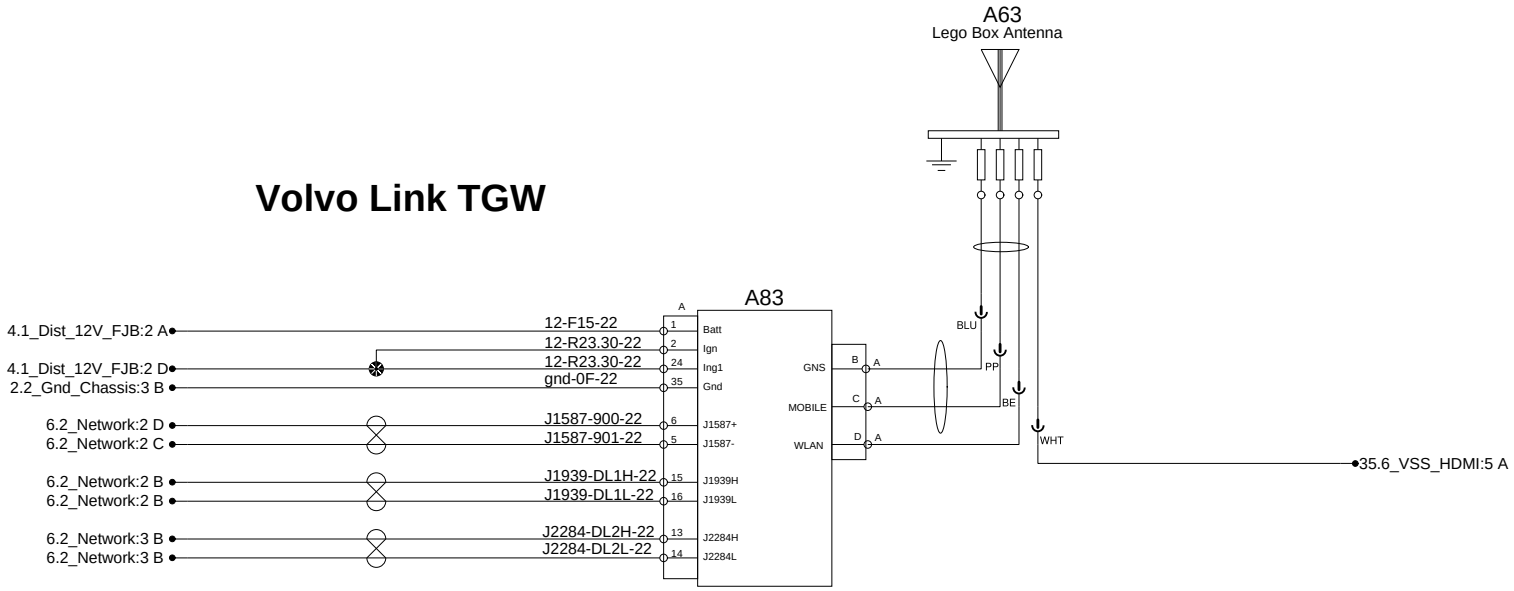

Air Dryer Electric Control and Heater

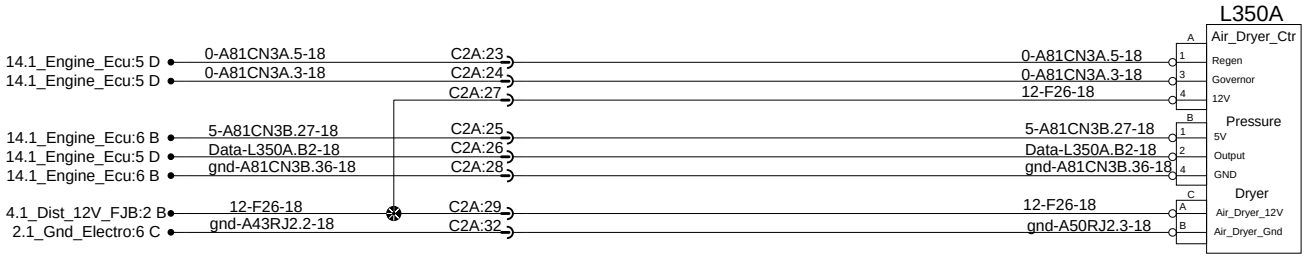

Volvo Link TGW

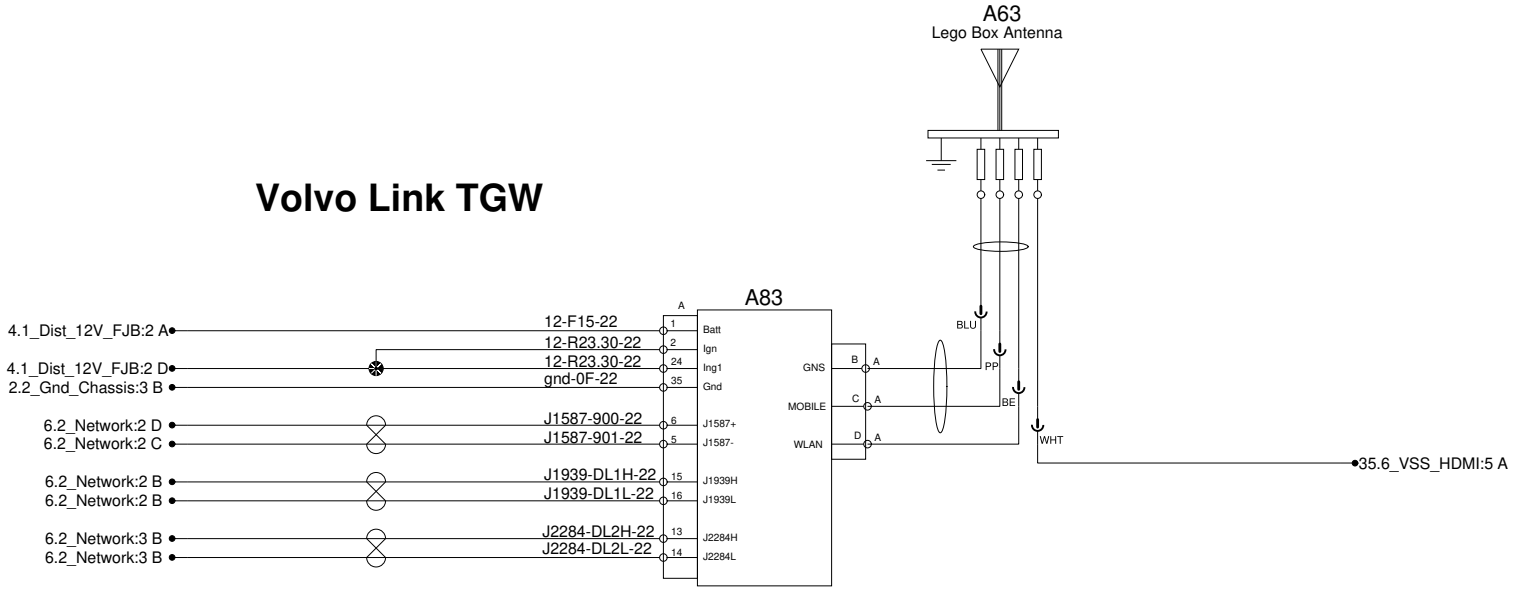

Air Dryer Electric Control and Heater

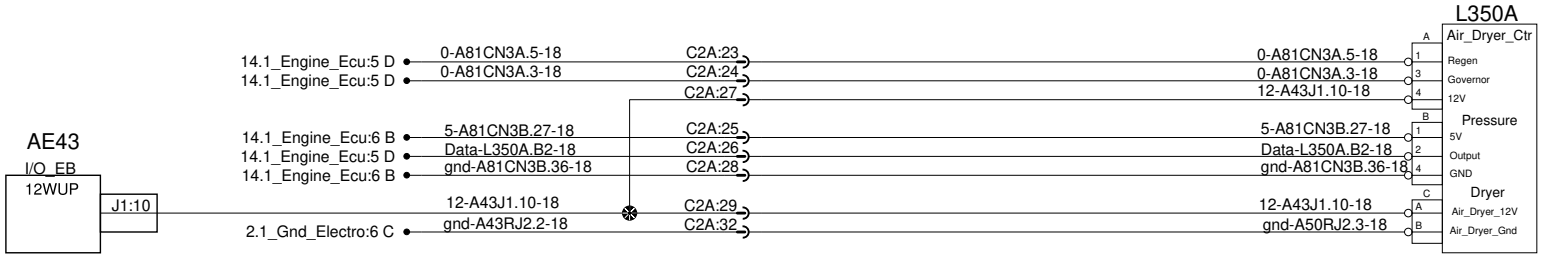

ZF Steering control

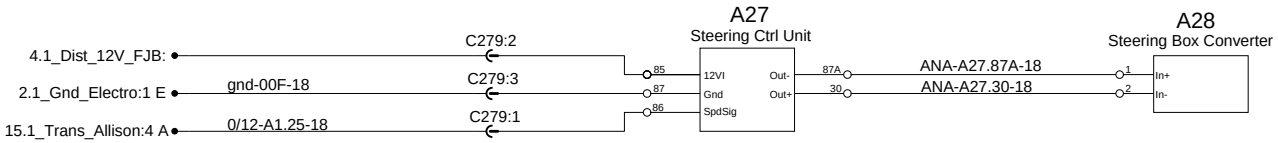

Automatic fire suppression system

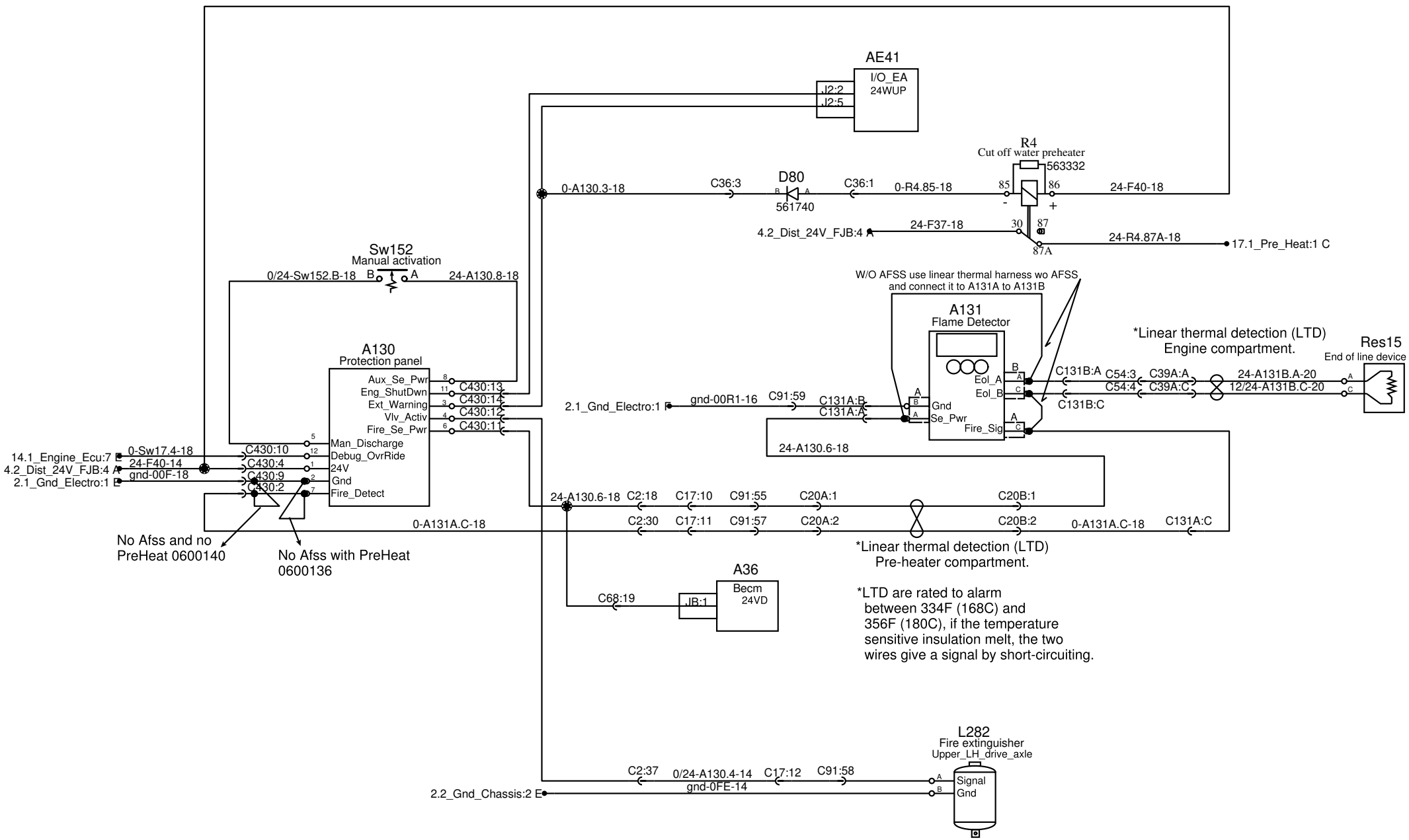

PREVOST®	WIRING DIAGRAM	No:D062140	Page:38.1	Rev:3

Tire pressure monitoring system

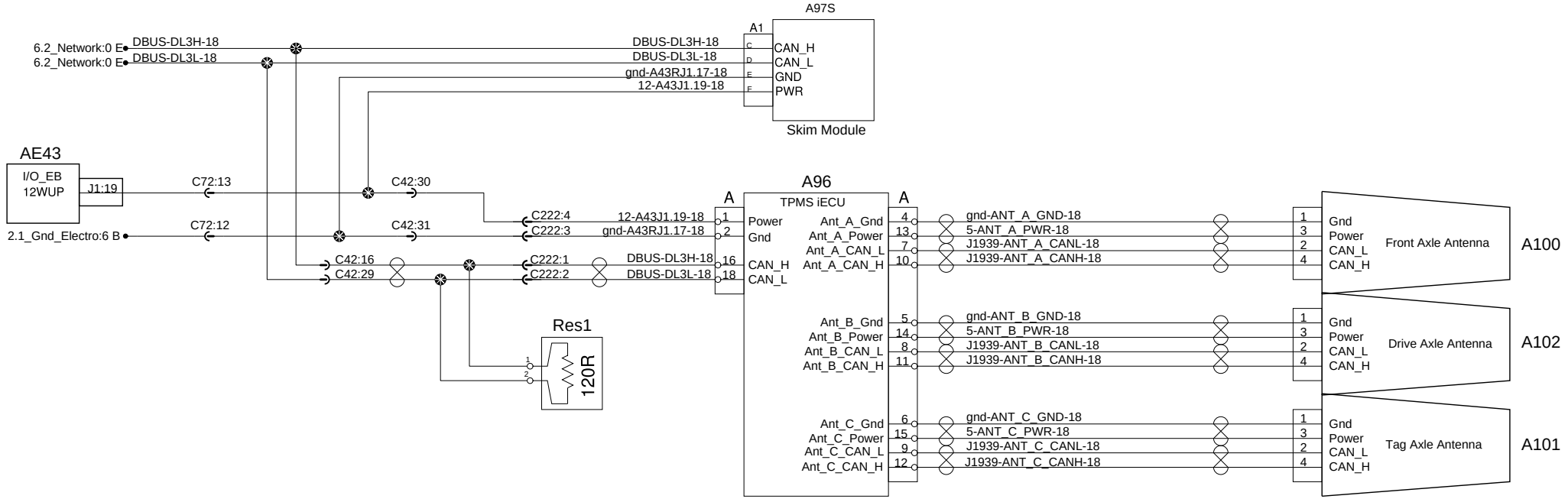

PREVOST®	WIRING DIAGRAM	No:D062140	Page:39.1	Rev:0

Tire pressure monitoring system

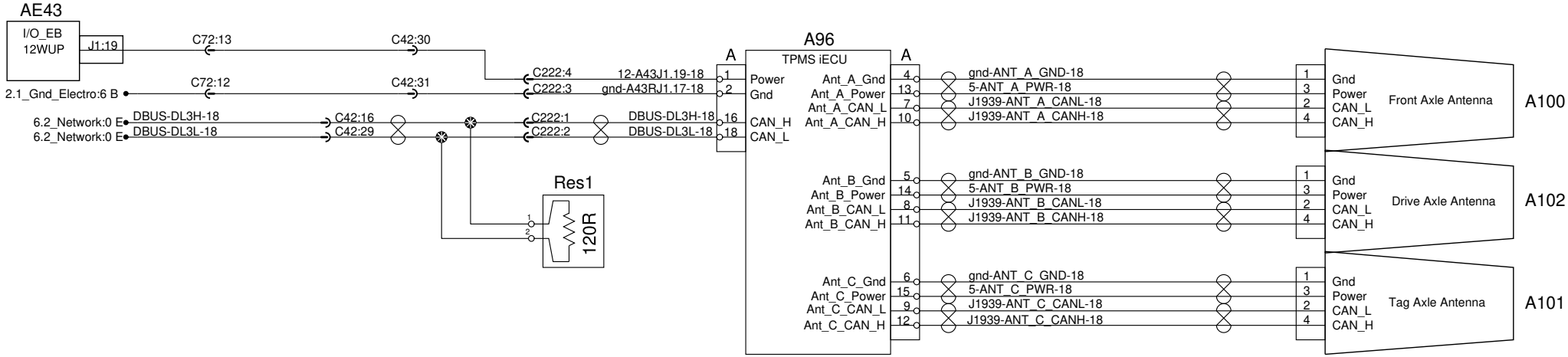

PREVOST®	WIRING DIAGRAM	No:D062140	Page:39.1	Rev:4

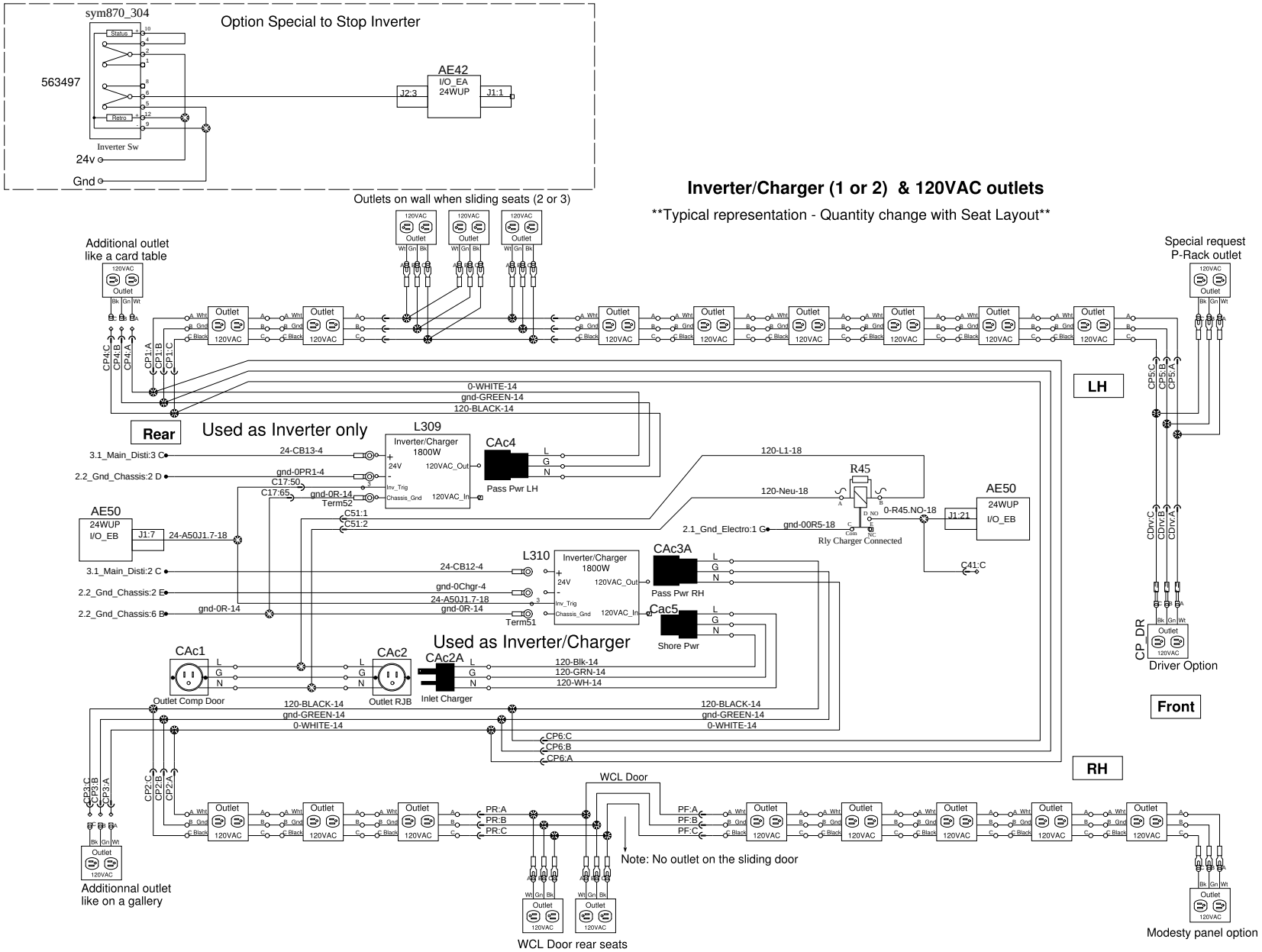

PREVOST®	WIRING DIAGRAM	No:D062140	Page:40.1	Rev:0

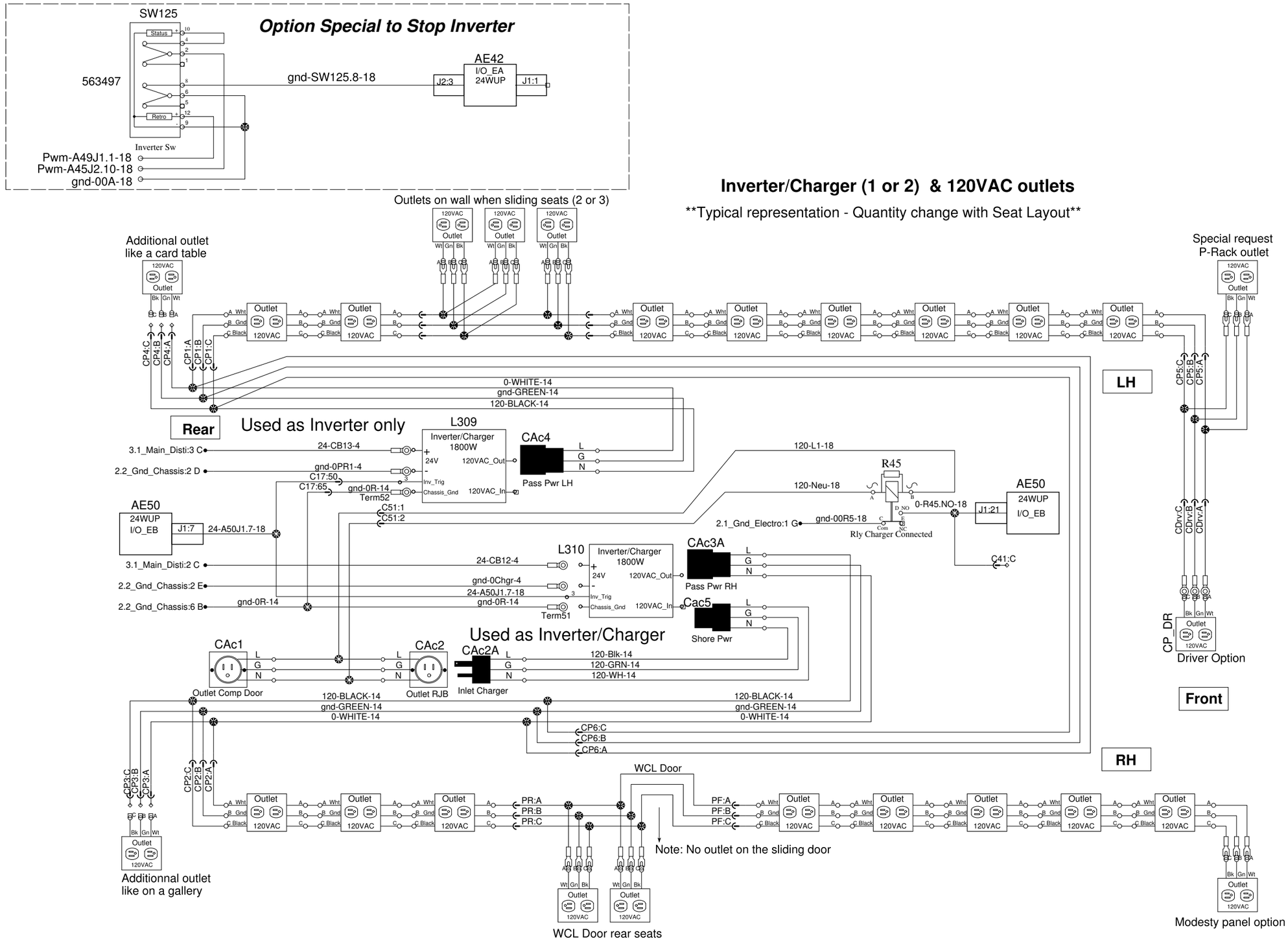

PREVOST®	WIRING DIAGRAM	No:D062140	Page:40.1 SP1	Rev:0

Inverters & 120V AC Outlets
Customer Adaptation for additionnal outlets

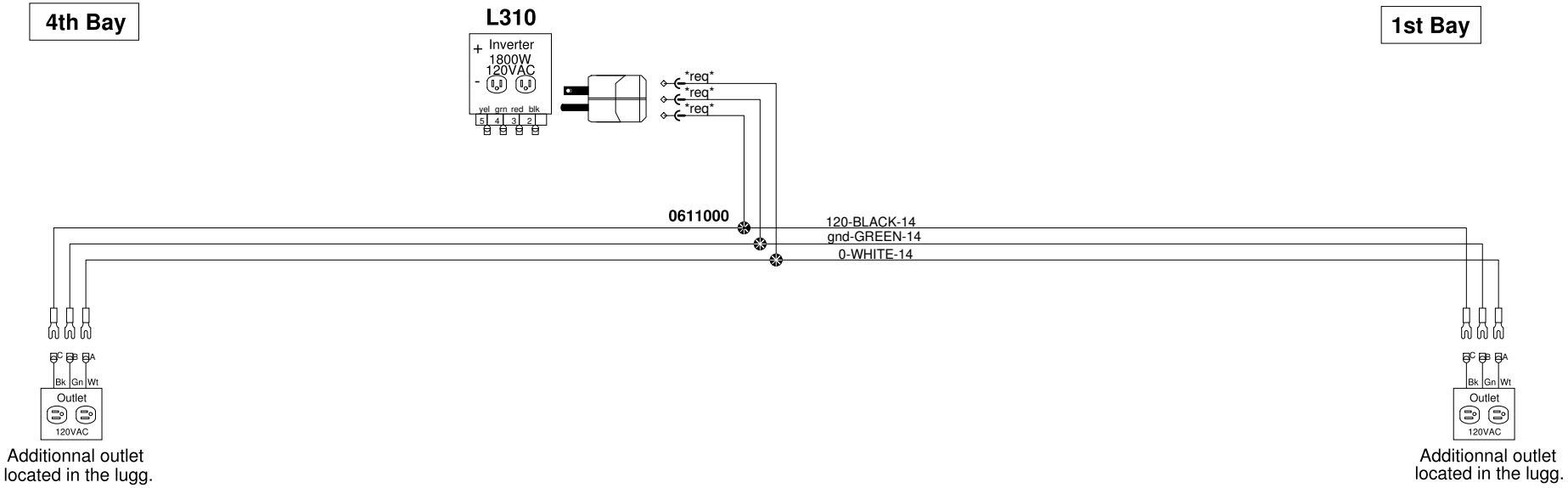

PREVOST®	WIRING DIAGRAM	No:D062140	Page:40.1 SP4	Rev:00

Sun Visors

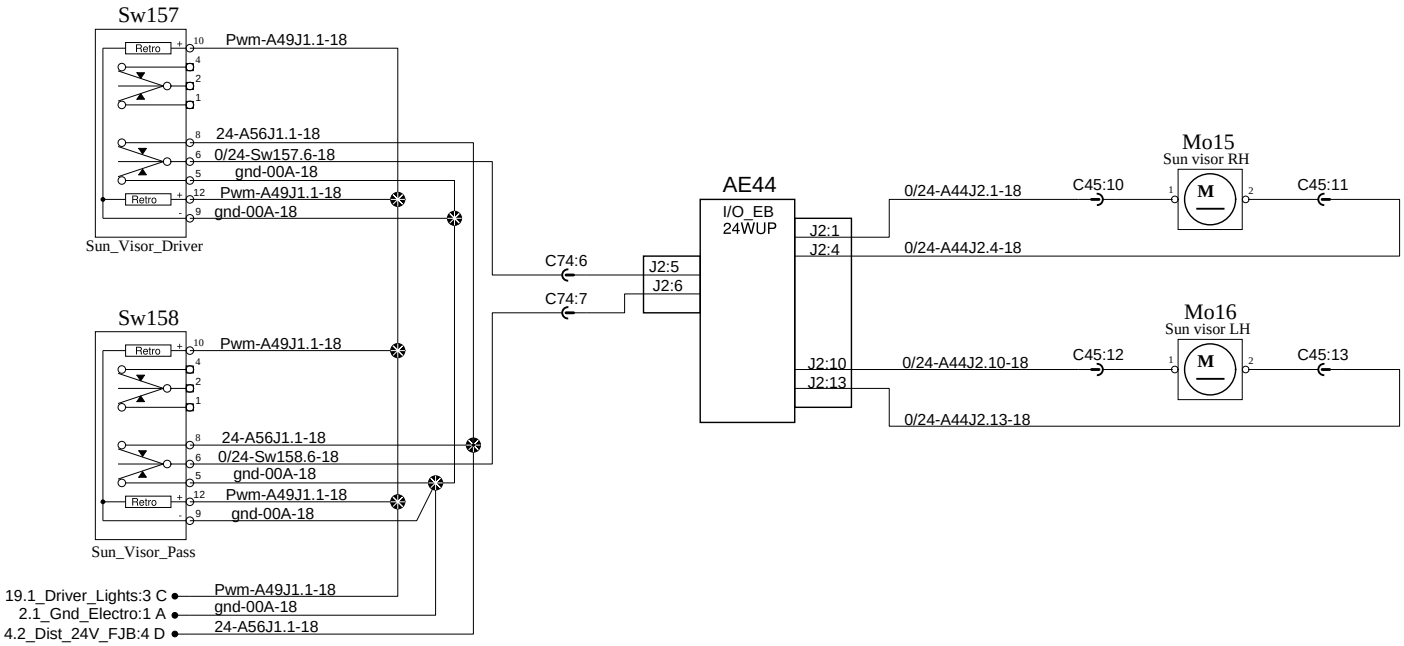

PREVOST®	WIRING DIAGRAM	No:D062140	Page:41.1	Rev:0

ELD / ITS J1939 Gateway

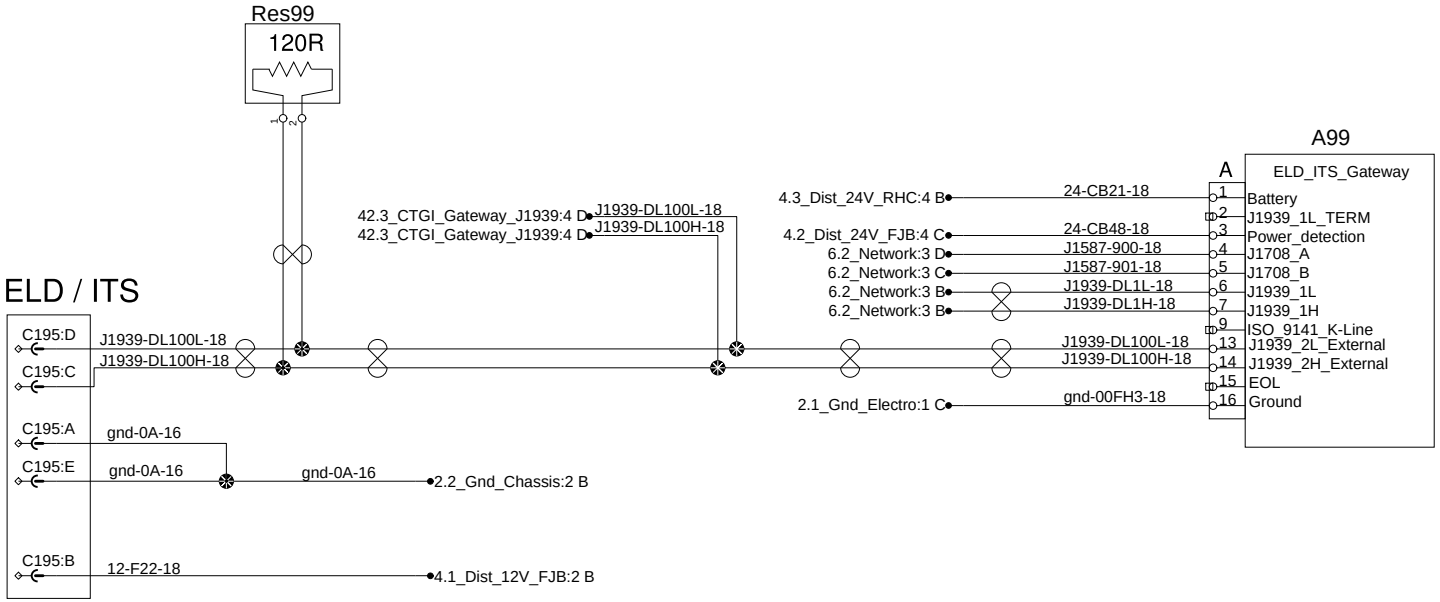

Surrounding Cameras System

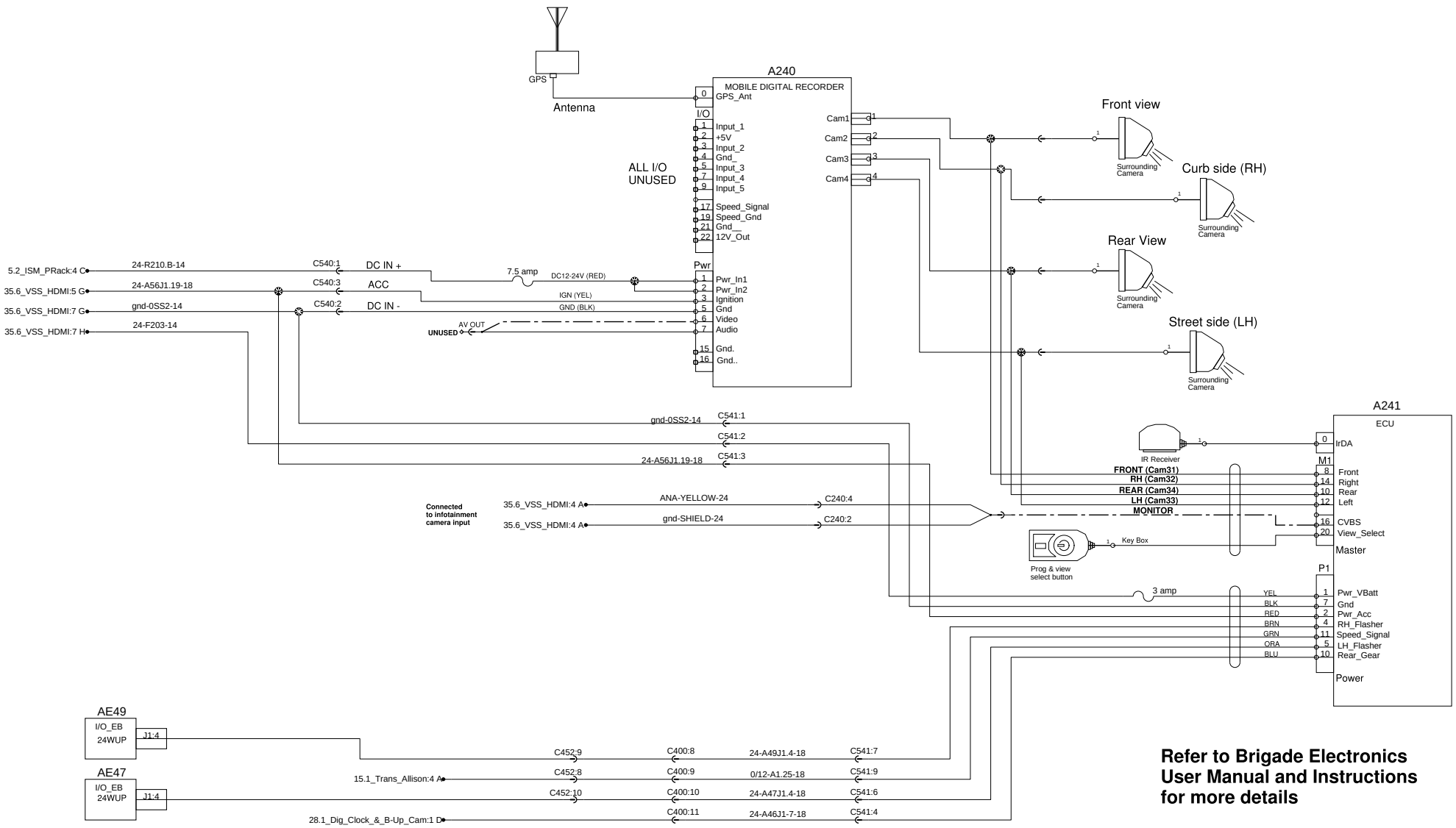

Refer to Brigade Electronics User Manual and Instructions for more details

Emergency Lights

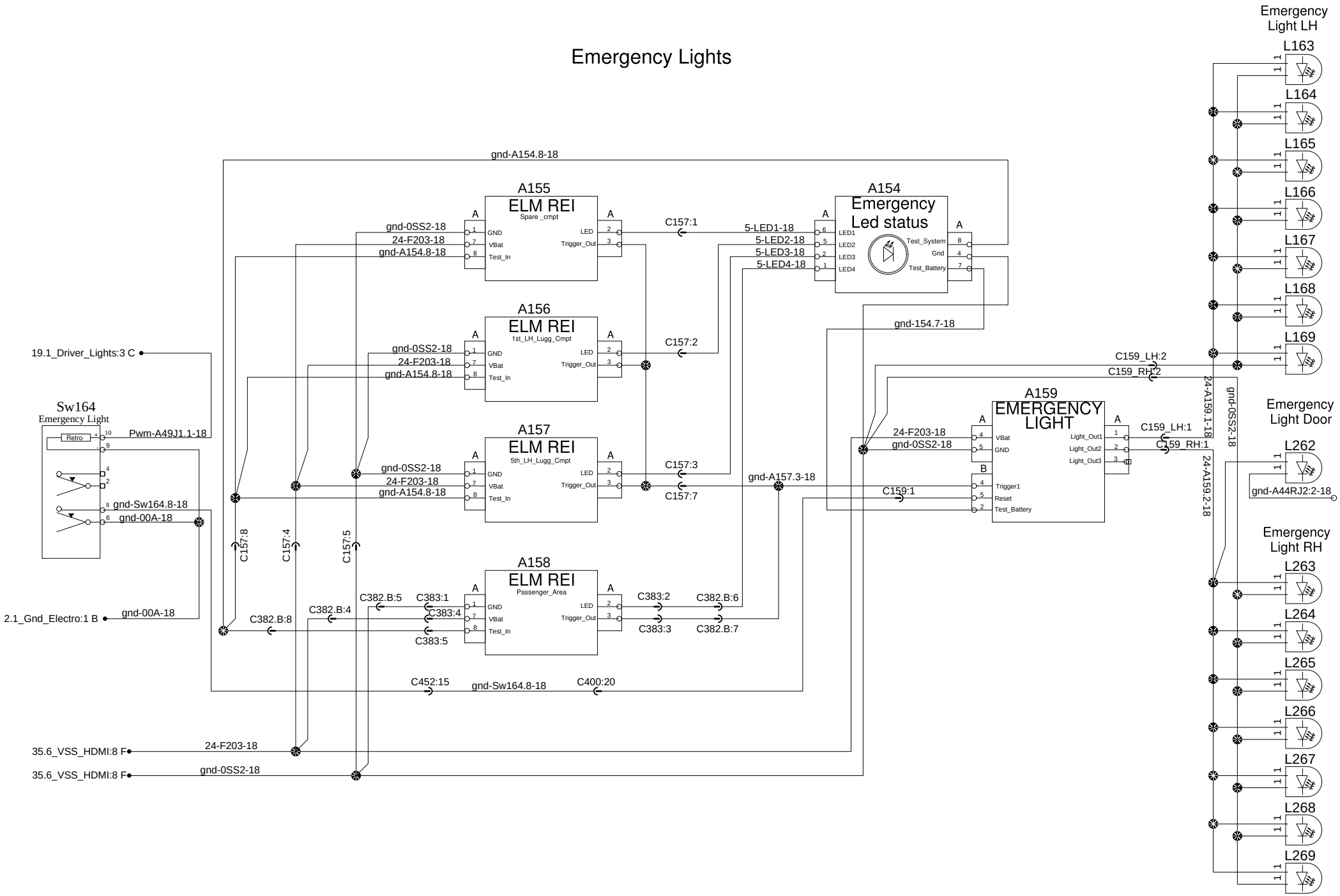

PREVOST®	WIRING DIAGRAM	No:D062140	Page:45.0	Rev:00

Customer Adaptation Dash Interface
(Central Dashboard Connector)

069920 Interconnect 'Y' are used
if there's more than one option C600A and C600B

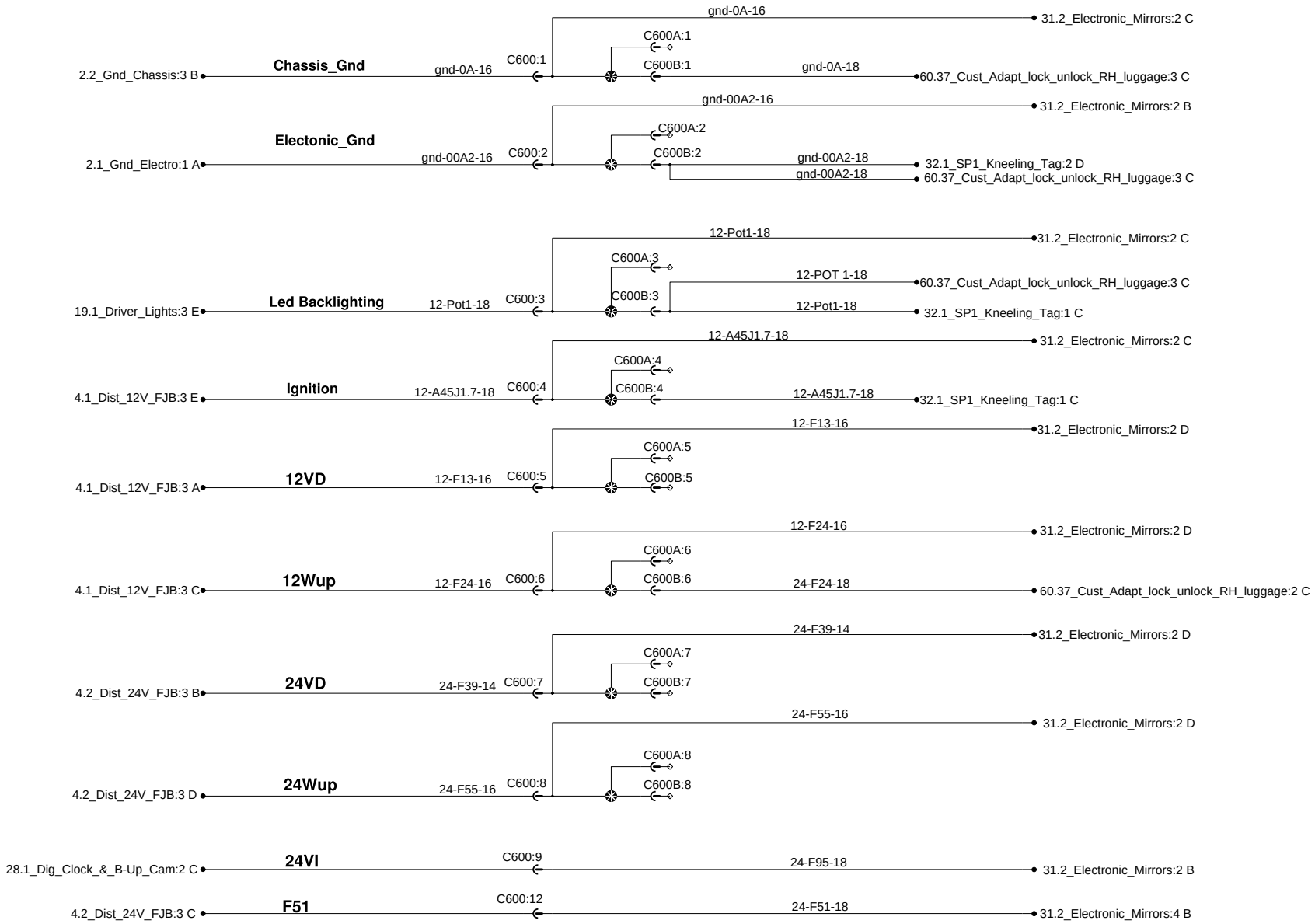

PREVOST CAR	WIRING DIAGRAM	No: D062140	Page:60.0	Rev:00

Customer Adaptation Dash Interface
(Central Dashboard Connector)

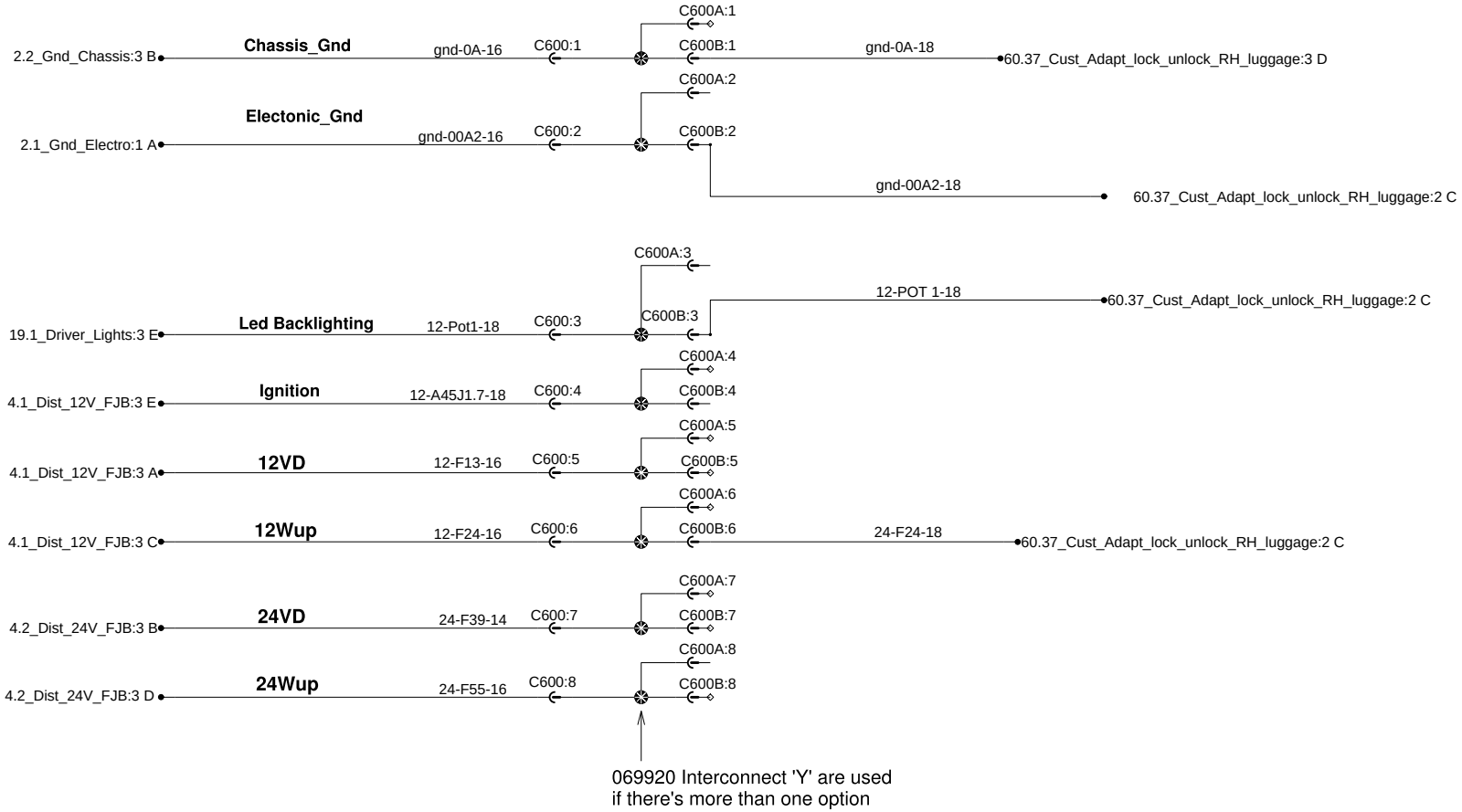

CAMERA REI WITH MONITOR

HD6-600 4 Cameras with Monitor

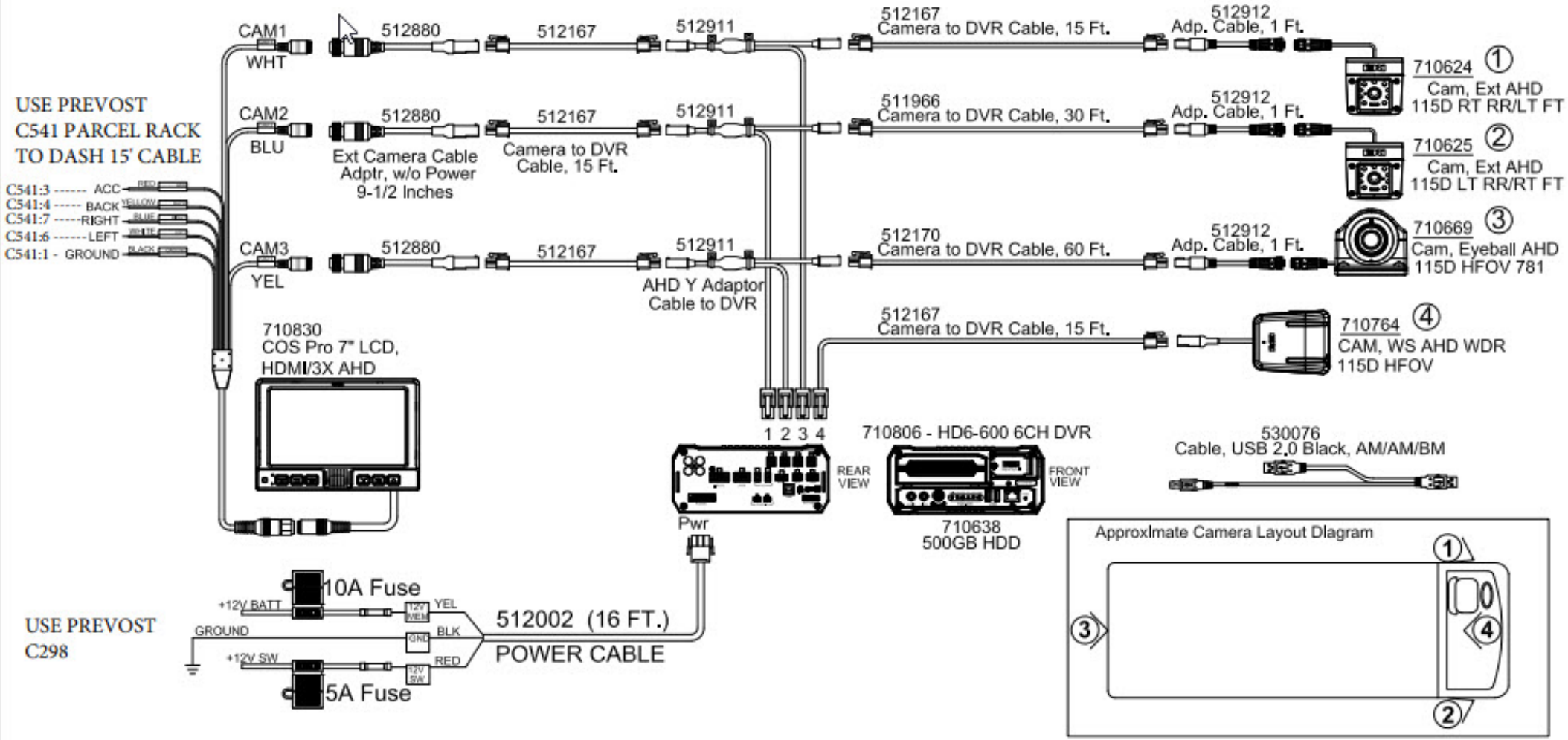

PREVOST®	WIRING DIAGRAM	No: D062140	Page:60.10	Rev:0

Media Player MP-5000 With GPS

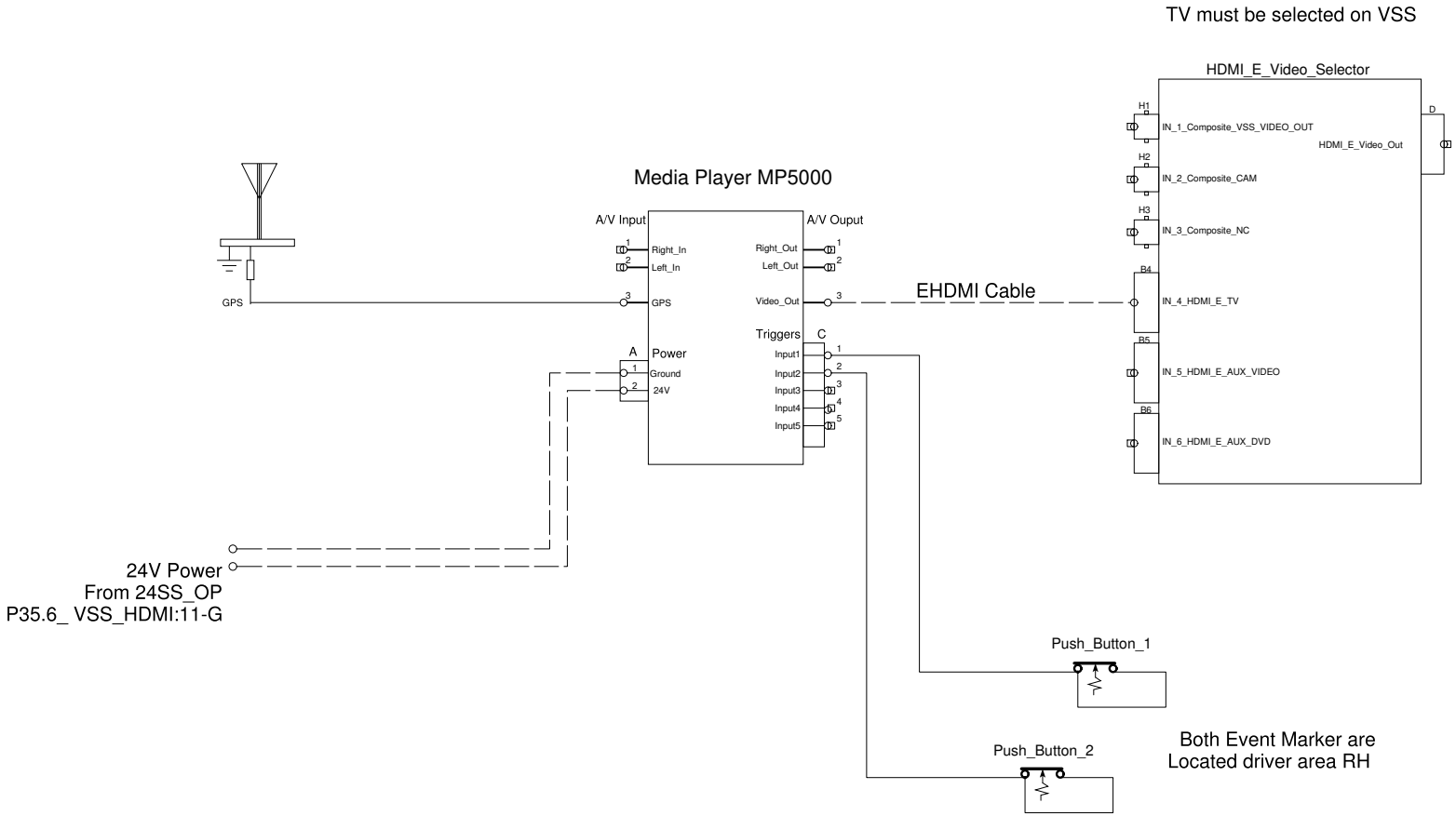

PREVOST®	WIRING DIAGRAM	No: D062140	Page:60.11	Rev:1

Water PreHeater System

Customer Adaptation Add Momentary Sw to ctrl Proheat unit

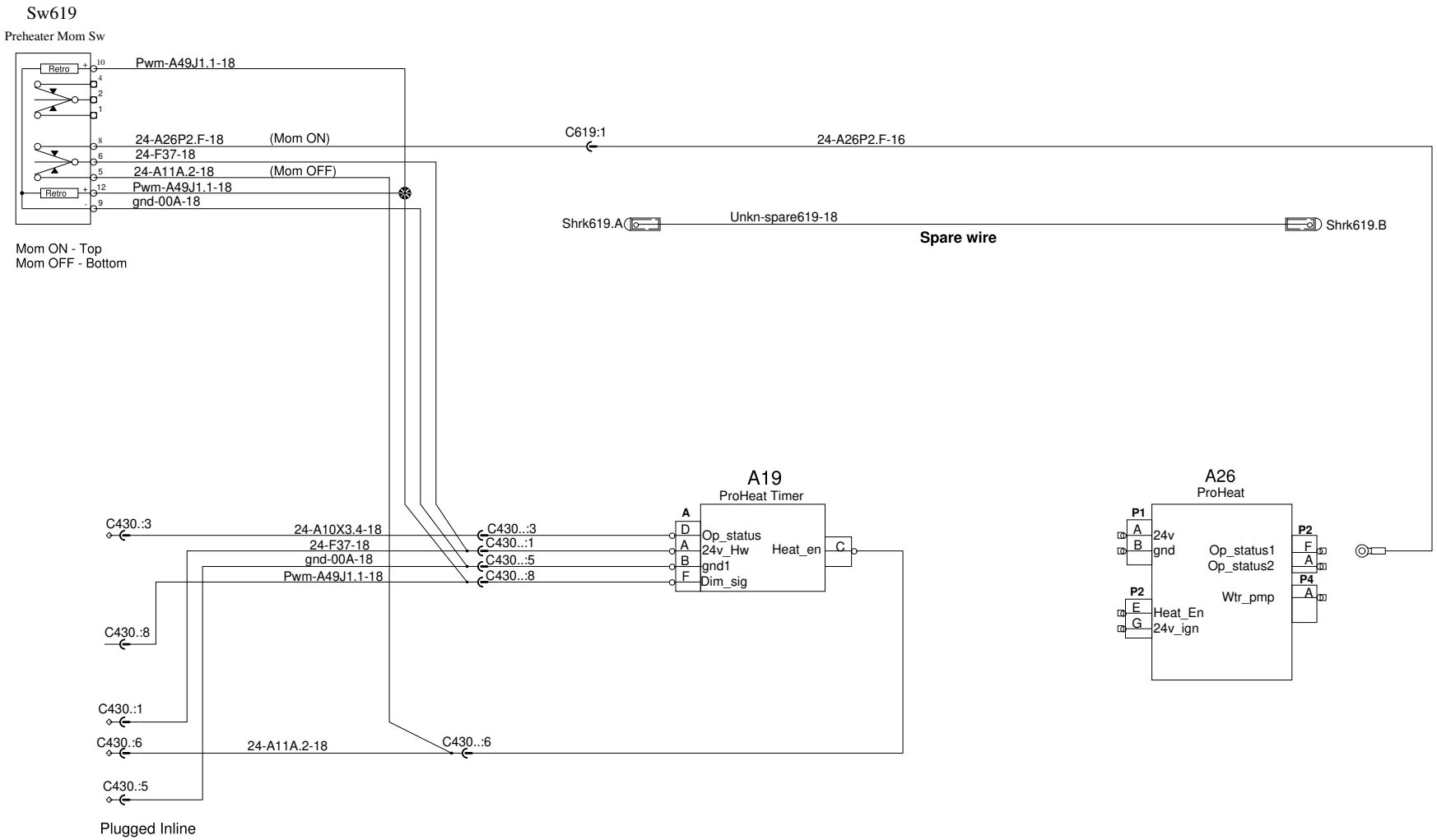

PREVOST®	WIRING DIAGRAM	No:D062140	Page:60.15	Rev:0

12V Internet Sw. on dashboard

CUSTOMER ADAPTATION

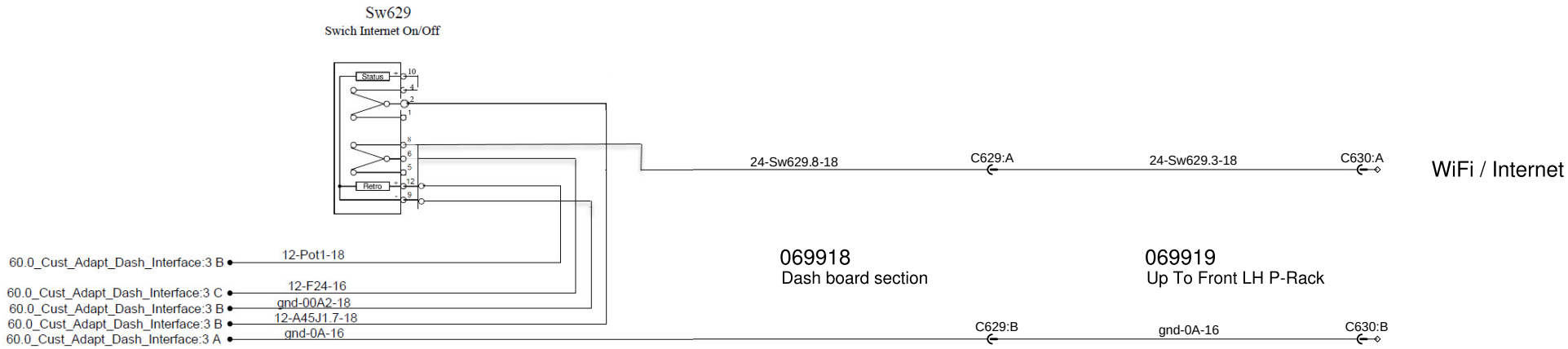

PREVOST®	WIRING DIAGRAM	No: D062140	Page:60.22	Rev:01

Mobile Digital Video Recorders (DVR)

Customer Adaptation

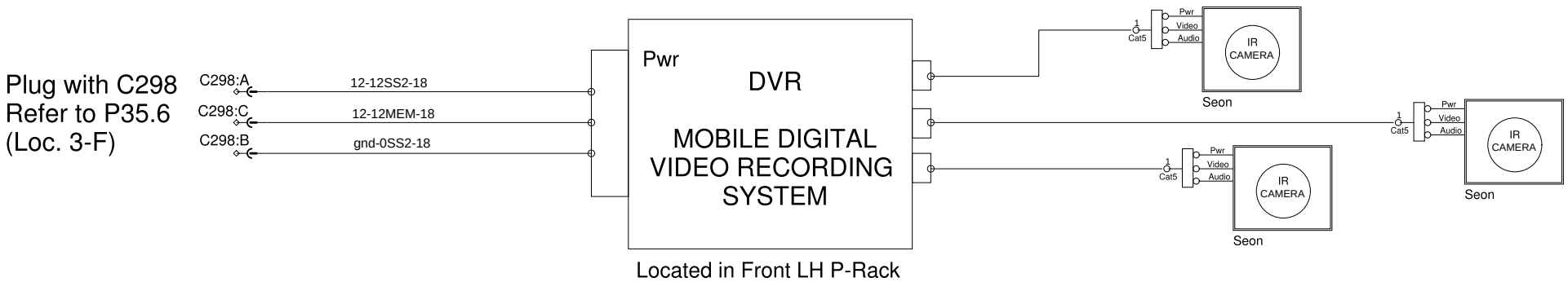

PREVOST®	WIRING DIAGRAM	No:D062140	Page:60.24	Rev:00

Lavatory Smoke Detector
Customer Adaptation

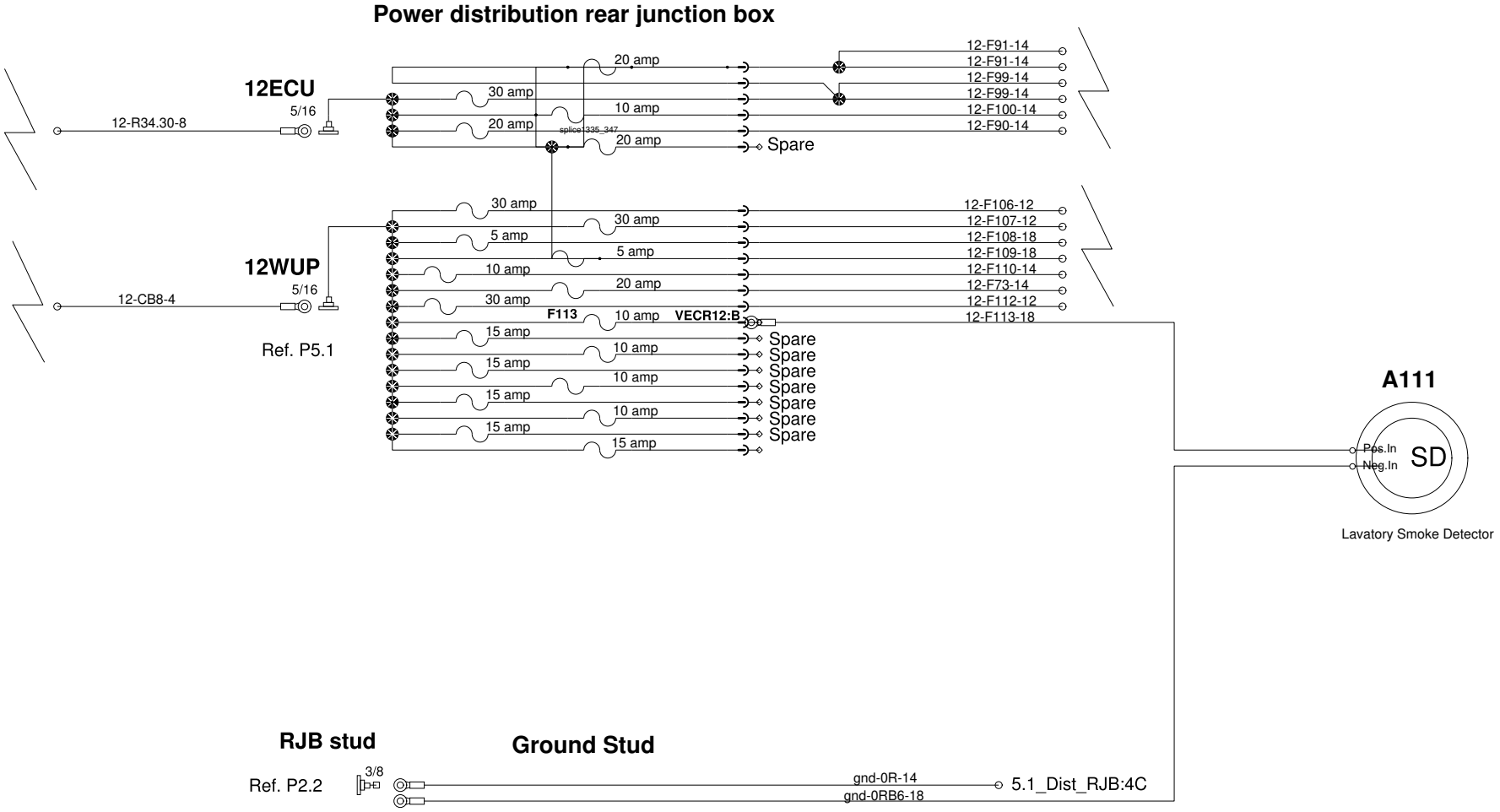

PREVOST®	WIRING DIAGRAM	No:D062140	Page:60.25	Rev:01

Customer adaptation Signals and power for camera system

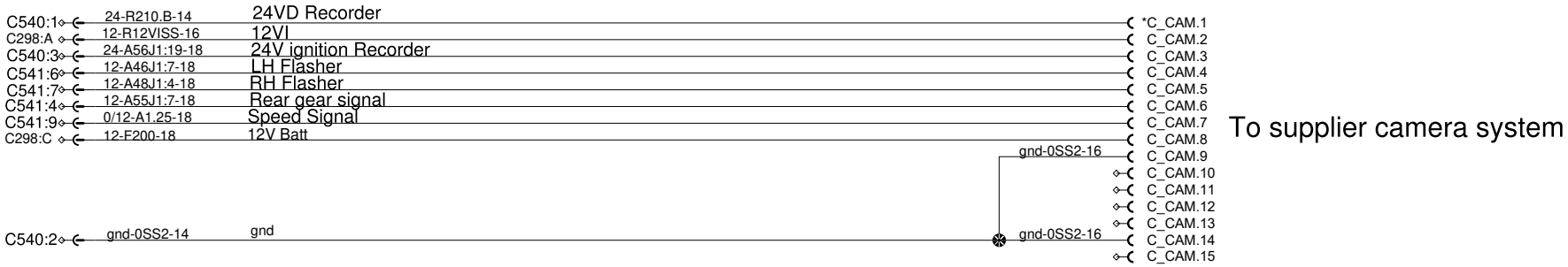

To connect the following connector, refer to pages below:
- Connector C540 - page 44.0 2 C
- Connector C541 - page 44.0 5 E
- Connector C298 - page 35.6 4 F

Customer adaptation Signals and power for camera system

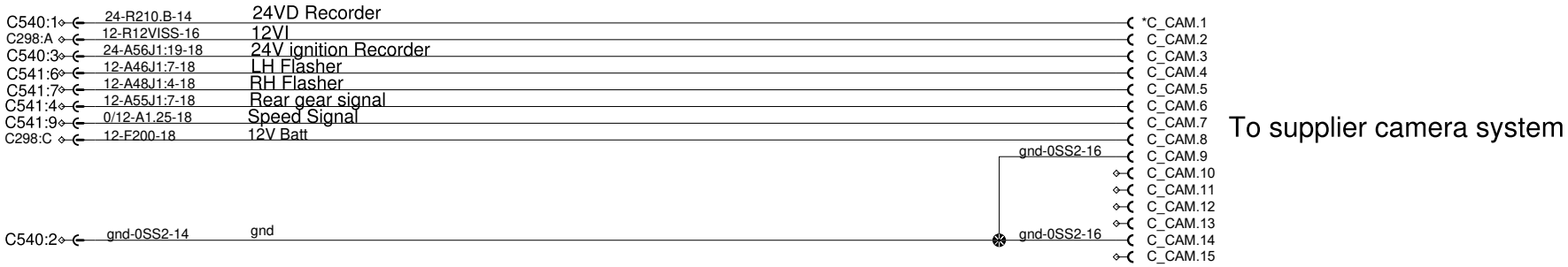

To connect the following connector, refer to pages below:
- Connector C540 - page 44.0 2 C
- Connector C541 - page 44.0 5 E
- Connector C298 - page 35.6 4 F

CTGI - Customer Telematic Gateway Interface
Saucon Prox , Optional Camera and WiFi

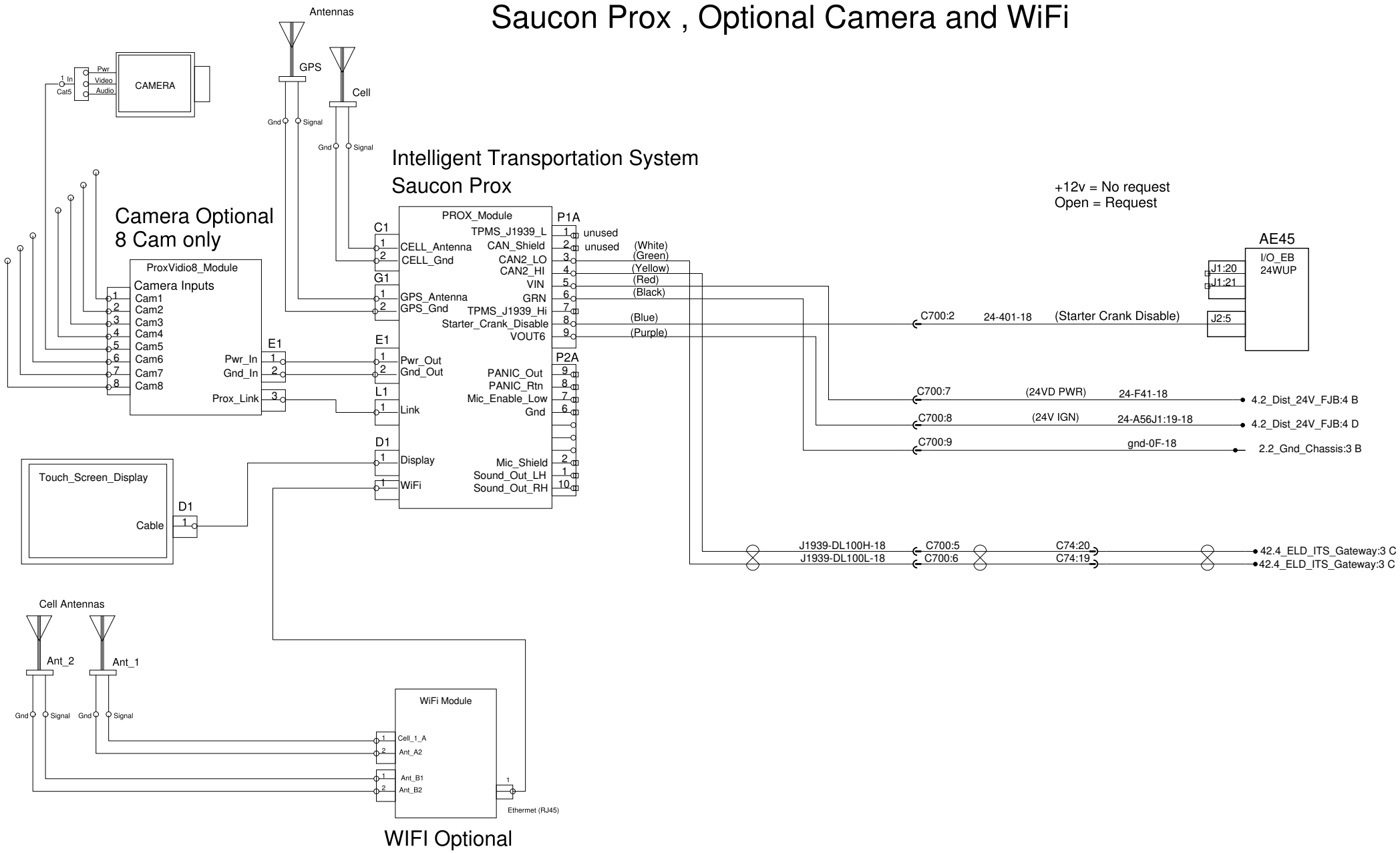

PREVOST®	WIRING DIAGRAM	No:D062140	Page:60.4	Rev:00

CTGI - Customer Telematic Gateway Interface
Saucon Prox , Optional Camera and WiFi

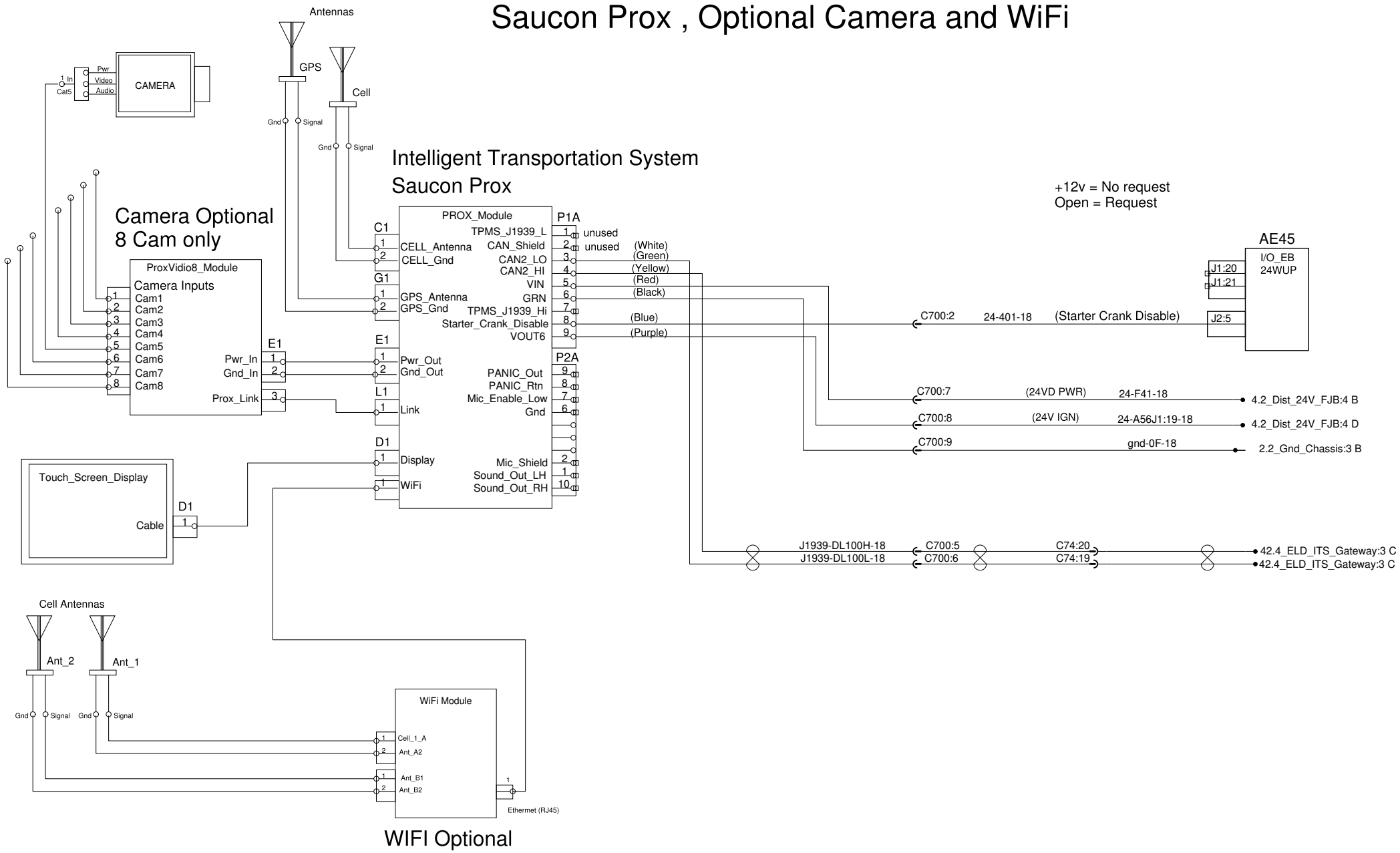

PREVOST®	WIRING DIAGRAM	No:D062140	Page:60.4	Rev:00

WATER IN FUEL DETECTION

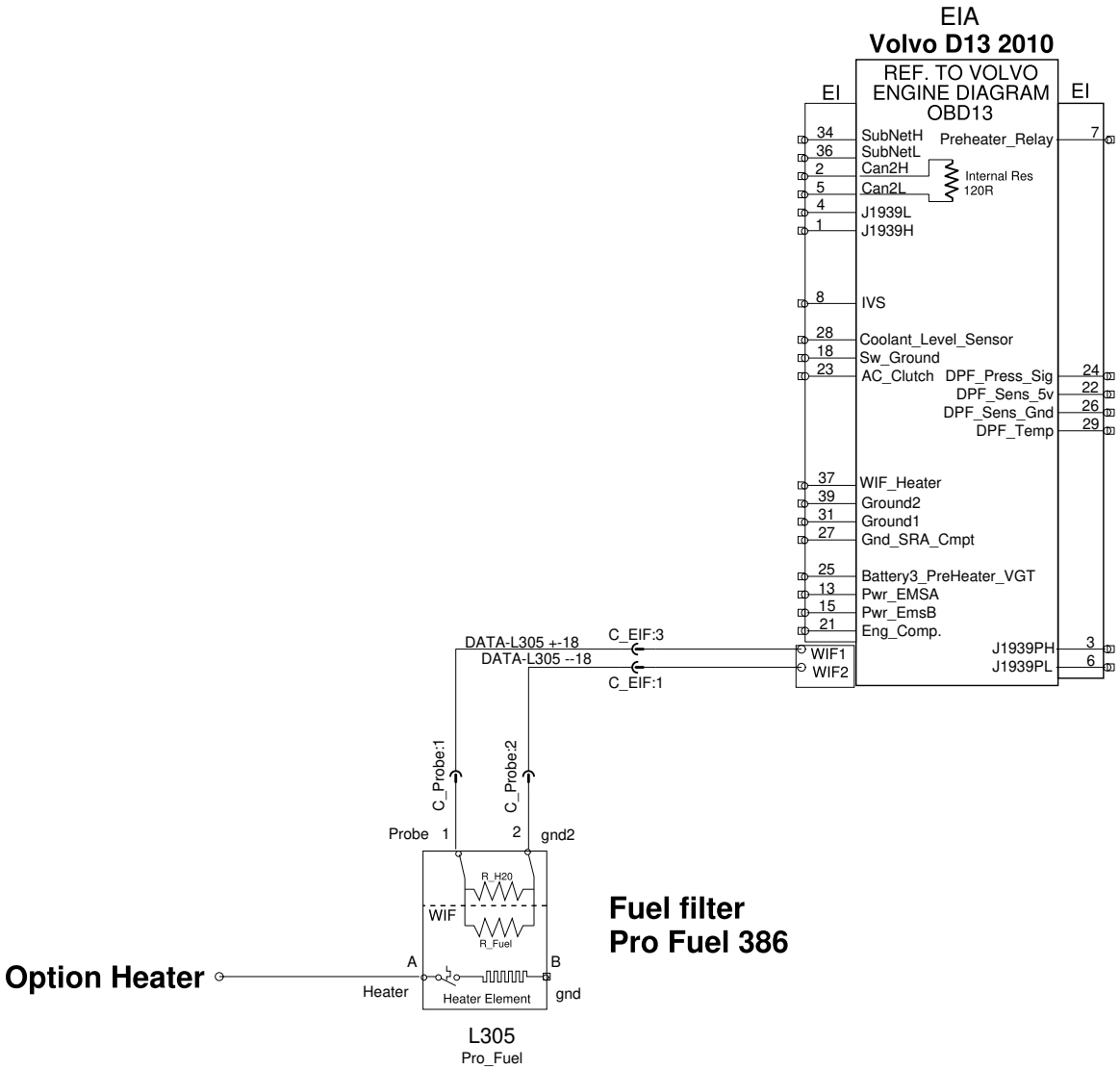

Marker and FLasher Lights Additionnal

Customer Adaptation

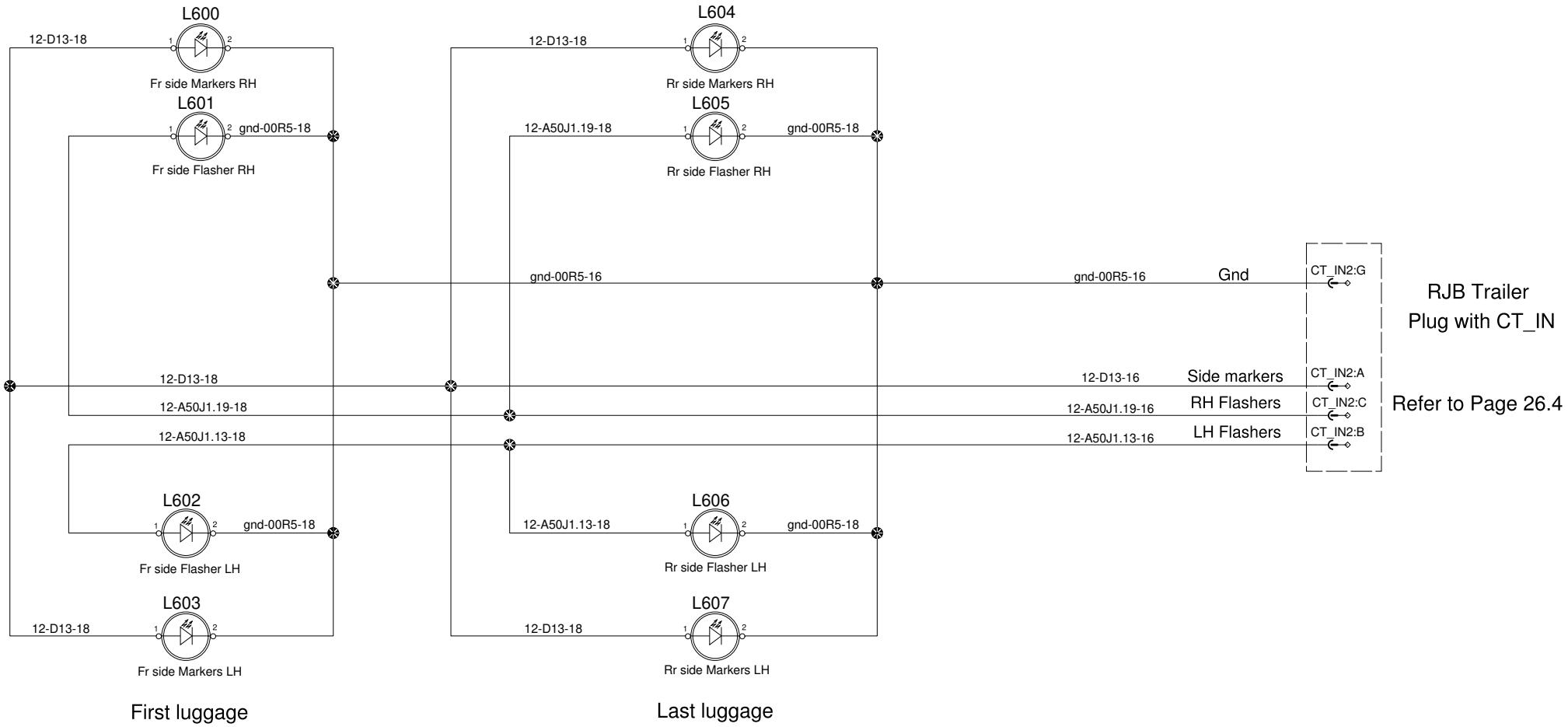

Marker and FLasher Lights Additionnal
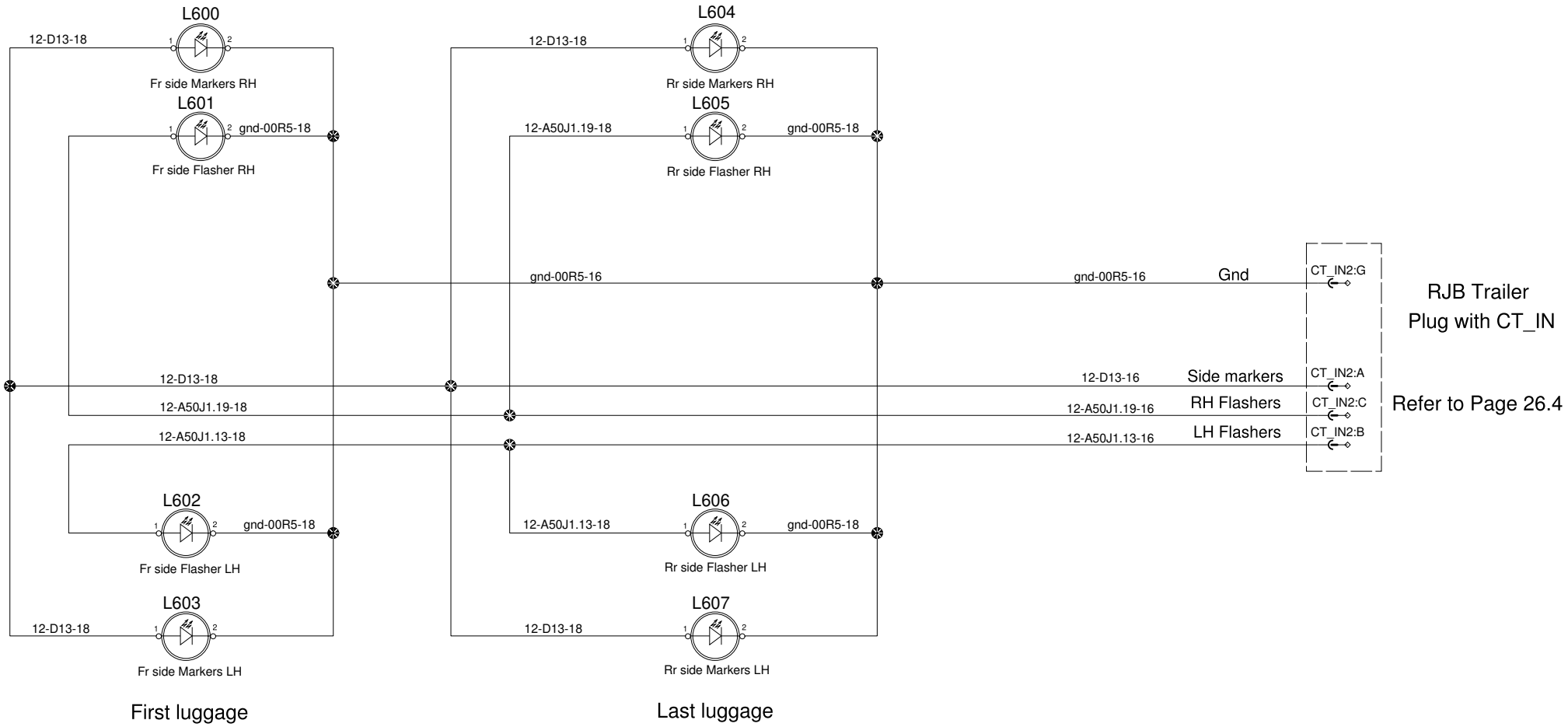
Customer Adaptation