SECTION 00: GENERAL INFORMATION

CONTENTS

1. FOREWORD 00-2
2. UPDATES, SERVICE BULLETINS AND SERVICE INFORMATION DOCUMENT 00-2
3. SCHEMATICS 00-2
4. SAFETY NOTICE 00-2
5. DATA PLATES CERTIFICATIONS 00-3
    - 5.1 Engine 00-3
    - 5.2 Transmission 00-3
    - 5.3 Drive Axle 00-3
    - 5.4 Front Axle 00-3
    - 5.5 Power Steering Pump 00-3
    - 5.6 Coach Final Record 00-4
    - 5.7 Safety Certification 00-4
    - 5.8 Dot Certification Label 00-4
    - 5.9 EPA Engine Label 00-4
    - 5.10 Fuel Tank Label 00-4
    - 5.11 Vehicle Identification Number (VIN) 00-4
6. FASTENER STRENGTH IDENTIFICATION 00-6
    - 6.1 Prevailing Torque Fasteners 00-7
    - 6.2 Recommendations For Reuse 00-7
    - 6.3 Six Lobed Socket Head 00-7
7. MAINTENANCE MANUAL - TABLE OF CONTENTS 00-10

LIST OF ILLUSTRATIONS

FIG. 1: SERIAL AND MODEL NUMBERS 00-3
FIG. 2: LABEL 00-3
FIG. 3: TYPICAL SERIAL AND MODEL NUMBERS 00-3
FIG. 4: TYPICAL SERIAL AND MODEL NUMBERS 00-3
FIG. 5: POWER STEERING PUMP NAMEPLATE 00-3
FIG. 6. DOT CERTIFICATION LABEL 00-4
FIG. 7: ENGINE COMPARTMENT 00-4
FIG. 8: FUEL TANK ACCESS PANEL 00-4
FIG. 9: VEHICLE I.D. 00-5
FIG. 10: VEHICLE IDENTIFICATION NUMBER 00-5
FIG. 11: THREAD NOTATION 00-6
FIG. 12: BOLT STRENGTH MARKINGS 00-6
FIG. 13: PREVAILING TORQUE FASTENERS 00-7
FIG. 14: TORQUE CHART 00-7
FIG. 15: METRIC - ENGLISH CONVERSION TABLE 00-8
FIG. 16: CONVERSION CHART - CUSTOMARY AND METRIC 00-9

1. FOREWORD

This manual includes procedures for diagnosis, service, maintenance and repair for components of the coach model listed on the front cover page.

This manual should be kept in a handy place for ready reference by the technician. If properly used, it will meet the needs of the technician and vehicle owner.

Information provided in Section 1 through 24 pertains to standard equipment items, systems and components and the most commonly used optional equipment and special equipment offered on the coach models covered by this manual.

At the beginning of each section : a Table of Contents and a list of illustrations give the page number on which each subject begins and where each figure is located.

Coach operating information is provided in a separate Operator's Manual. Audio/Video system operator instructions are also included in a separate manual.

More specific information on engine and transmission operating, maintenance, and overhaul information is contained in the applicable engine or transmission service manual published by the engine or transmission manufacturer. Engine and transmission parts information is contained in the applicable engine or transmission parts catalog published by the engine or transmission manufacturer.

All information, illustrations and specifications contained in this manual are based on the latest product information available at the time of publication approval. The right is reserved to make product changes at any time without notice.

Note: *Typical illustrations may be used, therefore minor illustration difference may exist when compared to actual parts or other publications.*

2. UPDATES, SERVICE BULLETINS AND SERVICE INFORMATION DOCUMENTS

They are issued, when required, to supplement or supersede information in this manual. Update sheet and bulletins should be noted and filed at the end of the proper section for future use.

3. SCHEMATICS

Vehicle AIR SCHEMATICS are provided at the end of Section 12, "Brake". SUSPENSION AIR SCHEMATICS are provided at the end of Section 16, "Suspension". Moreover, ELECTRICAL SCHEMATICS are provided in the technical publication box. Refer to those schematics for detailed circuit information or during diagnosis.

4. SAFETY NOTICE

This maintenance manual has been prepared in order to assist skilled mechanics in the efficient repair and maintenance of PRÉVOST vehicles.

This manual covers only the procedures as of the manufacturing date.

Safety features may be impaired if other than genuine PRÉVOST parts are installed.

Torque wrench tightening specifications must be strictly observed. Locking devices must be installed or replaced by new ones, where specified. If the efficiency of a locking device is impaired, It must be replaced.

This manual emphasizes particular information outlined by the wording and symbols:

Warning: *Identifies an instruction which, if not followed, could cause personal injuries.*

Caution: *Outlined an instruction which, if not followed, could severely damage vehicle components.*

Note**:** *Indicates supplementary information needed to fully complete an instruction.*Although, the mere reading of such information does not eliminate the hazard, your understanding of the information will promote its correct use.

5. DATA PLATES CERTIFICATIONS

Delay and confusion can be avoided by placing the complete vehicle identification number of the coach and the serial numbers of the engine on parts orders and correspondence. Also, the transmission, axles, power steering pump chassis and other major components are identified by serial numbers.

5.1 Engine

The engine serial and model number are stamped on the cylinder block (as viewed from the flywheel end) on the left side just below the fire deck and above the cast-in Detroit Diesel logo (Fig. 1).

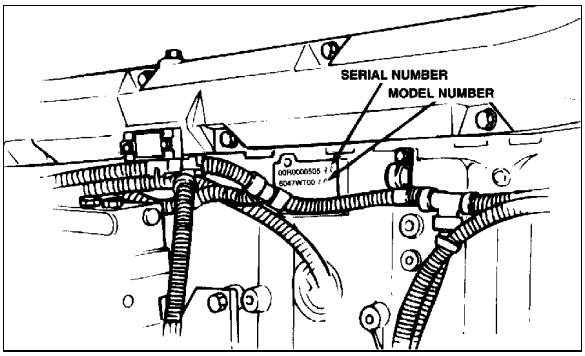

FIGURE 1: SERIAL AND MODEL NUMBERS OEH3B802

In addition, option plates made of laminated paper are located on the rocker cover (starter side). The engine serial and model number and a list of the optional engine equipment is written on the option plate. Refer to this information when ordering replacement parts (Fig. 2).

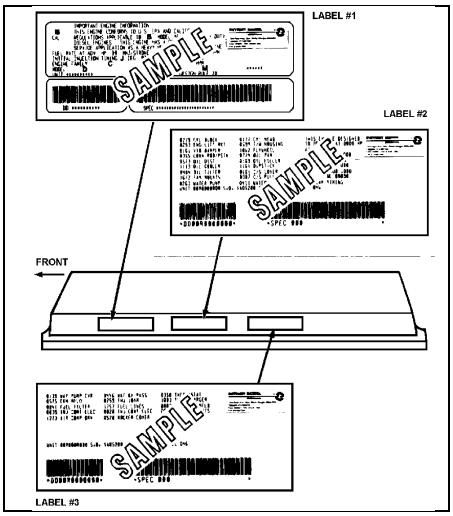

FIGURE 2: LABEL

5.2 Transmission

The transmission identification plate is located on the right-rear side of the transmission.The identification plate shows the transmission serial number, part number (assembly number), and model number. Use all three numbers when ordering parts.

5.3 Drive Axle

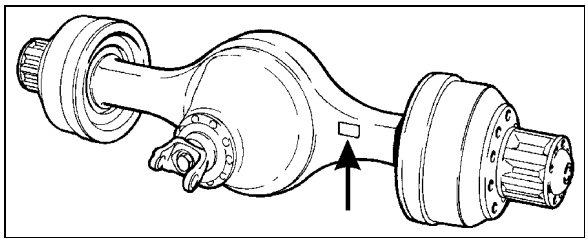

OEH3B812

FIGURE 3: TYPICAL SERIAL AND MODEL NUMBERS

5.4 Front Axle

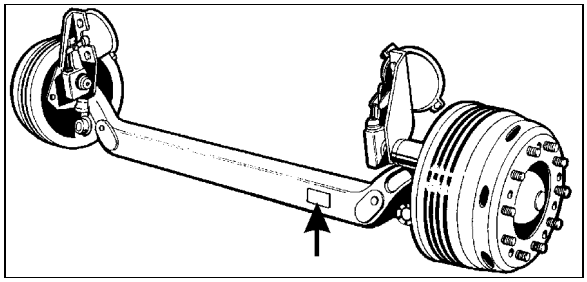

OEH3B814

FIGURE 4: TYPICAL SERIAL AND MODEL NUMBERS

5.5 Power Steering Pump

Power steering pump serial number is located on a tag on the pump (Fig. 5). The pump is mounted on the engine beside the crankshaft pulley.

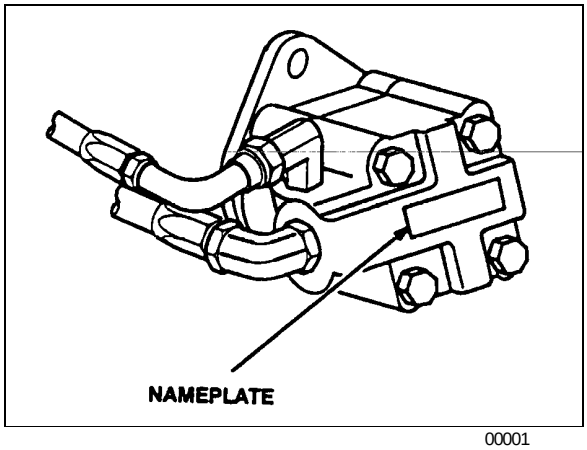

00001

FIGURE 5: POWER STEERING PUMP NAMEPLATE

5.6 Coach Final Record

The Coach Final Record is a record of all data pertaining to the assembly of the coach. This record is included in the technical publication package supplied with the coach. Retain this record in the company records office for reference and safe-keeping.

5.7 Safety Certification

Coach components meet specifications and standards as follows:

- Material and parts conform to ASTM and/or SAE standards in effect at the time of manufacture.
- All factory-installed interior materials meet FMVSS 302 for fire resistance.
- Certified according to Provincial, State and Federal Safety standards (Canadian and US) BMCSS, FMVSS, and CMVSS.

Other applicable certification labels are affixed to the component.

5.8 DOT Certification Label

This certifies that coaches manufactured by Prevost Car Inc., comply with all Federal Motor Vehicle Safety Standards at the time of manufacture. The DOT Certification label is affixed on the wall, at the L.H. side of the driver's seat under the L.H. side control panel (Fig. 6).



FIGURE 6: DOT CERTIFICATION LABEL OEH3B818

5.9 EPA Engine Label

The exhaust emission certification label affixed to the oil reserve tank certifies that the engine conforms to federal and any state exhaust emission regulations (Fig. 7). It gives the operating conditions under which certification was made.

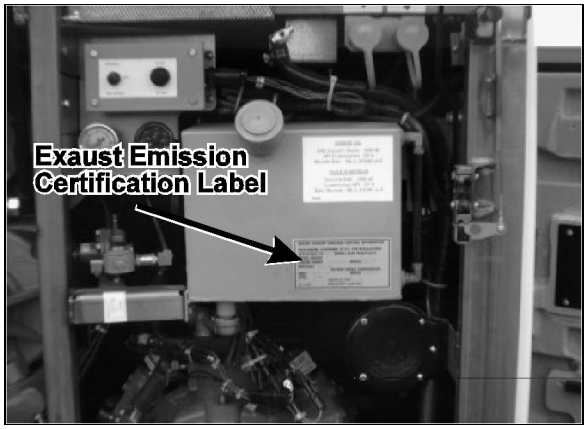

FIGURE 7: ENGINE COMPARTMENT OEH3B820

5.10 Fuel Tank Label

The fuel tank label is affixed to the R.H. side of the fuel tank (Fig. 8). To read this label, unscrew the fuel tank access panel nuts located at the left in the condenser compartment.

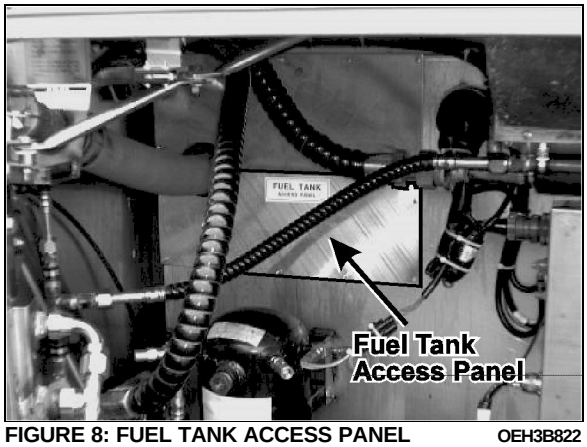

FIGURE 8: FUEL TANK ACCESS PANEL OEH3B822

5.11 Vehicle Identification Number (VIN)

The seventeen-digit vehicle identification number (VIN) is located on a plate (Fig. 9 & 10) located on the windshield frame pillar (driver's side). The VIN is visible from the outside of the coach. Make sure the correct vehicle identification number is given when ordering replacement parts. Using the VIN when ordering parts will facilitate processing.

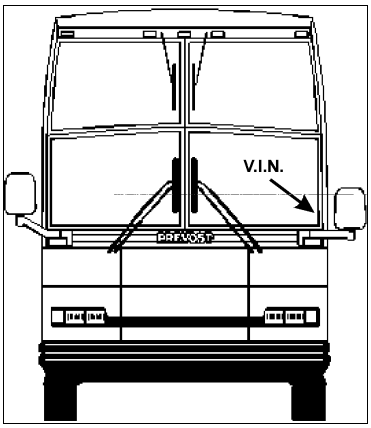

FIGURE 9: VEHICLE I.D. OEH3B816

Note: *Record the VIN in the coach documentation and keep with company records. The VIN will normally be used for vehicle registration and for obtaining vehicle insurance coverage.*

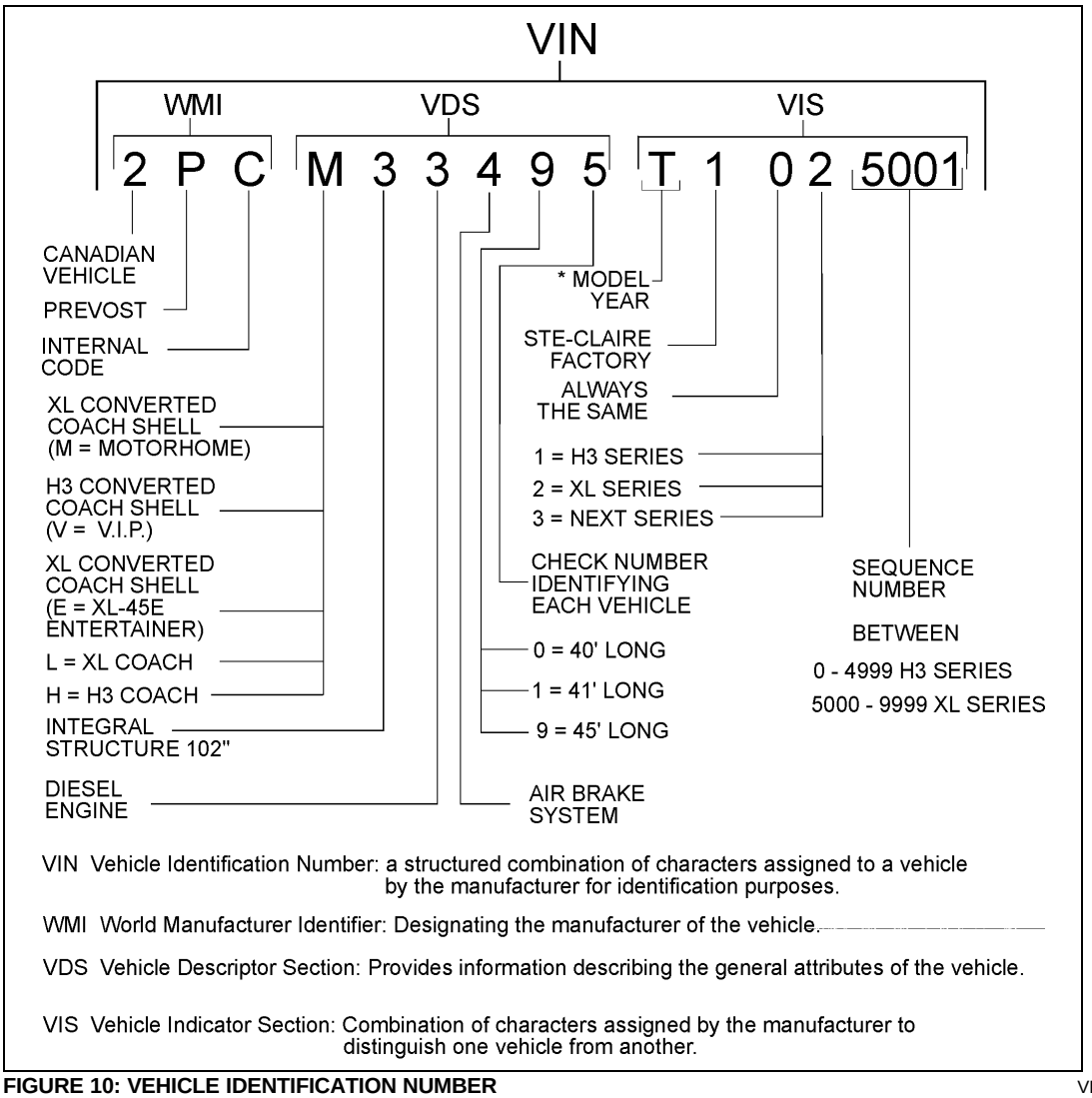

FIGURE 10: VEHICLE IDENTIFICATION NUMBER VIN

*** TABLE - CHARACTERS USED FOR DESIGNATING THE MODEL YEAR**

YEAR	CODE	YEAR	CODE
1996	T	1998	W
1997	V	1999	X

6. FASTENER STRENGTH IDENTIFICATION

Most commonly used metric fastener strength property classes are 9.8 and 10.9 with the class identification embossed on the head of each bolt. Customary (inch) strength classes range from grade 2 to 8 with radial line identification embossed on each bolt head actual grade (i.e., a grade 7 bolt will have 5 embossed radial lines on the bolt head). Some metric nuts will be marked with single digit strength identification numbers on the nut face. Fig. 12 shows the different strength markings. When replacing metric fasteners, be careful to use fasteners of the same or greater strength than the original fasteners (the same number marking or higher). It is also important to select replacement fastener of the correct size. Correct replacement fasteners are available through the parts division. Some metric fasteners available in after-market parts sources were designed to metric standards of countries other the United States and may be of a lower strength, may not have the numbered head marking system, and may be of a different thread pitch.

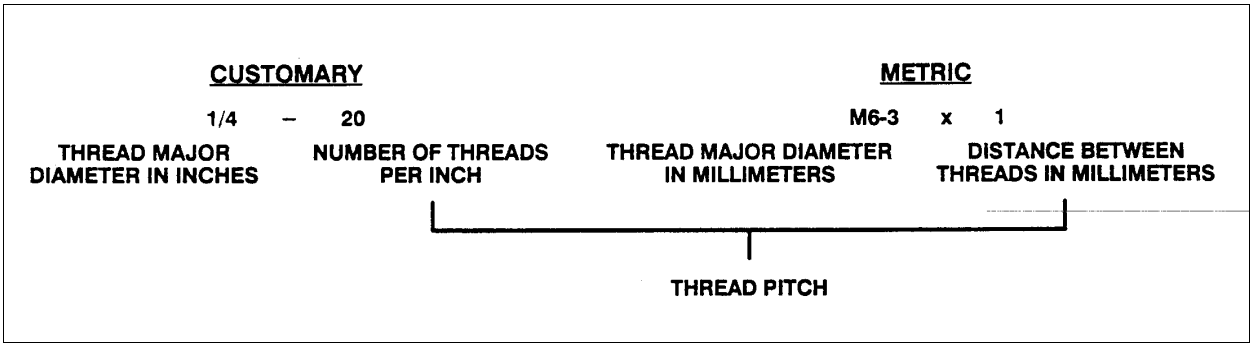

FIGURE 11: THREAD NOTATION 00002

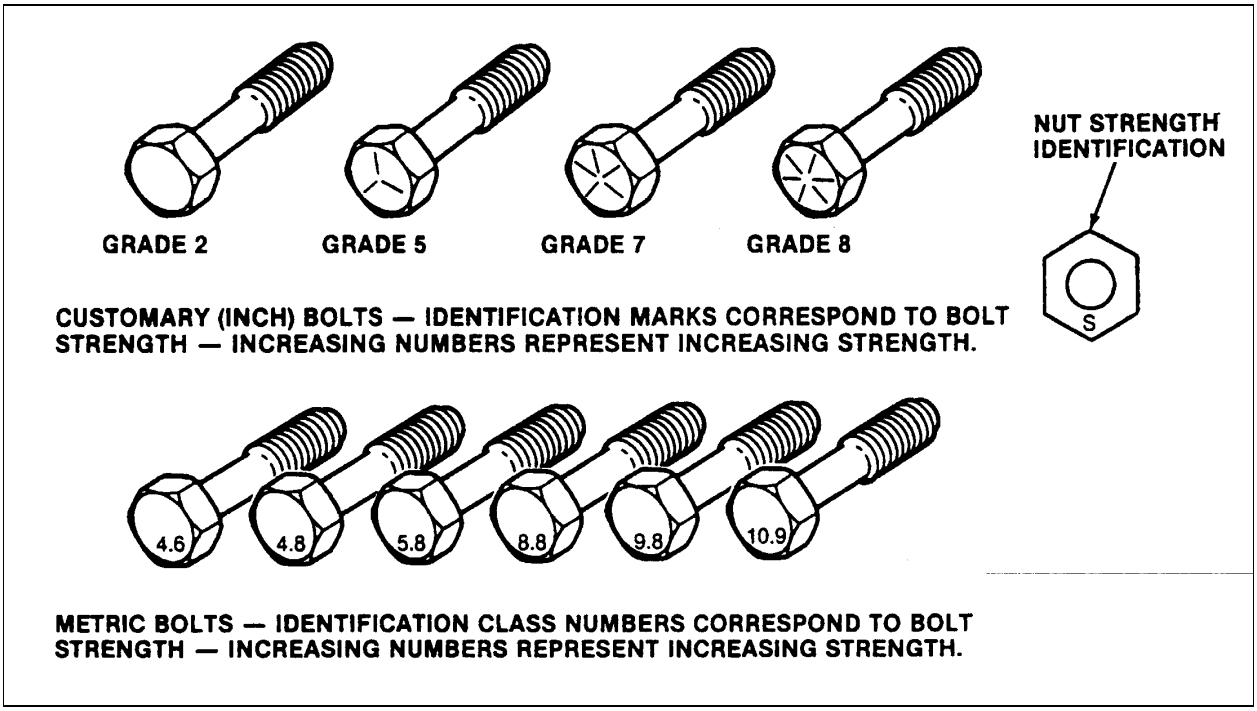

FIGURE 12: BOLT STRENGTH MARKINGS 00003

The metric fasteners used on the coach are designed to new standards and may not yet be manufactured by some nondomestic fastener suppliers. In general, except for special applications, the common sizes and pitches are :

- M 8 X 1.25
- M 10 X 1.5
- M 12 X 1.75
- M 14 X 2

6.1 Prevailing Torque Fasteners

A prevailing torque nut is designed with an interference fit between the nut and bolt threads. This is most often accomplished by distortion of the top of an all-metal nut or by using a nylon patch on the threads. A nylon insert may also be used as a method of interference between nut and bolt threads (Fig. 13).

A prevailing torque bolt is designed to develop an interference fit bolt and nut threads, or the threads of a tapped hole. This is accomplished by distorting some of the threads or by using a nylon patch or adhesive (Fig. 13).

6.2 Recommendations For Reuse

1. Clean, unrusted prevailing torque fastener may be reused as follows :

a) Clean dirt and other foreign material from the fastener.

b) Inspect the fastener to ensure there is no crack, elongation, or other sign of fatigue or overtightening. If there is any doubt, replace with a new prevailing torque fastener of equal or greater strength.

c) Assemble parts and hand start fastener.

d) Observe that , before the fastener seats, it develops torque per the chart in figure 14. If there is any doubt, replace with a new prevailing torque fastener of equal or greater strength.

e) Tighten the fastener to torque specified in the applicable section of this manual.

2. Fasteners which are rusty or damaged should be replaced with new parts of equal or greater strength.

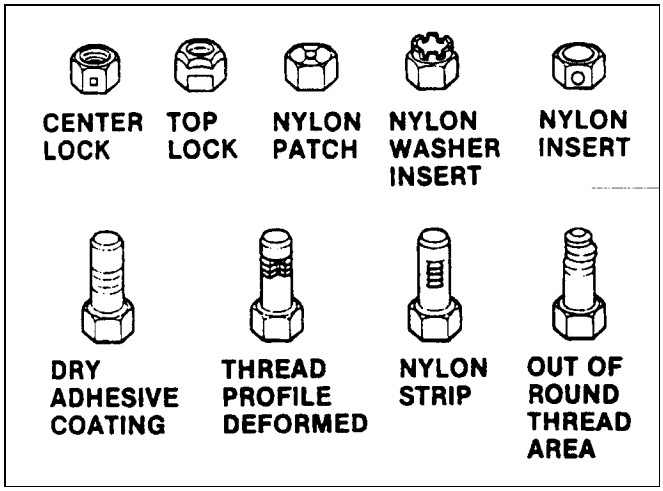

FIGURE 13: PREVAILING TORQUE FASTENERS 00004

6.3 Six Lobed Socket Head

Six lobed socket head (Torx) fastener are used in some applications on vehicles covered in this manual. The tools designed for these fasteners are available commercially. However, in some cases, if the correct tool is not available, a hex socket head wrench may be used.

FIGURE 14: TORQUE CHART

METRIC SIZES								
		6 & 6.3	8	10	12	14	16	20
NUT AND ALL	N•m	0.4	0.8	1.4	2.2	3.0	4.2	7.0
METAL BOLTS	lbf•in	4.0	7.0	12	18	25	35	57
ADHESIVE OR NYLON	N•m	0.4	0.6	1.2	1.6	2.4	3.4	5.6
COATED BOLTS	lbf•in	4.0	5.0	10	14	20	28	46

SIZES								
		.250	.312	.375	.437	.500	.562	.625	.750
NUT AND ALL	N•m	0.4	0.6	1.4	1.8	2.4	3.2	4.2	6.2
METAL BOLTS	lbf•in	4.0	5.0	12	15	20	27	35	51
ADHESIVE OR NYLON	N•m	0.4	0.6	1.0	1.4	1.8	2.6	3.4	5.2
COATED BOLTS	lbf•in	4.0	5.0	9.0	12	15	22	28	43

Multiply	by	to get equivalent number of:
LENGTH		
Inch	25.4	millimeters (mm)
Foot	0.305	meters (m)
Yard	0.914	meters
Mile	1.609	kilometers (km)
AREA		
Inch^2	645.2	millimeters^2 (mm^2)
	6.45	centimeters^2 (cm^2)
Foot^2	0.093	meters^2 (m^2)
Yard^2	0.836	meters^2
VOLUME		
Inch^3	16 387.0	mm^3
	16.387	cm^3
	0.016	liters (l)
Quart	0.946	liters
Gallon	3.785	liters
Yard^3	0.765	meters^3 (m^3)
MASS		
Pound	0.453	kilograms (kg)
Ton	907.18	kilograms (kg)
Ton	0.907	ton (t)
FORCE		
Kilogram	9.807	newtons (N)
Ounce	0.278	newtons
Pound	4.448	newtons
TEMPERATURE		
Degree Fahrenheit	(†0F – 32) ÷ 1.8	Degree Celsius (C)

Multiply	by	to get equivalent number of:
ACCELERATION		
Foot/sec^2	0.305	meter/sec^2 (m/s^2)
Inch/sec^2	0.026	meter/sec^2
TORQUE		
Pound-inch	0.113	newton-meters (N·m)
Pound-foot	1.35	newton-meters
POWER		
Horsepower	0.746	kilowatts (kW)
PRESSURE OR STRESS		
Inches of water	0.249	kilopascals (kPa)
Pounds/sq. in.	6.895	kilopascals
ENERGY OR WORK		
BTU	1 055.0	joules (J)
Foot-pound	1.356	joules
kilowatt-hour	3 600 000.0 or 3.6 x 10^6	joules (J = one W's)
LIGHT		
Foot candle	1.076	lumens/meter^2 (lm/m^2)
VELOCITY		
Miles/hour	1.609	kilometers/hr (km/h)

FIGURE 15: METRIC - ENGLISH CONVERSION TABLE

00005

DECIMAL AND METRIC EQUIVALENTS

FRACTIONS	DECIMAL IN.	METRIC MM	FRACTIONS	DECIMAL IN.	METRIC MM
1/64	.015625	.39688	33/64	.515625	13.09687
1/32	.03125	.79375	17/32	.53125	13.49375
3/64	.046875	1.19062	35/64	.546875	13.89062
1/16	.0625	1.58750	9/16	.5625	14.28750
5/64	.078125	1.98437	37/64	.578125	14.68437
3/32	.09375	2.38125	19/32	.59375	15.08125
7/64	.109375	2.77812	39/64	.609375	15.47812
1/8	.125	3.1750	5/8	.625	15.87500
9/64	.140625	3.57187	41/64	.640625	16.27187
5/32	.15625	3.96875	21/32	.65625	16.66875
11/64	.171875	4.36562	43/64	.671875	17.06562
3/16	.1875	4.76250	11/16	.6875	17.46250
13/64	.203125	5.15937	45/64	.703125	17.85937
7/32	.21875	5.55625	23/32	.71875	18.25625
15/64	.234375	5.95312	47/64	.734375	18.65312
1/4	.250	6.35000	3/4	.750	19.05000
17/64	.265625	6.74687	49/64	.765625	19.44687
9/32	.28125	7.14375	25/32	.78125	19.84375
19/64	.296875	7.54062	51/64	.796875	20.24062
5/16	.3125	7.93750	13/16	.8125	20.63750
21/64	.328125	8.33437	53/64	.828125	21.03437
11/32	.34375	8.73125	27/32	.84375	21.43125
23/64	.359375	9.12812	55/64	.859375	21.82812
3/8	.375	9.52500	7/8	.875	22.22500
25/64	.390625	9.92187	57/64	.890625	22.62187
13/32	.40625	10.31875	29/32	.90625	23.01875
27/64	421875	10.71562	59/64	.921875	23.41562
7/16	.4375	11.11250	15/16	.9375	23.81250
29/64	.453125	11.50937	61/64	.953125	24.20937
15/32	.46875	11.90625	31/32	.96875	24.60625
31/64	.484375	12.30312	63/64	.984375	25.00312
1/2	.500	12.70000	1	1.00	25.40000

FIGURE 16: CONVERSION CHART - CUSTOMARY AND METRIC 00006

7. MAINTENANCE MANUAL - TABLE OF CONTENTS

The Table of Contents on this page indicates the sections covered in this manual. At the beginning of each section is a Table of Contents which gives the page number on which each subject begins.

ENGINE **01**

CLUTCH **02**

FUEL SYSTEM **03**

EXHAUST SYSTEM **04**

COOLING SYSTEM **05**

ELECTRICAL SYSTEM **06**

TRANSMISSION **07**

PROPELLER SHAFT **09**

FRONT AXLE **10**

REAR AXLE **11**

BRAKE AND AIR SYSTEM **12**

WHEELS, HUBS AND TIRES **13**

STEERING **14**

SUSPENSION **16**

BODY **18**

HEATING AND A/C SYSTEMS **22**

ACCESSORIES **23**

LUBRICATION **24**

SECTION 01: ENGINE

CONTENTS

1. ENGINE 01-3
    1.1 Description 01-3
2. ENGINE-MOUNTED COMPONENTS 01-3
    2.1 Electronic Control Module 01-4
    2.2 Electronic Unit Injector 01-4
    2.3 Synchronous Reference Sensor 01-5
    2.4 Timing Reference Sensor 01-6
    2.5 Turbo Boost Pressure Sensor 01-6
    2.6 Coolant Temperature Sensor 01-6
    2.7 Fuel Temperature Sensor 01-6
    2.8 Air Temperature Sensor 01-7
    2.9 Oil Pressure Sensor 01-7
    2.10 Oil Temperature Sensor 01-7
3. ENGINE-RELATED COMPONENTS 01-7
    3.1 Coolant Level System (CLS) 01-8
    3.2 Electronic Foot Pedal Assembly (EFPA) & Throttle Position Sensor 01-8
    3.3 Cruise Control Switch 01-8
    3.4 Diagnostic System Accessories 01-9
4. DDEC III Diagnostic Codes 01-10
    4.1 Reading Diagnostic Codes - Flash Method 01-10
    4.2 DDEC III Diagnostic Codes List 01-11
5. ENGINE OIL LEVEL 01-14
6. ENGINE OIL AND FILTER CHANGE 01-14
7. RECOMMENDED ENGINE OIL TYPE 01-15
8. WELDING PRECAUTION 01-15
9. POWER PLANT ASSEMBLY REMOVAL (Automatic and Manual) 01-16
10. POWER PLANT ASSEMBLY INSTALLATION (Automatic and Manual) 01-19
11. ENGINE MOUNTS 01-20
12. JAKE BRAKE 01-20
13. SPECIFICATIONS 01-21

LIST OF ILLUSTRATIONS

FIG. 1: DETROIT DIESEL SERIES 60 ENGINE 01-3
FIG. 2: ELECTRONIC CONTROL MODULE (ECM) 01-4
FIG. 3: ELECTRONIC UNIT INJECTOR CROSS-SECTION 01-5
FIG. 4: SRS LOCATION 01-5
FIG. 5: BULL GEAR 01-5
FIG. 6: TIMING REFERENCE SENSOR AND RELATED PARTS 01-6
FIG. 7: TURBO BOOST PRESSURE SENSOR 01-6
FIG. 8: ENGINE FUEL TEMPERATURE SENSOR 01-7
FIG. 9: ENGINE OIL PRESSURE AND OIL TEMPERATURE SENSOR 01-7
FIG. 10: ELECTRONIC FOOT PEDAL ASSEMBLY 01-8
FIG. 11: ENGINE OIL LEVEL DIPSTICK 01-14
FIG. 12: ENGINE COMPARTMENT 01-14
FIG. 13: UNDER VEHICLE VIEW 01-15
FIG. 14: ENGINE COMPARTMENT 01-16
FIG. 15: ENGINE COMPARTMENT 01-17
FIG. 16: ENGINE COMPARTMENT 01-17
FIG. 17: RUBBER DAMPER TOLERANCE 01-19
FIG. 18: POWER PLANT CRADLE INSTALLATION 01-21

1. ENGINE

1.1 Description

This vehicle is powered by a 6-cylinder, four-cycle, Detroit Diesel series 60 engine, equipped with an electronic control system (DDEC III). Two volumes of charge are used in the engine: 11 liters or 12.7 liters. Summary information on the Electronic Control System is given in this section. Complete maintenance and repair information on the engine will be found in the current DDEC III Service Manual #6SE483. Engine controls, accessories and related components are covered in the applicable sections of this maintenance manual. Engine removal and installation procedures are given at the end of this section. The DDEC system is self-diagnostic. It can identify faulty components and other engine-related problems by providing the technician with a diagnostic code. Refer to DDEC Troubleshooting Guide # 6SE492 for more complete information on diagnosis of components and system problems published by Detroit Diesel.

DDEC III (**D**etroit **D**iesel **E**lectronic **C**ontrol) controls the timing and amount of fuel injection by the electronic unit injectors (EUI). The system also monitors several engine functions using electrical sensors which send electrical signals to the Electronic Control Module (ECM). The ECM computes the electrical signals and determines the correct fuel output and timing for optimum power, fuel economy and emissions. The ECM also has the ability to display warnings or shut down the engine completely (depending on option selection) in the event of damaging engine conditions, such as low oil pressure, low coolant, or high oil temperature.

The system components are divided in two categories: engine-mounted components and engine-related components.

2. ENGINE-MOUNTED COMPONENTS

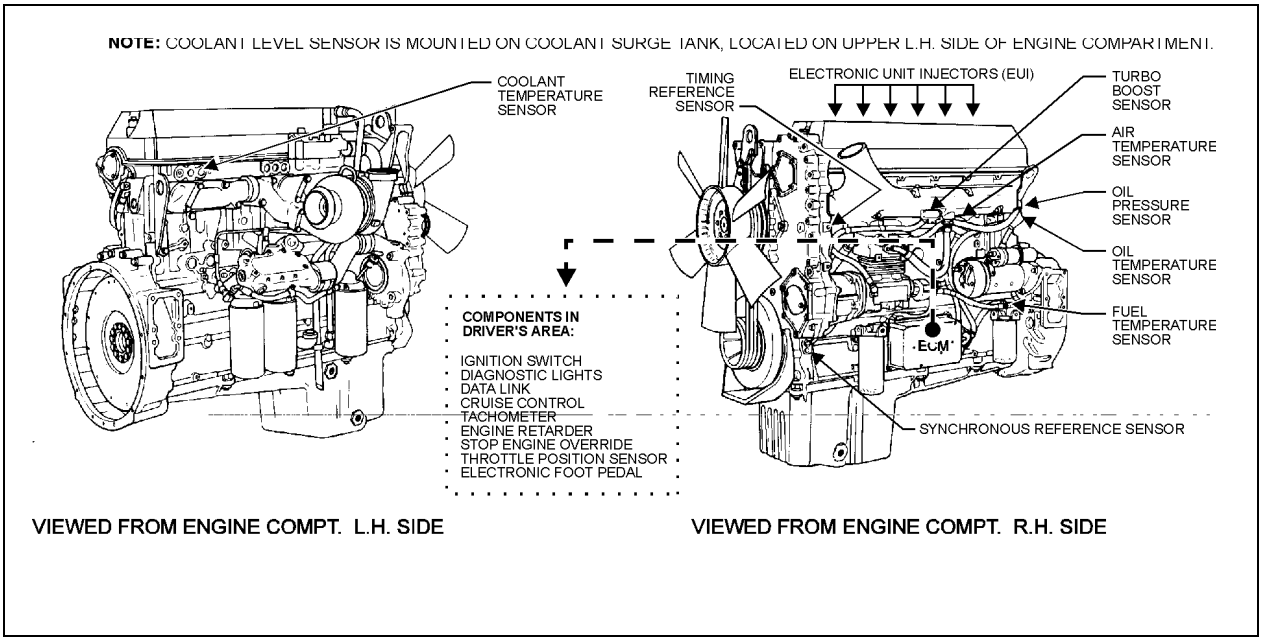

FIGURE 1: DETROIT DIESEL SERIES 60 ENGINE 01015

Engine-mounted components are as follows:

- Electronic Control Module
- Electronic Unit Injector
- Synchronous Reference Sensor
- Timing Reference Sensor
- Turbo Boost Pressure Sensor
- Coolant Temperature Sensor
- Fuel Temperature Sensor
- Air Temperature Sensor
- Oil Pressure Sensor
- Oil Temperature Sensor

2.1 Electronic Control Module

The Electronic Control Module is mounted, on the starter side of the engine (Fig. 2). It is considered the *"Brain"* of the DDEC III system because it provides overall monitoring and control of the engine by comparing input data from the various sensors to a set of calibration data stored in the EEPROM (**E**lectrically **E**rasable, **P**rogrammable, **R**ead-**O**nly **M**emory) within the Electronic Control Module. After comparing the input data with the calibrations data, the ECM sends high current command pulses to the Electronic Unit Injectors (EUI) to initiate fuel injection. The ECM also receives feedback regarding the start and end of injection for a given cylinder.

The EEPROM within the Electronic Control Module is factory programmed by Detroit Diesel. Reprogramming must be done at a Detroit Diesel authorized service center. However, some changes may be performed to the cruise control and road speed limit using a diagnostic data reader (see paragraph "4. DDEC III Diagnostic Codes" in this section).



01018

FIGURE 2: ELECTRONIC CONTROL MODULE (ECM)

2.2 Electronic Unit Injector

The Electronic Unit Injector is a compact unit that injects diesel fuel directly into the combustion chamber (Fig. 3). The amount of fuel injected and beginning of injection timing is determined by the Electronic Control Module (ECM). The ECM sends a command pulse which activates the injector solenoid. The EUI performs four functions:

- Creates the high-fuel pressure required for efficient injection
- Meters and injects the exact amount of fuel required to handle the load
- Atomizes the fuel for mixing with the air in the combustion chamber
- Permits continuous fuel flow for component cooling

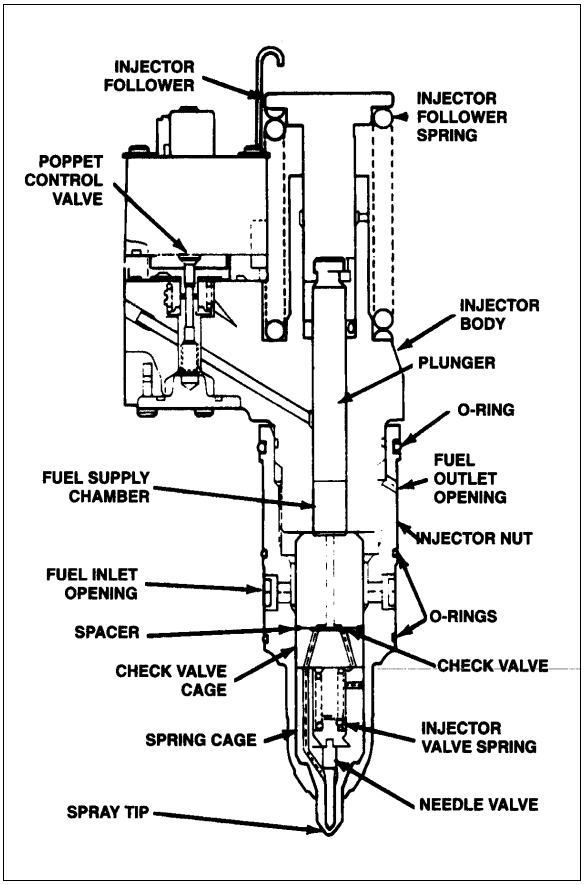

01019

FIGURE 3: ELECTRONIC UNIT INJECTOR CROSS-SECTION

2.3 Synchronous Reference Sensor

The Synchronous Reference Sensor (SRS) is an electronic component that is mounted to the rear of the gear case (Fig. 4). The SRS sensor extends through a hole in the gear case and is positioned near the rear of the bull gear. A bolt, inserted through a hole in the SRS bracket, secures the SRS assembly to the gear case. The SRS connector is black. The SRS sends a signal to the ECM. This signal is generated by a raised metal pin on the rear of the bull gear (Fig. 5).

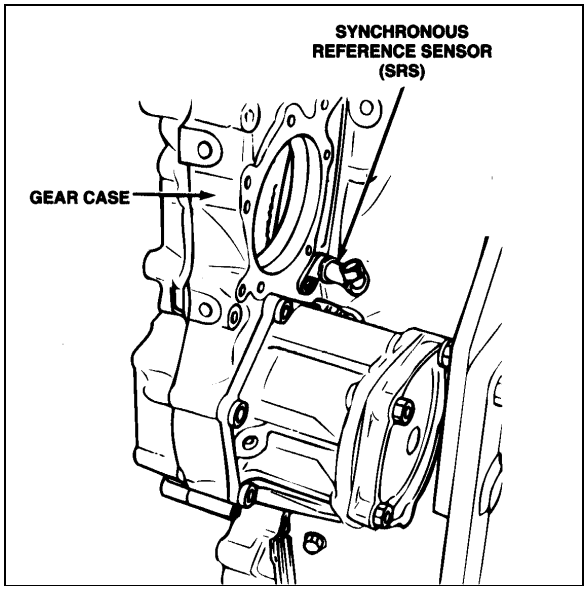

FIGURE 4: SRS LOCATION 01020

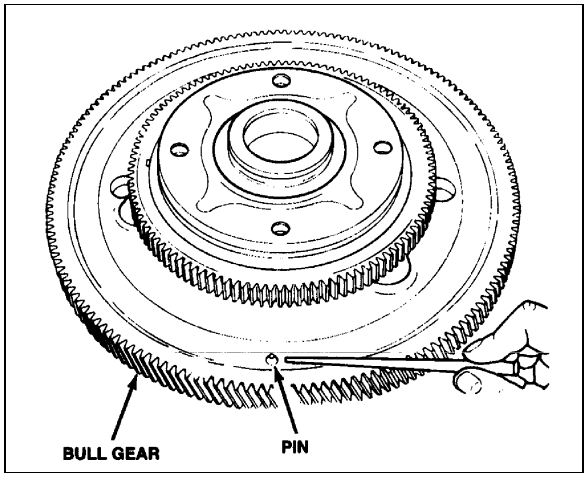

FIGURE 5: BULL GEAR 01021

The bull gear pin passes by the SRS as the number one piston reaches 45° before Top-Dead-Center. This information is used by the ECM to determine engine speed.

The SRS is non-serviceable and must be replaced as a unit. No adjustment is required.

2.4 Timing Reference Sensor

The Timing Reference Sensor (TRS) is an electronic component that is mounted on the left side of the gear case, near the crankshaft center line (Fig. 6).

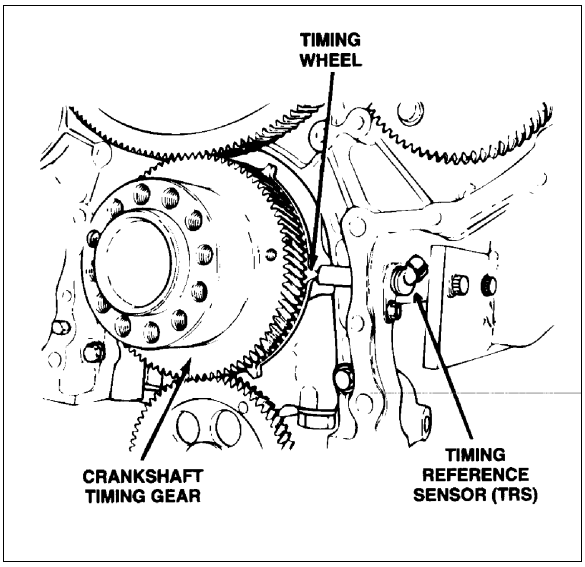

01022

FIGURE 6: TIMING REFERENCE SENSOR AND RELATED PARTS

The TRS sensor extends through an opening in the gear case and is positioned near the timing wheel gear teeth. A bolt, inserted through a hole in the TRS bracket, secures the TRS assembly to the gear case. The TRS connector is gray.

The TRS sensor sends a signal to the ECM. This is generated by a series of evenly spaced teeth on the timing wheel, rotating by the crankshaft. A tooth passes by the TRS as each cylinder reaches 10° before Top-Dead-Center. These signals are used by the ECM to determine injector solenoid operation time. The TRS is non-serviceable and must be replaced as a unit. No adjustment is required.

2.5 Turbo Boost Pressure Sensor

The Turbo Boost Pressure Sensor is mounted to the intake manifold with two bolts. A rubber O-ring is used to seal the sensor to the manifold (Fig. 7). This device is a pressure sensor that sends an electrical signal to the ECM. The ECM uses this information to compute the amount of air entering the engine. Fuel supply is regulated by the turbo boost sensor information to control engine exhaust. The turbo boost sensor is non-serviceable and must be replaced as an assembly. No adjustment is required.

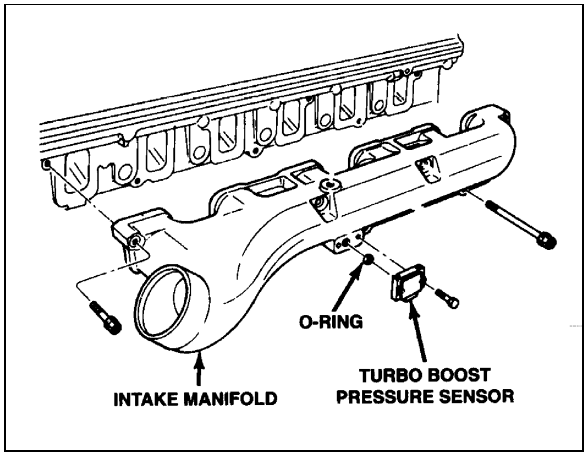

FIGURE 7: TURBO BOOST PRESSURE SENSOR 01023

2.6 Coolant Temperature Sensor

The coolant temperature sensor is mounted on the engine, on the radiator side of the engine (Fig. 1). The sensor protects the engine in case of overheating by sensing coolant temperature.

2.7 Fuel Temperature Sensor

The Fuel Temperature Sensor (FTS) is installed on the secondary fuel filter (Fig. 8). The FTS sends an electrical signal to the ECM indicating fuel inlet temperature. The ECM uses this information to calculate fuel consumption.

The FTS is non-serviceable and must be replaced as a unit. No adjustment is required.

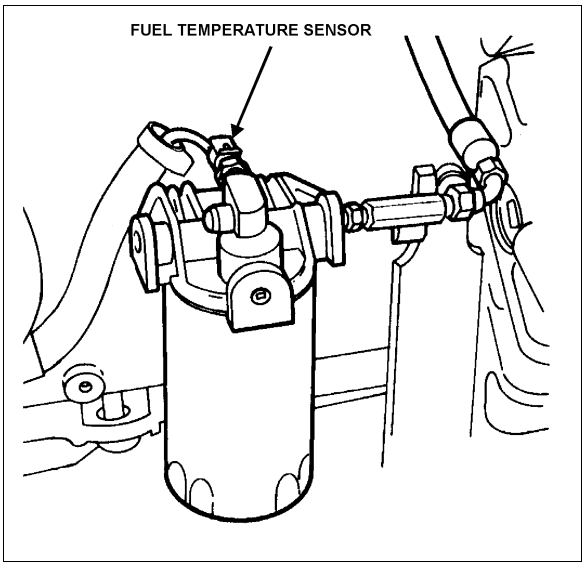

01024

FIGURE 8: ENGINE FUEL TEMPERATURE SENSOR

2.8 Air Temperature Sensor

The Air Temperature Sensor (Fig. 1) located on the engine (starter side) near the intake manifold provides input data to vary hot idle speed and injection timing. This helps to improve cold starts and reduces white exhaust.

2.9 Oil Pressure Sensor

The Oil Pressure Sensor (OPS) is installed in the main engine oil gallery. A typical location is the left rear corner of the cylinder block (Fig. 9).

The OPS sends an electrical signal to the ECM indicating the engine oil pressure at any given speed. A low oil pressure signal exceeding seven seconds is used by the ECM to begin the stop engine or warning function. The OPS is non-serviceable and must be replaced as a unit. No adjustment is required.

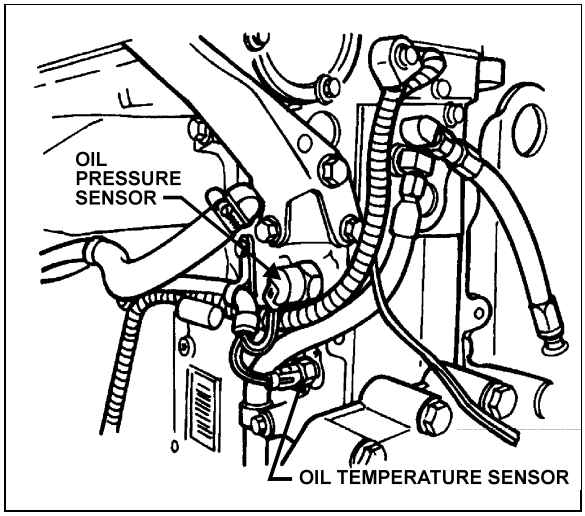

01025

FIGURE 9: ENGINE OIL PRESSURE AND OIL TEMPERATURE SENSOR

2.10 Oil Temperature Sensor

The Oil Temperature Sensor (OTS) is installed on the main engine oil gallery. A typical location is the left rear corner of the cylinder block as shown in Figure 9. The OTS sends an electrical signal to the ECM indicating engine oil temperature. The ECM uses this information to modify engine speed for better cold weather starts and faster warm-ups. Oil temperatures exceeding engine specifications for two seconds or more will illuminate the Check Engine Light. The OTS is non-serviceable and must be replaced as a unit. No adjustment is required.

3. ENGINE-RELATED COMPONENTS

Engine-related components:

- Coolant Level System (CLS)
- Electronic Foot Pedal Assembly (EFPA) and Throttle Position Sensor
- Cruise Control Switch (CCS)
- Diagnostic System Accessories (DSA)

3.1 Coolant Level System (CLS)

The coolant level system consists of a conductivity probe mounted in the surge tank and an electronic interface module located, inside the rear junction box. Coolant level is determined by the change in impedance of the probe and its brass mount when it is immersed in coolant. The electronic device in the module conditions the signal to levels compatible with DDEC. Low coolant level will trigger the warning engine functions. The probe and the electronic interface module are non-serviceable items and if found defective, they should be replaced as units. No adjustment is required.

3.2 Electronic Foot Pedal Assembly (EFPA) & Throttle Position Sensor

The Electronic Foot Pedal Assembly (EFPA) connects the accelerator pedal to a Throttle Position Sensor (TPS). The (TPS) is a device that sends an electrical signal to the Electronic Control Module (ECM) that varies in voltage, depending on how low the pedal is depressed. The system is installed in the space normally occupied by the mechanical foot pedal. The (EFPA) has maximum and minimum stops that are built into the unit during manufacturing (Fig. 10).

The (TPS) converts the operator's foot pedal input into a signal for the ECM. The (EFPA) is shown in Figure 10.

When installed by the equipment manufacturer, the TPS should not require adjustment. If the TPS is suspected of being misadjusted, confirm that the sensor is installed in accordance with the manufacturer's specifications. It is recommended that the idle count be at 50 or higher with a full throttle count of up to 200.

The TPS is self-calibrating and therefore has no optimum closed throttle or wide open throttle count value. If the counts are within the 50 to 200 range, the sensor is properly set.

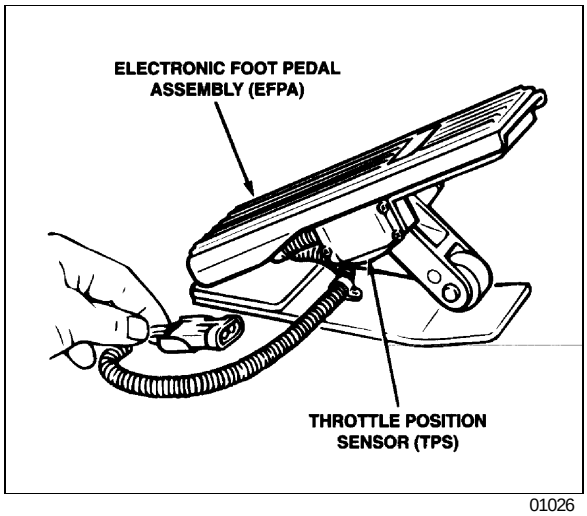

01026

FIGURE 10: ELECTRONIC FOOT PEDAL ASSEMBLY

Monitor the (TPS) as the controls move it through its full stroke. Be sure there is no misalignment or obstruction preventing the smooth movement of the TPS through the full stroke. Using a diagnostic data reader, check that the idle and full throttle position counts do not fall within the error zones. The error zones occur when the idle position is less than 14 counts, or when the full throttle position is more than 233 counts. Should these conditions occur, the ECU will signal diagnostic codes of 21-12 for idle error and 21-23 for wide open throttle error.

3.3 Cruise Control Switches (CCS)

The four cruise control switches are located in the driver's area on the L.H. side control panel.

1. **Cruise On/Off:** This is the main switch that actuates the ECM memory in order to use the speed regulating mode.

2. **Cruise Set:** This switch is used to set the cruise control speed or to decrease the set speed by 2 MPH at each application.

Note: *Cruise control system will not accept speed settings, nor will the "Resume" switch operate below 20 mph (32 km/h) and the engine speed must be above 1100 RPM.*

3. **Cruise Resume:** Each time this switch is actuated, the speed will be increased by 2 mph (3,5 km/h). This switch allows the driver return to the last regulated speed following a brake or *"DECEL"* switch application.

Note: *On-off switch must be in the "ON" position in order to return to the last regulated speed.*

4. **Cruise Decel:** Will cancel the cruise temporarily like a brake application but without actuating brake light. Set speed is still in memory for resume.

For additional information, see your "Operator's Manual"

3.4 Diagnostic System Accessories (DSA)

The DDEC III engine Diagnostic System Accessories include the following:

- Check Engine warning light;
- Stop Engine warning light;
- Stop Engine Override switch; and
- Diagnostic Data Link (DDL) connectors.

1. **Check Engine Warning Light:** This light, mounted on the central dashboard panel, illuminates to indicate that a problem is currently being detected and that a code has been stored in the ECM memory. This light also has a 5-second bulb check when the ignition is first turned on. The Check Engine Light illuminates when the temperature at coolant sensors exceeds 217°F (103°C) and the temperature at oil sensors exceeds 260°F (127°C). When sensors reach those temperatures, engine power starts to decrease linearly.

2. **Stop Engine Warning Light**: This light, also mounted on the central dashboard panel, illuminates to indicate that a major engine problem is occurring (with the exception of a 5-second bulb check when the ignition is first turned on). The Stop Engine Light illuminates when temperature at coolant sensors exceeds 222°F (106°C) and the temperature at oil sensors exceeds 239°F (115°C). When sensors reach those temperatures, the engine will shut down after 30 seconds. This 30-second delay period may be repeated using the OVERRIDE switch.

Note: *Once engine is stopped, it can not be restarted until the malfunction is corrected.*

3. **Stop Engine OVERRIDE Switch:** This switch, mounted on the L.H. lower control panel, is used when the Stop engine warning light is illuminated. Push down the switch to allow a 30-second delay period (non cumulative) in the shutdown procedure. This swicth can be repeatedly depressed, i.e. one (1) pulse is sufficient for each 30 second period, in order to move the vehicle out of traffic.

Note: *The stop engine override switch will be operative only if it has been depressed before the end of the 30 second delay period.*

Caution*: The OVERRIDE switch must be used only in emergency cases, such as to move the vehicle out of traffic. Excessive use of this switch could cause serious damage to the engine.*

4. **Diagnostic Data Link (DDL) Connectors:** A connector is mounted on the L.H. Lower Control Panel. Another connector is located in the rear electric compartment. They allow to connect the Diagnostic Data Reader (DDR) and to read the codes or to access pertinent data on the engine condition. This enables a more complete analysis of any defect found in the DDEC system operation. For more information, see Detroit Diesel Troubleshooting Guide #6SE492.

4. DDEC III DIAGNOSTIC CODES

4.1 Reading Diagnostic Codes - Flash Method:

DDEC III makes use of two types of codes: Active and inactive. The difference between the two types of codes are as follows:

1. **Active Codes:** These are the codes which are currently keeping the Check Engine or Stop Engine light illuminated. Active codes are flashed via the Stop Engine Light when check with override switch.

2. **Inactive Codes:** These are all the codes logged in the ECM (whether or not they are currently turning on the Stop or Check Engine Light). Inactive codes are flashed via the Check Engine light when checked with override switch.

In most instances, only the DDR can provide the information necessary for a quick diagnosis of the problem. If you just need to read out codes, however, and do not have a DDR available, the following procedure will let you read out codes. Make sure the rear starting switch (located in the engine compartment) is in the normal position. Momentarily depress the Stop Engine Override switch (located on the L.H. lower control panel) with the ignition ON, the engine idling or engine shut-off. Active codes will be flashed on the stop engine telltale (located on the central dashboard), followed by the inactive codes being flashed on the check engine telltale (located on the central dashboard). The cycle repeats itself until the operator depresses the Stop Engine Override Switch. A code "43" consists of four flashes, followed by a short pause, then three flashes in quick succession.

4.2 DDEC III Diagnostic Codes List

DDC Code Number (Flashed)	Description	DDC Code Number (Flashed)	Description
11	Variable speed governor sensor voltage low	12	Variable speed governor sensor voltage high
13	Coolant level circuit failed low	14	Intercooler temperature circuit failed high
14	Coolant temperature circuit failed high	14	Oil temperature circuit failed high
15	Intercooler temperature failed low	15	Coolant temperature circuit failed low
15	Oil temperature circuit failed low	16	Coolant level circuit failed high
17	Bypass position circuit failed high	18	Bypass position circuit failed low
21	EFPA circuit failed low	22	EFPA circuit failed low
23	Fuel temperature circuit failed high	24	Fuel temperature circuit failed low
25	Reserved for "no codes"	26	Aux. shutdown #1 active
26	Aux. shutdown #2 active	27	Air temperature circuit failed high
28	Air temperature circuit failed low	31	Aux. output #3 open circuit (high side)
31	Aux. output #3 short to ground (high side)	31	Aux. output #4 open circuit (high side)
31	Aux. output #4 short to ground (high side)	32	SEL open circuit
32	SEL short to battery	33	Turbo boost pressure circuit failed high
34	Turbo boost pressure circuit failed low	35	Oil pressure circuit failed high
36	Oil pressure circuit failed high	37	Fuel pressure circuit failed high
38	Fuel pressure circuit failed low	41	Too many SRS (missing TRS)
42	Too few SRS (missing SRS)	43	Coolant level low
44	Intercooler temperature high	44	Coolant temperature high
44	Oil temperature high	45	Oil pressure low

DDC Code Number (Flashed)	Description	DDC Code Number (Flashed)	Description
46	Battery voltage low	47	Fuel pressure high
48	Fuel pressure low	52	A/D conversion fail
53	Nonvolatile checksum incorrect	53	EEPROM write error
54	Vehicle speed sensor fault	55	J1939 data link fault
55	Proprietary link fault (master)	55	Proprietary link fault (receiver)
56	J1587 data link fault	57	J1922 data link fault
58	Torque overload	61	Response time long
62	Aux. output #1 short to battery	62	Aux. output #1 open circuit
62	Aux. output #2 short to battery	62	Aux. output #2 open circuit
62	Aux. output #5 short to battery	62	Aux. output #5 open circuit
62	Aux. output #6 short to battery	62	Aux. output #6 open circuit
62	Aux. output #7 short to battery	62	Aux. output #7 open circuit
62	Aux. output #8 short to battery	62	Aux. output #8 open circuit
63	PWM #1 short to battery	63	PWM #1 open circuit
63	PWM #2 short to battery	63	PWM #2 open circuit
63	PWM #3 short to battery	63	PWM #3 open circuit
63	PWM #4 short to battery	63	PWM #4 open circuit
64	Turbo speed circuit failed	65	Reserved for air filter differential pressure circuit failed high
65	Reserved for air filter differential pressure circuit failed low	66	Reserved for oil filter differential pressure circuit failed high
66	Reserved for oil filter differential pressure circuit failed low	67	Coolant pressure circuit failed high
67	Coolant pressure circuit failed low	68	Idle validation circuit fault (grounded circuit)
68	Idle validation circuit fault (open circuit)	71	Injector response time short
72	Vehicle overspeed	72	Reserved for vehicle overspeed (absolute)
73	Reserved for air differential pressure high	74	Oil differential pressure high

DDC Code Number (Flashed)	Description	DDC Code Number (Flashed)	Description
75	Battery voltage high	76	Engine overspeed with engine brake
77	All other faults not listed	81	Timing actuator (dual fuel) failed high
81	Oil level circuit failed high	81	Crankcase pressure circuit failed high
82	Timing actuator (dual fuel) failed low	82	Oil level circuit failed low
82	Crankcase pressure circuit failed low	83	Oil level high
83	Crankcase pressure high	84	Oil level low
84	Crankcase pressure low	85	Engine overspeed
86	Pump pressure circuit failed high	86	Barometric pressure circuit failed high
87	Pump pressure circuit failed low	87	Barometric pressure circuit failed high
88	Coolant pressure low	--	CEL short to battery
--	CEL open circuit	--	Clock Module failure
--	Clock module abnormal rate		

5. ENGINE OIL LEVEL

Check the oil level daily with the engine stopped. If the engine has just been stopped and is warm, wait at least 10 minutes to allow the oil to drain back to the oil pan before checking. Wipe the dipstick clean, then check oil level. The level should always be within the safe range on the dipstick (Fig. 11) . Add the proper grade of oil to maintain the correct level on the dipstick. All diesel engines are designed to consume some oil, so a periodic addition of oil is normal.

Warning: *Touching a hot engine can cause serious burns.*

Caution: *Do not overfill. Oil may be blown out through the crankcase breather if the crankcase is overfilled.*

Caution: *Clean end of tube before removing the dipstick to prevent oil contamination.*

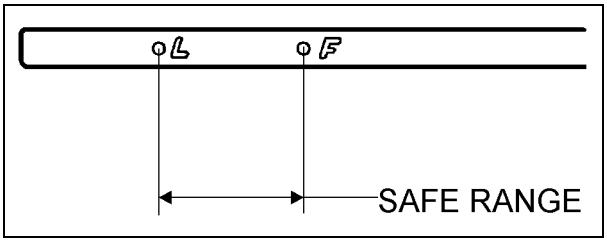

FIGURE 11: ENGINE OIL LEVEL DIPSTICK 01027

Caution: *If the oil level is constantly above normal and excess lube oil has not been added to the crankcase, consult with an authorized Detroit Diesel service outlet for the cause. Fuel or coolant dilution of lube oil can result in serious engine damage.*

The vehicle is provided with an oil reserve tank in the engine compartment which is used for the engine. To adjust oil level, open the oil reserve tank valve and allow oil to discharge into the engine until reaching the "Full" mark on the dipstick, then close the valve. Check oil reserve tank level through the level sight tube on the side of the tank and pour oil in the reserve tank if necessary (Fig. 12).

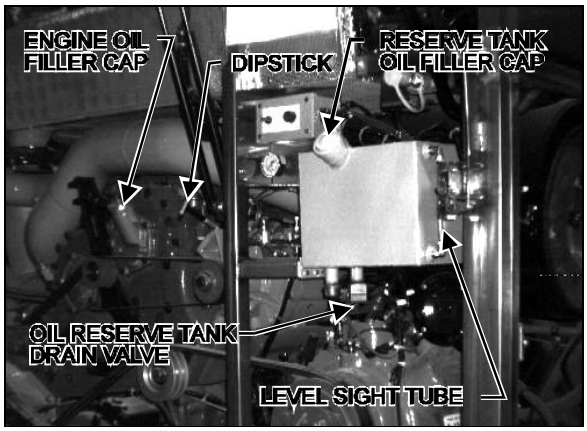

FIGURE 12: ENGINE COMPARTMENT 01028

6. ENGINE OIL AND FILTER CHANGE

Both the oil and filter should be changed every 12,500 miles (20 000 km) or once a year, whichever comes first. However, more frequent changes may be required when the engine is subject to high level of contamination and/or overheating. Change intervals may be decreased or gradually increased with experience on specific lubricants until the most practical service condition has been established. Always refer to the lubricant manufacturer's recommendations (analysis of drained oil can be helpful).

Caution: *Do not use solvent to dilute the engine oil when draining oil. Dilution of the fresh oil can occur which may be detrimental to the engine.*

Change engine oil with the vehicle on a flat and level surface and with the parking brake applied. It is best to drain the oil when the engine is still warm.

1. From under the vehicle, remove the engine drain plug on the oil pan. Allow oil to drain (Fig. 13).

Warning: *Hot engine oil can cause serious burns. Wear coveralls with sleeves pulled down and gloves to protect hands.*

2. Reinstall the drain plug.

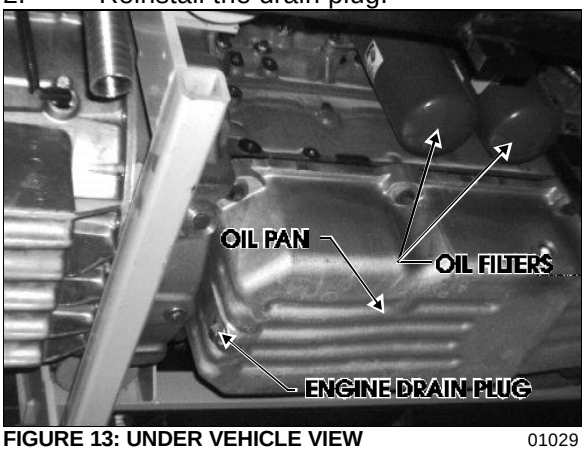

FIGURE 13: UNDER VEHICLE VIEW 01029

3. Remove the spin-on filter cartridge using a 1/2" drive socket wrench and extension.

4. Dispose of the used oil and filter in an environmentally responsible manner in accordance with state and/or federal (EPA) recommendations.

5. Clean the filter adaptor with a clean rag.

6. Lightly coat the filter gasket (seal) with clean engine oil.

7. Install the new filter on the adaptor and tighten manually until the gasket touches the mounting adaptor head. Tighten fullflow filters an additional two-thirds of a turn manually. Then, tighten bypass filter one full turn manually.

Caution: *Overtightening may distort or crack the filter adaptor.*

8. Remove the engine oil filler cap and pour oil in the engine until it reaches the "FULL" mark on the dipstick (Fig.11).

9. Start and run the engine for a short period and check for leaks. After any leaks have been corrected, stop the engine long enough for oil from various parts of the engine to drain back to the crankcase (approximately 20 minutes).

Add oil as required to bring the level within the safe range on the dipstick (Fig. 11).

7. RECOMMENDED ENGINE OIL TYPE

To provide maximum engine life, lubricants shall meet the following specifications:

SAE Viscosity Grade: 15W-40
API Classification: CG-4

Note: *Monograde oils should not be used in these engines regardless of API Service Classification.*

Note: *The use of supplemental oil additives are discouraged from use in Detroit Diesel Engines.*

Synthetic oils

Synthetic oils may be used in Detroit Diesel engines provided they are API licensed and meet the performance and chemical requirements of non-synthetic oils outlined previously. Synthetic oils does not permit extension of recommended oil drain intervals.

Lubricant Selection World Wide

Oils meeting API CD or CC specifications may be used if they also meet military specification MIL-L-2104 D or E. Oil which meet European CCMC D4 specifications may also be used. Modification of drain interval may be necessary, depending on fuel quality. Contact Detroit Diesel Corporation for further guidance.

8. WELDING PRECAUTION

1. Cut off battery power (battery master switch) from battery compartment.

2. Disconnect wiring harness connectors from ECM (Electronic Control Module). The ECM is mounted on the starter side of the engine.

3. For vehicles equipped with an automatic transmission, disconnect wiring harness connectors from ECU (Electronic Control Unit). The ECU is located in rear electrical compartment.

4. For vehicles equipped with ABS (Anti-Brake System), disconnect wiring harness connectors from ABS Electronic Control Unit. The ABS Electronic Control Unit is located in the front service compartment.

5. Cover electronic control components and wiring to protect from hot sparks, etc.

6. Do not connect welding cables to electronic control components.

7. Do the appropriate welding on vehicle.

8. Connect ECM, ECU and ABS electronic control unit.

9. POWER PLANT ASSEMBLY REMOVAL (AUTOMATIC AND MANUAL)

To access the engine or engine-related components, the vehicle power plant assembly must be removed as a whole unit by means of a slide-out cradle. The power plant assembly includes the engine, transmission (including retarder if so equipped), air compressor, alternator and transmission oil cooler.

Remove the power plant assembly as follows:

Caution: *Tag hoses and cables before disconnecting in order to facilitate reinstallation. Plug all openings to prevent dirt from entering the system.*

Note: *No parts within the ECM are serviceable. If found defective, replace the complete ECM unit.*

1. Disconnect the battery or batteries from the starting system by removing one or both of the battery cables from each battery system. With the electrical circuit disrupted, accidental contact with the starter button will not produce an engine start. In addition, the Electronic Unit Injectors (EUI) will be disabled, preventing any fuel delivery to the injector tips.

Warning: *Due to the heavy load of the rear bumper assembly, it must be adequately supported before attempting to remove it.*

2. Remove the rear bumper assembly from the vehicle. Refer to Section 18, BODY, under paragraph "6.5 REAR BUMPER REMOVAL AND INSTALLATION".

3. Drain the engine cooling system. Refer to Section 05, COOLING under paragraph "4.7 DRAINING COOLING SYSTEM".

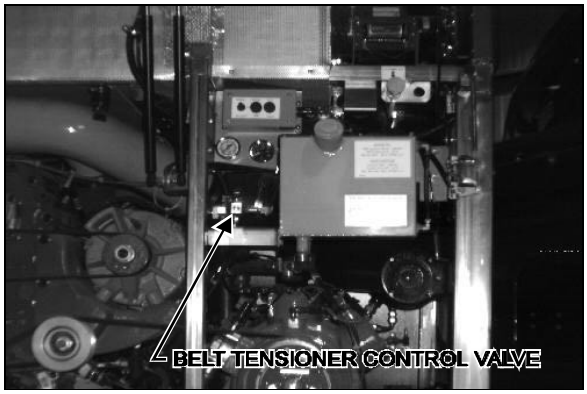

FIGURE 14: ENGINE COMPARTMENT 05035

4. Locate the belt tensioner control valve (Fig. 14). Turn handle counterclockwise in order to reverse pressure in belt tensioner air bellows and release tension on belts. Remove belts.

5. Exhaust all air from the air system. If necessary, refer to Section 12, BRAKES & AIR SYSTEM.

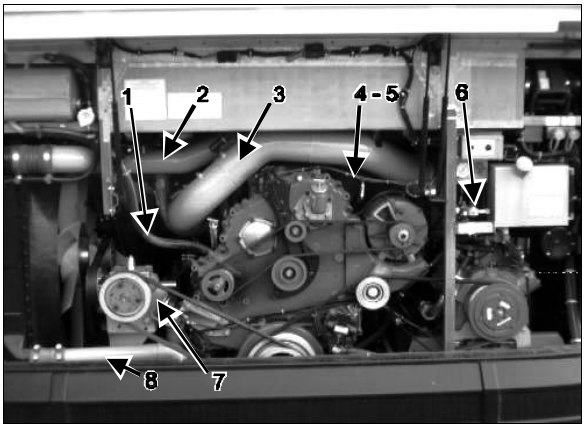

FIGURE 15: ENGINE COMPARTMENT 01030

6. Disconnect and remove the engine air intake duct mounted between air cleaner housing and turbocharger inlet (3, Fig 15).

Caution: *To avoid damage to turbocharger, cover the turbocharger inlet opening to prevent foreign material from entering.*

7. Disconnect and remove the air intake duct mounted between the air cooler outlet and the intake engine (2, Fig. 15).

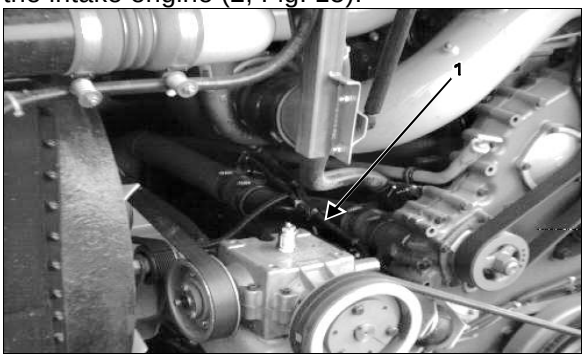

FIGURE 16: ENGINE COMPARTMENT 01031

8. Disconnect and remove section of coolant pipe assembly mounted between the radiator outlet and the water pump inlet (8, Fig. 15).

9. Disconnect the coolant delivery hose located inside of engine close to the water pump.

10. Disconnect the connector for electric fan clutch close to the water pump (1, Fig. 16).

11. Dismantle the air bellow of the upper bracket tensioner for the fan drive assembly. Remove the upper bracket (7, Fig. 15).

12. If necessary, remove the fan drive of the motor compartment by removing the four retaining bolts, washers and nuts securing the fan drive to the radiator floor.

13. Disconnect and remove the air intake duct mounted between the turbocharger outlet and the air cooler inlet.

14. Disconnect two vent hoses from the thermostat housing and from the coolant pipe assembly.

15. Disconnect and remove section of coolant pipe assembly mounted between the thermostat housings and the radia-tor inlet.

16. Disconnect and remove the small hose connected to the heater line valve and to the water pump.

17. Disconnect the small heater hose located on the cylinder head at the back of the engine.

18. Disconnect temperature sensor for the pyrometer located above the exhaust pipe, close to the turbocharger (optional).

19. Disconnect and remove the exhaust pipe mounted between the turboharger outlet and the exhaust bellows. If necessary, refer to Section 4, EXHAUST SYSTEM under paragraph "2. MUFFLER REMOVAL AND INSTALLATION"

Caution: *To avoid damage to turbocharger, cover the turbocharger outlet opening to prevent foreign material from entering.*

20. Disconnect the block heater connector above the power steering pump (on the right side).

21. Disconnect the steel-braided air line from the A/C compressor air bellows.

22. Disconnect the engine oil pressure steelbraided hose from the mechanical oil pressure gauge and the cable of the gauge water temperature (4 and 5, Fig. 15).

23. Disconnect the oil delivery hose from the valve located at the reserve tank exit.

24. Disconnect the power steering pump supply and discharge hoses. Cap hose openings immediately to limit fluid loss. Remove retaining clips from cradle.

25. Close engine fuel supply shutoff valve on primary fuel filter. Disconnect the fuel line connected to inlet port. On vehicles equipped with the optional water separator fuel filter, disconnect the connector and remove cable ties from cradle.

26. Disconnect the air compressor discharge, governor steel-braided air lines and the manual filling air lines from compressor. Remove retaining clips.

27. Disconnect the hose connecting the compressor head to the septic reservoir.

28. Disconnect ground cables from rear subframe ground stud, located close to the starting motor.

29. Disconnect positive cable (red termi-nal) from starting motor solenoid.

30. Disconnect the power plant wiring harness main connectors from EMC and remove retaining clips from engine compartment back wall.

31. On vehicles equipped with an automatic transmission provided with a hydraulic output retarder, disconnect steel-braided air line from pressure regulator output. The pressure regulator is mounted in the upper section of engine compartment back wall.

32. Disconnect fuel return line from bulk head fixed on engine cylinder head end.

33. On vehicles equipped with an electrically operated cold starting aid, disconnect the delivery hose from the starting aid cylinder solenoid valve. Remove cable ties securing hoses.

34. Disconnect turbo boost pressure gauge air line (if vehicle is so equipped) from engine air intake.

35. (Only if the vehicle is equipped with a retarder). Remove the transmission rubber damper assembly above transmission by removing: nut, bushing, rubber damper, rubber damper guide, bolt and washer. Remove the rubber damper bracket from transmission

36. Disconnect connectors from transmission. On the left side, four on rear side with one close to yoke. On right side, look close to the solenoid valve of the output retarder.

37. From under the vehicle, disconnect the propeller shaft as detailed in Section 09, under heading "Propeller Shaft".

Manual Transmission:

- **Disconnect gear shift linkage.**

- **Remove clutch slave cylinder from transmission without disconnecting the hydraulic hose.**

38. Inspect the power plant assembly to ensure that nothing will interfere when sliding out the cradle.

39. Remove the six retaining bolts, washers and nuts securing the power plant cradle to the vehicle rear subframe (Fig. 18).

Note: *Check if any spacer(s) have been installed between power plant cradle and vehicle rear subframe, and if so, note position of each washer for reinstallation purposes.*

40. Using a forklift, with a minimum capacity of 4,000 lbs (1 800 kg), slightly raise the power plant cradle. Pull engine out slowly from the engine compartment. Make sure all lines, wiring and controls are disconnected and are not tangled.

Caution*: Due to the minimum clearance between the power plant equipment and the top of the engine compartment, extreme care should be used to raise the power plant cradle, just enough to free the cradle. Clearance between power plant cradle and mounting rail should range between 1/4" and 1/2" (6-12 mm).*

10. POWER PLANT ASSEMBLY INSTALLATION (Automatic and Manual)

To install a power plant assembly, follow the same procedure as in "9. Power Plant Assembly Removal" except in a reverse order. Then proceed with the following:

1. Torque the power plant cradle mounting bolts to 113-144 lbf•ft (153-195 N•m).

2. (only if the vehicle is equipped with an automatic transmission and a retarder).

- Install the bracket from transmission (Fig. 17) (torque screw to 71-81 lbf•ft [96-110 N•m]).

- Install the transmission rubber damper assembly above transmission by assembling: bolt, washer, rubber damper guide, rubber damper, bushing nut. Respect rubber damper tolerance (58 mm) (Fig. 17).

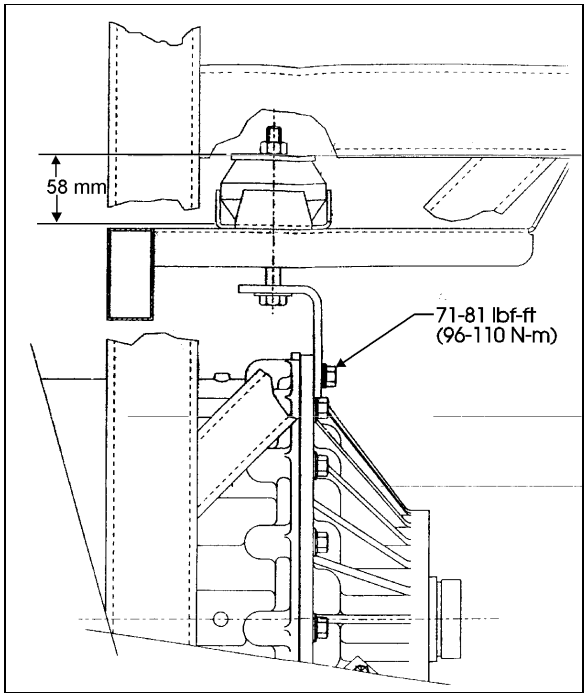

FIGURE 17: RUBBER DAMPER TOLERANCE 07014

3. If fan drive has been removed, reinstall and align as per Section 05, COOLING SYSTEM, under paragraph "10. FAN DRIVE ALIGNMENT".

4. Refill cooling system with saved fluid (refer to Section 05, COOLANT SYSTEM).

5. After engine fuel system has been drained, it will aid restarting if fuel filters are filled with fuel oil (refer to Section 03, FUEL SYSTEM).

6. After work has been completed start engine for a visual check. Check fuel, oil, cooling, pneumatic and hydraulic system connections for leakage. Test operation of engine controls and accessories.

11. ENGINE MOUNTS

The power plant assembly is mounted to the cradle by means of four rubber mounts on a vehicle powered with a series 60 engine.

Two rubber mounts are used at the front of the engine while other two are mounted on each side of the flywheel housing, on vehicles equipped with automatic and manual transmissions (Fig.18).

It is recommended that new rubber mounts be installed at each major overhaul.

12. JAKE BRAKE

Refer to both "The Jake Brake Troubleshooting and Maintenance Manual" and "Installation Manual for Models 760/760A/765 Engine Brakes" for troubleshooting and installation procedures. They are annexed to the end of this section.

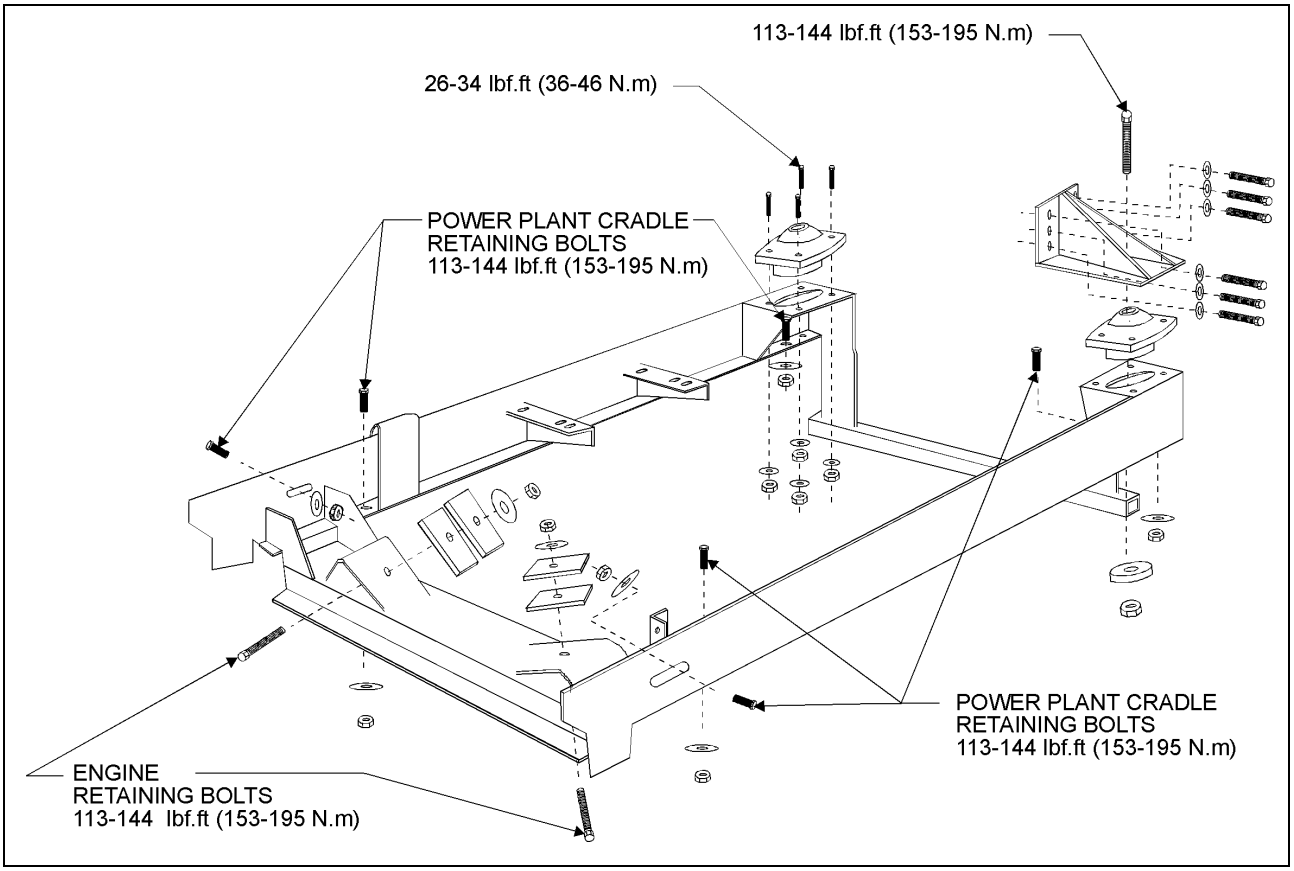

FIGURE 18: POWER PLANT CRADLE INSTALLATION 01032

13. SPECIFICATIONS

Series 60 Engines

Make ..... Detroit Diesel
Type ..... Diesel four cycle/in-line engine
Description ..... Turbo/Air to air charge cooled
No. of cylinders 6
Operating range ..... 1200-2100 RPM
Maximum RPM 2100

Model 11.1 Liter
Bore & Stroke ..... 5.12 X 5.47 in (130 X 139 mm)
Horsepower Range ..... 325 BHP

Model 12.7 Liter
Bore & Stroke ..... 5.12 X 6.30 in (130 X 160 mm)
Horsepower Range ..... 400 BHP, 470 BHP

Lubricant

Heavy-duty engine oil SAE Viscosity Grade 15W-40, API Classification CG-4 and meeting MIL-L-2104 D or E specifications. Synthetic oil may be used if it meets the performance and chemical requirements of non-synthetic oils outlined previously. Some engine operating conditions may require exceptions to this recommendation.

Caution: *To avoid possible engine damage, do not use single grade (Monograde) lubricants in Detroit Diesel four-cycle Series 60 engines, regardless of API classification.*

Capacity

Oil reserve tank.....10 US qts (9.5 L)

Engine oil level quantity

Oil Pan Capacity, Low Limit ..... 26 quarts/25 liters
Oil Pan Capacity, High Limit ..... 32 quarts/30 liters
Total Engine Oil Capacity With Filters ..... 41 quarts/39 liters

Lubricating oil filter elements

Make .....AC Rochester Div. GMC # 25014505
Make ..... A/C Filter # PF-2100
Type.....Full Flow
Prevost number.....510458

Torque specification

Engine oil filter ..... Tighten 2/3 of a turn after gasket contact

Filters

Engine Air Cleaner Filter

Make .....Nelson # 70337-N
Prévost P/N.....530197

Engine Coolant Filter/Conditioner

Make .....Nalco Chemical Company # DDF3000
Make ..... Detroit Diesel # 23507545
Prévost P/N.....550630

Note: *For primary and secondary fuel filter, refer to paragraph "12 specifications", Section 03.*

DETROIT DIESEL

SERIES 60 Service Information

NUMBER: 11–60–95 **S.M. REF.:** 13.9.1 **ENGINE:** 60 **DATE:** March 1995

SUBJECT CG–4 LUBRICATING OILS RECOMMENDED

INTRODUCTION

In January of 1995, the API (American Petroleum Institute) began voluntary licensing of API Service CG–4 lubricating oils for use in on–highway truck engines. To conform with this change, Detroit Diesel now recommends the use of CG–4 oils in Series 60 engines.

DETAILS AND REASON

Oils meeting the new CG-4 classification were developed for on-highway, emission-controlled engines operating on low sulfur fuel in applications where API CF–4 lubricants were formerly used. To conform with this API licensing change, Detroit Diesel now recommends the use of CG–4 oils in Series 60 engines and in all other DDC four–cycle products.

NOTICE:
To avoid possible engine damage, do not use single grade (monograde) lubricants in Detroit Diesel four–cycle Series 50 and 60 engines, regardless of API classification.

The recommended viscosity grade continues to be 15W-40. See Figure 1 for the API symbol required on CG–4 lubricants.

SERVICE

The phase-in of API CG-4 oils will not be immediate. Therefore, API CF–4 lubricants may continue to be used until CG–4 products become available. The use of CG-4 oils does not permit extension of oil drain intervals. Required oil drain and filter change intervals must be strictly observed when using either CG–4 or CF-4 lubricants.

For oil drain intervals and additional information on lubricating oils, refer to publication 7SE270, *Engine Requirements: Lubricating Oil, Fuel, and Fifters*, available from authorized Detroit Diesel Distributors.

ADDITIONAL SERVICE INFORMATION

Additional service information is available in the Detroit Diesel *Series* 60 *Engine Seruice Manual, 6SE483*. The next revision to the *Series* 60 *Engine Service Manual* will include this information.

-Over-

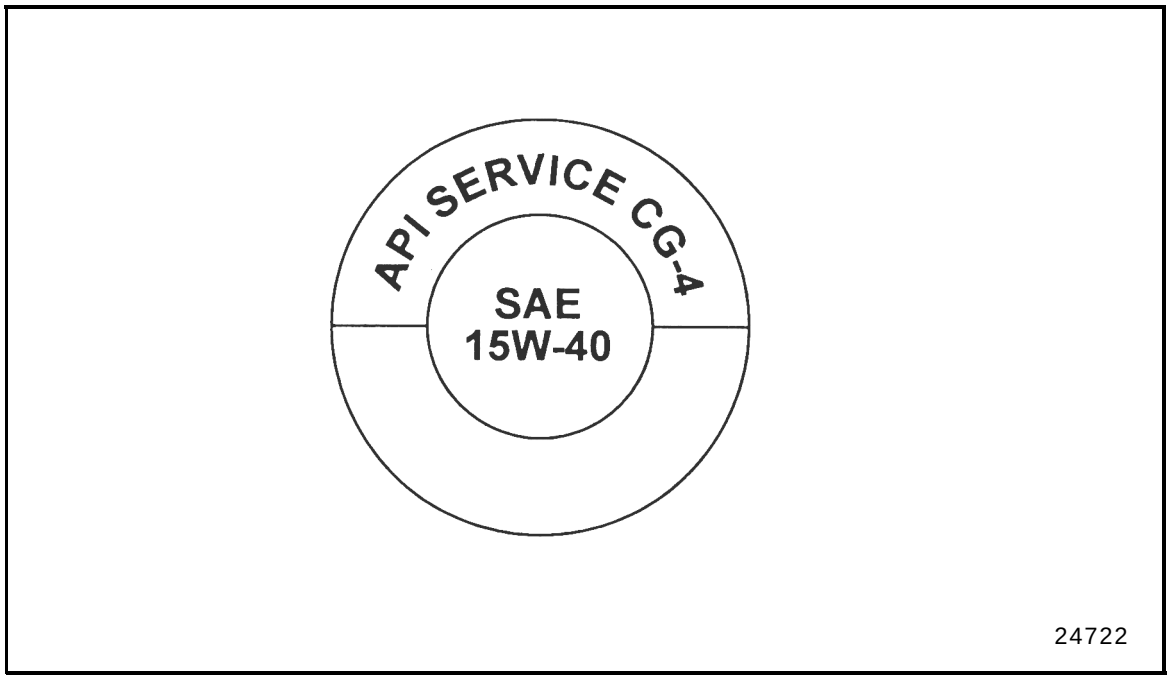

FIGURE 1 API Symbol

DETROIT DIESEL CORPORATION

13400 Outer Drive, West / Detroit, Michigan 482394001
Telephone: 313-592-5000
FAX: 313-592-7288

Detroit Diesel®, the spinning arrows, Series 50®, and Series 60® are registered trademarks of Detroit Diesel Corporation
©Copyright 1994 Detroit Diesel Corporation. Printed in U.S.A.

SERIES 60 FEATURES AND BENEFITS

The Series 60 Engine. Designed and manufactured by Detroit Diesel Corporation for the North American Heavy Duty truck market. Let's look at the Features and Benefits the Series 60 engine makes available to you as a customer in today's demanding trucking Industry,

The Series 60 engine IS a 4 cycle in-line 6 cylinder diesel engine with Integral electronic controls. It is the most advanced on-highway heavy duty diesel engine in the market today, The design started in 1980 with a desire to develop a fully electronic controlled diesel engine that would take the trucking industry through the 90's and beyond.

That IS why the Series 60 engine is a completely new design and not an attempt to rework an existing product.

Detroit Diesel listened to the customers needs, looked at the future stringent emission standards, and added their own objectives during the development stages of the Series 60 engine. They quickly realized that improvements on existing technology and the development of new technology was necessary to meet their objectives.

The end result is an Electronically controlled governing system that helps the Series 60 engine meet the stringent emission regulations of the 1990's and beyond. The simplistic design and dependable electronic controls improve reliability, durability, and offer reduced engine maintenance.

Detroit Diesel offers the Series 60 with two (2) engine displacements. The 11.1 liter and 12.7 liter versions. Both displacements have the same cylinder diameter with **a** longer piston stroke for the 12.7 liter engine. The horsepower range of the Series 60 is from the 11.1 liter at 285 hp to the 12.7 liter at 450 hp.

Both the 11.1 liter and the 12.7 liter look physically the same because they both use the same external parts like the cylinder block, the cylinder head, the rocker cover and oil pan. In fact there are only eight parts that are different between the 285 hp 11.1 L and the 450 hp 12.7L engine.

Those parts include the crankshaft, connecting rod, oil cooler, vibration damper, and crankshaft gear to build the larger bore engine, with different camshaft, injectors, and turbocharger for engine performance.

Each engine displacement has two (2) families of engine power ratings. The 11.1 liter ratings are from 285 to 350 hp, while the 12.7 liter ratings are from 365 to 450 hp.

With in an engine family the horsepower can be changed by reprogramming the ECM. The cost for this programming change is minimal and can increase the residual value of the vehicle, Just contact your local Detroit Diesel Distributor for the simple re-programming of the electronic control module. Make sure the engine support systems such as the radiator and drive train components have sufficient capacity to handle any increased horse power and peak torque changes.

Now lets look at a performance curve of the Series 60 engine. Here IS an 11,1 liter, 320 hp. 1800 RPM engine. Notice the engine peak torque IS at 1200 RPM's, Also notice that the fuel curve stays almost flat throughout the operating range of the engine. This feature offers more consistent fuel economy throughout the engine performance range, a wider operating range for the truck, and less shifting for the driver.

The electronic engine control offers cruise control similar to a passenger car. Detroit Diesel expanded this feature to offer Cruise Power This feature offers engine horse power chosen for normal truck operation and a higher horsepower during the cruise control operation.

For example, the 11.1 liter offers a 320/350 hp cruise power option. This means that 320 hp IS available during normal engine operations and 350 hp IS available while operating in cruise control. This option gives the driver more power for climbing hills, more power for fighting head winds, and more power means less shifting Feed back from the drivers indicate they really Iike this feature and operating the vehicle in cruise control promotes better fuel economy.

As you know the Series 60 has a reputation for being an efficient and reliable engine. Some physical features which contribute to this success include:

Air to air charge cooling. Cooler, denser intake air helps engine efficiency.

The **cylinder block** has a simple, clean design.This design includes serpentine external walls for noise reduction. The absence of push rod cavities in the block allows for a more evenly spaced bolt hole pattern around each cylinder bore This gives the engine a more uniform cylinder head bolt clamp load.

The **cylinder head** is a one piece casting it holds the overhead camshaft, the thermostats, and provides more rigidity to the cylinder block. The 38 cylinder head bolts create 1,000,000 Ibs clamp load to the cylinder head gasket. The fire deck of the cylinder head has machined slots between the cylinders to provide thermal stress relief.

The **overhead camshaft** eliminates the need for push rods and related hardware. The sturdy rocker arm assembles operate directly off the camshaft making it possible to have very high fuel injection pressures. These high injection pressures are necessary for maximum fuel economy and reducing engine exhaust emissions. However, engines with push rods also require higher injection pressures to meet todays stringent emission standards,

The **crankshaft** is very strong, is very durable, and has the largest main and rod bearing journal diameters of any diesel engine manufactured in the United States, For this reason, the rod bearings and main bearings do not have a recommended change Interval, Under normal operating conditions the bearings will last until engine overhaul,

The **piston assembly** is a Detroit Diesel cast iron cross-head, two piece design. The fire ring groove is near the top of the piston to minimize dead space during combustion. The piston assembly has a dome, a skirt, a piston pin and piston pin bearing. The top two rings are keystone design to prevent sticking. The skirt has tin plating to assist break-in and eliminate scuffing during test. The piston pin holds the entire assembly together with the connecting rod bolted directly to the pin.

Jacobs Manufacturing designed an engine brake specifically for the Series 60 engine, The braking system is electrically linked to the electronic control Module, and offers responsive and excellent braking performance to the driver.

A very Important component in the Series 60 engine is the **electronic unit injector.** Detroit Diesel used a mechanical unit injector since they started building enginesim 1938. It was redesigned to include a solenoid which operates a valve inside the injector. The valve wiII regulate fuel injection duration and injection timing with electrical commands from the Electronic Control Module or ECM.

Diagnosing the injector is simple with the ECM and a hand held Diagnostic Data Reader or a DDR. Using this equipment will eliminate any guess work as to the performance of any injector in the engine.

Some additional premium features of the Series 60 engine include the use of **grade eight** (8) cylinder head bolts, durable **roller bearings** for the accessory drives, **silicone hoses** for the cooling system, and **viton o-rings** to seal between the liner and block and the injector tube areas of the engine. The block and head casting are also **pre-painted** to maintain a clean and rust free engine appearance.

As you can see the Series 60 is truly a world class diesel engine that incorporates state of the art technology and assembly procedures. Now lets look at the other major contributing factor that makes the Series 60 engine so successful. The Detroit Diesel Electronic Control system.

The DDEC system consists of the ECM, the Electronic unit Injectors, various engine mounted sensors, a coolant level sensor in the radiator, and an electronic foot pedal assembly located in the Vehicle The ECM micro processor wiII compile data from the sensors and control engine operation as conditions change for maximum engine performance.

These are the engine sensors that the ECM uses to maintain engine performance Notice that DDEC monitors fuel temperature, 011 temperature, and the engine coolant level . The Turbo boost sensor monitors boost to control engine acceleration smoke,

Another feature of the DDEC system IS the programmable options available to the customer These options include:

★ **Engine protection** shutdown features,

★ **Programmable governor RPM droop** which makes the engine more driver friendly,

★ **Engine idle time from 1 to 100 minutes.** When activated this option can help reduce fuel costs and engine wear from excessive idling.

★ **High engine idle** is available with a PTO switch or with the cruise control switch system. In this mode DDEC is a variable speed governor throughout the engine operating range.

★ **Road speed governing** and **Cruise control** tailor the vehicle road speed to the customers needs. DDEC will calculate vehicle speed from the axle ratio, transmission top gear ratio, tire revolutions per mile, and vehicle speed sensor. From these calculations DDEC can now control the vehicle road speed while operating in high gear. Cruise Control is available in all gears above 1200 engine RPM.

The DDEC system offers many benefits to you as a customer. These benefits include:

An Engine protection feature that stops a running engine when sensors detect a condition that could cause engine damage. A red stop engine light and a yellow check engine light on the vehicle instrument panel will appear while DDEC will identify the problem with a code logged in its non-volatile memory. An audible warning system may be available from your OEM.

The **ECM diagnostics** offer: an active code display from the DDR with a check engine warning light on the vehicle dash board, Historical diagnostic codes stored in von-volatile memory for future retrieval, Engine performance checks, injector cylinder cutout, and an active engine sensor data display from the DDR. DDEC Reduces Maintenance by eliminating the high and low idle spring adjustments of a mechanical governor, the adjustments of smoke control devices like throttle delay or fuel modulator, the injector rack adjustment, the governor gap settings, compensations for mechanical governor wear, and adjustments with mechanical throttle linkage connections.

The **DDR** will also display the basic engine data such as engine serial number or the programmable option features of the engine. (26) The DDR hardware includes a housing with a liquid crystal display and a removable cartridge for any custom EPROM upgrades to the DDEC software system.

The **engine protection** feature of the DDEC system will shut the engine down in 30 seconds if the radiator coolant level is too low, if the oil pressure is too low for the engine speed or, if the oil temperature is too high. Should one of these conditions occur, the historical data will record the engine hours of the first occurrence, the number of occurrences, and the total time the engine ran in this condition.

During the engine shutdown sequence the driver can use an engine shutdown override switch. This switch gives the driver a repeatable thirty seconds to move the vehicle into a safe location. However, the historical data will reveal how many times the driver used the override switch.

Reprogramming, upgrading or changing engine performance is a very simple procedure with the DDEC system. Just contact your local Detroit Diesel Distributor. From their location they can access the main frame computer whitch stores the DDEC engine calibrations of every Detroit Diesel engine. The Distributor uses a P. C., a modem, and ECM plug-in hardware to reprogram the DDEC system, The fee for these changes is minimal and can help increase residual value at time of trade-in.

This presentation is a brief overview of the Series 60 features and benefits. Detroit Diesel is proud of the Series 60 engine product line and Its acceptance in the marketplace, The Series 60 engine is our commitment to your future, by providing the trucking industry with a durable and reliable engine with excellent fuel economy.

We are confident that once you try the Series 60 you will realize the importance of selecting the right product for your business future. The Series 60 engine is the product that will take you through the 90's and beyond. The Series 60, a commitment to the future,

$20.00

Troubleshooting and Maintenance Manual



Jacobs®

Jacobs®, Jake Brake®, Auto-Lash® and Power-Lash® are registered trademarks of
Jacobs Vehicle Equipment Company
22 East Dudley Town Road
Bloomfield CT 06002

P/N 013680B
©1995 JACOBS VEHICLE EQUIPMENT COMPANY
PRINTED IN USA 7/95

Table of Contents

Section 1: Troubleshooting

Introduction 1
Safety Precautions 1
Engine Brake Part Replacement 1
Automatic Transmissions 1

1.1 Electrical System 1.1

Electric and Electronic Controls 1.1.1
Required Tools 1.1.1
Preliminary Electrical Checks 1.1.1
Clutch Switch 1.1.2
Fuel Pump Switch (Cummins PT Fuel Pump) 1.1.2
Diode Protection 1.1.2
Buffer Switch Adjustment 1.1.3
Fuel Pump Switch Adjustment - CAT 1.1.3
Foot Switch 1.1.4
Solenoid Valve 1.1.5
Troubleshooting: CAT PEEC Controls 1.1.7
Troubleshooting: DDEC II Electronic Controls 1.1.11
Troubleshooting: Low Engine Speed Retarder Cut-off 1.1.17
Wiring Diagrams 1.1.21

1.2 Hydraulic/Mechanical 1.2.1

Theory of Operation 1.2.1
Operational Sequence 1.2.1
Brake Housings and Rocker Groups Inspection 1.2.2
Engine Brake Housing Oil Pressure Check 1.2.2
Preliminary Checks 1.2.4
Control Valve Component Inspection 1.2.4
Engine Brake Housing Oil Pressure Requirements 1.2.5

1.3 General Problem Analysis 1.3.1

Tools and Parts Available 1.3.1
General Problem Analysis 1.3.2

1.4 Engine Brakes for Cummins Engines 1.4.1

Two-valve Design 1.4.1
Current Production Models 1.4.1
Special Features 1.4.2
Operation 1.4.2
Single-valve Design 1.4.3
Spécial Features 1.4.4

1.5 Engine Brakes for Caterpillar Engines 1.5.1

Model 346D 1.5.1
Special Features 1.5.1
Model 349A 1.5.2
Exhaust Blowdown 1.5.3
Slave Piston Adjustment 1.5.4
Trigger Valve Adjustment 1.5.5
Models 317D/31 7E 1.5.7
Power-Lash 1.5.7
Housing Assembly Differences 1.5.8
Slave Piston Adjustme 1.5.9
Mounting Studs 1.5.9
Models C336/336A 1.5.10
Exhaust Valve Stem Caps 1.5.10
Slave Piston Clearance Settings 1.5.11

1.6 Engine Brakes for Detroit Diesel Engines 1.6.1

General Application Information 1.6.1
Adjustment of Engine Brake Slave Pistons 1.6.1
Special Features/Procedures 1.6.2
Fuel Pipe Installation 1.6.3
Fast Idle Buffer Switch 1.6.4
Models 760/760A/765 ..... 1.6.7
Engine Identification 1.6.7
Slave Piston Adjustment 1.6.7
Housing Mounting Bolts 1.6.7
Ball Check Valve (Model 760 Only) 1.6.8

1.7 Engine Brakes for Mack Engines 1.7.1

General Application Information 1.7.1
Special Features/Procedures 1.7.1
Valve Stem Caps 1.7.1
Slave Piston Adjusting Screw 1.7.2
Oil Supply Screw (675/675A) 1.7.2
Slave Piston Adjustment 1.7.3
Exhaust Valve Yoke Replacement 1.7.3

Section 2: Preventive Maintenance

Introduction 1

Recommended Preventive Maintenance Schedule 1

2.1 Inspection Criteria 2.1.1

Safety Valve Screw Assembly Inspection 2.1.1
Exhaust Crosshead/Bridge or Valve Stem Cap Inspection 2.1.1
Master Piston Inspection 2.1.2
Injector/Exhaust Rocker Arm Adjusting Screw Inspection 2.1.2
Slave Piston Inspection 2.1.3
Crosshead Screw and Pin Assembly Inspection 2.1.3
Slave Piston Adjusting Screws Inspection 2.1.4
Control Valve Inspection 2.1.4

Section 1: Troubleshooting

Introduction

Jacobs Engine Brakes are manufactured to the highest standards of quality. Care has been taken in every step of manufacture to produce a product capable of functioning reliably at normal and peak performance. This manual has been prepared to assist the operator and mechanic in correct maintenance and troubleshooting procedures that ensure satisfactory engine brake operation.

Troubleshooting, as discussed in Section 1, is a step-by-step procedure to determine the cause of malfunctions and problems interfering with satisfactory engine brake operation. Malfunctions and/or problems occurring in the Jake Brake can be classified as Electrical or Hydraulic/ Mechanical in nature. To effectively troubleshoot the engine brake system, the mechanic must have a working knowledge of these two systems.

Section 1 also describes the basic operation of engine brakes and components, and recommends procedures to follow when troubleshooting.

Proper maintenance, as discussed in Section 2, will assure maximum engine brake performance and a reliable service life.

Safety Precautions

The following symbols in this manual signal potentially dangerous conditions to the mechanic or equipment. Read this manual carefully and know when these conditions can exist. Take necessary steps to protect personnel as well as equipment.



THIS SYMBOL WARNS OF POSSIBLE PERSONAL INJURY.



THIS SYMBOL REFERS TO POSSIBLE EQUIPMENT DAMAGE.

Do not work on this equipment when mentally or physically fatigued. Always wear eye protection.

Fuels, electrical equipment, exhaust gases and moving parts present potential hazards that could result in personal injury. Take care when installing an engine brake. Always use correct tools and proper procedures.

The Jake Brake is a vehicle slowing device, not a vehicle stopping device. it is not a substitute for the service braking system. The vehicle's service brakes must be used to bring the vehicle to a complete stop.

Jacobs Service Letters should be consulted for additional applications and updated information.

Engine Brake Part Replacement

Each engine brake housing assembly has an identification tag showing model number and part number. A packaged housing assembly has a different part number than the housing assembly inside the package. When ordering a replacement housing assembly, the packaged housing assembly part number must be used.

The Installation Manual should be used in conjunction with the Jacobs Parts Manual when additional replacement part information is required. The Parts Manual can be obtained from your Jacobs distributor.

For more information on driving with the Jake Brake, read your Jacobs Driver Manual.

Automatic Transmissions

For vehicles with automatic transmission, refer to Jacobs Service Publications or contact your nearest distributor.

1.1 Electrical System

Electric and Electronic Controls

Advancements in vehicle and engine controls have demanded changes to Jacobs Engine Brake control systems. New engine control systems include the following:

Caterpillar:PEEC	Cummins: CELECT
Detroit Diesel: DDEC	Mack: V-MAC

Section 1.1 Electrical System covers basic information and troubleshooting of electric and electronic control systems.

Electrical power to energize the Jake Brake should always come from a terminal on the vehicle ignition switch that is energized when the switch is turned “on”. This circuit must be protected by a 10-amp fuse or circuit breaker. The circuit is then connected to the ON/OFF switch, clutch switch, fuel pump (buffer) switch, and then to the solenoid valves.

Refer to the wiring diagram for specific engine brake models being worked on.

NOTE:

A DIODE IS INCORPORATED IN THE SYSTEM AT THE FUEL PUMP (BUFFER) SWITCH. THE DIODE PREVENTS HIGH VOLTAGE SPIKES THAT OCCUR EACH TIME THE SOLENOIDS ARE DE-ENERGIZED. THIS PREVENTS INTERNAL DAMAGE TO THE SWITCHES.

Required Tools

The following tools should be available to troubleshoot electrical problems:

1. Volt/OHM/AMP meter (digital readout)
2. Continuity tester
3. Test light

Preliminary Electrical Checks

1. **Vehicle Electrical Power.** Using a voltmeter, check to see that the supply voltage is at least 12 - 14 VDC or 24 - 28 VDC. Verify that wiring follows the correct Jacobs Engine Brake wiring schematic.

   If the truck is factory pre-wired and the power source is from a breaker panel, make sure the circuit breaker is correctly reset. Make certain power is not drawn from a source with an additional ON/OFF switch or power draw for other components.

2. **Jacobs’ Switches.** Using a voltmeter, check the dash switch, clutch switch and throttle switch for a voltage drop across each switch with the switch closed. Replace the switch if a voltage drop is 0.4 VDC or greater.

   Inspect switches for correct adjustment. Check the throttle and clutch return springs for correct adjustment and operation.

3. **Wiring.** Check for short circuit in the wiring. Replace any broken, brittle, chafed, scorched or melted wires. it is recommended that all under-hood or under-doghouse wiring be covered by Jacobs’ Auto-Loom or similar good quality loom. Replace Jacobs in-line fuse (10 amps) if blown or reset circuit breaker if necessary..

The following procedures are recommended:

Wire-end terminals should be securely attached to wires. If not, replace terminal. Wire size should be no smaller than 16 gage.

Wire-end terminals should be attached tightly to space connectors. If not, remove and replace, or if necessary, re-crimp and reattach.

Harness wire or loom should be carefully routed and should not contact moving equipment such as throttle, clutch or transmission linkage.

Harness wire or loom should not contact high temperature engine components such as exhaust manifold or turbo housings.

Harness should be secured in place with tie-wraps at regular intervals.

Clutch Switch

Adjust the switch by moving the switch along the mounting bracket. The actuator arm should be deflected 1.0-1.5" (25 - 38 mm), measured at the tip of the actuator, when the clutch pedal is in the up (clutch engaged) position.

Check installation by moving the clutch pedal. The switch should click from the open to closed position of the switch contacts in the free-play motion of the clutch pedal before actual clutch disengagement takes place.

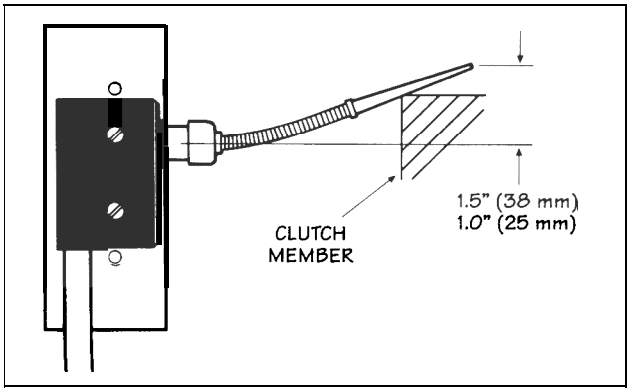

FIG. 1.1.1

CAUTION

EXCEEDING 1.5" DEFLECTION OF THE ACTUATOR ARM MAY CAUSE SWITCH DAMAGE, RESULTING IN ENGINE BRAKE MALFUCTION.

Fuel Pump Switch (Cummins PT Fuel Pump)

Move the throttle to the low idle position and insert a 0.05" (1.27 mm) feeler gage between the switch plunger and actuating lever (A, Fig. 1.1.2). Push the switch lever against the switch plunger until the plunger bottoms. Tighten the cap screw to 7 lb.-ft. (1 0 NŽm).

WARNING

AFTER INSTALLING THE ACTUATING ARM, CHECK THE FUEL PUMP THROTTLE SHAFT TO BE SURE THE THROTTLE PEDAL WILL MOVE THE SHAFT TO THE FULL FUEL POSITION. FAILURE TO DO SO MAY RESULT IN RESTRICTED ENGINE CONTROL. IF THE RESTRICTED MOVEMENT IS FOUND, CORRECT THE PROBLEM AND READJUST THE ACTUATING LEVER.

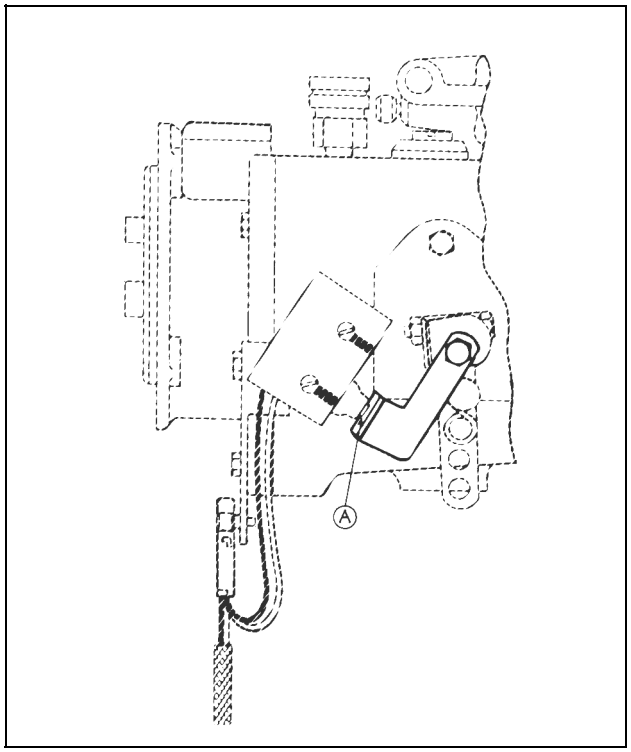

FIG. 1.1.2

Diode Protection

NOTE:

SWITCH CONTACTS ARE PROTECTED AGAINST ARCING BY A SMALL DIODE CONNECTED BETWEEN THE LOAD SIDE SWITCH TERMINAL AND GROUND. THE ENGINE BRAKE MUST BE CONNECTED TO THE LOAD SIDE TERMINAL. IF THE VEHICLE HAS A POSITIVE GROUND ELECTRICAL SYSTEM, REVERSE THE DIRECTION OF THE DIODE (FIG. 1.1.3).

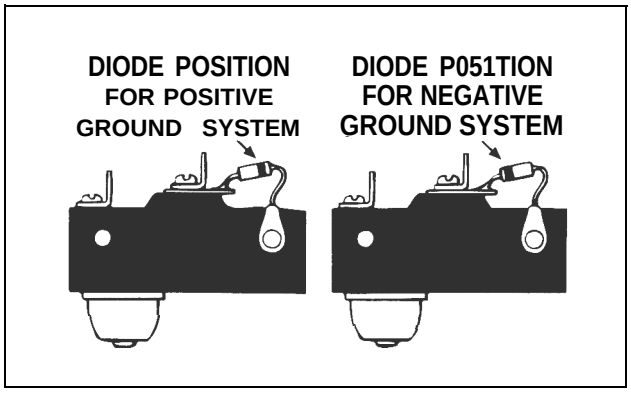

FIG. 1.1.3

Buffer Switch Adjustment

Buffer Switch - Detroit Diesel

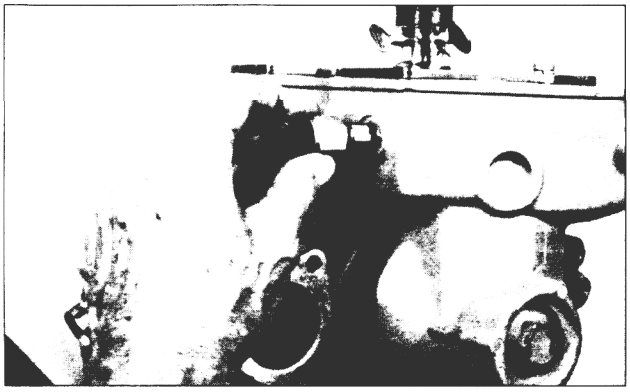

FIG. 1.1.4

1. Start the engine and allow to warm up. Record the idle RPM and maximum no load RPM.
2. With the idle speed set, adjust the buffer switch as follows:
   a. Turn the buffer switch in until it contacts the connecting link as lightly as possible and eliminates engine roll (Fig.1.1.4).

   NOTE:

   ENGINE IDLE SPEED WITH THE BUFFER SWITCH MUST NOT INCREASE MORE THAN 15 RPM FROM THE READING RECORDED IN STEP 1.

   b. Hold switch in this position and tighten locknut.

   ⚠ CAUTION

   DO NOT TIGHTEN LOCKNUT MORE THAN 60 LB.-IN. (7 NŽM). SWITCH FAILURE WILL RESULT FROM OVER-TORQUING.

   c. Check maximum no-load speed. If the increase is more than 25 RPM from the reading recorded in Step 1, back off buffer switch until increase is less than 25 RPM.
3. Shut down engine.
4. Early style buffer switches are polarity sensitive. Attach **NEGATIVE** lead (load side) to tin-plated terminal and the **POSITIVE** lead (power side) to the brass-colored terminal of the switch.
5. Current style buffer switches include a two-diode system for switch protection. The two-diode type switch is not polarity sensitive and electrical connections can be made to either terminal (see Fig. 1.1.5). This switch must only be used with negative ground systems.

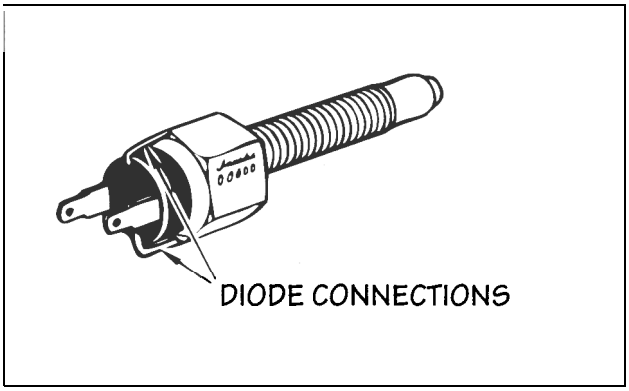

FIG. 1.1.5

Fuel Pump Switch Adjustment - CAT

1. Start engine and check low idle RPM. Disconnect the throttle linkage and adjust the idle per Caterpillar specification by turning the switch clockwise to increase and counterclockwise to decrease engine RPM (Fig. 1.1.6).

Fuel Pump Switch - Caterpillar 3406

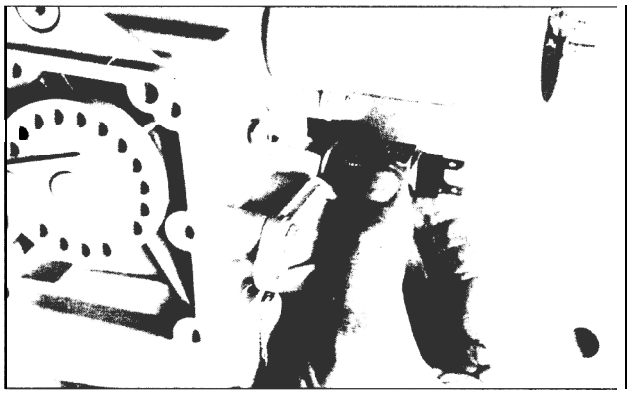

FIG. 1.1.6

2. When proper RPM is set, advance the throttle lever to increase engine speed and then return to idle. Check to be sure the idle RPM setting did not change. Readjust if necessary.

3. Hold the Jacobs switch and tighten locknut to 5 lb.-ft. (7 N*m). Reconnect throttle linkage.

If the fuel pump switch has a letter “D” or lower suffix after the part number, this switch is polarity sensitive. Connect the white wire from the engine harness to the silver terminal. Connect the orange wire from the engine harness to the brass (load side) contact. This ensures diode protection of the switches.

If the fuel pump switch has a letter “E” or greater suffix after the part number, harness wires can be connected to either switch terminal. These switches have two diodes for protection and are not polarity sensitive. This switch can only be used with negative ground systems.

⚠ CAUTION

CHECK TO BE SURE THAT THE GOVERNOR OPERATING LEVER MOVES FREELY FROM LOW IDLE TO HIGH IDLE POSITION AND RELEASES WITHOUT BINDING.

Foot Switch

Optional Jacobs Foot Switch provides added driver convenience and control. Jacobs offers three different systems for engine brake control. Besides the standard semi-automatic system used with Caterpillar, Cummins and Mack engines, the customer now has the choice of two added options: fully automatic control with a “low speed” shut-off or fully manual control with a “foot switch”.

The foot switch is installed on the cab floor within easy reach of the operator’s left foot. After installation, light foot pressure on the top plate is all that is needed to operate the Jake Brake. The throttle switch, or buffer switch, remains in the system to ensure that fueling and engine braking do not occur at the same time.

NOTE:

ENGINES WITH ELECTRONIC CONTROLS (NO FUEL PUMP SWITCH): CONNECT THE WIRES FROM THE FOOT SWITCH TO THE WIRE CONNECTING THE 12-VOLT (OR 24-VOLT) POWER TO THE DASHBOARD ON/OFF SWITCH.

Foot Switch Diagram

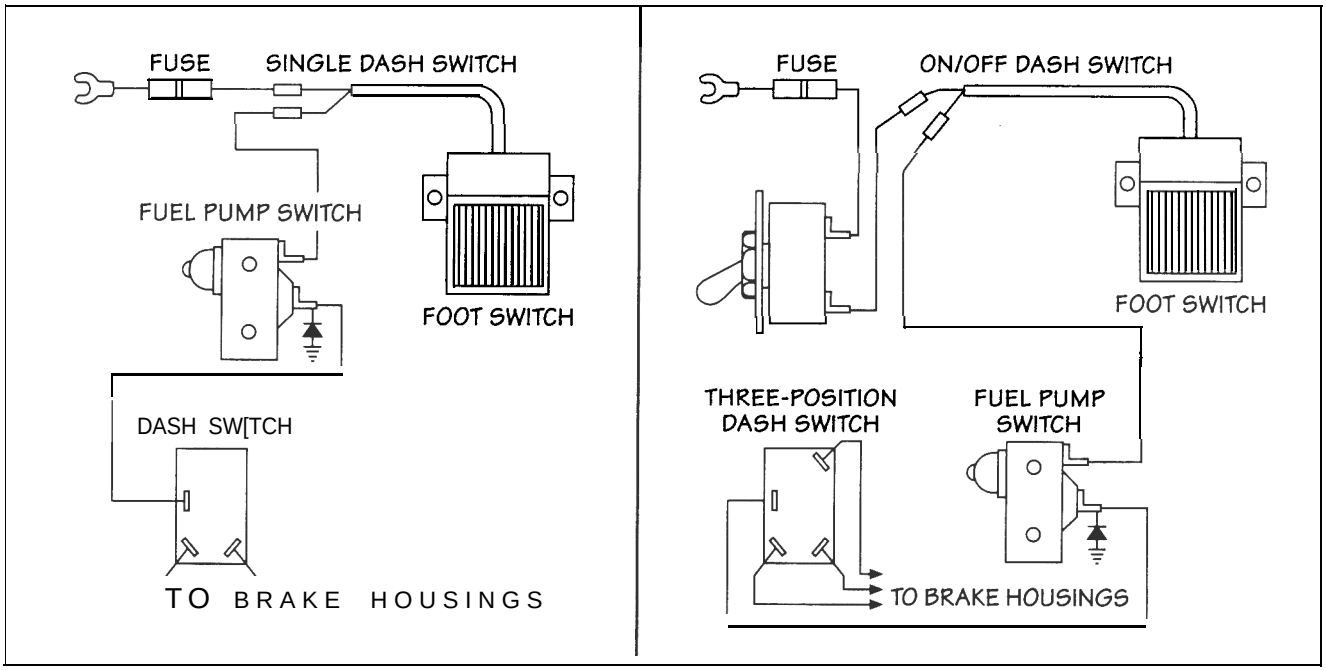

FIG. 1.1.7

Solenoid Valve

The Solenoid Valve cannot be overhauled or repaired in the field. if any problem other than seal ring-related exists, the Solenoid Valve must be replaced.

Operation Check

The best way to examine a solenoid valve coil for correct operation is with a volt/amp/ohm meter and then compare the readings for each solenoid with the proper specifications. If the proper meters are not available, a secondary check of proper solenoid valve operation can be made as follows:

⚠ WARNING

DO NOT TOUCH THE ELECTRICAL CONNECTION WHEN A SOLENOID IS ENERGIZED. ELECTRICAL SHOCK COULD RESULT.

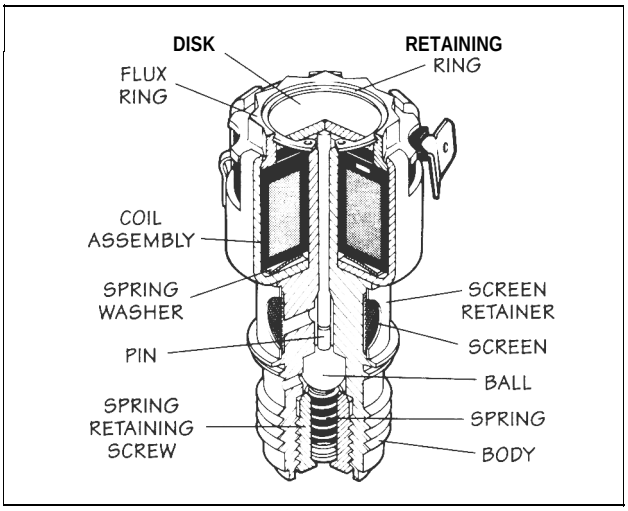

FIG. 1.1.8

1. Apply a 12-volt (or 24-volt) source to the solenoid electrical terminal.
2. When electrical power is supplied, make sure each solenoid valve cap depresses. If the cap does not depress, replace the solenoid.

		RESISTANCE (OHMS)		CURRENT DRAW (AMPS)		PULL IN VOLTAGE (MINIMUM)	
P/N	VOLTAGE	COLD	HOT	COLD	HOT	COLD	HOT
016440*	12 VDC	9.62 to 10.75	11.8 to 14.3	1.12 to 1.23	0.84 to 1.02	8.0	8.5
016441*	24 VDC	31.5 to 38.5	38.2 to 50.0	0.62 to 0.69	0.47 to 0.55	17.0	21
019650*	12 VDC D/L	9.75 to 10.75	11.8 to 14.3	1.12 to 1..23	0.84 to 1.02	8.0	8.5
016442*	24 VDC D/L	31.5 to 38.5	38.2 to 50.0	0.69 to 0.62	0.47 to 0.55	17.0	21
020239*	12 VDC	9.0 to 10.0	11.5 to 14.0	1.0 to 1.2	0.8 to 1.0	8.0 to 9.0	10.0 to 11.0
018674	12 VDC	9.5 to 10.5	11.5 to 14.0	1.15 to 1.25	0.86 to 1.04	9.5	11.9 to 12.7
013472*	24 VDC SCREW	34.9 to 38.7	43.3 to 51.3	0.62 to 0.69	0.47 to 0.55	18.0	22 to 24
003784, 004205, 003433, 002689	12 VDC	19.8 to 22.0	24.0 to 29.5	0.54 to 0.61	0.4 to 0.5	9.0	9.8 to 12.1
003784, 004205, 003433, 002689	24 VDC	19.8 to 22.0	24.0 to 29.5	1.08 to 1.22	0.8 to 1.0	9.0	9.8 to 12.1

* Current Production Solenoid Valves
D/L Dual Lead

FIG. 1.1.9

Jacobs Models 346 B/C/D) with Caterpillar PEEC* Controls

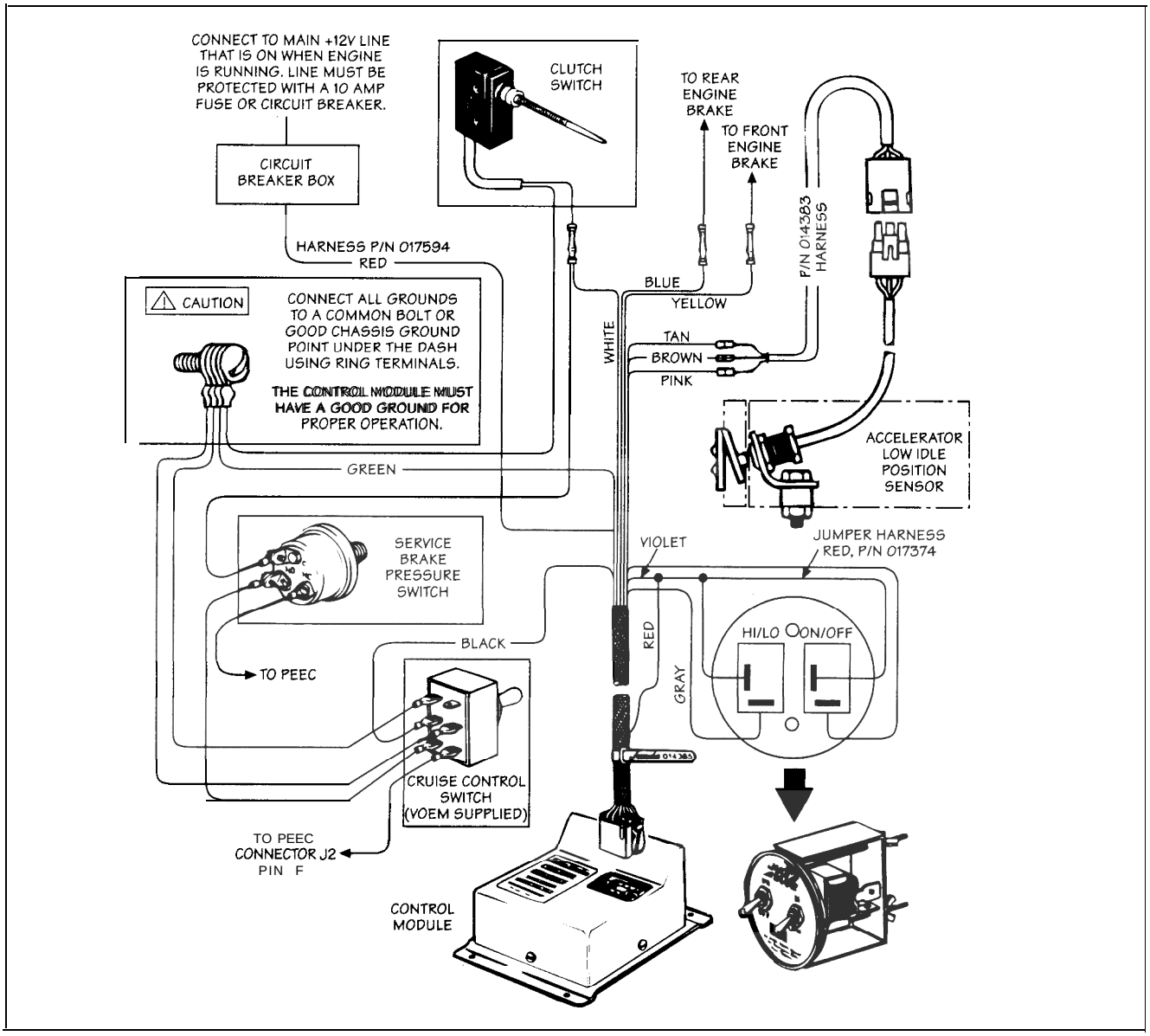

FIG. 1.1.10

* Information on Caterpillar electronics (PEEC III) applications is not covered here and will be covered in separate documents.

Troubleshooting: CAT PEEC Controls

Problem: Engine Brake is Inoperable

Probable Cause: No electrical power.

Correction: Connect VOM positive (+) probe to common (lower) terminal of ON/OFF switch and negative (-) probe to ground (Fig. 1.1.11). With ignition switch on, VOM should read +12 volts. If not, check circuit breaker or fuse and wiring to switch and repair/replace as needed.

Probable Cause: Dash switch(es) inoperative.

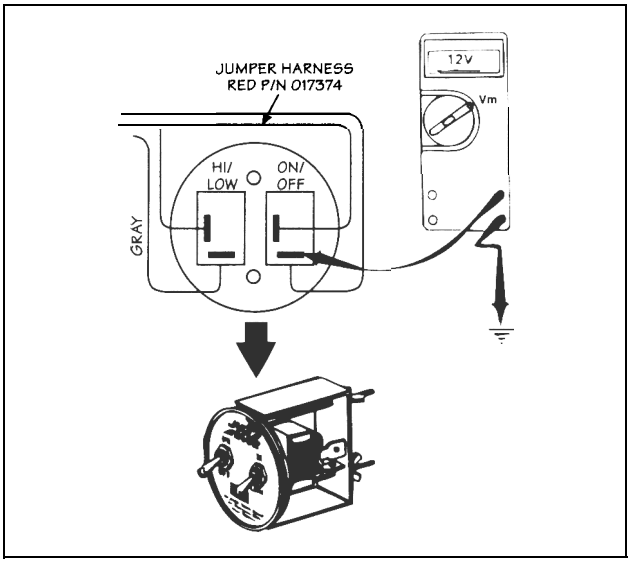

FIG. 1.1.11

Correction:

A. Connect positive (+) probe of VOM to center terminal of ON/OFF switch and negative (-) probe to ground. With system energized and switch off, reading should be 0 volts. With switch on, reading should be 12 volts. If these readings are not obtained, replace ON/OFF switch.

B. Connect positive (+) probe to center terminal of Hi/LO switch and negative (-) probe to ground. With ON/OFF switch on and HI/LO switch in lo position, reading should be 12 volts. If not, check switch jumper wire and connections and repair/replace as needed.

C. Connect positive (+) probe to lower terminal of Hi/LO switch and negative (-) probe to ground. With Hi/LO switch in lo position and ON/OFF switch on, reading should be 9 volts. With Hi/LO switch in HI position, reading should be 12 volts. If these readings are not obtained, replace Hi/LO switch.

Probable Cause: Control module defective.

Correction: De-energize the system and disconnect the harness, P/N 014383, from the ALIPS harness. Using the three clip leads, reconnect the brown, tan and pink wires. Connect the positive (+) probe to the tan wire and the negative (-) probe to the brown wire (Fig. 1.1.12). With the system energized and clutch engaged (pedal up), reading should be 5 volts. if not, replace the control module.

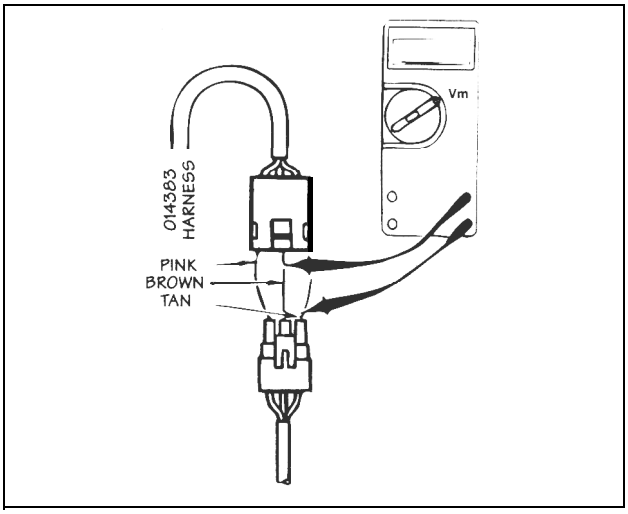

FIG. 1.1.12

Probable Cause: ALIPS sensor inoperative.

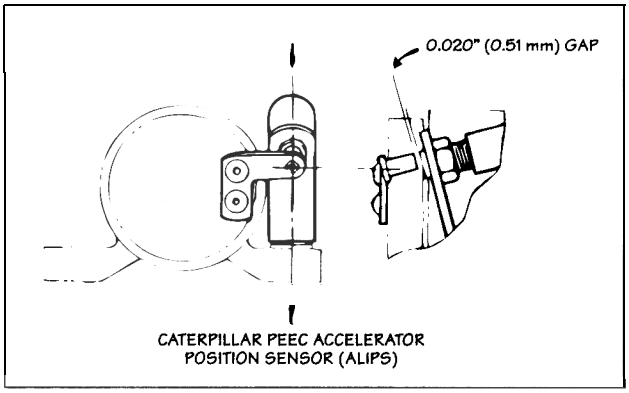

FIG. 1.1.13

Correction: If the previous reading was 5 volts, connect the positive (+) probe to the pink wire and the negative (-) probe to the brown wire. With the accelerator in the low idle position, the VOM should read O volts. If the reading is not O volts, the clearance between the magnet and sensor may be too large or the magnet may not be in line with the sensor. If necessary, realign the magnet and sensor and readjust the clearance to 0.02" (0.51 mm) (Fig. 1.1.13). If the volt meter still does not read O volts, replace the sensor assembly.

With the accelerator depressed, the reading should be 5 volts. If not, replace the ALIPS sensor assembly.

If the ALIPS sensor assembly functions properly, remove the clip leads and reconnect the harness.

Probable Cause: Clutch switch inoperative.

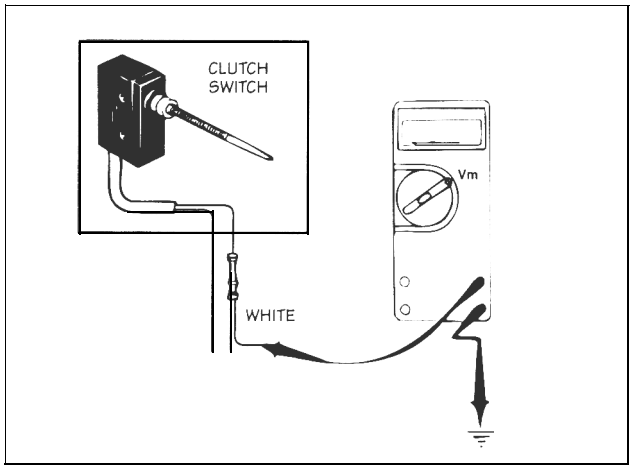

FIG. 1.1.14

Correction: Connect the negative (-) probe to the common ground point and the positive (+) probe to the white lead in the main harness (Fig. 1.1.14). Energize the system. With the clutch engaged (pedal up), VOM should cause a reading of 5 volts. if these readings are not obtained, check adjustment of clutch switch. Switch should actuate in the top travel portion of the pedal. Readjust if necessary.

If these checks are not OK, disconnect the wires at the clutch switch. Check continuity between the switch terminals. There should be O ohms resistance with the switch activated (contacts closed) and infinite resistance with the switch relaxed (contacts open). if these conditions do not exist, replace switch.

Probable Cause: Service brake pressure switch inoperative.

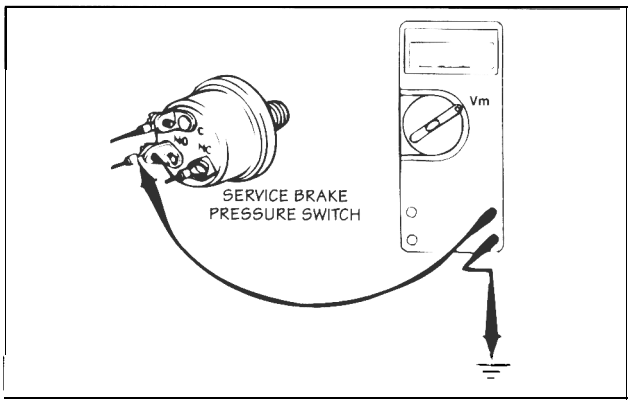

FIG. 1.1.15

Correction: Connect the positive (+) probe of the VOM to the normally open (NO) contact of the brake pressure switch and the negative (-) probe to ground. With the system activated, sufficient air pressure to activate the brake pressure switch, cruise control switch on, and clutch pedal up, the volt meter should read 5 volts (Fig. 1.1.15). with the service brake pedal depressed, the volt meter should read 0 volts. If these readings are not obtained, replace the service brake pressure switch.

Probable Cause: Control module inoperative.

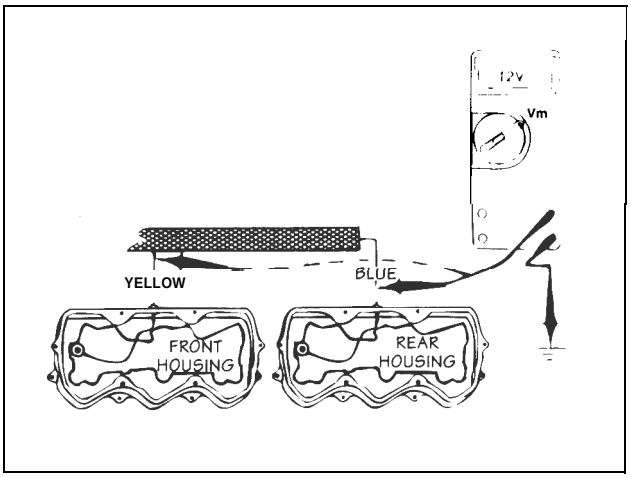

FIG. 1.1.16

Correction: If of the above procedures do not locate the problem, disconnect the wire harness at the engine brake spacers. Set the selector switch in HI, accelerator in low idle, cruise control switch off and clutch switch activated, both blue and yellow wires should read 12 volts (Fig. 1.1.16). Depressing the clutch should cause the voltage at each wire to drop to 0 volts. if these readings do not occur, replace the control module.

Probable Cause: Solenoid Valve

Correction: With the blue and yellow wires disconnected at the engine brake spacers, connect one probe of the VOM to the solenoid terminal and the other probe to ground at the solenoid body (Fig. 1.1.17).

Reading should be 9.75 to 10.75 Ohms for current solenoid valves, P/N 016640. For early style solenoid valves, P/N 004205, the resistance should be 19.8 to 22 Ohms. If not, replace the solenoid valve (see Fig. 1.1.9 on page 1.1.5).

If solenoid resistance is OK, check continuity of solenoid lead wires. No reading from solenoid to connection at spacer indicates an open circuit and wire must be replaced.

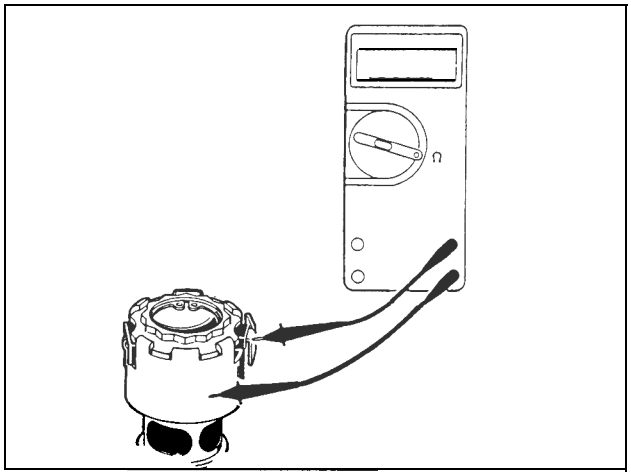

FIG. 1.1.17

Wiring Diagram for DDC Engines

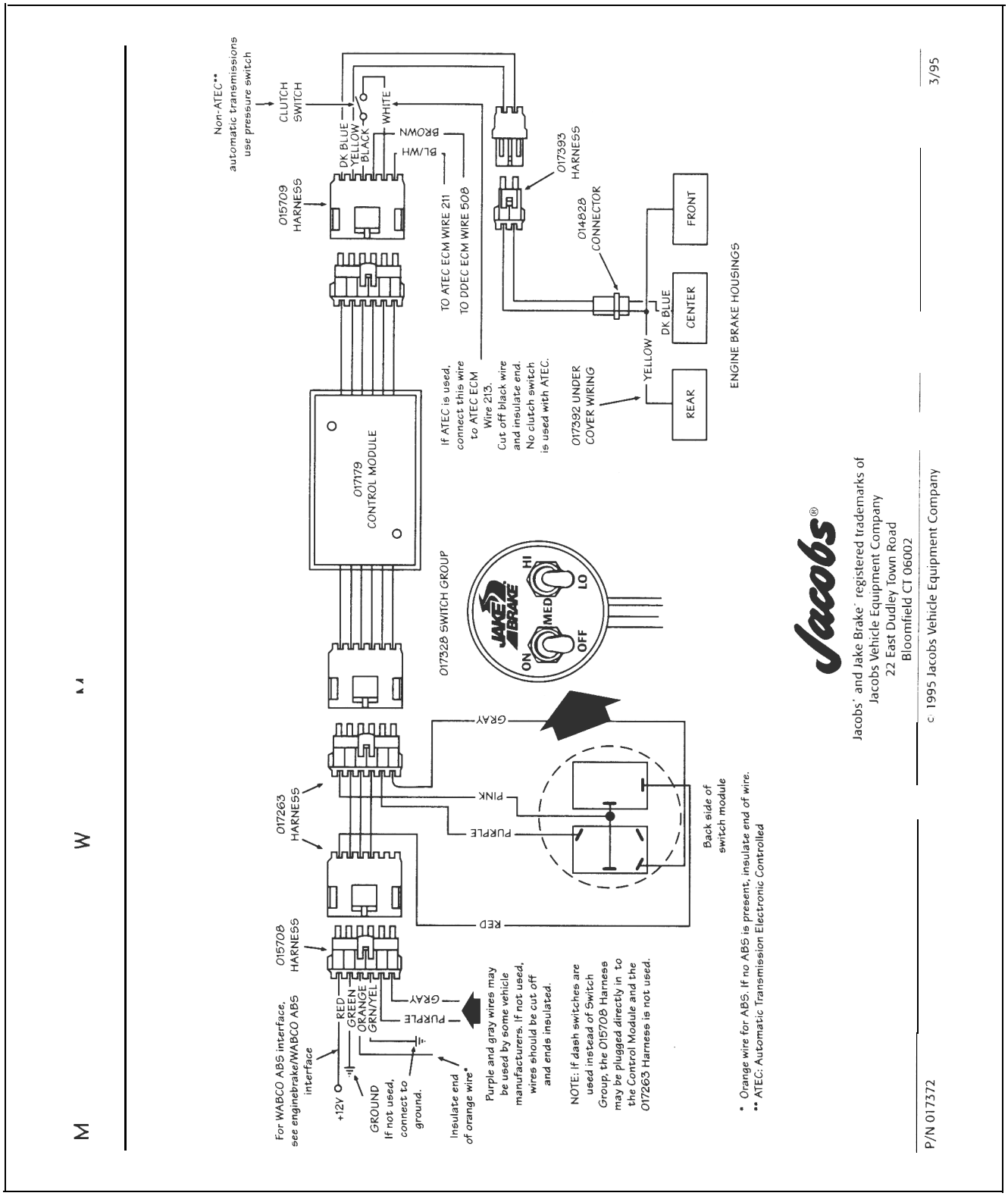

FIG. 1.1.18

Troubleshooting: DDEC II Controls

Models 760/760A/765 and 7l/92A Engine Brakes

The Jacobs Electronic Control Module, P/N 017179, is a sealed electronic device and is not field serviceable. The Control Module can be operated using the standard dash toggle switches or the Jacobs Dash Switch Module, P/N 017328 or 017346. To test if this device requires replacement, follow the step-by-step procedures within the troubleshooting guide.

Equipment Required for Testing:

Voltmeter with 20,000 Ohm/volt input impedance, minimum. Keep the voltmeter on the 20 VDC/div scale for the 12-volt control and 200 VDC/div scale for the 24-volt control for all test measurements.

NOTE:

THIS CONTROL CAN BE USED FOR 12-OR 24-VOLT OPERATIONS. USE + 12/24 VOLTS WHEN REFERRING TO THE (+) BATTERY VOLTAGE. THIS GUIDE WILL MAKE REFERENCE TO A 12-VOLT OPERATION. ACTUAL BATTERY VOLTAGE MAY VARY UP TO 2 VOLTS.

If measuring the voltage at the solenoid valves, make sure that all wiring harnesses are connected. if the voltage at the output of the control is measured without the solenoid valves connected, both the BLUE and YELLOW wires will measure approximately +1 volt. These are internal voltages established by the control module when the output wires are disconnected.

Operation Function

- The in-line switch module (if used) is connected to the power input side of the control. This is the harness with the RED and GREEN wires, P/N 015708.
- The ON/OFF power switch connects the RED wire to the +12 volt vehicle electrical system providing power to the control module.
- The PURPLE and GRAY inputs select which one of the DK BLUE or YELLOW outputs will be active. The (AUX LO) GRN/YEL, (AUX HI) ORANGE, (#508) BROWN, and (CLUTCH SWITCH) BLACK and WHITE inputs control when the DK BLUE and YELLOW will be active. To allow the outputs to be active, the following must be true:

  1. The clutch switch closed connecting the BLACK and WHITE wires together.
  2. The (AUX LO) GRN/YEL wire connected to ground (0 VDC).
  3. The (#508) BROWN wire switches to ground (0 VDC).
  4. The (AUX HI) ORANGE wire connected to ABS. If no ABS, end of wire should be insulated.

Before active troubleshooting is begun, check the integrity of all wiring and harness connections to verify that connections are tight and that wires are not pinched or have scraped insulation.

Wiring Diagram for DDC Engines

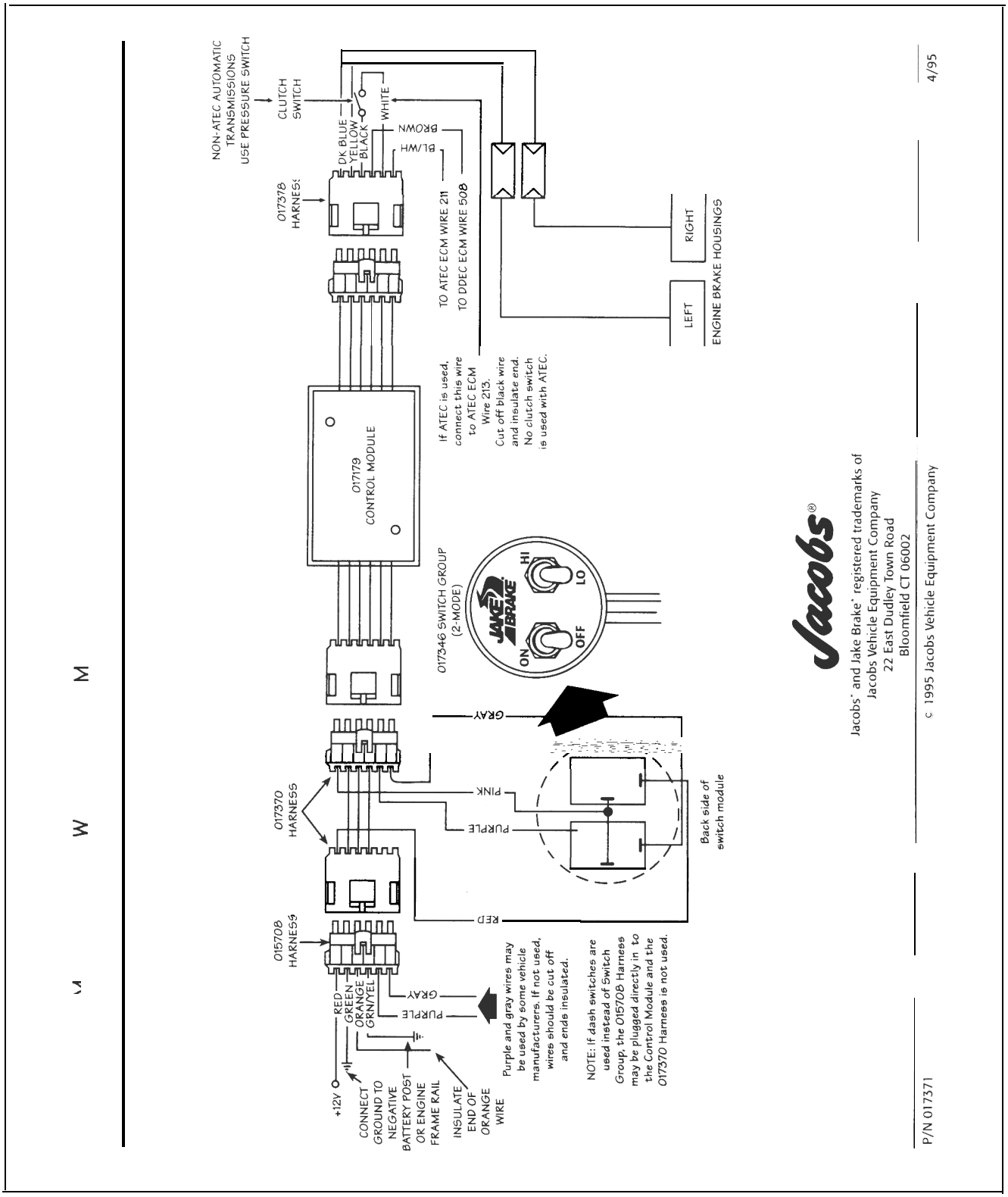

FIG. 1.1.19

Problem: Engine Brake will not activate

Probable Cause: Check supply voltage

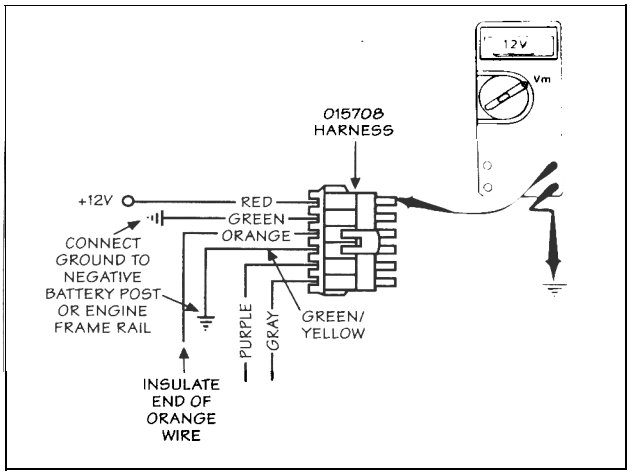

FIG. 1.1.20

Correction: With the ignition switch on, disconnect the P/N 015708 harness from the control module connector. Measure the voltage at the RED wire. Place the positive probe (+) of the voltmeter on the terminal of the RED wire and the negative probe (-) to ground. The voltmeter should read +12 VDC (Fig. 1.1.20). If this condition is not present, check that system is energized and check power supply.

Probable Cause: Check switches and connections

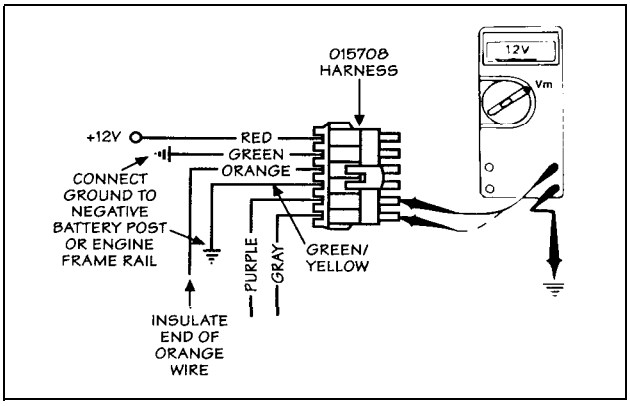

FIG. 1.1.21

Correction:

Optional Selector Switch: Disconnect P/N 015708 harness from control module. Measure voltage at both PURPLE and GRAY wires. With selector switch in HI position, both wires should read +12 VDC (Fig. 1.1.21). If this condition is not present, check power supply, connections and switches. Repair or replace as required.

Jacobs Switch Group: Disconnect P/N 017263 (017370) harness from Jacobs control module. Measure the voltage at the RED wire. The voltmeter should read +12 VDC when the main power supply is ON and O VDC with main power supply OFF (Fig. 1.1.22). If these conditions are not present, check power supply and connections.

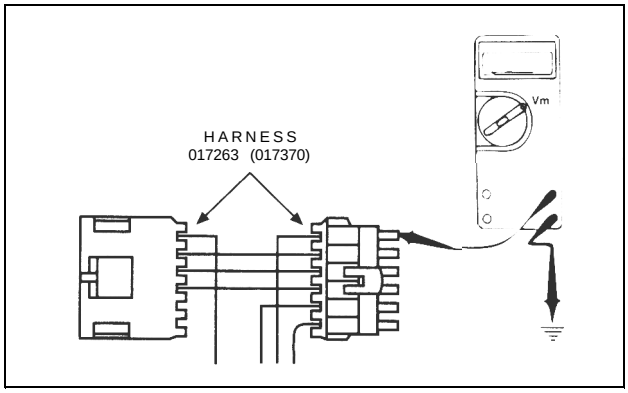

FIG. 1.1.22

(Fig. 1.1.23) With main power supply ON and selector switch in LO, the PURPLE wire should read +12 VDC and GRAY wire O VDC. With selector switch in MED position, GRAY wire should measure+12 VDC; PURPLE wire O VDC. With selector in HI position, both PURPLE and GRAY wires should measure +12 VDC. If these conditions are not present, check connections, check wiring schematic for proper position of wires to switch and/or replace switch.

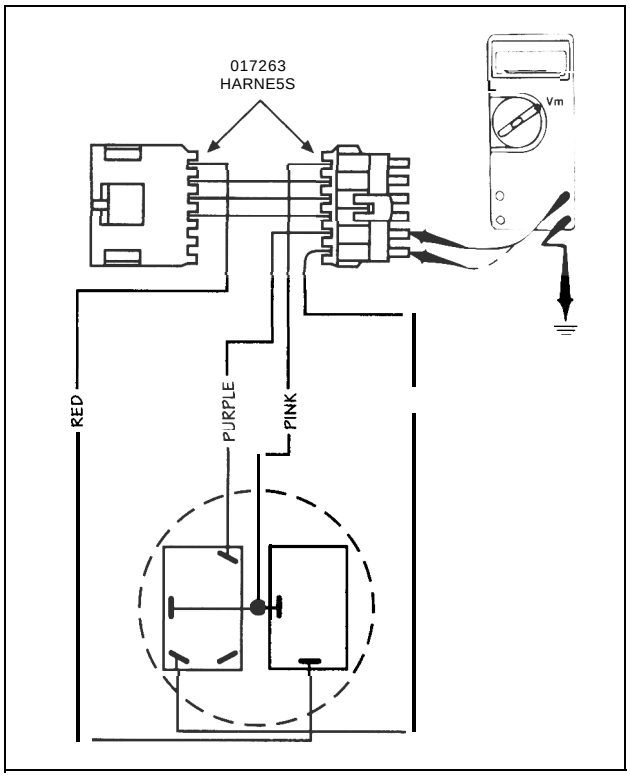

FIG. 1.1.23

Probable Cause: Check clutch switch.

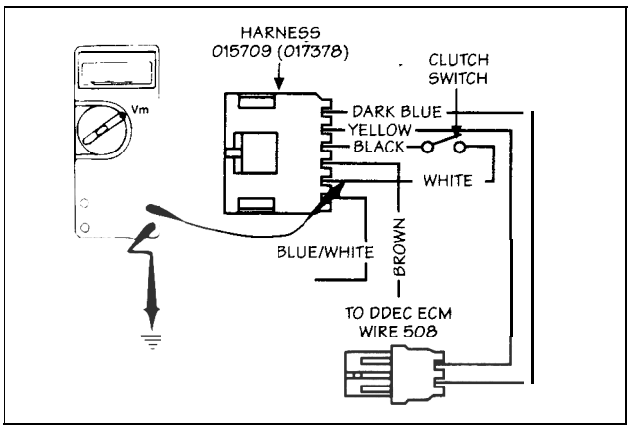

FIG. 1.1.24

Correction: With the P/N 015709 (017378) harness connected to the control module, measure the voltage at the terminal of the WHITE wire. With the clutch engaged (pedal not depressed), a reading of O VDC should be measured. With the clutch disengaged (pedal depressed) a reading of +5 VDC +/- 0.5 VDC should be measured (Fig. 1.1.24). If this condition does not exist, check continuity of clutch switch and BLACK and WHITE wires.

Probable Cause: Check engine brake enable signal.

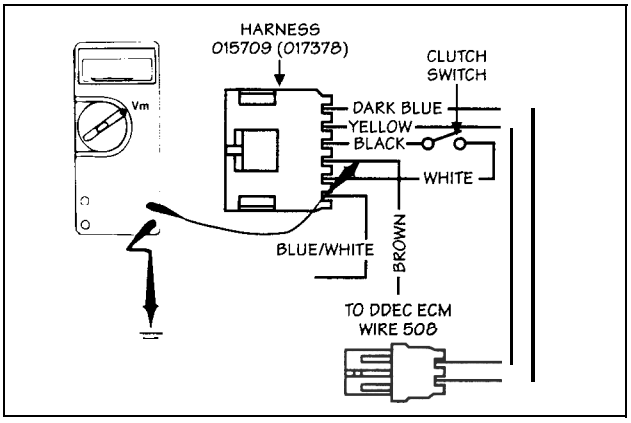

FIG. 1.1.25

Correction: Disconnect 015709 (017378) harness from 017179 module. Start the engine. Turn the engine brake switch OFF. Place the positive probe of the voltmeter at the terminal of the BROWN wire and the negative probe on ground (Fig. 1.1.25). Increase engine RPM to rated engine speed. The voltmeter should measure +12 VDC. Release throttle; voltage should drop to O VDC. When the engine reaches idle, the voltage should again read +12 VDC. If the voltage does not change, check connections and wiring. if problem continues, have the engine ECM checked.

Probable Cause: Check output.

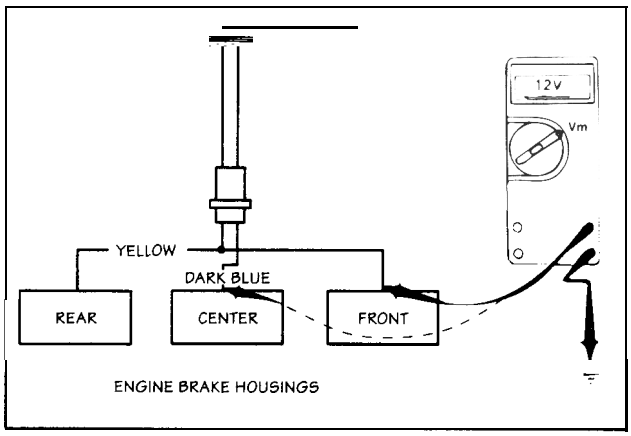

FIG. 1.1.26

Correction: Inspect DK BLUE and YELLOW wires leading to solenoid valve connectors. Check for loose contacts, pinched wires or scraped insulation. Start the engine, turn the engine brake switch ON and select HI. Advance the throttle to rated speed and then release the throttle. Voltage at both YELLOW and DK BLUE wires should measure +12 VDC (Fig. 1.1.26).

NOTE:

WHEN MEASURING VOLTAGE, CHECK THAT ALL HARNESS CONNECTIONS ARE TIGHT. IF THE VOLTAGE IS MEASURED WITH THE HARNESS FROM THE SOLENOID LOOSE OR DISCONNECTED, BOTH THE DK BLUE AND YELLOW WIRES WILL MEASURE APPROXIMATELY +1 VDC. THIS IS AN INTERNAL VOLTAGE ESTABLISHED BY THE CONTROL MODULE FOR REFERENCE.

Probable Cause: Check Jacobs control module.

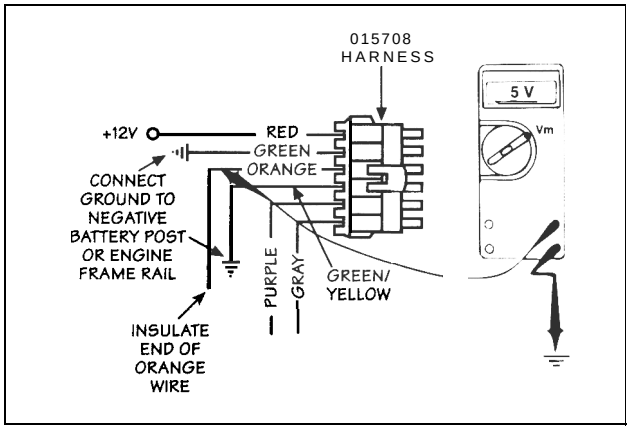

FIG. 1.1.27

Correction: Measure the voltage at the ORANGE wire of the control module. With system power ON, the voltage should measure +5 VDC +/- 0.5 VDC (Fig. 1.1.27). If this condition is not present, replace module.

Problem: Engine Brake performance erratic/intermittent

Probable Cause: Check ground connection.

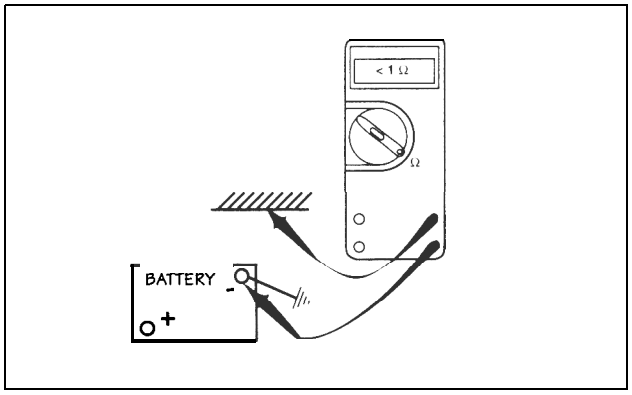

FIG. 1.1.28

Correction: The resistance between the engine block and the negative terminal of the battery must be less than 1 ohm (Fig. 1.1.28). The resistance between the GREEN wire of the engine brake control module and the negative terminal of the battery must be less than 5 ohms for-proper module operation (Fig. 1.1.29).

If vehicle is NOT equipped with ABS system:

The GREEN/YELLOW wire must be grounded, preferably to the same point as the GREEN wire. These wires should be isolated from other system ground wires. The ORANGE wire must not be grounded and must be insulated when not in use (no ABS).

Vehicles equipped with ABS system:

Refer to specific ABS or vehicle manufacturer's electrical wiring diagrams or consult a Jacobs distributor for more information

Probable Cause: Check undercover wiring.

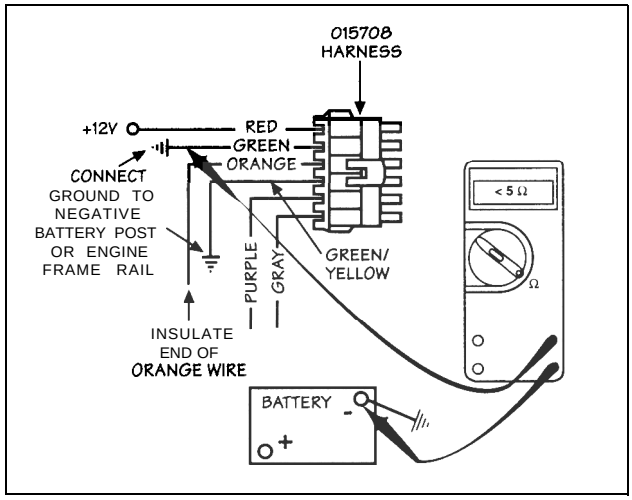

FIG. 1.1.29

Correction: Make sure solenoid wires are securely attached to the solenoid valves.

Probable Cause: Check for solenoid failure.

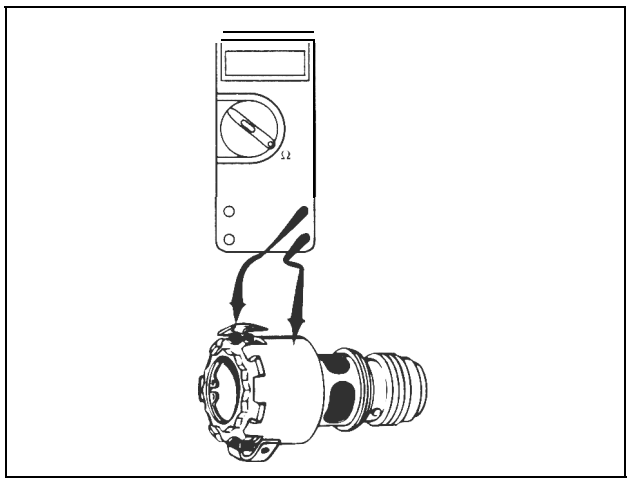

FIG. 1.1.30

Correction: Measure resistance of each solenoid valve (Fig. 1.1.30). Solenoid valves not within correct values must be replaced.

NOTE:

RESISTANCE MAY INCREASE SIGNIFICANTLY WHEN SOLENOID VALVES ARE AB0VE 100° F. SEE FIG. 1.1.9, PAGE 1.1.5, FOR ELECTRICAL REQUIREMENTS.

Probable Cause: Check Allison ATEC automatic transmissions.

Correction: Check that the BLUE/WHITE wire from the control module is connected to the ATEC ECM wire #211. The WHITE wire from the control module is connected to ATEC ECM wire #213. The BLACK wire from the control module must be insulated.

Low Engine Speed Retarder Cutoff

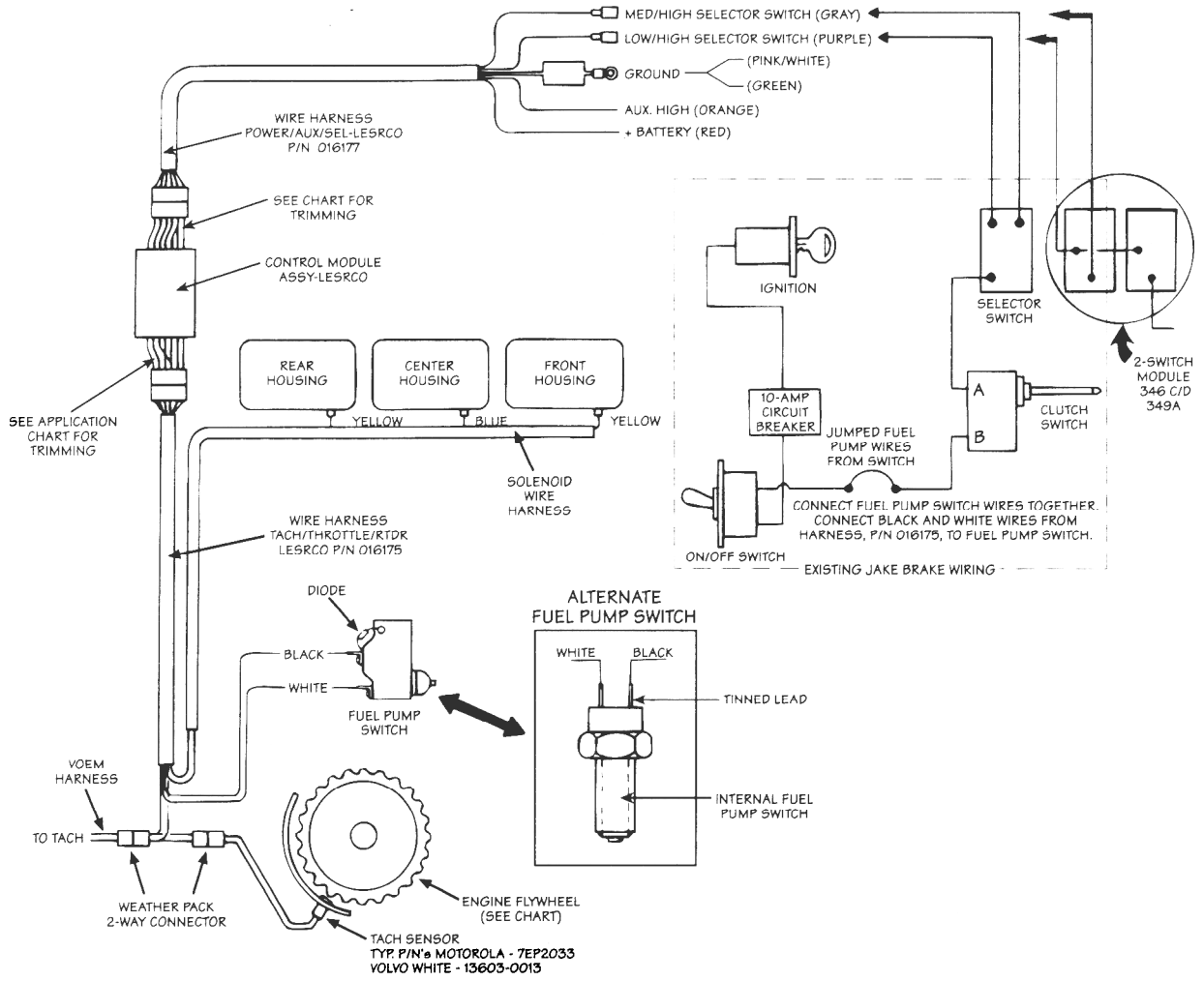

Application Chart

Engine Make and Model	Flywheel Teeth	Cut-off Speed (RPM)	Trim Required
Mack, Cummins NT	118	850	Cut both green/yellow and blue/white
Cummins 10 Liter	105	950	Cut both green/yellow and blue/white
CAT 3406	113	880	Cut both green/yellow and blue/white
CAT 3406	113	1060	Cut green/yellow only
CAT 3306	132	910	Cut green/yellow only
CAT 3306	156	960	Cut blue/white only

Refering to the chart above, select the engine make and model and the desired cut-off speed (RPM) and cut the Control Module wires accordingly. Install caps on the ends of wires for insulation.

FIG. 1.1.31

Troubleshooting: Low Engine Speed Retarder Cut-off

Problem: Engine Brake will not operate.

Probable Cause: Power supply wire (red) disconnected, not energized.

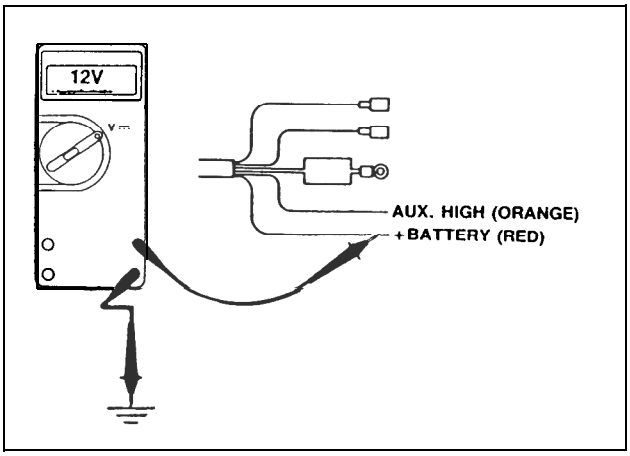

FIG. 1.1.32

Correction: Check that the connector between the vehicle power supply and the red line to the Jacobs control module is tight and free of any corrosion or oil. With the vehicle ignition turned on, +12 VDC must be measured at the red fire (Fig. 1.1.32). if not, continue with checks.

Probable Cause: Blown fuse or circuit breaker.

Correction: Replace fuse (10 amp) or reset circuit breaker. Search for cause of blown condition.

Probable Cause: Disconnected or bad fuel pump switch.

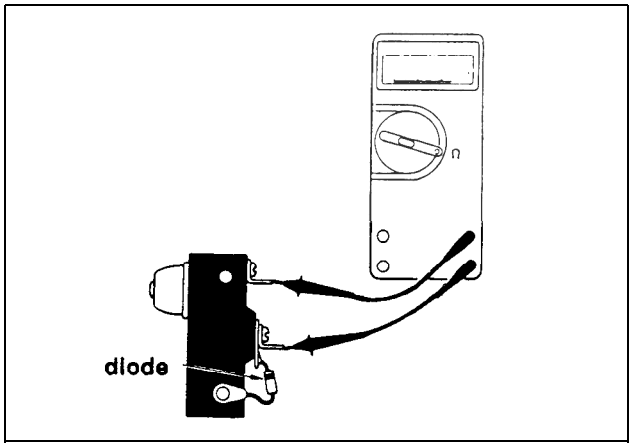

FIG. 1.1.33

Correction: Check that connections are made and are tight. Check for corrosion on terminals and clean as required. Check function of fuel pump switch. With the switch open, the VOM should register an “0. L.” condition (Fig. 1.1.33). With the switch closed (plunger released), the VOM should register continuity. Replace or adjust as needed.

Probable Cause: Disconnected or failed clutch switch.

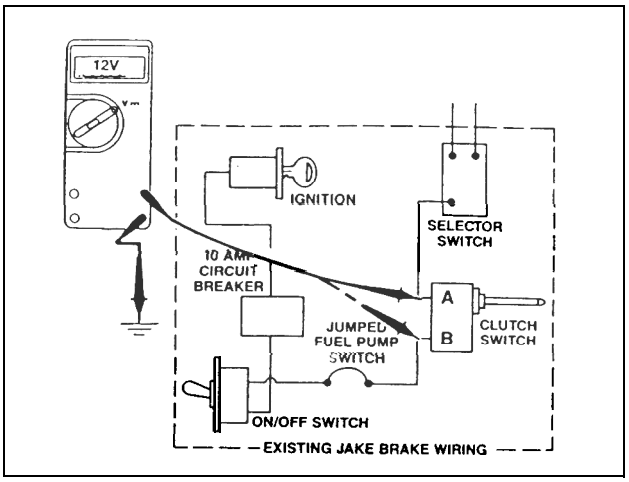

FIG. 1.1.34

Correction: Check that connections are tight on the clutch switch terminals. Check that there is no corrosion on connectors. Clean or replace as required. Check the clutch switch. With ignition ON and the Jacobs ON/OFF switch ON, measure the voltage at “A” (Fig. 1.1.34). VOM should read +12.5 VDC. At position “B” with switch closed, VOM should measure +12.5 VDC; with switch open, O VDC at position “B”.

Probable Cause: Disconnected or failed selector switch.

Correction: Selector switch LO: 12.5 +/- 1 VDC must be applied to the purple wire to activate the blue solenoid output wire.

Selector switch MED/HI: 12.5 +/- 1 VDC must be applied to the gray wire to activate the yellow solenoid output wire.

Probable Cause: Orange wire grounded.

Correction: ABS (Aux) connection High: Orange wire for normal operation is not used. If connected to VOM, reading should be +5 VDC. If connected to ground, engine brake will not operate.

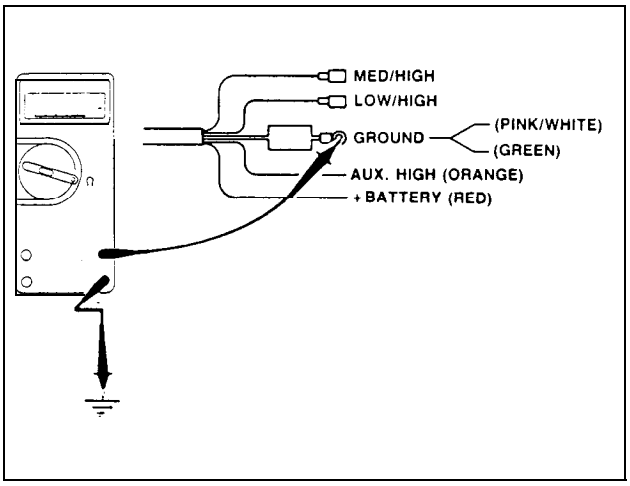

FIG. 1.1.35

Probable Cause: Pink/white wire not grounded.

Correction: ABS connection LOW: pink/white wire is, for most applications, connected to ground with the green wire. If not connected to ground, brakes will not operate. VOM reading when not connected should be +5 VDC (Fig. 1.1.35).

Probable Cause: Green wire not grounded or inadequately grounded.

Correction: Ground reference must be 1 ohm or less measure with VOM.

Probable Cause: Trim wires not properly cut

Correction: Check application chart (Fig. 1.1.31) for proper wires to be cut.

Probable Cause: Failed or disconnected tach sender.

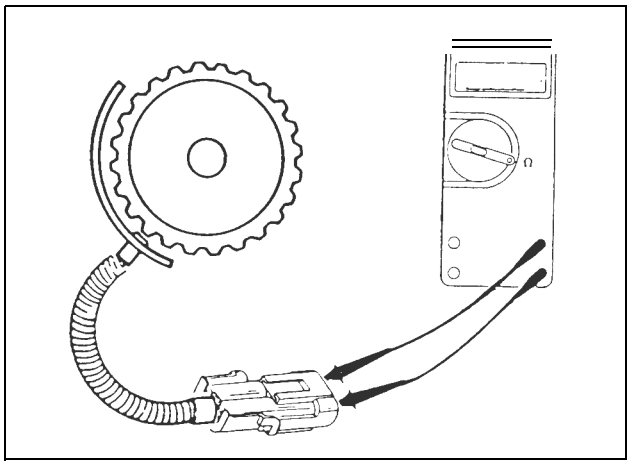

FIG. 1.1.36

Correction: Check that connections are tight with no evidence of corrosion. Disconnect harness at the control module. Measure resistance between tach sender wires; 50-300 ohms is a good reading (Fig. 1.1.36). The Motorola 7EP2033 or Volvo/white 13603-0013 will read 245-255 ohms.

Readings outside the accepted range indicate a short circuit or broken wire.

The sensor must be properly adjusted to manufacturers' specifications to generate the proper signal.

Probable Cause: Bad control module.

Correction: If all the above steps check OK, replace control module.

Problem: Brake modulation does not work properly.

Probable Cause: Gray and purple input wires not connected or improperly connected to switch.

Correction: Check for tight connections and no corrosion.

- Gray wire to MED/HIGH selector position.
- Purple to LO selector position.

Probable Cause: Selector switch failure.

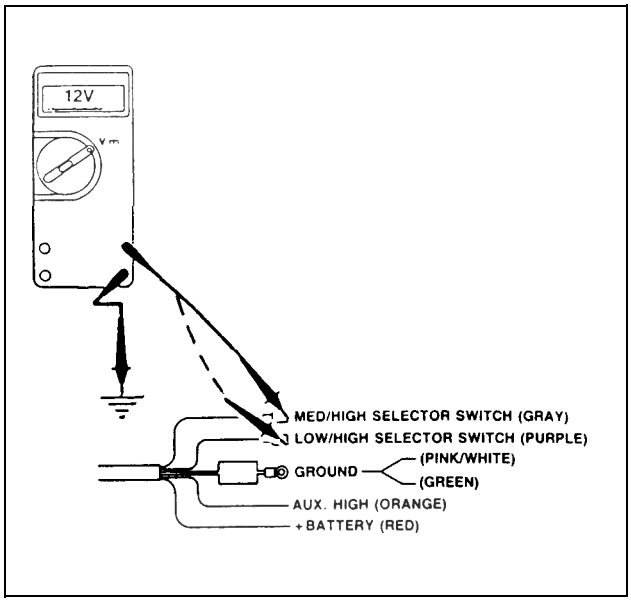

FIG. 1.1.37

Correction: With the selector switch in LO position, ignition ON and ON/OFF switch ON, measure voltage output at purple wire (Fig. 1.1.37). Proper reading should be 12.5 +/- 1 VDC. Measure output at gray wire. Output should be 0 VDC. Select HI position on selector. VOM should read 12.5 +/- 1 VDC at each output terminal.

Probable Cause: Blue and yellow output wires disconnected or reversed.

Correction: Check to be sure connectors are tight and there are no signs of corrosion. Check that the blue wire is attached to the center housing (3-housing installation) or the rear housing (2-housing installation). Insure the yellow harness is attached to the front or first and third housings.

With the engine operating, transmission in neutral, dash switch on, selector switch on HI, accelerate engine to high idle and then release throttle. The VOM readings at the blue and yellow wires should be 12 VDC (Fig. 1.1.38).

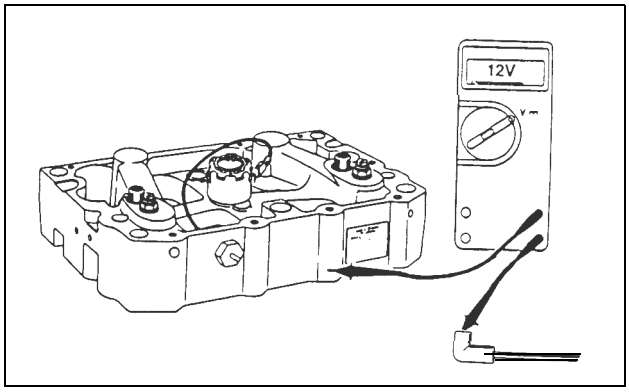

FIG. 1.1.38

Check that 12 VDC is present at housing connector(s). If engine brake does not operate, remove valve cover(s).

Probable Cause: Solenoid valve does not function.

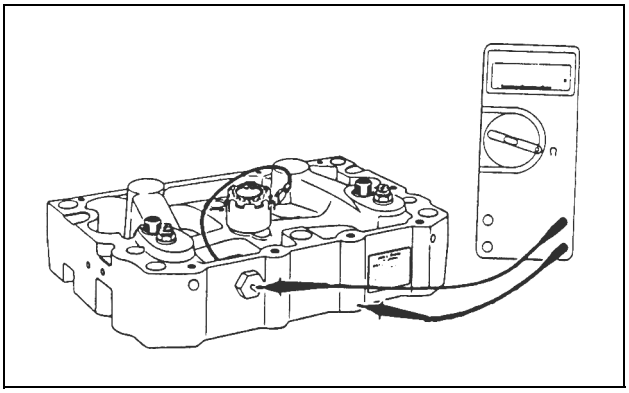

FIG. 1.1.39

Correction: Check to be sure solenoid harness is properly connected.

With electrical power OFF, check resistance of solenoid coil. VOM should read 9.75-10.75 ohms (Fig. 1.1.39). If it does not, replace solenoid valve.

Problem: Engine Brake operation erratic.

Probable Cause: improper ground.

Correction: Using the VOM, measure the resistance from the point the green wire if grounded to the engine block. Resistance must be no greater than 1 ohm. If resistance is greater than 1 ohm, the ground wire must be repositioned to the engine block.

The green ground and the pink/white wire must be grounded alone. Grounding with other components at a common point may lead to “phantom” signals causing erratic operation.

Probable Cause: Improper or insufficient tach signaL

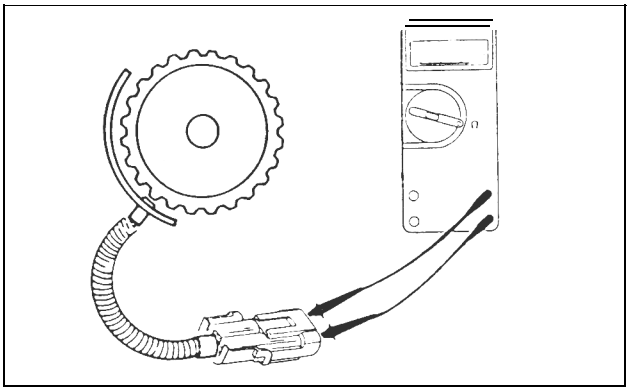

FIG. 1.1.40

Correction: Disconnect Weather pack connector from Jacobs control module. Measure the resistance between the two wires from the tach sender (FiG. 1.1.41). An acceptable reading will be from 50 to 300 ohms. The Motorola 7EP2033 or Volvo/White 13603-0013 will read between 245-255 ohms. Readings outside this range indicate a short circuit or broken wires.

Probable Cause: Check that the tach sender is properly adjusted.

Correction: With engine running, measure AC voltage signal between 500-800 RPM and record reading (Fig. 1.1.41). Above 1000 RPM, the VAC should be greater. If it is not, replace the sending unit.

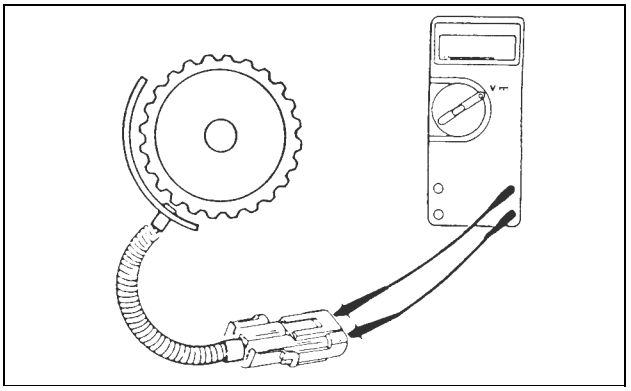

FIG. 1.1.41

Probable Cause: Insufficient tach ground

Correction: Measure the resistance of each tach sender wire to ground (Fig. 1.1.42). The one wire with a reading of O ohms is at ground potential. This wire should be cut and the two ends insulated. If the problem continues, add a separate sending unit for the low speed signal.

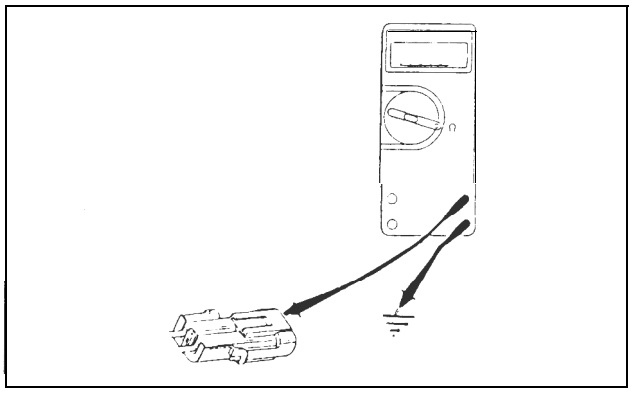

FIG. 1.1.42

Basic Wiring Diagrams

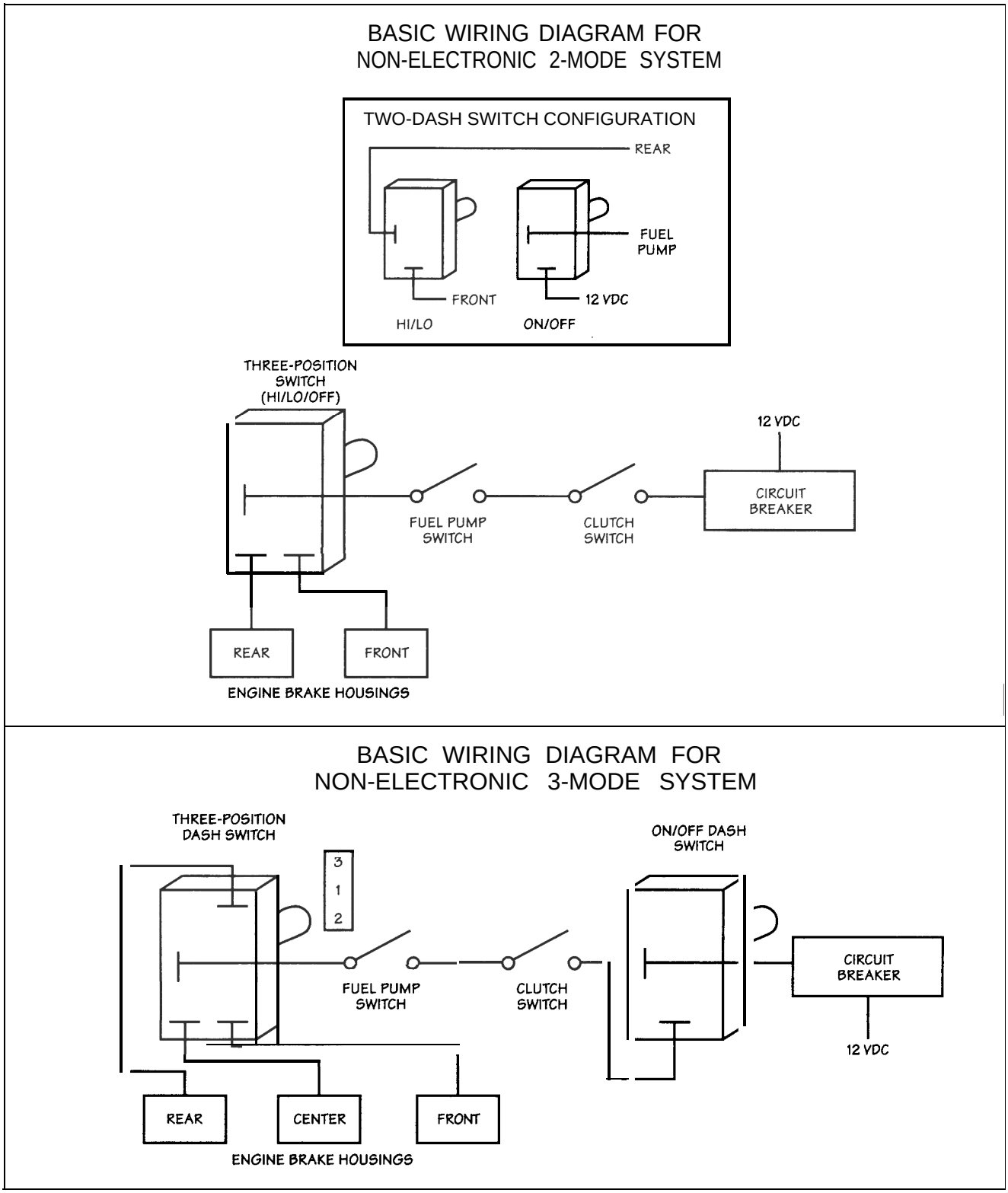

FIG. 1.1.43

Caterpillar Cab Controls

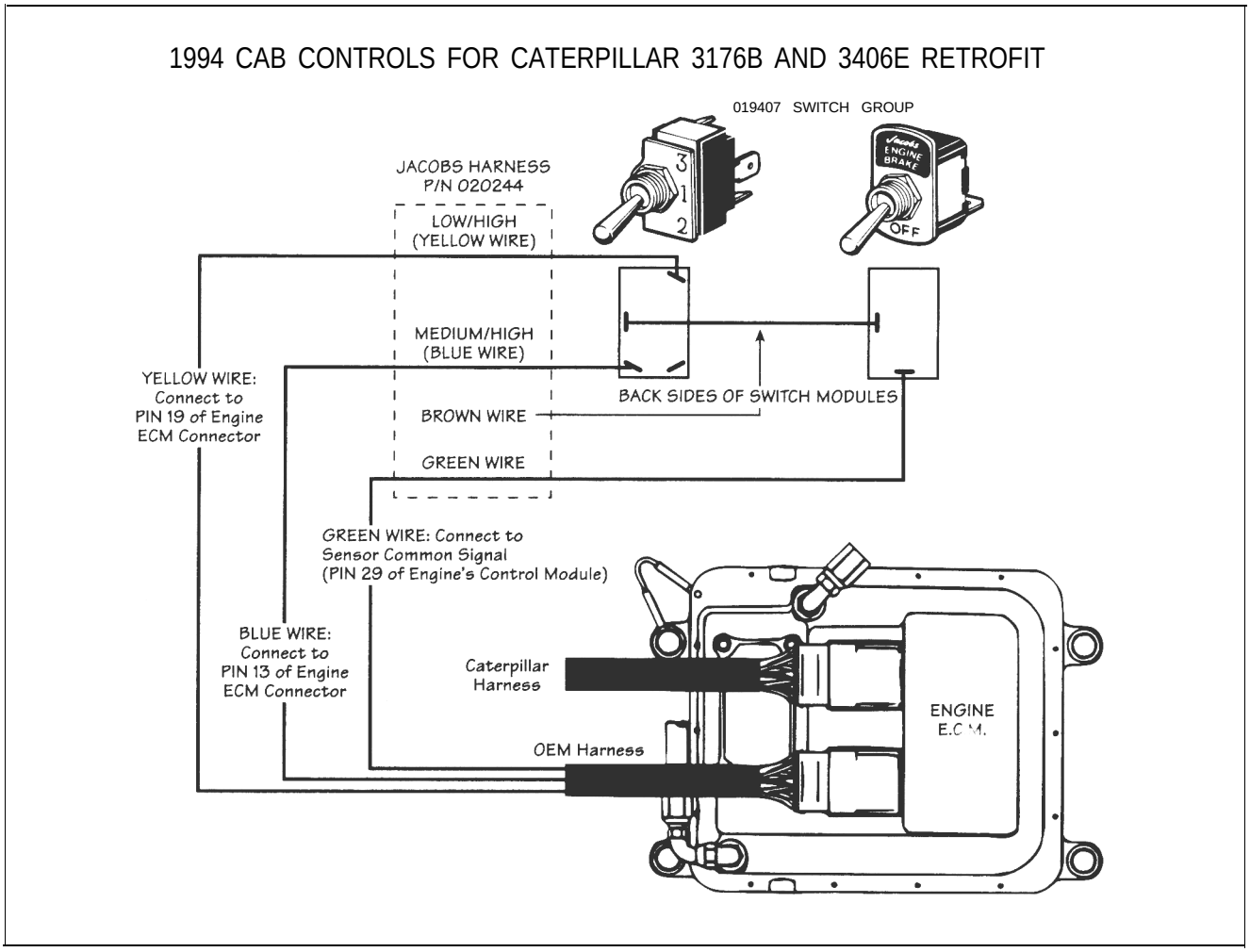

FIG. 1.1.44

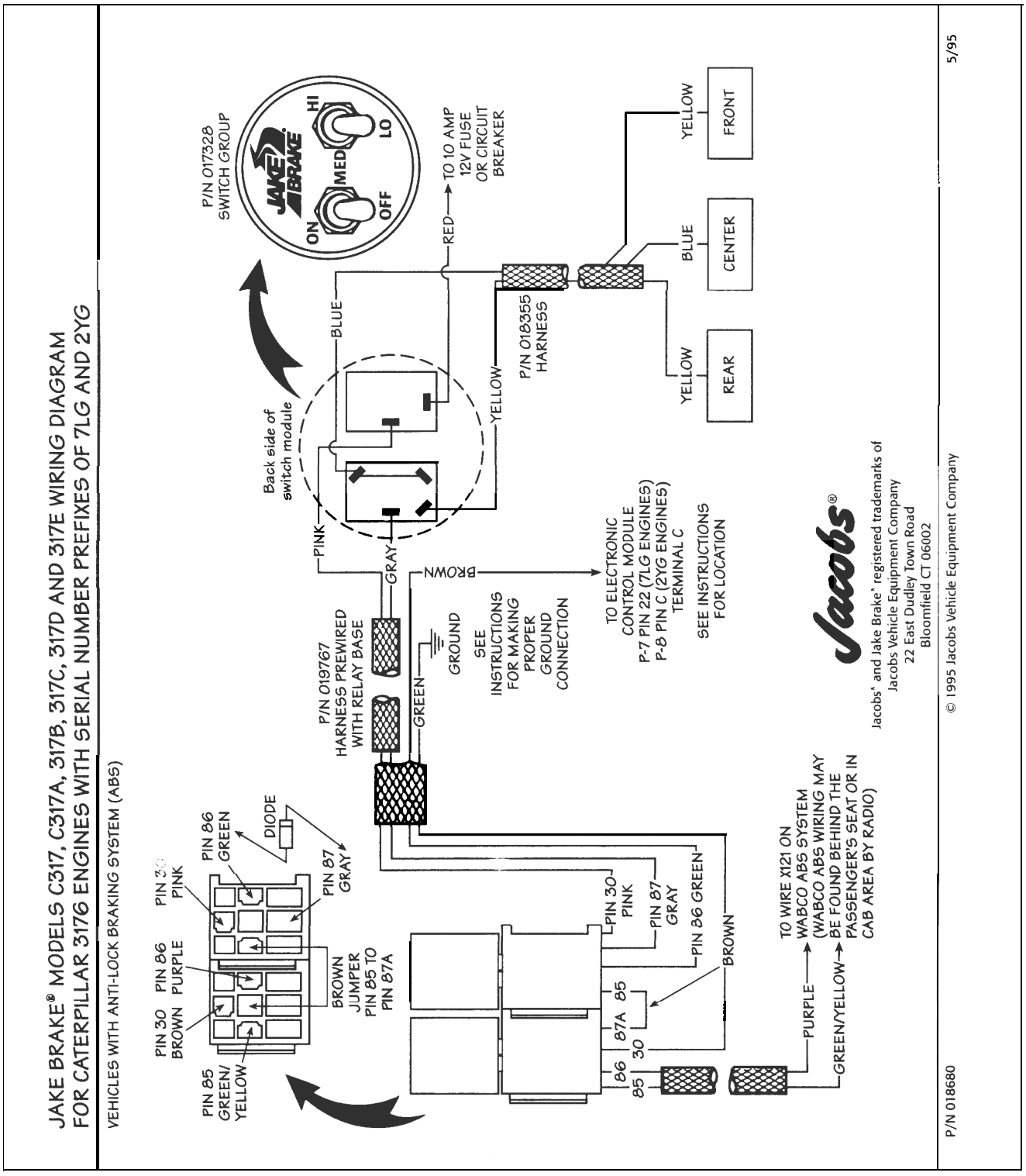
JAKE BRAKE® MODELS C317, C317A, 317B, 317C, 317D AND 317E WIRING DIAGRAM
FOR CATERPILLAR 3176 ENGINES WITH SERIAL NUMBER PREFIXES OF 7LG AND 2YG
VEHICLES WITH ANTI-LOCK BRAKING SYSTEM (ABS)
P/N 017328 SWITCH GROUP
HI
LO
MED
OFF
ON
JAKE BRAKE
TO 10 AMP 12V FUSE OR CIRCUIT BREAKER
RED
BLUE
YELLOW
P/N 018355 HARNESS
FRONT
CENTER
REAR
Back side of switch module
PINK
GRAY
BROWN
GREEN
P/N 019767 HARNESS PREWIRED WITH RELAY BASE
GROUND
SEE INSTRUCTIONS FOR MAKING PROPER GROUND CONNECTION
TO ELECTRONIC CONTROL MODULE P-7 PIN 22 (7LG ENGINES) P-8 PIN C (2YG ENGINES) TERMINAL C
SEE INSTRUCTIONS FOR LOCATION
DIODE
PIN 86 GREEN
PIN 87 GRAY
PIN 30 PINK
PIN 86 PURPLE
PIN 30 BROWN
PIN 85 GREEN/ YELLOW
BROWN JUMPER PIN 85 TO PIN 87A
PIN 30 PINK
PIN 87 GRAY
PIN 86 GREEN
BROWN
86 87A 85
85 30
TO WIRE X121 ON WABCO ABS SYSTEM (WABCO ABS WIRING MAY BE FOUND BEHIND THE PASSENGER'S SEAT OR IN CAB AREA BY RADIO)
PURPLE
GREEN/YELLOW
Jacobs®
Jacobs' and Jake Brake® registered trademarks of Jacobs Vehicle Equipment Company
22 East Dudley Town Road
Bloomfield CT 06002
© 1995 Jacobs Vehicle Equipment Company
P/N 018680
5/95

FIG. 1.1.45

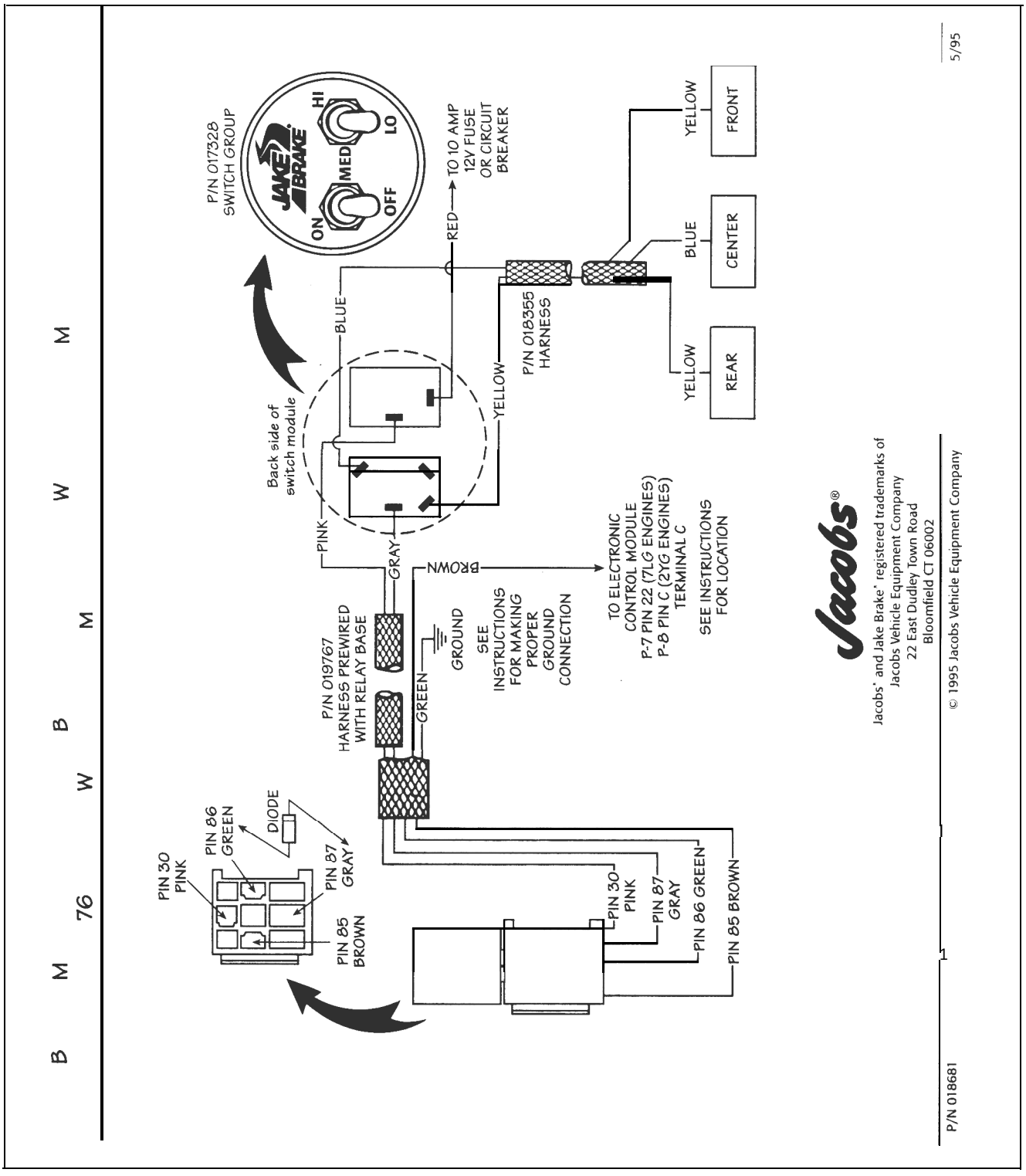
B M 76 W B M W M
P/N 017328
SWITCH GROUP
JAKE BRAKE
ON
OFF
MED
HI
LO
TO 10 AMP
12V FUSE
OR CIRCUIT
BREAKER
RED
BLUE
YELLOW
P/N 018355
HARNESS
FRONT
CENTER
REAR
Back side of
switch module
PINK
GRAY
BROWN
GREEN
P/N 019767
HARNESS PREWIRED
WITH RELAY BASE
GROUND
SEE
INSTRUCTIONS
FOR MAKING
PROPER
GROUND
CONNECTION
TO ELECTRONIC
CONTROL MODULE
P-7 PIN 22 (7LG ENGINES)
P-8 PIN C (2YG ENGINES)
TERMINAL C
SEE INSTRUCTIONS
FOR LOCATION
DIODE
PIN 30
PINK
PIN 86
GREEN
PIN 87
GRAY
PIN 85
BROWN
PIN 86 GREEN
PIN 85 BROWN
Jacobs®
Jacobs' and Jake Brake' registered trademarks of
Jacobs Vehicle Equipment Company
22 East Dudley Town Road
Bloomfield CT 06002
© 1995 Jacobs Vehicle Equipment Company
5/95
P/N 018681
1

FIG. 1.1.46

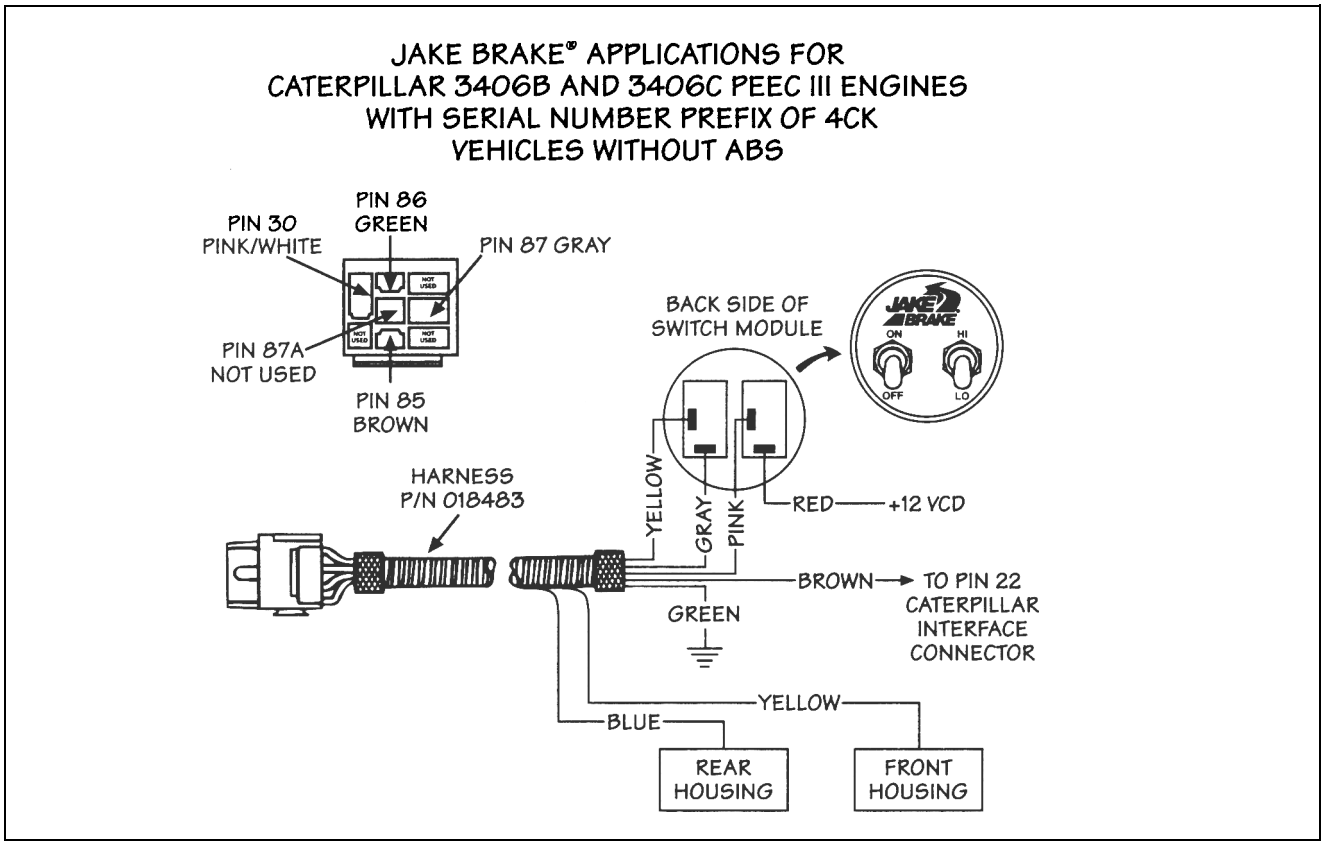
JAKE BRAKE® APPLICATIONS FOR
CATERPILLAR 3406B AND 3406C PEEC III ENGINES
WITH SERIAL NUMBER PREFIX OF 4CK
VEHICLES WITHOUT ABS
PIN 30
PINK/WHITE
PIN 86
GREEN
PIN 87 GRAY
PIN 87A
NOT USED
PIN 85
BROWN
BACK SIDE OF
SWITCH MODULE
JAKE BRAKE
ON
HI
OFF
LO
HARNESS
P/N 018483
YELLOW
GRAY
PINK
RED
+12 VCD
BROWN
TO PIN 22
CATERPILLAR
INTERFACE
CONNECTOR
GREEN
YELLOW
BLUE
REAR
HOUSING
FRONT
HOUSING

FIG. 1.1.47

Wiring Diagrams for Cummins CELECT

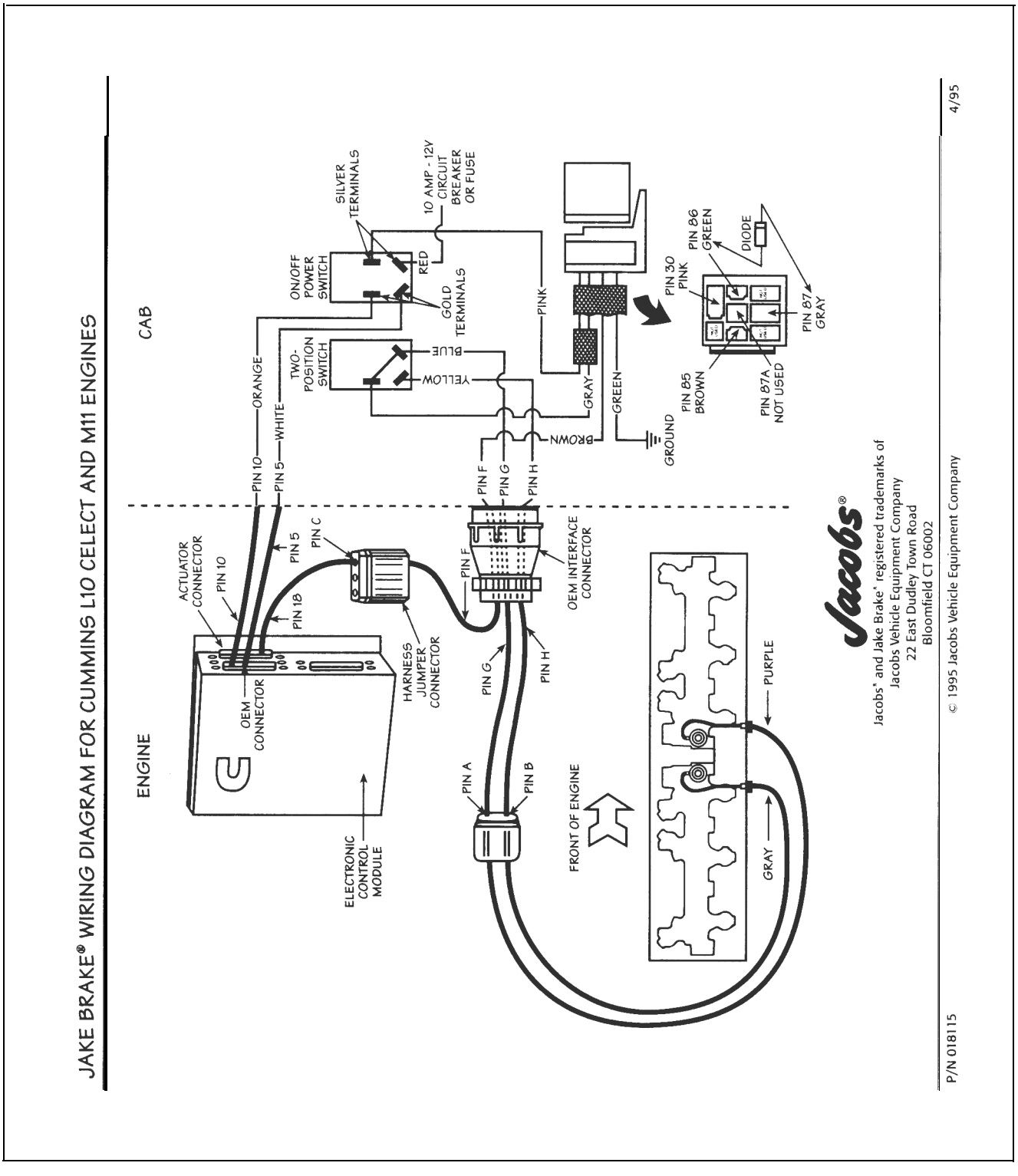

FIG. 1.1.48

Wiring Diagrams for Cummins CELECT

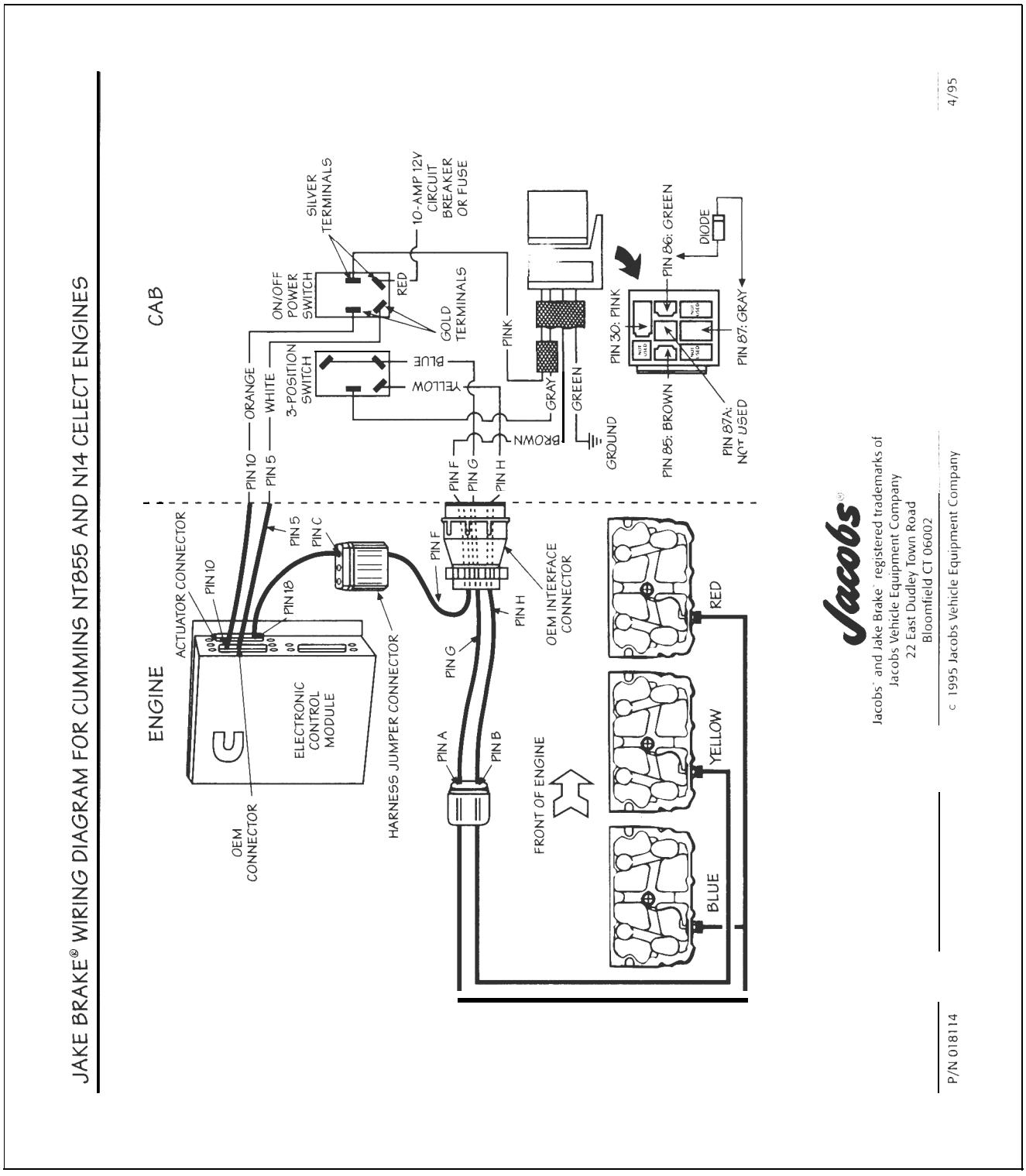

FIG. 1.1.49

Wiring Diagrams for DDC Engines

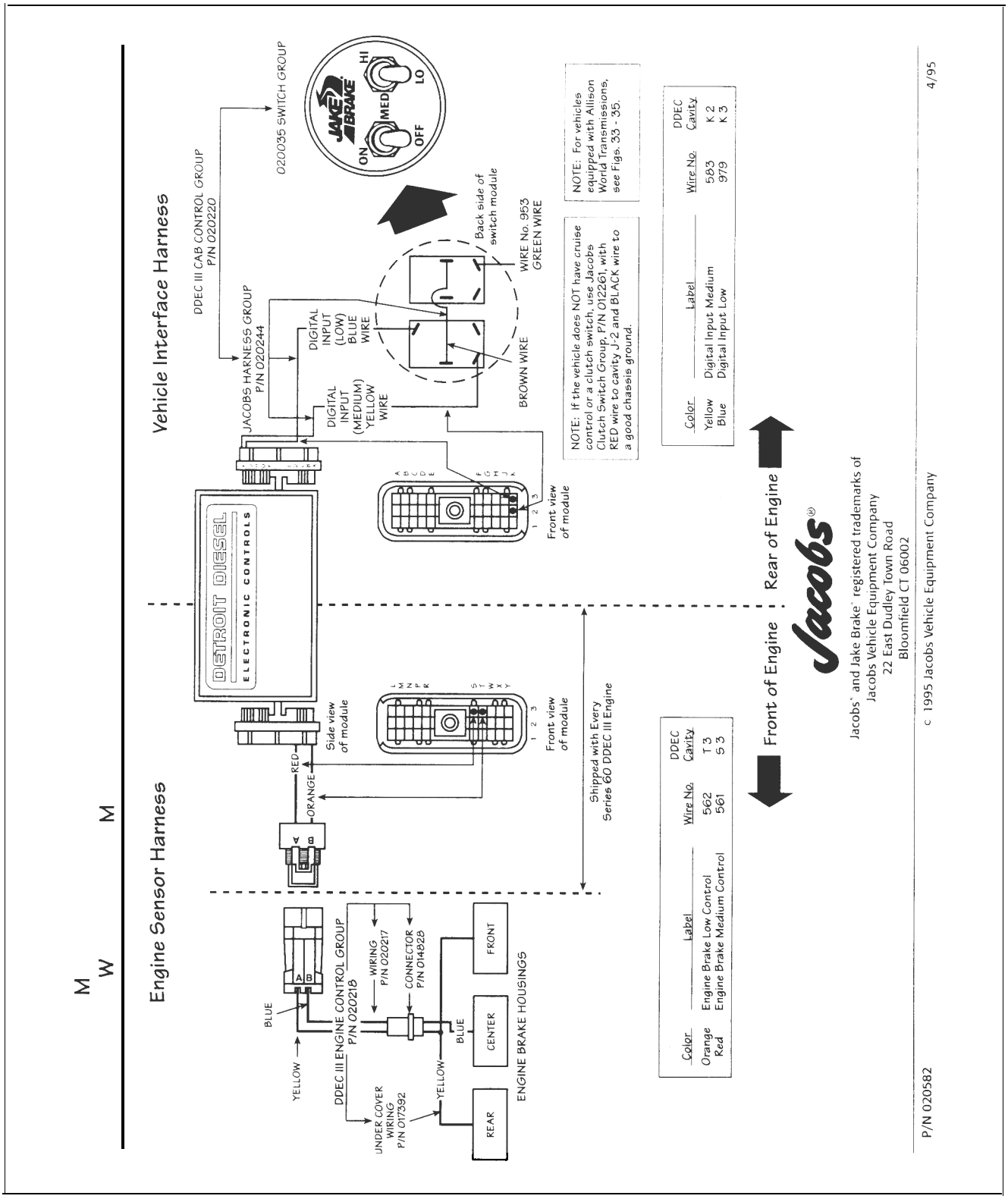

FIG. 1.1.50

Wiring Diagrams for DDC Engines

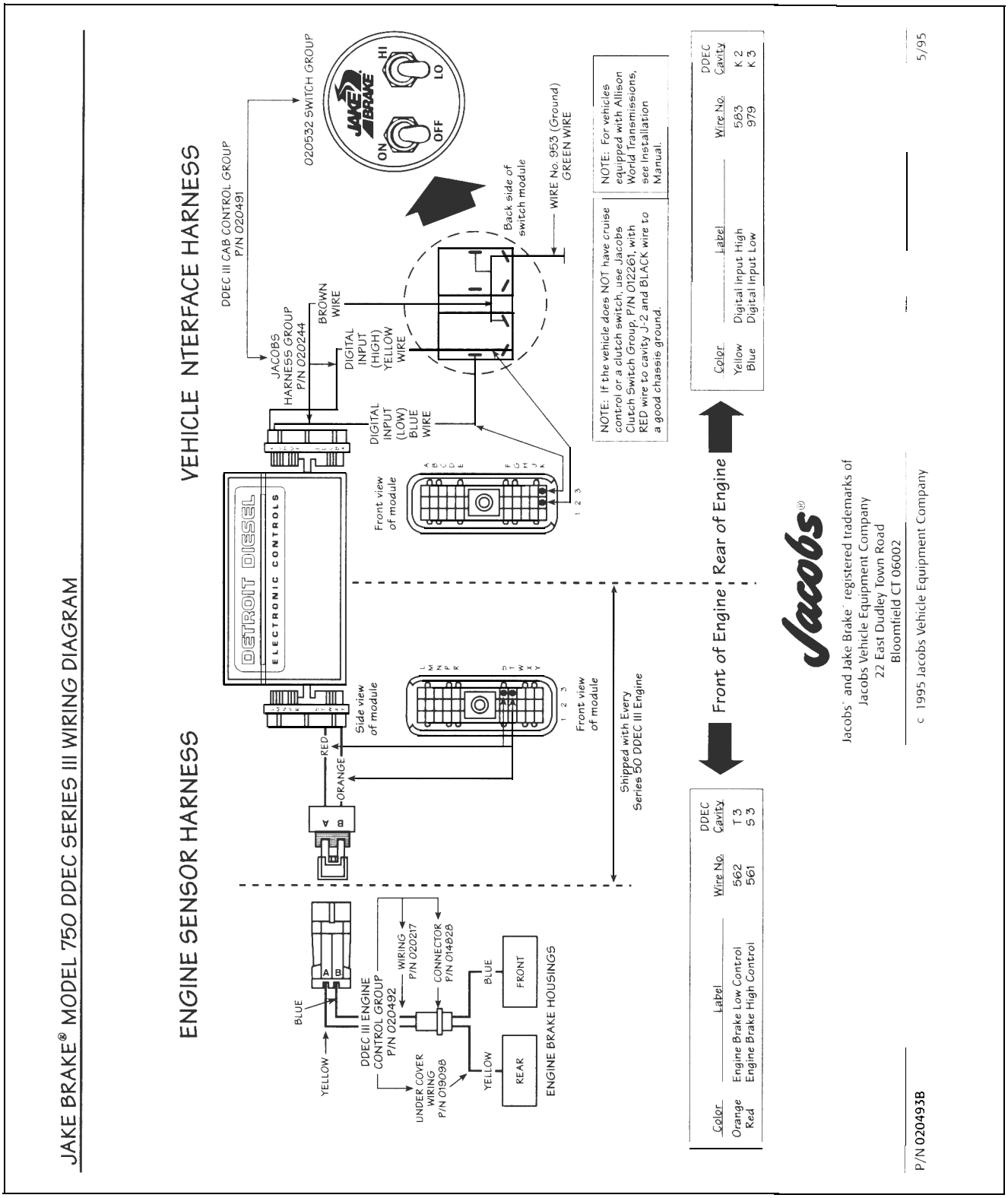

FIG. 1.1.51

Wiring Diagrams for DDC Engines

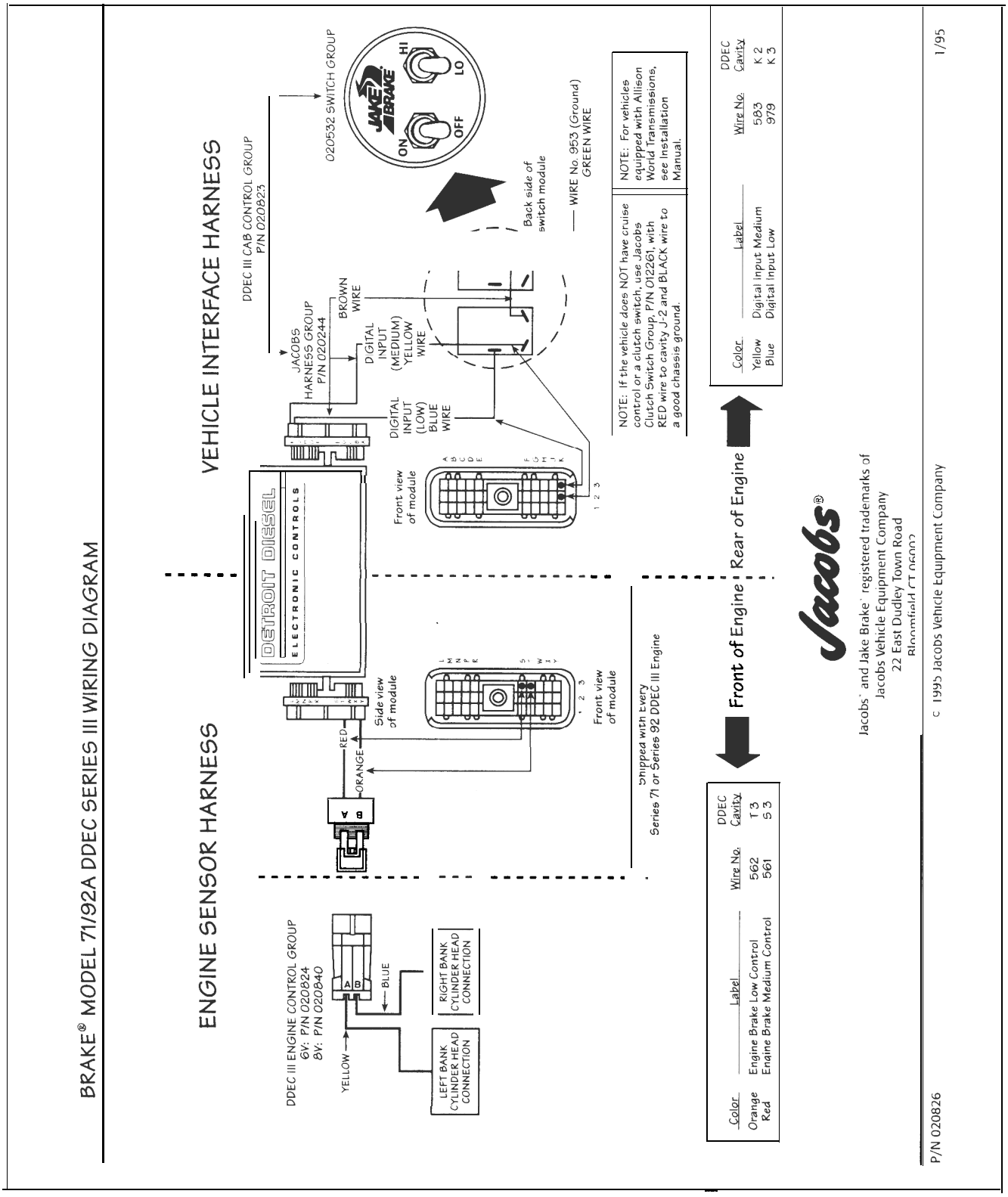

FIG. 1.1.52

1.2 Hydraulic/Mechanical

Theory of Operation

When an engine brake is energized, a power- producing diesel engine is converted into a power-absorbing air compressor. As shown in the schematic diagrams below, this is accomplished by the motion of a master-slave piston arrangement. Near the top of the normal compression stroke, the cylinder exhaust valves open releasing a compressed, cylinder charge to the exhaust system, preventing the engine from producing positive power.

Operational Sequence

Step 1 (Fig. 1.2.1)

The main components of the hydraulic system are the solenoid valve, the control valve, the master piston and the slave piston. The control valve and the solenoid valve regulate the flow of the engine oil, which acts as Jake Brake hydraulic fluid. As shown in this figure, when the Jake Brake is not in operation, the solenoid valve is closed, preventing engine oil from entering the system and allowing oil to drain to the sump from the previous operation.

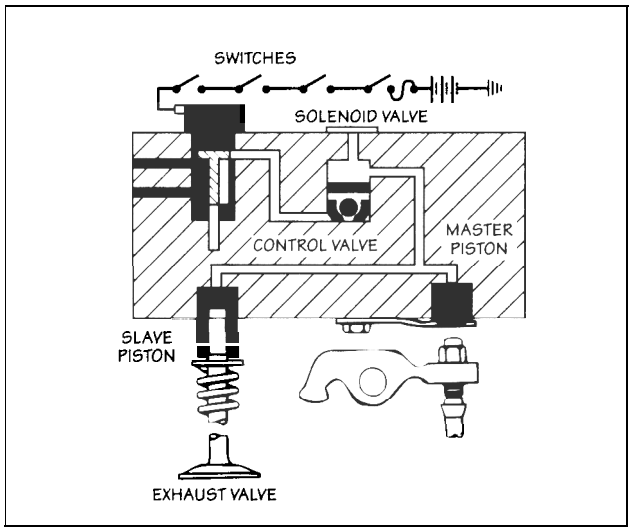

FIG. 1.2.1

Step 2 (Fig. 1.2.2)

When the solenoid valve is actuated, oil fills the passageway to the control valve. This exerts enough force to raise the control valve inside its bore and unseat the check ball inside the control valve. Engine oil then flows out through the control valve cross-port, fills the passageway between the slave and master pistons, and forces the master piston down against the injector rocker lever adjusting screw, or in some engines, the exhaust rocker lever adjusting screw of an alternate cylinder. This sequence connects engine camshaft motion to engine brake timing.

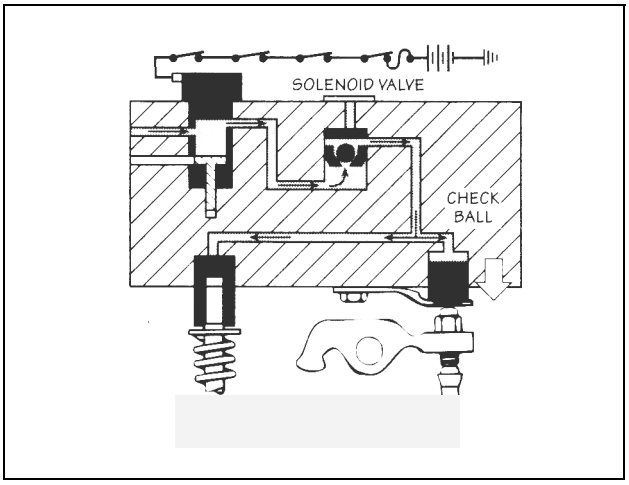

FIG. 1.2.2

Step 3 (Fig. 1.2.3)

When the rocker lever adjusting screw contacts the master piston, oil pressure increases and seats the check ball in the control valve. This creates a closed hydraulic system between the slave and master pistons. The oil pressure in the closed system increases and forces the slave piston down against the exhaust valve crosshead (bridge). The exhaust valves then open just before the engine piston reaches top dead center, releasing compressed air from the cylinder.

When electrical power is discontinued to the solenoid valve, engine lube oil is blocked from entering the brake housing. The inner control valve spring forces the control valve to the bottom of the control valve bore. The entrapped oil from the master piston/slave piston circuit can now escape from under the control valve cover, ending the engine brake cycle.

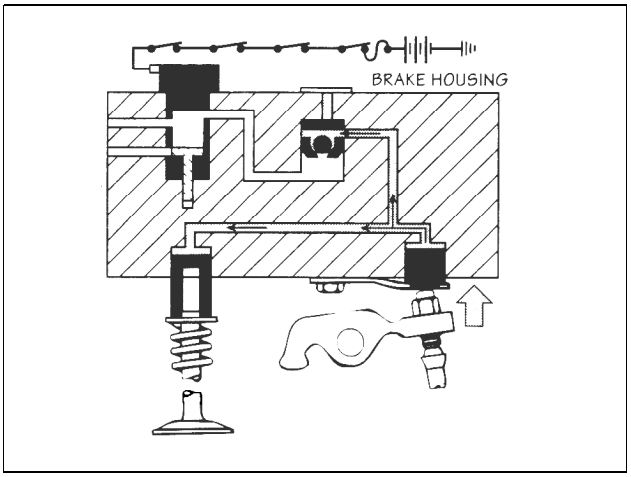

FIG. 1.2.3

Brake Housings and Rocker Groups Inspection

1. Before inspecting the brake housings and rocker groups, remove over-engine equipment such as air intake and turbocharger crossover pipes, plus the valve mechanism upper covers. With the valve covers removed, start the engine and let the engine warm up to operating temperature. Manually depress the solenoid cap and make the following checks

⚠ WARNING

WEAR EYE PROTECTION AND DO NOT EXPOSE YOUR FACE OVER ENGINE AREA. TAKE PRECAUTIONS TO PREVENT OIL LEAKAGE DOWN ON THE ENGINE.

WHENEVER ENGINE IS RUNNING AND VALVE COVERS ARE REMOVED, OIL SPLASHING IN THE ENGINE BRAKE AREA COULD CAUSE PERSONAL INJURY.

a. In Models 53/71/92 series, Models 59/903, 336 and Model 404, check all oil connector screws and seals to ensure that oil is being transferred to the adjacent housings and screws are not loose or broken.

b. Inspect the nylock plugs on housing ends where applicable to make sure none are leaking.

c. As solenoid cap is depressed, check master piston assemblies to ensure that no binding occurs and all drop from their respective bores evenly and immediately.

NOTE:

IN SOME CASES, IDLE OIL PRESSURE IS NOT ADEQUATE TO OPERATE THE ENGINE BRAKE (SEE FIG 1.2.5 FOR OIL PRESSURE REQUIREMENTS),

IF THIS CONDITION EXISTS, RAISE THE RPMS BY USING THE THROTTLE, RELEASE THE THROTTLE AND THEN MANUALLY DEPRESS THE SOLENOID.

d. Look for any cracks in the engine brake housings.

e. Look for leaks from the solenoid upper seal area.

2. Release solenoid cap and check for:

a. Immediate shut off. Check the condition of oil exhausted from the control valve cover. If exhausted oil has bubbles or is foamy in appearance, air is present in the system. Repeat this procedure several times. If aeration continues, the source of aeration must be determined before continuing with diagnostic procedures. Aeration causes a spongy brake because of reduced piston travel.

b. Quick and complete master piston retraction.

Engine Brake Housing Oil Pressure Check

To properly troubleshoot the engine brake, the mechanic **must** know the supply oil pressure reading to the engine brake housing. The mechanic must understand that the oil pressure reading on the instrument panel gage is **not** the same as at the engine brake housings.

Insufficient oil pressure to compress the control valve return spring or to cause deflection of the master piston return spring will prevent the brake from working. Partial or incomplete compression and deflection of these springs from marginal oil pressure supply will produce marginal, if any, brake performance.

NOTE:

WHEN MAKING OIL PRESSURE CHECKS ON JACOBS MODELS 401,404 AND 760 (NOT 760A OR 765), IT IS NECESSARY TO START AT IDLE SPEED AND THEN GRADUALLY INCREASE RPMS. THE ONE WAY CHECK VALVE IN THE HOUSING ENTRANCE PREVENTS THE TOTAL ESCAPE OF ENGINE OIL. IF FULL RPM OIL PRESSURE IS TAKEN FIRST, THAT PRESSURE IS ACCURATE. HOWEVER, WHEN THE RPMS ARE LOWERED, THERE IS ENOUGH ENTRAPPED OIL TO GIVE AN ARTIFICIALLY HIGHER READING. TO CORRECT THIS CONDITION, LOOSEN THE SOLENOID ADAPTERS AND ALLOW THE PRESSURE TO BLEED DOWN, THEN RETIGHTEN THE ADAPTER AND RECORD THE PRESSURE. SHUT DOWN THE ENGINE BEFORE LOOSENING THE SOLENOID.

If oil pressure is insufficient for engine brake operation, the engine should be examined by an authorized facility. Oil may be leaking past cam bearings, rocker bushings, or other oil-pressure-fed engine bearings, if worn. This can produce insufficient oil supply to operate engine brakes. Brakes could operate an higher RPM levels, but fade out at lower RPM levels.

On some of today's new diesel engines which operate at lower average regulated oil pressures, oil pressure values below 1000 RPM are not of great concern. Below this engine speed, the engine brake is least efficient. The old standard that the engine brake should stall the engine at idle as a troubleshooting technique is now outdated.

High oil pressure or "over pressur" can also cause poor braking by forcing the control valves to shut off the engine brake units. This can occur on models that have the control valve double spring over-pressure system. The double spring system allows the control valve to shut off the engine brake before oil pressure reaches a level which can cause the slave piston to jack.

See Fig. 1.2.5 for specific oil pressure requirements for the control valve springs used in the brake model you are working on.

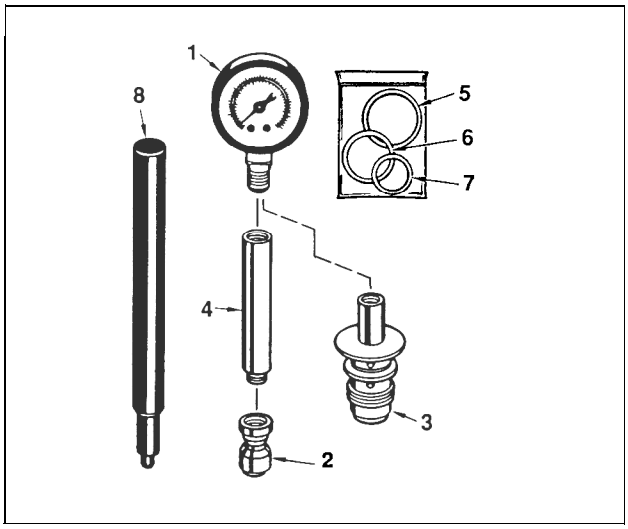

FIG. 1.2.4

Oil Pressure Test Kit, P/N 018280

Ill. No.	Part Name
1	Pressure Gauge
2	Body, Control Valve - Pressure Test
3	Solenoid Valve - Pressure Test
4	Adaptor - Pressure Test
5	Solenoid Seal Ring
6	Solenoid Seal Ring
7	Solenoid Seal Ring
8	Control Valve Cover Removal Tool
Nl	Tool Box
Nl	Instructions - Pressure Test
Nl	Chart, Oil Pressure

The tools in this kit can be used to determine ergine oil pressure available for operation of any model Jacobs engine brake. Complete instructions are contained in the kit.

WARNING

TO PREVENT PERSONAL INJURY, WEAR SAFETY GILASSES AND USE CAUTION WHEN WORKING ON AN ENGINE. WHEN ENGINE IS RUNNING, COVER OPEN AREAS WITH TOWELS TO REDUCE OIL SPRAY.

preliminary Checks

1. Before starting engine, check the following:

   a. Oil level on dipstick. Overfull or underfull condition in crankcase will cause aeration in the engine brake hydraulic system.

      If oil level is questionable, refer to manufacturer's charts for correct dipstick calibration. Re-calibrate if necessary.

   b. Condition of engine lubricating oil for presence of fuel or water or both. This indicates engine problems and must be corrected.

2. Check engine brake slave piston setting and engine valve injector settings. See applicable installation and service literature.

3. Weak, intermittent or no engine braking may be due to electrical, hydraulic or mechanical problems. Prior to using the test kit, check all electrical components, switches, wiring and slave piston adjustments.

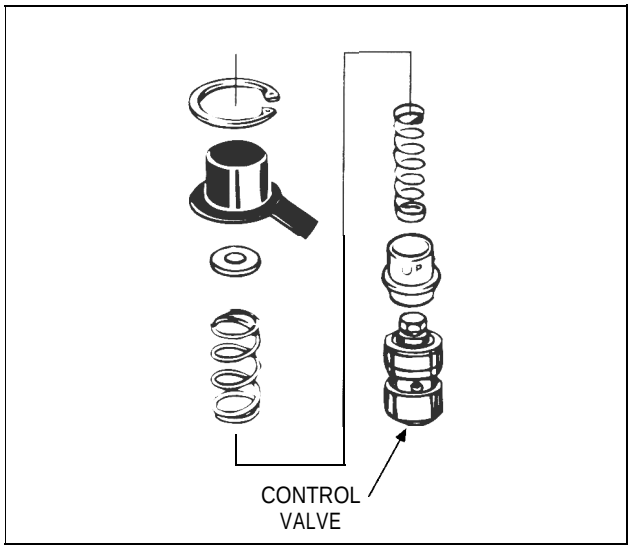

FIG. 1.2.5

NOTE:

COMPONENTS USED WITH THE CONTROL VALVES IN VARIOUS ENGINE BRAKE MODELS MAY DIFFER (SEE FIG. 1.2.5), BE SURE ALL PARTS ARE REINSTALLED IN THE SAME ORDER AS REMOVED. REFER TO INSTALLATION MANUALS FOR SPECIFIC MODELS IN QUESTION.

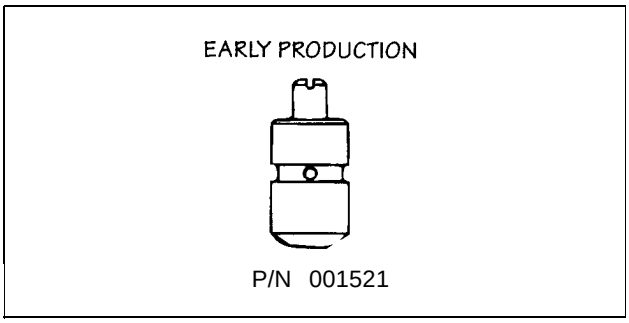

FIG. 1.2.6

Control Valve Component Inspection

WARNING

REMOVE CONTROL VALVE COVERS CAREFULLY. CONTROL VALVE COVERS ARE UNDER LOAD FROM THE CONTROL VALVE SPRINGS. REMOVE WITH CARE TO AVOID PERSONAL INJURY.

1. If any of the above problems are found, inspect the control valve components of the questionable cylinder for the following:

   a. Broken control valve springs.

   b. Smooth movement of the control valve in its bore.

   c. Spring tension and check ball seating in the base of the control valve body.

2. Apply pressure to the control valve cover and slowly remove the hex head capscrew or snap ring. Slowly raise the cover until all spring pressure is relieved.

3. Remove the control valve springs and other components, if applicable.

4. Using needle-nose pliers or fingertips, reach into the bore and grasp the stem of the control valve. Pull the valve straight up and out of its bore. If binding occurs, clean or replace if necessary.

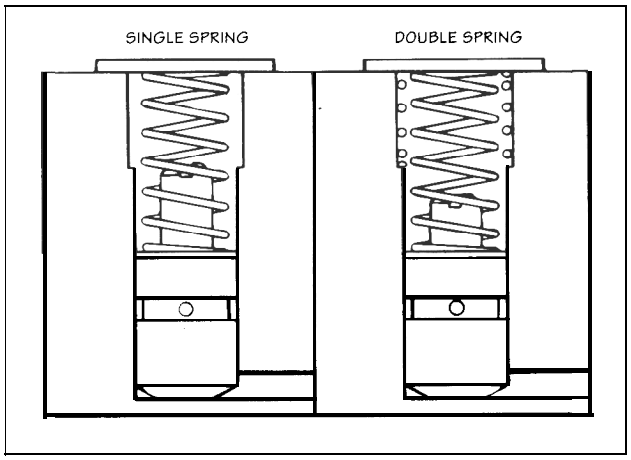

FIG. 1.2.7

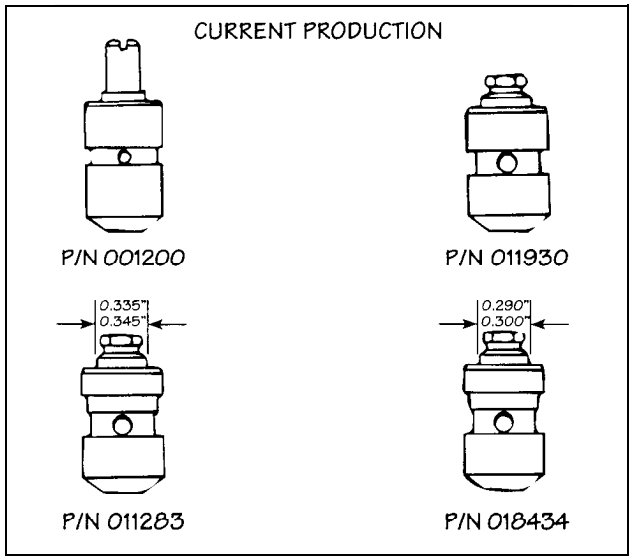

FIG. 1.2.8

Engine Brake Oil Pressure Requirements

Current Production Engine Brake Models

Model	Control Valve	Control Valve Springs	Fill Flow PSI	Over Press. PSI
317 B/C	018434	010504/19190	18-50	75
C336/A	011930	007500/010843	16-80	95
346D	011930	011435/011434	16-78	100
349/A	011930	011823/011434	20-87	95
404BG	011283	011823/011253	20-53	75
404D	011283	007500/011253	25-56	78
425A	011930	007500/001519	22-53	65
430	011930	007500/010843	16-80	95
440/A	011930	007500/011253	25-65	70
680A	011930	003109/010843	35-90	110
680B	011930	011823/010843	25-85	90
71/92A	011930	007500/011434	15-77	85
760A/765	011930	018179/001519	25-56	78

Past Product Engine Brake Models

C317A	018434	001518/011253	25-56	78
C346	001200	001518	25+	N/A
C346B/C	011930	011435/011434	16-78	100
20	001200	001012	20 - 58	N/A
30/25B	001521*	001518/001519	25-56	78
30E	011283	007500/001519	15-54	66
59/59A	001521	003109/003110	35-78	92
59B	001521	003109/010843	35-104	110
903	011930	001518/010843	25-80	90
K200	001200	003410	6+	N/A
K1150	001200	006536	16+	N/A
K1200	001521	007500/001519	15-54	66
400, 400H	011283	007500/001519	15-54	66
401A/B/C	007505*	007500/011253	15-46	65
404/404B	011283	011823/011253	20-53	75
404C	011283	007500/011253	25-56	78
425/420	011930	007500/001519	22-53	65
445	011930	007500/011253	25-65	70
675	001200	001518	25+	N/A
675A	011930	011435/011434	16-78	100
53A	011930	001012/001519	22-53	65
760	011930	001518/001519	25-56	78

* The Jacobs control valve, P/N 007505, has been superseded by P/N 011283. The Jacobs control valve, P/N 001521, has been superseded by P/N 011930.

CAUTION

DO NOT INTERMIX SPRING COMBINATIONS.

NOTES

1.3 General Problem Analysis

Tools and Parts Available for Servicing and Maintaining Jacobs Engine Brakes

Tool Box

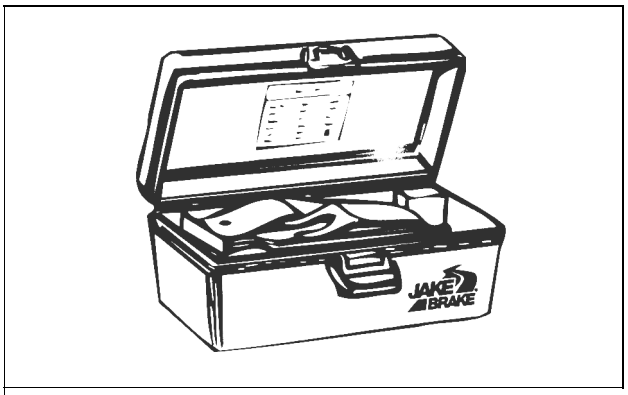

Tool Box for All Models: P/N 017469

Tool Boxes for Engine Families:

- Caterpillar: P/N 017465
- Cummins: P/N 017468
- Detroit Diesel: P/N 017466
- Mack: P/N 017467

Tool Box only: P/N 017471

Oil Pressure Test Kit

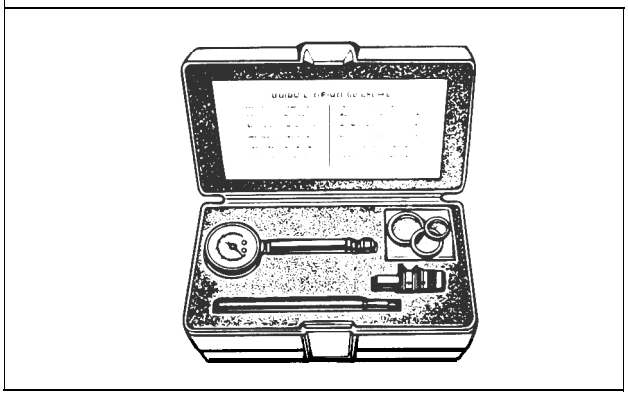

Use for all Jake Brake models to troubleshoot weak and/or no engine brake conditions.

Check engine oil supply pressure at the engine brake solenoid valve and the control valve.

Pressure gage, three adaptors, seals and control valve cover release tool packaged in a sturdy case.

Includes laminated chart with specifications for all past and current models.

Tune-up Kits

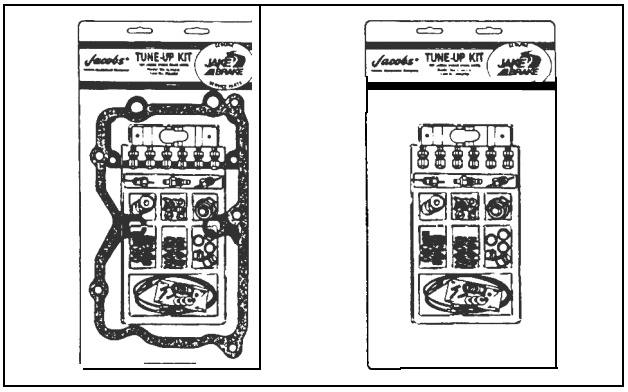

Genuine Jacobs replacement parts.

Everything needed for a complete tune-up in one convenient package.

Complete step-by-step instructions.

All parts include the latest Jacobs design improvements.

All parts backed by full Jacobs replacement parts warranty.

Problem: Engine fails to start

Probable Cause: Solenoid valve stuck in “on” position.

Correction: Ensure that electrical current is off to engine brakes. If solenoid valve remains “on” (cap down) with current off, replace solenoid valve.

Problem: Engine brake will not operate

Probable Cause: Blown fuse, open electrical leads.

Correction: Look for short circuit in wiring. Replace any broken, brittle of chafed wires. Check solenoid tab for signs of shorting; replace if necessary. Replace fuse (10 amp).

Probable Cause: On/off switch, clutch switch, throttle switch or multi-position switch out of adjustment or defective.

Correction: Use a volt/ohm meter to make certain that there is electrical current available at both terminals of each switch. Readjust if needed or replace if voltage will not pass through switch.



DO NOT TOUCH ELECTRICAL CONNECTION WHEN SYSTEM IS ENERGIZED.

Probable Cause: Incorrect electrical power source.

Correction: Power supply must be a minimum of 12 VDC. Recommended power source if from the key switch “on” position. Ensure that power is not taken from a source with an additional on/off switch, i.e., light switch. Make sure wiring is in accordance with Jacobs installation manual for brake model.

Probable Cause: Low engine oil pressure.

Correction: Determine oil pressure at engine brakes using procedures given in this manual (see Section 1.2 for oil pressure requirements). If oil pressure is below specifications, engine should be repaired in accordance with manufacturers’ procedures.

Problem: Engine brake activates with switches open (off)

Probable Cause: Center solenoid valve seal ring damaged.

Correction: Remove solenoid. Replace all seal rings.

Probable Cause: Engine brake improperly wired.

Correction: Check wiring in accordance with Jacobs wiring diagrams.

Problem: Engine brake slow to operate or weak in effect

Probable Cause: Lube oil cold and thick.

Correction: Allow engine to warm before operating brakes.

Probable Cause: Improper slave piston adjustment or slave piston binding in bore.

Correction: Readjust in accordance with Jacobs procedures for model brake in question. Ensure that slave piston responds smoothly to the adjusting screw by loosening jam nut and screwing the screw through its full travel for full slave piston motion. Make sure piston travels full range without binding or sticking.



REMOVE SLAVE PISTON CAREFULLY WHEN DISASSEMBLY IS NECESSARY. USE EITHER THE JACOBS SLAVE PISTON REMOVAL TOOL OR AN ARBOR PRESS. SLAVE PISTON SPRINGS ARE UNDER HEAVY COMPRESSION.

Probable Cause: Lower solenoid seal damaged, allowing oil to exit housing.

Correction: Remove solenoid valve and replace all seal rings.

Probable Cause: Solenoid screen clogged, stopping supply of oil to brake.

Correction: Remove solenoid valve and clean or replace screen.

Problem: Engine brake slow to operate or weak in effect (cont.)

Probable Cause: Master piston not moving in bore.

Correction: Inspect master piston and bore for scoring or burrs. If any present, clean surface with crocus cloth. If unable to remove burrs, replace piston or housing. Inspect lube oil for signs of contaminants. If any are present, replace oil and filters and correct cause of contamination.

Probable Cause: Control valves binding in housing bore.

Correction: Remove control valve. If body is scored, replace control valve. Check for contaminants in lube oil. Clean housing and control valve. If binding continues, replace housing.

Probable Cause: Control valve defective.

Correction: Remove control valve. Make sure check ball is seated in bore and can be moved off seat. Make sure there is spring pressure against ball. Flush in cleaning solvent. Replace if necessary.

Probable Cause: Switch operation sluggish. Check dash switches, clutch switch, throttle switch.

Correction: Readjust or replace switch. Check throttle or clutch return springs for proper operation. On 71/92A, ensure engine is going to "no fuel" position and governor riser bearing is allowing free governor operation.

Probable Cause: Solenoid valve operation erratic

Correction: Check solenoid valve using electrical specifications explained in this manual or, with key on, brake switches on, and engine off, activate solenoid electrically. Ensure solenoid cap depresses

⚠WARNING

DO NOT TOUCH ELECTRICAL CONNECTION WHEN SYSTEM IS ENERGIZED.

Probable Cause: Engine brake housing plugs leaking.

Correction: Check plugs for signs of leaks. If leaks are present, remove plug, clean threads and install at 100 lb.-in. (11 N•m) torque. Use Jacobs plugs.

Probable Cause: Outer control valve spring broken, or engine oil pressure extremely high (see Section 1.2).

Correction: Outer control valve spring broken, allowing control valve to over-index. Problem is engine lube system. Consult appropriate engine repair manual for causes of high lube oil pressure.

Problem: Oil pressure dropping below minimum required for engine brake operation

Probable Cause: Upper solenoid seal ring damaged.

Correction: Remove solenoid. Inspect seal ring and replace all seal rings.

Probable Cause: Damaged oil supply seals under or between housings.

Correction: Remove housing and replace seals. Inspect for cracked or broken oil connectors, replace seals.

Probable Cause: Aeration of lubricating oil.

Correction: Check for aeration of the oil. Activate, then deactivate engine brake. Watch escape oil coming from control valve cover. If oil has bubbles or if foamy, air is present in system. Aeration can be caused by the crankcase being too full of oil or not enough oil being present in the crankcase, a crack in the oil pickup tube or leaks in the oil suction tube or hose. Correct in accordance with manufacturer's procedures.

Probable Cause: Lubricating oil being diluted by fuel oil.

Correction: Have an oil analysis of lube oil to determine if fuel is present. Correct per engine manufacturer's procedures.

Probable Cause: Low engine oil level.

Correction: Consult engine manual for specifications. Add oil or re-calibrate dipstick as required.

Probable Cause: Worn engine rocker lever bushings.

Correction: Replace bushings in accordance with engine manufacturer's procedures.

Probable Cause: Oil leaking from around cylinder head.

Correction: Repair causes of leaks.

Probable Cause: Restrictions in the oil passages leading to engine brake.

Correction: Inspect all the passageways, remove any items restricting oil flow.

Probable Cause: Models 401,404 and 760 only (not 760A or 765). Check ball valve assembled inversely or more than one spring is used.

Correction: Remove check ball valve. Check number of springs used. Reassemble, using one spring, in the following order:

Model 401: First insert the spring, then the ball, washer and retaining ring.

Models 404 and 760: First insert the ball, then the spring and plug.

Problem: One or more cylinders fail to stop braking or engine stalls.

Probable Cause: Control valve inner spring broken.

Correction: Replace inner spring.

Probable Cause: One or more control valves stuck in "on" or up position.

Correction: Check control valves for binding. Remove and clean or replace if necessary. Inspect lube oil for contaminants.

Probable Cause: Solenoid valve sticking in "on" position.

Correction: If solenoid valve cap remains down with no electric current being supplied, replace solenoid valve.

Probable Cause: Center solenoid seal ring damaged. Allows oil to enter brake with solenoid valve closed.

Correction: Remove solenoid and replace all seal rings.

Probable Cause: Solenoid valve exhaust plugged.

Correction: Remove any restrictions at exhaust (bottom) of solenoid valve.

Probable Cause: Clutch switch or throttle switch stuck in "on" position or out of adjustment.

Correction: Check for proper operation. Readjust or replace as needed.

Problem: Engine misses or loses power.

Probable Cause: Slave piston adjustment too tight.

Correction: Readjust slave piston clearance in accordance with appropriate Jacobs installation manual.

Probable Cause: Insufficient clearance between exhaust crosshead and underside of exhaust rocker lever (Cummins engine applications only).

Correction: Pass a 0.020" wire gage between back section of crosshead and underside of rocker lever. If 0.020" clearance cannot be obtained, change crosshead with another cylinder and re-measure. If clearance still cannot be obtained, check for bent crosshead guide pin or enlarged rocker lever. Replace as required.

Probable Cause: Auto-Lash® plunger in full extended position (Cummins engine applications only).

Correction: Check for over-torque of locknut. Re-torque to 25 lb.-f-t. maximum. If condition continues, replace Auto-Lash.

Problem: Sudden drop in engine lube oil pressure.

Probable Cause: Oil inlet supply seal missing or damaged.

Correction: Replace seal.

Probable Cause: Upper solenoid valve seal missing or damaged.

Correction: Remove solenoid and replace upper seal ring.

Probable Cause: Models 71/92 and 53A rapid dilution of lube oil caused by loose or cracked fuel pipes.

Correction: Inspect fuel pipes for proper torque (10 lb.-ft.) or cracks at flare ends. Start engine. Pressure check heads for signs of more pipe leakage. Replace any showing signs of leakage.

Probable Cause: External oil supply hoses or fittings cracked and leaking.

Correction: Inspect all hoses and fittings for tightness, chafes or cuts. Replace or repair as necessary.

Probable Cause: Oil connectors between housings (where applicable) broken or leaking.

Correction: Inspect all oil connectors for cracks and broken or loose screws. Look for missing seals and seals that are brittle split or damaged. Replace as required.

1.4 Engine Brakes for Cummins Engines

Two-valve Design

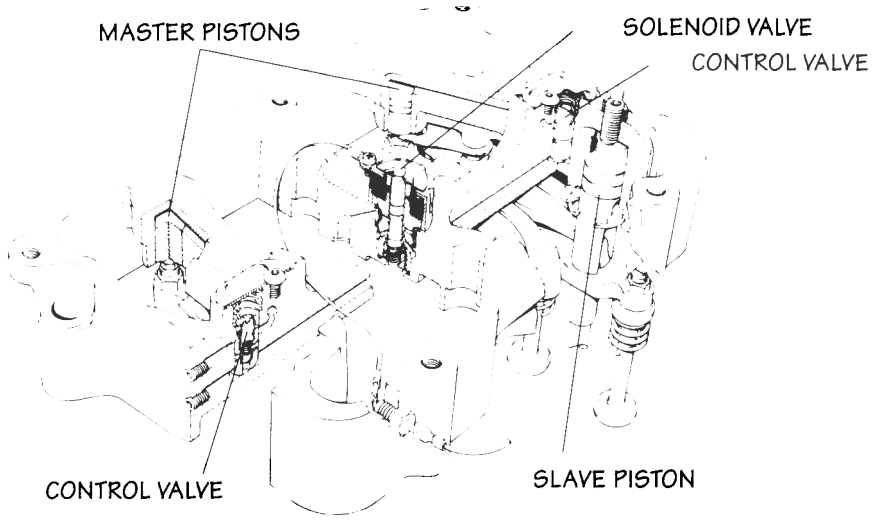

FIG. 1.4.1

Current Production Models

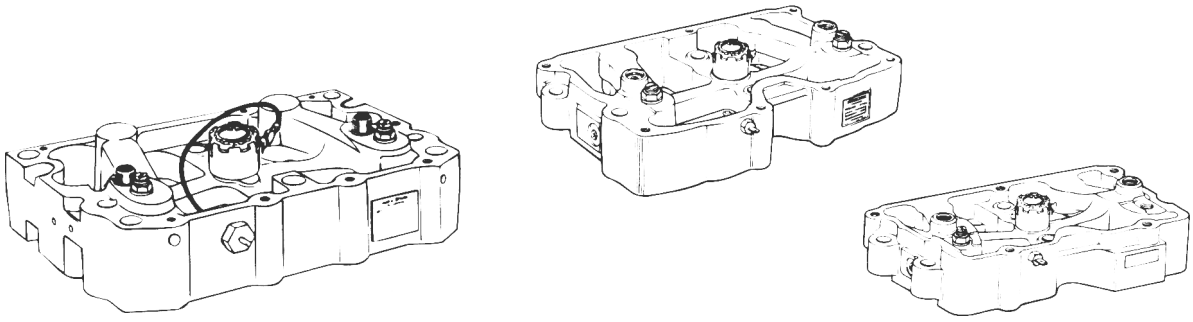

Model 450A/450B	**Model 440/440A**	**Model 430**	**Model 425A**
'94 N14 CELECT	Pre '94 N14 STC and N14 CELECT	88/89 NT	All NT 855 cu. in. except 88/89 NT

Fig. 1.4.2

Former engine brake models for Cummins NT-855 cu. in. engine applications:

25	25B	30	30E
30 SN (Spray Nozzle)	400	400H	

The former Models 401A/B/C single-valve design were also used for Cummins 855 CID engines (see Page 1.4.3).

For proper application information, refer to your nearest Jacobs Warehouse Distributor or your Jacobs Field Representative.

Special Features

Auto-Lash': Used in Jacobs Engine Brakes for Cummins Engines with two-valve operation only.

The Auto-Lash adjusting screws are designed to provide optimum exhaust valve opening during engine brake operation. Each engine brake model uses a different Auto-Lash; the distinguishing feature is the amount of plunger protrusion. The plunger protrusion amount is directly related to engine brake timing advancement.

⚠ CAUTION

AUTO-LASHES CANNOT BE INTERMIXED

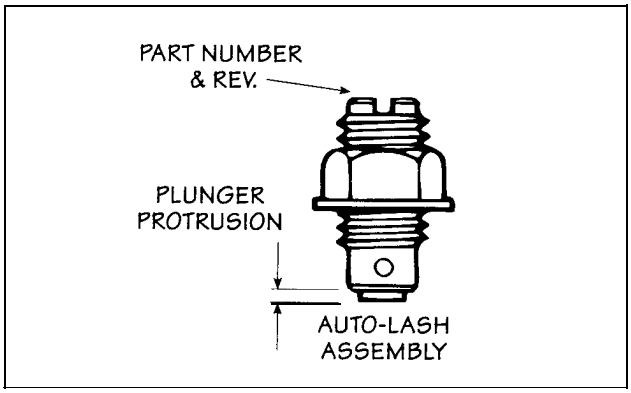

FIG. 1.4.3

Part Number Identification & Matrix

Refer to specific engine brake model parts manual for proper Auto-Lash.

Operation (example only)

Engine brake in "OFF" mode. Static setting of 0.018" clearance for normal engine operation (see Fig. 1.4.4).

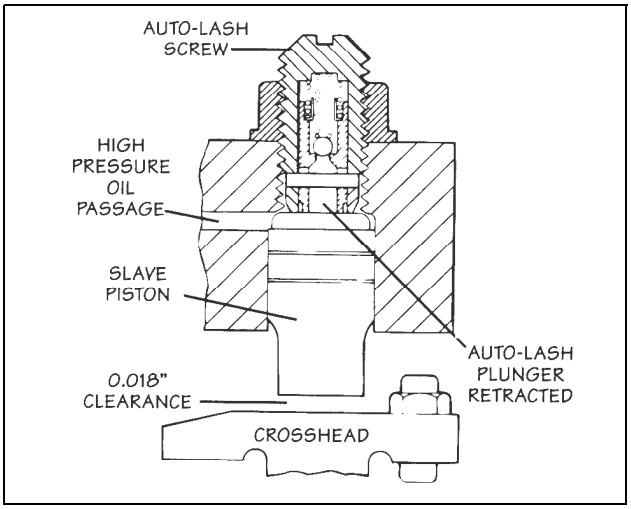

FIG. 1.4.4

Engine brake in "OPERATING" mode. Clearance of 0.009" for more valve opening.

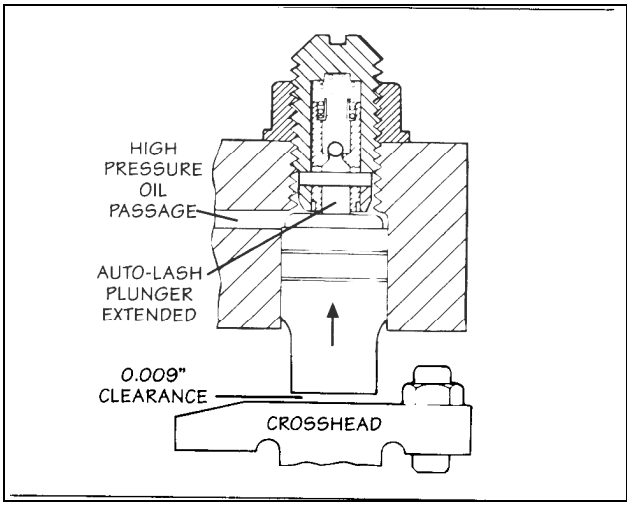

FIG. 1.4.5

During engine brake operation, the spring inside the Auto-Lash assembly moves the plunger out to its fullest extension (see Fig. 1.4.5). Oil under pressure enters the Auto-Lash body through the hole in the plunger and "locks" the plunger in its extended position. This reduces the slave piston clearance from 0.018" to 0.009" (Model 400 Auto-Lash example).

Slave piston travel provides optimum exhaust valve opening for most effective engine brake operation for this engine/ engine brake combination (see Fig. 1.4.6).

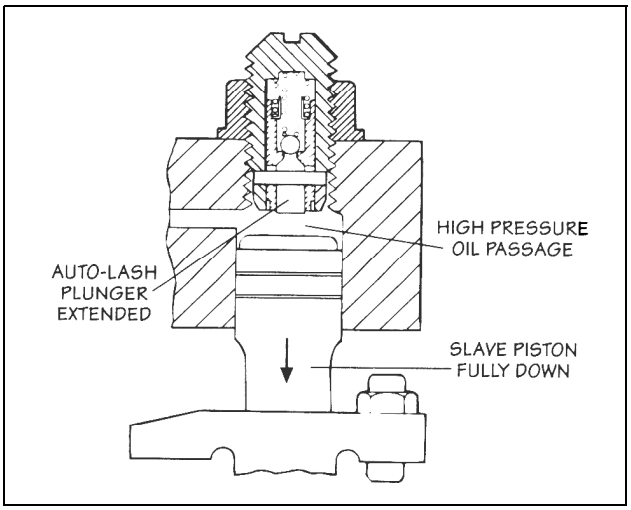

FIG. 1.4.6

When the engine brake is shut off, the oil bleeds off and the plunger retracts from the force of the slave piston spring. The slave piston clearance returns to 0.018" for normal engine operation (see Fig. 1.4.4).

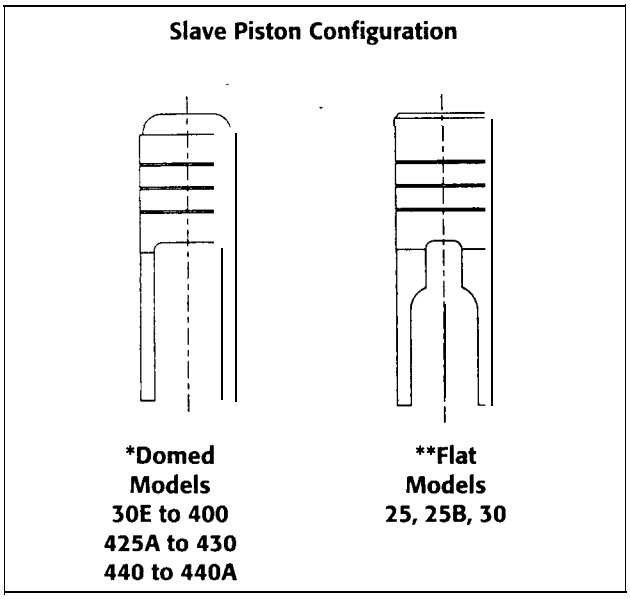

FIG. 1.4.7

Short Slave Piston Part Numbers for Reworked Cylinder Heads and Exhaust Valves

	Domed*	Flat**	425A	430	440/ 440A
Stand	007623	001484	017409	014864	017409
Short	007696	001486	017728	017078	017728

Short slave pistons may be required where cylinder heads and exhaust valves have been reworked. Valve stems may protrude too high above cylinder head to allow for sufficient slave piston-to-crosshead clearance

Single-valve Design

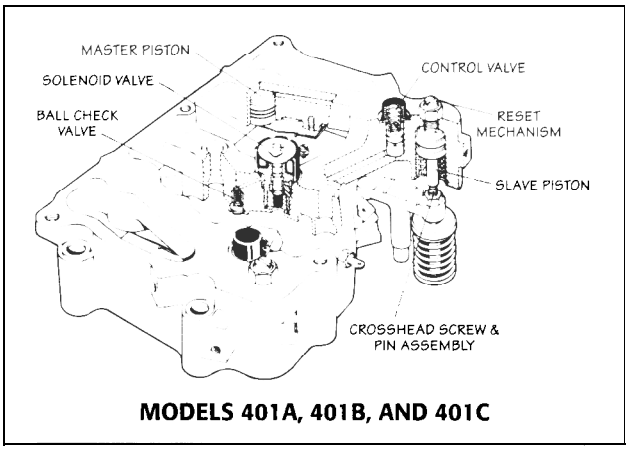

FIG. 1.4.8

Some early model engine brakes for 855 CID engines used a single-valve operating system. Only one exhaust valve per cylinder is opened during engine braking. The two-valve operation opens two exhaust valves.

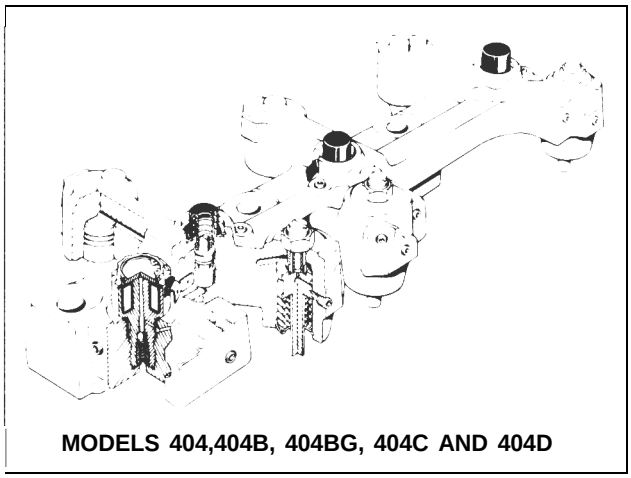

FIG, 1.4,9

The major difference between the brake models is the diameter of the master piston. Neither the master pistons nor the housings are interchangeable.

Model	Master Piston Diameter
401A	0.938”
401B	0.875”
401C	1.000”
404	0.875”
404B	0.875”
404BG	0.875”
404C	0.6875”
404D	0.6875”

Special Features

Guideless Crossheads

All 91L1O and later engines use guideless crossheads (Fig. 1.4.10).

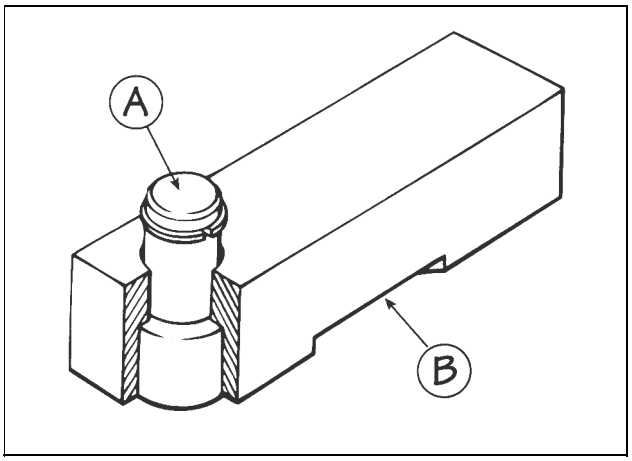

FIG. 1.4.10

A. Jacobs retained actuator pin

B. Jacobs guideless crosshead assembly

CAUTION

DO NOT DISASSEMBLE THE ACTUATOR PIN FROM THE JACOBS CROSSHEAD. THE ASSEMBLY IS MADE UP OF MATCHED PARTS AND MUST NOT BE FIELD SERVICED.

Lubricate the actuator pins and valve stems with engine oil and install the Jacobs crossheads over the exhaust valves. Locate the actuator pins on the exhaust valves closest to the rocker shaft.

The crosshead should move freely from side to side, pivoting on the side without the actuator pin. No adjustment is required with guideless crossheads.

Crosshead Screw and Pin Assembly

The crosshead pin assembly is a key component in the single-valve system. The pin assembly allows for only one valve to be opened by the engine brake slave piston. It allows for the re-use of the Cummins exhaust crosshead, simplifying installation. The pin assembly replaces the Cummins crosshead adjusting screw and nut and can be adjusted using Cummins procedures. The pin assembly requires no specific maintenance.



FIG. 1.4.11

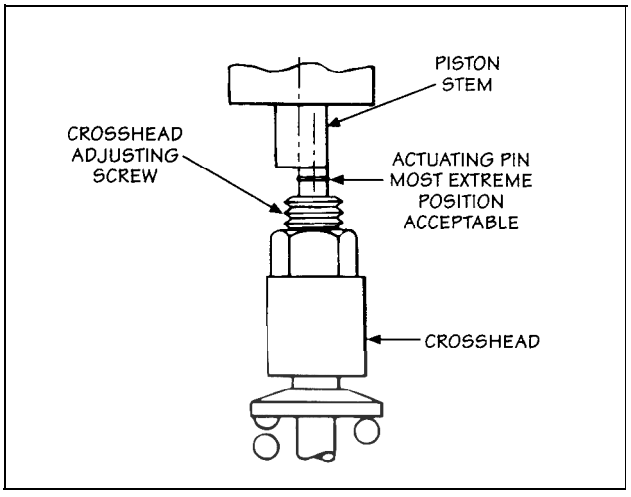

FIG. 1.4.12

Check Ball Valve: Used in Models 401 and 404

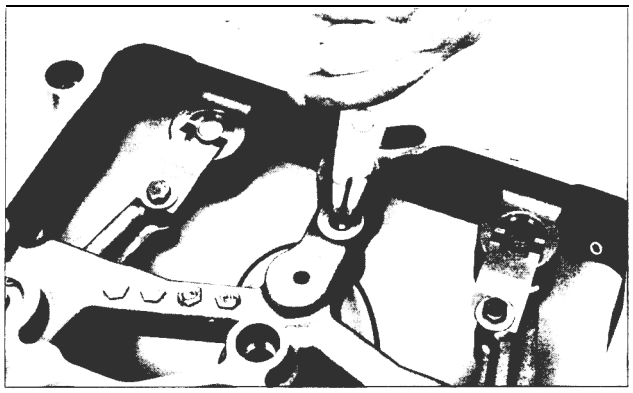

FIG. 1.4.13

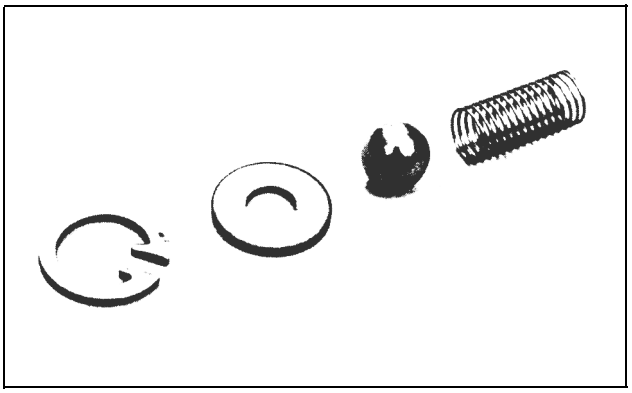

FIG. 1.4.14

The check ball mechanism in the single-valve engine brake is used to prevent the high-pressure oil that is passing through the slave piston drillings from leaving the engine brake housing. If the oil did escape from the housing, the normal engine oil supply would be insufficient to make up the loss of oil and the engine brake performance would be greatly reduced.

During reassembly, pay special attention to the proper sequence of reinstalled parts and make sure that the proper parts are used.

Reset Mechanism: Used in Models 401 and 404

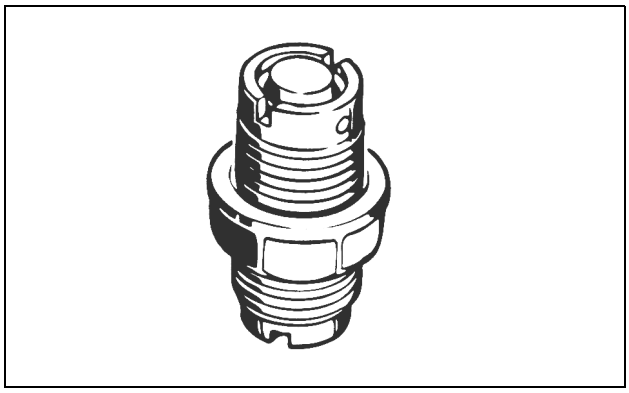

FIG. 1.4.15

The purpose of the reset mechanism is (1) to allow the opening of a single exhaust valve during engine brake operation: and (2) after the energy is released from the cylinder, to close the exhaust valve that was open before the normal exhaust rocker motion begins. This prevent excessive side loading on the engine's crosshead guide pin.

Reset Design

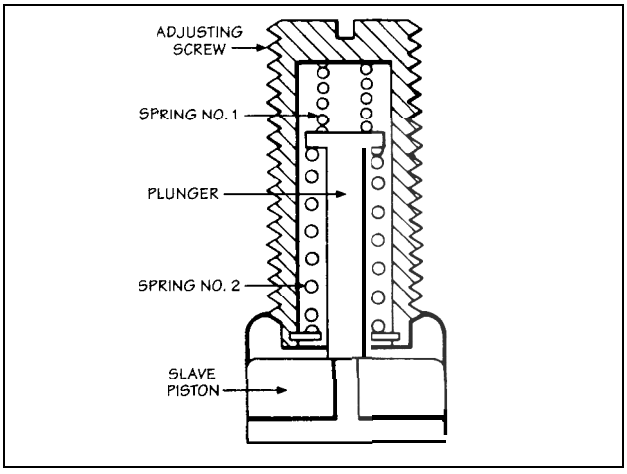

FIG. 1.4.16

The main components are the screw body, the plunger and two springs. Spring #1, on top of the plunger, holds the plunger lightly against the slave piston upper hold, preventing the oil from flowing out too early in the engine brake cycle. Spring #2 pops the plunger off the slave piston when the reset mechanism activates. This uncovers the upper slave piston hole and allows the oil to flow to the bottom of the control valve bore.

Initially, the top spring holds the reset plunger against the slave piston and covers a hole in the top of the slave piston. When the engine brake is activated and engine oil pressure moves the master piston down against the injector adjusting screw, the rocker upward motion starts building high hydraulic pressure in the engine brake high-pressure circuit. The slave piston moves down against the Jacobs crosshead pin assembly and the engine exhaust valve stem. The oil in the housing high-pressure circuit build pressure rapidly, producing the force required to open the exhaust valve.

Since the area above the reset plunger is greater than the area under it, the plunger is forced down with the slave piston, keeping the top hole sealed.

As the slave piston moves down on the exhaust valve stem, the reset plunger follows the slave piston and compresses Spring #2. At this time, the high oil pressure above the reset plunger is greater than pressure from Spring #2, and the plunger continues following the slave piston.

When the exhaust valve is opened and the compressed air leaves the cylinder, the high pressure in the housing drops rapidly. When the oil pressure drops below the force of Spring #2, the spring forces the plunger back into the screw body and the hole in the top of the slave piston is uncovered. The oil passes through the hole in the top of the slave piston, out through the crosshole and into the passage to the bottom of the control valve bore. Since this oil is still at a relatively high pressure, it moves the control valve upward. This reduces the pressure to nearly that of how-pressure supply oil.

With oil pressure reduced, the slave piston springs return the slave piston to the start position and the engine exhaust valve closes. The engine valve is closed before normal engine exhaust motion begins. The engine exhaust rocker pushes against the crosshead with both exhaust valves opening together.

The engine brake is now ready for another cycle.

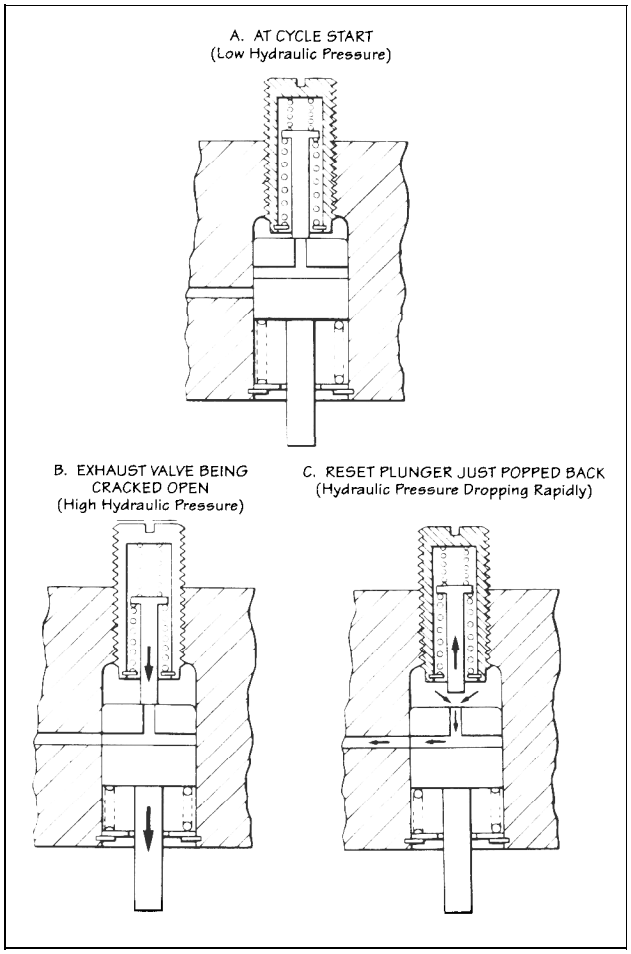

FIG. 1.4.17

Short Slave Piston Part Numbers for Reworked Cylinder Heads and Exhaust Valves

	401	404/BG/C/D	404-404BG
Standard	009439	016774	011377
Short	012397	017260	012419

Short slave pistons may be required where cylinder heads and exhaust valves have been reworked. Valve stems may protrude too high above cylinder head to allow for sufficient clearance between slave piston and crosshead screw and pin assembly.

1.5 Engine Brakes for Caterpillar Engines

Model 346D

The Model 346D Jake Brake Engine Retarder is designed and approved for use on all Caterpillar engines: 3406, 3406B and 3406C (with an serial number of 5KJ07800 and above or with an engine serial number of 3Z116182 and above). The Model 346D replaces the former Models C346, C346A, C346B and C346C.

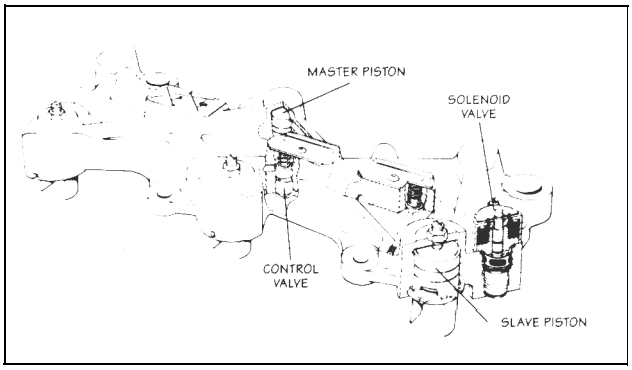

FIG. 1,5,1

Master-Slave Circuit Relationship Listed in Engine Firing order

Location of Master Piston	Location of Slave Piston
Actuates	
No. 1 Pushrod	No. 3 Exhaust Valve
No. 5 Pushrod	No. 6 Exhaust Valve
No. 3 Pushrod	No. 2 Exhaust Valve
No. 6 Pushrod	No. 4 Exhaust Valve
No. 2 Pushrod	No. 1 Exhaust Valve
No. 4 Pushrod	No. 5 Exhaust Valve

CHART 1

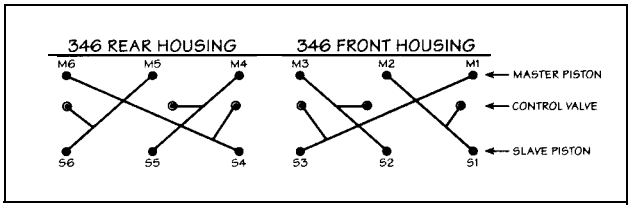

CHART 2

Special Features

Exhaust Rocker Adjusting Screw

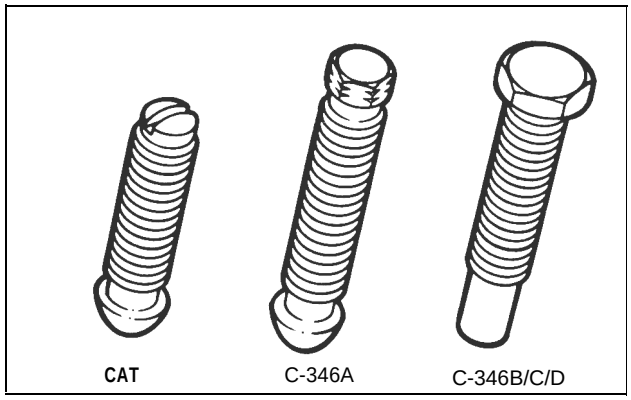

FIG, 1.5.2

The large headed screws can be used with C346A and C346 housings. If large-headed screws are used on C346A and C346 housings, Model C346B/C/D master piston return springs must also be used. See parts manual for part numbers.

Slave Piston Adjusting Screw

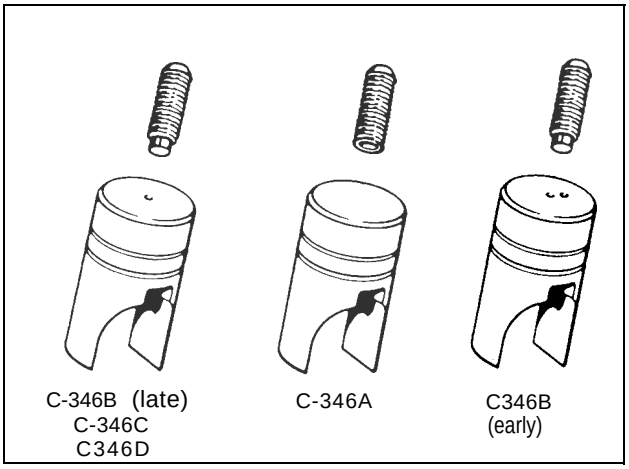

FIG. 1.5.3

The Models C346 and C346B use an adjusting screw with a spring loaded valve at the slave piston end. Note that the adjusting screws are different and have different part numbers and are not interchangeable..The adjusting screw valve seals the center hole in the slave piston during engine brake operation. The piston used in the early production C346B also has a 0.025" (0.64 mm) diameter bleed hole located to the side of the center hole.

The Model C346A uses a solid adjusting screw and a solid slave piston **(no hole through the top).**

NOTE:

IT IS RECOMMENDED THAT C346A HOUSING BE CONVERTED TO INCLUDE NEW ADJUSTING SCREWS AND SLAVE PISTONS. THESE PARTS ARE ONES CURRENTLY USED IN C346D HOUSINGS.

⚠ CAUTION

SOLID ADJUSTING SCREWS MUST NOT BE USED IN MODEL C346, C346B, 346C AND 346D HOUSINGS BECAUSE THE HOLE IN THE TOP OF THE SLAVE PISTON WILL NOT BE SEALED AND ENGINE BRAKING WILL BE LOST. EXCESS OIL WILL BE SPILLED IN THE OVERHEAD.

⚠ CAUTION

DO NOT TAMPER WITH THE ADJUSTING SCREW ASSEMBLY. ENGINE DAMAGE COULD RESULT.

NOTE:

FOR C346B APPLICATIONS, A "B+ UPGRADE KIT" CAN BE INSTALLED TO IMPROVE RETARDING PERFORMANCE. SEE A JACOBS DISTRIBUTOR OR DEALER FOR DETAILS.

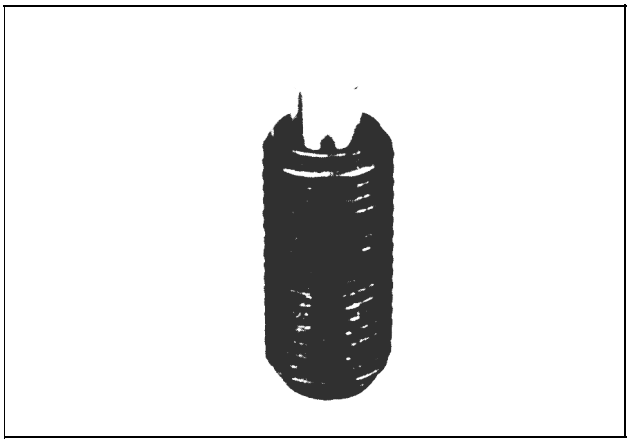

FIG. 1.5.4

Model 349A

The Model 349A Jake Brake Engine Retarder is designed and approved for use on Caterpillar 3406B ATAAC (Air-to-Air After-cooled) engines with PEEC or mechanical fuel controls. The Model 349A replaces the former Model 349.

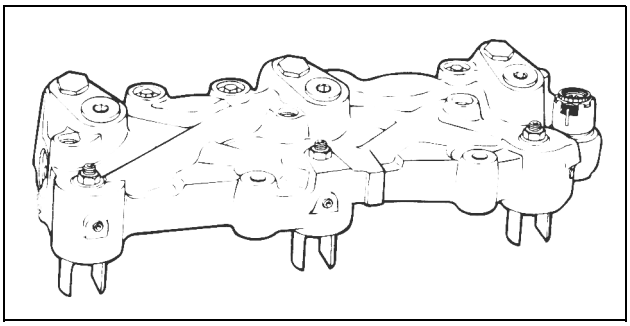

FIG. 1.5.5

⚠ CAUTION

THE MODEL 349A IS NOT TO BE INSTALLED ON 3406B ENGINES WITH SERIAL NUMBERS LOWER THAN 7FB39279 OR ANY 3406 ENGINES WITH THE 92U SERIAL NUMBER PREFIX.

Master-Slave Circuit Relationship Listed in Engine Firing Order

Location of Master Piston	Location of Slave Piston
Actuates	
No. 1 Pushrod	No. 3 Exhaust Valve
No. 5 Pushrod	No. 6 Exhaust Valve
No. 3 Pushrod	No. 2 Exhaust Valve
No. 6 Pushrod	No. 4 Exhaust Valve
No. 2 Pushrod	No. 1 Exhaust Valve
No. 4 Pushrod	No. 5 Exhaust Valve

CHART 3

Model 349A Operating Schematic

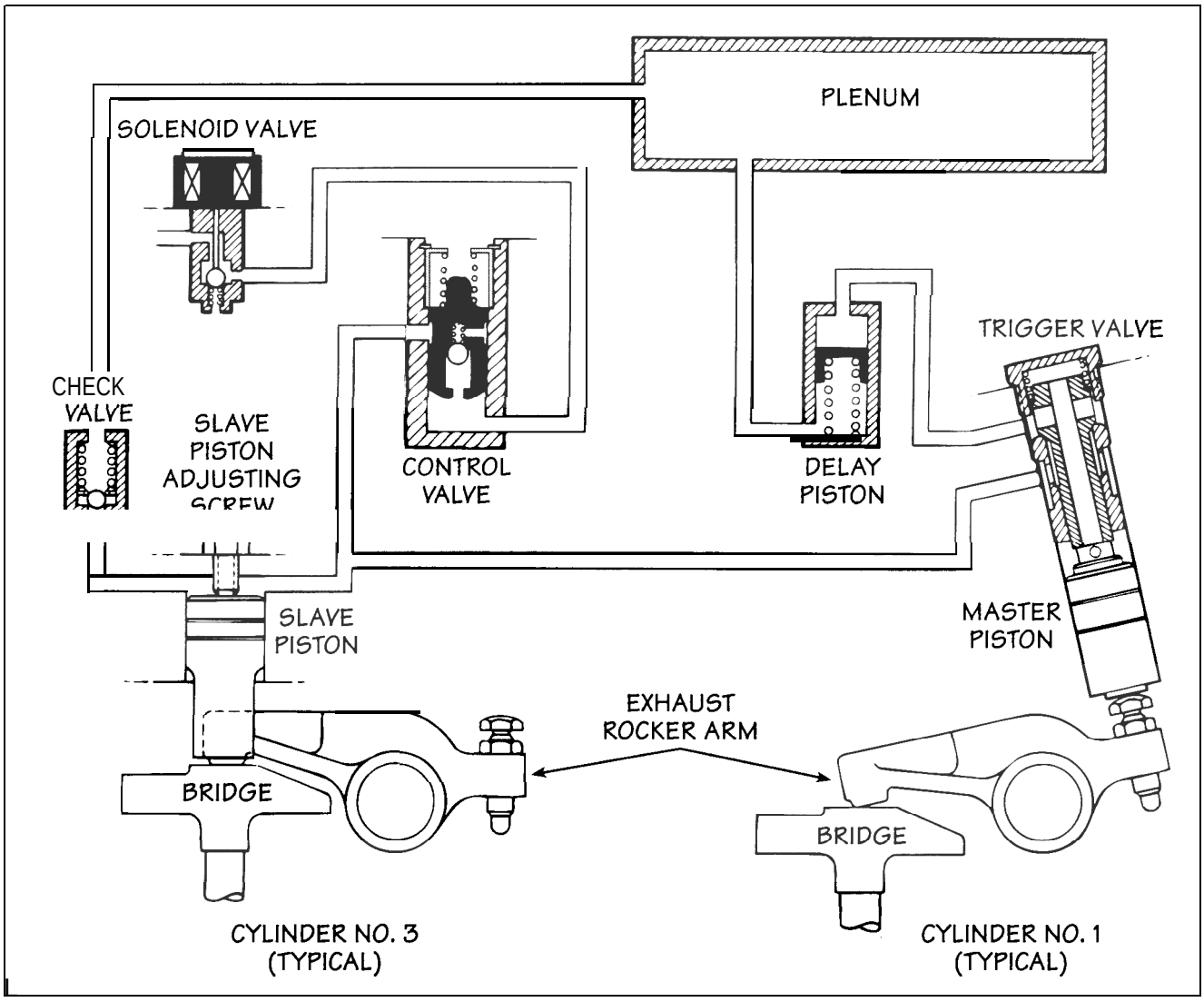

FIG. 1.5.6

Exhaust Blowdown

The braking cycle is accomplished by utilizing the pushrod motion of an exhaust valve of another cylinder during its normal exhaust cycle. Referring to the chart above, Cylinder No. 1 exhaust pushrod opens the exhaust valves of Cylinder No. 3 in this sequence:

1. The energized solenoid valve permits engine lube oil to flow under pressure through the control valve to both the master piston and the slave piston.
2. Oil pressure causes the master piston to move down, coming to rest on the corresponding exhaust rocker arm adjusting screw. See the accompanying chart for master/slave operation relationship.
3. The exhaust rocker pushrod begins upward travel (as in normal exhaust cycle) forcing the master piston upward and creating a high pressure oil flow to the delay piston.
4. The delay piston moves and compresses the plenum oil to high pressure. The delay piston and plenum act as a high pressure “spring” to activate the slave piston at the appropriate time.
5. The master piston continues moving upward and at the appropriate time, opens the trigger valve.
6. High pressure oil flows from the delay piston through the trigger valve to the slave piston.
7. The slave piston moves down, contacts the exhaust valve bridge and opens the exhaust valves releasing compressed cylinder air to the exhaust manifold.
8. Compressed air escapes to atmosphere, and energy spent compressing air is lost, providing retarding power.
9. The master piston moves down, the slave piston retracts and the trigger resets, completing the compression braking cycle.

Slave Piston Adjustment

For correct slave piston adjustment procedures and settings, refer to specific installation manual and current service publications.

Trigger Valve Adjustment

NOTE:

REMOVE TRIGGER CAPS AND SPRINGS FROM ALL CYLINDERS BEFORE ADJUSTING TRIGGER.

Trigger valve travel adjustment is set according to the settings shown in the following chart:

Trigger Adjustment

Cylinder No.	Pre-1991 Model Year	1991 and later Model Year 34066 and 3406C 400 HP	1991 and later Model Year All Others
1	0.100"	0.130"	0.100"
2, 3, 4, 5, 6	0.100"	0.095"	0.100"
ALl adjustments are ± 0.003"			

CHART 4

⚠ CAUTION

CYLINDER NO. 1 TRIGGER VALVE SETTING ON 1991 AND LATER MODEL YEAR ENGINES WITH 400 HORSEPOWER IS DIFFERENT THAN FOR THE OTHER CYLINDERS ON THAT ENGINE.

NOTE:

TRIGGER VALVE ADJUSTMENT AS WELL AS SIAVE PISTON ADJUSTMENT MUST BE MADE ANY TIIME THE BRAKE HOUSINGS ARE REMOVED AND REPLACED.

After the engine valves and slave pistons are adjusted on all cylinders, the trigger valves should be adjusted using the trigger adjusting group shown in Fig. 1.5.7.

⚠ CAUTION

MAKE THIS ADJUSTMENT CAREFULLY AND ACCURATELY TO ASSURE MAXIMUM ENGINE BRAKE PERFORMANCE AND TO PREVENT POSSIBLE ENGINE DAMAGE. THE JACOBS TRIGGER ADJUSTMENT GROUP IS REQUIRED FOR THIS ADJUSTMENT.

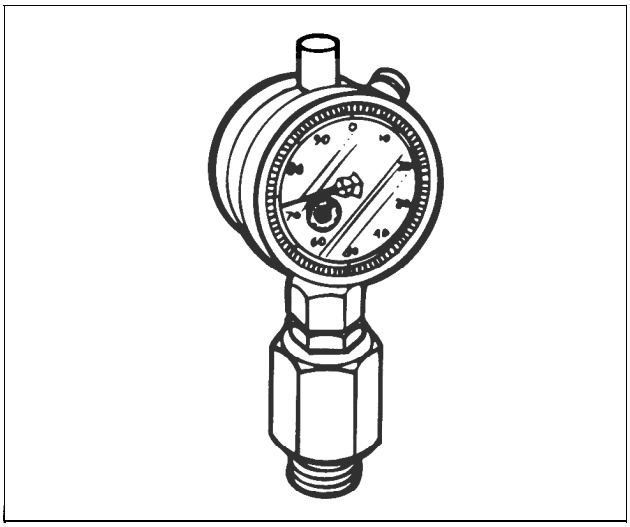

FIG. 1.5.7

1. Remove trigger caps and springs from ALL cylinders before adjusting the trigger. Do not remove trigger valve (see Fig. 1.5.8).

   The first trigger adjustment should be made on the cylinder last adjusted for slave piston lash.



FIG. 1.5.8

2. Install the dial indicator assembly into the trigger valve bore (see Fig. 1.5.9). Hand tighten, metal to metal contact only,

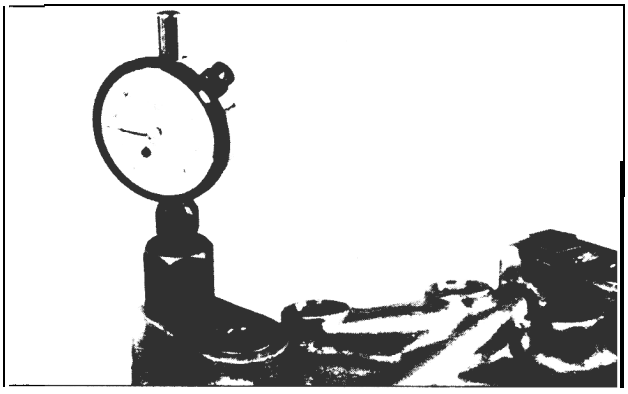

FIG. 1.5.9

indicator extension will contact the trigger valve and push the master piston down slightly (see Fig. 1.5.10).

NOTE:

THE MASTER PISTON MUST NOT COME IN CONTACT WITH THE EXHAUST ROCKER ADJUSTING SCREW AT THIS TIME.

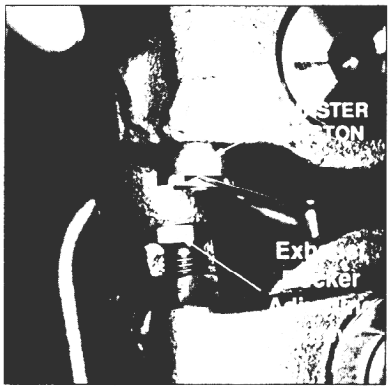

FIG. 1.5.10

3. Set the indicator to zero.

4. Rotate the engine crankshaft slowly in the direction of rotation. The exhaust rocker adjusting screw will contact the master piston and the dial indicator needle will begin to move. Record the maximum travel of the indicator.

   Travel must be set according to Trigger Adjustment Chart (Chart 3) on page 1.5.4.

5. Use the following procedure to adjust the trigger travel. The indicator travel must be within ±0.003° of specific trigger adjustment as shown in the chart on page 1.5.4.

If necessary to further adjust trigger travel:

A. Remove the dial indicator/adapter assembly and insert a long 5/32" hex key wrench through the trigger valve bore and into the master piston assembly (see Fig. 1.5.11).



FIG. 1.5.11

B. Insert the Jacobs master piston holding wedge between the master piston and exhaust rocker adjusting screw. Push the wedge in until the master piston bottoms in its bore (see Fig. 1,5.12). This will prevent the master piston from turning while the trigger adjustment is being made.

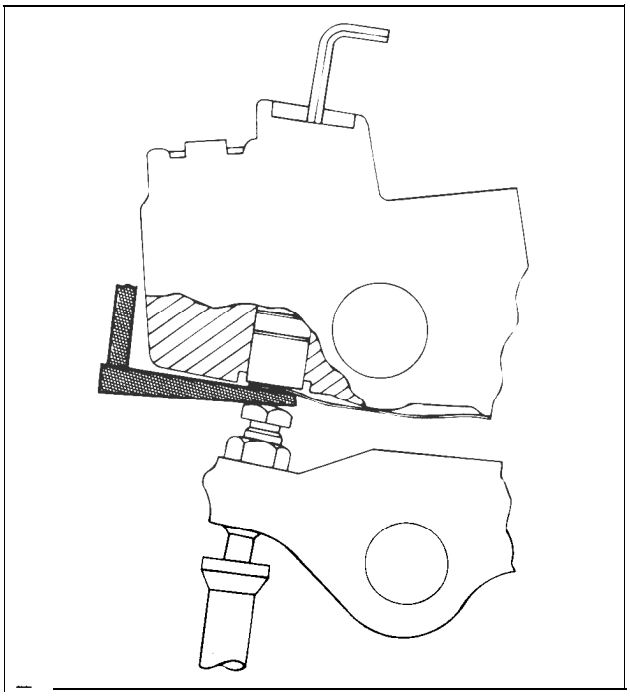

FIG. 1.5.8

C. Push down on the hex key wrench. This unlocks the adjusting screw from the hex pin (see Figs. 1.5.13 and 1.5.14, next page).

D. Refer to the original recorded travel found in Step 4 on previous page and adjust by pressing the hex key wrench against spring pressure. Maintain pressure while turning clockwise to decrease indicator travel or counterclockwise to increase indicator travel. Each hex (60°) equals approximately 0.005" indicator (trigger) travel.

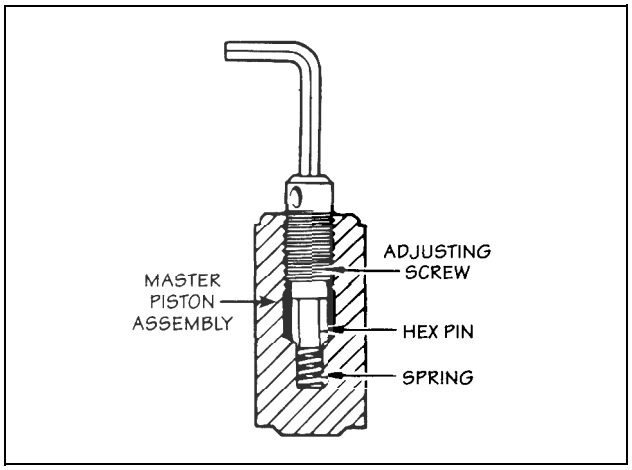

FIG. 1.5.13

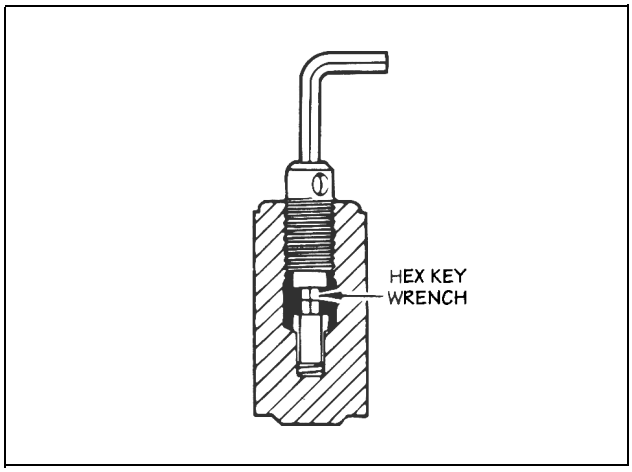

FIG. 1.5.14

E. Remove the hex key wrench. The adjusting screw must be locked. If the adjusting screw is not locked (screw can turn), rotate the screw slightly until the hex pin snaps into the adjusting screw. The screw is now locked in position.

⚠ CAUTION

SPRING PRESSURE ON THE HEX PIN SHOULD LOCK THE ADJUSTING SCREW IN POSITION WHEN PRESSURE ON THE HEX KEY WRENCH IS REMOVED. IF THE SCREW IS NOT LOCKED, THE ADJUSTMENT CAN CHANGE AND POSSIBLE ENGINE OR ENGINE BRAKE DAMAGE CAN RESULT.

Reinstall dial indicator assembly. Recheck trigger travel by rotating engine crankshaft back and forth. Repeat setting procedure, if necessary.

F. Replace trigger spring and cap. Tighten cap to 35 lb.-ft. (47 N•m).

G. Continue adjustment of remaining cylinders in the engine firing order. Recheck torque on all six trigger caps.

Models 317D/317E

The Model 317D Jake Brake engine retarder has been designed and approved for use on pre-1991 and 1991 model year 3176 Caterpillar engines. The Model 317D replaces Models C317, C317A and 317B.

The Model 317E Jake Brake engine retarder has been designed and approved for use on 1992 and later 3176 engine applications. The Model 317E replaces the Model 317C.

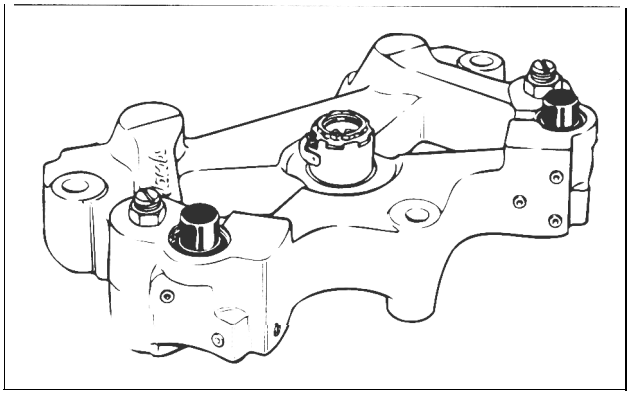

FIG. 1.5.15

Power-Lash®

To ensure optimum exhaust valve opening during engine brake operation, a Power-Lash assembly is incorporated in the slave piston adjusting screw.

A. The hole in the slave piston is sealed by a plunger in the Power-Lash. A spring holds the plunger extended for the desired travel of the slave piston (Fig. A, next page).

B. When the desired travel of the slave piston and exhaust valve opening is achieved, the hole is uncovered and the high pressure oil escapes to the area below the control valve (Fig. B).

C. The control valve moves up, compressing the stop (large) spring, providing a small volume of "stored" oil, ready for the next engine brake cycle. The reduced oil pressure allows the slave piston to return to its starting position, against the slave" piston screw (Fig. C).

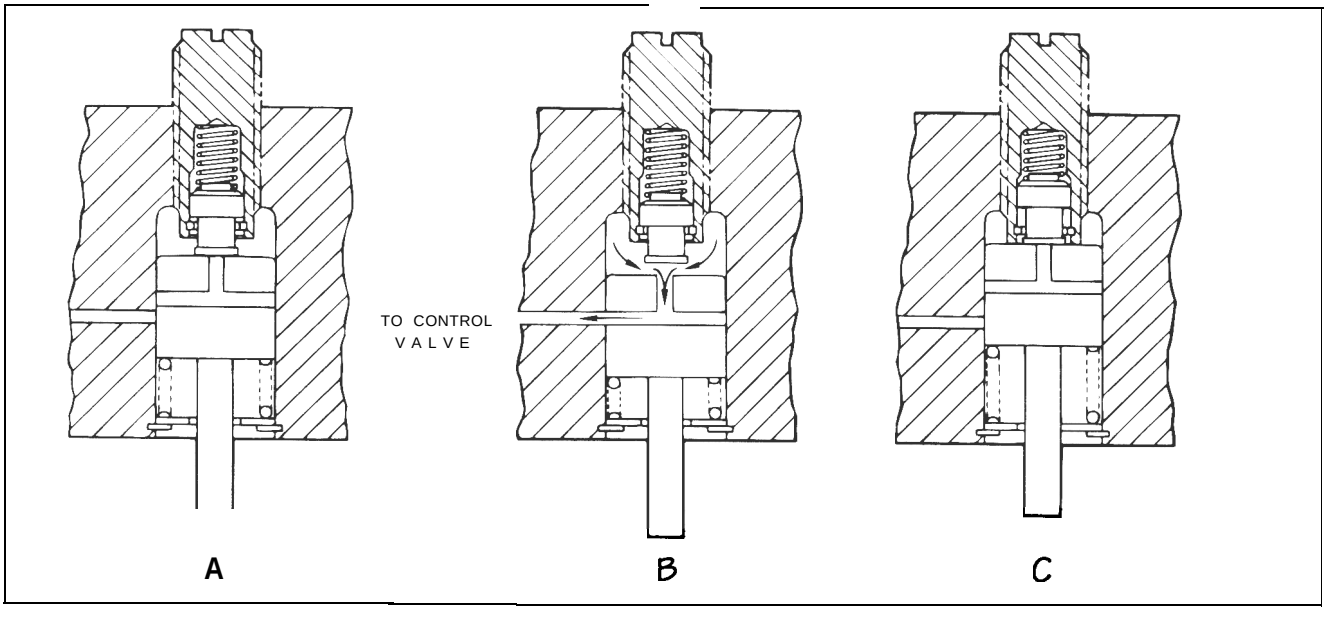

FIG. 1.5.16

Housing Assembly Differences

Models C317/C317A/317B/317C

Mounting methods for the C317 and C317A housings are different because of the height difference shown in Figs. 1.5.17 and 1.5.18. See brake housing installation section for specific installation procedures.

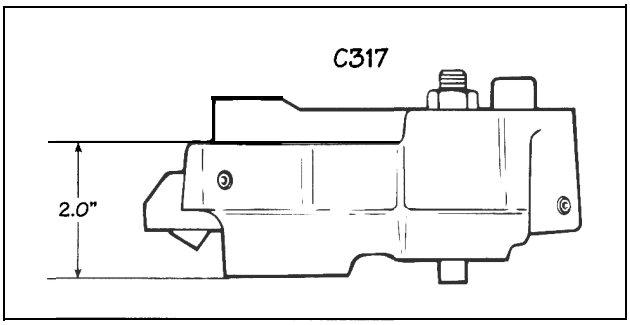

FIG. 1.5.17

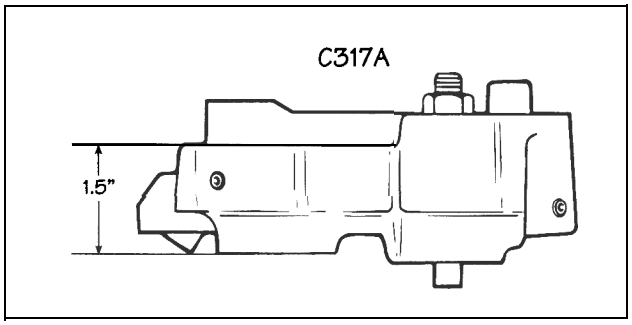

FIG. 1.5.18

The clip valve, P/N 014811, originally used with the C317 and C317A housings has been superseded by the Power-Lash™ assembly. For proper part numbers for the Power-Lash for Models C317, C317A, 317B and 317C, refer to Jacobs current parts manuals and service literature. Part numbers are located on the top of the screw body.

The master piston assembly for Models C317 and C317A is shown in Fig. 1.5.19, with the master piston assembly for Models 317B and 317C shown in the inset. Master pistons and housings are not interchangeable.

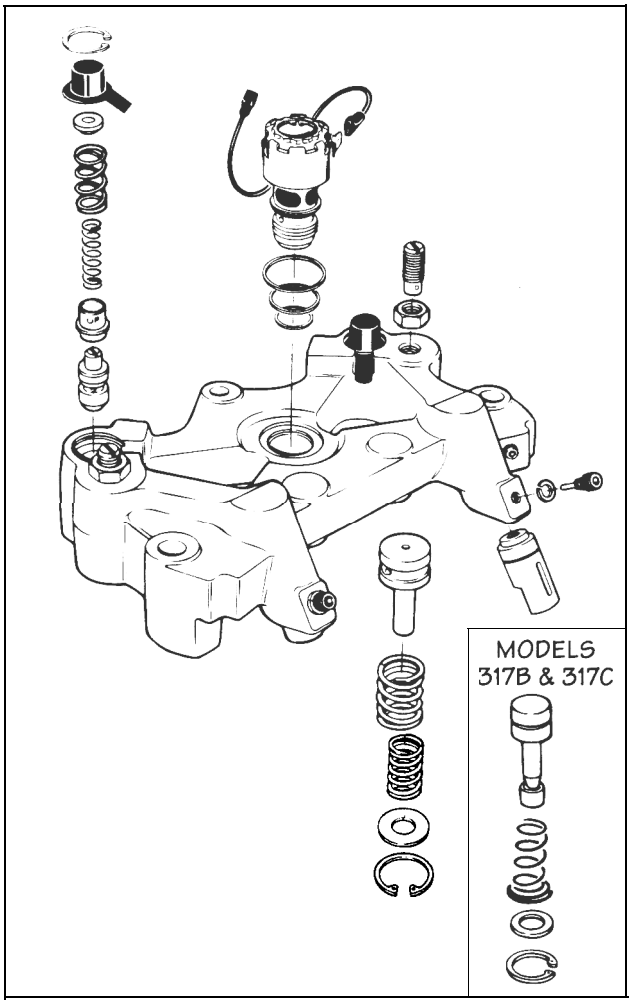

FIG. 1.5.19

Model C317 Only

NOTE:

THE FOLLOWING SIX STEPS APPLY TO MODEL C317 HOUSINGS ONLY AND NOT TO THE C317A

The extended stud, P/N 016088, has been replaced by bolt, P/N 014800. It is recommended that when servicing or installing the C317 engine brake, the extended stud, P/N 016088, be replaced by bolt, P/N 014800. Use the following procedure for C317 housing installation.

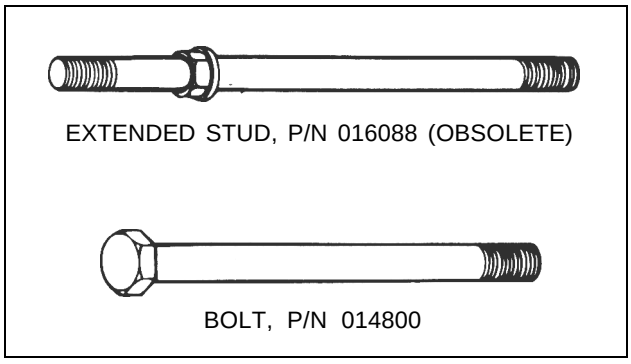

FIG. 1.5.20

NOTE:

TO ADJUST THE INJECTORS AND VALVES, THE ENGINE BRAKE HOUSINGS MUST BE REMOVED AND THE ROCKER ASSEMBLY SECURED WITH CATERPILLAR ROCKER PEDESTAL CAPSCREWS OR JACOBS P/N 014600 CAPSCREW WITH 2" SPACERS, JACOBS P/N 017535. TORQUE TO 70 LB.-IT. (9 N•M).



FIG. 1.5.21

1. After injectors and valves have been adjusted, remove the extended studs, or for new installations, remove the Caterpillar rocker pedestal capscrews.
2. Install the engine brake housing on the rocker pedestals.
3. Install the Jacobs bolt P/N 014800 (2 per housing) into the housing and rocker pedestals.
4. Install the Jacobs bolt through the housing into the spacer on the cylinder head bolt.
5. Tighten bolt at the rocker pedestals to 70 lb.-ft. (95 N•m).
6. Tighten the bolt at the head bolt spacer to 41 lb.-ft. (55 N•m).

For Models C317A/317B/317C

Install the mounting stud assemblies in the rocker brackets and torque to 70 lb.-ft. (95 N•m). Adjust the injectors and valves per Caterpillar specifications.

Adjust the engine brake slave piston clearance with the valves closed to the clearance shown below:

Slave Piston Adjustment

For correct slave piston adjustment procedures and settings, refer to specific installation manual and current service publications.

Mounting Studs

The current mounting stud used with Model C336 and 336A housings is P/N 017156 (see Fig. 1.5.22). Bolt, P/N 016895, and spacer, P/N 012804, was previously used with the Model C336. P/N 016895 and 012804 are available as service parts.

Stud, P/N 016809, formerly used with the Model C336, has been superseded by stud, P/N017156.

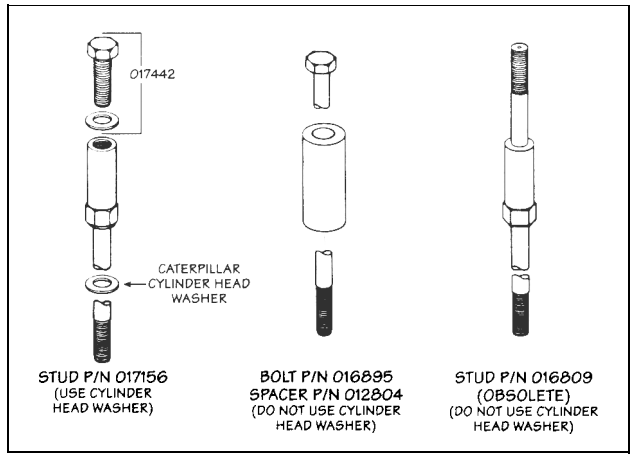

FIG. 1.5.22

Models C336/336A

The Model C336 Jake Brake Engine Brake is approved for use on Caterpillar 3306B engines with serial numbers greater than 63Z3300 and 3306 engines with serial numbers greater than 76R6115.

The Model 336A Jake Brake Engine Brake is approved for use on Caterpillar 3306C engines with serial number 7RJO0116 or greater and Caterpillar 3306C engines with a serial number prefix of 9TL.

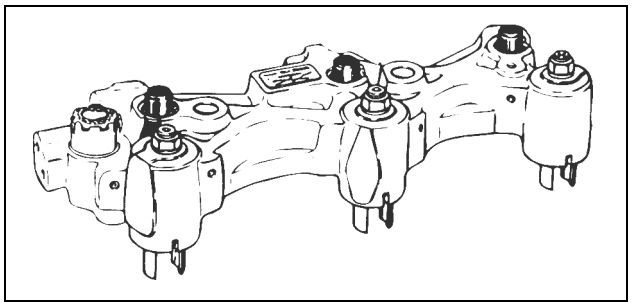

FIG. 1.5.23

Master-Slave Circuit Relationship Listed in Engine Firing Order

Location of Master Piston	Location of Slave Piston
Actuates	
No. 1 Pushrod	No. 3 Exhaust Valve
No. 5 Pushrod	No. 6 Exhaust Valve
No. 3 Pushrod	No. 2 Exhaust Valve
No. 6 Pushrod	No. 4 Exhaust Valve
No. 2 Pushrod	No. 1 Exhaust Valve
No. 4 Pushrod	No. 5 Exhaust Valve

CHART 5

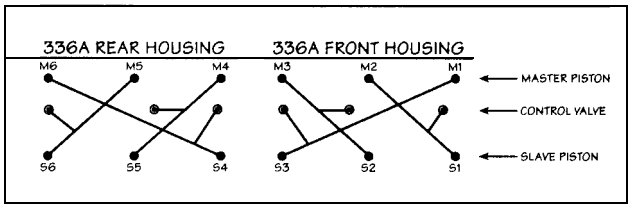

CHART 6

Exhaust Valve Stem Caps

The valve cap shown in Fig. 1.5.24 is currently used for Models C336 and 336A engine brakes. It can be used as a replacement part, when necessary, for the former cap used with the Model C336. The valve cap shown in Fig. 1.5.25 was previously used in the Model C336 engine brake

⚠ CAUTION

THE VALVE CAP SHOWN IN FIG. 1.5.25 MUST NOT BE USED IN MODEL 336A ENGINE BRAKES. SERIOUS ENGINE DAMAGE MAY RESULT.

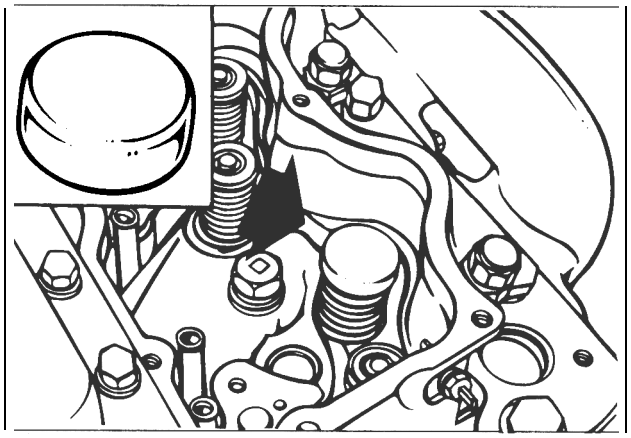

FIG. 1.5.24

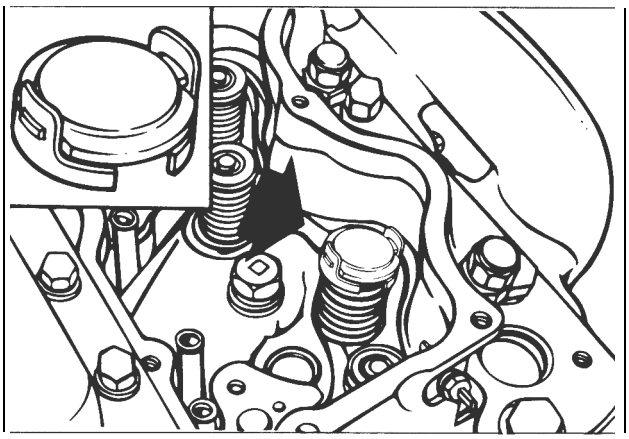

FIG. 1.5.25

Slave Piston Clearance Settings

Model C336 only:

The C336 uses the adjusting gage shown in Fig. 1.5.26. See Installation Manual and current sewice publications for slave piston clearance setting.

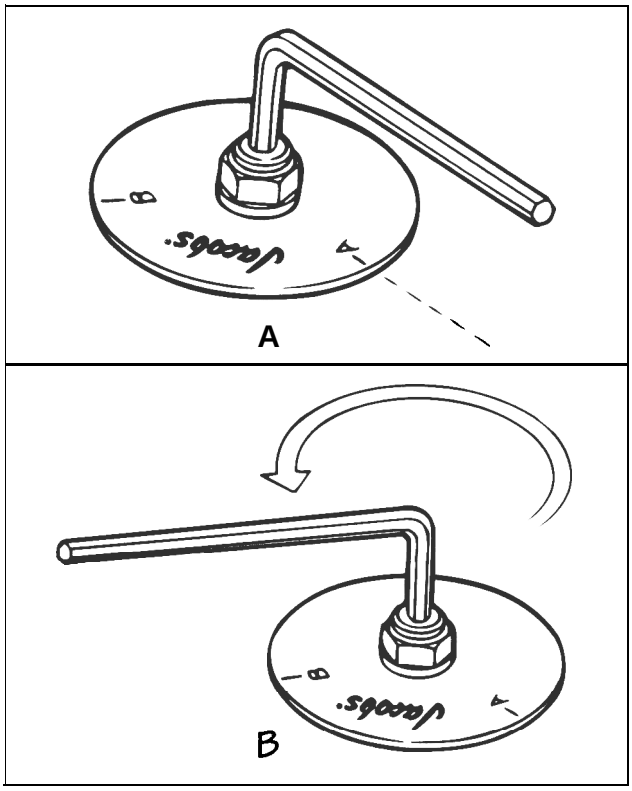

FIG. 1.5.26

Model 336A only:

Place the Jacobs lash adjusting gage (refer to the current installation manuals for proper slave piston clearance setling) between the valve cap and slave piston foot (see Fig. 1.5.27).

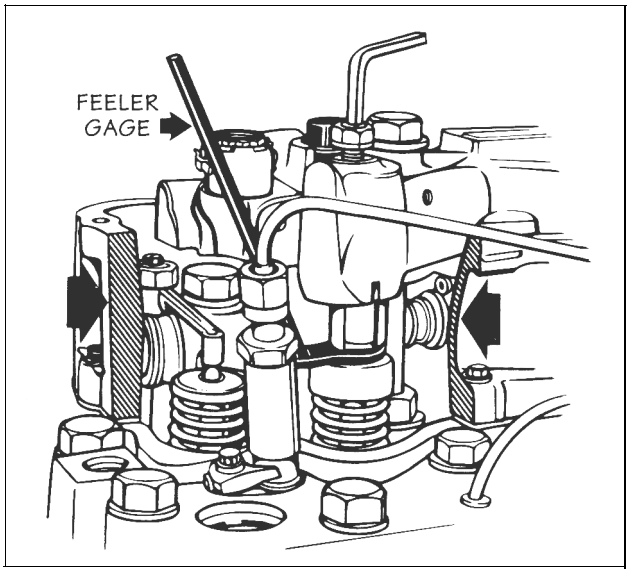

FIG. 1.5.27

CAUTION

BE SURE THAT THE FEELER GAGE IS FULLY ENGAGED UNDER BOTH SLAVE PISTON FEET (SEE FIG. 1.5.28). FAILURE TO PROPERLY USE TOOL MAY RESULT IN INCORRECT SLAVE LASH WHICH WILL LEAD TO POOR PERFORMANCE AND/OR ENGINE/ENGINE BRAKE DAMAGE.

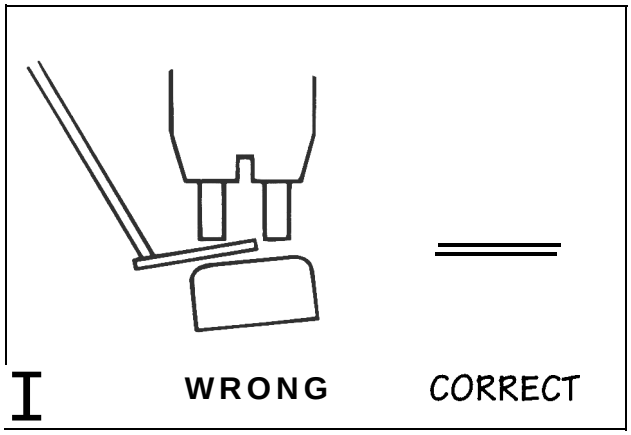

FIG. 1.5.28

Turn the adjusting screw clockwise until a slight drag is detected. Hold screw in this position and tighten locknut to 25 lb.-ft. (35 N•m).

NOTES

1.6 Engine Brakes for Detroit Diesel Engines

General Application Information

- 71A/92A (Fig. 1.6.1): used on all 4, 6, 8, 12 and 16 cylinder engines whether naturally aspirated, turbocharged, TA or TTA engines

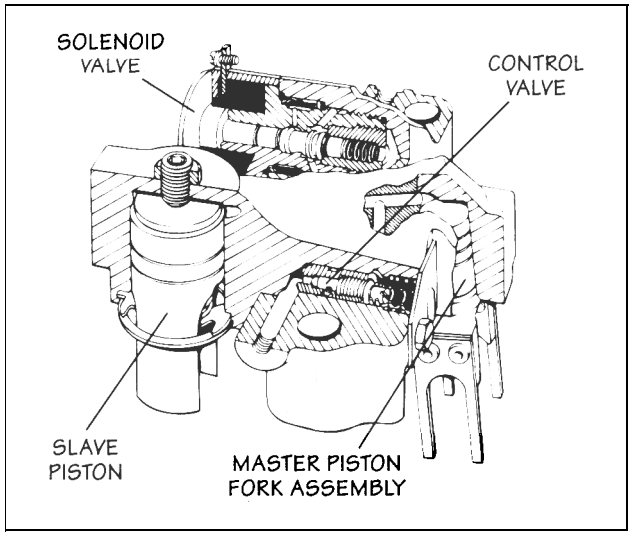

FIG. 1.6.1

- 53A (Fig. 1.6.2): Used on the following Detroit Diesel Engine Models: 3-53,4-53, 6V-53, 8V-53

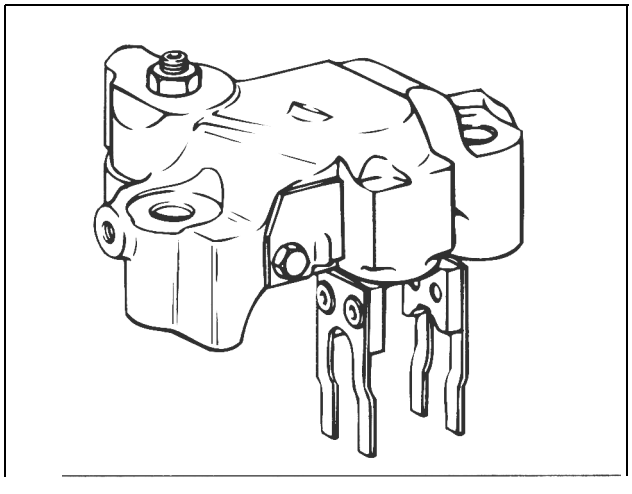

FIG. 1.6.2

Adjustment of Engine Brake Slave Pistons

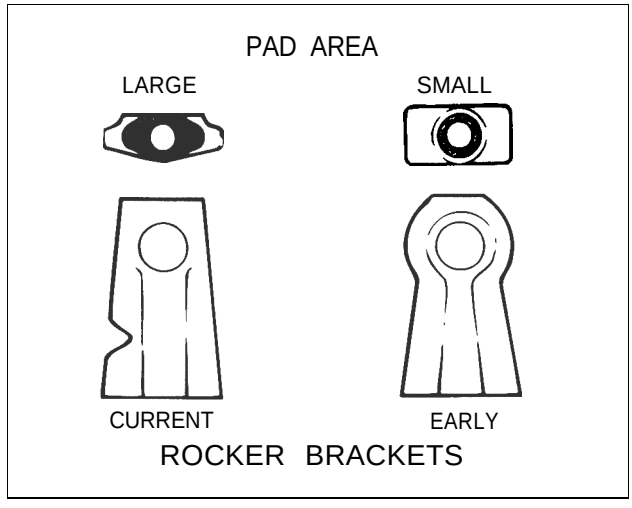

FIG. 1.6.3

CAUTION

FOLLOW ENGINE BRAKE ADJUSTMENT PROCEDURES CAREFULLY TO PREVENT ENGINE DAMAGE BY PISTON TO VALVE CONTACT. BEFORE MAKING SLAVE PISTON ADJUSTMENTS, MAKE SURE EXHAUST VALVES ARE CLOSED AND INJECTOR IS IN THE DELIVERY POSITION.

Slave Piston Settings: Model 7l/92A

Slave piston clearance must be set according to type of housing and rocker brackets. See Fig. 1.6.3. Refer to the following chart:

Housing/Bracket Type	Slave Piston Setting
Rocker Brackets with large pad area and 71A/92A engine brake housings	0.059"
All other combinations of brackets and housings	0.064"

⚠ CAUTION

DO NOT USE THE 0.059" SETTING WITH THE FORMER DETROIT DIESEL ROCKER BRACKETS OR WITH THE EARLIER MODEL 71/92 ENGINE BRAKE. ENGINE OR ENGINE BRAKE FAILURES WILL RESULT. THOSE APPLICATIONS MUST CONTINUE TO USE THE 0.064 INCH SLAVE PISTON SETTING.

Slave Piston Adjustment: Model 53A

The Model 53A slave piston adjustment is done by a turns method. See the Model 53A Installation Manual for procedures.

Special Features/ Procedures

Exhaust Valve Bridges

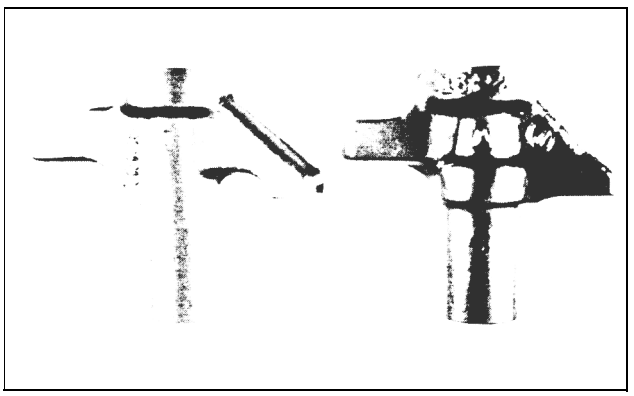

FIG. 1.6.4

The differences in the profile shape and the distance between valve stem contact points for Models 71A and 92A engine brake bridges can be seen in Fig. 1.6.4. Models 71A and 92A engine brake kits are identical except for bridge differences.

DDEC Fuel Pipes

DDEC fuel pipes (Fig. 1.6.5) must be removed prior to engine brake housing removal. Check fuel pipes for damage especially at the fitting area and replace if necessary. Fuel pipes may be reused if in good condition

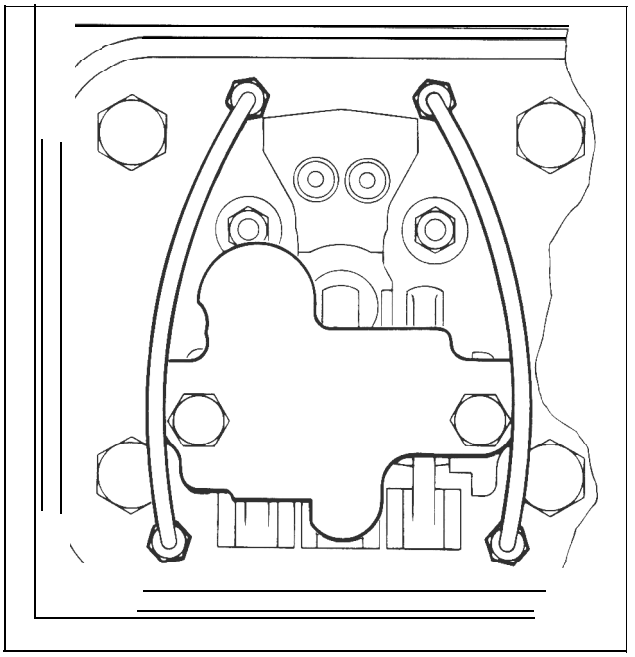

FIG. 1.6.5

Fuel Pipes - Non DDEC Engines

The former flare type fuel pipes (Fig. 1.6.6) are not reusable. New O-ring style fuel pipes with attaching parts, must be installed in place of the flare type fuel pipes.

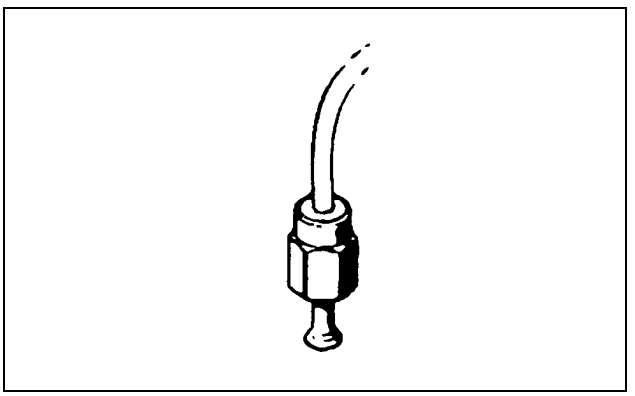

FIG. 1.6.6

Fuel Pipe Installation

NOTE:

IT IS NECESSARY TO REMOVE INJECTORS WHICH HAVE BEEN OPERATED IN AN ENGINE BEFORE REPLACING FILTER CAPS.

Non-DDEC Engines

Replace flare style fuel pipes with O-ring style fuel pipes. In the following instructions, numbers in parentheses refer to Fig. 1.6.7 and Fig. 1.6.8.

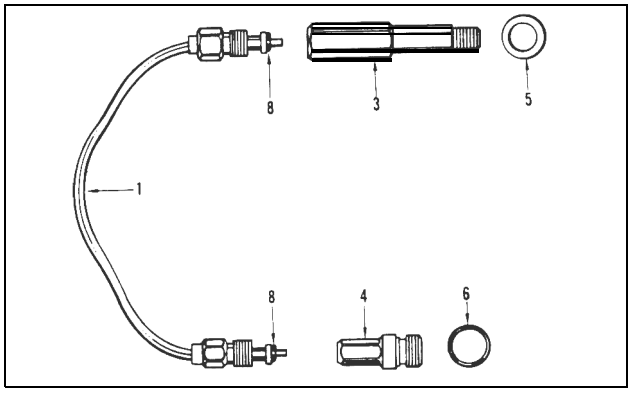

FIG. 1.6.7

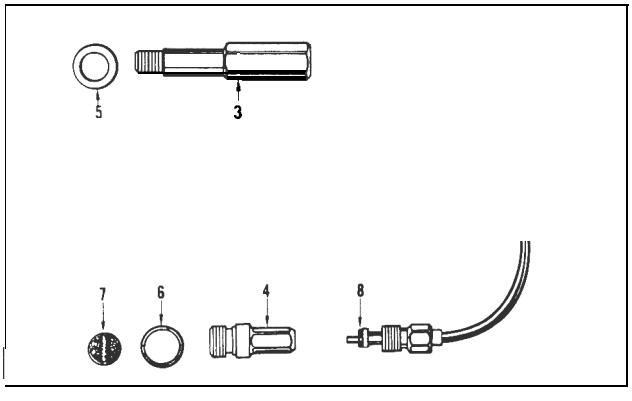

FIG. 1.6.8

1. Remove injectors according to instructions in the DDC engine service manual. Remove fuel connectors from cylinder head.
2. Install the new connectors (3) with washers (5) into the cylinder head (2 per cylinder) (see Fig. 1.6.9). Torque the connectors to 40 - 45 lb.-ft. (54 - 61 N•m).

FIG. 1.6.6

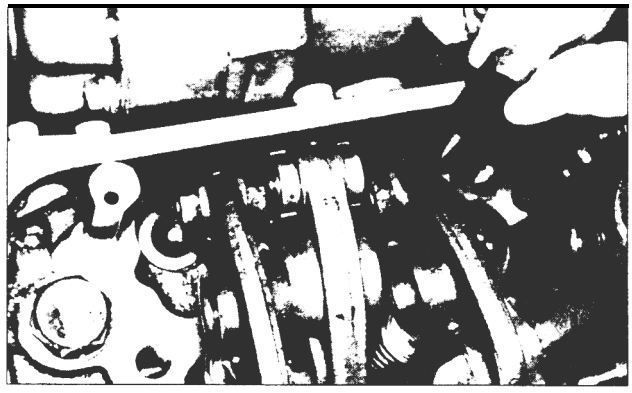

FIG. 1.6.9

3. Remove injector filter caps, washers, gaskets/fuel inlet filters.
4. Install the new filter (7) into the inlet port of the injector, grooved side up. The injector inlet port is located above the control rack (see Fig. 1.6.10).

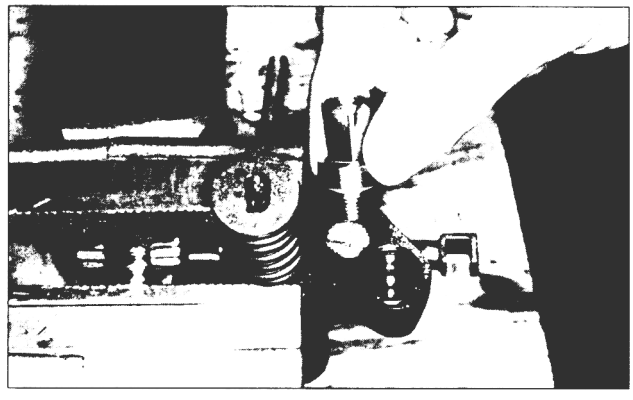

FIG. 1.6.10

5. Install the new fuel injector caps (4) and gaskets (6) into the inlet and return ports of the injector. Torque the caps to 60 - 70 lb.-ft. (82 - 95 N•m). Use a deep well socket and torque wrench.
6. Install and adjust the fuel injectors according to instructions in the DDC engine service manual.
7. Remove the protective caps from the fuel pipes.

NOTE:

THE O-RINGS (8) MUST BE INSTALLED ON THE FUEL PIPES.

8. Lubricate the O-rings with clean lube oil and install the short (inlet) (2) and long (return) (1) fuel pipes.

⚠ CAUTION

SET THE PIPE ENDS INTO THE FITTINGS. HAND TIGHTEN THE FUEL PIPE NUTS. DO NOT BEND FUEL PIPES (SEE FIG 1.6.11). IF THE CONNECTIONS DO NOT FIT EASILY INTO THE FITTINGS OR, IF THERE IS INTERFERENCE WITH THE ENGINE BRAKE HOUSING, REPLACE THE FUEL PIPES. BENDING THE FUEL PIPES MAY RESULT IN FUEL LEAKAGE AND SEVERE ENGINE DAMAGE.

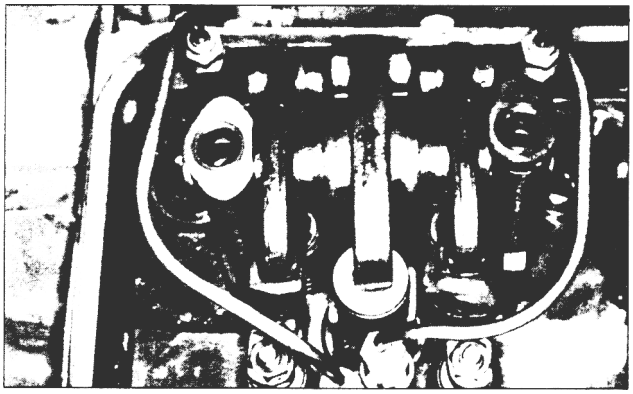

FIG. 1.6.11

9. Torque the fuel pipe nuts to 160-200 lb.-in. (18 - 23 N•m) using a fuel pipe nut socket and torque wrench.

Fast Idle Buffer Switch

This type of switch is installed to retain the fast idle feature and automatic engine brake operation.

Follow the standard buffer screw plunger and switch assembly installation.

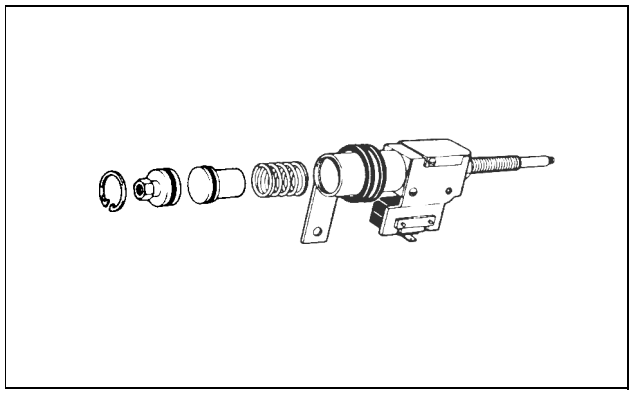

FIG. 1.6.12

1. Attach the fast idle switch assembly to the buffer screw attaching nut.
2. Adjust the switch bracket clamp to line up with the Detroit Diesel housing-to-blower bolt (Fig. 1.6.13).

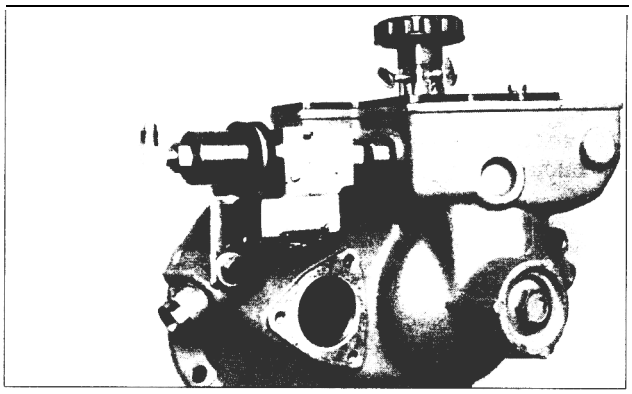

FIG. 1.6.13

3. Remove the bolt and washer and secure the switch by placing the mounting bracket between the washer and bolt.
4. Tighten the bolt and clamp.
5. Install the air tube elbow into the inlet plug and attach the air tube between the elbow and the fast idle limiting air cylinder on top of the governor housing.

With the fast idle buffer switch properly installed, the engine brake will operate only during deceleration and will automatically shut off when fast idle activation occurs.

Oil Connectors

Poor performance problems may be caused by improperly installed or broken oil connectors. Pay particular attention to this area during troubleshooting.

1. Reposition the seal ring in the head of the oil connector to make sure it fits into the recessed hex head of the connector screw (Fig. 1.6.14).

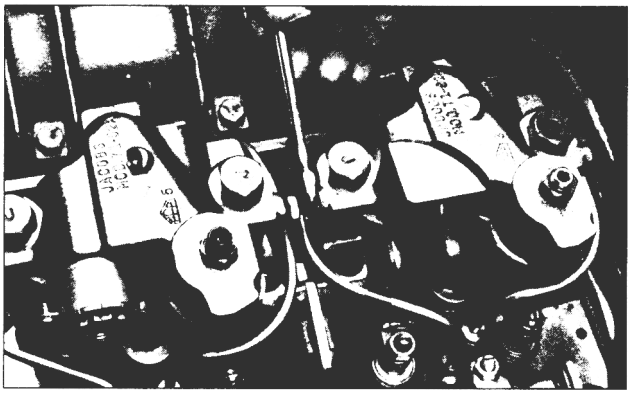

FIG. 1.6.14

4. Hold the oil connector in this position and carefully lock the lock nut. Use two short open end wrenches (Fig. 1.6.15). Remember, too much torque on these connectors will cause them to crack.



FIG. 1.6.15

Clevis for Injector Rocker Lever

In 1978, Detroit Diesel began using a larger clevis for the injector rocker lever. This clevis and the standard Jacobs fork assembly made an overall height greater than acceptable. Interference with the bottom of the engine brake housing could be damaging and an engine brake power loss could result.

When installing an older engine brake on a new engine or using older spare parts, special attention must be given in this area. The current fork assembly, P/N 003337, and spring, P/N 009505, can be used on both the high and standard clevises. It is **strongly recommended** that old housings be updated to the P/N 003337 fork and P/N 009505 spring combination.

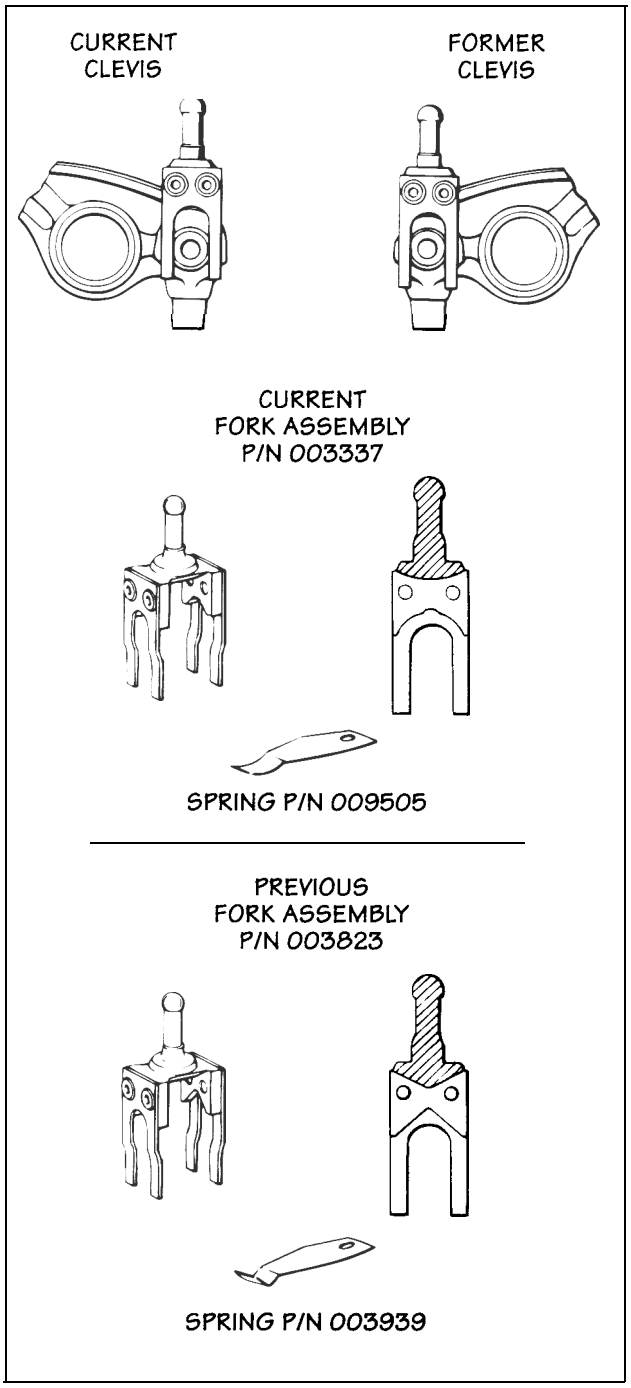

FIG. 1.6.16

Two-Valve Head

Detroit Diesel also makes a two-valve cylinder head design. For this design, the Jacobs exhaust bridge is replaced with a Jacobs valve stem cap.

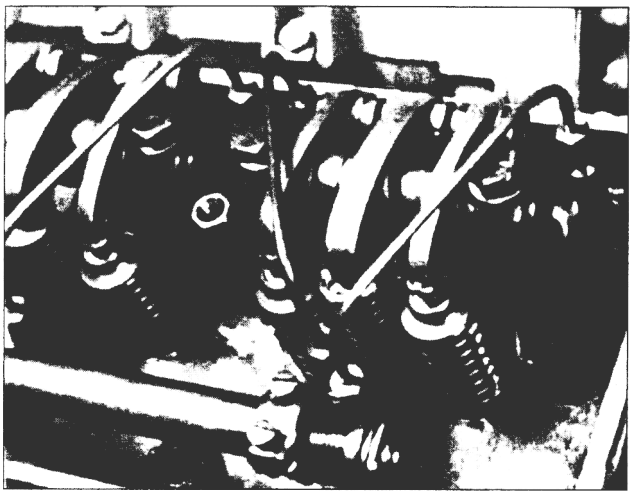

FIG. 1.6.17

1. On engines equipped with high mount injector clamps, remove the clamp by removing the bolt and special washer. Replace with a Jacobs high mount clamp and use the same washer and bolt (Fig. 1.6.18). Tighten the bolt to 25 lb.-ft. (35 NŽm). The Jacobs clamp can be identified by a small milled section on one side. This provides clearance for the exhaust valve stem cap.

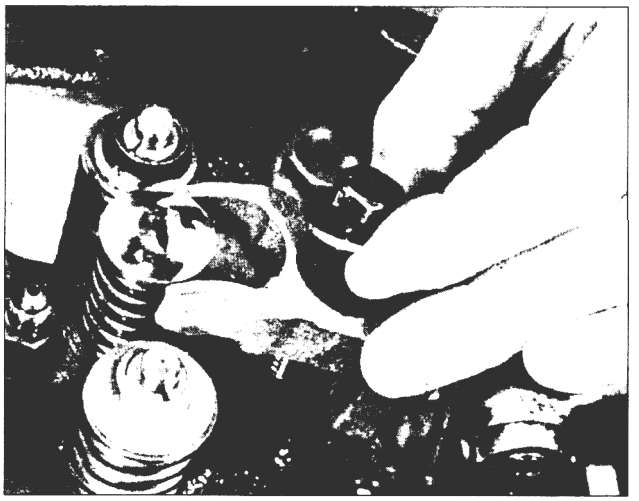

FIG. 1.6.18

2. Install Jacobs valve stem caps on right-hand exhaust valves (one per cylinder) (Fig. 1.6.19). Press caps firmly over valve springs. Hexagon cover studs must be removed if located near this valve.

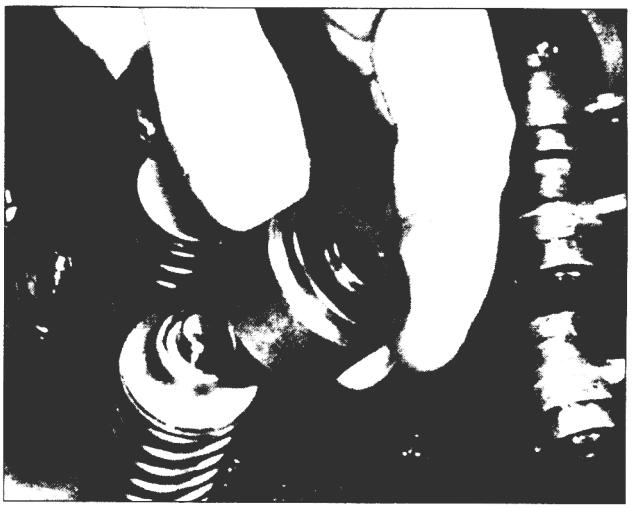

FIG. 1.6.19

3. Using the Jacobs clamping tool, back off the thumb screw. Install the tool squarely over the valve stem cap with its feet under the exposed coil of the valve spring (Fig. 1.6.20). Tighten the thumb screw to seat the cap. Remove the tool.

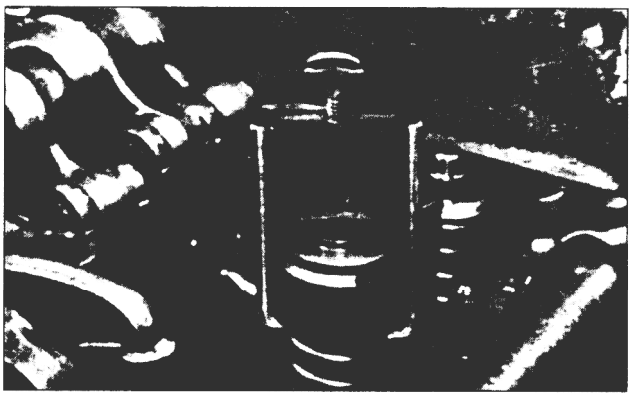

FIG. 1.6.20

Models 760/760A/765 Engine Brakes

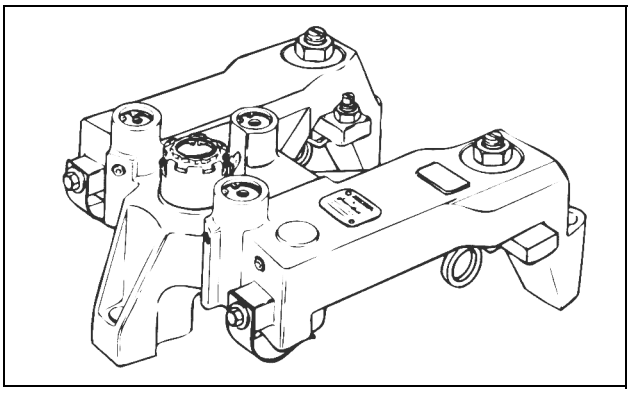

FIG. 1.6.21

Engine Identification

Engine model identification is on the name tag located on the side of the valve cover and stamped on the cylinder block beneath the intake manifold.

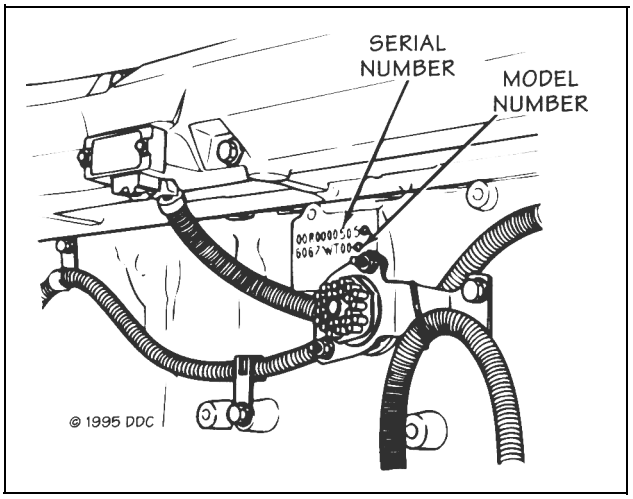

FIG. 1.6.22

A “G” is the model number indicates 12.7 liter displacement; a “W” indicates 11.1 liter displacement. See the typical model number below:

6 0 6 7 **G** U **6 0**

Displacement	Model Year
G = 12.7	40 = Pre 1991
W = 11.1	60 = 1991 and later
	28 = 1991 and later (Coach)

Application Information

Model No.	Model Year	Application	Jake Brake Model
6067WU40	Pre’91	Truck	760A
6067GU40	Pre’91	Truck	760A
6067WU60	’91 & later	Truck	760A
6067GU60	‘91 & later	Truck	765
6067GU28	‘91 & later	Coach	765
6067GU91	‘91 & later	Military	765
6067WK60	‘91 & later	Truck	760A
6067GK60	‘91 & later	Truck	765
6067GK28	’91 & later	Coach	765

Slave Piston Adjustment

Models 760/760A/765 require a single-blade feeler gauge for slave piston adjustment. For correct adjustment procedures, clearance settings and feeler gauge part numbers, see Jacobs installation and parts manuals and service publications.

Housing Mounting Bolts

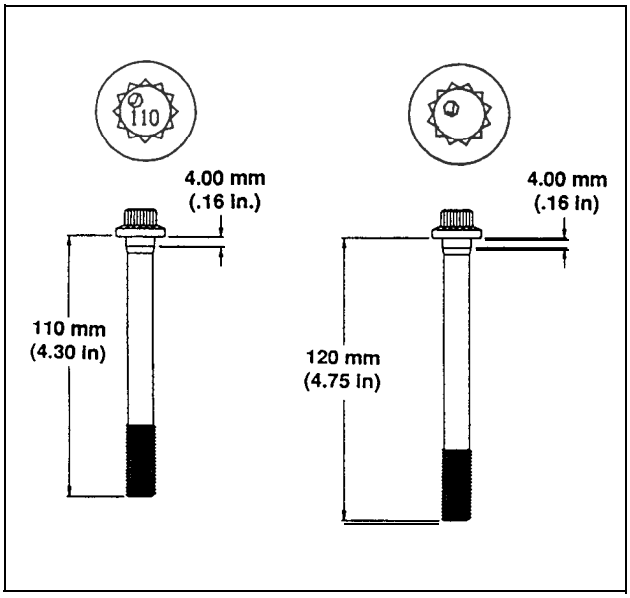

FIG. 1.6.23

CAUTION

IT IS IMPERATIVE THAT THE CORRECT JACOBS BOLTS BE USED FOR THE ENGINE BRAKE HOUSING BEING INSTALLED. INSTALLATION OF INCORRECT BOLTS WILL RESULT IN ENGINE AND ENGINE BRAKE DAMAGE.

Model 760: Use one 120 mm bolt, P/N 012995, and two 110 mm bolts, P/N 016345, for each housing.

Models 760A and 765: Use three 110 mm bolts, P/N 016345, for each housing.

Follow the instructions in the Installation Manual, P/N 014328, for correct application and torque information.

The Detroit Diesel rocker arm shaft bolt used on Series 60 engines has a shoulder that is much longer than the Jacobs bolt and has the logo (spinning arrows) and vendor ID (F-C) on its head (see Fig. 1.6.24). This bolt MUST NOT be used for the engine brake housing hold down.

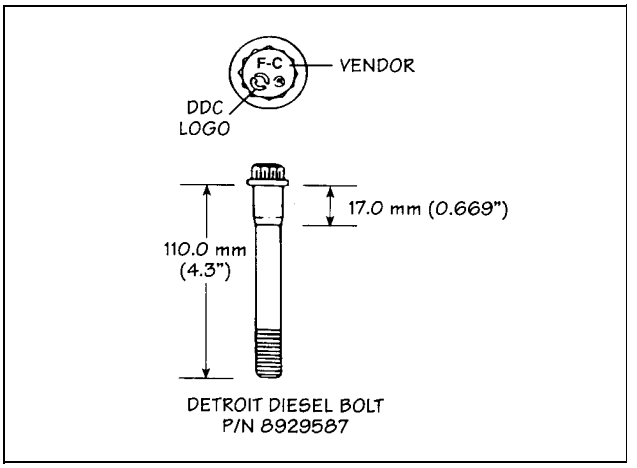

FIG. 1.6.24

CAUTION

IF THE DETROIT DIESEL BOLT IS MISTAKENLY USED FOR ENGINE BRAKE HOLD DOWN, THE LONGER SHOULDER ON THE BOLT WILL RESTRICT OIL SUPPLY TO THE HOUSING AND PREVENT PROPER BRAKE OPERATION.

Ball Check Valve (Model 760 Only)

Remove the plug to remove the ball check valve and spring, Inspect parts for wear or damage and replace, if necessary. Reinstall the parts in the proper sequence (see Fig. 1.6.25).

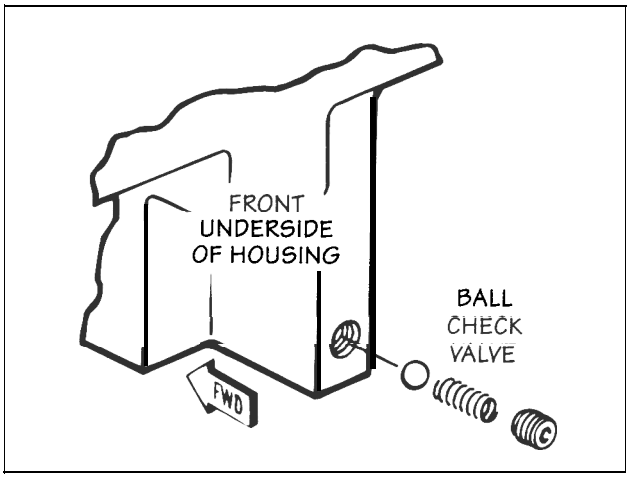

FIG. 1.6.25

1.7 Engine Brakes for Mack Engines

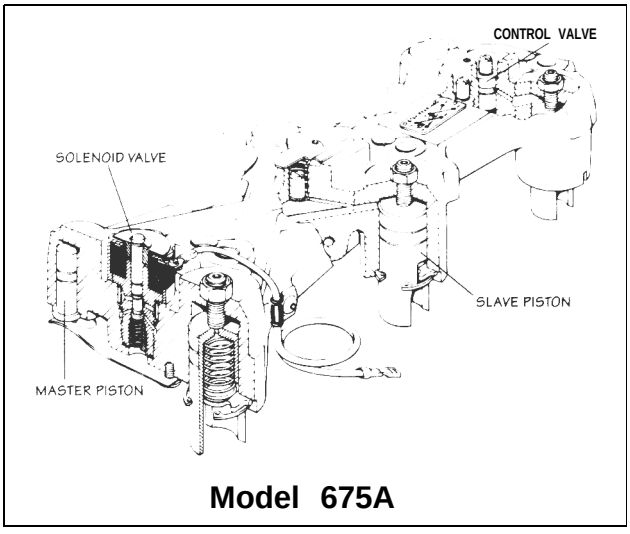

Model 675A

FIG. 1.7.1

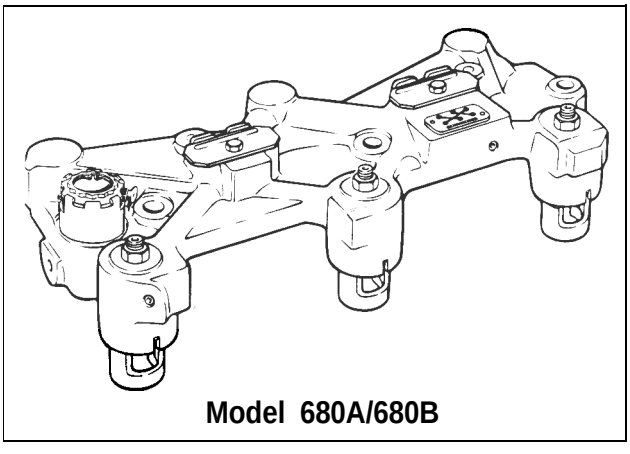

Model 680A/680B

FIG. 1.7.2

General Application Information

The Model 680B Jake Brake engine retarder is designed and approved for use on Mack E7 engines.

The Model 680A Jake Brake engine retarder is designed and approved for use on Mack E6 engines with four-valve cylinder head configuration.

The Model 675A Jake Brake engine retarder is designed and approved for use on all Mack 6 cylinder 672 and 711 CID automotive engines: E6, EC6, EM6 and EMC6. The Model 675A replaces the Model 675 in the Jacobs engine brake product line.

Special Features/ Procedures

Valve Stem Caps: Models 675 and 675A

NOTE:

IATER PRODUCTION ENGINES HAVE 0.345" (11.1 MM) DIAMETER VALVE STEMS. USE JACOBS VALVE STEM CAP, P/N 009263, ON THESE ENGINES. MACK ENGINES WITH SERIAL NUMBERS BELOW 9V6755 CAN HAVE LARGER DIAMETER EXHAUST VALVE STEMS, 0.486" (1 2.3 MM). JACOBS VALVE STEM CAP, P/N 002032, MUST BE USED ON THESE EARLIER ENGINES.

Place the Jacobs valve stem caps on top of each exhaust valve.



FIG. 1.7.3

Slave Piston Adjusting Screw

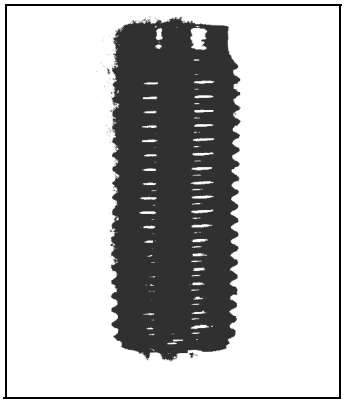

FIG. 1.7.4

NOTE:

EARLY MODEL 675A PRODUCTION HOUSINGS (S/N B-370476 AND LOWER) AND ALL 675 HOUSINGS USE SOLID ADJUSTING SCREWS AND SLAVE PISTONS WITH NO HOLES.

MODEL 675A HOUSINGS (S/N B-370477 AND GREATER) HAVE ADJUSTING SCREWS WITH SPRING-LOADED PLUNGERS AND SLAVE PISTONS WITH HOLES

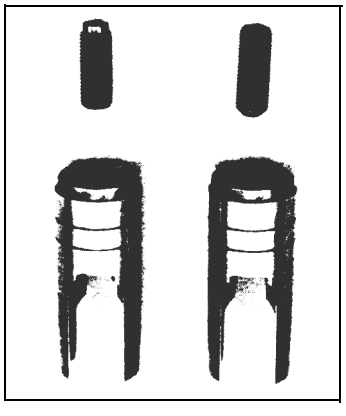

FIG. 1.7.5

⚠ CAUTION

ADJUSTING SCREWS AND SLAVE PISTONS MUST NOT BE INTERMIXED.

NOTE:

THE SPRING-LOADED PLUNGER IS DESIGNED TO PREVENT SLAVE PISTON OVERTRAVEL IN THE EVENT OF EXCESSIVE ENGINE OIL PRESSURE OR RESTRICTED SLAVE PISTON MOVEMENT.

Inspect the plastic plunger in the Model 675 adjusting screw. It should move freely in the screw. Clean or replace the entire screw if the plunger does not move freely.

Oil Supply Screw: Models 675 and 675A

NOTE:

ENGINES MANUFACTURED PRIOR TO MARCH, 1986, HAVE A 1 /4-20 THREADED HOLE FOR THE ROCKER SHAFT LOCKING SCREWS (SEE FIG. 1.7.6). THESE ENGINES REQUIRE JACOBS OIL SUPPLY SCREW, P/N 014043, AND WASHER, P/N 014104.

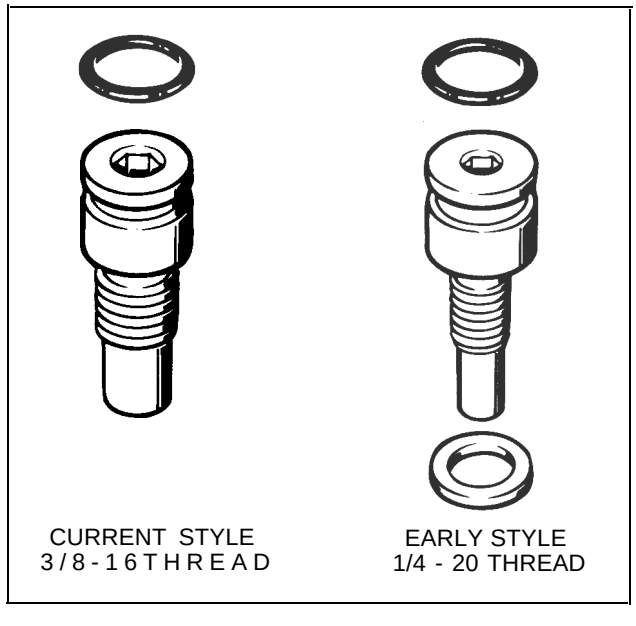

FIG. 1.7,6

Slave Piston Adjustment

Models 675 and 675A require a fork-type feeler gauge for slave piston to valve cap clearance setting. This is required to be sure the valve stem cap is level with the slave piston when adjustment is made.

For correct adjustment procedures, clearance settings and feeler gauge part numbers, see Jacobs' installation and parts manuals and service publications.

Exhaust Valve Yoke Replacement

Early Jacobs Model 680A/680B exhaust valve yokes have SAE threads. Current production yokes have metric threads. Be sure to use the correct screws and nuts for replacement parts.

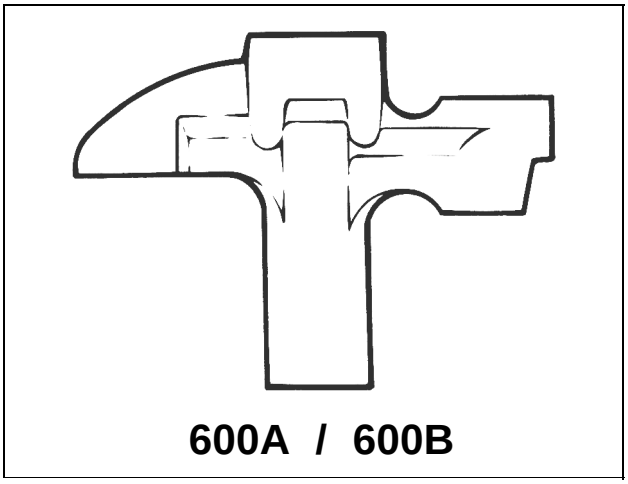

FIG. 1.7.7

NOTES

Section 2: Preventive Maintenance

Introduction

The Jacobs Engine Brake is typically a trouble-free device. However, inspections are necessary and some maintenance is required. The mileage and hours intervals presented here are intended as a guide for establishing a routine of lake Brake inspection and maintenance in conjunction with scheduled engine maintenance.

Severe driving conditions, types of roads and driving areas will affect the length of time between scheduled maintenance. Engines exposed to severe applications and operating environments may require more frequent preventive maintenance, thereby altering engine retarder maintenance intervals as well.

The Recommended Preventive Maintenance Schedule shown below is applicable to all engine brake models.

Recommended Preventive Maintenance Schedule

Part	12 Months 100,000 Miles 3,000 Hours	36 Months 300,000 Miles 9,000 Hours	60 Months 500,000 Miles 15,000 Hours
Wiring/Terminal Connections	I	I	I
Clutch/Throttle/Buffer	A	**A/R**	**A/R**
Safety Valve Screw Assembly	I	I	R
Solenoid Valves		I	R
Reset/Auto-Lash' Assembly		I	**I/R**
Crosshead/Bridges/Valve Stem Caps		I	**I/R**
Injector/Exhaust Rocker Arm Screws		I	**I/R**
Master Piston/Fork Assembly		I	**I/R**
Slave Pistons			I
External Hose Assembly		**I/R**	**I/R**
Housings		I	
Fuel Pipes		**I/R**	**I/R**
Hold-down Bolts		I	R
Accumulator Springs*		R	
Solenoid Harness*		R	**I/R**
Solenoid Seal Rings*		R	**I/R**
Control Valve Springs*		R	**I/R**
Control Valves*		R	**I/R**
Oil Seal Rings*	I	R	**I/R**
Master Piston Return Springs*	I	R	I
Terminal Lead Out*	I	R	I
Crosshead Pin Assembly*	I	R	I

I = inspect/correct as required **A** = Adjust **R** = Replace

* contained in tune-up kits

2.1 Inspection Criteria

Safety Valve Screw Assembly Inspection

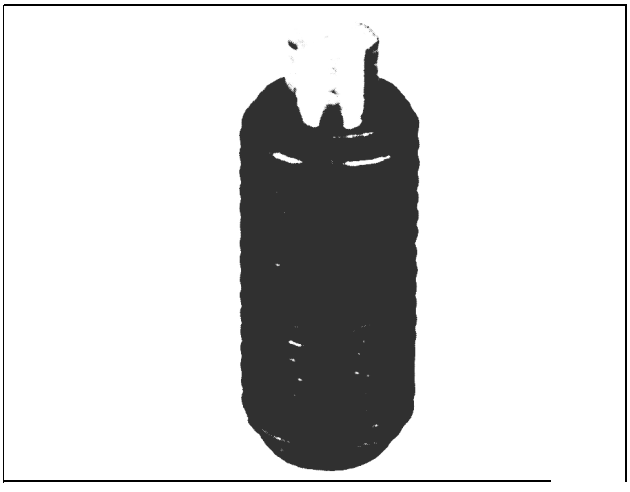

FIG. 2.1.1

1. Check the plunger in the safety valve screw. The plunger should protrude from the bottom of the screw, have light spring pressure apparent when depressed, and should move freely.
2. Inspect the area of the plunger which contacts the slave piston. The area should be flat and smooth.

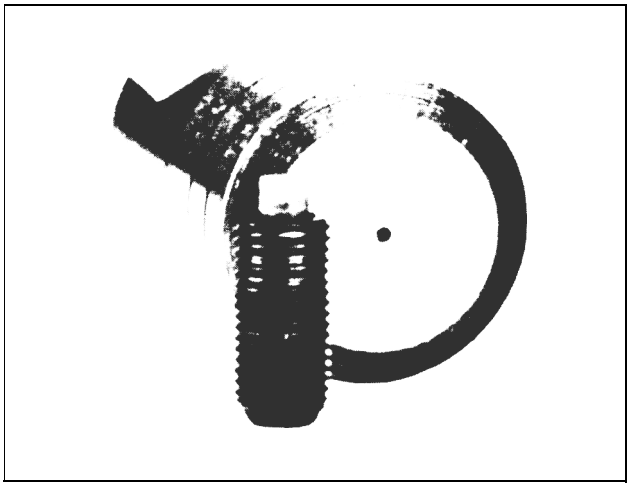

FIG. 2.1.2

3. Clean in an approved cleaning solvent and apply clean engine oil at reinstallation.
4. Ensure that the hole in the slave piston is visible through the threaded screw hole in the housing and aligns with the plunger.

NOTE:

THE SCREW ASSEMBLY CANNOT BE DISASSEMBLED IN THE FIELD.

Exhaust Crosshead/ Bridge or Valve Stem Cap Inspection

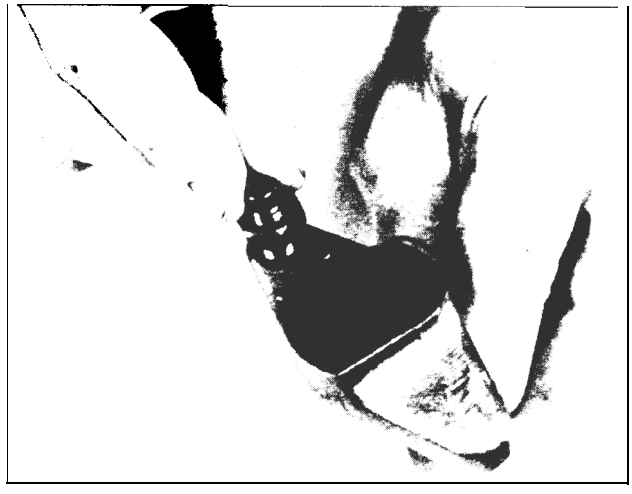

FIG. 2.1.3

1. Check the hardened surface on the Jacobs exhaust crosshead/bridge/valve stem cap for excessive wear at either the point of rocker lever contact or slave piston contact. If the wear is 0.004" deep or more, the crosshead/bridge/cap must be replaced.



FIG. 2.1.4

2. Inspect the area of the valve stem cap that surrounds the valve stem for cracks or excessive wear. If any of these defects are visible, replace the valve stem cap.

3. Check the crosshead/bridge bore and valve stem contact areas. Ensure that they comply with applicable engine manufacturer's service parameters.

Master Piston Inspection

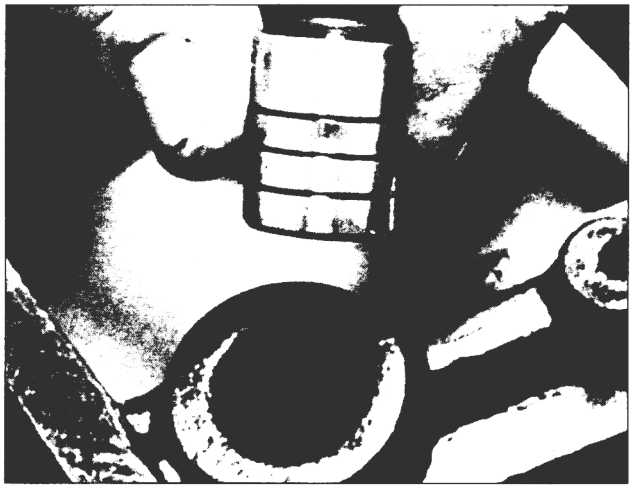

FIG. 2.1.5

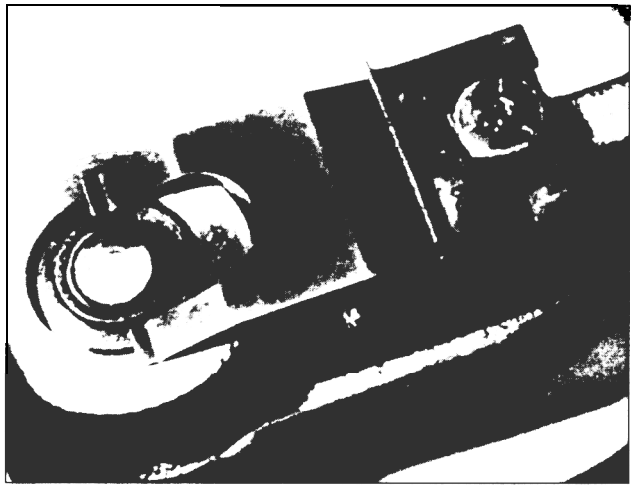

FIG. 2.1.6

1. Remove the master piston from the bore using needle nose pliers. The master piston should move smoothly in the bore. If binding occurs, check for burrs or contaminants in the oil. The sides of the master piston may shown some polish but should not show extensive scoring, grooving or wear.

2. Inspect the hard face surface. Pitted, chipped, cracked or galled pistons should be replaced.

3. Coat the master piston with clean engine oil before reinstalling.

Injector/Exhaust Rocker Arm Adjusting Screw Inspection

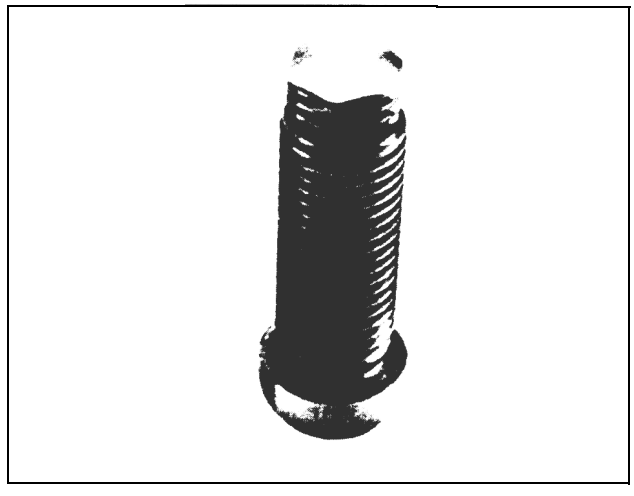

FIG. 2..1.7

1. Check both the hex head and spherical (ball) end surface of the adjusting screws. The spherical end should be checked for proper contour and smooth appearance.

2. Check the hex head for excessive wear. If a depression. 0.005" or deeper, is found in the top of the hex head, or if the pattern of "wipe" extends beyond the hex, replace the adjusting screw. Also replace the companion master piston.

Slave Piston Inspection

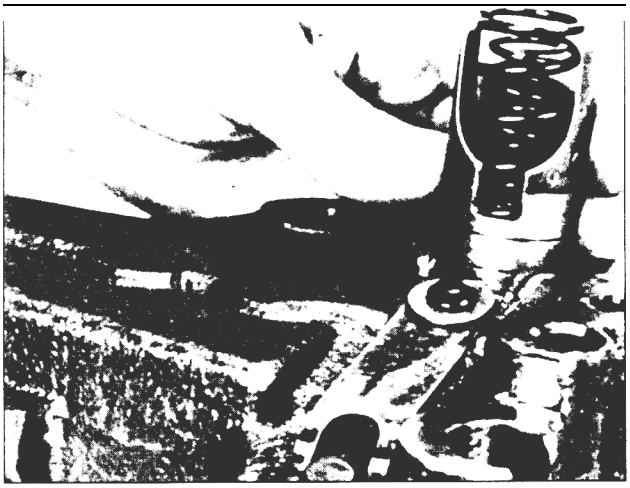

FIG. 2.1.8

WARNING

WEAR SAFETY GLASSES. FOLLOW INSTRUCTIONS CAREFULLY THE SLAVE PISTON IS RETAINED BY A SPRING UNDER HEAVY COMPRESSION. IF INSTRUCTIONS ARE NOT FOLLOWED AND PROPER TOOLS ARE NOT USED, THE SPRING COULD BE DISCHARGED WITH ENOUGH FORCE TO CAUSE PERSONAL INJURY.

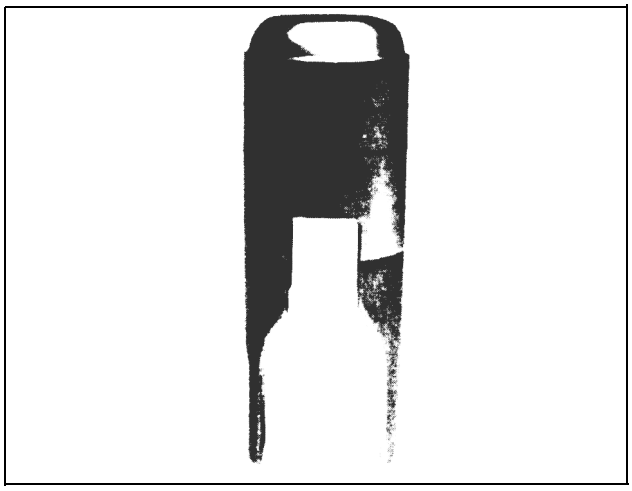

FIG. 2.1.9

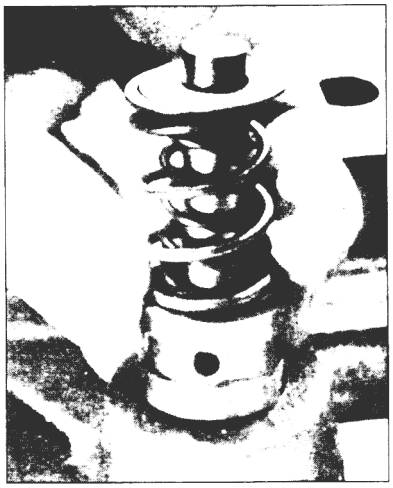

FIG. 2.1.10

1. Check for nicks or burrs that could cause binding. Clean the piston in an approved cleaning solvent. Replace the piston if the ground surtace on the outside diameter looks questionable.
2. Run a small wire through the bleed holes in the single-valve and Caterpillar and Mack engine brakes.

Crosshead Screw and Pin Assembly Inspection (Single-valve Opening)

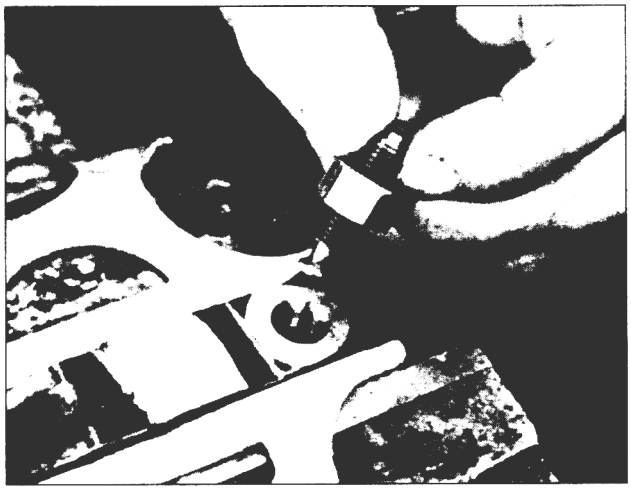

FIG. 2.1.11

Inspect the crosshead pin assembly for the following:

1. Snap ting or grip ring present.
2. Cracks in screw body.
3. Wear on pin where valve stem is contacted.
4. Wear on screw where valve stem is contacted.
5. Bent pin.
6. Cracks in pin.

If any of these conditions are found, the pin assembly must be replaced. Also examine the slave piston for signs of wear at the contact point with the pin assembly.

Slave Piston Adjusting Screws Inspection

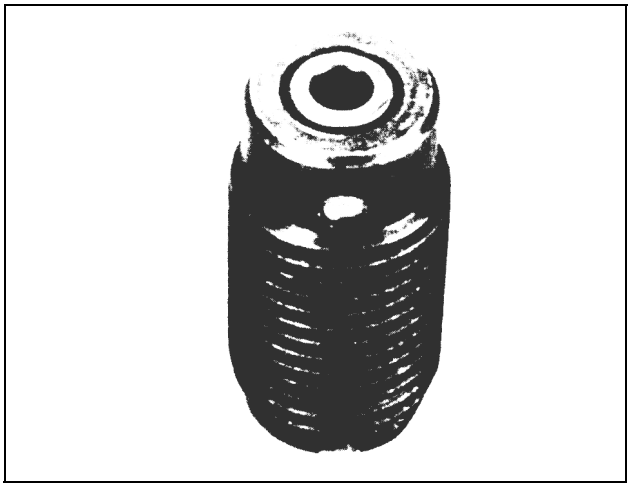

FIG. 2.1.12

Different types of slave piston adjusting screws are used in the various engine brake model housings. These parts are very similar in appearance but must only be used in their designated housings. Refer to current parts and service publications for correct applications.

Part numbers for the Auto-Lash®, Power-Lash® and reset screws are located on the top of the screw body. The screw body has a 1/2 x 20 thread.

The safety valve has a plunger protruding from the bottom of the screw. The screw body has a 3/8 x 24 thread.

1. Inspect Auto-Lash' for proper plunger protrusion. Inspect for strong spring resistance when depressing plunger. Look for cracks in the screw body and replace the Auto-Lash if any cracks are found.

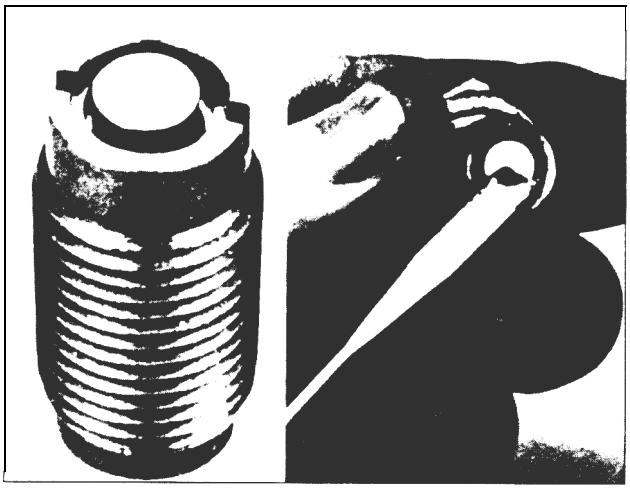

FIG. 2.1.13

2. Inspect the slave piston adjusting screw. The plunger should have light spring pressure apparent when depressed and should move freely. Be sure the retaining ring is fully engaged in its groove.
3. Clean in an approved cleaning solvent. Replace the entire screw if necessary.

⚠ CAUTION

MAKE NO ATTEMPT TO READJUST OR TAMPER WITH THE ADJUSTING SCREW. THIS COULD RESULT IN ENGINE DAMAGE.

Control Valve Inspection

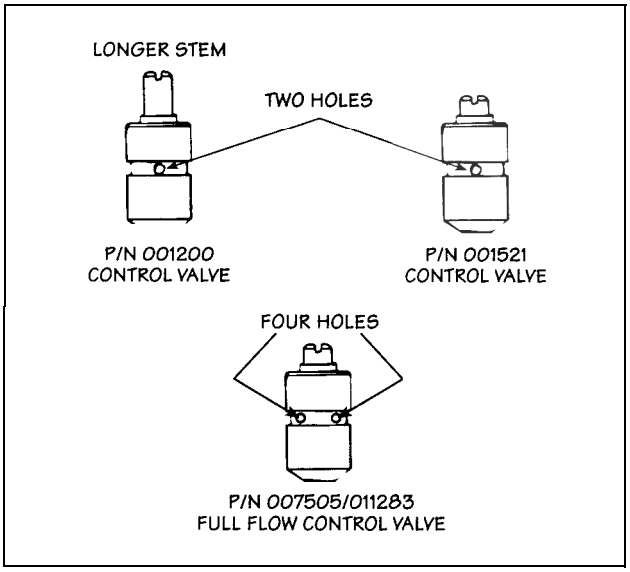

FIG. 2.1.14

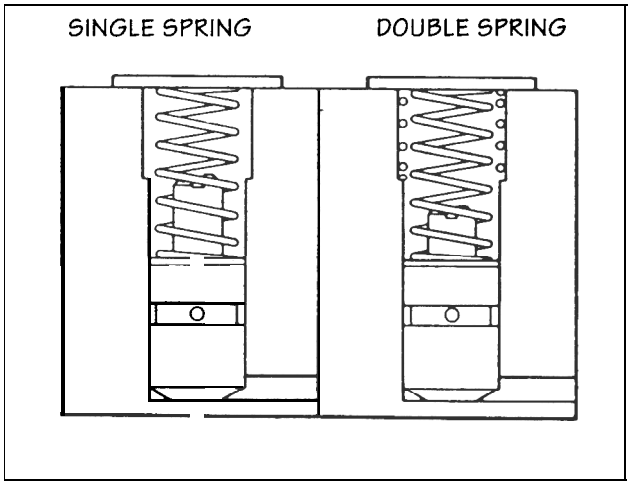

FIG. 2.1.15

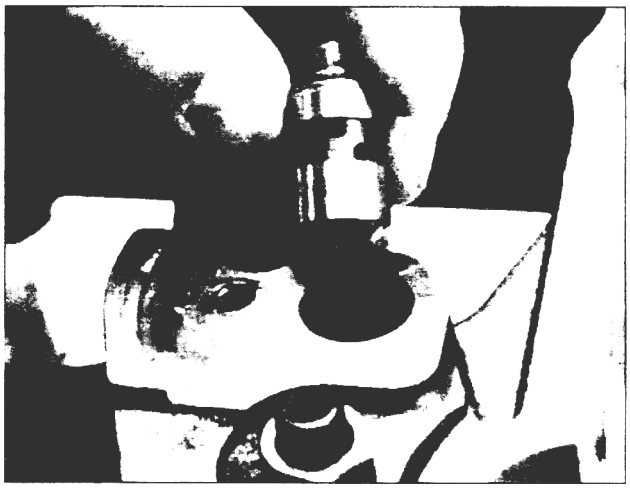

FIG. 2.1.16

1. Check to see that control valves move freely in their bores.
2. Wash control valves with an approved cleaning solvent. Insert a wire in the entrance hole in the base of the control valve to make sure the check ball is free and has light spring pressure.
3. Dip the control valves in clean lube oil.
4. Hold the valve at the top of its bore and release. When released, the valve should slowly settle under its own weight to the bore bottom. If binding occurs or the check ball is stuck, replace the control valve.

NOTES

DETROIT DIESEL

Automotive 370-500 BHP

SERIES 60®

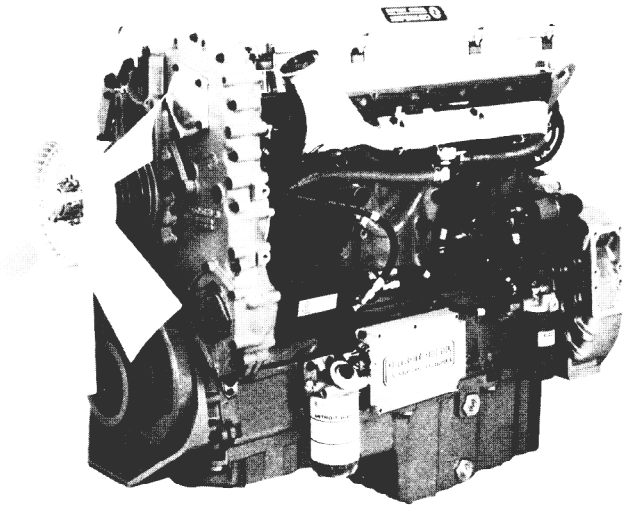

General Specifications

Basic Engine	4 cycle
Model	6067GK60
Number of Cylinders	6 Inline
Air System	Turbocharged Air-to-Air Charge Cooling
Control	DDEC
Bore and Stroke	5. 12 in x 6.30 in (130 mm x 160 mm)
Displacement	778 cu in (12.7 liters)
Compression Ratio	15.0 to 1
Length	57 in (1448 mm)
Width	34 in (864 mm)
Height	50 in (1273 mm)
Weight (dry)	2630 lbs (1193 kg)

Rated Power Output

Maximum BHP @ RPM	Peak Torque @ RPM
430HP FAMILY	
370HP (276 kW) @ 1800	1450 lb ft (1966 N•m) @ 1200
400HP (298 kW) @ 1800	1450 lb ft (1966 N•m) @ 1200
430HP (320 kW) @ 1800	1450 lb ft (1966 N•m) @ 1200
370/400HP (276/298 kW) @ 1800	1450 lb ft (1966 N•m) @ 1200 CP
370HP (276 kW) @ 1800	1450 lb ff (1966 N•m) @ 1200
400HP (298 kW\ @1800	1450 lb fl (1966 N•m) @ 1200
430HP (320 kW) @ 1800	1450 lb.ft (1966 N•mj@ 1200
370/430HP (276/320 kW) @ 1800	1450 lb.ft (1966 N•m)@ 1200 CP
370HP (276kW)@2100	1450 lb. ft (1966 N•m) @ 1200
400HP(298 kW)@2100	1450 lb. ft (1966 N•m) @ 1200
430HP (320kW)@2100	1450 lb. ft. (1966 N•m) @ 1200
370/430HP (276/320 kW) @ 2100	1450 lb. ft. (1966 N•m) @ 1200 CP
370HP (276 kW) @ 1800	1550 lb ft (2101 N•m) @ 1200
400HP (298 kW) @ 1800	1550 lb ft (2101 N•m) @ 1200
430HP (320 kW) @ 1800	1550 lb ft (2101 N•m) @ 1200
370/430HP (276/320 kW) @ 1800	1550 lb ft (2101 N•m) @ 1200 CP
430HP (320 kW) @ 1800	1550 lb ft (2101 N•m) @ 1200
430/470HP (320/350 kW) @ 1800	1550 lb ft (2101 N•m) @ 1200 CP
430HP (320kW)@2100	1550 lb. ft (2101 N•m) @ 1200
430/470HP (320/350kW) 2100	1550 lb. ft (2101 N•m) @ 1200 CP
470HP FAMILY	
470HP (350 kW) @ 1800*	1550 lb ft (2101 N•m) @ 1200
470HP (350 kW) @ 2100*	1550 lb ft (2101 N•m) @ 1200
470HP (350 kW) @ 2100*	1450 lb ft (2101 Nom)@ 1200
500HP @ 1800RPM*	1550 lb ft (2101 N•m) @ 1200
500HP@2100RPM*	1550 lb ff (2101 N•m) @ 1200

Equipment Specifications

DDEC — Detroit Diesel Electronic Controls are standard on all Series 60 engines. This electronic unit fuel injector and engine management control system is the most advanced system available in the industry DDEC includes state-of-the-art diagnostics for critical engine functions.

Overhead **Camshaft** —This design optimizes intake and exhaust air passages in the cylinder head for easier breathing, and minimizes valve train losses by eliminating the need for push rods.

Short **Ports** —The cylinder head has very short intake and exhaust ports for efficient air flow, low pumping losses and reduced heat transfer.

Iron Crosshead piston —The top ring can be placed much closer to the top of the iron crosshead piston. This reduces the dead volume above the top ring and improves fuel economy.

Injector Rocker Arm with Ceramic **Rollers** —The cam follower roller in the Series 60 injector rocker arm is made of silicon nitride. The low wear properties of this ceramic makes it possible to operate at very high injection pressures while maintaining long life of the roller. High injection pressure is one way Detroit Diesel is able to meet the stringent particulate and smoke emission standards without altertreatments.

Bearing —The Series 60 features large main and connecting rod bearings for long life.

Eight Head Bolts per Cylinder —The head bolts provide a uniform load on the gasket and liner to reduce stress on the liner flange and block counterbore.

High Efficiency Tullmcharger —Combined with a pulse-recovery exhaust manifold, the high efficiency turbocharger provides an efficient transfer of energy for improved fuel economy.

Cruise Power —This feature allows you to take advantage of additional torque and better performance when operating your truck in cruise control. The full rated torque is available when operating in cruise control, or in the PTO mode to improve performance. The higher torque improves drivability in hilly terrain and can improve fuel economy because fewer shifts are required and the engine operates closer to its optimum efficiency.

Top Liner Coolin —The Series 60 features top liner coding. This has been accomplished by machining a coolant channel high up on the block, so that the top of the liner is surrounded by coolant, resulting in longer ring life

'49 *STATE RATINGS*

Photograph Illustrates a typical automotive engine

Rating conditions of SAE 77°F (25°C) and 2931 in Hg (99 kPa) Barometer (Dry)

For a complete listing of standard and optional equipment, consult your itstributor or authorized Detroit Diesel Corporation representative

Performance Curves

370 BHP

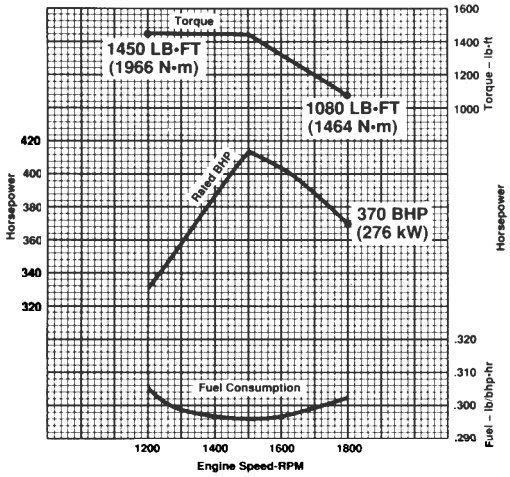

430 BHP

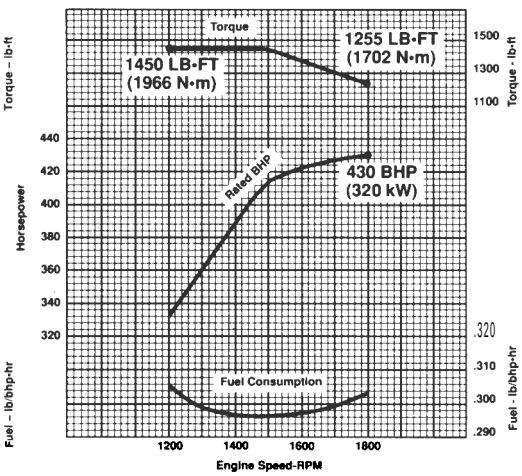

470 BHP

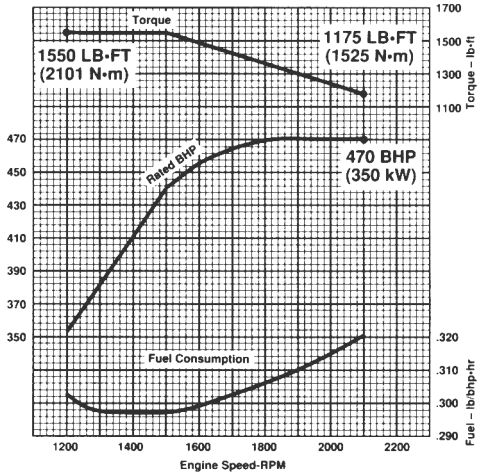

Rating Explanation

RATED BHP is the power rating for variable speed and load applications where full power is required intermittently.

FUEL CONSUMPTION CURVE shows fuel used in pounds per brake horsepower hour.

THIS RATING does not include power requirements for accessory and standard equipment.

Airp-to-Air Charge Cooling —To enhance fuel economy, the Series 60 has been designed to use air-to-air charge cooling. Air-to-air offers fuel economy gains of 2-5% over traditional intake air cooling systems, Incoming air is compressed by the turbocharger and directed to a finned heat exchanger in front of the vehicle's radiator. The heat exchanger uses no liquid coolant but relies Instead on ram air for cooling the charge air resulting in lower retake air temperature from approximately 300°F(149°C) to below 10O°F(38°C) This cooler air aids combustion, thereby increasing fuel economy

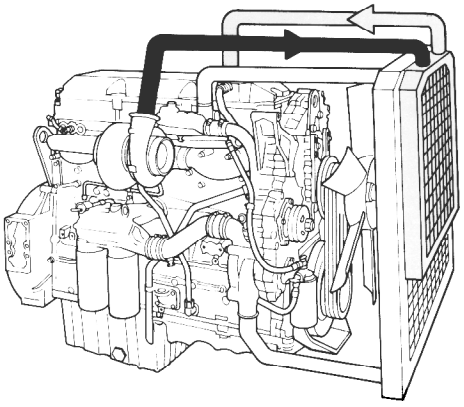

■ Hot Air
Cool Air

Series 60
24 Hour Hot Line
Phone 1-800-445-1980

DETROIT DIESEL ®
CORPORATION

13400 Outer Drive, West / Detroit, Michigan 48239-4001
Telephone: 313-592-5000
FAX: 313-592-7288

DETROIT DIESEL ISO CERTIFIED ORGANIZATION 9001 CORPORATION

Detroit Diesel®, the spinning arrows and Series 60® are registered trademarks of Detroit Diesel Corporation

3SA353 9504 As technical advancements continue, specifications will change. Printed in U.S.A.

DETROIT DIESEL

SERIES 60®

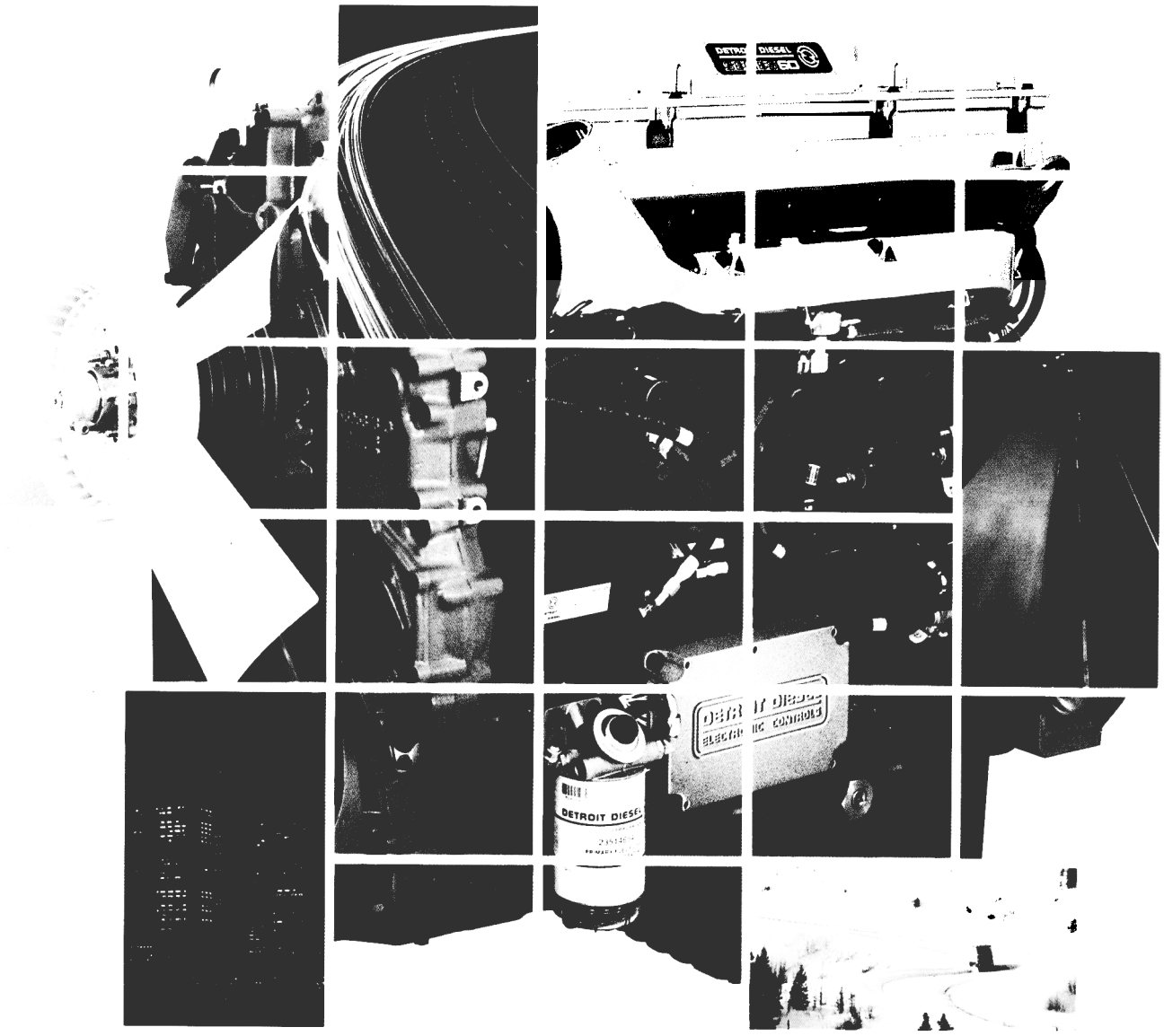

Innovative Technologies

SERIES 60
A Success Story

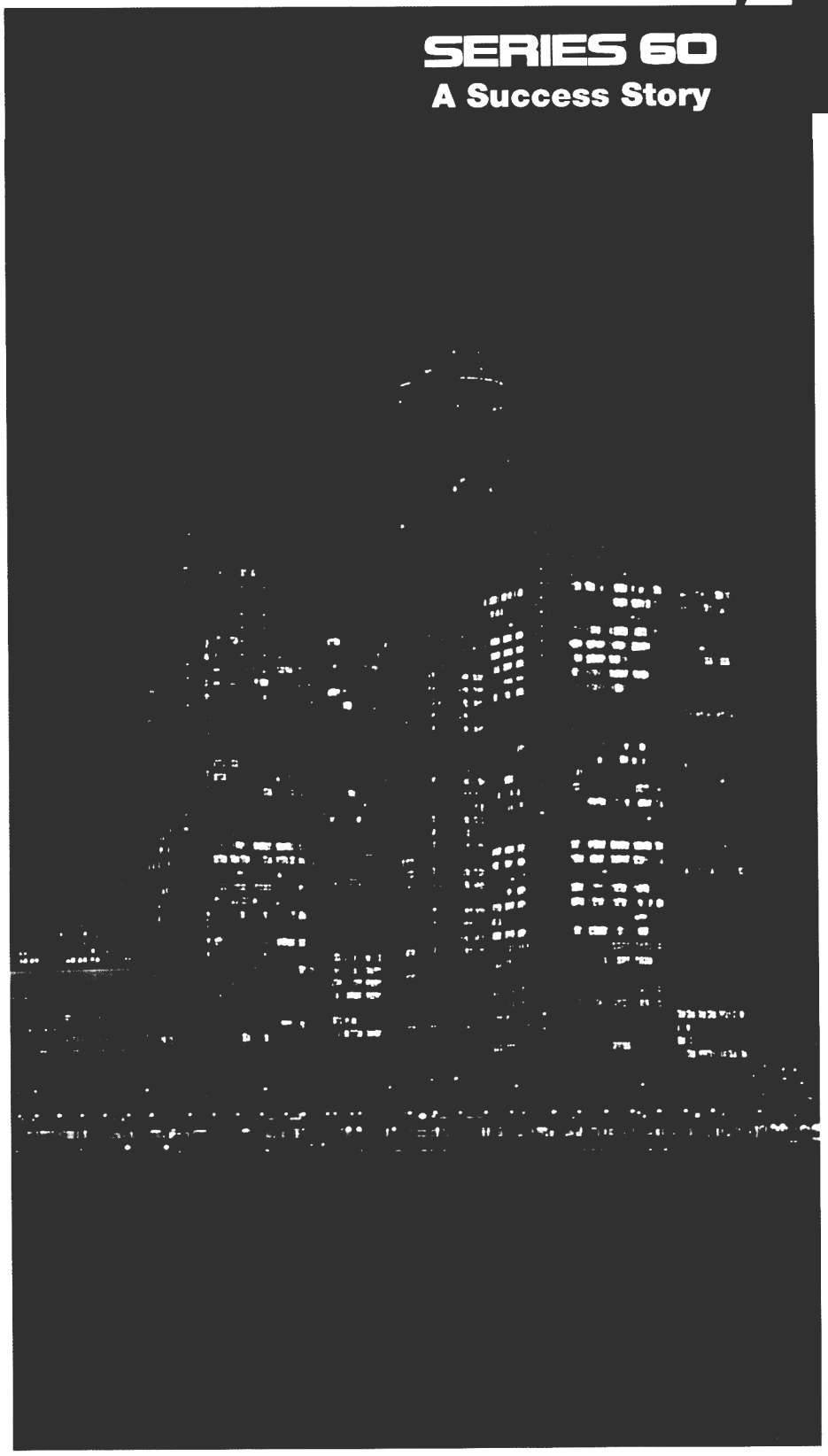

The Detroit Diesel Series 60 engine has been a success from the start of production in 1987. The Series 60 was the first fully integrated heavy duty diesel engine wiTh electronic controls in the world. Since then, the Series 60 continues to set the standard with innovative technology and superior fuel economy in the competitive heavy duty diesel engine market.

The DDC Series 60 engine has become the most popular in the class 8 truck market. We continue to increase our rate of production to satisfy market demand. Our team of engineering, manufacturing, and sales personnel strive to reach 7 goals:

- Do it right the first time
- Lower operating costs
- Understand and respond to our customer needs
- Establish long-term relations with suppliers
- Generate a high level of quality and productivity
- Provide outstanding engine performance
- Improve on all these goals

Series 60 Horsepower

The Series 60 engine offers a wide range of horsepower and torque options to match your vehicle vocation. The ratings governed at 1800 rpm offer excellent fuel economy. While the engines governed at 2100 rpm provide a wider operating range for owner/operators and specialty applications using automatic transmissions. The extended torque

in our engine calibration allows the driver to pull hills without shifting gears. This strong performance makes the Series 60 appealing to vehicle operators.

Detroit Diesel's Electronic Controls (DDEC) offers many features. Including a feature that allows a total of four horsepower ratings to be stored in one engine. The advantage to this is that horsepower can be changed for resale or as needed by just plugging the diagnostic data reader (DDR) into the vehicle dash, This feature enhances resale and is password protected.

Cruise Power

Cruise power allows you to take advantage of additional torque and better performance when operating your truck in cruise control. Full rated torque is available when operating in cruise control to improve performance, The higher torque improves driveability in hilly terrain and can improve fuel economy because fewer shifts are required and the engine operates closer to its optimum efficiency.

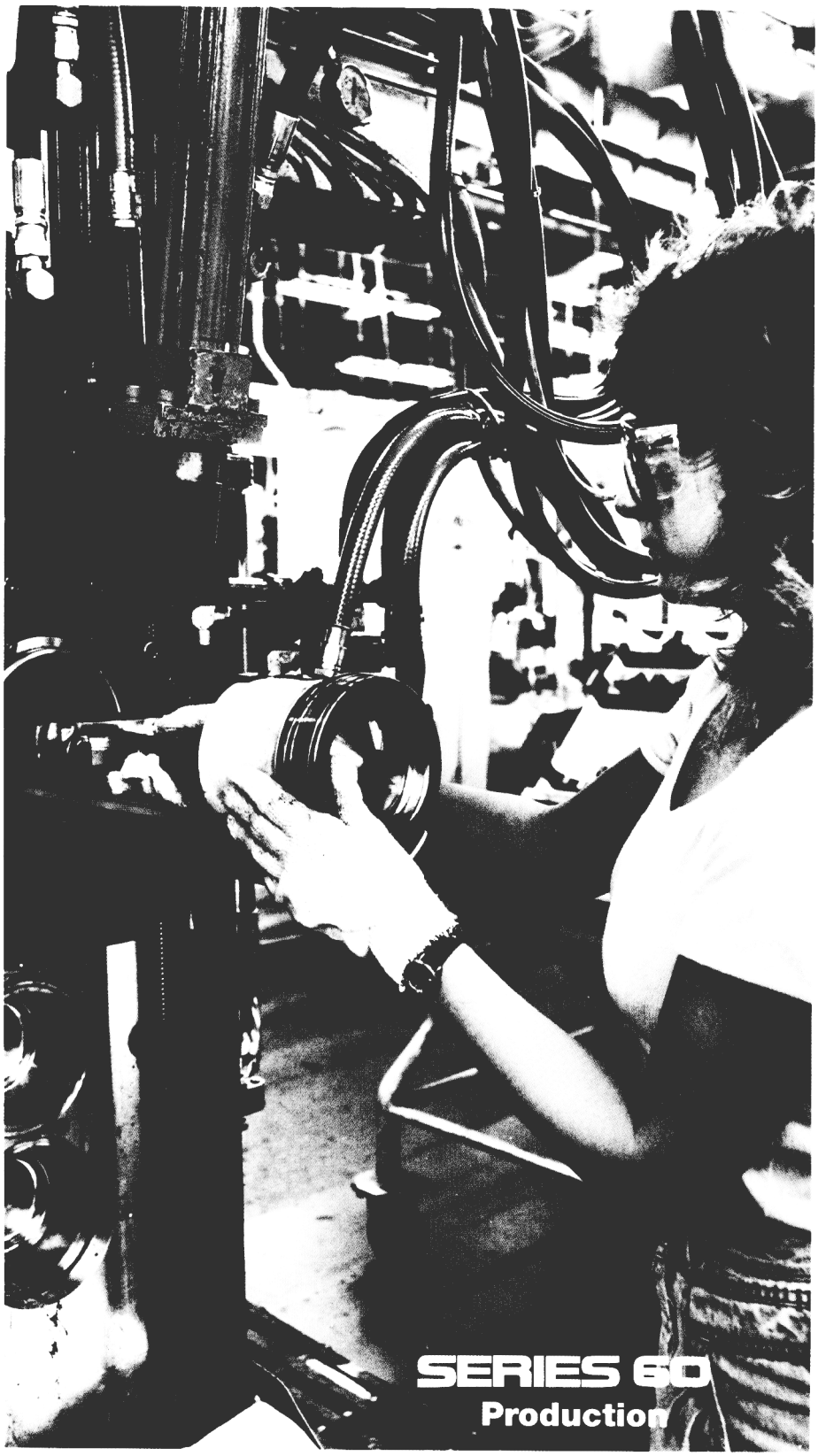

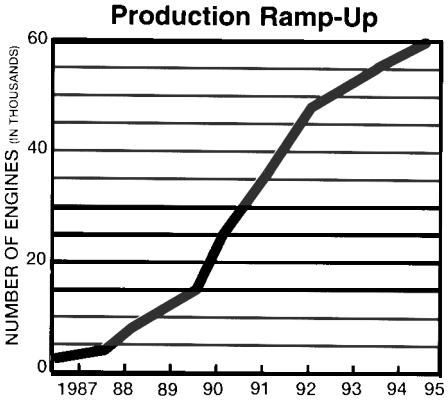

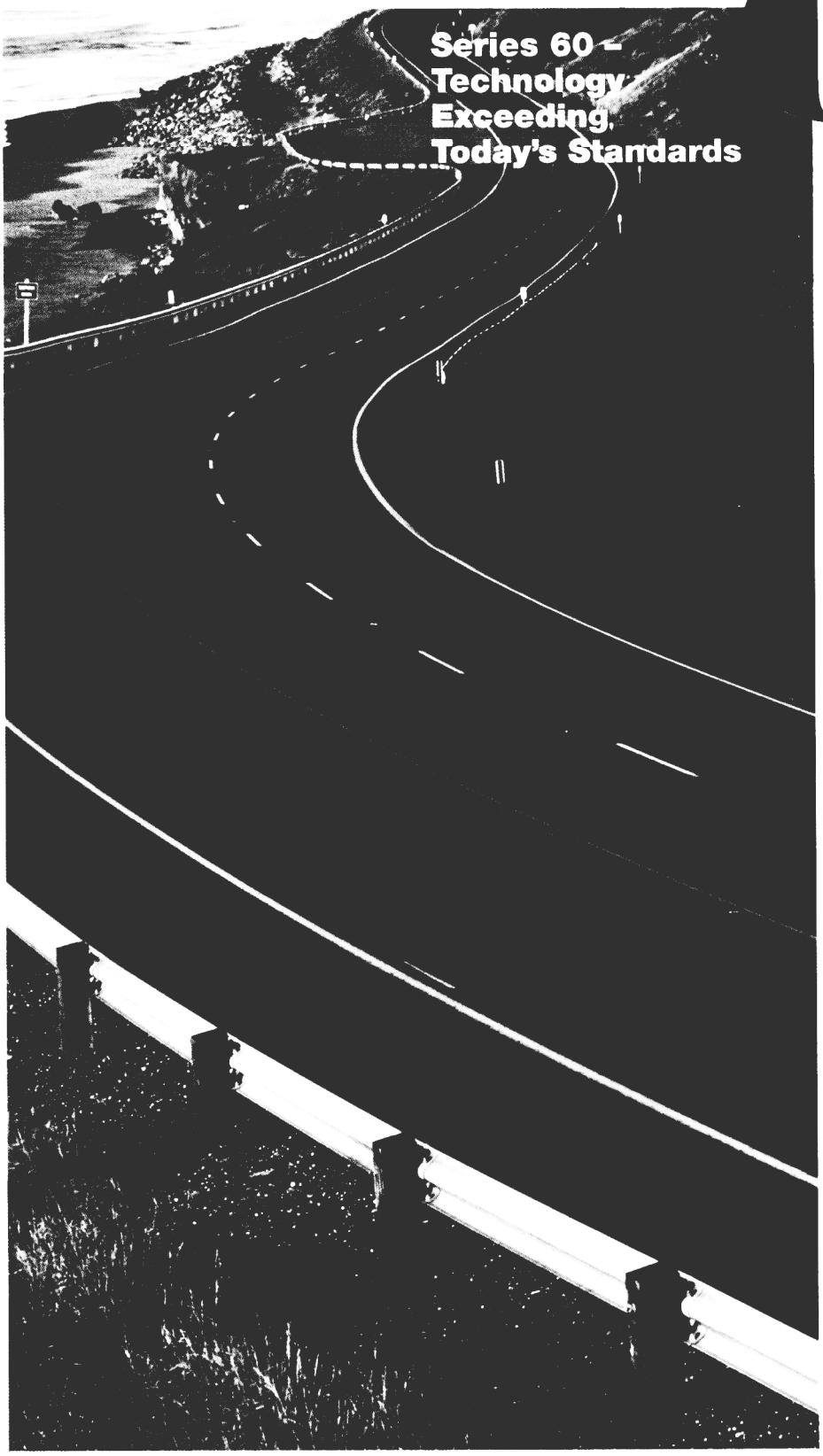

Series 60 – Technology Exceeding Today's Standards

Overhead Camshaft

DDC engineers optimized the design of the engine by incorporating an overhead camshaft. This eliminates push rods, lifters and 40 wear surfaces. The benefits of this design are:

- Stronger overhead design
- Fewer parts
- Easier to service
- Lower exhaust emissions
- Less internal engine friction
- Better fuel economy

Top Liner Cooling

Detroit Diesel has a patented feature called top liner cooling. This is a channel machined in the top portion of the liner and block that allows engine coolant to flow around the liner. Why is this important?

- Cooler cylinder temperatures
- Longer ring life
- Longer piston life

Pistons

The two piece cast iron crosshead piston has small clearances to the plateau honed cast iron cylinder liner. This is possible since both parts are made of the same material. The benefits are:

- Stronger parts
- Less wear at cold start up
- Reduced noise
- Lower exhaust emissions

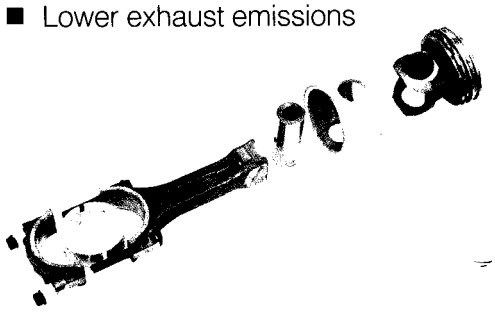

Cylinder Head Design

With the overhead cam design, the Series 60 has 8 headbolts per cylinder evenly spaced to provide a uniform clamping load, This design provides a one million pound clamping force to hold the head to the block, which eliminates head gasket leaks,

Intake and Exhaust

Our engineers kept the design of the intake and exhaust ports simple, Using an overhead cam and 4 valves per cylinder allows the engine to breathe freely. Air flows in one side of the engine and out the other. Why is this important?

- Cooler running engine
- More efficient, so horsepower losses are lower

Ceramic Rollers

The cam follower roller in the Series 60 injector rocker arm is made of silicon nitride. This ceramic material has high strength and low wear properties. The advantages are:

- More durable
- Longer life

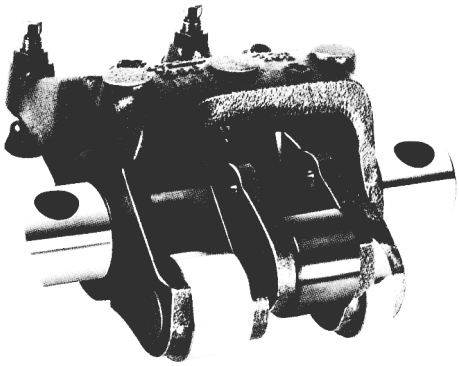

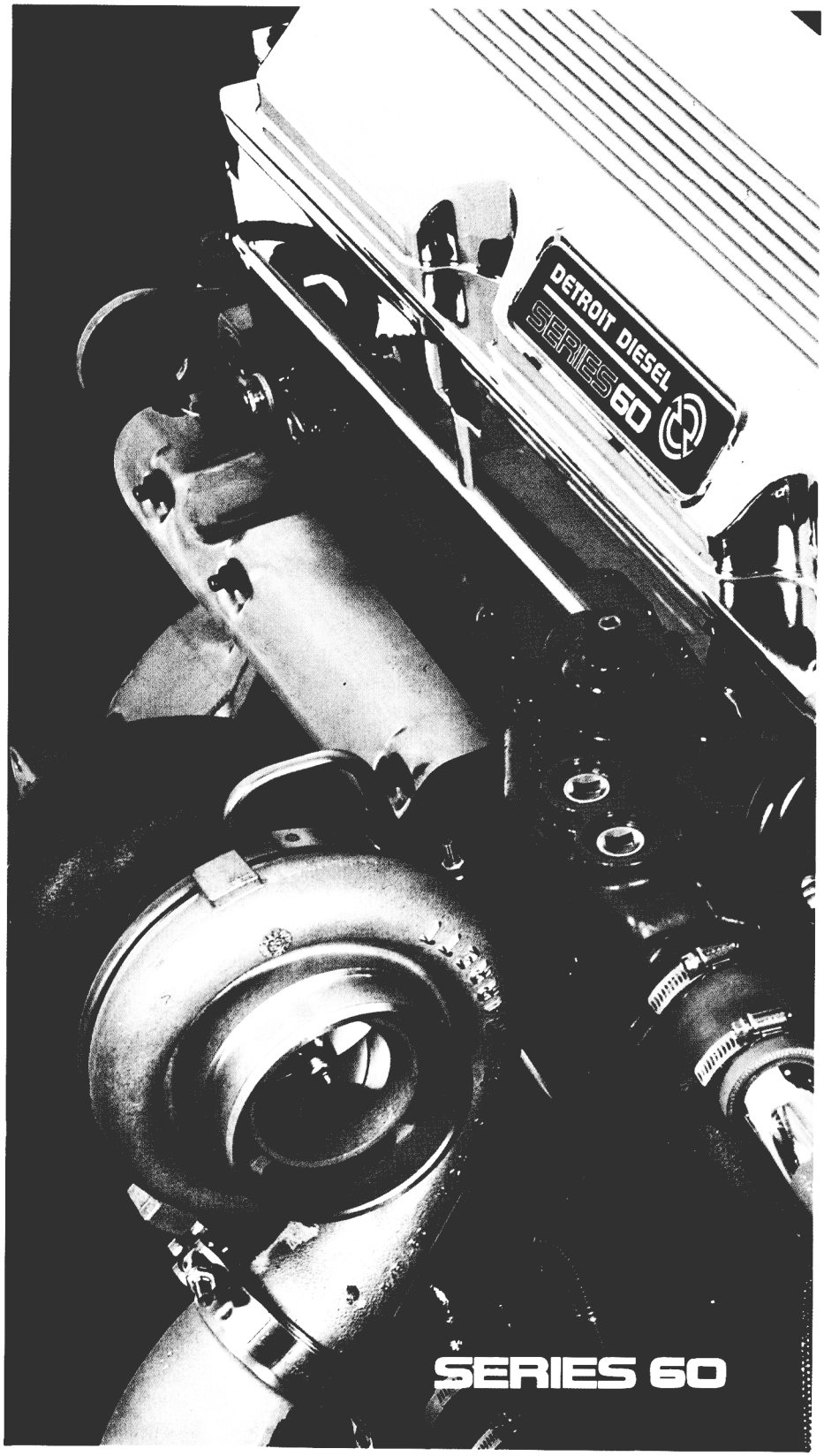

Detroit Diesel Electronic Controls DDEC 111



The Series 60 features integral electronic controls called Detroit Diesel Electronic Controls (DDEC Ill), Its major components are the Electronic Control Module (ECM), the Electronic Unit Injectors (EUI), and the engine sensors, The ECM is the computer that receives electronic inputs from the driver as well as engine mounted sensors. Engine speed information is used to control both the quantity of fuel injected and injection timing.

The EEPROM chip (Electronically Erasable Programmable Read Only Memory) is located in the ECM and contains the operating software. This software controls the horsepower, torque, and maximum engine speed. Additional software is programmed into the EEPROM to control the engine protection devices, vehicle speed limiting, and cruise control that can be set with a Diagnostic Data Reader (DDR) to optimize specific fleet requirements. A list of DDEC Ill sensors and features are shown in the chart on the next page.



Diagnostic Data Reader

The Leader In Electronic Injectors

The electronic unit injector works on the same basic principle as the mechanical unit injector with the simple addition of an electronically controlled solenoid valve that meters fuel input.

Our electronic injectors are self-compensating and greatly reduces the need for tune-ups.

With electronic controls, fuel economy is improved and the exhaust emissions are kept low in the following ways:

- The electronic governor limits maximum RPM to a preset value, This allows for precise control over maximum vehicle speed,
- Variable injection timing provides exceptional fuel economy, by taking into consideration the temperature, load, speed and turbo boost.
- Electronic diagnostic procedures can be used to help locate specific problems.
- Since electronics control injection timing, as well as the quantity of fuel, the Series 60 can start unaided at 10"F(-12°C),
- The ECM controls the maximum vehicle speed within the most efficient engine operating range,



Electronic Unit Injector

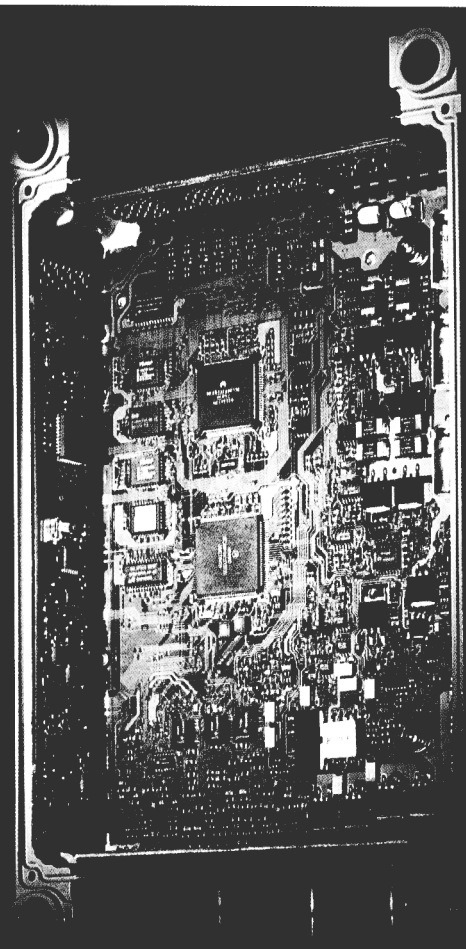

DDEC III ECM

DDEC III sensors:

- Coolant temperature
- Oil temperature
- Oil pressure
- Coolant level
- Throttle position
- Speed, timing
- Air temperature (air intake manifold)
- Fuel pressure
- Turbo boost
- Vehicle speed

DDEC III software features:

- Cruise control
- Cruise power
- Controls on/off fans
- Controls engine braking
- Engine fan braking
- Vehicle speed limiting
- Cruise control automatic resume with double clutching
- Low DDEC voltage light
- Low coolant light
- Vehicle power shutdown
- Idle timer shutdown
- Manual fan control override
- Idle adjustment
- Customer password
- Horsepower password
- Maximum security
  - Locks out all changes to ECM
- Communication links SAE J1587, J1922, J1939
- Progressive shifting
- Pressure governor
- Starter lockout
- Engine protection
- Starter lockout deceleration light
- Firetruck controls
- Ether start controls
- Optimized idle
- Air temperature shutdown

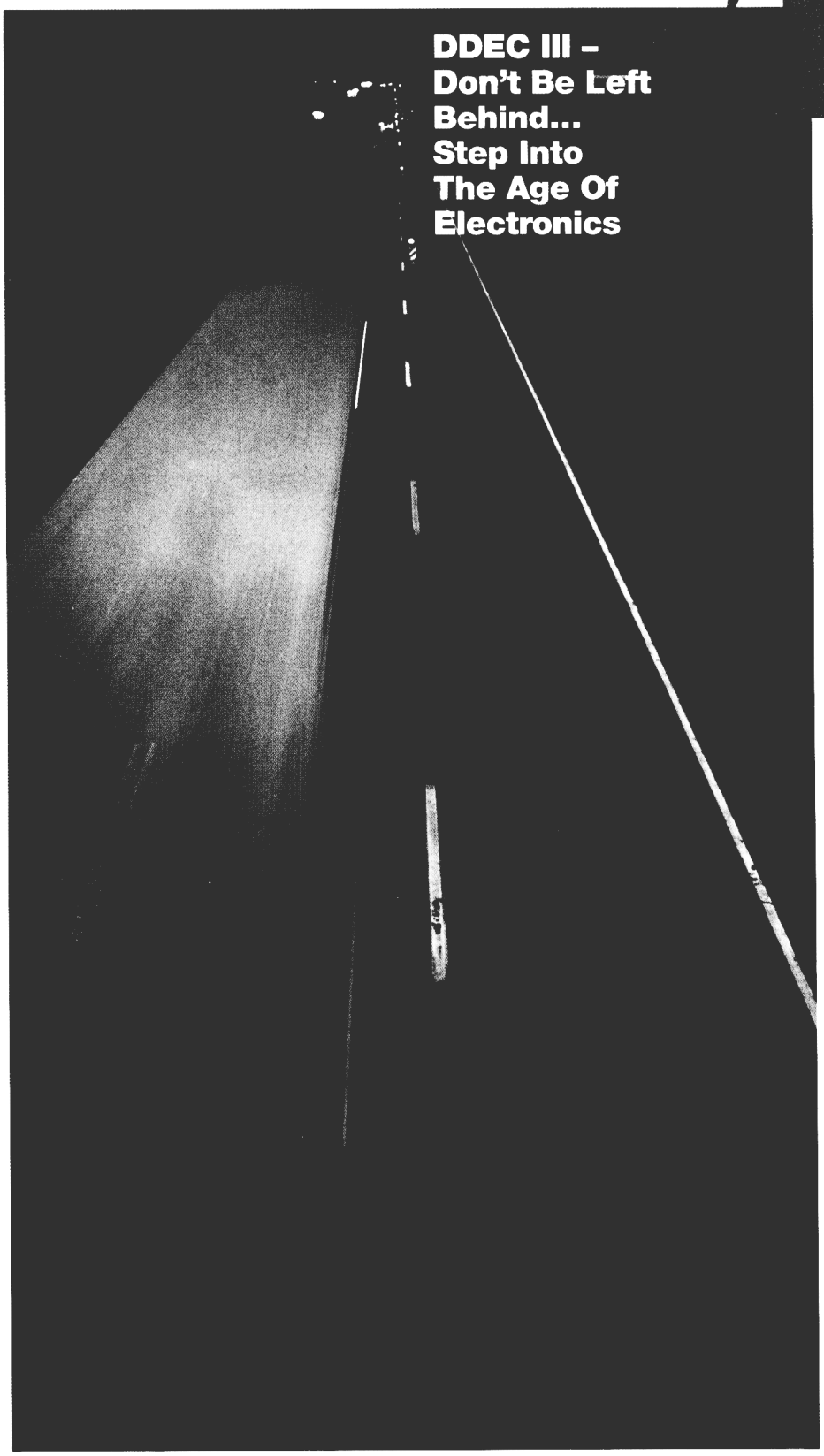

DDEC III – Don't Be Left Behind... Step Into The Age Of Electronics

The DDEC ECM provides state-of-the-art control and monitoring, as well as a stored summary of engine performance. ProDriver™ takes the process further by providing the driver and fleet manager with access to the vital data provided by DDEC via the SAE diagnostic data link. The concept is further extended with the Data Logger™, which provides monitoring of the engine and other electronic systems, combined with substantial storage capacity, fuel tax data collection, flexible data extraction and communication capabilities. Pro Manager™ PC software extracts and analyzes data from the DDEC ECM, ProDriver and Data Logger systems. This comprehensive "expert" analysis allows managers to take action immediately, instead of spending hours trying to analyze the situation.



Data Hub Family of Products

- TRAC software
- ProDriver
- Data Logger
- ECM Data Pages
- ProManager software

1,000,000 Miles

Most Series 60 engines that have accumulated over half a million miles have encountered few problems. Durability was substantiated when a Series 60 with over 1,000,000 miles was torn down and inspected. What was revealed at teardown?

- Cylinder block and head had no distress or cracks.
- Gear case, oil pan, and major castings are reusable.
- Liners showed original honing marks,

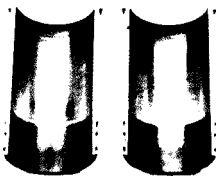

- Liner seals showed no leakage,
- Pistons had no cracks or distress and minimal wear.

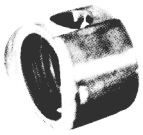

- Crankshaft was reusable.
- Gear train was in excellent reusable condition.

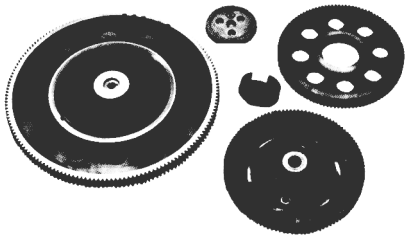

- Camshaft had no distress and only required grinding on one lobe.
- Valves showed very low wear.

The Series 60 manufacturing process contributes to the high level of quality and durability of the Series 60.

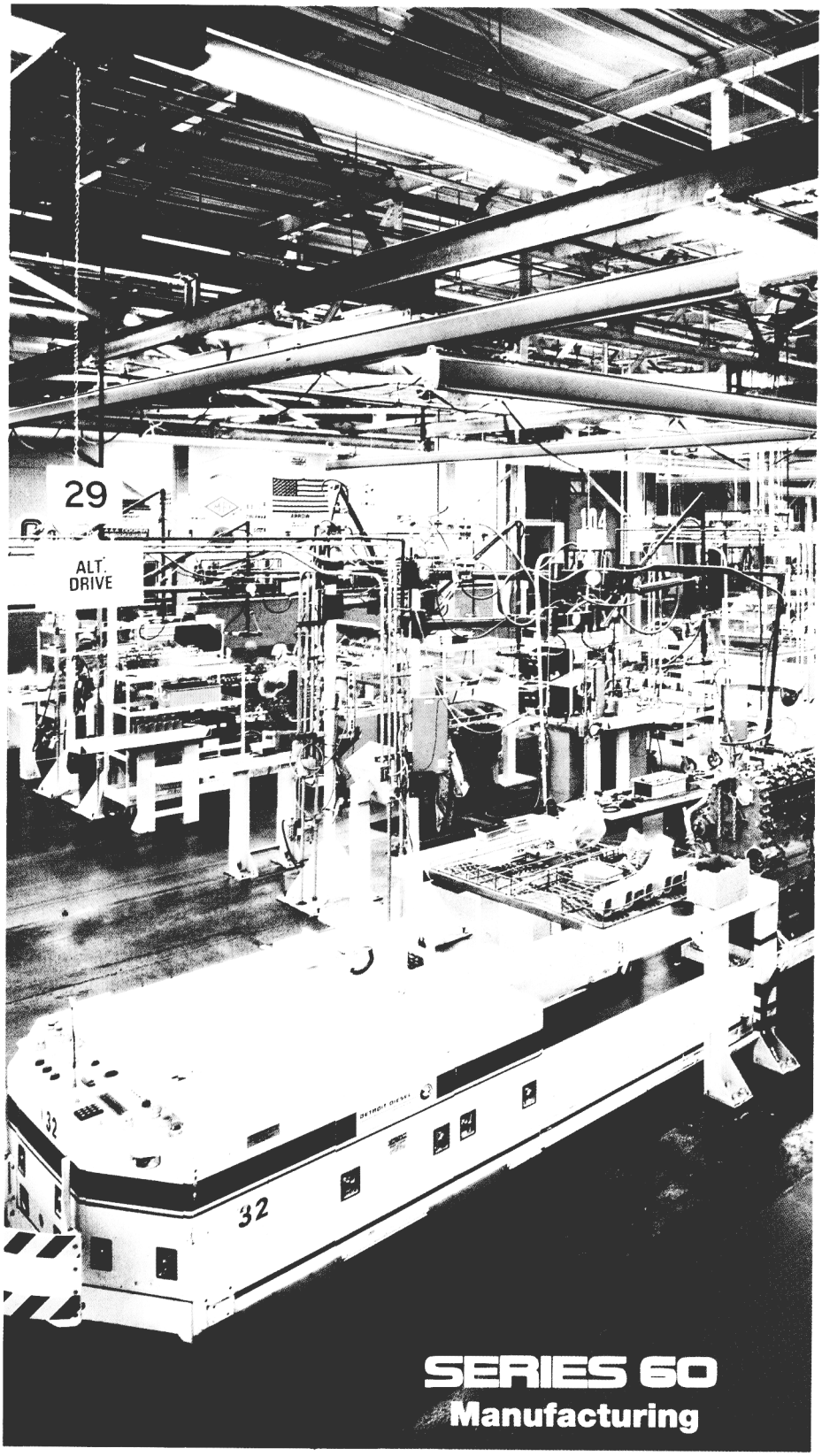

Superior Fuel Economy

Detroit Diesel has broken the 0.300 brake specific fuel consumption (BSFC) barrier. This is a milestone in heavy duty diesel engine technology. The Series 60 is the first engine in the world to achieve this exceptional level of performance. Customers average 6-8 mpg with heavy loads. With lighter loads, the fuel economy is even more incredible. Our technology exceeds today's standards. Detroit Diesel is racing ahead, and we are not looking back!

Max BHP @ RPM	Peak Torque @ RPM
330HP FAMILY	
300HP @ 1800RPM	1150FT-LB @ 1200RPM
330HP @ 1800RPM	1150FT-LB @ 1200RPM
300/330HP @ 1800RPM	1150FT-LB @ 1200RPM CP
330HP @ 1800RPM	1250FT-LB @ 1200RPM
350HP @ 1800RPM	1250FT-LB @ 1200RPM
330/350HP @ 1800RPM	1250FT-LB @ 1200RPM CP
330HP @ 2100RPM	1250FT-LB @ 1200RPM
325HP @ 2100RPM**	1350FT-LB @ 1200RPM
325/350HP @ 2100RPM**	1350FT-LB @ 1200RPM
330HP @ 2100RPM	1350FT-LB @ 1200RPM
365HP FAMILY	
330HP @ 1800RPM	1350FT-LB @ 1200RPM
350HP @ 1800RPM	1350FT-LB @ 1200RPM
365HP @ 1800RPM	1350FT-LB @ 1200RPM
330/350HP @ 1800RPM	1350FT-LB @ 1200RPM CP
330HP @ 1800RPM	1350FT-LB @ 1200RPM
350HP @ 1800RPM	1350FT-LB @ 1200RPM
365HP @ 1800RPM	1350FT-LB @ 1200RPM
330/365HP @ 1800RPM	1350FT-LB @ 1200RPM CP
430HP FAMILY	
370HP @ 1800RPM	1450FT-LB @ 1200RPM
400HP @ 1800RPM	1450FT-LB @ 1200RPM
430HP @ 1800RPM	1450FT-LB @ 1200RPM
370/400 @ 1800RPM	1450FT-LB @ 1200RPM CP
370HP @ 1800RPM	1450FT-LB @ 1200RPM
400HP @ 1800RPM	1450FT-LB @ 1200RPM
430HP @ 1800RPM	1450FT-LB @ 1200RPM
370/430 @ 1800RPM	1450FT-LB @ 1200RPM CP
370HP @ 2100RPM	1450FT-LB @ 1200RPM
400HP @ 2100RPM	1450FT-LB @ 1200RPM
430HP @ 2100RPM	1450FT-LB @ 1200RPM
370/430 @ 2100RPM	1450FT-LB @ 1200RPM CP
370HP @ 1800RPM	1550FT-LB @ 1200RPM
400HP @ 1800RPM	1550FT-LB @ 1200RPM
430HP @ 1800RPM	1550FT-LB @ 1200RPM
370/430 @ 1800RPM	1550FT-LB @ 1200RPM CP
430HP @ 1800RPM	1550FT-LB @ 1200RPM
430/470 @ 1800RPM	1550FT-LB @ 1200RPM CP
430HP @ 2100RPM	1550FT-LB @ 1200RPM
430/470 @ 2100RPM	1550FT-LB @ 1200RPM CP
470HP FAMILY	
470HP @ 1800RPM*	1550FT-LB @ 1200RPM
470HP @ 2100RPM*	1550FT-LB @ 1200RPM
470HP @ 2100RPM*	1450FT-LB @ 1200RPM
500HP @ 2100RPM**	1450FT-LB @ 1200RPM
500HP @ 1800RPM*	1550FT-LB @ 1200RPM
500HP @ 2100RPM*	1550FT-LB @ 1200RPM

*49 STATE RATINGS
**BUS RATINGS ONLY

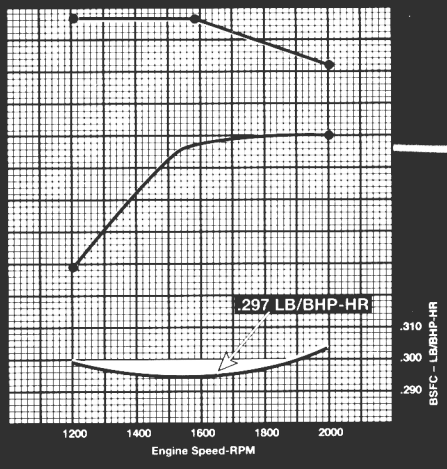

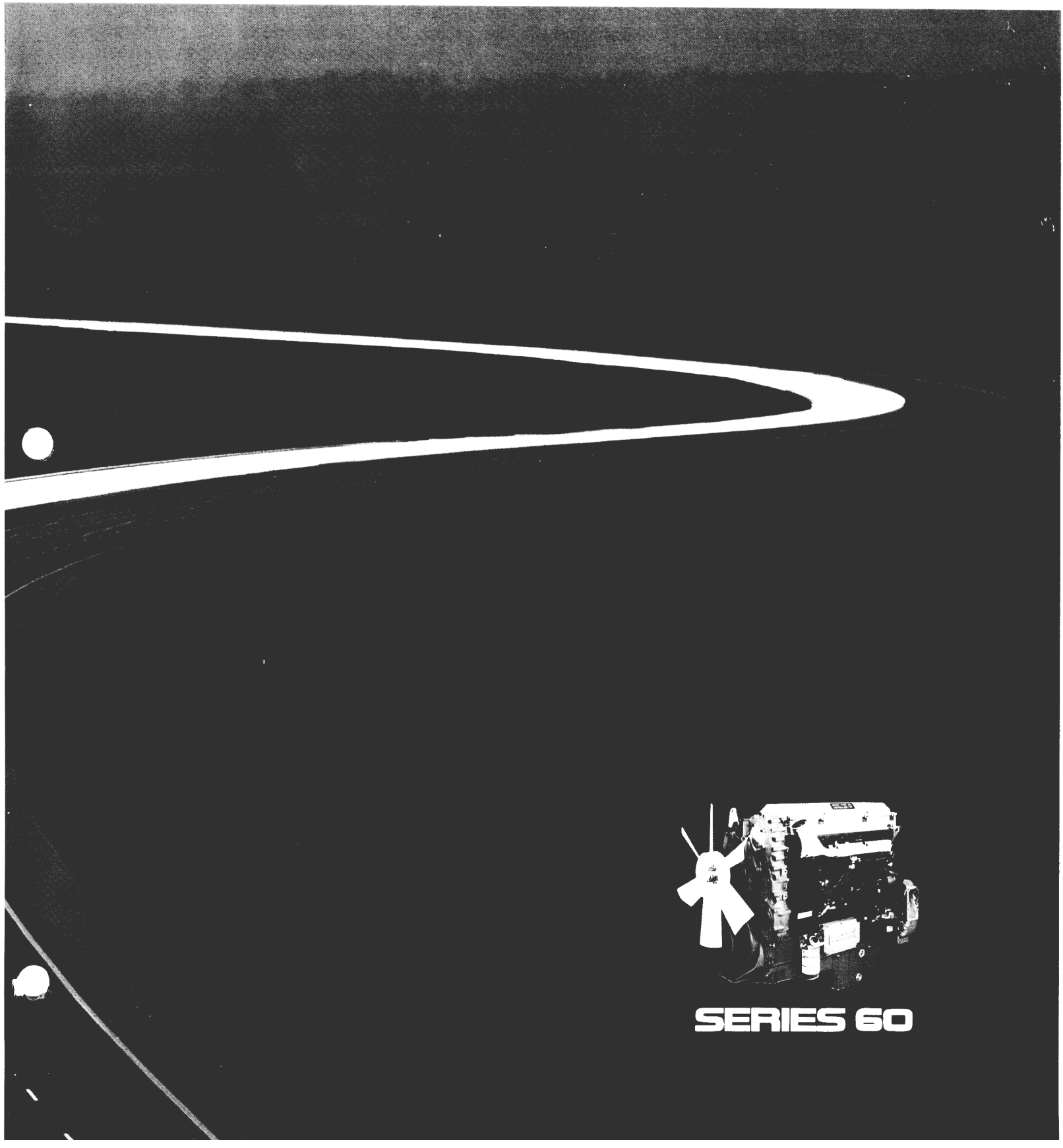
SERIES 60

Parts and Training Support

Your dealer maintains a stock of quality Detroit Diesel parts and is ready to respond to your needs. Service personnel have been trained by our DDC distributors or at our world class training headquarters. They are experts in the proper application, care and maintenance of your Series 60 engine.

You can participate in an extensive engine maintenance and overhaul training program in our training facilities. You will leave with the insight and skills needed to diagnose and troubleshoot almost any engine malfunction on the spot.

Detroit Diesel Corporation is committed to providing excellent service for customers. Nowhere is this commitment more evident than in our Series 60 engine.



Detroit Diesel Parts Center, Canton, Ohio

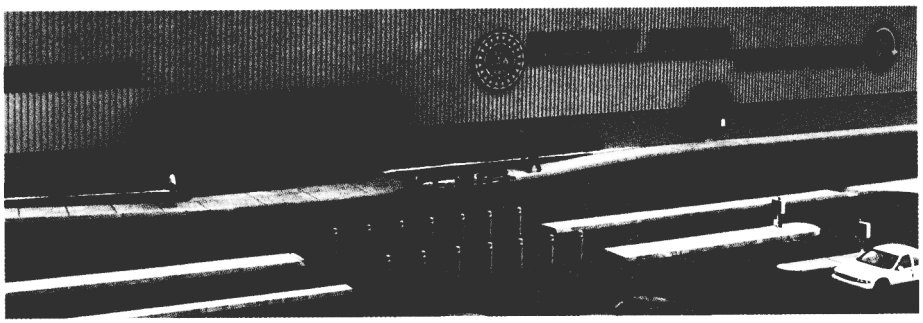

Detroit Diesel Training Center, Redford, Michigan

We Back What We Build

To show our confidence, the Series 60 engine carries a two-year, unlimited mileage warranty. In addition, you can purchase extended service coverage up to five years/500,000 miles. For complete warranty detail see your authorized DDC distributor or dealer.

Series 60
24 Hour Hot Line
Phone 1-800-445-1980

DETROIT DIESEL® CORPORATION

13400 Outer Drive, West / Detroit, Michigan 48239-4001
Telephone: 313-592-5000
FAX: 313-592-7288

DETROIT DIESEL ISO CERTIFIED ORGANIZATION 9001 CORPORATION

Detroit Diesel® and the spinning arrows are registered trademarks of Detroit Diesel Corporation
6SA303 9504 As technical advancements continue, specifications will change. Litho in U.S.A

JAKE BRAKE®

INSTALLATION

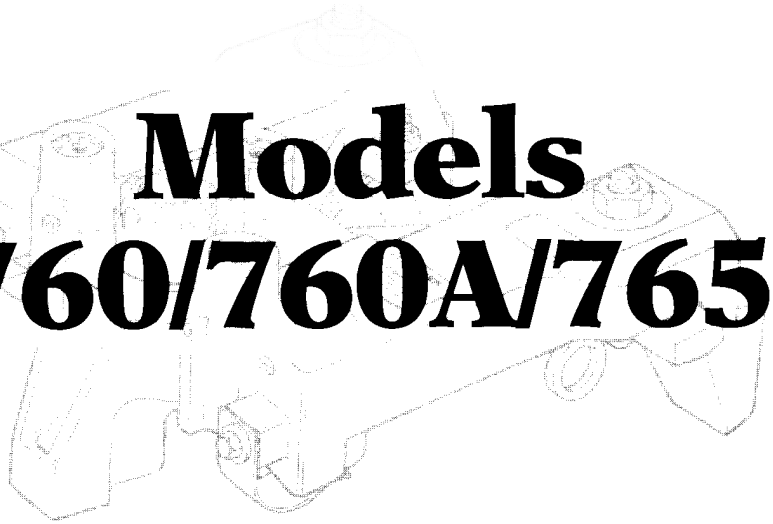

Models 760/760A/765

The Models 760/760A/765 Jake Brake® engine retarders are designed and approved for use on Detroit Diesel® Series 60® engines. For specific engine application information, see page 4 of this manual. information in this manual was current at the time of printing and is subject to change without notice or liability.

Jacobs Service Letters should be consulted for additional applications and updated information.

Section 1: Introduction

Housing Identification

The model, part number and serial number (A) are located on the nameplate at the top of each housing (see Fig. 1).

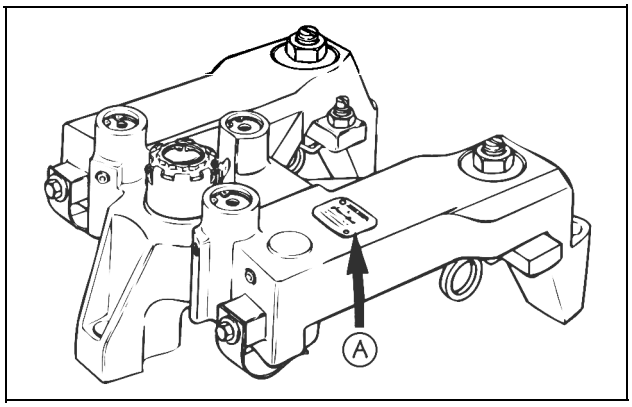

FIG. 1

Engine Identification

Engine model identification, serial number (A) and model number (B), is on the name tag located on the side of the valve cover and stamped on the cylinder block beneath the intake manifold (see Fig. 2).

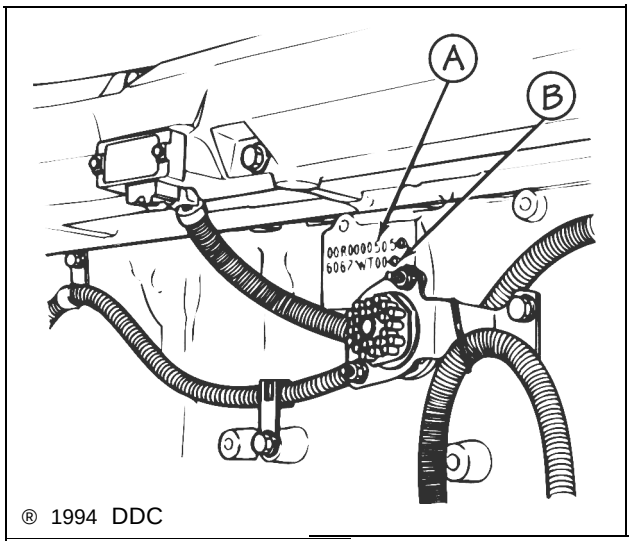

FIG. 2

Special Tools

General

15 mm -12 point Socket
12 mm -12 point Socket
3/1 6“ Hex Wrench

Kent Moore

Expander Tool	P/N J-36347
Injector Height Gage	P/N J-35637A

Detroit Diesel

Series 60 Engine Service Manual

Jacobs

Feeler Gage, 0.020” (0.508 mm)	P/N 017278
Feeler Gage, 0.026” (0.660 mm)	P/N 017671

Recommended Torque Values

Housing Hold-down Cap Screws	100 lb.-ft. (136 N•m) (lubricated with engine oil)
Slave Piston Adjusting Screw Locknut	25 lb.-ft. (35 N•m)
Slave Piston Leveling Screw Locknut	35 lb.-ft. (47 N*m)
Solenoid Valve	110 lb.-in. (12.4 N•m)
Master Piston Spring Cap Screw	100 lb.-in. (10 N•m)

Engine Covers

The engine brake has been designed to fit on the Series 60 engine with no additional valve cover spacers. There are three styles of valve covers for the Series 60 engine. On engines equipped with a two-piece aluminum valve cover, it is NOT necessary to remove the lower valve cover to install the engine brake. However, one style upper valve cover may require modification at the breather housing location (inside) for engine brake clearance. See pages 20-21 for styles and instructions.

Section 2A: Engine Preparation Series 60 Engines with DDEC II

Clean the engine thoroughly and remove the rocker cover and gasket. Note the location of the rocker arm shaft (A), the exhaust valve rocker arm (B), the fuel injector rocker arm (C), and the intake valve rocker arm (D) (see Fig. 3).

NOTE:

IF THE ENGINE IS EQUIPPED WITH AN ALUMINUM TWO-PIECE VALVE COVER, REMOVE ONLY THE UPPER VALVE COVER TO INSTALL THE ENGINE BRAKE.

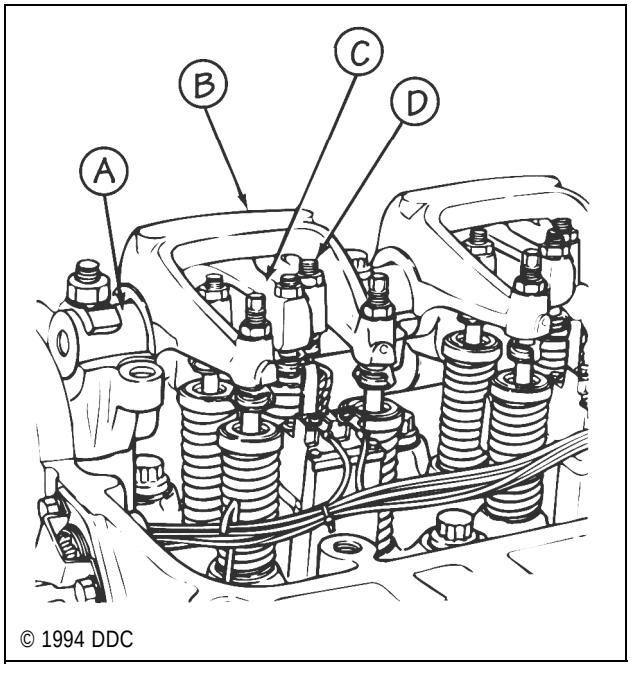

© 1994 DDC

FIG. 3

Undercover Wire Harness Installation

Before installing the engine brake housings, install the undercover wire harness (see Fig. 4). Letters in the illustrations refer to specific components explained in detail below.

1. Remove the mounting flange cover (A) for the Electronic Unit Injector (EUI) harness (see Fig. 5).
2. Insert the blue wire and the yellow wire from the wire harness, Jacobs P/N 017393, through two of the access holes in the grommet (B) located at the rear of the cylinder head. Insert wires from outside in.

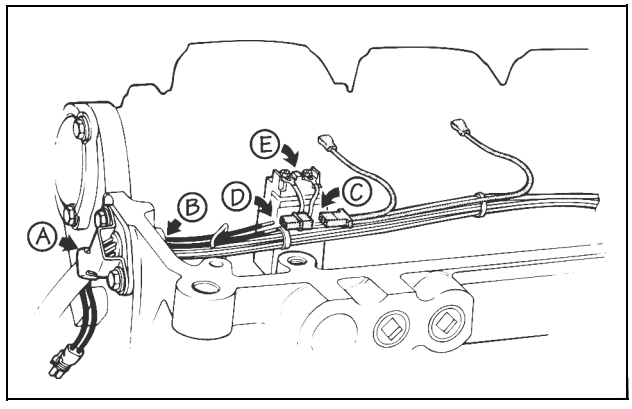

FIG. 4

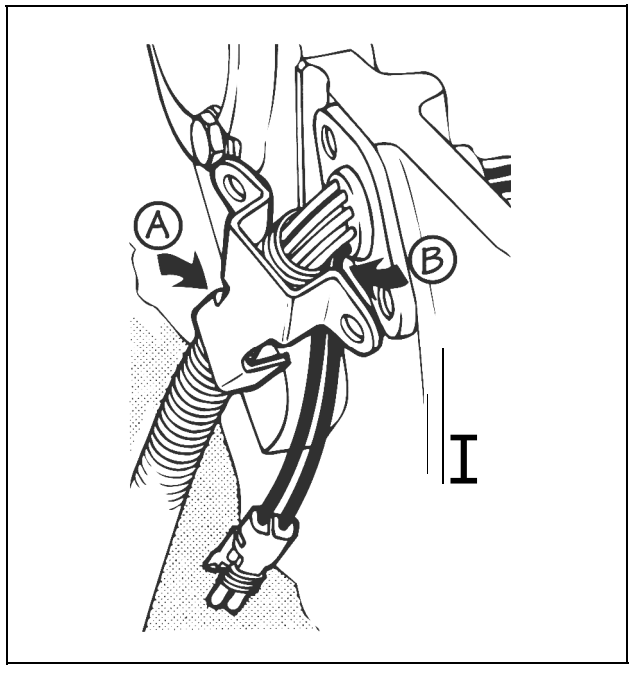

FIG. 5

NOTES:

ONCE THE WIRES ARE INSERTED THROUGH THE GROMMET, THEY CANNOT BE REMOVED DUE TO THE TERMINAL LOCKING TANGS.

TO PREVENT OIL LEAKAGE, APPLY A SMALL QUANTITY OF RTV (OR EQUIVALENT) ON THE OUTBOARD SIDE OF THE GROMMET WHERE THE PLUGS WERE REMOVED FROM THE ACCESS HOLES.

Section 2B: Engine Preparation Series 60 Engines with DDEC III

Clean the engine thoroughly and remove the rocker cover and gasket. Note the location of the rocker arm shaft (A), the exhaust valve rocker arm (B), the fuel injector rocker arm (C), and the intake valve rocker arm (D) (see Fig. 9).

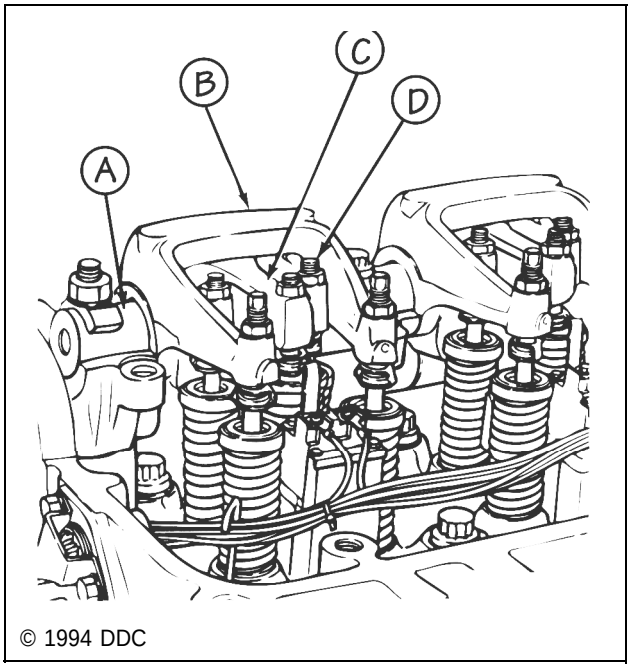

© 1994 DDC

FIG. 9

NOTE:

IF THE ENGINE IS EQUIPPED WITH AN ALUMINUM TWO-PIECE VALVE COVER, REMOVE ONLY THE UPPER VALVE COVER TO INSTALL THE ENGINE BRAKE.

Undercover Wire Harness Installation (Retrofit)

Before installing the engine brake housings, install the undercover wire harness (see Fig. 10). Letters in the illustrations refer to specific components explained in detail below.

1. Remove the mounting flange cover (A) from the Electronic Unit Injector (EUI) harness (see Fig. 11).
2. Insert the blue and yellow wires from the wire harness, Jacobs P/N 020217, through two of the access holes in the grommet (B) located at the rear of the cylinder head. Insert the wires from the outside in.

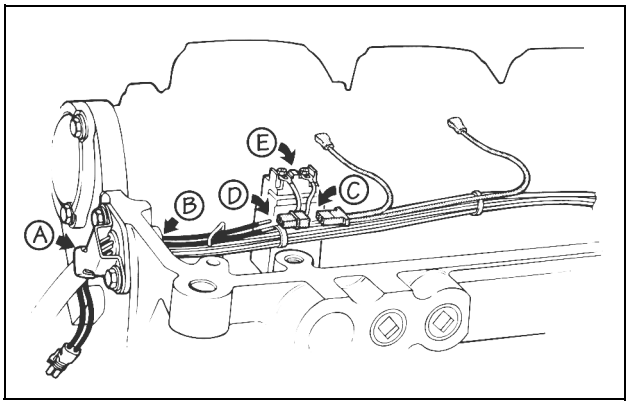

FIG. 10

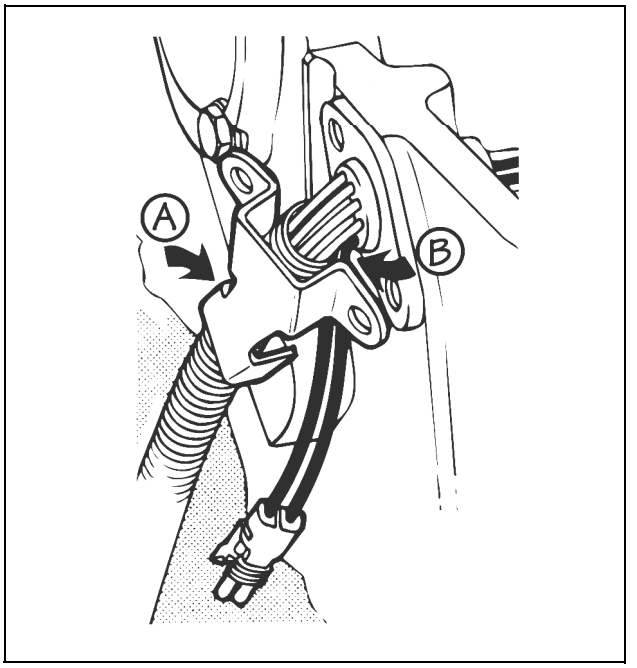

FIG. 11

NOTE:

ONCE THE WIRES ARE INSERTED THROUGH THE GROMMET, THEY CANNOT BE REMOVED DUE TO THE TERMINAL LOCKING TANGS.

TO PREVENT OIL LEAKAGE, APPLY A SMALL QUANTITY OF RTV (OR EQUIVALENT) ON THE OUTBOARD SIDE OF THE GROMMET WHERE THE PLUGS WERE REMOVED FROM THE ACCESS HOLES.

Section 3: Brake Housing Installation

1. Remove the three bearing cap bolts (locations number 2,4 and 6) on the intake manifold side, as shown by the arrows in Fig. 15.

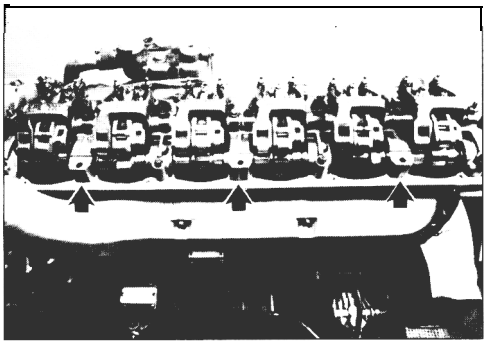

FIG. 15

CAUTION

ATTACH A LENGTH OF TUBING TO A BLOW GUN NOZZLE AND BLOW OUT THE OIL FROM THE BOLT HOLES. COVER THE HOLES WITH HAND TOWELS TO MINIMIZE OIL SPRAY. REMOVING THE OIL FROM THE BOLT HOLES PREVENTS THE CYLINDER HEAD FROM CRACKING WHEN TIGHTENING THE BOLTS.

WARNING

EYE PROTECTION MUST BE WORN WHILE BLOWING THE OIL FROM THE BOLT HOLES. PERSONAL INJURY MAY RESULT IF SAFERY GLASSES ARE NOT WORN.

2. Place the two spacer bars on the exhaust manifold sick of the cylinder head with the “out” markings adjoining each other and facing the exhaust manifold (A) (see Figs. 16 and 17).

3. Place the three engine brake housings over the rocker shafts with the solenoid valves toward the camshaft side of the engine.

NOTE:

BE SURE HOUSINGS DO NOT INTERFERE WITH WIRING HARNESS.

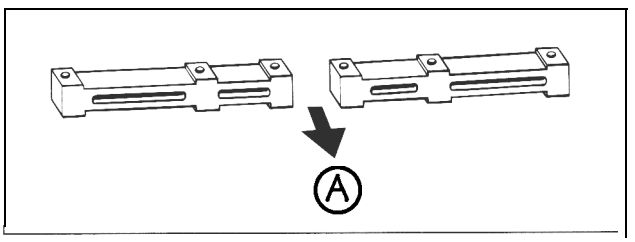

FIG. 16

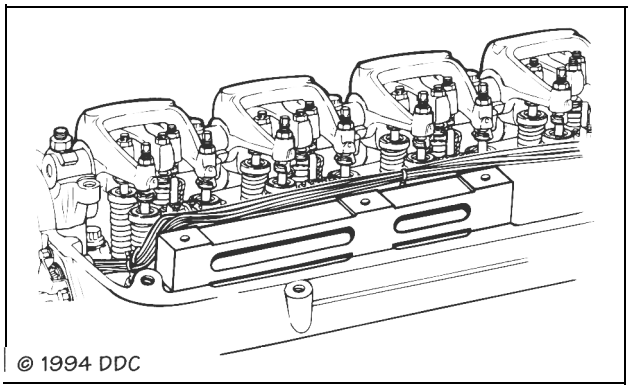

FIG. 17

Model 760 Only

CAUTION

THE MODEL 760 USES TWO LENGTHS OF MOUNTING BOLTS. SIX (120 MM) BOLTS ARE TO BE INSTALLED ON THE EXHAUST SIDE OF THE ENGINE. THREE (110 MM) BOLTS ARE TO BE INSTALLED ON THE CAMSHAH SIDE OF THE ENGINE. FAILURE TO DO SO WILL RESULT IN SERIOUS ENGINE DAMAGE.

4a. Install one washer onto each 4-3/4” (120 mm) long bolt and insert into brake housing on the exhaust manifold side (two per housing) (see Fig. 18).

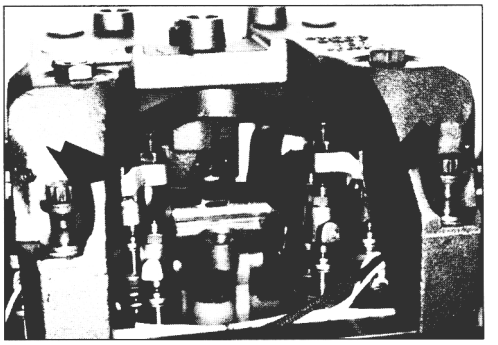

FIG. 10

Install one washer on the 4-3/8” (110 mm) long bolt and insert into brake housing at the camshaft side (one per housing) (see Fig. 19).

2. Place the **correct** feeler gage between the solid side of the **slave piston** (the side without the leveling screw) and the exhaust rocker arm adjusting screw.

3. Turn the slave piston adjusting screw clockwise until a **slight drag** is felt on the feeler gage (see Fig. 22).

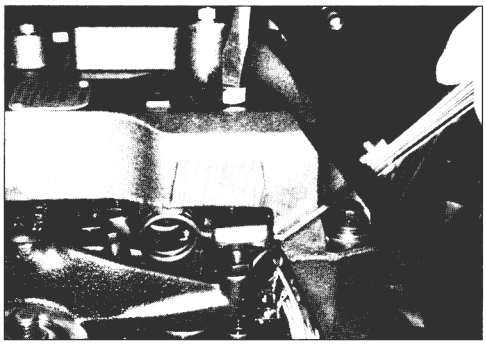

FIG. 22

4. Hold the screw in this position and tighten the locknut to 25 lb.-ft. (35 NŽm). Check the adjustment and repeat if necessary. The slave piston adjusting screws are not to be disassembled.

5. Follow the same procedure and set the same clearance between the slave piston leveling screw and the rocker arm adjusting screw (see Fig. 23).

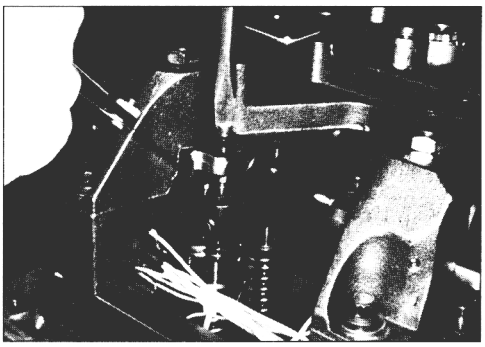

FIG. 23

6. Hold the leveling screw in this position and tighten the locknut to 35 lb.-ft. (47 NŽm). Check adjustment and reset, if necessary.

7. Repeat the adjustment procedures in steps 1 through 6 for the remaining cylinders. Bar over the engine when necessary to put the exhaust valves in the closed position for slave piston adjustment.

Section 4A: Control System Installation Series 60 Engines with DDEC II

Clutch Switch

1. Mount the clutch switch in the most convenient or accessible location possible. Locations may include in the cab under the dash, under the floor wheel well location, or in the area of the bell housing.

2. Install the switch with the switch actuator arm in contact with the clutch pedal arm or other clutch member (see Fig. 24). The optional overtravel bracket (A) is not included in the clutch switch group.

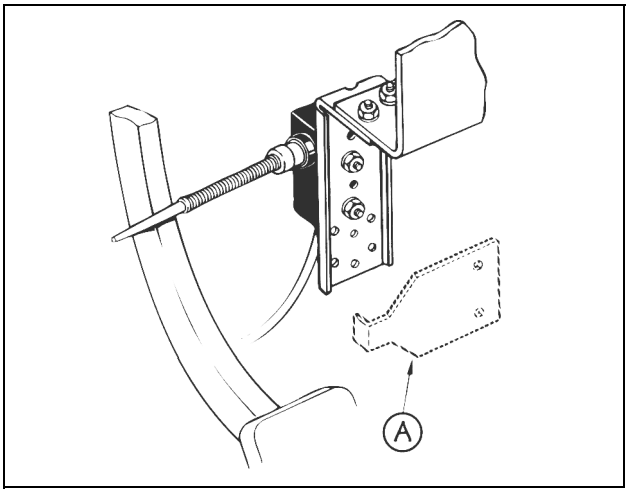

FIG. 24

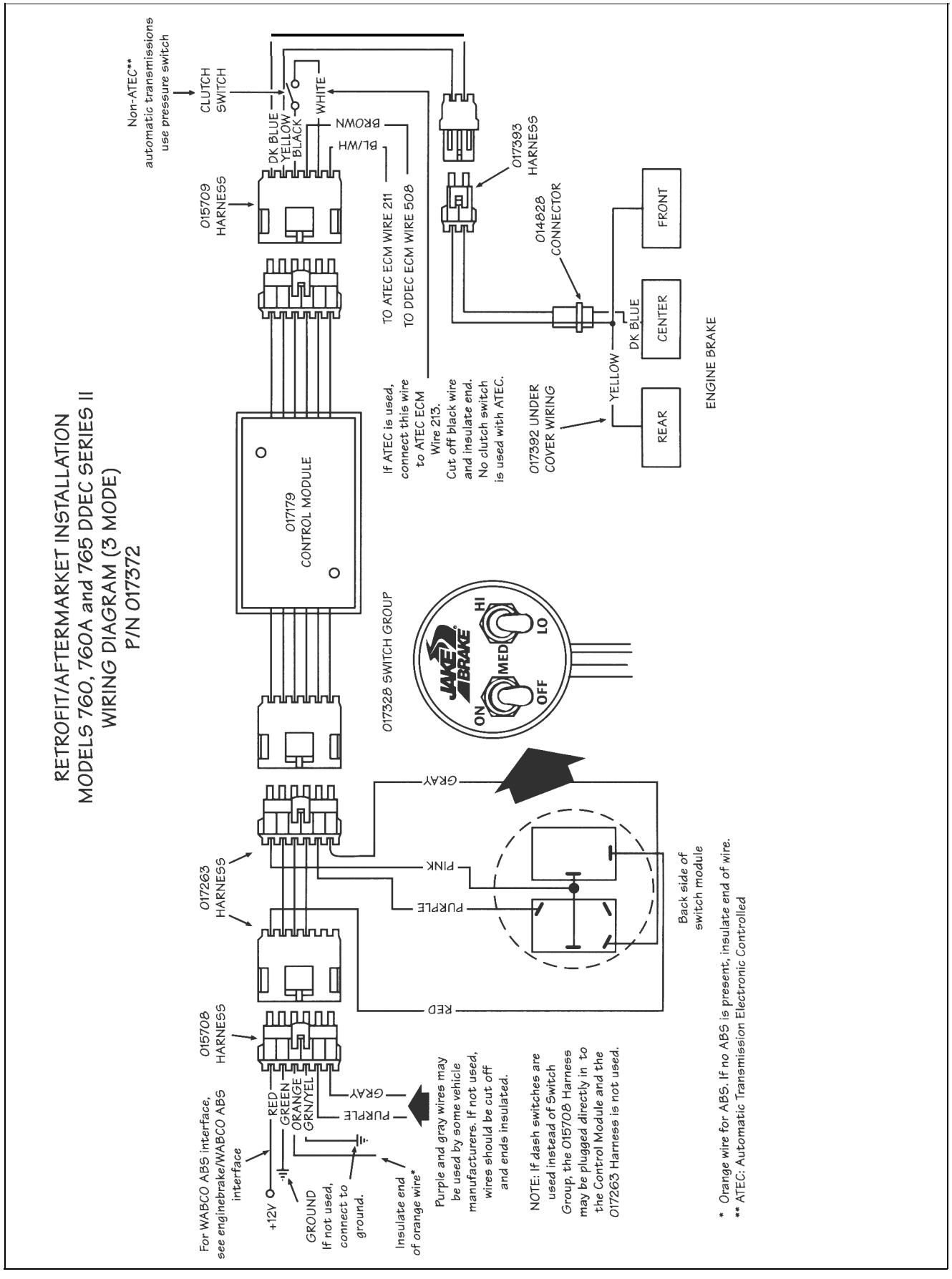
RETROFIT/AFTERMARKET INSTALLATION
MODELS 760, 760A and 765 DDEC SERIES II
WIRING DIAGRAM (3 MODE)
P/N 017372
Non-ATEC** automatic transmissions use pressure switch
CLUTCH SWITCH
DK BLUE
YELLOW
BLACK
WHITE
BROWN
BL/WH
015709 HARNESS
TO ATEC ECM WIRE 211
TO DDEC ECM WIRE 508
017393 HARNESS
014828 CONNECTOR
017179 CONTROL MODULE
If ATEC is used, connect this wire to ATEC ECM Wire 213. Cut off black wire and insulate end. No clutch switch is used with ATEC.
017392 UNDER COVER WIRING
YELLOW
DK BLUE
FRONT
CENTER
REAR
ENGINE BRAKE
017328 SWITCH GROUP
JAKE BRAKE
HI
LO
MED
OFF
ON
GRAY
PINK
PURPLE
017263 HARNESS
Back side of switch module
RED
015708 HARNESS
For WABCO ABS interface, see enginebrake/WABCO ABS interface
+12V
RED
GREEN
ORANGE
GRN/YEL
GRAY
PURPLE
GROUND If not used, connect to ground.
Insulate end of orange wire*
Purple and gray wires may be used by some vehicle manufacturers. If not used, wires should be cut off and ends insulated.
NOTE: If dash switches are used instead of Switch Group, the 015708 Harness may be plugged directly in to the Control Module and the 017263 Harness is not used.
* Orange wire for ABS. If no ABS is present, insulate end of wire.
** ATEC: Automatic Transmission Electronic Controlled

FIG. 20

Refer to the wiring diagrams on the previous pages for the following electrical connections.

Wire Harness

1. Connect the wire harness, P/N 015708, to the Weatherpack® connector on the in-line harness, P/N 017263. Connect the other side of the in-line harness to the Weatherpack connector on the control module.
2. Connect the GREEN wire to the negative (-) battery terminal.

⚠WARNING

IT IS VERY IMPORTANT THAT THE GREEN WIRE BE CONNECTED TO A GOOD GROUND. PROPER OPERATION OF THE JAKE BRAKE ENGINE RETARDER ELECTRICAL CONTROL SYSTEM IS DEPENDENT ON SECURING A GOOD GROUND CONNECTION. THE GREEN WIRE MUST BE ATTACHED TO THE NEGATIVE (-) BATTERY TERMINAL. DO NOT USE BODY BOLTS OR SCREWS ON THE DASH. A POOR GROUND WILL CAUSE INTERMITTENT ENGINE BRAKE OPERATION AND DAMAGE TO THE CONTROL MODULE.

3. Connect the RED wire to a 10-amp circuit breaker that is controlled by the key switch.
4. The ORANGE wire is provided for use on future electronic equipment. For current applications, insulate the end and store the wire.
5. The GREEN/YELLOW wire is also for future use and should be securely connected to the ground.
6. If the optional dash switches are used in place of the Jacobs dash switch assembly, connect the PURPLE and GRAY wires as shown in the wiring diagram for “optional dash switches”.

NOTE:

THE 017263 HARNESS IS NOT REQUIRED WITH THE OPTIONAL DASH SWITCHES. CONNECT THE 15708 HARNESS DIRECTLY TO THE 017179 CONTROL MODULE.

Harness

1. Connect harness, P/N 015709, to the control module.
2. BLUE/WHITE wire: For installations with standard transmissions, insulate the end and store the wire. If an automatic transmission is used, connect the BLUE/ WHITE wire to the ATEC wire number 211.

NOTES:

FOR ALLISON ELECTRONIC TRANSMISSION APPLICATIONS (ATEC), CHECK THAT THE BLUE/WHITE WIRE ON WIRE HARNESS 015709 IS CONNECTED TO ATEC ECM WIRE NUMBER 211.

FOR NON-ELECTRONIC ALLISON AUTOMATIC TRANSMISSION APPLICATIONS, A PRESSURE SWITCH MUST BE USED TO SENSE LOCK-UP IN THE TRANSMISSION. THE PRESSURE SWITCH TAKES THE PLACE OF THE CLUTCH SWITCH. THE BLACK WIRE AND WHITE WIRE SHOULD BE CONNECTED TO THE PRESSURE SWITCH TO SENSE TRANSMISSION LOCKUP.

3. Connect the BROWN wire to the DDEC ECM wire number 508.
4. The WHITE wire and BLACK wire are connected to the clutch switch.
5. The DARK BLUE wire and YELLOW wire are connected to a shroud which connects to the solenoid external wire harness, P/N 017393. The solenoid internal wire harness was installed earlier (see page 6).

Undercover Wiring

Connect the three wires to the solenoid valves.

- Short YELLOW wire to the rear housing.
- BLUE wire to the center housing.
- Long YELLOW wire to the front housing.

NOTES:

THE DDC FACTORY INSTALLED LONG AND SHORT WIRES ARE EITHER RED OR WHITE. THE JACOBS WIRES ARE YELLOW AND BLUE.

A TWO-HOUSING JAKE BRAKE INSTALLATION WILL HAVE ONE YELLOW AND ONE BLUE WIRE. THE YELLOW WIRE SHOULD BE CONNECTED TO THE REAR HOUSING, AND THE BLUE WIRE SHOULD BE CONNECTED TO THE FRONT HOUSING (SEE FIG. 29, PAGE 14).

Store any excess wire along the injector wire harness and secure with plastic wire ties.

SECTION 02: CLUTCH

CONTENTS

1. CLUTCH....02-2

1.1 Description....02-2

2. CLUTCH ADJUSTMENT....02-2

2.1 Clutch Pedal Adjustment....02-2

2.2 Internal Clutch Adjustment....02-3

2.3 Free Travel Setting....02-4

2.4 Air Pressure Regulator....02-4

3. RENEW CLUTCH HYDRAULIC LINE....02-4

3.1 Bleeding....02-4

3.2 Filling....02-5

4. LUBRICATION....02-5

5. PNEUMATIC AIR LINE FILTER....02-5

6. TROUBLESHOOTING....02-6

7. SPECIFICATIONS....02-8

LIST OF ILLUSTRATIONS

FIG. 1: FREE PLAY ADJUSTMENT....02-3

FIG. 2: RELEASE TRAVEL AND FREE PLAY TRAVEL ADJUSTMENT....02-3

FIG. 3: SQUARE HEAD BOLT....02-3

FIG. 4: CLUTCH INSTALLATION....02-4

FIG. 5: AIR PRESSURE REGULATOR....02-4

FIG. 6: SERVO UNIT....02-5

1. CLUTCH

1. Description

Vehicles equipped with a manual transmission are provided with the "Spicer" Angle-Spring clutch. The clutch assembly consists of a 15.1/2" dry disc two-plate model. It is a pull-type design with riveted organic wear surface facing on driven discs. It is manually adjustable to compensate wear, hydraulically operated and pneumatically assisted. A torque limiting clutch brake as well as a positive separator pin system are also provided. One type of clutch is installed regardless of transmission (6 or 7 speeds).

Refer to the Spicer, Service manual annexed to the end of this section for the following subjects:

• Transmission Removal

Note: *For more details, refer to Section 07 "TRANSMISSION".*

Note: *Disconnect the clutch operating cylinder external linkage and remove cylinder assembly (without disconnecting hydraulic hose), to permit the release yoke to turn up and pull free of the release bearing thrust pads, then disconnect the transmission shift linkage.*

• Clutch Removal
• Engine and Transmission Alignment (Inspection)
• Clutch Installation
• Transmission Installation

Note: *For more details, refer to Section 07 "TRANSMISSION".*

Note: *Position the torque limiting clutch brake on the main drive gear of the transmission, then shift transmission into gear so that the input shaft can be rotated during assembly to align with clutch-driven disc hub splines.*

Note: *Rotate clutch release bearing housing so that flat section is on top.*

Note: *Rotate clutch release yoke so that release yoke fingers clear the pads on the release bearing housing. Use a suitable transmission jack to support and maintain the engine-to-transmission alignment while installing the transmission. Use care to avoid having the weight of the transmission bearing on the clutch or forcing the transmission into the clutch or flywheel housing. Such abuse can cause bent or "sprung" driven discs and prevent the clutch from releasing. Rotate clutch release yoke into proper position as transmission is moved into place.*

Note: *Start all transmission bell housing cap screws and tighten progressively around the housing to 45 lbf ft (61 N m).*

Note: *Connect the transmission shift linkage. Install the clutch operating cylinder and its linkage, then proceed with the clutch adjustment in accordance with paragraph "2.* CLUTCH ADJUSTMENT".

2. CLUTCH ADJUSTMENT

Note: *if for any reason, air is present inside clutch hydraulic line, bleed clutch in accordance with paragraph "*3.1. BLEEDING*"*

2.1 Clutch Pedal Adjustment

Adjust clutch pedal as follows:

1. Free play adjustment is made by loosening nut (1, Fig. 1) and moving bolt in slot. The pedal moves down allowing a 1/4" (6 mm) of **free play** before the master cylinder (5, Fig. 1) starts to move.

2. Keep this adjustment by tightening nut (1, Fig. 1).

3. Push the clutch pedal until the master cylinder piston touches the cylinder bottom.

4. Loosen the adjustment bolt (2, Fig. 1) until it touches the pedal wall support (3, Fig. 1).

5. Loosen the adjustment bolt (2, Fig. 1) for another 1-1/2 turn. Lock in position by tightening nut (4, Fig. 1).

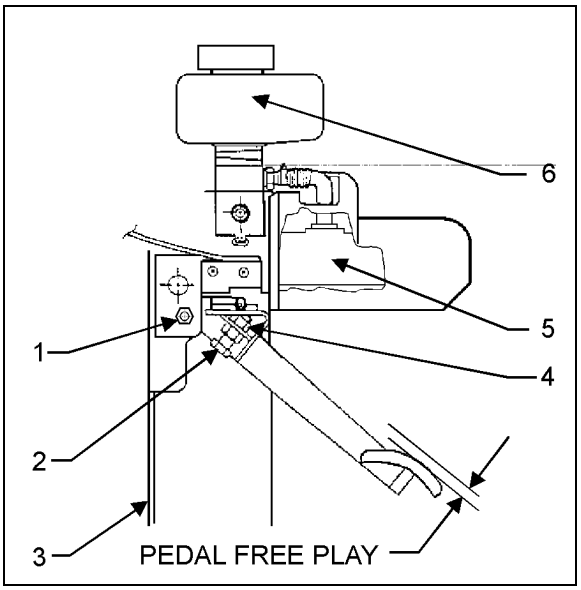

FIGURE 1: FREE PLAY ADJUSTMENT OEH3B716

Note: *Clean reservoir internal pieces with jet air to eliminate dirt.*

2.2 Internal Clutch Adjustment

1. Remove inspection cover at bottom of clutch housing (Fig. 4).

2. Measure the **release travel** (clearance between release bearing housing and clutch brake). Refer to figure 2. The clearance should be between 1/2" and 9/16" (13 and 14 mm).

3. If clearance is incorrect, release the clutch by depressing the clutch pedal to end of pedal travel. Insert a 3/4" socket (12 points) or a 3/4" box-end wrench through inspection hole (Fig. 4). Depress square-head bolt to adjust clutch (Fig. 3). The "Kwik-Adjust" will re-engage at a quarter of a turn. The flat surface on the bolt head will align with the flat edge of the bracket.

Note: *If clearance between release bearing housing and clutch brake is less than 1/2" (13 mm), rotate the adjusting ring counterclockwise to move the release bearing towards the engine. If clearance is greater than 9/16" (14 mm), rotate the adjusting ring clockwise to move the release bearing towards the transmission.*

4. Ensure *"Kwik-Adjust"* is engaged in the locked position. Release the clutch pedal to engage clutch.

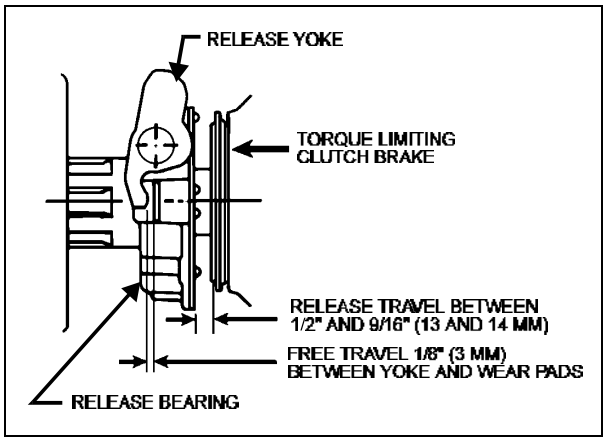

MA3E0223

FIGURE 2: RELEASE TRAVEL AND FREE PLAY TRAVEL ADJUSTMENT

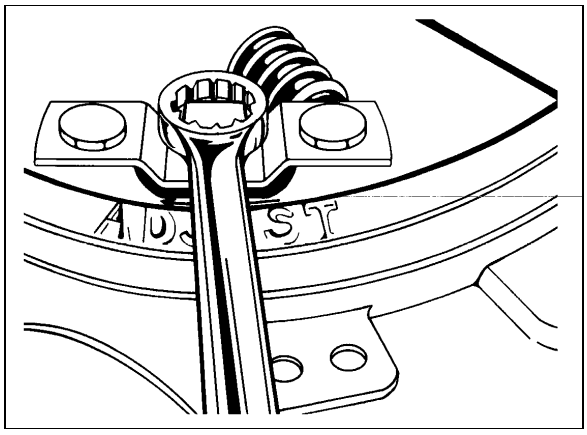

FIGURE 3: SQUARE HEAD BOLT MA3E0224

2.3 Free Travel Setting

1. Check **free travel** as shown in figure 2. The clearance should be 1/8" (3 mm).

2. If clearance is incorrect, adjust bolt until it touches the shaft lever and locks in position with nut (Fig. 4).

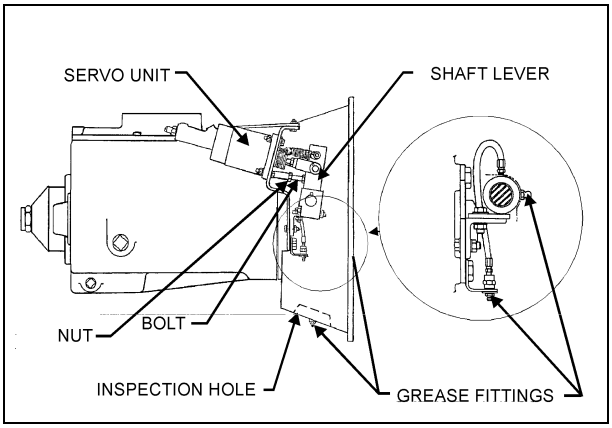

FIGURE 4: CLUTCH INSTALLATION 02001

Note: *The return springs do not require any tension adjustment.*

2.4 Air Pressure Regulator

The air pressure regulator is located in engine R.H. side door (Fig. 5). To adjust, remove dust cap from regulator. Attach a pressure gauge to port. Loosen adjusting screw lock nut. Turn screw to **adjust pressure to 40 psi (275 kPa)**. Tighten lock nut, then reinstall dust cap. Refer to Section 12, BRAKE AND AIR SYSTEM under paragraph "8. PRESSURE REGULATING VALVES".

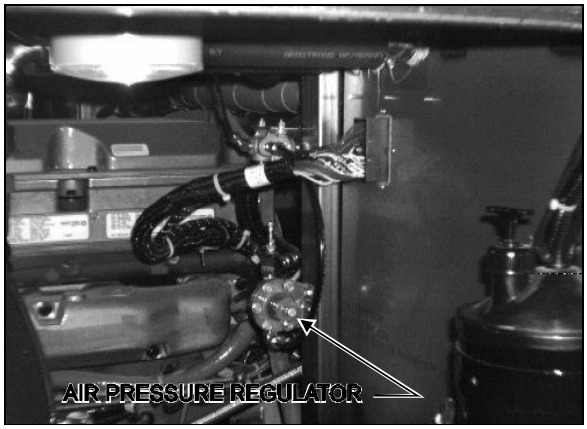

FIGURE 5: AIR PRESSURE REGULATOR 02003

3. RENEW CLUTCH HYDRAULIC LINE

3.1 Bleeding

The clutch hydraulic system must be bled whenever air enters it. Unlike hydraulic fluid, air is compressible. This means that instead of transmitting pedal pressure through the hydraulic line, the master cylinder will compress air in the line. This results is a spongy feel in the pedal, incomplete clutch disengagement and hard shifting.

Note: *Two people are required to bleed air from the hydraulic lines. One to operate the clutch pedal and the other to open and close the bleed valve.*

Warning: *Wear safety glasses during the following operation.*

1. Locate the bleed valve mounted at the end of servo unit. Remove dust cap (Fig. 4 and 6).

2. Attach a plastic tube to the bleeding valve (Fig. 6). Dip the other end of the tube in a jar containing several inches of clean brake fluid.

Note: *Do not allow the end of the tube out of the brake fluid during bleeding. This could allow air into the hydraulic system, requiring that the bleeding procedure be done over.*

3. Press the clutch pedal as far as it will go 2 or 3 times, then hold it down.

4. With the clutch pedal down, open the bleeding valve until the pedal goes to the floor, then close the bleeding valve. Do not let the pedal up until the bleeding valve is closed.

5. Let the pedal back up slowly.

6. Repeat steps 4-6 until the fluid entering the jar is free of air bubbles.

Note: *If after pumping the clutch pedal the system does not bleed, open the bleeding valve and blow air under pressure inside the master cylinder reservoir until system has been completely bleeded. Then perform the filling procedure.*

3.2 Filling

1. Remove the master cylinder reservoir cap.

2. Slightly loosen teflon flexible hydraulic hose connector from adaptor mounted on extremity of servo unit (Fig. 6).

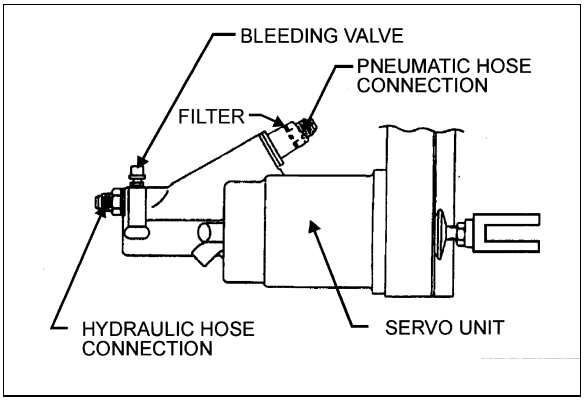

FIGURE 6: SERVO UNIT 02002

3. Remove the plastic tube on the bleeding valve. Make sure the bleeding valve is open. Force fluid (meeting DOT 3 specifications) through the bleeding valve opening. Tighten teflon flexible hose connector when fluid is free of air bubbles. Continue to force brake fluid until it enters master cylinder reservoir and flows free of air bubbles.

Note: *A 40 psi (275 kPa) pressure allows filling hydraulic line in reasonable time.*

4. Tighten bleeding valve and reinstall dust cap.

5. Fill master cylinder reservoir.

6. Install the master cylinder reservoir cap

Note: *To make the filling procedure easier to perform, the reservoir support may be unbolted and reservoir moved closer to you.*

Caution*: Never re-use brake fluid which has been bled from the system. Discard old brake fluid and use a fresh supply.*

4. LUBRICATION

The clutch components should be lubricated every 6,250 miles (10 000 km) or twice a year, whichever comes first (refer to previous Fig. 4 to identify the clutch component grease fittings). The clutch release bearing (one grease fitting) and the clutch control cross shaft (three grease fittings, two on the operating cylinder side and one on the other side) should be lubricated with a good quality lithium-based soap or equivalent E.P. grease meeting N.L.G.I. grades 1 or 2.

5. PNEUMATIC AIR LINE FILTER

The pneumatic air line filter should be cleaned every 6,250 miles (10 000 km) or twice a year, whichever comes first (Fig. 6). The filter is mounted inside servo unit pneumatic branch.

To clean the filter :

1. Remove pressure in the pneumatic air line. Refer to paragraph "2.4 AIR PRESSURE REGULATOR" in this section.
2. Remove the pneumatic hose connection from servo unit pneumatic branch.
3. Unscrew the filter.
4. Clean the filter.

6.TROUBLESHOOTING

Poor Clutch Release or Poor Engagement	
Probable cause	**Corrective action**
Clutch adjustment incorrect.	Recheck adjustment as per instructions.
Air in clutch hydraulic line.	Bleed clutch hydraulic line as per instructions.
Flywheel pilot bearing too tight in flywheel or on end of drive gear.	Free pilot bearing with a light push. If bearing is rough, replace it.
Damage clutch release bearing.	Replace bearing. Lubricate with recommended lube.
Clutch release shaft projecting through release yoke.	Relocate release shaft so that it does not Check bell housing bushing and release yoke for wear.
Release yoke contacting cover assembly at full release position.	Replace release yoke with proper yoke.
Release yoke not aligned properly with release bearing.	Check flywheel. Probably has been resurfaced more than the 0.060" (1,52 mm) recommended.
Intermediate plate sticking on drive lugs	Check that drive pins are 90° square to flywheel surface and that there is a minimum .006” (0,152 mm) clearance between drivepins and intermediate plate slots.
Pressure plate not retracting.	a. Check pressure plate drive lugs for (0,152 mm) clearance. b. Check pressure plate return springs for proper tension. c. Check amount of release travel. d. Lever nose out of groove.
Driven disc distorted.	Should be straight within 0.015" (0,381 mm). Replace if distortion cannot be corrected.

Poor Clutch Release or Poor Engagement (contd.)	
Probable cause	**Corrective action**
Worn splines on drive gear of transmission.	Check drive gear and driven disc hubs for excessive wear.
Disc facings gummed with oil or grease.	Replace facings or entire disc. Cleaning not recommended. Check for leak causing
Broken intermediate plate.	Replace entire intermediate plate/driven disc assembly. Damage such as this is almost caused by abusive use of clutch.
Clutch Slipping	
Probable Cause	**Corrective action**
Pedal has no free play	Re-adjust as per instructions.
Release mechanism binding.	Check release mechanism and linkage. Lube if necessary.
Worn clutch facings.	Replace facings or complete disc, if necessary.
Grease or oil on facings.	Replace facings.
Weak pressure springs.	Replace springs
Overloaded clutch	Check to assure that proper clutch has been specified.
Noisy Clutch	
Probable Cause	**Corrective action**
Clutch release bearing dry or damaged.	Lubricate bearings or replace.
Flywheel pilot bearing dry or damaged.	Lubricate bearings or replace.
Clutch release bearing housing striking flywheel ring.	Adjust clutch. Also check wear on cross shafts, bell housing bushings and release yoke fingers. Replace if necessary.
Improper clearance between drive slots and drive. lugs on pressure plates.	Clearance should be at least 0.006" (0,152 mm).

7. SPECIFICATIONS

Clutch Adjustment

Pedal free play ..... 1/4 ±1/8" (6±3 mm)
Internal clutch adjustment ..... between 1/2-9/16" (13-14 mm)
Free travel setting ..... 1/8" (3 mm)
Clutch brake setting (between stopper and adjusting bolt) ..... between 1/4-3/8" (6-9 mm)

Clutch Assembly

Make ..... DANA Corp. (Spicer)
Supplier number 108391-78
Prevost number 520147
Model ..... Easy Pedal
Type ..... Dry, two-plate, pull-type, manually adjustable (Kwik- Adjust)
Size ..... 15 1/2" (394 mm)
Plate Load Capacity ..... 4000 lbs (17 792 N)
Maximum Torque Capacity ..... 1450 lbf•ft (1966 N•m)
Disc Facing Thickness 0.487/0.452
Hub Spline Size (No. splines) ..... 2" (10)
Disc Assembly Max. Runout (T.I.R.) ..... 0.015" (0,381 mm)
Disc Assembly Max. Out-of-Flat ..... 0.020" (0,508 mm)
Release Sleeve Bushing Dia. (new) ..... 2.010/2.008" (51,054/51,003 mm)
Intermediate Plates, driving lugs to slot clearance (new min.) ..... 0.006" (0,152 mm)
Intermediate Plates, driving lugs to slot clearance (max. worn) ..... 0.015 to .021" (0,381 to 0,508 mm)
Pressure Plates, driving lugs to slot clearance (new) ..... 0.003 to .010" (0,076 to 0,254 mm)
Pressure Plates, driving lugs to slot clearance (max. worn) ..... 0.016/.021" (0,406/0,533 mm)
Intermediate Plates & Pressure Plates: Out-of-Flat ..... 0.000 to .004 Concave (0,000 to 0,102 mm)
Scoring - Max. depth that can be re-used ..... 0.015" (0,381 mm)
Release Sleeve Retainer, driving lugs to slot clearance (max. worn) ..... 0.020" (0,508 mm)
Maximum Engine RPM 2600

Master Cylinder

Make ..... Kongsberg Automotive
Supplier Number 624409-P01
Prevost Number 520139

Operating Cylinder (slave cylinder)

Make ..... Kongsberg Automotive
Supplier Number 624410-P01
Prevost Number 520138

The Spicer System

SERVICE MANUAL

EASY-PEDAL™ CAST PULL-TYPE CLUTCHES



SPICER®

DANA

TABLE OF CONTENTS

TABLE OF CONTENTS

Purpose and function of a clutch 2
General Description 2
Advantages of Spicer Easy-Pedal Clutches 3
Clutch Selection Data 4
Driven Discs 5
Clutch Removal & Inspection 7
installation of 14''Clutch **10**
Installation of 15 l/2'' Clutch 13
Re-installing Transmission 16
Adjusting Procedures 17
Lubrication 19
Dimensional Checklist 20
Trouble Shooting 21
Parts identification 14' 23
Parts Identification 15 1/2" 24
14'' Flat Flywheel Clutch 25

PURPOSE AND FUNCTION OF A CLUTCH

The purpose of a clutch is to transfer the power from the engine to the transmission which may be either stationary (getting started) or rotating at a different speed (upshifting or downshifting). The clutch has performed its function when both engine and transmission are rotating at the same speed.

To perform this function, clutches are provided with discs which are designed to slip for a short period of time. As spring pressure is applied, they stop slipping and rotate at the same speed as the engine.

SPICER" EASY-PEDAL™ CLUTCHES

The "Spicer System" means matching the right clutch with the "right" drivetrain components. Start with a Spicer Easy-Pedal Clutch and select the options which will keep your equipment running smoothly-day in, day out.

Spicer's 14" and 15 1/2" Easy-Pedal Clutches are available for use on Class 8 trucks with engines up to 600 hp (refer to Maximum Torque Capacity chart on the next page) for specific models/applications.

The Easy-Pedal Clutches are the most advanced clutches in the industry.

Both clutches (14' and 15 1/2") offer these advantages:

- Lower pedal effort/bearing load
- Smooth engagement
- Maximum ventilation for cooler operation
- Simplified adjustment
- Direct interchangeability

BENEFITS OF THE SPICER EASY-PEDAL" KWIK-ADJUST"

Spicer's Kwik-Adjust is a manual adjusting, easy lock component included on Spicer's 14" and 15 1/2" 2-plate pull-type clutches. It allows quick adjustment, is easy to reach and has no bolts to remove.

GENERAL DESCRIPTION

As seen in the exploded view, (Fig. 1) the major components of the Spicer Easy-Pedal Clutch are the cover assembly and two driven discs separated by an intermediate plate. They are pull-type clutches of the dry disc design, adjustable, and have centrally located springs isolated from the heat of the pressure plate. Dampened driven discs (with springs) and ceramic facings (shown here) are considered standard and are recommended for most applications. Driven discs with solid centers (rigid) are available **but not recommended.**

In the 14" 2-plate models, the intermediate plate separating the driven discs is driven inside a "pot-type" flywheel and mounted on six drive pins in the flywheel itself.

In the 15 1/2" 2-plate models, the intermediate plate separating the driven discs is driven by four lugs within the clutch cover assembly. The cover assembly is mounted on a flat type flywheel.

In all models, attached to the cover assembly are four return springs to retract the pressure plate when the clutch is disengaged.

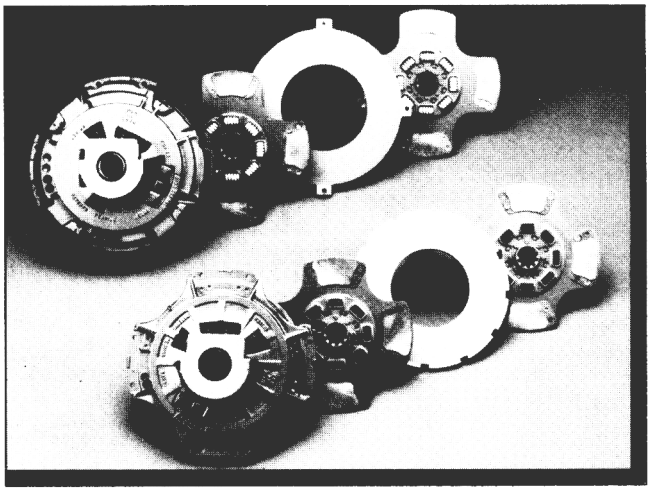

FIGURE 1

This Service Manual is provided to help you obtain best value and longest life from Spicer Easy-Pedal Clutches; both 14" and 15 1/2" models.

WHY SPICER"14° AND 15 1/2" EASY-PEDAL" CLUTCHES ARE THE INDUSTRY STANDARD:

The Easy-Pedal design decreases pedal effort as much as 50% by use of assist springs and increases facing life up to 25% more than other pull-type clutches. With regular maintenance you can always be sure of constant pressure plate load, regardless of age or wear, because of the precise angle of Spicer's rugged angular-spring design.

Spicer clutches will last hundreds of thousands of miles if properly installed, used and maintained. They are designed and built to withstand rugged use.

EXCESS FRICTION HEAT, A CLUTCH'S WORST ENEMY

Almost every early failure of a clutch can be traced to excess friction heat - all of which can be prevented by proper operation and maintenance. Here's how:

Do not "ride or s/ip" the chdch. Once a clutch is fully engaged, there is no heat generated and little or no wear. However, during the brief period when the clutch is picking up the load, considerable heat is generated. By riding or slipping the clutch, the period of partial engagement is lengthened - causing unnecessary heat and wear.

Always start in the proper gear Obviously, an empty vehicle can be started in a higher gear than a fully loaded one. But starting in a gear too high for the load can cause clutch slippage, too much heat and unnecessary wear. Drivers should be trained to use a gear low enough to prevent excess wear on the clutch. *A gear that will start the vehicle moving with the engine at idle speed is usua//y correct.* If the engine must be rewed up to prevent stalling, the gear selection is too high.

Do not shift unti/ vehic/e has reached proper speed. Upshifting before the vehicle has reached the right speed is almost as bad as starting off in too high a gear. When the difference between the vehicle speed and the engine speed is too great, the clutch is forced to slip. The result is extra heat and wear.

Match the ch.dch to the vehic/e and the job. Improper specification may result in a clutch too light-duty for the job it must perform, resulting in early burn-out. It may be a perfectly good clutch when used in the application for which it was designed, but totally inadequate for heavy-duty use. Mismatching the clutch to the vehicle is not only bad for the clutch, it can cause early wear on the whole drivetrain.

Never hold a vehicle on a hill with the clutch. To hold on a hill with the clutch requires that the clutch be purposely slipped. By doing this, enough heat can be generated to burn up the clutch.

Never coast with the clutch disengaged. This can cause clutch failure by the very high RPM encountered when coasting in gear with the clutch released. In this situation, the rear wheels are driving the disc through the multiplication of the rear axle and transmission ratios. This can result in over 10,000 RPM, beyond the burst strength of the facing material. Something as simple as coasting down an unloading ramp can burst a driven disc.

Never engage the c/utch whi/e coasting. This should not even have to be said, since responsible drivers should never coast with clutch disengaged. Re-engaging a clutch after coasting causes tremendous shock to the clutch and the whole drivetrain. It can result in internal engine damage and/or clutch and flywheel failure.

Always report unusual clutch operation promptly Proper maintenance, performed on time, will greatly extend the life of the clutch. The driver should report any change in free pedal (free travel), slippage or any strange "feel" to the clutch operation.

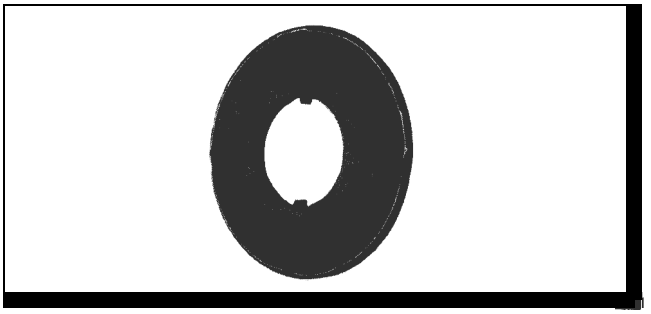

TORQUE-LIMITING CLUTCH BRAKE:

The Spicer Torque-Limiting clutch brake not only helps lengthen the life of your transmission, it has a long life of its own. And, drivers will shift easily into first or reverse, without transmission-damaging gear clash. A must for all heavy-duty unsynchronized transmissions with pull-type clutches, the Spicer Torque-Limiting clutch brake has a self-contained torque limiting feature which eliminates the need for special transmission bearing caps.

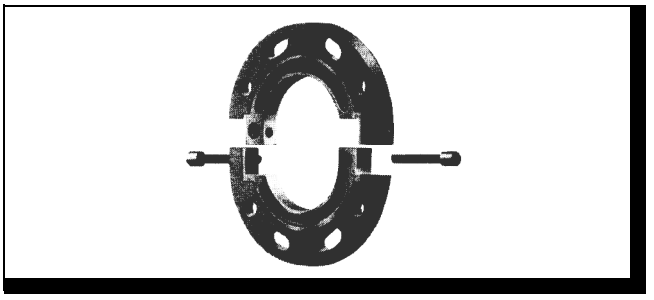

KWIK-KONNECT ™TWO-PIECE CLUTCH BRAKE

The Spicer Kwik-Konnect Two-Piece Clutch Brake has been designer to provide effortless engagement when shifting into reverse, low and/or first gears while the truck is at a standstill. Kwik-Konnect installs easily and provides cooler operation than competitive clutch brakes.

The proper match of a clutch to a vehicle should be made by using the formula below, which takes into consideration the vehicle's gross weight, the engine, transmission, rear axle and tires. All of these combined are called the Gradeability Factor. For adequate clutch life the vehicle must have a Gradeability Factor of at least 15%. Less than this puts undue stress on the clutch. Here's how to figure it.

$$\text{Gradeability (\%)} = \frac{867 \times T \times R}{r \times GCW} - Rrg$$

T - Gross engine torque in lbs. ft.

R - Axle ratio x transmission ratio (first gear)

Rrg - Rolling resistance in equivalent grade percent

(See Chart Below)

r - Rolling radius of tires

GCW - Gross combination weight in pounds

ROLLING RESISTANCE

	Road Surface	Equivalent Grade%
CONCRETE	Excellent	1
	Good	1.5
	Poor	2
ASPHALT	Good	1.25
	Fair	1.75
	Poor	2.25
MACADAM	Good	1.5
	Fair	2.25
	Poor	3.75
COBBLES	Ordinary	5.5
	Poor	8.5
SNOW 2 inches	2 inches	2.5
	4 inches	3.75
DIRT Smooth	Smooth	2.5
	Sandy	3.75
MUD	.....	3.75 to 15

SPICER® 14" EASY-PEDAL" FLAT FLYWHEEL CAST-IRON CLWCH FOR STANDARD 15 1/2" FLYWHEELS.

Spicer offers a 14" Cast-Iron Flat Flywheel Clutch (Fig. 2) that will fit the same flywheel as existing 15 1/2" clutches. Only the Spicer 14" Easy-Pedal Flat Flywheel Clutch offers the following benefits:

- Maximum engine torque rating of 1400 lbs. ft.
- Improved ventilation and heat dissipation over pot-type clutches
- Standardizes flywheels of fleets
- Greater heat sink—thicker pressure plate and intermediate plate are able to absorb more heat
- Best possible engagement characteristics through the use of the ceramic Super Buttons
- Lug Drive
- Spicer Angle-Spring design/reliability
- Positive Separator

CLUrCH CAPACITY

Using the same gross engine torque as used in the previous formula, you can select a clutch using the Clutch Capacity Selection Chart. For safety, please note these speed limitations:

14" clutch - Maximum engine speed 3300 RPM
15 1/2" - Maximum engine speed 2600 RPM

CLUTCH CAPACITY SELECTION CHART FOR 2-PLATE CLWCHES

Size	Clutch Plate Load-Lbs.	Cover Assy. Spring Color Code	Facing	Recommended* Max. Engine Torque - Lbs. Ft.
14"	2800	Red	Organic	820
14"	2800	Red	Ceramic (3 buttons)	1000
14"	3200	Plain	Oroanic	1000
14"	2800	Red	Super-Duty Ceramic (4 buttons)	1250
14"	3200	Plain	Super-Duty Ceramic (4 buttons)	1400
14"	3600	Yellow	Organic	1150
15 1/2"	2800	Red	Organic	940
15 1/2"	2800	Red	Ceramic	1200
15 1/2"	3200	Plain	Organic	1070
15 1/2"	3200	Plain	Ceramic	1400
15 1/2"	3600	Yellow	Organic	1250
15 1/2"	3600	Yellow	Ceramic	1650
15 1/2"	4000	White	Organic	1400
15 1/2"	4000	White	Organic-10 spring	1450

* Refer to page 6 for driven disc-damper torque capacity.

POSITIVE PIN SEPARATOR

Spicer's positive separator (Fig. 4) improves 15 1/2" and 14" Flat Flywheel clutch life and performance by providing cooler operation, smoother engagement and equal plate separation-all resulting in longer clutch life.

The separator pin allows the intermediate plate to move back when the clutch is released, giving equal gap on both sides of the intermediate plate.

KWIK-ADJUST COMPONENT

Spicer's 14" & 15 1/2" Easy-Pedal Clutches include a manual-adjusting, easy-lock component. The Kwik-Adjust component (Fig. 3) offers the following benefits:

- Allows quick adjustment
- Easy to reach
- No bolts to remove.

Several performance advantages are designed into Spicer Easy-Pedal Clutches. Pedal effort is reduced by as much as 50%. The clutch plate load is constant and uniform throughout the wear-life of the facing material. An efficient cover ventilation design cools the clutch quickly. Because the pressure springs are isolated from

the pressure plate (which is the source of friction heat), they retain their load which provides constant performance over the life of the clutch.

HEAVY-DUTY CLUTCHES

Spicer Easy-Pedal Clutches are available in 14“, 14“ Super-Duty and 15 1/2” 2-plate models. The 14” Super-Duty version gives you extra capacity for heavy-duty conditions, on and off-highway, and for pick-up and delivery applications. The Super-Duty has a thicker intermediate plate to absorb and dissipate up to 30% more heat. Driven discs are faced with four ceramic buttons per side to provide 33% more friction area.

COAXIAL SPRINGS

Spicer’s coaxial spring (spring within a spring) design (Fig. 5) increases the life of the clutch and whole drivetrain by dampening the torsional vibrations which are inherent in all drivelines.

DRIVEN DISC OPTIONS

Spicer offers several choices in 14“ and 15 1/2” driven disc designs. The proper selection depends on the operating conditions the vehicle will encounter. The options are; organic material, rigid (Fig. 6), organic material, dampened (Fig. 7), 4-button ceramic, rigid (Fig. 8), 4-button ceramic, dampened (Fig. 9)

3-button ceramic *facings* (Fig, 10) To obtain extended 14" clutch life in vehicles operating under normal, over-the-road conditions, 3-button ceramic clutch facings are recommended.

4-button *ceramic* facings—For vehicles such as rear dumps, cement mixers, landfill trucks, etc., operating on/off-highway, in mud, sand or uneven ground, and higher horsepower line haul applications Spicer recommends the super-duty, 4-button ceramic facing clutch for long life and high torque capacity.

Super damper (Fig. 11) Available 15 1/2” only with 4 ceramic buttons and 10 coaxial springs with built-in free travel to reduce gear rattle at idle. Also available in organic facings with 10 coaxial springs.

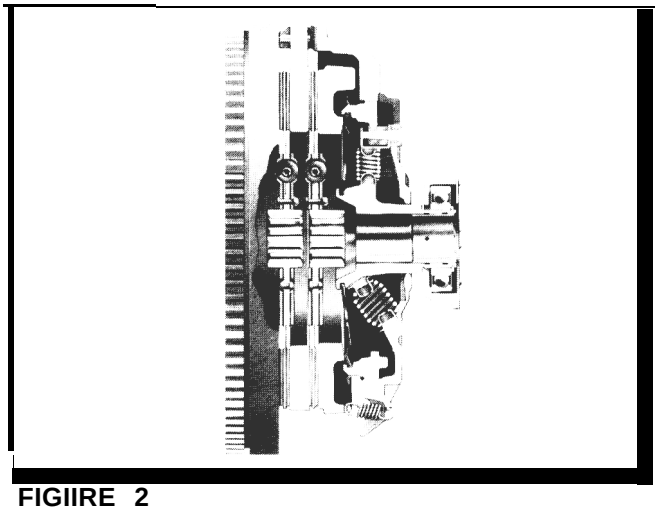

FIGIIRE 2
14" EASY-PEDAL™ FLAT FLYWHEEL

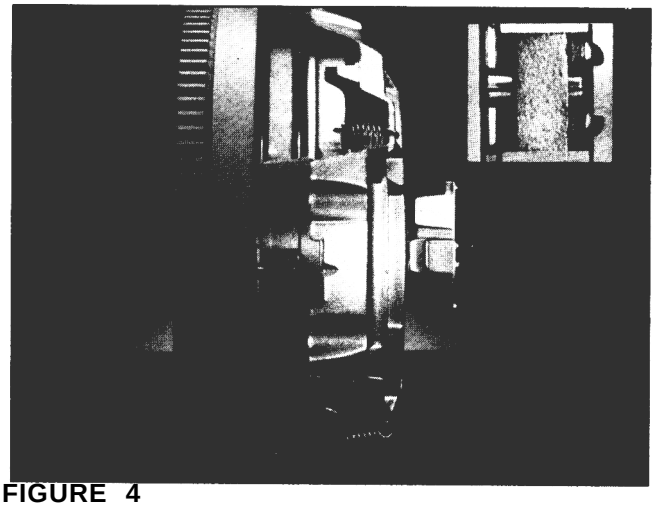

FIGURE 4
POSITIVE PIN SEPARATOR



FIGURE 3
KWIK-ADJUST™ COMPONENT

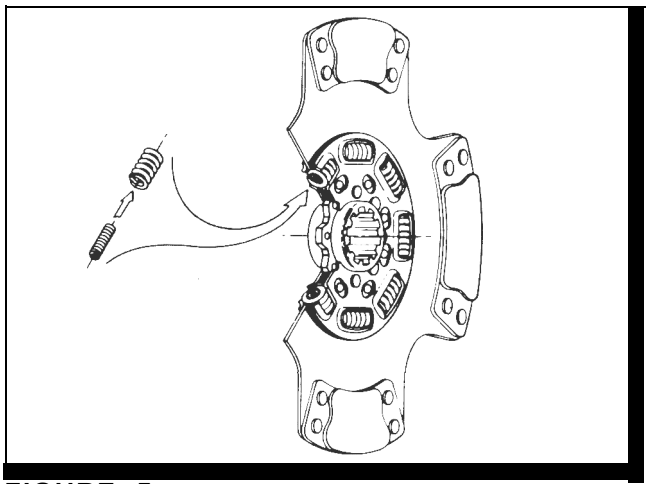

FIGURE 5
COAXIAL SPRING DESIGN

Free travel: This allows the disc hub to move 1.5 degrees in either direction before it engages the dampening springs, thereby reducing gear rattle when the truck is at idle.

/Vote: The hub in the super damper may be turned by hand depending upon the amount of friction lag (it is not loose).

SPICER% LATEST TECHNOLOGY IN DRIVEN DISC DESIGN:

- Patented Coaxial
- Super Button™
- Free Travel
- For use with all diesel engines
- Greatly reduces vibration
- Extends driveline life
- Reduces spline wear
- Available with ceramic or organic facings

In the past, no one worried about torsional vibration. Transmissions with ten or more speeds were split in a narrow range between 1800 and 2100 rpm. Today's fuel-efficient engines, have high torque, lower-governed rpm, and with fewer speeds in the transmission, the result is much greater torsional vibration. This presents a need for ***finely tuned dampened discs.***

Excessive torsional vibration can significantly shorten the life for your transmission, prop shaft, and axle, and add to driver discomfort. ***For maximum service /life, rigid discs are not recommended.*** That's why Spicer engineered the Coaxial-Spring (spring-within-a-spring) Driven Disc to dampen critical vibrations in high-torque-rise engines.

AVAILABLE IN THREE MODELS:

- Our 8 (green) coaxial springs are adequate for engines up to 1400 Ibs. ft. of torque.
- Our 8 (white) coaxial free travel springs are adequate for engines up to 1250 lbs. ft. of torque.
- Our 10 (black) coaxial springs are adequate for engines up to 2000 Ibs. ft. of torque (only offered in a 15 1/2" disc).

CERAMIC OR ORGANIC FACINGS:

Organic (non-asbestos) facings are offered for lower horsepower or on-highway applications.

Spicer recommends ceramic facings (with the Super Button design) for more rugged use, longer life (on or off the highway) "providing a figher coefficient of fricton for more effective engagement and longer facing life.

Spicer clutches should be replaced when internal adjustment cannot correct for a loss of free pedal or cannot compensate for a slipping clutch.

If clutch replacement is necessary, the transmission must be removed.

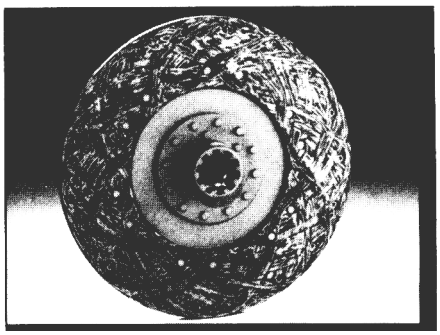

FIGURE 6
RIGID ORGANIC 14" & 15 1/2"

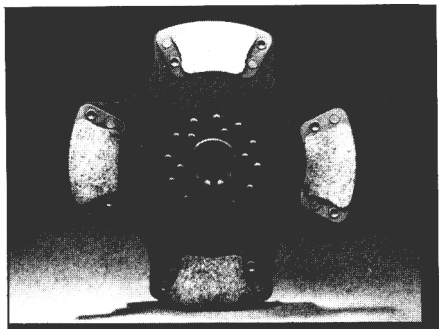

FIGURE 8
RIGID 4-BUTTON CERAMIC 14" & 15 1/2"

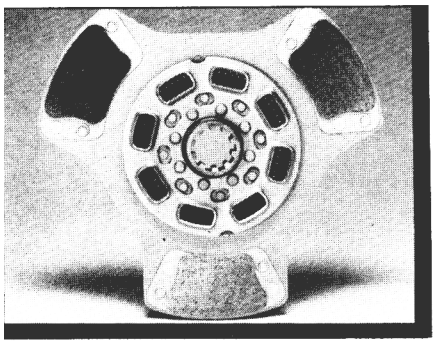

FIGURE 10
DAMPENED 3-BUTTON CERAMIC 14" ONLY

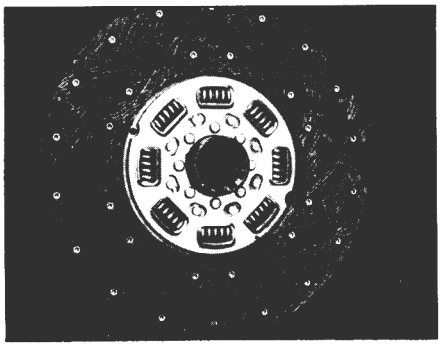

FIGURE 1
DARIPENED ORGANIC 14"& 15 1/2"

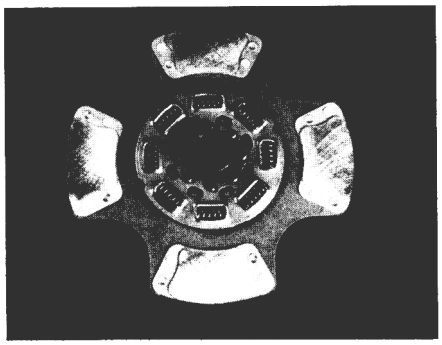

FIGURE 9
DAMPENED 4-BUTTON CERAMIC 14"& 15 1/2"

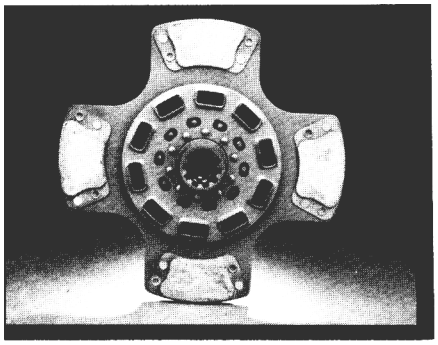

FIGURE 11
SUPER DAMPER 4-BUIION CERAMIC 15 1/2" ONLY (10 SPRING OAMPER)

Note: Throughout the following sections, reference will be made to specialized tools recommended to assist in performing clutch removal, replacement and adjustment. Please refer to Spicer CSK-I tool kit as shown on page 22.

TRANSMISSION REMOVAL **STEP 1**

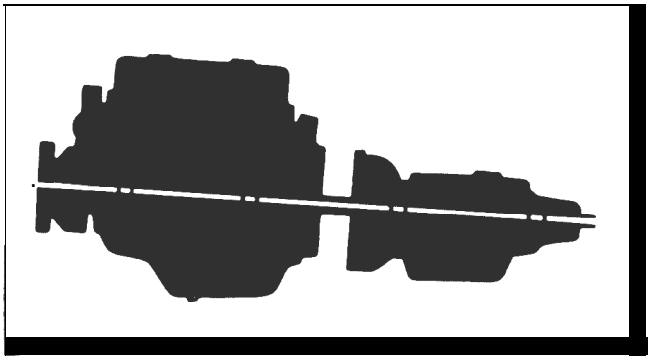

When removing the transmission, use a sling or jack to maintain alignment.

Don't let the rear of the transmission drop and don't let the transmission hang unsupported in the splined hubs of the driven discs because it distorts them and could cause poor clutch operation or clutch release problems.

Taking these precautions will prevent bending and distortion of the clutch discs and ensures trouble-free performance.

STEP 2

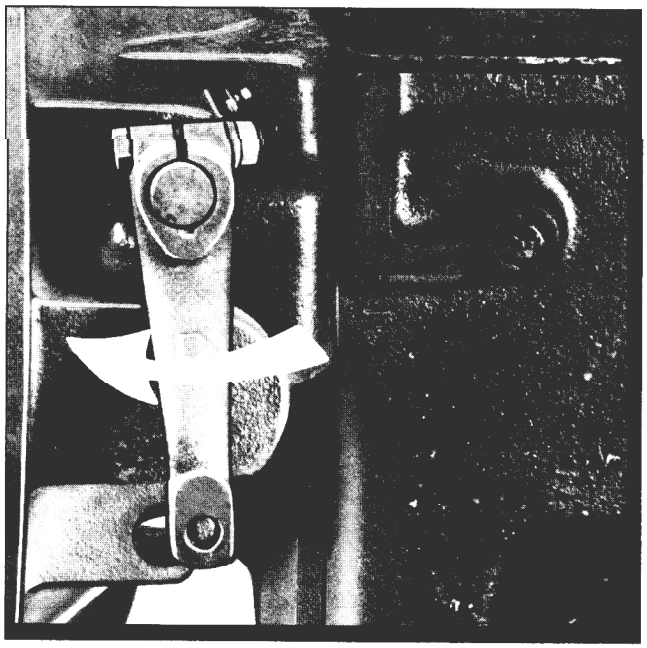

Before pulling the transmission free, disconnect the external clutch linkage and rotate the release yoke so it will clear the release bearing when it is removed. Carefully pull the transmission back to remove the splined shaft from the driven discs and the clutch.

CLUTCH REMOVAL **STEP 1**

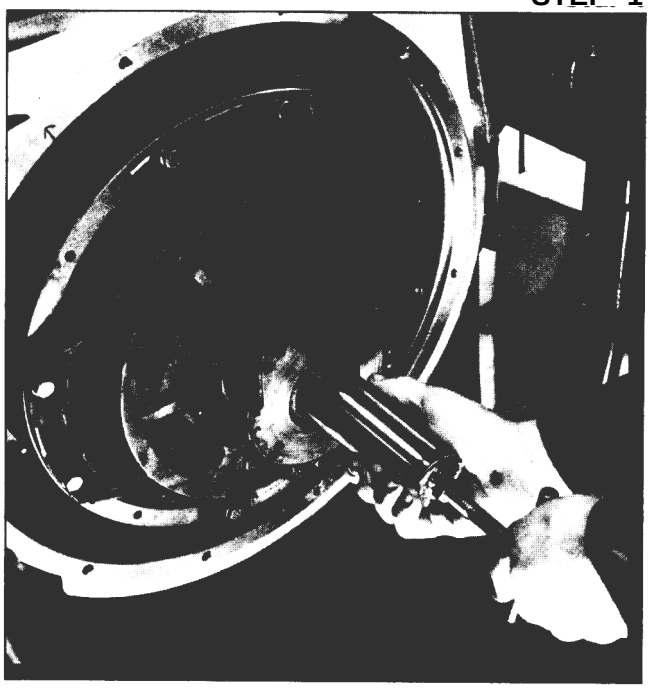

Install a spline aligning tool through the release bearing and the driven discs, into the pilot bearing. You can use an old transmission input shaft for this purpose.

STEP 2

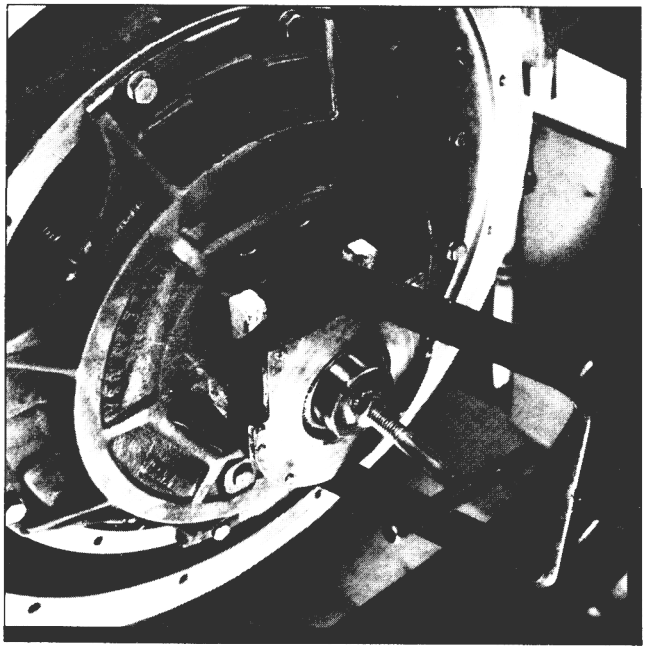

Pull bearing back using release tool shown and insert two, 5/8 inch spacers between the clutch cover and the release bearing. The spacers relieve the internal spring load of the clutch cover and allow for reinstallation.

STEP 3



Completely remove the top two bolts and install two 3/8 - 16UNCx21/2" long guide studs. Take out the remaining mounting bolts and carefully remove the clutch.

You may want to use a hoist to do this because a 14" clutch weighs approximately 75 pounds and a 15 1/2" clutch installation weighs approximately 150 pounds.

INSPECTION

STEP 1

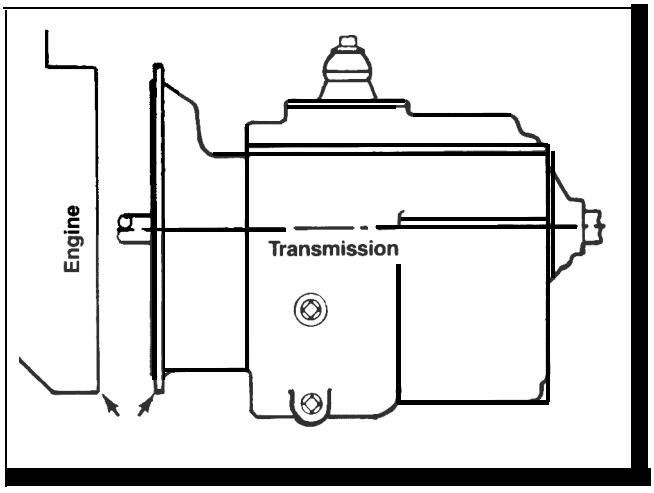

Inspect the mating surfaces of the transmission clutch housing and the engine flywheel housing.

Any appreciable wear on either housing will cause misalignment.

STEP 2

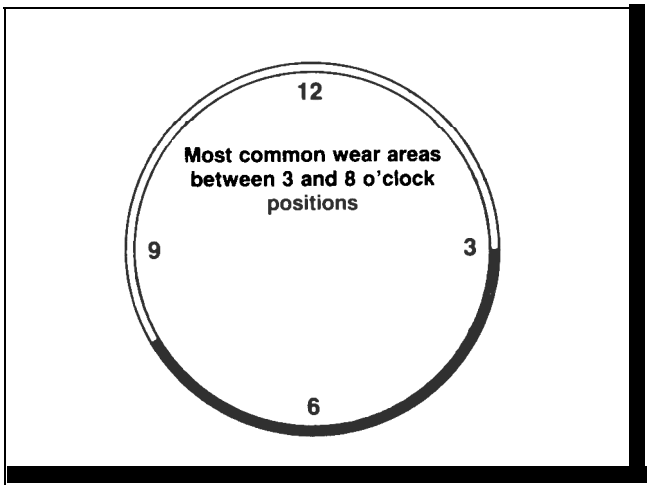

Most wear will be found on the lower half of these surfaces with the most common wear areas between the 3 and 8 o'clock positions.

Replace the clutch housing if it is worn.

STEP 3

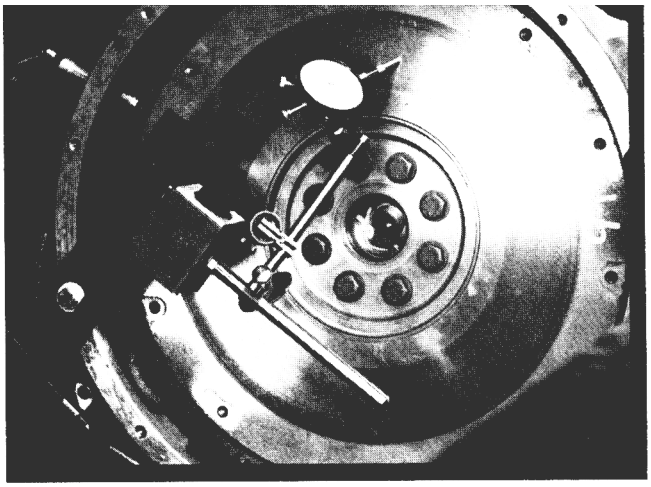

Begin by wiping all surfaces before gauging. Secure the dial indicator to the engine flywheel housing with the gauge finger on the face of the flywheel near the outer edge.

Rotate flywheel.

Maximum permissible runout is .0005" per inch of flywheel diameter.

The total indicated difference between the high and low points must be .007" or less for 14", .008" or less for 15 1/2".

STEP 4

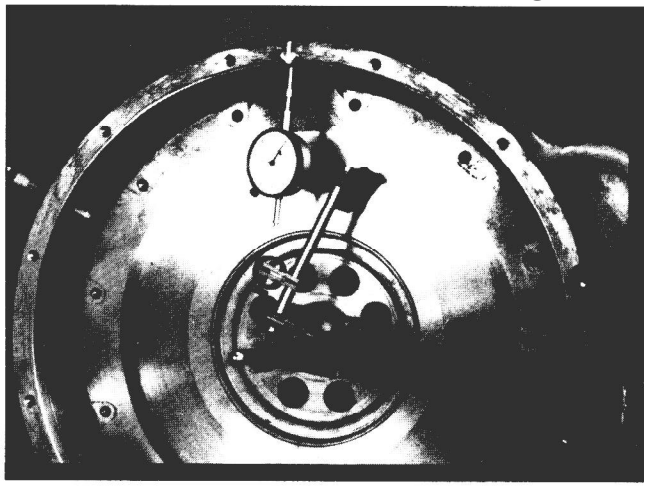

Next, secure a dial indicator to the crankshaft, with the gauge finger against housing pilot rotate the crankshaft.

Use a marker or piece of soapstone to mark the high and low points.

Total difference between high and low points should not exceed .008".

STEP 5

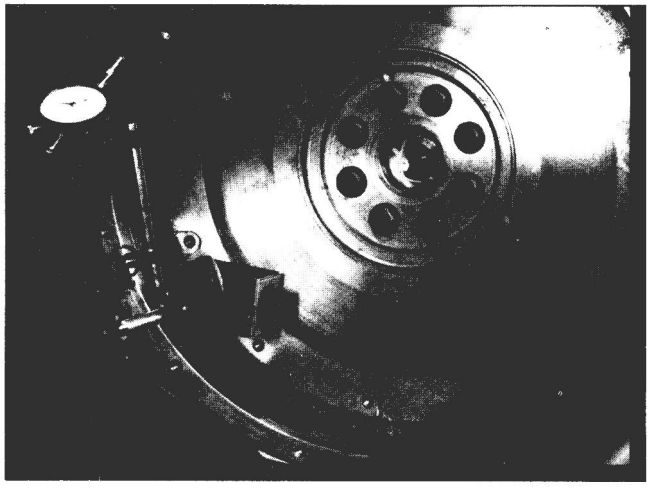

Move the gauge finger to contact the face of the engine flywheel housing. Again, rotate the crankshaft and then mark high and low points using a soapstone.

The total difference between the high and low points should not exceed .008".

STEP 6

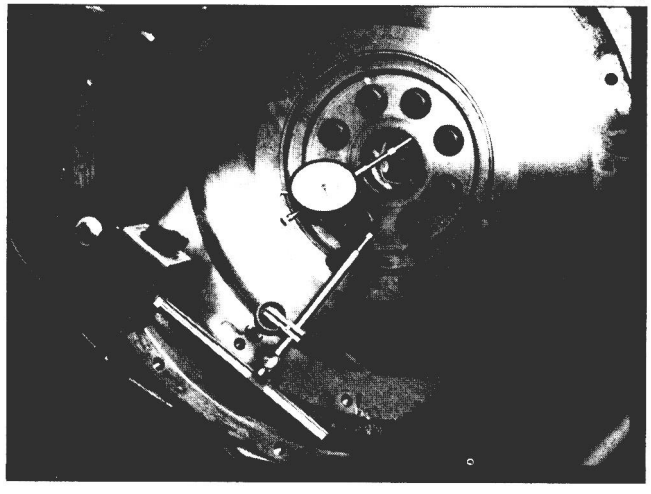

Move the gauge finger to contact the pilot bearing bore surface. Again, rotate the flywheel. The maximum total allowable runout is .005".

If any of these limits are exceeded, the problem must be corrected or misalignment will cause premature wear to the drivetrain components.

THIS STEP APPLIES FOR 14" POT STYLE FLYWHEELS ONLY.

STEP 7

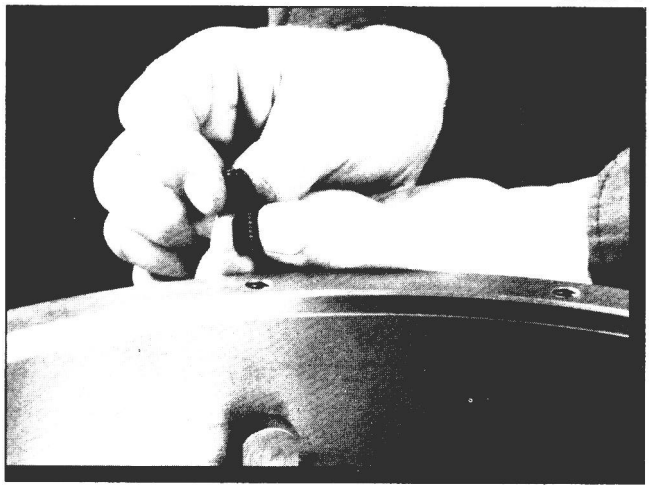

Mark the flywheel to crankshaft positon with a piece of soapstone or chalk and remove the crankshaft bolts. Remove the flywheel and set it on a flat work surface.

Remove two set screws from each of the six drive pins.

Caution: Since the drive pins are made of hardened steel and could chip, wear safety glasses when removing the old drive pins.

Drive out the old drive pins with a brass hammer.

INSTALLATION OF A SPICER 14" CLUTCH

STEP 1



Install six new drive pins in the previously unused holes in the flywheel. Space them out equally. Make sure that the shanks of the pins area press fit in the flywheel rim.

We recommend using a drive pin aligning tool like the one found in the Spicer CSK-1 Tool Kit. Make ***sure that the heads are square with the friction surface, misaligned drive pins may cause a clutch release problem.***

Put two small spacers on the friction surface of the flywheel and carefully set the intermediate plate over the drive pins. The spacers will prevent getting your fingers pinched by the intermediate plate and give you a finger hold when removing it.

STEP 2

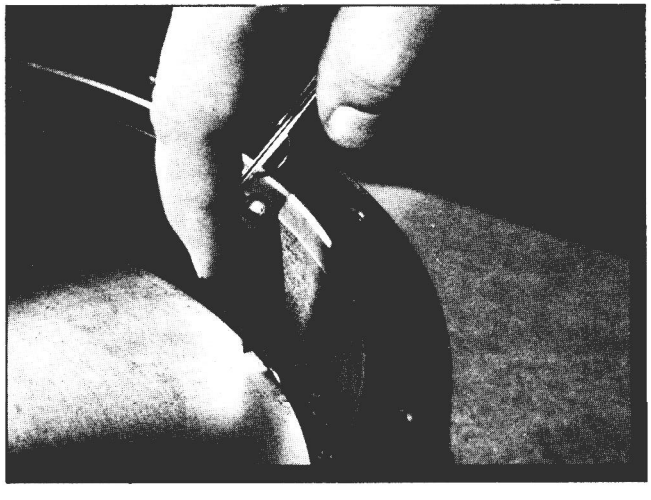

Turn the intermediate plate in one direction as far as it will go.

Use a .006" feeler gauge and check the clearance between the drive pin and the drive slot. Check the same side of each pin. The minimum clearance between the drive pins and the drive slots is .006". If the proper clearance is not obtained, realign the drive pins and recheck the squareness. Then recheck the clearances. This check is necessary to ensure that the clutch will release properly when installed.

Do not file the drive pin slots on the intermediate plate to obtain correct clearances. Doing so will cause an unequal load on the pins. This is a frequent cause of poor release or the clutch not releasing at all. It can also result in broken drive pins.

STEP 3

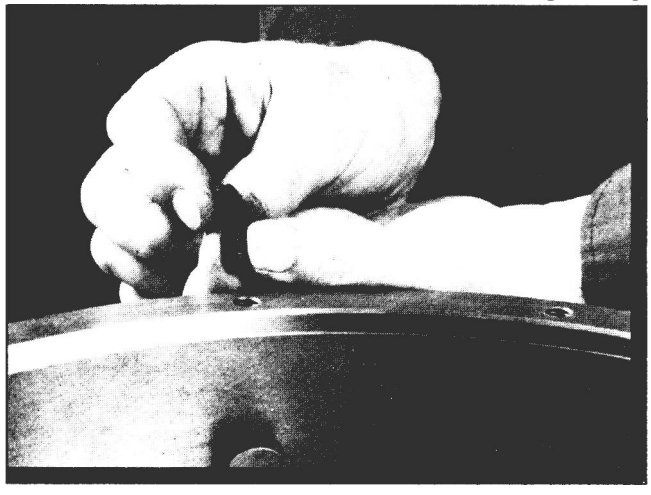

If the alignment and clearance is correct, lock each of the six pins in place with two, new, 3/8" by 3/8" set screws.

Reinstall the flywheel to the engine crankshaft, making sure the chalk marks are lined up. Refer to the engine manual for torque specs on the flywheel mounting bolts.

Remove the pilot bearing and replace with a new bearing.

Caution: Tap on the outer race of the pilot bearing *only,* making sure it is seated properly in the bearing bore. This bearing must have a press fit within the pilot bearing bore.

STEP 4

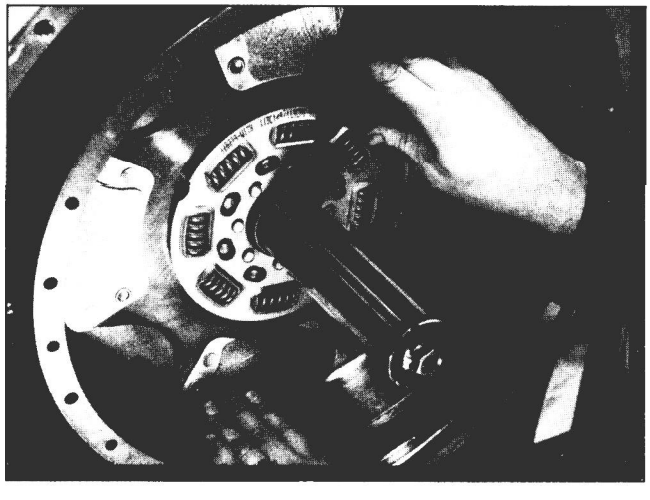

Place the front driven disc against the flywheel with the side stamped "flywheel" facing the engine.

STEP 5

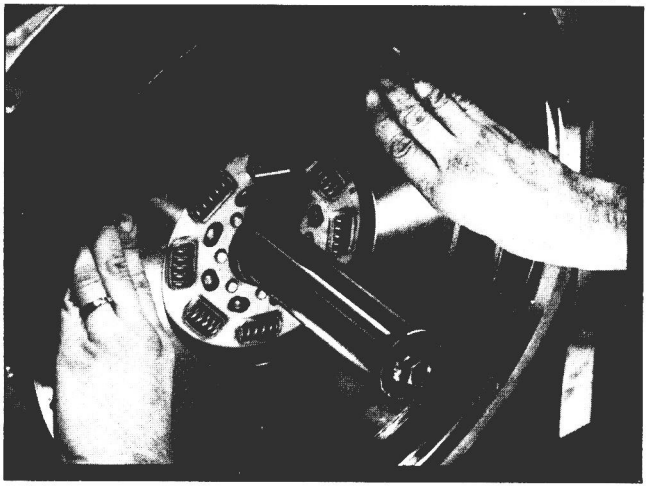

Next, install the intermediate plate by positioning the drive slots on the drive pins and remove the aligning tool.

Caution: Super-Duty Clutches have thicker intermediate plates and thinner super buttons than standard clutches. ***Do not intermix these conponents!***

STEP 6

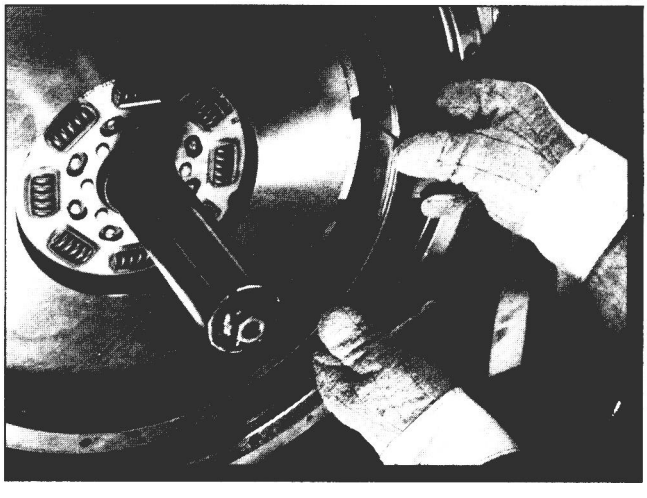

If you are installing a Super-Duty Clutch, be sure to install three, anti-rattle springs. Space them equally between the drive pins with the rounded sections toward the flywheel face. For safety reasons, you should wear heavy gloves when installing anti-rattle springs.

Insert the aligning tool through the hub of the rear disc with the side stamped "pressure plate" facing the transmission and install it after the intermediate plate. ***Remember: It's imperative that the side stamped "pressure plate" faces the transmission and the side stamped "f/ywhee/" faces the engine.***

STEP 7



Re-insert the aligning tool through the hub of the front driven disc and into the pilot bearing.

The relative position of the buttons on the front and rear discs is not important.

STEP 8

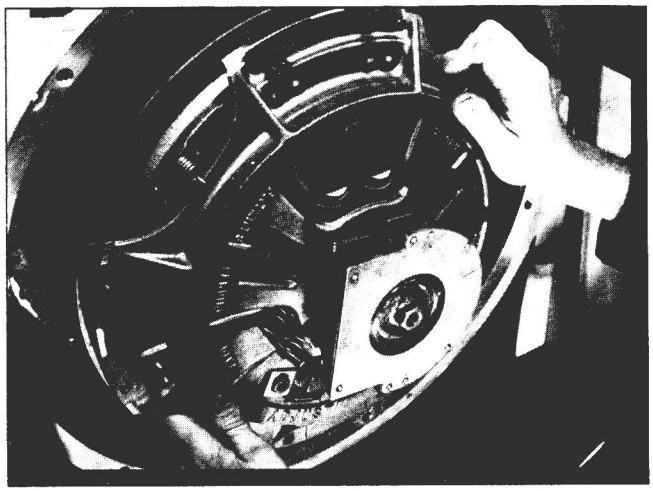

Position the clutch cover over the guide studs installed at the top of the flywheel. ***Make sure that the Kwik-Adjust mechanism will be aligned with the opening in the bell housing of the transmission.***

Start six, 3/8" by 1 1/4", grade 5 or better mounting bolts with lockwashers and tighten them finger-tight.

STEP 9

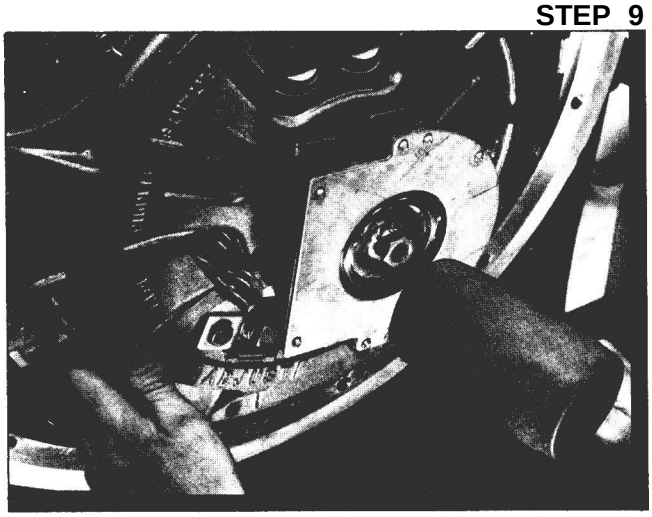

Lightly tap the aligning tool to make sure it is centered and seated into the pilot bearing.

Remove the guide studs and replace them with bolts and lockwashers.

STEP 10

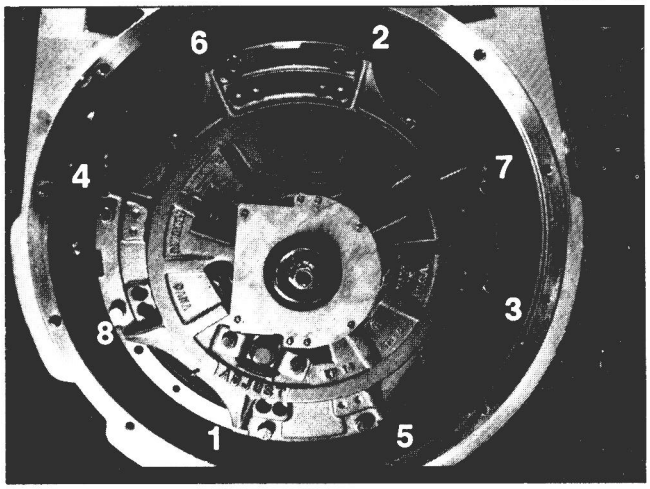

Tighten the bolts in the criss-cross sequence shown to pull the clutch into its proper position in the flywheel pilot. You must start with the lower left-hand bolt.

Failure to tighten the bolts in this manner can cause permanent damage to the clutch cover or create an out-of-balance condition.

To achieve final torque, progressively tighten all bolts to 35-40 lbs. ft.

As the bolts are tightened, the wooden spacers should fall out. If they do not fall free, be sure to remove them.

You may have to *light/y* tap the aligning tool with a mallet to remove it.

STEP 1

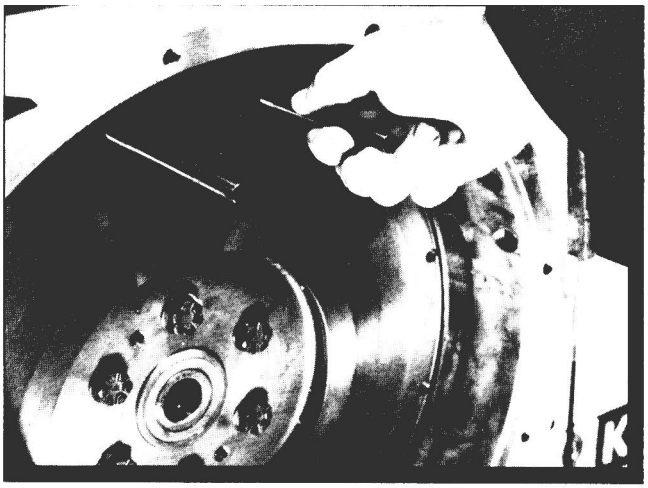

Insert two 7/16“ - 14 UNC (5” long) guide studs into the two upper mounting holes of the flywheel.

STEP 2

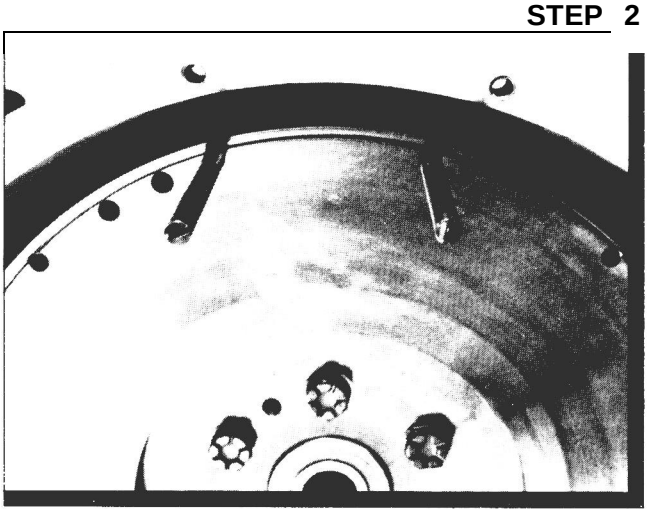

Rotate the flywheel to level the two guide studs.

STEP 3

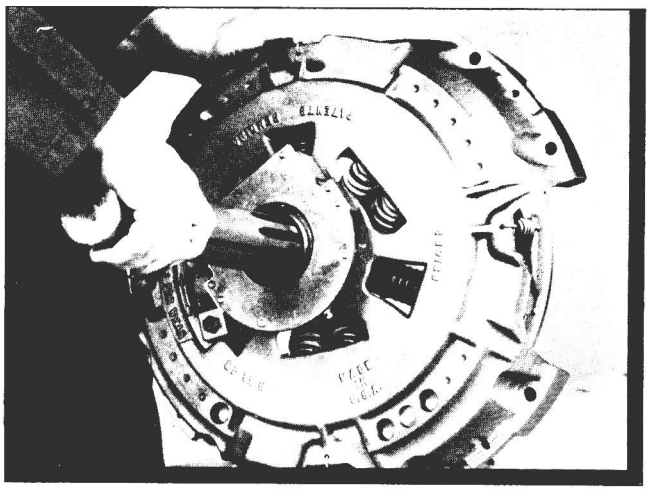

Insert the aligning tool through the release bearing sleeve in the new clutch.

STEP 4

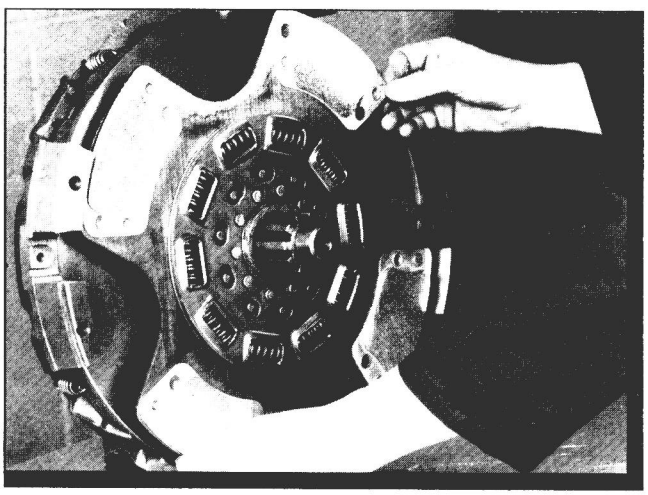

Put the rear driven disc on the aligning tool with the side stamped “pressure plate” facing the pressure plate.

STEP 5

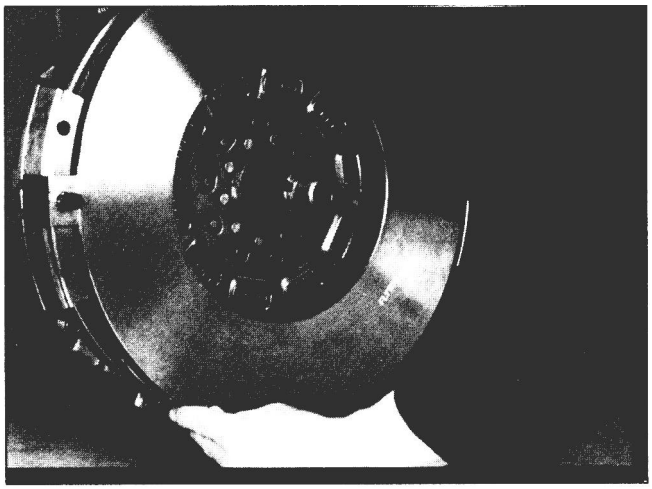

Place the intermediate plate in the clutch cover and align the driving lugs of the plate with the slots provided. ***The four positive separator pins in the intermediate p/ate must be f/ush with the cast lug, on the pressure plate side.***

STEP 6

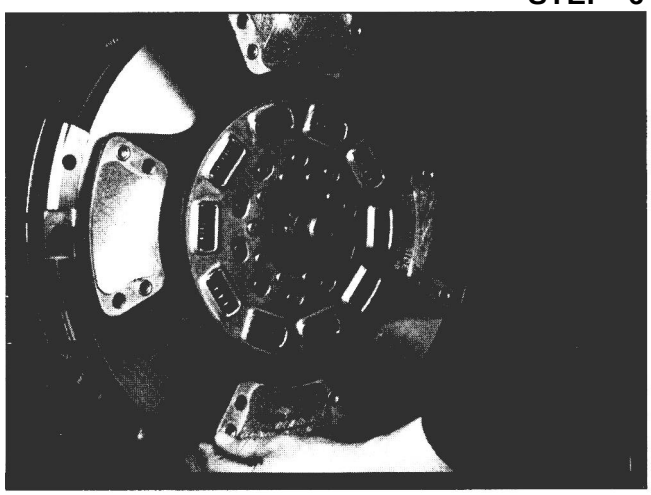

Install the front disc on the aligning tool with the side stamped “flywheel” facing the engine.

STEP 7

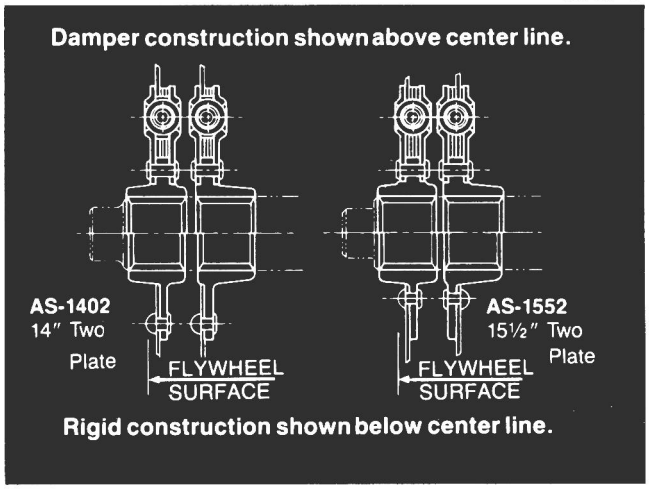

Remember: It’s imperative that the side stamped “flywheel” faces the engine and the side stamped “pressure plate” faces the transmission.

The relative position of the buttons on the front and rear driven discs is not important.

Make sure that the Kwik- Adjust mechanism will be aligned with the opening in the bell housing of the transmission.

STEP 8



Position the clutch over the guide studs and slide it forward until contact is made with the flywheel surface.

A 15 1/2” clutch installation weighs about 150 pounds and a hoist may be required to lift it into place.

STEP 10

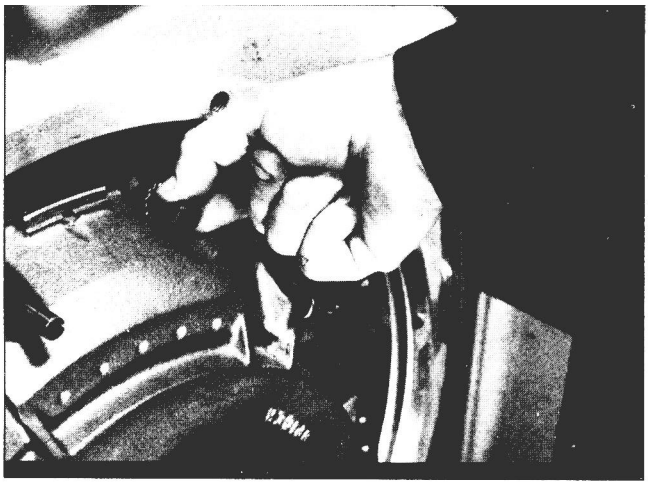

Start six, 7/16“by2 1/4”, grade 5 or better mounting bolts with lockwashers and tighten them finger-tight.

STEP 10



Lightly tap the aligning tool to make sure it is centered and seated in the pilot bearing.

Remove the guide studs and replace them with bolts and lockwashers.

STEP 11

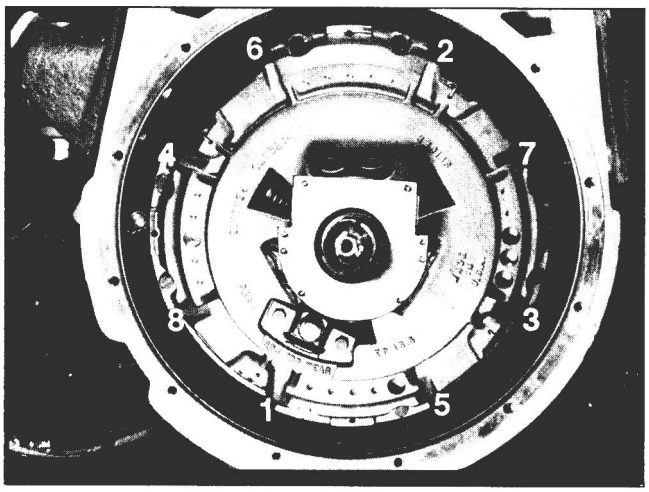

Tighten the bolts in the criss-cross sequence shown to pull the clutch into its proper position in the flywheel pilot. You must start with the lower left-hand bolt.

Failure to tighten the bolts in this manner can cause permanent damage to the clutch cover or create an out-of-balante condition.

To achieve the final torque, progressively tighten all bolts to 45 to 50 lbs. ft.

As the bolts are tightened, the wooden spacers should fall out. If they do not fall free, remove them.

You may have to ***lightly*** tap on the aligning tool with a mallet to remove it.

STEP 12

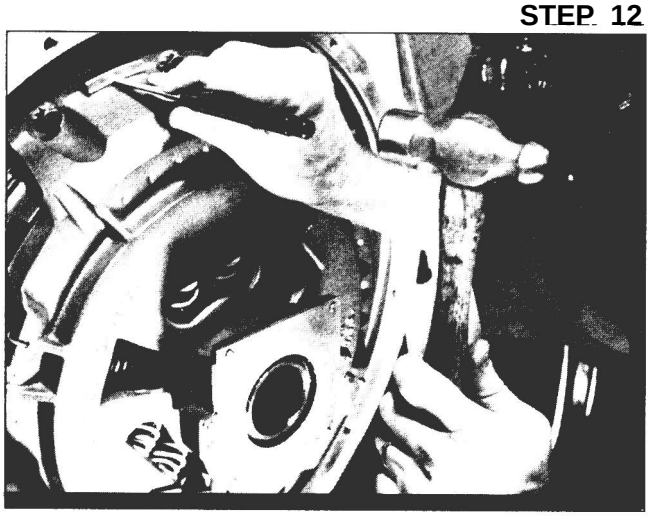

Using a 1/4” diameter flat nose drift, ***lightly*** tap each of the four positive separator pins toward the flywheel. After tapping, the pins should be flush against the flywheel.

RE-INSTALLING TRANSMISSION

STEP 1

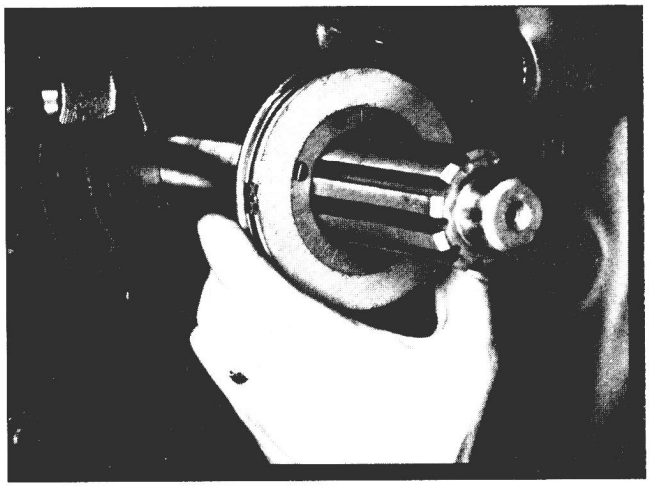

To reinstall the transmission, shift it into gear.

Inspect the transmission input shaft for wear. If worn, replace. Using a clean, dry cloth wipe the shaft clean.

Check for wear on transmission bearing caps. See O.E. Service Manual if replacement is needed.

If a clutch brake is used, be sure to install it on the input shaff of the transmission at this time.

Check for wear on the fingers of the clutch release yoke. Also, check the cross shaft and the cross shaft bushings. Replace them if necessary.

Check to be sure that neither cross shaft protrudes through the release fork since this could cause side loading of the release bearing.

STEP 2

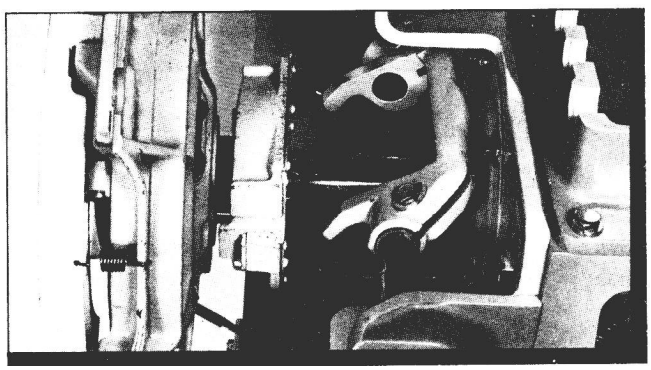

STEP 3

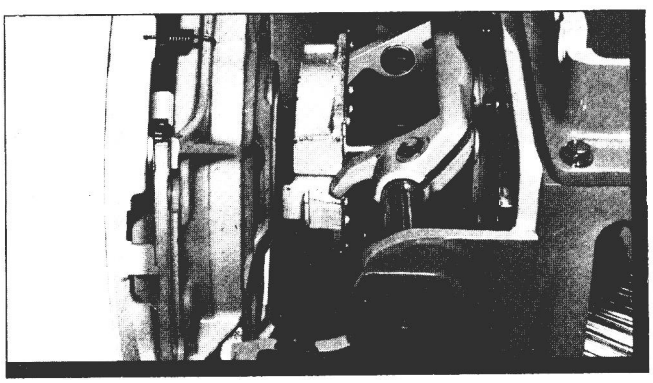

STEP 4

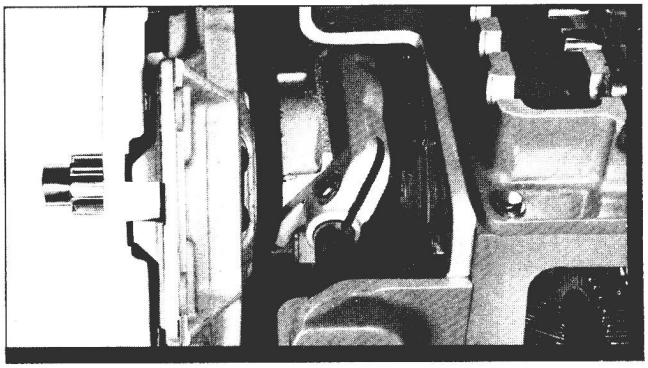

Rotate the release yoke so that it clears and is rotated over the wear pads of the release bearing as the transmission is moved forward. (See progessive steps2-4). Be careful: The release yoke fingers must not be elevated to the straight out position, as they could damage the clutch cover when moving the transmission forward.

Make sure that the transmission aligned with the engine when it is raised into position.

STEP 5

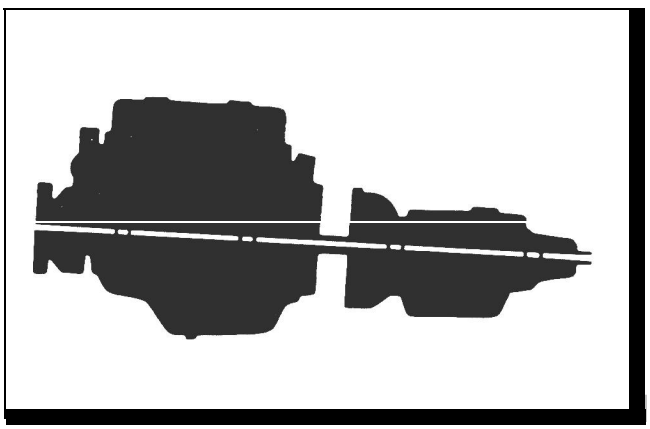

Don't let the rear of the transmission drop and don't let the transmission hang unsupported in the splined hubs of the driven discs because it distorts them and could cause poor clutch operation or clutch release problems.

Taking these precautions will prevent bending and distortion of the fine/y tuned clutch discs and ensures troub/e-free performance.

Move the transmission forward but ***never*** force the transmission into the clutch or flywheel housing. If it doesn't enter freely, investigate the cause and make adjustments until it does.

Mate the transmission with the engine housing and install the mounting bolts. Torque the bolts to the proper manufacturer's specifications. Attach the clutch release linkage.

Installation of the transmission is complete and adjustments can now be made to the clutch and, if necessary, the linkage.

UNDERSTANDING SPICER CLUTCH ADJUSTMENT

To assure optimum performance of Spicer Clutches:

a. l/2'' to 9/16'' release travel is required
b. 1/8" free travel (clearance between release bearing and release yoke)
c. Clutch to brake squeeze must occur 1/2" to 1" from the end of pedal stroke

TERMINOLOGY

1. RELEASE TRAVEL: 1/2" TO 9/16"

Proper release travel assures that the release bearing is capable of releasing far enough, to allow the two driven discs to spin freely, avoiding clutch drag.

2. CLUTCH FREE PEDAL:

Pedal free play is an indication of clutch adjustment interval. When free pedal is no longer present, begin adjustment procedures as outlined below.

3. CLUTCH FREE TRAVEL: 1/8"

Free travel is the clearance between the release yoke and clutch release bearing wear pads. This dimension regulates how much free pedal is obtained in the cab.

4. CLUTCH BRAKE SQUEEZE: 1/2" TO 1" FROM THE END OF THE PEDAL STROKE.

Proper clutch brake squeeze assures that the input shaft will stop rotating when the vehicle is stationary. Clutch brake is only used when shifting into 1st or reverse. Keep clutch brake squeeze close to end of pedal stroke to assure that it will **not be used as *an upshifting brake,*** causing brake life reduction.

EXPLANATION OF ADJUSTMENT

1. INTERNAL CLUTCH ADJUSTMENT: (NORMAL SERVICE ADJUSTMENTS).

Clutch component wear is adjusted internally in the clutch through clockwise rotation of the adjusting ring. This adjustment moves the release bearing toward the transmission and re-establishes the 1/2" release travel and 1/8" free travel.

2. LINKAGE ADJUSTMENT

Linkage adjustment should only be performed in the following cases:

A. Initial dealer preparation to set total pedal stroke and yoke throw.
B. To compensate for linkage wear, clutch brake wear, transmission bearing cap wear or replacement of relative clutch or linkage components.

SPICER CLUTCH AND LINKAGE NORMAL SERVICE ADJUSTMENTS

STEP 1: INTERNAL CLUTCH ADJUSTMENT

1. Remove inspection cover at bottom of clutch housing.
2. Measure clearance between release bearing housing and clutch brake. See Fig. 1. If clearance is less than 1/2" or greater than 9/16", adjust clutch as outlined in following steps:

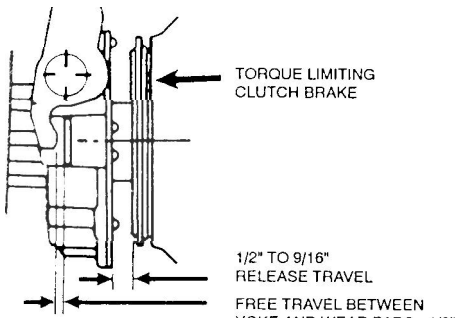

FIGURE 1

A. ***In order to turn the adjusting ring, release the clutch by depressing the clutch pedal to end of pedal travel.***
B. Adjust the clutch ***internally to get 7/2" to 9/16" release.*** This is done by turning the adjusting ring as shown in Fig. 2 (measurement taken with pedal in the "Up" position).
   - Angle Spring Clutches: Remove lockstrap and adjust with Spicer adjusting tool. (Spicer Tool Kit CSK-1)
   - Easy Pedal Clutches with Kwik-Adjust: Insert a 3/4" socket (12 point) or a 3/4" boxed end wrench through inspection hole and ***depress square headed bolt to adjust clutch.*** The Kwik-Adjust will re-engage at a quarter of a turn. The flat on the bolt head will align with the flat edge of the bracket.

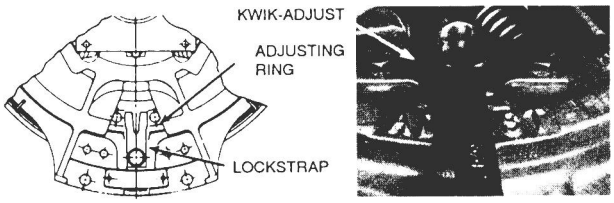

Angle-Spring **Easy-Pedal**

FIGURE 2

1. If clearance between release bearing housing and clutch brake is ***less than 1/2",*** rotate the adjusting ring ***counterclockwise*** which moves the release bearing toward the engine.
2. If clearance between release bearing housing and clutch brake is ***greater than 9/16",*** rotate the adjusting ring ***clockwise*** which moves the release bearing toward the transmission.

C. Re-install lock strap or assure Kwik-Adjust is engaged in the locked position and release the clutch pedal to engage clutch.

STEP 2: FREE TRAVEL SETTING

CAUTION: STEP #1 *MUST* BE COMPLETED BEFORE PROCEEDING WITH FREE TRAVEL SETTING.

1. Check clutch free travel (or clearance between the release yoke and release bearing as shown in Figure 1). Set ***free travel*** at'1/8° dimension by adjusting the ***external linkage.*** This dimension correlates to a *free pedal* of approximately 1 1/2" - 2" in the cab.

IMPORTANT CONSULT OEM LINKAGE ADJUSTMENT PROCEDURES FOR REQUIRED *FREE PEDAL* DIMENSION AND DESCRIPTION OF LINKAGE ADJUSTMENT.

STEP 3: CLUTCH BRAKE SETTING

1. Depress clutch pedal. With correct release travel and free travel settings, clutch brake "squeeze" should occur approximately 1" from the end of pedal stroke.
Depress the clutch pedal. The pedal should be 1/2" to 1" from the end of stroke at the beginning of the clutch brake squeeze. See Fig. 4.

A. To check this insert a .010" feeler gauge or business card between the release bearing and clutch brake (refer to Fig. 2). Depress the clutch pedal and squeeze the card. Let the pedal up slowly. Stop when the card can be pulled out. The pedal should be 1/2" to 1" from the end of pedal stroke.

2. Re-install inspection cover.

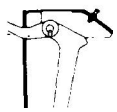

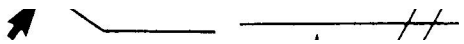

FIGURE 3

OTHER:

ADJUSTMENT FOR SYNCHRONIZED TRANSMISSIONS, NO CLUTCH BRAKE:

With the pedal depressed, turn the adjusting ring to obtain approximately 9/16" between clutch cover and release bearing housing. Check measurement with pedal up. Refer to step 2 above for free travel setting.

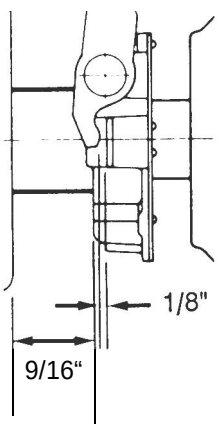

HYDRAULIC LINKAGE:

Refer to manufacturer's Specifications for proper adjustment of system.

Clutches should be lubricated after adjustment and at regular maintenance intervals. Lubricate the release bearing (Fig. 1) with a recommended lubricant as shown. Clutches with permanently sealed release bearings require no lubrication.

Note: It is important that a high temperature lubricant be used as listed below. **Do *not*** use chassis lubricant.

RECOMMENDED LUBRICATION

Grease shall be composed of refined mineral oil and soap suitable for high temperature anti-friction bearings. The product shall be noncorrosive, have good pumpability, and shall not bleed or separate in this application. The use of solid fillers such as graphite, carbon black, asbestos, mica, talc, etc., are not acceptable. The following are the minimum physical requirements of greases recommended for this application.*

Dropping, point °F	- 350 min.
Penetration, ASTM worked @ 77W	- 265-295
Base oil viscosity, SUS @ 100°F	- 500 min.
Soap	-Lithium

*For approval of products other than those shown on this specification, a 5 lb. sample of the candidate greases in its *origins/container on/y* along with complete physical specifications from the manufacturers, should be forwarded to the Dana Corporation, Spicer Clutch Division.

Item to be Serviced	Recommended Lubrication[1]	Recommended Change Intervals[2] Regular Service	Severe Service Off-Highway[3]
Spicer Clutch Release Bearing on All Models with Greasable Bearings	Use a good quality lithium soap base or equivalent E.P. grease having an operating temperature range of +325°F to 10°F. In addition, the grease should meet the N.L.G.I. grades 1 or 2 specifications.	**Every 10,000 Ml (16,000 KM) or 1 Month**	**Every 250 HRS or 1 Month**

[1] Do not mix different basis of lubricant without completely purging the system.

[2] For specific applications contact your Spicer representative.

[3] Any vehicle that operates off paved roads more than 10% of the time.

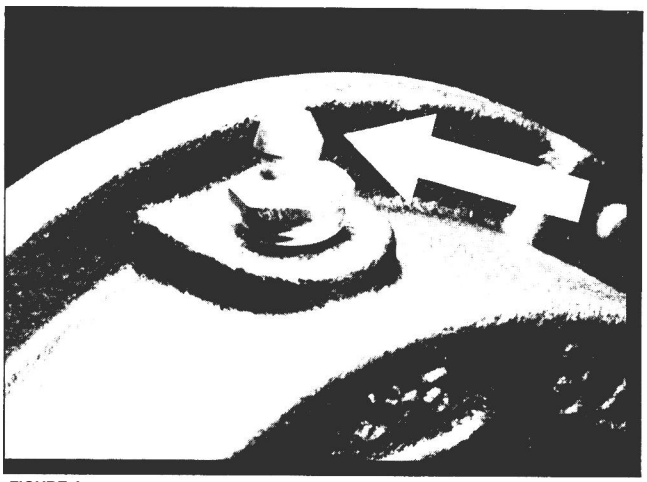

FIGURE 1

APPROVED SOURCES:

Supplier	Product
American Oil Co.	Amoco Lithium-M.P Grease
City Service Co.	Citgo Premium Lithium Grease #2
Fiske Refining Co.	Lubriplate 630-2
Keystone Lubricating Co.	#81 Light
Mobil	Mobilgrease MP
Shell Oil Co.	Retinax A
Atlantic Richfield Co.	Arco M .P.
Texaco	Multifak #2
Humble Oil Co.	Lidok 2
Shell Oil Co.	Alvania #2
* Chevron Oil Co.	S.R.I. #2
* Texaco	Premium RB
* Exxon	Unirex N3

* Approved for vendor prepack, other greases listed are for service only.

LUBRICATION INSTRUCTIONS - WARNING

GREASABLE TYPE

1. The release bearing housing **has not been pre-packed with grease!** It must be lubricated when the clutch is installed in the vehicle or premature failure will occur.
2. Only ***high temperature greases*** should be used. Chassis lube or all purpose lubricants are not recommended.
3. Add lubricant at each chassis lubrication period or more often if service is extreme.

SEALED TYPE

Some models are supplied with a sealed release bearing. These are not equipped with a lube fitting and require no additional grease for the life of the clutch.

DIMENSIONAL CHECKLIST

SUBJECT	EP-1402 14" 2-disc	EP-1552 15 1/2" 2-disc
Minimum Bell Housing Size for Mounting (S.A.E.)	No. 2	No. 2
Pilot Diameter	14.750/14.747	17.156/17.153
Bolt Circle	15.500	16.625
Flywheel Pot Depth	2-15/16	Flat
Clutch Bell to C/L of Release Yoke	3-3/4 (105-C-137 Yoke) 4-3/1 6(105-C-64 Yoke)	3-3/4 (105-C-137 Yoke) 4-3/16 (105-C 64 Yoke)
NEW DISCS ONLY Disc & Ceramic Facing Thickness (Standard) Disc & Ceramic Facing Thickness (Super Duty) Disc & Organic Facing Thickness	 .455/.445 .365/.355 .460/.440	 .455/.445 - .460/.440
NEW l/P ONLY Intermediate Plate Thickness (Standard) Intermediate Plate Thickness (Super Duty) Intermediate Plate Thickness (14" FFW)	 .6300/.6250 .8100/.8050 .8100/.8050	 .7620/.7570 — —
Hub Spline Size (No. splines)	1-3/4-10 2-10	1-3/4-10 2-10
Disc. Assembly Max. Out-of-Flat (feeler gage)	.050	.050
Release Sleeve Bushing Dia. (new)	1.754/1.750 2.010/2.008	1.754/1.750 2.010/2.008
Intermediate Plates, driving lugs to slot clearance (new min.)	.006	.006
Intermediate Plates, driving lugs to slot clearance (max. worn)	.020	.020
Pressure Plates, driving lugs to slot clearance (new min.)	.003	.003
Pressure Plates, driving lugs to slot clearance (max. worn)	.020	.020
Intermediate Plates & Pressure Plates: Out-of-Flat	.000 to .004 Concave	.000 to .004 Concave
Pin Separator Gap (New)	—	.037/.023
Clutch Brake-Torque Limiting torque to rotate	35/12 lb.ft.	35/12 lb.ft.
Maximum Engine RPM	3300	2600

(All dimensions are shown in inches)

POOR CLUTCH RELEASE OR POOR ENGAGEMENT

Probable cause	Correction
1. Clutch adjustment not correct.	1. Recheck adjustment per instructions,
2. Flywheel pilot bearing too tight in flywheel or on end of drive gear.	2. Free pilot bearing with a light push. If bearing is rough, replace it.
3. Siezed pilot bearing.	3. Replace bearing.
4. Non-Functioning clutch brake.	4. Review adjustment procedures. Assure torque to rotate is 12-35 Ib.ft.
5, Damaged clutch release bearing.	5. Replace bearing. If bearing is grease type is installed, lubricate with recommended lube.
6. Clutch release yoke cross shaft projecting through release yoke,	6. Relocate release shaft so that it does not protrude. Check bell housing bushings and release yoke for wear. Lubricate bushing.
7. Release yoke contacting cover assembly at full release position.	7. Replace release yoke with proper yoke and/or adjust linkage for proper travel. Inspect transmission bearing cap for excessive wear.
8. Release yoke not aligned properly with release bearing.	8. Check flywheel. Probably has been resurfaced more than the .060" recommended.
9. Intermediate plate sticking on drive pins (EP-1402 only)	9. Check that drive pins are 90° square to flywheel surface and that there is minimum .006" clearance between drive pins and intermediate plate slots.
10. Intermediate plate binding. (15 1/2" OR 14" FFW)	10, Check that there is minimum .006" clearance between drive lugs and intermediate plate slots.
11, Pressure plate not retracting.	11, Check pressure plate drive lugs for .003" clearance. a. Check pressure plate return springs. b. Check amount of release travel, c. Internal lever nose out of groove.
12. Worn splines on drive gear of transmission.	12, Check drive gear and driven disc hubs for excess wear. Replace if necessary.
13. Disc facings gummed with oil or grease.	13, Replace disc. Cleaning not recommended. Check for leak causing contamination.
14. Broken intermediate plate.	14. Replace entire intermediate plate/driven disc assembly. Damage such as this is almost always caused by abusive use of clutch.
15. Hub and input shaft interference.	15. Check for rust, corrosion, burrs, etc.
16. Improper setting of pin separator (15 1/2" or 14" FFW clutches)	16. Lightly tap each of the four separator pins in the intermediate plate so they contact the flywheel. See page 15, step 12.
17. Bent driven disc.	17. Replace driven disc.

CLUTCH SLIPPING

Probable cause	Correction
1. No free pedal	1. Re-adjust per instructions.
2. Release mechanism binding	2. Check release mechanism and linkage. Lube if necessary.
3. Worn clutch facings	3. Replace complete disc and check opposing surfaces.
4. Grease or oil on facings	4. Replace driven discs.
5. Overloaded clutch	5. Check to assure that proper clutch has been specified for application.

NOISY CLUTCH

Probable cause	Correction
1. Clutch release bearing dry or damaged.	1. Lubricate bearing or replace.
2. Flywheel pilot bearing dry or damaged.	2. Replace bearing.
3. Clutch release yoke striking flywheel ring.	3. Adjust clutch. Also check wear on cross shafts, bell housing bushings and release yoke fingers. Replace if necessary.
4. Improper clearance between drive slots and drive lugs on pressure plates or intermediate plates.	4. Clearance should be no more than .020" on either component.
5. Gear rattle - free travel.	5. Specify correct disc.
6. Clutch disc damper interfering with flywheel mounting bolts.	6. Replace worn driven discs. Ensure correct height on flywheel bolt head. Ensure discs are installed in correct positions.

Helpful Hints to Operate Vehicles With Ceramic Clutch facings

1. Driver must start vehicle in first gear.
2. Ceramic facings slip-period is shorter than organic facings.
3. While operating a ceramic clutch the driver has to engage the clutch before giving the engine any fuel (engine at idle)
4. If driver tries to slip ceramic clutch facings by raising R.P.M.'s with accelerator and riding or feathering clutch pedal, the vehicle will experience erratic engagement.

SPICER CSK-1 TOOL KIT

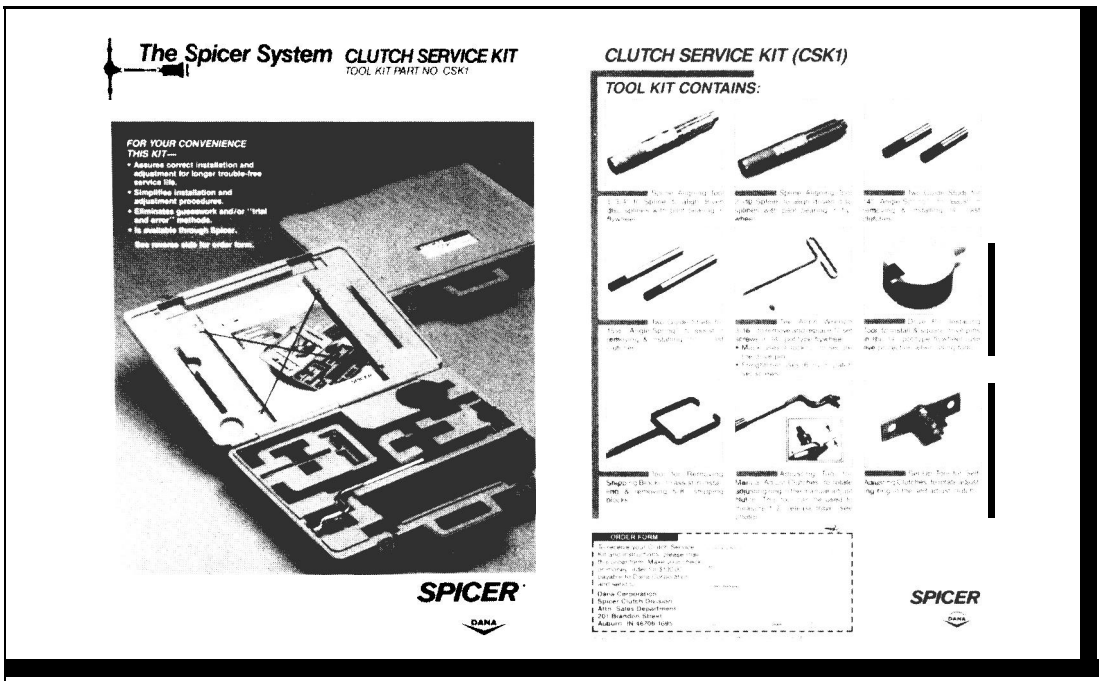

Call-out No.	No. Req'd	Part Name
1	(1)	Snap Ring
2	(1)	Release Bearing Assembly
3	(1)	Kwik-Adjust
4	(1)	Flywheel Ring
5	(3)	Assist Springs
6	(1)	Release Sleeve and Bushing Assembly
7	(6)	Pressure Springs
8	(6)	Spring Pivot
9	(1)	Adjusting Ring
10	(6)	Lever
11	(4)	Return Spring
12	(1)	Pressure, Plate
13	(3)	Anti-Rattle Springs (Super Duty Only)
14	(1)	Front Disc Assembly
15	(1)	Intermediate Plate
16	(1)	Rear Disc Assembly
17	[6)	Drive Pin

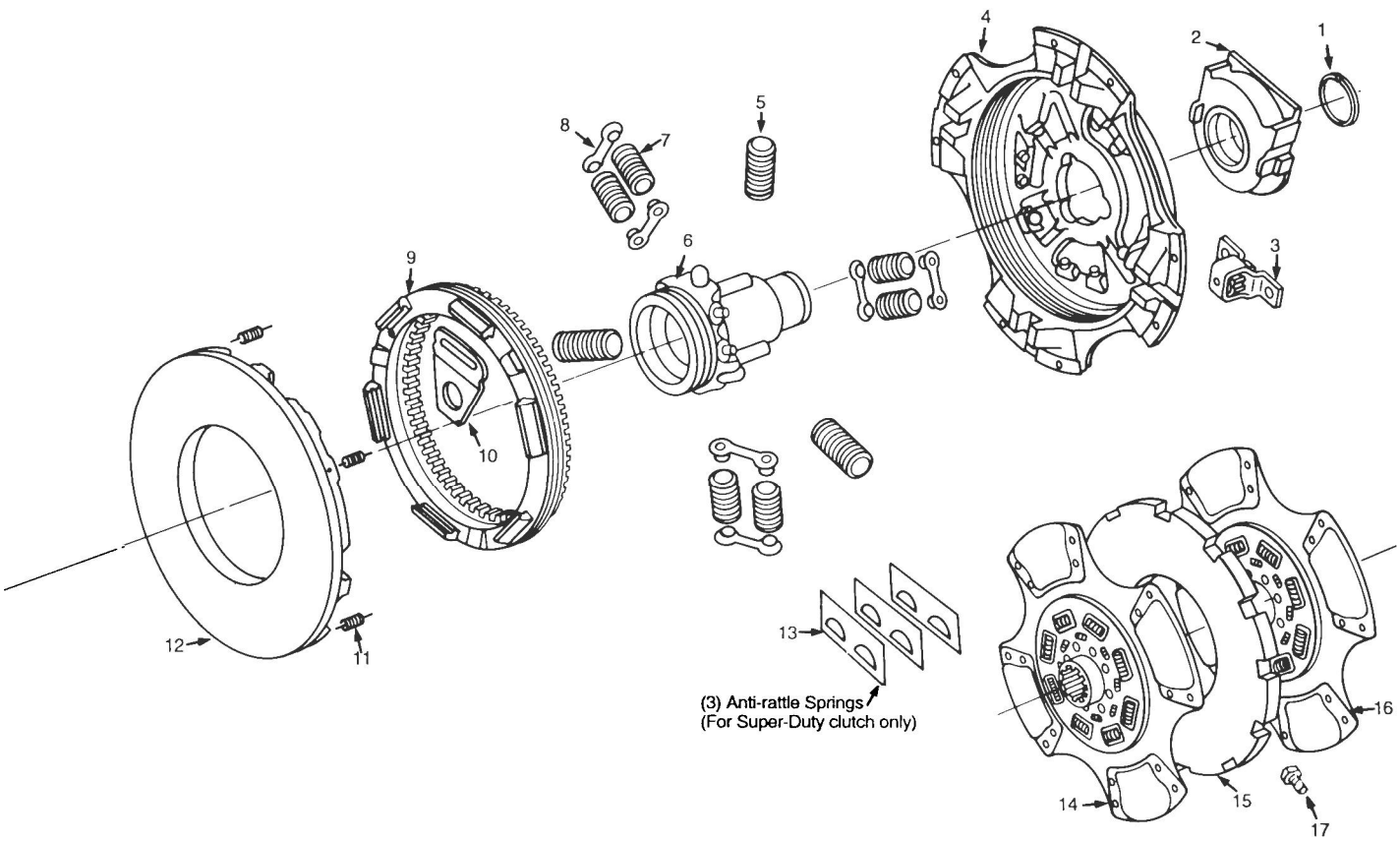

PARTS LIST
15 1/2" EASY-PEDAL™ CLUTCHES

Call-out No.	No. Req'd	Part Name
1	(1)	Snap Ring
2	(1)	Release Bearina Assemblv
3	(1)	Kwik-Adjust
4	(1)	Flywheel Ring
5	(3)	Assist Springs
6	(1)	Release Sleeve and Bushing Assembly
7	(6)	Spring Pivat
8	(6)	Pressure Springs
9	(1)	Adjusting Ring
10	(6)	Lever
11	(4)	Return Spring
12	(1)	Pressure Plate
13	(1)	Front Driven Disc Assembly
14	(1)	Intermediate Plate With Positive Pin Separator
15	(1)	Rear Driven Disc Assembly

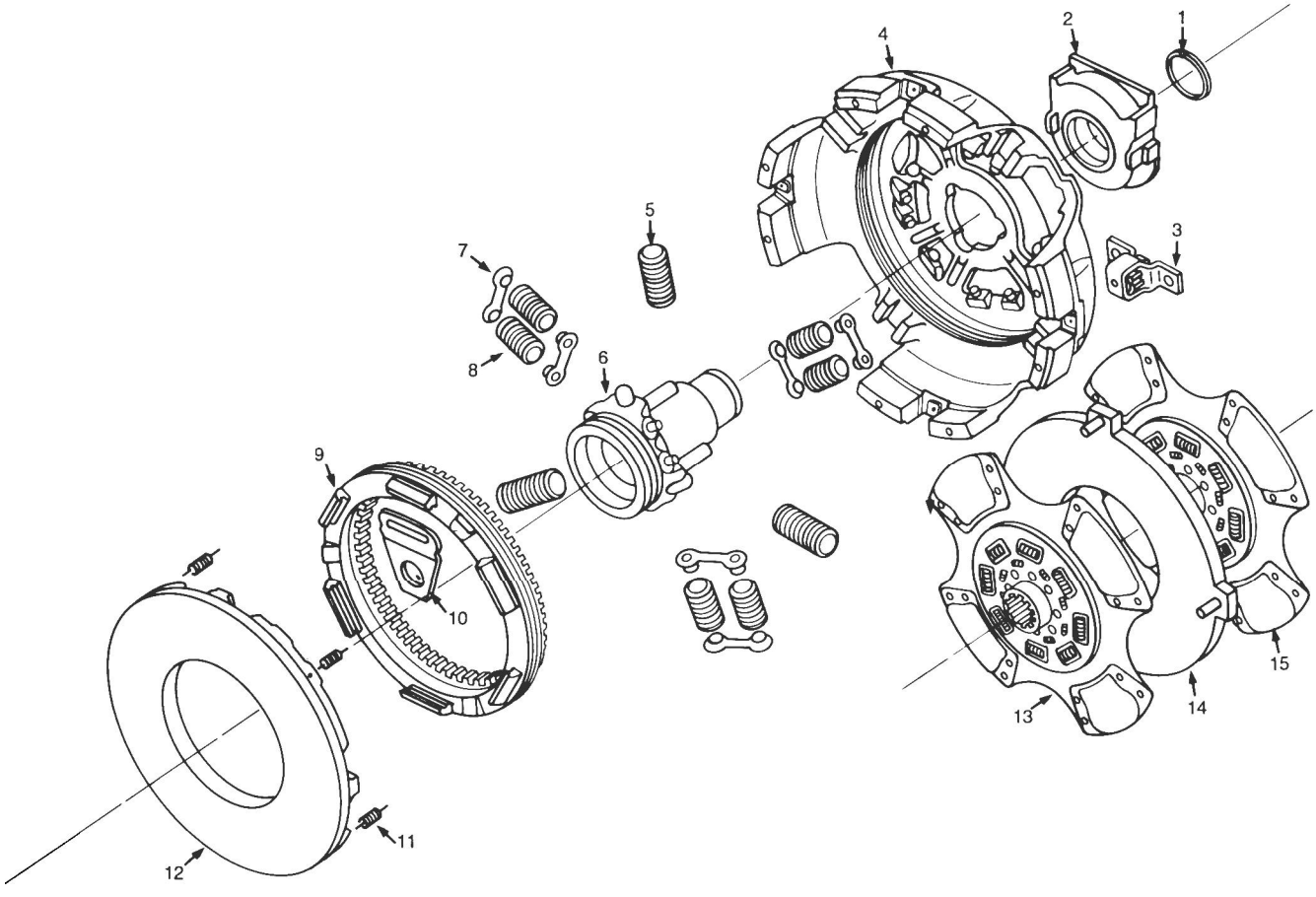

Spicer offers a 14' cast iron Flat Flywheel Clutch that will fit the same flywheel as existing 15 1/2" clutches. Only the Spicer 14" Flat Flywheel Clutch offers the following benefits:

- Mfimum engine torque rating of 1400 lb. ft.
- Improved ventilation and heat dissipation over pot type clutches.
- Standardizes flywheels of fleets (whether 14" or 151 /2").
- Greater heat sink—thicker pressure plate and intermediate plate are able to absorb more heat.
- Best possible engagement characteristics through the use of the ceramic Super Buttons.
- Lug Drive.
- Spice@ Angle-Spring design/reliability.
- Positive Separator

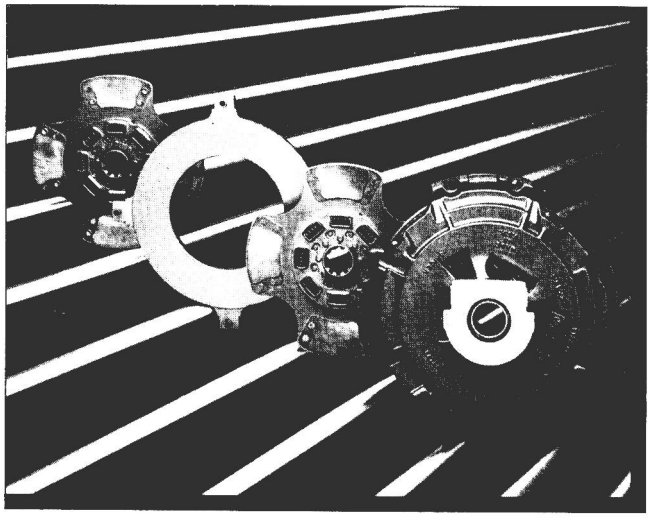

Note: This clutch comes with 14" dampened ceramic super-duty discs which cannot be mixed or matched with other discs.

For installing procedures: refer to page 13 under the caption; Installation of a 15 1/2" clutch.

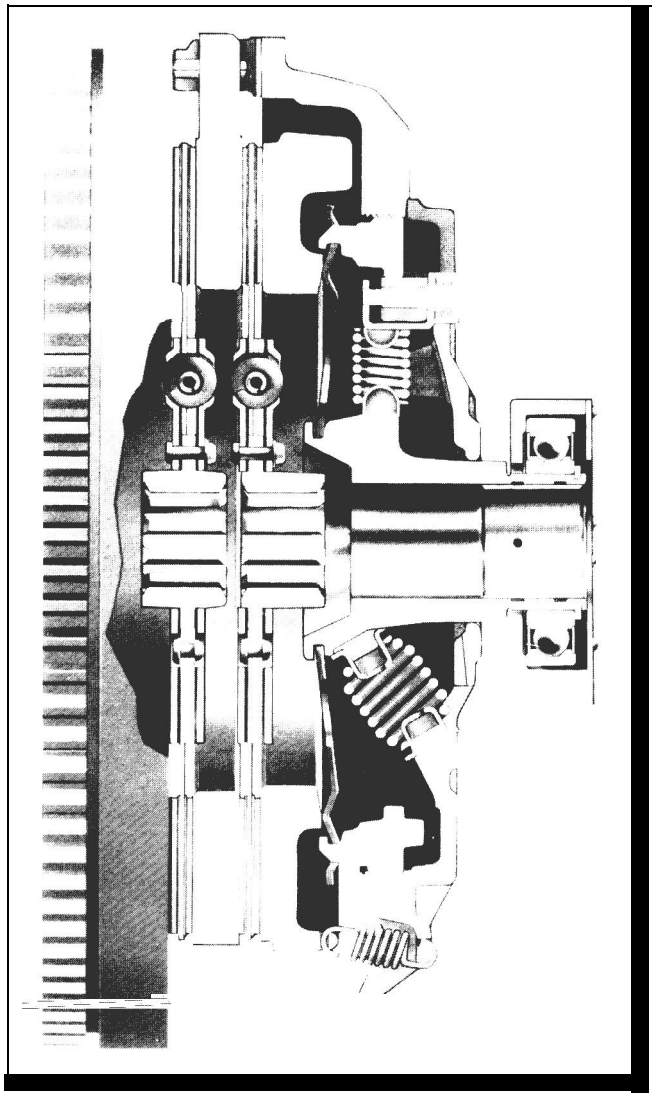

Spice® 14" Flat Flywheel Clutch easily mounts to 15 1/2" flywheel, without alterations.

NOTES

SpiceP Angle Spring Patents

U.S. Patent 4,760,906 & 4,936,432 (Easy-Pedal Angle-Spring Concept)
U.S. Patent 4,549,643 (Wear Compensator)
U.S. Patent 4,034,836 & 4,157,749 (Knife-Edge Levers)
U.S. Patent 4,254,855 (Co-axial Damper)
U.S. Patent 4,762,215 (Torque-Limiting Clutch Brake)
U.S. Patent 4,565,274 (Ceramic Super Button)

For more information, write:

Dana Corporation
Spicer Clutch Division
201 Brandon Street
Auburn, IN 46706-1695

SPICER CLUTCH DIVISION
AUBURN, IN

1-800-666-8688

SPICER®

DANA

Bulletin No. 1308-5SCD (Supersedes Bulletin No. 1308-4SCD). 01991 Dana Corporation 1-91/25M

SECTION 03: FUEL SYSTEM

CONTENTS

1. FUEL SYSTEM 03-2
    1.1 Description 03-2
2. FUEL LINES AND FLEXIBLE HOSES 03-3
3. FUEL VALVES 03-3
4. FILTERS AND WATER SEPARATOR 03-3
    4.1 Fuel Filter/Water Separator Servicing 03-3
    4.2 Fuel Filter Servicing (Primary and Secondary) 03-4
    4.3 Preheater Fuel Filter 03-5
5. FUEL TANK 03-5
    5.1 Fuel Tank Removal 03-7
    5.2 Fuel Tank Installation 03-8
    5.3 Fuel Tank Verification 03-8
    5.4 Polyethylene Fuel Tank Reparation 03-8
6. PRIMING FUEL SYSTEM 03-9
7. FUEL PUMP INSTALLATION 03-9
8. FUEL OIL SPECIFICATIONS 03-10
9. AIR CLEANER (dry type) 03-10
    9.1 Pre-Cleaner Servicing 03-10
    9.2 Air Cleaner Servicing 03-10
    9.3 General Recommendations 03-11
    9.4 Air Cleaner Restriction Indicator 03-11
10. FUEL PEDAL 03-11
    10.1 Fuel Pedal Adjustment 03-12
    10.2 Potentiometer Replacement 03-12
11. FUEL COOLER 03-13
12. SPECIFICATIONS 03-14

LIST OF ILLUSTRATIONS

FIG. 1: FUEL SYSTEM SCHEMATIC 03-2
FIG. 2: LOCATION OF MANUAL SHUT-OFF VALVES 03-3
FIG. 3: FUEL TANK 03-6
FIG. 4: FUEL TANK ACCESS PANEL LOCATION 03-7
FIG. 5: FUEL TANK CONNECTION PLATE 03-7
FIG. 6: FUEL TANK AND FILLER TUBES 03-7
FIG. 7: NUTS FOR FUEL TANK RETAINING STRAP 03-8
FIG. 8: POLYETHYLENE FUEL TANK REPARATION 03-9
FIG. 9: AIR CLEANER LOCATION 03-10
FIG.10: AIR CLEANER RESTRICTION INDICATOR 03-11

1. FUEL SYSTEM

1.1 Description

A schematic of the fuel system is shown in figure 1. Fuel is drawn from the fuel tank through a manual shut-off valve, the primary fuel filter or water separator (optional) and enters the fuel pump. Leaving the pump under pressure, the fuel flows through the secondary fuel filter and a shut-off valve, then to cylinder head. The fuel flows to injectors in the cylinder head through passages integral with the head. Surplus fuel exits at the rear of the head just above the inlet, through a restrictive return fitting which maintains fuel pressure in the system. Finally, the fuel flows through, fuel cooler, check valve then returns to the fuel tank. Two preheaters are available: 40 000 BTU or 80 000 BTU. If the vehicle is equipped with the 40 000 BTU preheater, the fuel is drawn from the tank through the fuel pump to the preheater. If the vehicle is equipped with the 80 000 BTU preheater the fuel is drawn from the fuel tank through a fuel filter to the preheater. Excess fuel returns to the fuel tank. Moreover, the vehicle may be equipped with a priming system.

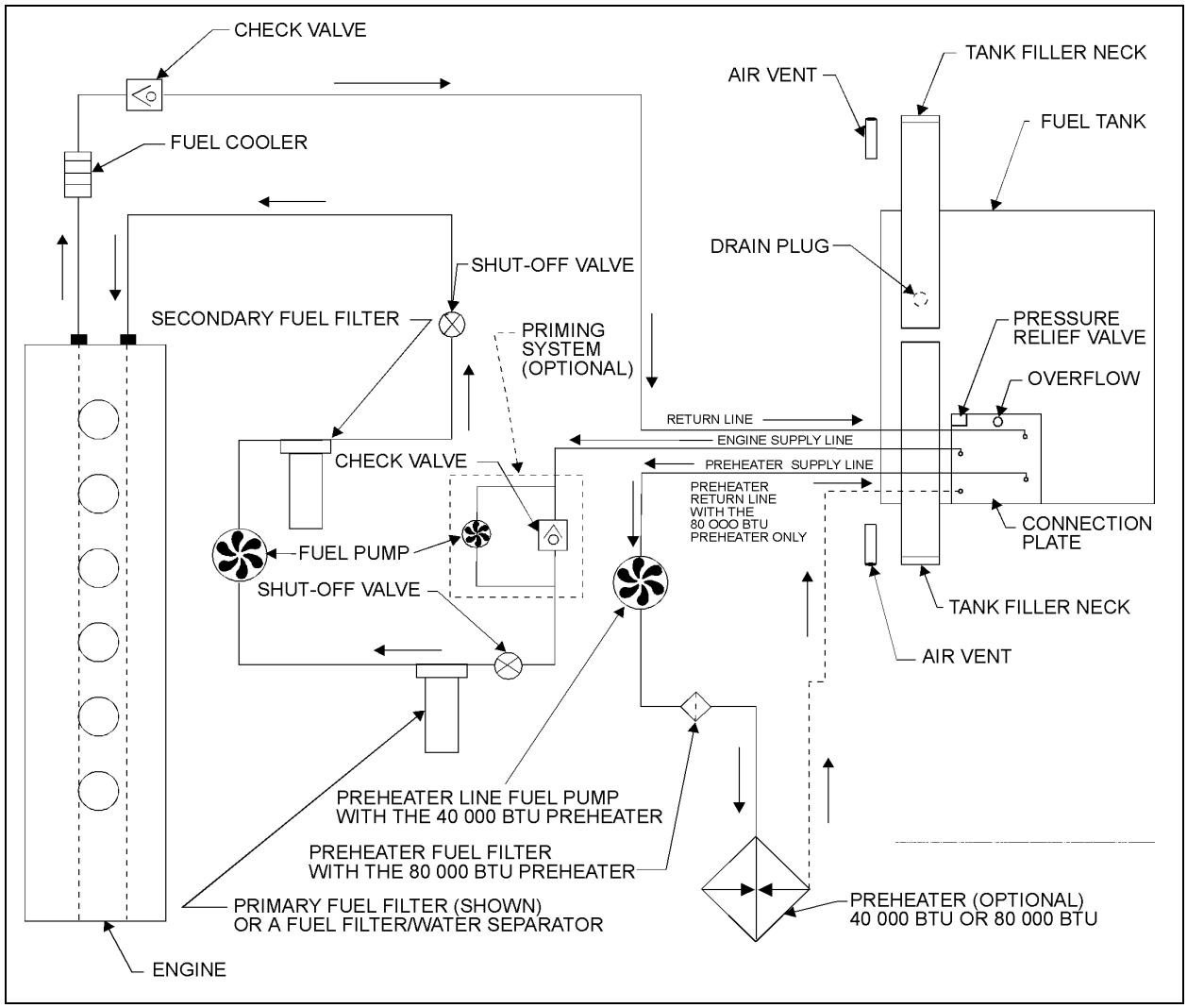

FIGURE 1: FUEL SYSTEM SCHEMATIC 03005

2. FUEL LINES AND FLEXIBLE HOSES

Make a visual check for fuel leaks at all engine-mounted fuel lines and connections and at the fuel tank suction and return lines. Since fuel tanks are susceptible to road hazards, leaks in this area may best be detected by checking for accumulation of fuel under the tanks. Engine performance and auxiliary equipment is greatly dependent on the ability of flexible hoses to transfer lubricating oil, air, coolant and fuel oil. Diligent maintenance of hoses is an important step in ensuring efficient, economical and safe operation of engine and related equipment.

Check hoses daily as part of the pre-start-up inspection. Examine hoses for leaks and check all fittings, clamps and ties carefully. Make sure that the hoses are not resting on or touching shafts, couplings, heated surfaces, including exhaust manifolds, any sharp edges or other obviously hazardous areas. Since all machinery vibrates and moves to a certain extent, clamps and ties can fatigue with age. To ensure continued proper support, inspect fasteners frequently and tighten or replace them as necessary. Refer to the schematic diagram of the fuel system (Fig. 1).

***Caution**: Oil level above the dipstick full mark or a decrease in lube oil consumption may indicate internal fuel leaks. Check oil level frequently.*

3. FUEL VALVES

Manual shut-off valves on engine fuel supply line are located on the R.H. side of engine compartment (Fig. 2). A manual shut-off valve is located at the inlet side of the primary fuel filter (fuel filter/water separator, if vehicle is so equipped) under the air compressor. Another manual shut-off valve is located at the outlet side of the secondary fuel filter, under the starter. No manual valve is required on preheater fuel supply line, since the positive-displacement fuel pump (located close to the fuel tank) will shut off line when it is not activated.

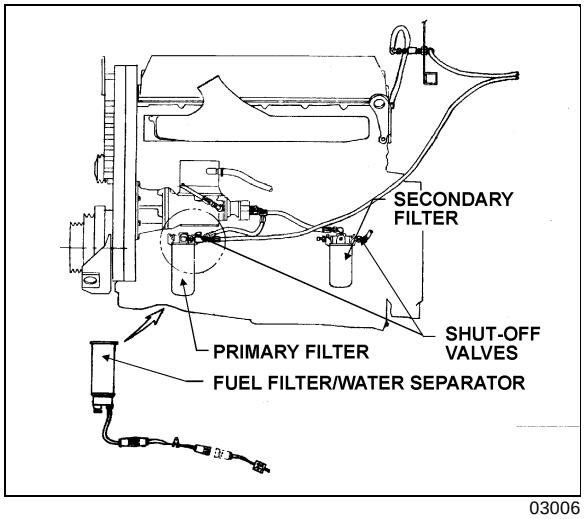

03006

FIGURE 2: LOCATION OF MANUAL SHUT-OFF VALVES

4. FILTERS AND WATER SEPARATOR

The fuel system is equipped with primary and secondary fuel filters for additional protection of the injectors. A fuel filter/water separator may be installed in primary fuel filter location, to prevent water infiltration in engine fuel system (Fig. 2). It should be drained periodically, or when the water separator indicator lamp lights on dashboard. To drain, loosen self venting drain below separator, and tighten after water has been flushed out. Refer to "SPIN-ON FILTER WATER SEPARATORS" annexed at the end of this section.

***Note:** The service intervals of the filter/water separator element and the secondary fuel filter cartridge are determined by the operating conditions and cleanliness of type of fuel used.*

4.1 Fuel Filter/Water Separator Servicing

The fuel filter/water separator is located on starter side of the engine, below the air compressor. The water separator must be drained periodically or when the indicator light on the central dashboard panel illuminates.

Replace the water separator element as follows :

1. Drain the fuel filter/water separator. Refer to paragraph "4. FILTERS AND WATER SEPARATOR" in this section.

2. With engine "OFF" and engine fuel supply line valves closed, remove the filter element from mounting head with bowl connected (For valve location, refer to paragraph "3. FUEL VALVES" in this section).

3. Remove bowl from filter element. Clean bowl and O-ring gland.

Note: *Bowl is reusable, do not discard.*

4. Lubricate O-ring with clean diesel fuel or motor oil and place it in bowl gland.

Caution: *Do not use tool to tighten bowl. Tighten by hand only.*

5. Spin bowl onto new filter element snugly by hand.

6. Lubricate filter to seal with clean diesel fuel or motor oil.

7. Fill filter element/bowl assembly with clean diesel fuel and attach onto mounting head. Hand tighten an additional 1/3 to 1/2 turn after full seal contact is made.

8. Open valves of the engine fuel supply line.

9. Run the engine and check for leaks.

Caution: *If the water separator continuously requires draining, it is possible that water or sediment is accumulated in the fuel tank. To correct this situation, open the drain plug under the tank when the fuel gauge indicates tank is 1/4 full in order to drain any contaminant.*

4.2 Fuel Filter Servicing (Primary and Secondary)

The primary and secondary fuel filters are located on the R.H. side of the engine compartment. The primary filter is installed on the engine below the air compressor, and the secondary fuel filter is below the starter. They are of a spin-on type and must be replaced every 12,000 miles (20 000 km) or once a year, whichever comes first.

A method of determining when filters are plugged to the extent that they should be changed is based on the fuel pressure at the cylinder head fuel inlet fitting and the inlet restriction at the fuel pump. In a clean system, the maximum pump inlet restriction should not exceed 6 inches of mercury (20.3 kPa) and must not exceed 12 inches of mercury (41 kPa) with a dirty system.

At normal operating speeds and with the standard 0.080" restriction fittings, the fuel pressure at the cylinder head inlet is 50-75 psi (345-577 kPa). Change the fuel filters whenever the inlet restriction at the fuel pump reaches 12 inches of mercury (42 kPa) at normal operating speeds and whenever the fuel pressure at the cylinder head inlet fitting falls to the minimum fuel pressure given above.

Change the filter cartridge(s) as follows :

Note: *Use a suitable band wrench or filter wrench, such as J22775, to remove the filters.*

1. Stop engine, shut off the engine fuel supply line valves (For valve location, refer to paragraph "3. FUEL VALVES" in this section). Unscrew and discard filters.

2. Fill new filter replacement cartridge(s) with clean fuel oil, about two thirds (2/3). Apply a thin coat of clean fuel oil on gasket.

3. Install new filters. Tighten until filter is snug against the gasket, with no side movement. Rotate an additional 1/2 turn by hand.

4. Open engine fuel supply line valves.

Caution: *Mechanical tightening of the fuel filters is not recommended and may result in seal and/or cartridge damage. Tighten the fuel filters by hand only.*

5. Start the engine and check for leaks.

Note: *There is a fuel system shut-off valve on the discharge side of the secondary fuel filter. This check valve is designed to prevent loss of fuel at time of filter replacement.*

4.3 Preheater Fuel Filter

The preheater fuel filter is installed on the vehicle only with the optional 80 00 BTU preheater. The filter is located in the rear electric compartment. Replace the filter every 50,000 miles (80 000 km) or once a year, whichever comes first.

5. FUEL TANK

The vehicle is equipped with a high density cross link polyethylene fuel tank with a capacity of 230 US gal (871 liters). The tank is located next to the last baggage compartment, between condenser and HVAC unit compartments (Heating, Ventilation and Air Conditioning) (Fig. 3).

Dual filler necks are provided to refuel from either side of vehicle; the left side fuel filler neck is accessible through a fuel filling access door, while access to the right filler neck is possible through the refrigerant dryer access door (see *"Operator's Manual"* for details).

A pressure relief valve on the fuel tank connection panel relieves high pressure buildup, and an overflow tube allows offset air in the tank to escape during filling. For 95% of the tank volume, a safety 5% of tank inside space is kept filled with air with no exit opening. A drain plug, accessible from under the vehicle, is fitted at the bottom of the tank.

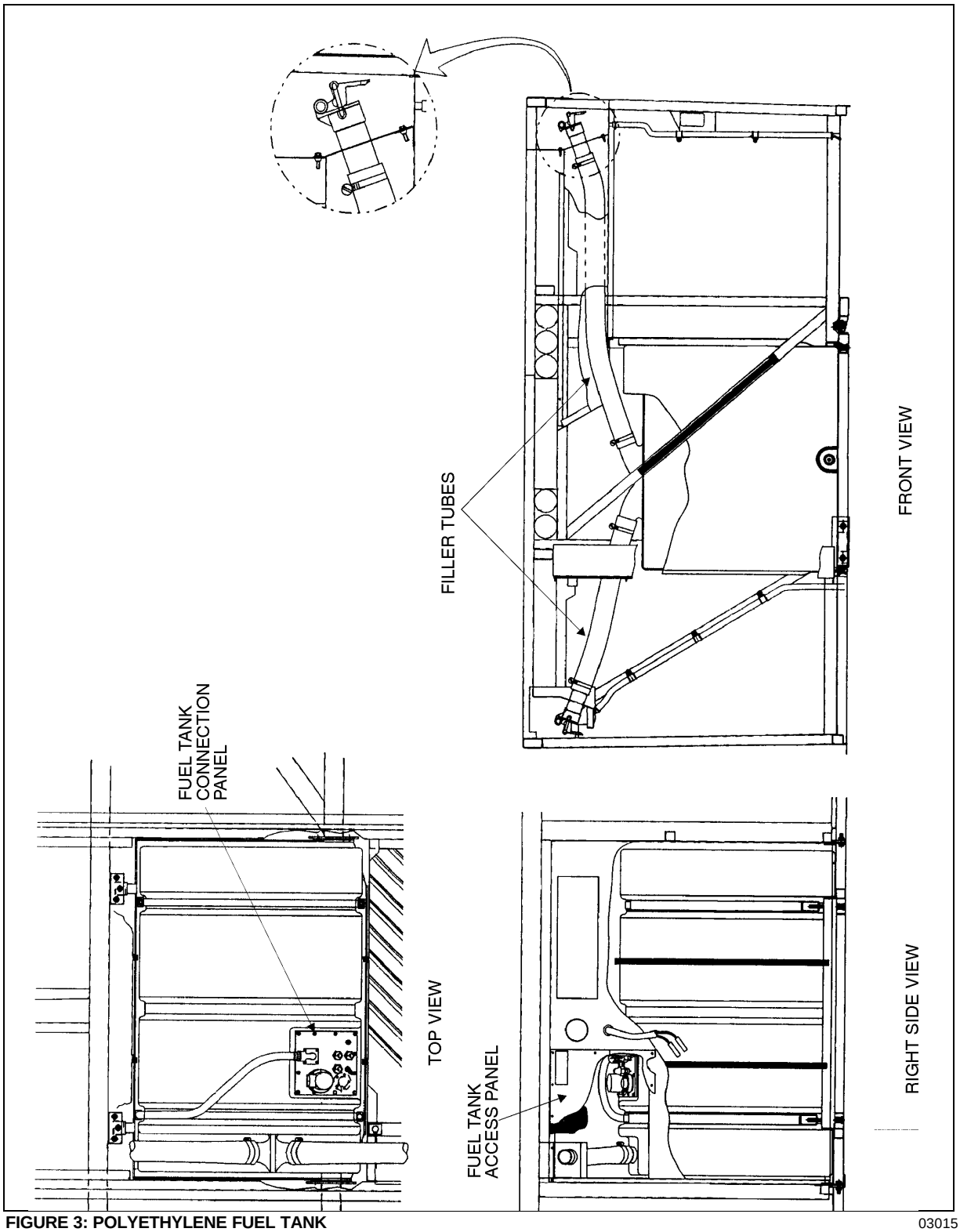

FIGURE 3: POLYETHYLENE FUEL TANK 03015

5.1 Fuel Tank Removal

Warning: *Park vehicle safely, apply parking brake, stop engine and set battery master switch(es) to the* OFF *position prior to working on the vehicle.*

Prior to working under a air-suspended vehicle, it is strongly recommended to support the body at the recommended jacking points.

Note: *Prior to removal, the fuel tank should be completely drained by unscrewing the drain plug. Ensure that the container used has a capacity equal to the amount of fuel remaining in the tank (total capacity of the tank is 230 U.S. gallons or 871 liters.*

1. Open the condenser door (refer to *"Operator's Manual"* for details). Remove the fuel access panel (Fig. 4).



OEH3B82

FIGURE 4: FUEL TANK ACCESS PANEL LOCATION

2. Unscrew clamp retaining L.H. side filler tube to the fuel tank, then disconnect tube and remove it.
3. Unscrew clamps retaining R.H. side filler tube to fuel tank and filler neck. Disconnect tube and remove it.
4. If applicable, Unscrew preheater supply line, preheater return line, auxiliary return line and/or auxiliary return line from fuel tank connection panel (Fig. 5).
5. Unscrew engine supply and return lines from fuel tank connection panel, identify them for reinstallation.

Disconnect electric wiring from tank (wires 0, *76* and 76C from terminals G, S and L, on connection plate (Fig. 5).

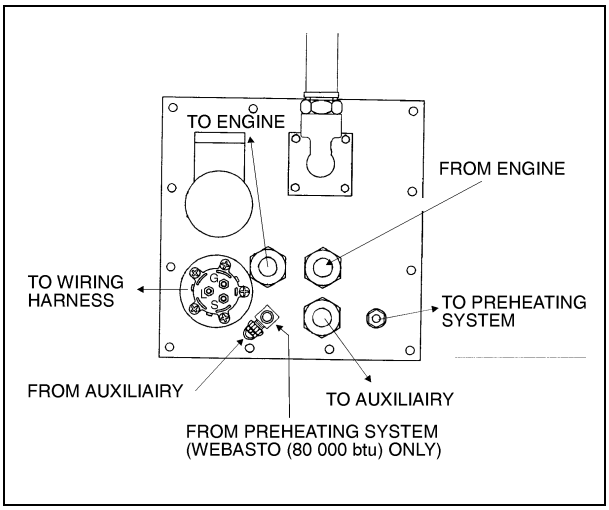

FIGURE 5: FUEL TANK CONNECTION PLATE 03017

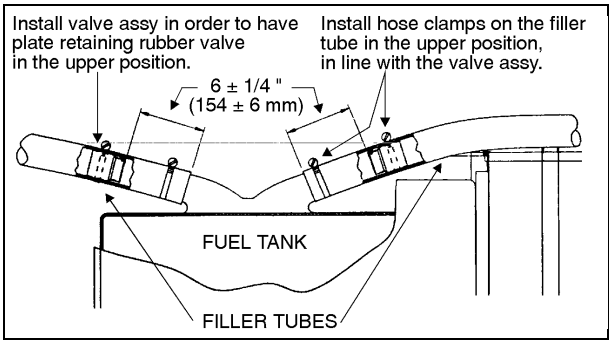

03016

FIGURE 6: FUEL TANK AND FILLER TUBES

Warning: *Before removing the bolts securing the tank to the frame, make sure the tank is supported adequately. Failure to do so could result in injury as well as damage to the tank.*

7. From under the vehicle, on R.H. side, unscrew the 4 bolts (2 in front, 2 in back) retaining the tank support to the frame bracket.
8. From under the vehicle, on the L.H. side, unscrew the 6 bolts (3 in front, 3 in back) retaining the tank support to the frame bracket. Remove the 2 mounting plates located between the tank support and the frame brackets.
9. Carefully remove tank from under the vehicle.

5.2 Fuel Tank Installation

Installation is the reverse of removal.

Note: *Fastening of rubber flap must always be on*
top, in line with clamp screw (Fig. 6).

Note: *Insert check valve assembly in right side filler hose (Fig. 6), use hose clamp to fix it. Repeat with left side filler hose.*

Note: *When reinstalling lines used Loctite 567™ type thread sealant on line fittings.*

Note: *Under vehicle, locate fuel tank and the four nuts retaining the two fuel tank retaining straps.*

For each of the four nuts (Fig. 7) :

1. *Clean nut and stud threads.*
2. *Apply a Loctite 242™ type removable threadlocker on stud threads.*
3. *For installation of an old fuel tank, screw nut back again up to coils to touch themself.*

   For installation of a new fuel tank, screw nut back again up to coils to touch themself and unscrew nut 3,5 of a turn.

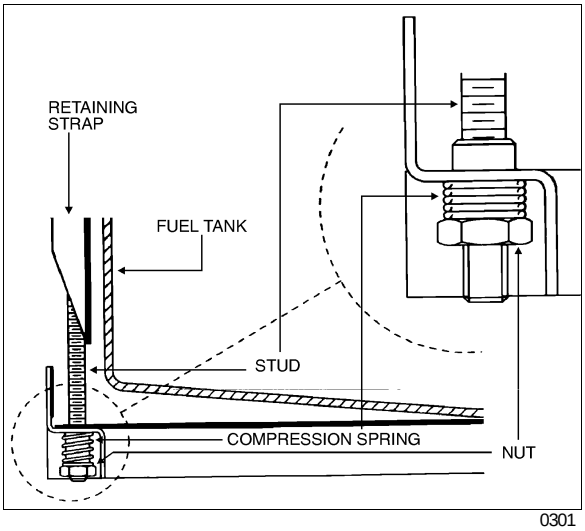

FIGURE 7: NUTS FOR FUEL TANK RETAINING STRAP

5.3 Fuel Tank Verification

Warning: *Park vehicle safely, apply parking brake, stop engine and set battery master switches to the* OFF *position prior to working on the vehicle.*

Prior to working under a air-suspended vehicle, it is strongly recommended to support the body at the recommended jacking points.

Inspect fuel tank from under vehicle for leak or fuel trace. If leak is detected, proceed with the following procedure otherwise, don't perform it.

5.4 Polyethylene Fuel Tank Reparation

Note: *Before beginning this procedure, make sure that fuel level is less than half.*

Warning: *Park vehicle safely, apply parking brake, stop engine and set battery master switches to the* OFF *position prior to working on the vehicle.*

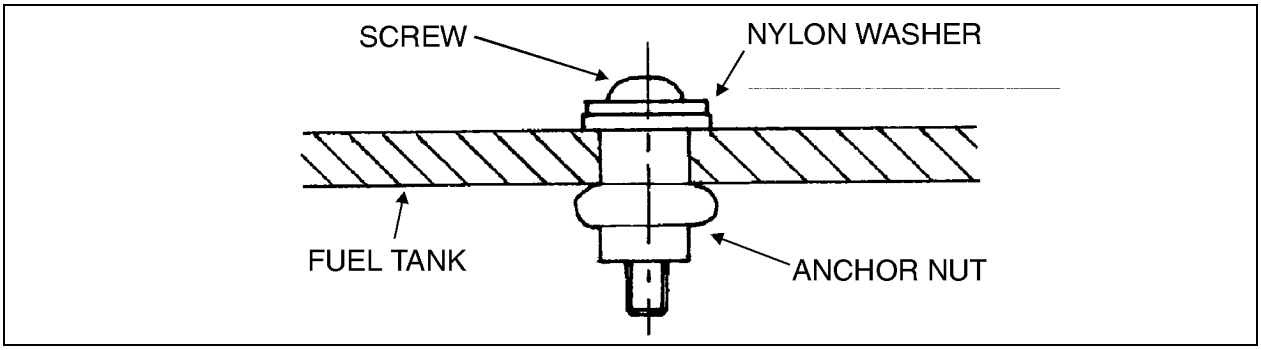

FIGURE 8: POLYETHYLENE FUEL TANK REPARATION 03014

1. In the condenser compartment, locate hole of former retaining clip's screw.
2. Locate perforation on the fuel tank, and with a $^{23}/_{64}$" bit, drill perforation on fuel tank to have a perfect round hole.
3. Insert screw (Prévost #500196) in washer (Prévost #5001244) and anchor nut (Prévost #500331) without deforming anchor nut.
4. Insert assembly in the hole on the fuel tank, and tighten by doing 10 complete turns of screw (Fig. 8).
5. Apply sealant on head plug (Prévost #507300) and seal hole with the head plug.

6. PRIMING FUEL SYSTEM

The problem with restarting an engine that has run out of fuel, is that after the fuel is exhausted from the tank, it is pumped from the primary fuel filter or the fuel filter/water separator, if vehicle is so equipped, and sometimes partially removed from the secondary filter resulting in an insufficient fuel supply to sustain engine firing. The primary fuel filter or fuel filter/water separator and secondary filter must be free of air in order for the systems to provide adequate fuel for the injectors. When the engine runs out of fuel, the following operations must be performed before restarting.

Fill fuel tank with the recommended fuel oil. If only partial filling is possible, add a minimum of 10 gallons (38 liters) of fuel.

Vehicle equipped with optional priming pump (Fig. 1)

Start the priming pump. The switch is located in the engine compartment and mounted on a small box above the engine (between the starter button and the starter selector switch). Start the engine and check for leaks.

Vehicle not equipped with priming pump

1. Unscrew the cap on the priming valve located on the secondary filter.
2. Direct fuel under pressure 25 psi (172 kPa) to the priming valve using a quick coupling.
3. Start the engine and check for leaks.

7. FUEL PUMP INSTALLATION

The fuel pump is attached to a drive assembly mounted on the rear side of the gear case.

1. If removed, install inlet and outlet fittings in the cover of the fuel pump.

Note: *New fittings have sealant already applied. If reusing fittings, coat the threads lightly with Loctite Pipe Sealant, Detroit Diesel number J 26558-92, or equivalent, before installing. To prevent sealant from entering fuel system, do not apply it to the first two (2) threads of the fitting. Do not use teflon tape or paste on the fittings.*

2. Install drive coupling in drive hub of the fuel pump. Install a new gasket to the mounting flange of the pump.

3. Align the drive coupling with the coupling on the fuel pump drive assembly pump mounting bolt holes with those in the fuel pump drive assembly.

4. Seat the pump squarely against the drive assembly. Install three (3) fuel pump mounting bolts and tighten them to 22-28 lbf•ft (30-38 N•m).

5. Connect the fuel inlet and outlet lines to the fuel pump and tighten.

6. Prime engine fuel system before starting engine to ensure pump seal lubrication and prompt engine starting.

8. FUEL OIL SPECIFICATIONS

The quality of fuel oil used for high speed diesel engine operation is a very important factor in obtaining satisfactory engine performance, long engine life and acceptable exhaust emission levels. The fuel oil should meet ASTM designation D 975. Grade 1-D is recommended, but grade 2-D is also acceptable.

Note: *These fuel grades are very similar to grade DF-1 or DF-2 of Federal Specifications VV-F-800. For detailed fuel recommendations, refer to publication "Engine Requirements-Lubricating Oil, Fuel, and Filters" #7SE270 available from Detroit Diesel Distributors.*

9. AIR CLEANER (dry type)

H3 vehicles are equipped with a two-stage, dry-type, replaceable element air cleaner, located in the engine compartment. To service the air cleaner, open the R.H. side engine compartment door. Engine air enters the air cleaner through an intake duct integrated to the R.H. side of the rear cap, next to the last window of vehicle, then flows through a pre-cleaner and finally through the air cleaner.

The pre-cleaner removes dust and moisture from air and drains dust and moisture by means of a discharge tube at the bottom of the pre-cleaner. The pre-cleaner is in series with a replaceable impregnated paper filter element (air cleaner) (Fig. 9).

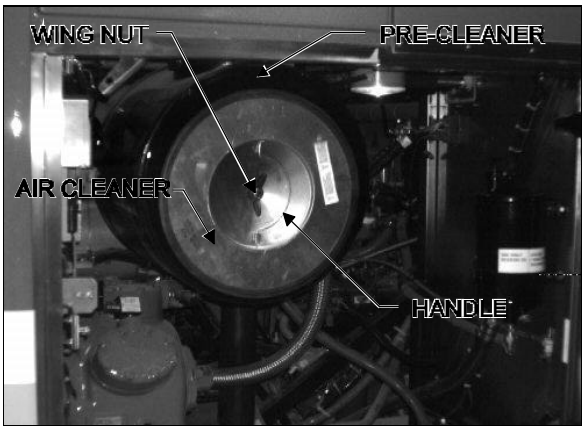

FIGURE 9: AIR CLEANER LOCATION 03007

9.1 Pre-Cleaner Servicing

The pre-cleaner is designed to be self-cleaning; however, it should be inspected and any accumulated foreign material removed during the periodic replacement of the impregnated paper filter element.

9.2 Air Cleaner Servicing

Stop the engine, open the R.H. side engine compartment door, and loosen the wing nut retaining the air cleaner element to the air cleaner. Remove the element by pulling on the handle in the center of the air cleaner element.

Install cleaner element as follows:

1. Inspect the gasket sealing surface inside the air cleaner. It must be smooth, flat and clean.

2. Install the air cleaner element.

3. Make sure that the element seals securely.

Inspect element cover gasket and replace if necessary.

Whenever it becomes necessary to remove the air cleaner assembly (dry type) for maintenance or other repair in this area, great care should be taken when installing air cleaner assembly.
The pre-filter should be installed snugly in the air duct and clamped tightly to the air cleaner inlet to prevent any dust infiltration into the air cleaner.

9.3 General Recommendations

The following maintenance procedures will ensure efficient air cleaner operation:

1. Keep the air cleaner housing tight on the air intake pipe.
2. Make sure the correct filters are used for replacement.
3. Keep the air cleaner properly assembled so the joints are air-tight.
4. Immediately repair any damage to the air cleaner or related parts.
5. Inspect, clean or replace the air cleaner or elements as operating conditions warrant. Whenever an element has been removed from the air cleaner housing the inside surface of the housing must be cleaned with a soft clean cloth.
6. Periodically inspect the entire system. Dust-laden air can pass through an almost invisible crack or opening which may eventually cause damage to an engine.
7. Never operate the engine without an element in the air cleaner assembly.
8. Do not ignore the warning given by the air restriction indicator. This could result in serious engine damage.
9. Store new elements in a closed area free from dust and possible damage.

9.4 Air Cleaner Restriction Indicator

A resettable restriction indicator is installed on the engine air intake duct near the turbocharger in the engine compartment, to constantly monitor the level of vacuum between the air cleaner and engine in order to detect and indicate an abnormal increase in vacuum due to a dirt-laden and therefore restricted air cleaner element.

When the red signal flag locks in full view, the air cleaner element must be inspected and replaced if necessary. The indicator flag must be reset by pressing on its extremity (Fig. 10).

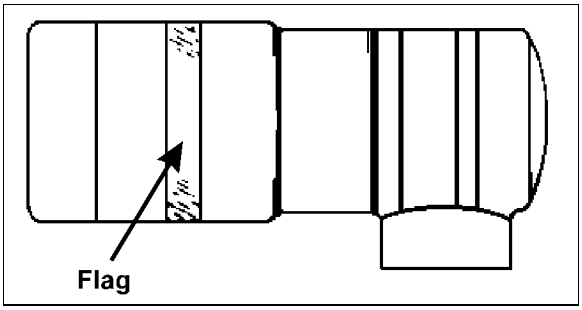

OEH3B744

FIGURE 10: AIR CLEANER RESTRICTION INDICATOR

10. FUEL PEDAL

The EFPA (Electronic Foot Pedal Assembly) connects the accelerator pedal to a potentiometer (a device that sends an electrical signal to the ECM which varies in voltage, depending on how far down the pedal is depressed). The EFPA is installed in the space normally occupied by a mechanical foot pedal. It has maximum and minimum stops that are built into the unit during manufacture.

10.1 Fuel Pedal Adjustment

The EFPA contains a throttle position sensor that varies the electrical signal sent to the ECM. The sensor must be adjusted whenever an EFPA is serviced. In addition, the sensor should be adjusted any time codes 21 and 22 are flashed.

With the ignition "ON" and the proper diagnostic tool (DDR) (for information regarding the DDR, refer to section 01 "*ENGINE*"), check the throttle counts at idle and full throttle positions. Proper pedal output should be 20/30 counts at idle and 200/235 at full throttle. If adjustment is necessary remove the potentiometer cover, loosen the retaining screw and rotate the potentiometer clockwise to increase counts or counterclockwise to decrease. When correct output is confirmed, tighten retaining screws and reinstall the potentiometer cover.

10.2 Potentiometer Replacement

1. Remove the electronic foot pedal assembly from the vehicle.

Caution: *Note the routing and clamping locations of the cable before disassembly. Proper cable routing and fastening is critical to the operation of this system. Marking the foot pedal assembly to record cable routing is recommended.*

2. Discard screws (1, Fig. 11) and cable clamps (2, Fig. 11) securing wire.

3. Loosen the three (3, Fig. 11) screws and remove potentiometer cover. Retain for reassembly.

4. Discard potentiometer (3, Fig. 11), screws (4, Fig. 11), washers (5, Fig. 11) and grommet (6, Fig. 11).

5. Position new potentiometer (3, Fig. 11) with flat side towards you. Press potentiometer onto the potentiometer shaft (7, Fig. 11), matching cutouts in shaft to drive tangs of potentiometer. Apply hand pressure until potentiometer has bottomed out in housing. Install new screws and washers (4 & 5, Fig. 11) and tighten just enough to lightly secure potentiometer. Rotate potentiometer counterclockwise as far as possible. Tighten screws to 10-20 lbf•in (1.1-2.2 N•m).

7. Install new cable clamps and screws (1 & 2, Fig. 11), making sure new potentiometer's wire harness is routed in the same manner as the original harness. Tighten screws to 34-45 lbf•in (3.7-5 N•m).

8. Connect electronic foot pedal assembly's cable harness to the ECM connector. Then, Potentiometer calibration is now necessary (Refer to paragraph *"11.1 FUEL PEDAL ADJUSTMENT"* in this section). When correct output is confirmed, install the pedal assembly in its proper location.

Caution: *Make sure the cable harness is routed correctly, and securely installed so that it does not become pinched, stretched, or otherwise damaged during vehicle operation.*

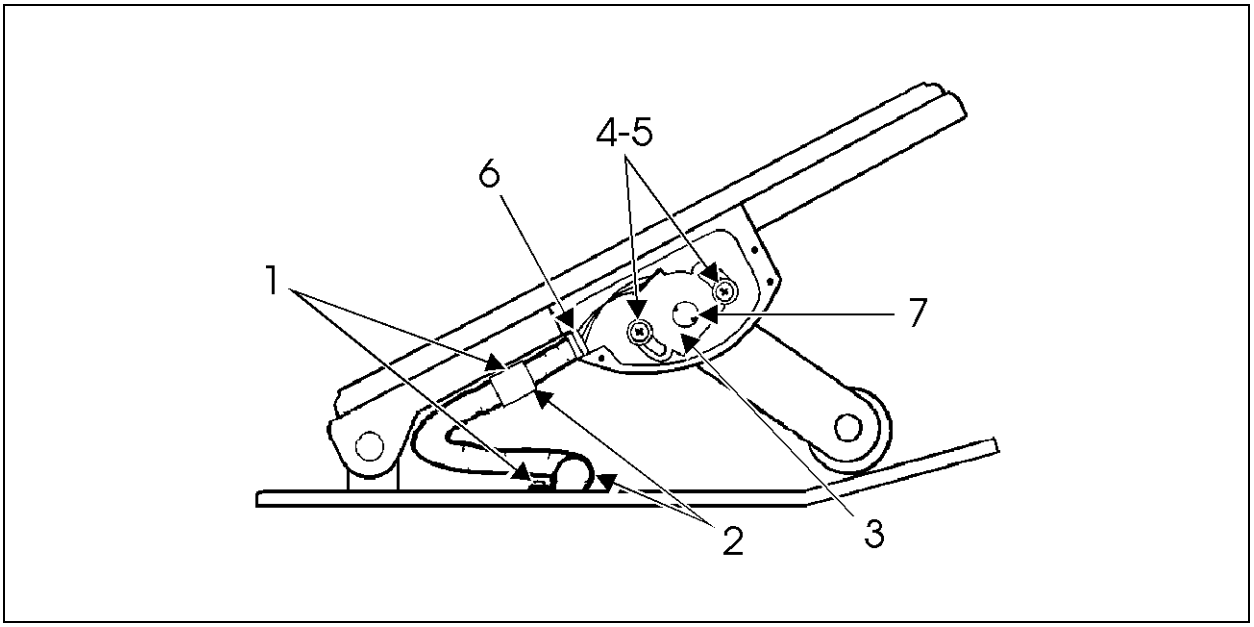

FIGURE 11: ELECTRONIC FOOT PEDAL ASSEMBLY 03010

11. FUEL COOLER

The fuel cooler serves to cool the surplus diesel fuel after it has exited the cylinder head, on its way back to fuel tank. It is accessible through engine L.H. side door and is located just in front of radiator.

12. SPECIFICATIONS

Primary/Water Separator (optional)
(May be used instead of the primary filter (never use with a primary filter))
Make ..... Racor
Type ..... Spin-on

ELEMENT
Supplier number ..... S 3202
Prevost number 531390

BOWL
Supplier number RK30051
Prevost number 531389

DRAIN VALVE AND SEAL
Supplier number RK30058
Prevost number 531397

O-RING
Supplier number RK30076
Prevost number 531398

PROBE/WATER SENSOR
Supplier number RK21069
Prevost number 531391

Primary Fuel Filter (Standard)
Make ..... AC
Type ..... Spin-on
Service Part No
(Type with water separator) 23512317
Prevost number 531407
Element torque ..... 1/2 turn after gasket contact

Secondary Fuel Filter
Make ..... AC
Type ..... Spin-on
Filter No. T-916D
Service Part No. 25014342
Fuel filter Prevost number 510128
Element torque ..... 1/2 turn after gasket contact

Fuel tank
Capacity ..... 230 US gal (871 liters)

Air Cleaner
Make ..... Nelson
Prevost Number 530206
Element cartridge supplier number 70337-N
Element cartridge Prevost number 530197

Pre-Cleaner
Make ..... Donaldson
Model PVH001220
Prevost number 530207

Air Restriction Indicator
Make ..... Donaldson
Model RAX00-2320
Indicates ..... at 20" (508 mm) of water
Prevost number 530161

Preheater Fuel Filter (80 000 BTU)
Make ..... Webasto
Supplier number 603.359
Prevost number 871037

Preheater Line Fuel Pump
Supplier number 25-1571-45-0000
Prevost number 870973

Material For Polyethylene Fuel Tank Reparation

Part No	Description	Qty
5001096	Screw	1
500331	Anchor nut (neoprene)	1
5001244	Nylon washer	1
507300	Nylon domed head plug	1

SPIN-ON FILTER/SEPARATORS

THE RACOR 20 SERIES SPIN-ON FUEL FILTER WATER SEPARATORS CAN SOLVE DIESEL FUEL PROBLEMS UNDER ANY OPERATING CONDITIONS IN THE WORLD

Advanced Filtration/ Separation Technology

The unique design of the 20 Series directs the fuel flow to the expanded center core of the unit The reduced velocity causes heavy liquid and solid contaminants to accumulate in the in-inner chamber of the filter/separator bowl Then they are drained off through a positive seal dram valve. This primary separation or pre-cleanmg stage gives extended element life.

The 20 Series Filter'Separator units are compact and easy to service.

Vacuum (Suction) Applications

The *Dual Media Replacement Filter Element* uses a new Racer two-stage process of Dual Phase Repelling Action and Dual Phase Filtration to remove virtually 100% of the remaining free water and damaging solid particulate contaminants from diesel fuel. Primer pump, vent cap and check valve are standard.

pressure Applications

The *Multi-Media Coalescer Replacement Filter Element* IS for pressure side installations where the fuel has passed through a transfer pump and a coalescing filtration action IS necessary for a high degree of water removal effectiveness. With the coalescer replacement filter element, 99 +'% of free and emulsified water an damaging solid particulate contaminants are removed. Vent cap is standard

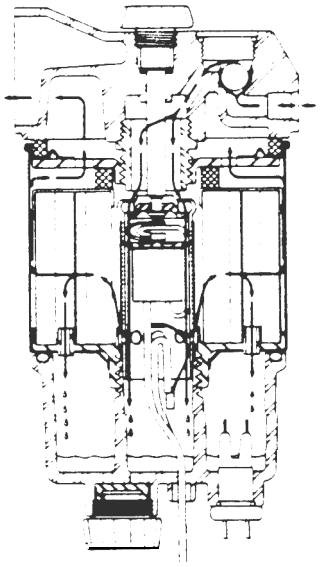

Options

Electrical in-filter heater
Metal Bowl
Service Indicator Package
(water sensor and element change monitor)



220

Height 8" (203 mm)
Width 4" (102 mm)
Depth 4" (l02 mm)
Max Flow Rate 30 gph (114 lph)
Weight 1 75 lbs (79 kgs)

Element Model No	**R24 Dual Media**	**C25 Coalescer**
Dirt Capacity (Soft C-2A)	80 gms	75 gms
Dirt Removal Rating	96% at 2 micron w/A C F T D	
Water Removal Efficiency Effluent:	less than 10ppm free water	less than 30ppm free water

225

Height 9 5" [241 mm)
Width 4"(102 mm)
Degth 4"(102 mm)
Max Flow Rate 45 gph(170 lph)
Weight 2 lbs (90 kgs)

Element Model No	**R26 Dual Media**	**C27 Coalescer**
Dirt Capacity (Soft C-2A)	117gms	107 gms
Dirt Removal Rating	96% at 2 micron w/A C F T D	
Water Removal Efficiency Effluent	less than 10ppm free water	less than 30ppm tree water

FUEL ADDITIVES

Racer additives are specially formulated to be completely compatible with engines, fuel filters and water separators. They contain no damaging alcohol and keep fuel in the best possible condition for all diesel engine applications.

SUPER CONCENTRATED. COMPARE TREATMENT COST PER GALLON OF FUEL.

Racer RX-100
Cold Weather Diesel Additive

- Contains a pour pant depressant fuel conditioner
- Keeps fuel flowing down to —40°F(—400°C).
- Improves engine performance reduces engine wear
- Eases starting, aids combustion, prevents corrosion
- Eliminates waxing and clogged filters
- Cleans fuel lines, pumps and Injectors

Part No.	Typo	Size	Treatement
11-1179	Rx-1OO	10 oz	15-30 Gallons
11-1180	RX-1OO	32 oz	150-200 Gallons
11-1181	RX-1OO	1 gal.	1,000 Gallons
11.1264	RX-1OO	2.5 gal.	5,000 Gallons
11-1265	RX-1OO	20 gal.	55,000 Gallons

(Continued on Page 16

Racer RX-200
Diesel Treatment

- Improves engine performance
- Cleans fuel lines pumps and injectors
- Eases starting and prevents corrosion

Part No.	Typo	Size	Treatment
11-1270	RX-200	10 oz.	One 10 oz Can Per Tankful
11-1274	RX-200	32 oz.	150.200 Gallons

Racer RX-300
Marine Diesel Treatment

Formulated for diesel fuel in a marine environment, RX-300—

- Contains a biocide and fuel conditioner
- Prevents fungi, bacteria and algae growth
- Cleans fuel lines, pumps and Injectors
- Improves engine performance
- Provides rust protection and lubrication throughout the entire system

Part No.	Typo	Size	Treatment
11.1266	RX-300	10 oz	50 Gallons
11.1267	RX-300	32 oz	500 Gallons
11.1268	RX-300	1 gal.	5,000 Gallons
11-1269	Rx-300	20 gal.	100,000 Gallons

BUTT SPLICE
Installation Instructions

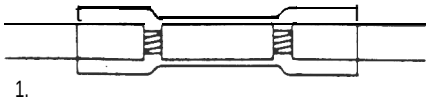

1. Select splice of appropriate size Strip wires O 3". Insert into crimp barrel

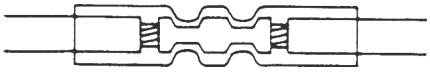

2. Crimp using crimp tool for preinsulated crimps.



3. Heat splice with heat gun until tubing recovers and adhesive flows.

RACOR LIMITED WARRANTIES STATEMENT

All products manufactured or distributed by Racer are subject to the following, and only the following, LIMITED EXPRESS WARRANTIES and no others:

For a period of one (1) year from and after the date of purchase of a new Racer product, Racer warrants and guarantees only to the original purchaser-user that such a product shall be free from defects o? materials and workmanship in the manufacturing process. The warranty period for pumps and motors is specifically limited to ninety (90) days from date of purchase. A product claimed to be defective must be returned to the place of purchase. Racor, at its sole option, shall replace the defective product with a comparable new product or repair the defective product. This express warranty shall be inapplicable to any product not properly installed and properly used by the purchaser-user or to any product damaged or impaired by external forces. THIS IS THE EXTENT OF WARRANTIES AVAILABLE ON THIS PRODUCT. RACOR SHALL HAVE NO LIABILITY WHATSOEVER FOR CONSEQUENTIAL DAMAGES FLOWING FROM THE USE OF ANY DEFECTIVE PRODUCT OR BY REASON OF THE FAILURE OF ANY PRODUCT. RACOR SPECIFICALLY DISAVOWS ALL OTHER WARRANTIES, EXPRESS OR IMPLIED INCLUDING, WITHOUT LIMITATION, ALL WARRANTIES OF FITNESS FOR A PARTICULAR PURPOSE (EXCEPT FOR THOSE WHICH APPLY TO PRODUCT OR PART THEREOF THAT IS USED OR SOUGHT FOR USE PRIMARILY FOR PERSONAL. FAMILY, OR HOUSEHOLD PURPOSES), WARRANTIES OF DESCRIPTION, WARRANTIES OF MERCHANTABILITY, TRADE USAGE OR WARRANTIES OF TRADE USAGE.

Parker Hannifin Corporation
Racor Division
PO Box 3208
Modesto, CA 95353 USA
800/34-3286 209/521-7860
Telex 359-408 RACOR MSTO

For the name of the Racor distributmor nearest you, call 1-800 -344 -3286
In Alaska California and Hawaii, call 1-209-521-7860

INSTALLATION INSTRUCTIONS
Racor Part No 7091FG
9-90/24M

SECTION 04: EXHAUST SYSTEM

CONTENTS

1. MAINTENANCE 04-2

2. MUFFLER REMOVAL/INSTALLATION 04-3

3. FLEXIBLE TUBE INSTALLATION 04-3

LIST OF ILLUSTRATIONS

FIG. 1: EXHAUST SYSTEM 04-2

FIG. 2: FLEXIBLE TUBE INSTALLATION 04-3

1. MAINTENANCE

The exhaust system should be inspected periodically for restrictions and leaks. The exhaust system is shown in figure 1. Restrictions such as kinked or crimped pipes result in excessive back pressure which can lead to increased fuel consumption, power loss, and possible damage to engine combustion chamber components. Exhaust leaks are commonly the result of loose clamp bolts, corroded pipes, or a punctured muffler. In addition to excessive noise, a leaking exhaust system could allow toxic gases to enter the vehicle. Inspect the exhaust system as follows:

- At vehicle inspection intervals;
- Whenever a change is noticed in the sound of the exhaust system; and
- Whenever the exhaust system is damaged.

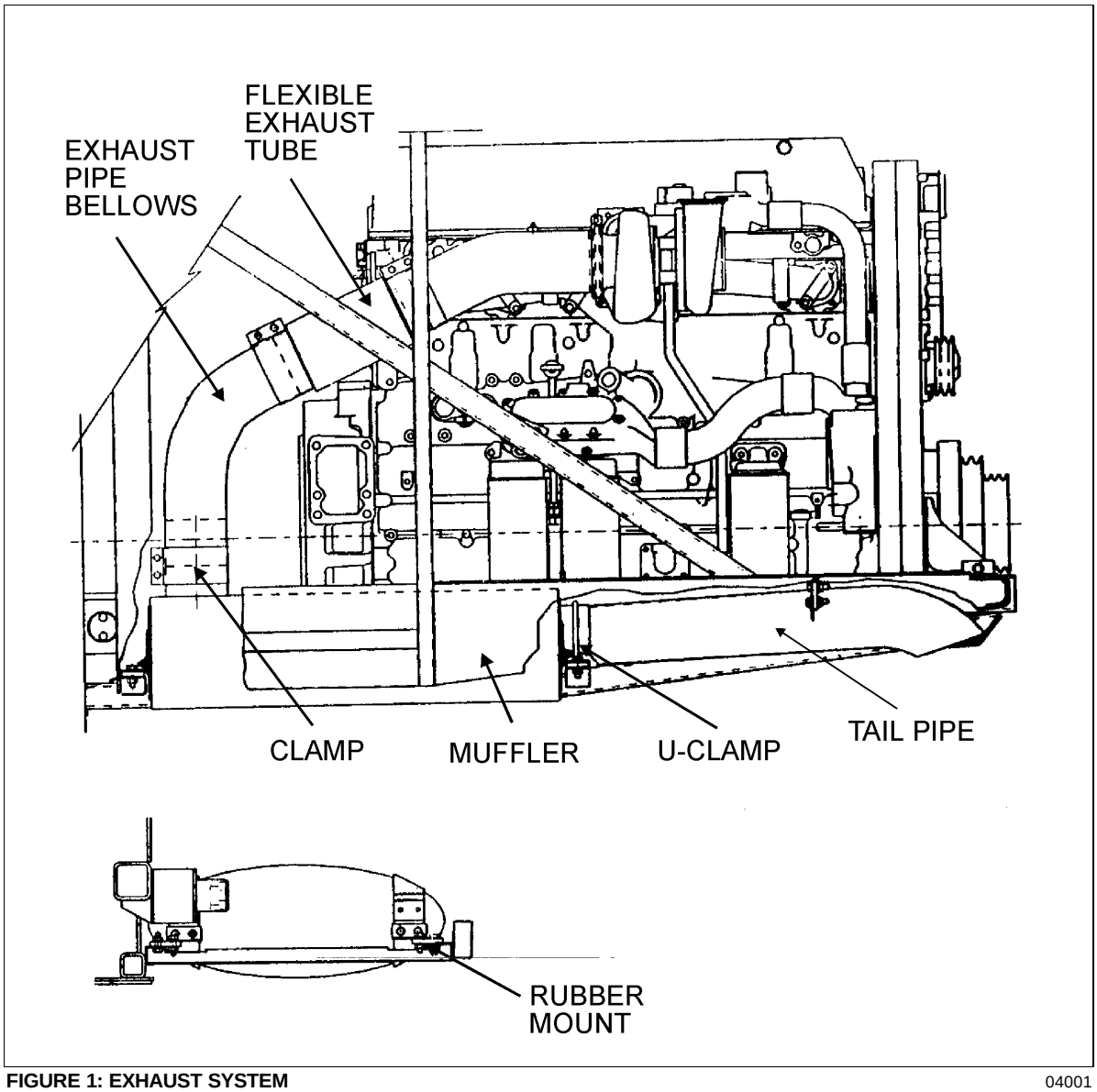

FIGURE 1: EXHAUST SYSTEM 04001

Replace damaged or corroded exhaust system components without delay.

When operating the engine in a service garage or in a closed area, the exhaust must be vented to the outside. Place the shop vent hose over the exhaust outlet pipe.

Warning: *Avoid breathing exhaust gases. Exhaust contains carbon monoxide which is odorless and colorless. Carbon monoxide is a dangerous gas which can cause unconsciousness and can be lethal. If at any time you suspect that exhaust fumes are entering the vehicle, locate and correct the cause(s) as soon as possible.*

2. MUFFLER REMOVAL/INSTALLATION

Warning*: Make sure the that muffler and components are cold before removing or installing components.*

1. Remove bolts and clamps securing exhaust pipe bellows to the muffler.
2. Support the muffler from under the vehicle.
3. Remove U-clamp which retains the tail pipe to the muffler.
4. Remove bolt holding the tail pipe to the frame bracket.
5. Remove the tail pipe.
6. Remove the fasteners holding the four rubber mounts to the frame brackets. Remove the fasteners securing the rubber mounts to the muffler brackets.

Note: *The front retaining bolts are accessible from the L.H. side tag axle wheel housing.*

7. Remove rubber mounts. Lower muffler from under vehicle.
8. Remove parts which are attached to the muffler such as brackets and collar. Inspect and replace pieces if necessary. Reinstall parts on the new muffler.
9. Installation is the reverse of removal.

3. FLEXIBLE TUBE INSTALLATION

The flexible exhaust tube contains an inside rigid pipe (Fig. 1). To allow appropriate flexibility for assembly, make sure that the rigid pipe is concentric to the flexible part. To maintain the pipe centered at the time of installation, cardboard spacers must be inserted at four places at equal distance around it (Fig. 2). These spacers may be left in place and will deteriorate over time.

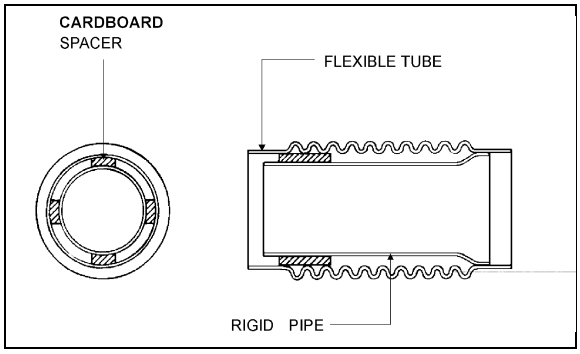

Figure 2: Flexible Tube Installation 04003

SECTION 05: COOLING SYSTEM

CONTENTS

1. COOLING SYSTEM 05-3
    1.1 Description 05-3
    1.2 Maintenance 05-4
2. HOSE 05-5
    2.1 Inspection 05-5
3. CONSTANT-TORQUE HOSE CLAMPS 05-6
    3.1 Description 05-6
    3.2 Installation 05-6
    3.3 Maintenance 05-6
4. COOLANT 05-6
    4.1 Thawing Cooling System 05-6
    4.2 Coolant Level Verification 05-6
    4.3 Cooling Level Sensor 05-7
    4.4 Coolant Requirements 05-7
    4.5 General Cooling System Recommendations 05-7
    4.6 Coolant Recommendations 05-7
    4.7 Draining Cooling System 05-8
    4.8 Refilling Cooling System 05-10
    4.9 Flushing 05-11
    4.10 Cooling System Cleaners 05-11
    4.11 Reverse Flushing 05-11
5. COOLANT FILTER (SPIN-ON TYPE) 05-12
    5.1 Description 05-12
6. RADIATOR 05-13
    6.1 Maintenance 05-13
7. RADIATOR VARIABLE SPEED FAN 05-13
    7.1 Description 05-13
    7.2 Maintenance 05-13
    7.3 Inspection 05-14
    7.4 Thermostat Operation 05-14
8. FAN GEARBOX 05-14
    8.1 Description 05-14
    8.2 Maintenance 05-14
    8.3 Oil Change 05-15
9. RADIATOR FAN BELT REPLACEMENT AND AIR BELLOW TENSIONER 05-15
10. FAN DRIVE ALIGNMENT 05-15
11. SPECIFICATIONS 05-18

LIST OF ILLUSTRATIONS

FIG. 1: COOLING SYSTEM....05-3
FIG. 2: COOLING SYSTEM SURGE TANK....05-4
FIG. 3: CONSTANT-TORQUE CLAMP....05-6
FIG. 4: COOLANT LEVEL VERIFICATION....05-6
FIG. 5: ENGINE COMPARTMENT....05-9
FIG. 6: REAR ELECTRIC COMPARTMENT....05-9
FIG. 7: RIGHT REAR CORNER OF ENGINE....05-9
FIG. 8: VIEW FROM UNDER THE VEHICLE....05-10
FIG 9: THERMOSTAT BLOCK DRAIN PLUG....05-10
FIG. 10: WATER PUMP DRAIN COCK....05-10
FIG. 11: ENGINE DRAIN COCK....05-10
FIG. 12: COOLANT FILTER LOCATION....05-12
FIG. 13: MECHANICAL LOCKING DEVICE....05-13
FIG. 14: THERMOSTAT AND RELATED PARTS....05-14
FIG. 15: FAN GEARBOX....05-15
FIG. 16: ENGINE COMPARTMENT....05-15
FIG. 17: ANGLE SUPPORT....05-16
FIG. 18: PULLEY ALIGNMENT....05-16
FIG. 19: MEASURING ENGINE PULLEY VERTICAL ANGLE....05-16
FIG. 20: UPPER TENSIONING BRACKET....05-17
FIG. 21: BELT TENSIONING PRESSURE CONTROL VALVE....05-17

1. COOLING SYSTEM

1.1 Description

A radiator and thermo-modulated fan are used to effectively dissipate the heat generated by the engine.
A centrifugal-type water pump is used to circulate the engine coolant (Fig.1).

Two full blocking-type thermostats are used in the water outlet passage to control the flow of coolant, providing fast engine warm-up and regulating coolant temperature.

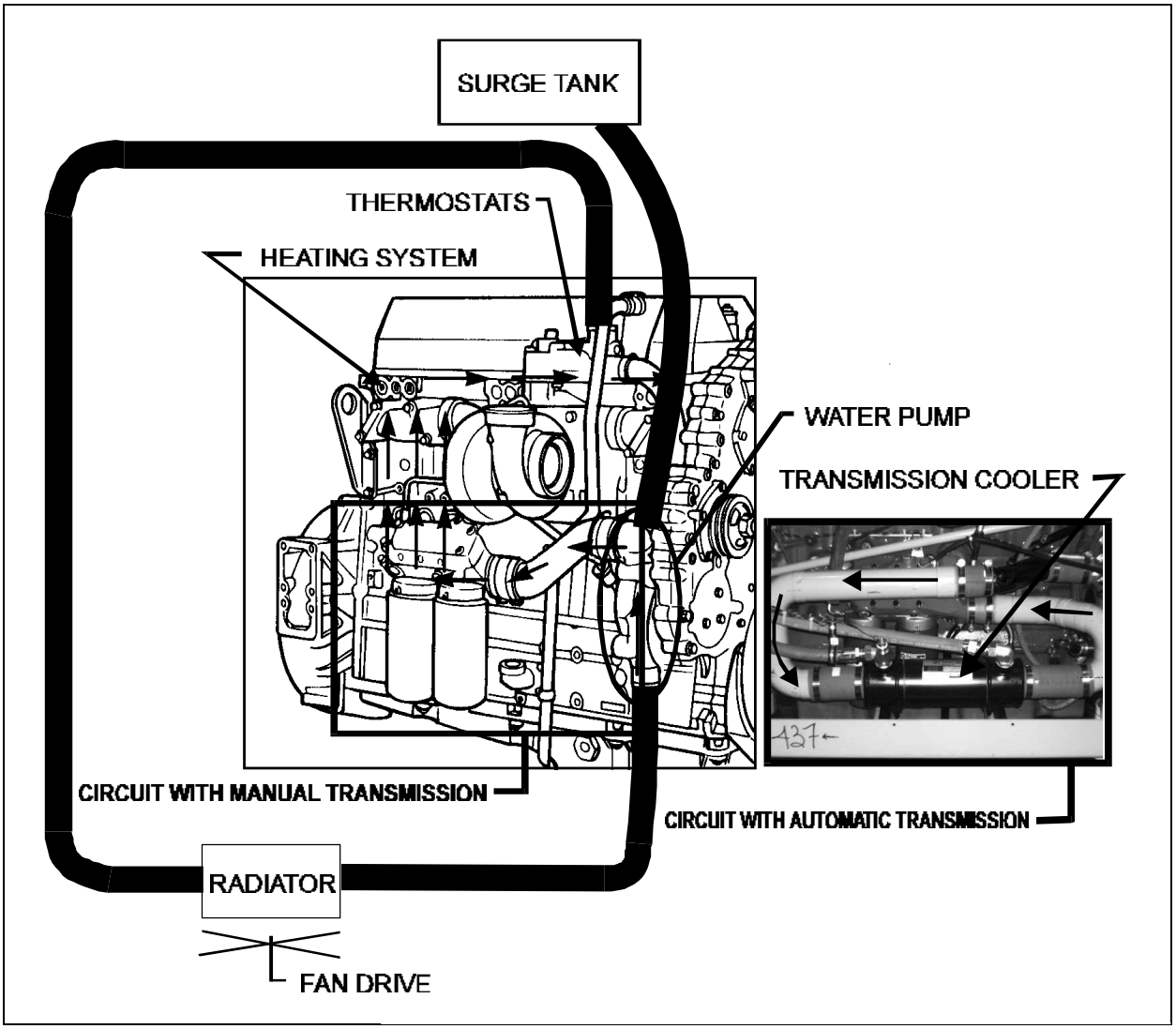

FIGURE 1: COOLING SYSTEM 05023

The engine coolant is drawn from the lower portion of the radiator by the water pump and is forced through the oil cooler and into the cylinder block. For vehicles with automatic transmissions the coolant circulates in the transmission cooler before going through the oil cooler and the cylinder block.

From the cylinder block, the coolant passes up through the cylinder head when the engine is at normal operating temperature, through the thermostat housing and into the upper portion of the radiator. Then the coolant passes through a series of tubes where the coolant temperature is lowered by air streams created by the revolving fan and the motion of the vehicle.

Upon starting a cold engine, or when the coolant is below operating temperature, the closed thermostats direct coolant flow from the thermostat housing through the by-pass tube to the water pump. Coolant is recirculated through the engine to aid engine warm-up. When the thermostat opening temperature is reached, coolant flow is divided between the radiator inlet and the by-pass tube. When the thermostats are completely open, all of the coolant flow is to the radiator inlet.

The cooling system is filled through a filler cap on the surge tank (Fig. 2). A pressure cap at right of surge tank is used to maintain pressure within the system. When the system exceeds normal pressure rating (14 psi - 96.53 kPa), the cap releases air and if necessary , coolant through the overflow tube. Two thermostats are located in the housings attached to the right side of the cylinder head.

A water temperature sensor mounted on the cylinder head (radiator side) is also supplied for engine protection purposes.

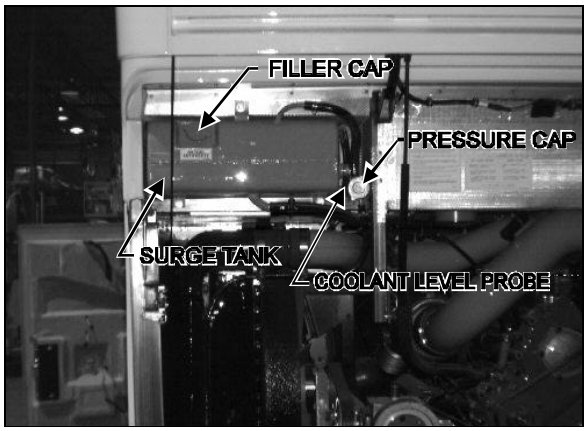

FIGURE 2: COOLING SYSTEM SURGE TANK 05024

The engine cooling system is also used to provide hot coolant for the vehicle heating system. Refer to Section 22, Heating and Air for information relating to heating system water circulation. Inspect cooling system as follows:

1.2 Maintenance

A systematic routine inspection of cooling system components is essential to ensure maximum engine and heating system efficiency.

- Check coolant level in the surge tank daily, and correct if required. Test antifreeze strength.

- Maintain the prescribed inhibitor strength levels as required. Coolant and inhibitor concentration must be checked at each oil change, every 12,500 miles (20 000 km) or once a year, whichever comes first to ensure inhibitor strength. For vehicles equipped with coolant filter, replace precharge element filter with a maintenance element filter. If the vehicle is not equipped with the filter, add the recommended inhibitor concentration to the antifreeze/water solution.

- Drain, flush, thoroughly cleaned and refill the system every two years or every 200,000 miles (320 000 km), whichever comes first. For vehicles equipped with coolant filter, change the precharge element filter or the existing maintenance element filter for a new maintenance element filter. If the vehicle is not equipped with the filter, add the recommended inhibitor concentration to the antifreeze/water solution.

Note: *Do not add inhibitors to the antifreeze/water solution when vehicle is equipped with a coolant filter.*

Note: *The coolant must be discarded in a environmentally safe manner.*

Vehicles without coolant filter.

Refer to Nalcool 3000 with Stabil-Aid bulletin annexed to the end of this section for preventive maintenance (at each oil change) and initial treatment instructions (each time the cooling system is drained, flushed and cleaned).

Vehicles with coolant filter.

Change the coolant precharge element filter for a maintenance element filter at each oil change (see specifications at the end of this section) and replace existing maintenance filter with a new one . Use a coolant precharge filter each time the cooling system is drained, flushed and cleaned.

- Check belts for proper tension. Adjust as necessary. Replace any frayed or badly worn belts.

- Check radiator cores for leaks. Make sure the cores are not clogged with dirt or insects. To avoid damaging the fins, clean cores with a low pressure air hose. Steam clean if required.

- Inspect the water pump operation. A leaky pump sucks in air, increasing corrosion.

- Repair all leaks promptly. Unchecked leaks can lead to trouble. Inspect and tighten radiator mounts periodically. Test and replace thermostats regularly.

Note: *In order to ensure the integrity of the system, periodically check cooling system pressure. Pressurize the cooling system to 103-138 kPa (15-20 psi) using Radiator and Cooling System Tester, J24460-1. Do not exceed 138 kPa (20 psi). Any measurable drop in pressure may indicate a leak. Whenever the oil pan is removed, check the cooling system pressure as a means of identifying any incipient coolant leaks. Make sure that the cause of the internal leak has been corrected before flushing the contaminated system.*

Leaks at the thermostat housing hose connections may be caused by deformation and rough surfaces on the castings of the hose mounting surfaces. It is recommended that *"Dow Corning RTV-102 Compound"* or any equivalent product be applied on cast surfaces prior to hose installation.

Caution*: Castings should be clean and free of oil and grease before applying compound. No other sealer should be used with RTV-102 compound.*

2. HOSES

2.1 Inspection

Rotten, swollen, and worn out hoses or loose connections are frequent causes of cooling system problems.

Serious overheating is often caused by an old hose collapsing or from rotten rubber shedding from hoses and clogging the coolant passages.

Connections should be inspected periodically and hose clamps tightened. Replace any hose found to be cracked or swollen.

When installing a new hose, clean pipe connections and apply a thin layer of a non-hardening sealing compound. Replace worn out clamps or clamps that pinch hoses.

3. CONSTANT-TORQUE HOSE CLAMPS

3.1 Description

All hose clamps of 1 3/8" I.D. and over, used on the heating and cooling systems, are of the *"constant-torque"* type. These clamps are worm-driven, made of stainless steel, and provided with a series of Belleville spring washers. They also feature an extended integral liner that covers the band slots to protect soft/silicone hoses from damage, and help maintain consistent sealing pressure.

This type of clamp is designed to automatically adjust its diameter to compensate for the normal expansion/contraction of a hose and metal connection that occurs during vehicle operation and shutdown. The constant-torque clamp virtually eliminates coolant losses due to *"cold flow"* leakage and greatly minimizes clamp maintenance.

3.2 Installation

Use torque wrench for proper installation. The recommended torque is 90 to 100 lbf•in. (10 to 11 N•m). The Belleville spring washer stacks should be nearly collapsed flat and the screw tip should extend 1/4" (6 mm) beyond the housing (Fig. 3).

Caution: The hose clamps will break if overtorqued. Do not overtighten, especially during cold weather when hose has contracted.

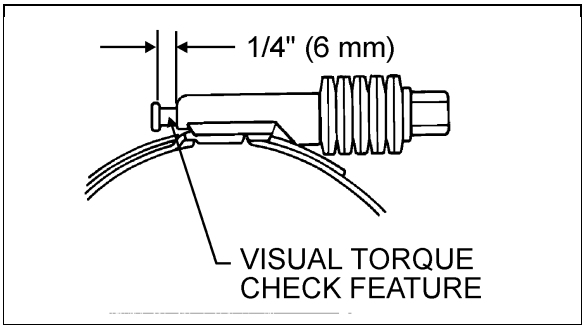

FIGURE 3: CONSTANT-TORQUE CLAMP MA3E0502

3.3 Maintenance

The constant-torque clamps contain a *"visual torque check"* feature. When the tip of the screw is extending 1/4" (6 mm) out of the housing, the clamp is properly installed and maintains a leak-proof connection (Fig. 3). Since the constant-torque clamp automatically adjusts to keep a consistent sealing pressure, there is no need to retorque hose clamps on a regular basis. During vehicle operation and shutdown, the screw tip will adjust according to the temperature and pressure changes. Proper torque installation should be checked at room temperature.

4. COOLANT

4.1 Thawing cooling System

If the cooling system becomes frozen solid, place the coach in a warm area until the ice is completely thawed. Under no circumstances should the engine be operated when the cooling system is frozen, since it will result in engine overheating due to insufficient coolant.

4.2 Coolant Level Verification

Coolant level is correct when the cold coolant is visible through the surge tank sight glass. If coolant level is low, fill cooling system (Fig. 4).

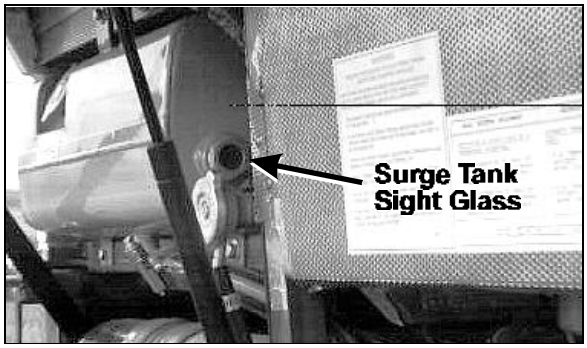

FIGURE 4: COOLANT LEVEL VERIFICATION OEH3B724

4.3 Cooling Level Sensor

The "loss of coolant warning device", consists of a level probe mounted on the surge tank and a sensor module mounted on the vehicle. The module sends a signal to the ECM to indicate coolant level. If the coolant level drops below the probe the Check Engine light flashed and diagnostic code is registered (see Section 1, Engine).

Caution: *Do not run engine with the Check Engine light flashing.*

The level probe is mounted on the R.H. side of the surge tank while the electronic module is mounted inside the rear electric junction box.

4.4 Coolant Requirements

The coolant provides a medium for heat transfer and controls the internal temperature of the engine during operation. In an engine having proper coolant flow, some of the combustion heat is conveyed through the cylinder walls and the cylinder head into the coolant. Without adequate coolant, normal heat transfer cannot take place within the engine and engine temperature rapidly rises. Therefore, coolant must be carefully selected and properly maintained.

Coolant solutions must be carefully selected and properly maintained in order to meet the following basic requirements:

1. Provide adequate heat transfer.
2. Provide protection from cavitation damage.
3. Provide a corrosion/erosion-resistant environment within the cooling system.
4. Prevent formation of scale or sludge deposits in the cooling system.
5. Be compatible with the cooling system hose and seal materials.
6. Provide adequate freeze protection during cold weather operation.

The first five requirements are satisfied by combining suitable water with reliable inhibitors. When freeze protection is required, a solution of suitable water and antifreeze containing adequate inhibitors will provide a satisfactory coolant. Ethylene glycol-based antifreeze is recommended for use in Series 60 engines. The cooling system capacity is 24 US gal (91 liters).

Note: *In general, antifreeze does not contain adequate inhibitors. For this reason, supplemental coolant additives are required.*

For a complete overview of engine coolants used with Detroit Diesel Engines, see in the current DDEC III Service Manual #6SE483, refer to Section "5. COOLANT".

4.5 General Cooling System Recommendations

Always maintain cooling system at the proper coolant level. Check coolant level daily.

The cooling system must be pressurized to prevent localized boiling of coolant. The system must be kept clean and leak-free. The filler cap and pressure cap must be checked periodically for proper operation.

4.6 Coolant Recommendations

1. Always use recommended antifreeze, inhibitor and water at proper concentration levels. A 50% coolant/water solution is normally used as factory fill. Concentrations over 70% is not recommended because of poor heat transfer capability, adverse freeze protection and silicate dropout. Concentrations below 30% offers little freeze, boilover or corrosion protection.
2. Use only ethylene glycol antifreeze meeting the GM 6038-M or ASTM D 4985 formulation, or an equivalent

antifreeze with a 0.15% maximum silicate content meeting GM 1899-M performance specifications.

3. Use an antifreeze solution year-round for freeze and boil-over protection. Seasonal changing of coolant from an antifreeze solution to an inhibitor/water solution is recommended.

4. Pre-mix coolant makeup solutions at proper concentrations before adding to the cooling system.

5. Maintain the prescribed inhibitor strength levels as required.

Vehicles Without Coolant Filter

Refer to Nalcool 3000 with Stabil-Aid bulletin annexed to the end of this section for preventive maintenance (at each oil change) and initial treatment instructions (each time the cooling system is drained, flushed and cleaned).

Vehicles With Coolant Filter

Change the coolant maintenance filter at each oil change (see specifications at the end of this section). Use a coolant precharge filter each time the cooling system is drained, flushed and cleaned.

Note: *The coolant filter contain inhibitors.*

6. Do not mix different base inhibitor packages.

7. Use only non-chromate inhibitors.

Caution: *DO NOT USE THE FOLLOWING:*

Soluble oil

Chromate inhibitor

Methoxy propanol-base antifreeze

Methyl alcohol-base antifreeze

Sealer additives or antifreezes containing sealer additives

8. Distilled water is recommended.

9. Always maintain proper coolant level.

Note: *Always test the solution before adding water or antifreeze.*

10. If not at the proper protection level, mix coolant/water solution to the proper concentration before adding to the cooling system.

Warning: *Never remove fill cap while coolant is hot. When coolant is at ambient temperature, release pressure from system by turning the pressure cap counterclockwise 1/4 turn; then remove filler cap slowly. A sudden release of pressure from a heated cooling system can result in severe burns from the expulsion of hot coolant.*

4.7 Draining Cooling System

The cooling system may be completely or partially drained by using the following procedures.

The engine and related components may be drained as follows:

1. Stop engine and allow engine fin to cool. Close both heater line shutoff valves. One located in the engine compartment under the radiator fan gearbox (Fig. 5). The other heater line shutoff valve is located in the L.H. rear electric compartment (near the preheater, see Fig. 6). Refer to Section 22, Preheating System, to gain access to the preheater and the heater line shutoff valve .

Warning: *Before proceeding with the following steps, make sure that coolant has cooled down. The sudden release of pressure from a heated cooling system can result in loss of coolant and severe burns (scalding) from the hot liquid.*

2. Remove the pressure cap. Removal of the pressure cap permits air to enter the cooling passages and the coolant to drain completely from system.

3. Open the drain cock located at the right rear corner of the engine (Fig. 7).

4. Open the water pump housing inlet line drain cock (Fig. 8).

5. Open the drain cock at the bottom of the thermostat housing to drain the coolant trapped above the thermostats (Fig. 9).

6. Open the water pump drain cock (Fig. 10, if applicable).

7. Open the radiator drain cock (Fig. 5).

8. Open engine drain cock (Fig. 11).

Note: *if freezing weather is anticipated and the engine is not protected by antifreeze, drain the cooling system completely when the engine is not use. Leave the drain plugs out until the cooling system is refilled. Trapped water in the cylinder block, radiator or other engine parts may freeze and expand resulting in damage to the engine.*

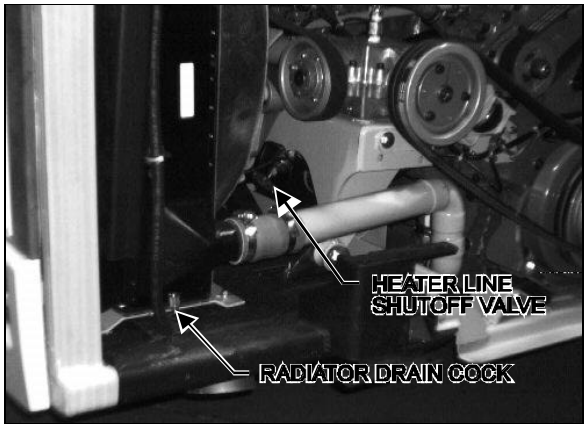

FIGURE 5: ENGINE COMPARTMENT 05025

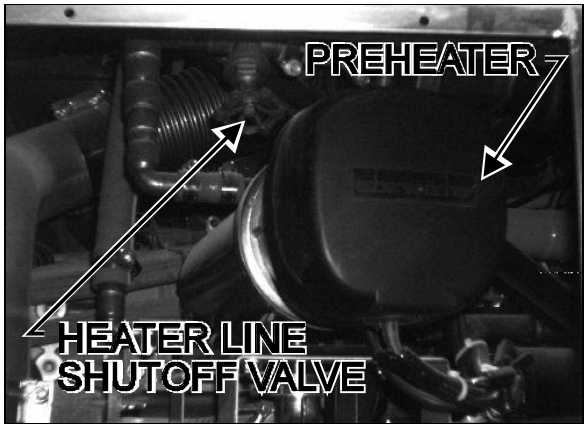

FIGURE 6: REAR ELECTRIC COMPARTMENT 05026

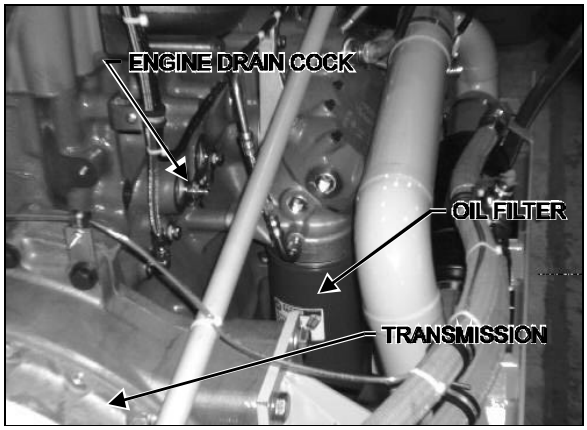

FIGURE 7: RIGHT REAR CORNER OF ENGINE 05027

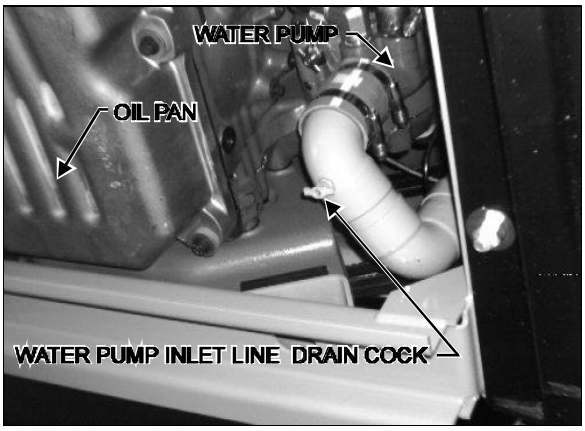

FIGURE 8: VIEW FROM UNDER THE VEHICLE 05028

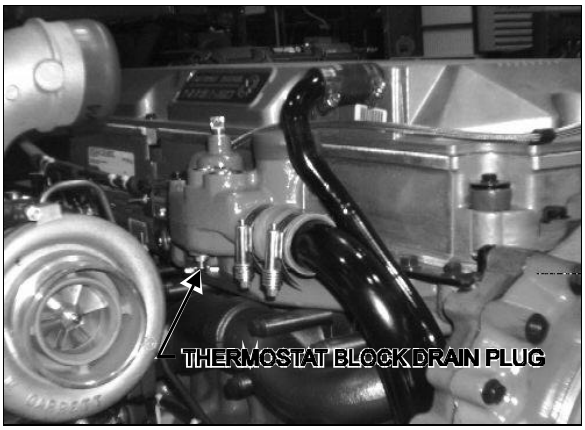

FIGURE 9: THERMOSTAT BLOCK DRAIN PLUG 05029

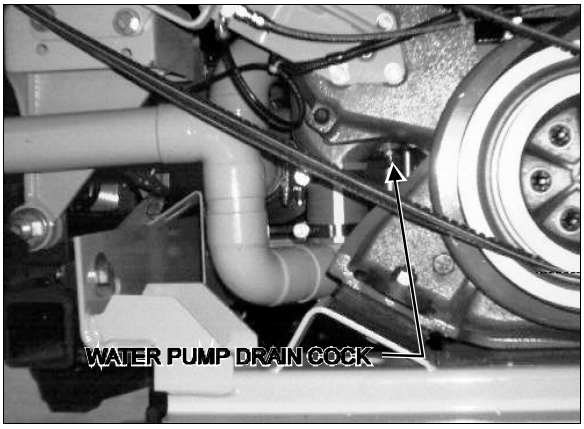

FIGURE 10: WATER PUMP DRAIN COCK 05030

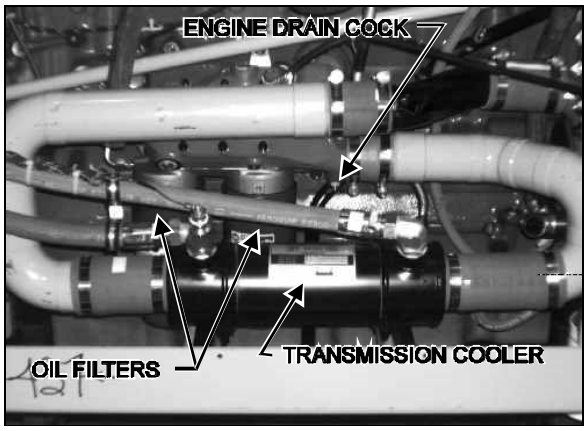

FIGURE 11: ENGINE DRAIN COCK 05031

To drain the entire system, repeat the previous steps while maintaining the shutoff valves in their open position. Follow the procedure under the heading "11.2 DRAINING HEATING SYSTEM" in Section 22, to simultaneously drain the heating units.

4.8 Refilling Cooling system

If only the engine and related components have been drained, place the two heater line shutoff valves in their closed position, then proceed as follows:

1. Close all drain cocks. Refer to the draining cooling system procedure for the location of draining points.

2. From the surge tank filler cap inlet, refill cooling system with a recommended ethylene glycol-base antifreeze and water solution with the required concentration. Add required Detroit Diesel selected product cooling system inhibitors.

Note: *The coolant level should remain within two inches of the surge tank filler neck.*

Note: *Make sure that the vent line from the top of the thermostat housing is properly connected and not obstructed. The vent line (thermostat housing dome to radiator top tank) is required to ensure complete engine fill and proper venting of air in the system.*

3. Install the filler and pressure caps. Start the engine and run it at fast idle until normal operating temperature is reached (check for leaks).

Note: *If for any reason, the coolant level drops below the surge tank level probe, the Check Engine light will flash.*

4. Stop engine and let cool.

Caution*: Never pour cold coolant into a hot engine. The sudden change in temperature may crack the cylinder heads or block.*

5. Open the two heater line shutoff valves. Check the coolant level in the surge tank. Add coolant as required.

If the entire system has been drained, repeat the previous steps while keeping the two heater line shutoff valves in the "Open" position. With engine running, activate the driver's and central heating systems to permit coolant circulation. Bleed the heater cores as explained in Section 22, under heading "11.4 BLEEDING HEATING SYSTEM".

4.9 Flushing

If the cooling system is contaminated, flush the cooling system as follows:

1. Drain the coolant from the engine.

2. Refill with soft clean water.

Note: *If the engine is hot, fill slowly to prevent rapid cooling and distortion of the engine castings.*

3. Start the engine and operate it for 15 minutes after the thermostats have opened to thoroughly circulate the water.

4. Drain the unit completely.

5. Refill with clean water and operate for 15 minutes after the thermostats have opened.

6. Drain the unit completely.

7. Fill with 50/50 antifreeze and water solution. Add required inhibitors. Change the coolant filter (if applicable) for a precharge filter. In this case, do not mix inhibitors with antifreeze/water solution.

4.10 Cooling System Cleaners

If the engine overheats, and the fan belt tension, water level, and thermostat operation have been found to be satisfactory, it may be necessary to clean and flush the entire cooling system.

Remove scale formation by using a reputable and safe descaling solvent. Immediately after using the descaling solvent, neutralize the system with the neutralizer. It is important that the directions printed on the container of the descaler be thoroughly read and followed.

After the solvent and neutralizer have been used, completely drain the engine and radiator and reverse flush before filling the system.

4.11 Reverse Flushing

After the engine and radiator have been thoroughly cleaned, reverse flush the system. The water pump should be removed and the radiator and engine reverse flushed separately to prevent dirt and scale deposits clogging the radiator tubes or being forced through the pump. Reverse flushing is accomplished by hot water, under pressure, being forced through the cooling system in a direction opposite to the normal flow of coolant, loosening and forcing deposits out.

Radiator Reverse Flushing

The radiator is reverse flushed as follows:

1. Remove the radiator inlet and outlet hoses. Replace the radiator cap.

2. Attach a hose to the top of the radiator to lead water away from the engine.

3. Attach a hose at the bottom of the radiator. Insert a flushing gun in the hose.

4. Connect the water hose of the gun to the water outlet and the air hose to the compressed air outlet.

5. Turn on the water. When the radiator is full, turn on the air in short blasts, allowing the radiator to fill between blasts.

6. Continue flushing until only clean water is expelled from the radiator.

Cylinder Head and Cylinder Reverse Flushing

The cylinder block and cylinder head water passages are reverse flushed as follows:

1. Remove the thermostats and the water pump.

2. Attach a hose to the water inlet of oil cooler housing to drain water away from engine.

3. Attach a hose to the water outlet at the top of the cylinder head (thermostat housing). Insert the flushing gun in the hose.

Caution: *Apply air gradually. Do not exert more than 138 kPa (20 psi) air pressure. Too great a pressure may rupture a radiator tube.*

4. Turn on the water. When the jackets are filled, turn on the air in short blasts, allowing the engine to fill with water between air blasts.

5. Continue flushing until the water from the engine runs clean.

If scale deposits in the radiator cannot be removed by chemical cleaners reverse flushing as outlined above, it may be necessary to remove the upper tank and clean out the individual radiator tubes with flat steel rods. Circulate the water through the radiator core from the bottom to the top during this operation.

5. Coolant Filter (Spin-on Type) (if applicable)

5.1 Description

The engine cooling system filter is used to: eliminate the adding of inhibitors in the antifreeze/water solution; and filter impurities such as scale or sand from the coolant. The filter is available as optional equipment. It is mounted to the engine cradle (close to the engine water pump, Fig. 12).

The precharge element filter lasts for 12,500 miles (20 000km) or a year, whichever comes first. Replace the precharge element filter with a maintenance element filter, which lasts for 200,000 miles (320 000 km) or every two years, whichever comes first. Every time the cooling system is flushed, drained and cleaned, you must first install a precharge element filter for its required lifespan; then install a maintenance element filter. Both filters must be changed at specified intervals.

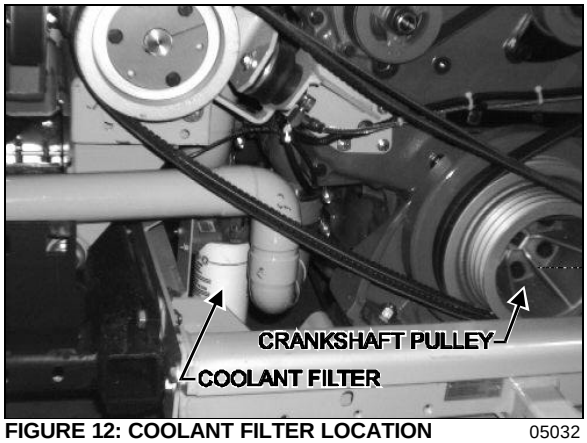

FIGURE 12: COOLANT FILTER LOCATION 05032

Note: *If a coolant system filter and conditioner is to be installed on an engine which has been in service, drain and flush the cooling system prior to installation of the filter.*

To replace a filter:

1. Close the two shutoff cocks at the filter mounting heads. Unscrew the old filters from under the vehicle.

2. Remove and discard the filter.

3. Clean the filter adapter with a clean, lint-free cloth.
4. Coat surface of gasket with oil. Tighten 2/3 to 1 turn after gasket contacts base.
5. Open the two shutoff cocks at filter.
6. Start engine and check for leaks.

Caution: *Do not exceed recommended service intervals.*

6. RADIATOR

The radiator is mounted at the L.H. side of engine compartment. The radiator is designed to reduce the temperature of the coolant under all operating conditions. It is essential that the radiator core be kept free from corrosion and scale at all times.

6.1 Maintenance

Inspect the exterior of the radiator core every 25,000 miles (40 000 km) or once a year, whichever comes first. Clean radiator with a quality grease solvent, such as a mineral spirits and dry with compressed air. Do not use fuel oil, kerosene or gasoline. It may be necessary to clean the radiator more frequently if the engine is being operated in extremely dusty or dirty areas.

7. RADIATOR VARIABLE SPEED FAN

7.1 Description

The two fan speeds are thermostatically controlled by ECM. The ECM compares input data from engine temperature, coolant temperature and air inlet temperature sensors to a set of calibration data. After comparing the input data with the calibrations data, the ECM sends electric current to the electromagnetic fan drive clutch.

An electric current regulates speeds by activating one magnetic coil for the first speed and two magnetic coils for the second speed.

The coolant temperature settings are:

- 196°F (91°C) First speed
- 203°F (95°C) Second speed

Also, for vehicle equipped with an automatic transmission and a retarder. The first speed is activate as soon as the retarder is in operation, then the second speed after a delay of approximately 7 seconds.

Caution: *<u>Mechanical locking device.</u> In case of an electrical power failure: unscrew the bolt from the end of the shaft and screw it into the locking plate. This procedure will prevent engine overheating (Fig. 13).*

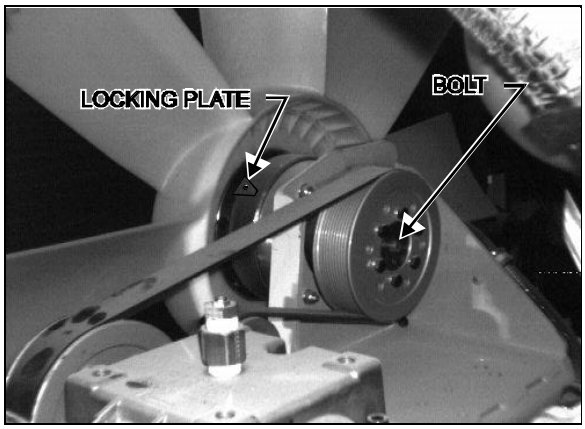

FIGURE 13: MECHANICAL LOCKING DEVICE 05033

7.2 Maintenance

1. Clean the fan and related parts with clean fuel oil. Dry with compressed air. Do not clean with steam or high pressure jet.
2. Check the fan blades for cracks or other damage. Replace the fan if the blades are cracked or deformed.
3. Remove any rust or rough spots in the grooves of the fan pulley. If the grooves are damaged or severely worn, replace the pulleys.
4. Do not add any fluids or lubricants to the fan drive.

5. Do not restrict fan rotation during engine operation for any reason.

6. Do not operate fan drive with a damaged fan assembly. Replace a damaged fan as soon as a fault is found.

7. Immediately investigate and correct any operator complaint involving drive or cooling system performance.

8. When questions arise, obtain answers before proceeding. Assistance is available through the authorized Field Sales distributor serving your area.

7.3 Inspection

Inspect as follows:

Warning: *Set the starter selector switch in the engine compartment to the "OFF" position to prevent accidental starting of the engine.*

- Check security of fasteners holding fan blade assembly to fan drive.
- Check coupling installation to gearbox.
- Visually inspect fan drive, fan blade assembly, shroud, radiator, and surrounding area for evidence of contact between rotating and non-rotating parts.
- Check fan transfer belt for fraying, cracking, and proper tension.
- Turn fan through at least 360° of rotation. It should turn smoothly, and be free of resistance.

7.4 Thermostat Operation

The temperature of the engine coolant is controlled by two blocking-type thermostats located in a housing attached to the right side of the cylinder head (Fig. 14).

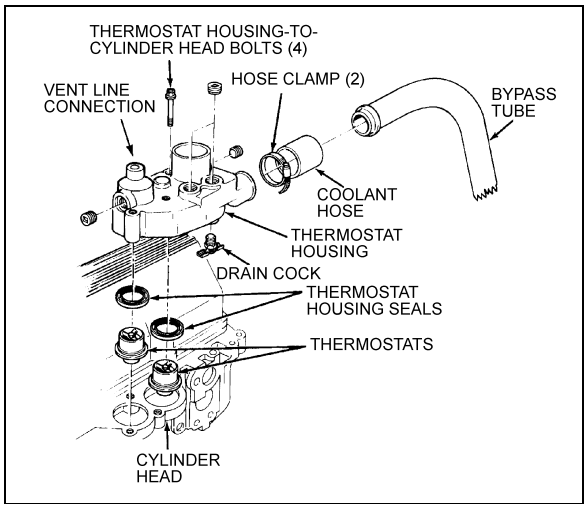

FIGURE 14: THERMOSTAT AND RELATED PARTS 05034

At coolant temperature below approximately 190°F (88°C), the thermostat valves remain closed and block the flow of coolant from the engine to the radiator. During this period, all of the coolant in the system is recirculated through the engine and directed back to suction side of the water pump via a bypass tube. As the coolant temperature rises above 190°F (88°C) the thermostat valves start to open, restricting the bypass system, and allowing a portion of the coolant to circulate through the radiator. When the coolant temperature reaches approximately 205-207°F (96-97°C) thermostat valves are fully open, the bypass system is blocked off, and the coolant is directed through the radiator.

8. FAN GEARBOX

8.1 Description

The radiator fan is belt driven from the engine crankshaft pulley through a gearbox standard assembly which is provided with two output shafts.

8.2 Maintenance

Break-in the gearbox oil at 3 000 miles (4 800 km) and subsequently every 50,000 miles (80 000 km) or once a year, whichever comes first.

8.3 Oil Change

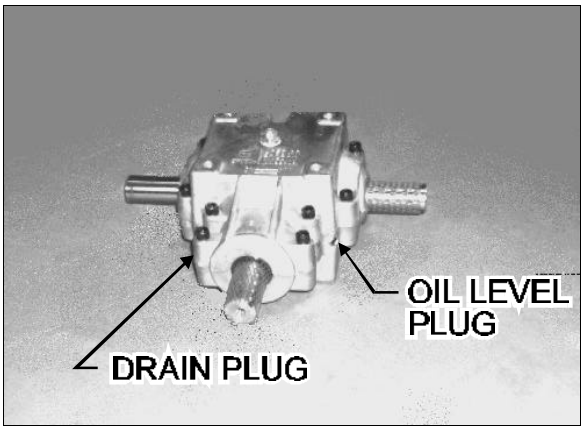

FIGURE 15: FAN GEARBOX 05008

1. Stop engine and make sure that all engine safety precautions have been observed.
2. Unscrew the air vent tube to permit the air to enter (Fig. 15).
3. Remove the drain plug located at the gearbox base.
4. Drain the gearbox.
5. Replace the drain plug.
6. Remove the level plug located on the middle side of the gearbox, near the air bellow tensioner.
7. Fill the gearbox with synthetic oil (Esso imperial mobil SHC 634, Prévost #682268) until the oil runs out of the plug.
8. Install plugs on the side of the gearbox and the air vent tube.

9. RADIATOR FAN BELT REPLACEMENT AND AIR BELLOWS BELT TENSIONER

Locate the belt tensioner control valve (Fig. 16). To release belt tension, turn handle counterclockwise in order to reverse pressure in belt tensioner air bellows.

1. Remove old belts (3 V belts and 1 Poly) from fan assembly. Install new belt.
2. Turn the two-way control valve clockwise, to its initial position, to apply tension on the new belt.
3. For proper operation of the belt, adjust the air bellow tensioner pressure regulating valve to 50 psi (345 kPa).

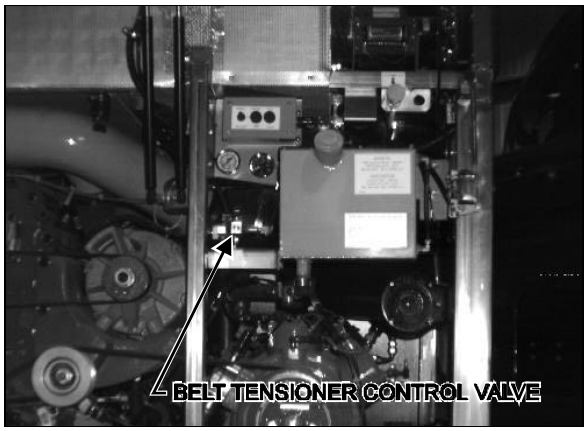

FIGURE 16: ENGINE COMPARTMENT 05035

10. FAN DRIVE ALIGNMENT

1. Install both attachment assembly plates (48, Fig. 17) through lower plating. Secure with four spring nuts (70, Fig. 17). Install one spacer (49, Fig. 17) on spring nuts at both anchoring locations.
2. Center seat assembly in the fan shroud using the horizontal displacement of the fan drive installation. Center with the slots in the floor at anchoring angle support (on some vehicles only). The vertical displacement of the fan clutch is made possible by slots at the base of the fan clutch (on some vehicles only) or by shimming with additional spacers at anchoring locations. Temporarily secure assembly with two temp. nuts (74, Fig. 17), 7/16-20, Prévost # 500709 at both anchoring locations.

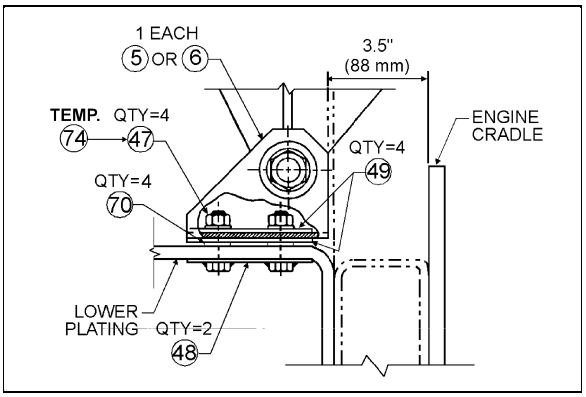

FIGURE 17: ANGLE SUPPORT 05014

Caution: *Tilt fan and check for clearance.*

3. Using a straight edge, align the 3"V" pulley on gearbox central shaft pulley with engine pulley, while taking pulleys outer edge thickness under consideration. That is, the 3 "V" pulley's outer edge is thicker than the engine pulley's outer edge (Fig. 18).

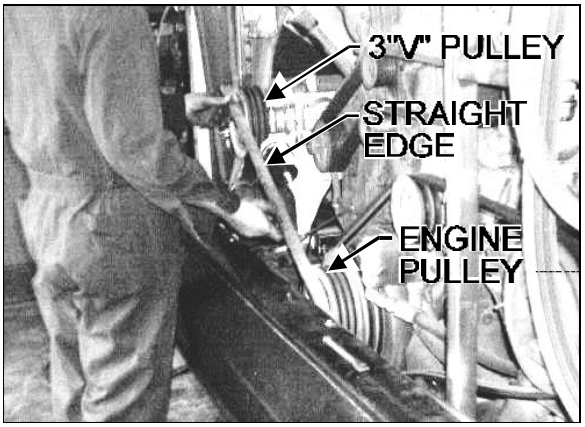

FIGURE 18: PULLEY ALIGNMENT 05015

4. Using a universal protractor, check 3 "V" pulley's vertical angle with that of engine pulley's. If angles do not correspond, raise seat assembly by shimming with additional spacers (49, Fig. 17).

Note: *Use a straight edge to measure engine pulley's vertical angle. (Fig. 19)*

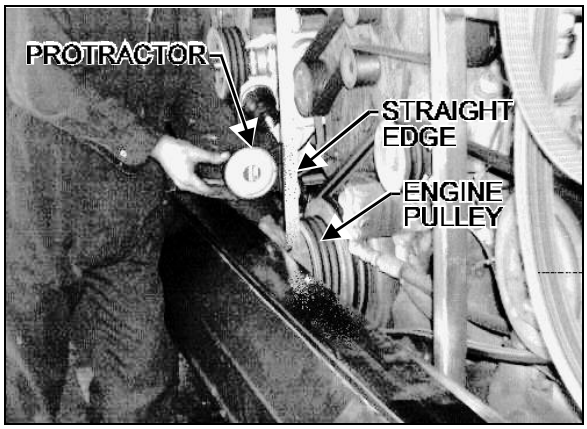

05016

FIGURE 19: MEASURING ENGINE PULLEY VERTICAL ANGLE

5. Recheck alignment (steps 3, 4 and 5). Replace temporary anchoring nuts (74, Fig. 17) with four nuts (47, Fig. 17), Prévost # 500714. Tighten with wrench.

6. Align Multi"V" Pulley with Fan Pulley. Adjust the depth of the pulley on the gearbox shaft.

Caution*: In order for tensioning system to work properly, the distance between the inside faces of "tensioning arm to engine" bellow brackets should be between 2 3/8" (60 mm) and 2 1/2" (64 mm); if not, release tension on system and readjust distance using bolts securing upper tensioning bracket (Fig. 20).*

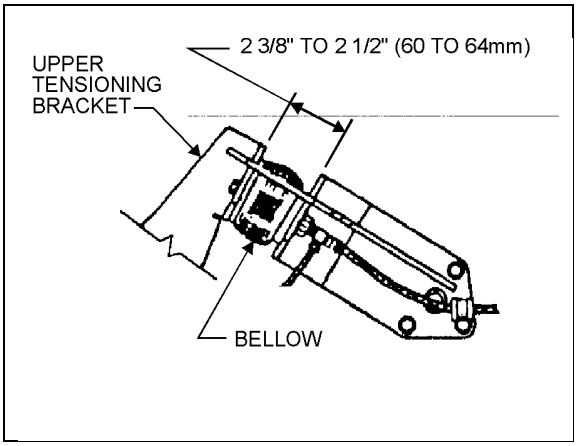

FIGURE 20: UPPER TENSIONING BRACKET 12017

7. Reset belt tensioning pressure control valve to 50 psi (345 kPa) for vehicles with series 60 engine in accordance with Section 12, Brake (Fig. 21).

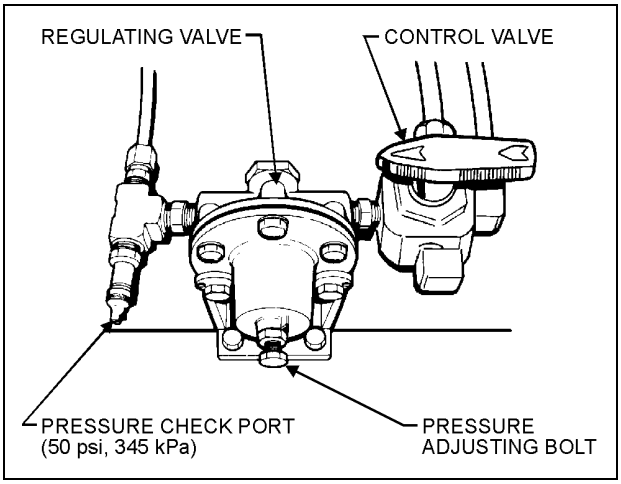

12018

FIGURE 21: BELT TENSIONING PRESSURE CONTROL VALVE

11. SPECIFICATIONS

Cooling System Capacity (Approx.)
Includes heating system ..... 24 US gal (91 liters)

Thermostat
Number used 2
Start to open ..... (186-193 °F) 86-89 °C
Fully open ..... 207 °F (97 °C)

Radiator
Make ..... Long
Location ..... Rear L.H. side
H3-41" & H3-45" Coaches
Supplier number 7601-8317-1
Prevost number 550687
H3-45 VIP
Supplier number 7601-8336
Prevost number 550689

Surge Tank Filler Cap
Make ..... Stant
Model R3
Prevost number 530191

Pressure Cap
Make ..... Stant
Pressure setting ..... 14 psi (96.53 kPa)
Supplier number R12
Prevost number 550606

Fan Clutch
Make ..... Linnig
Type ..... 3 speeds
Supplier number LA1.2.024Y
Prevost number 550634
Note: ***The fan clutch is controlled by ECM (not by thermoswitch).***

Fan Gearbox
Make ..... Superior Gearbox
Ratio 1:1
Supplier number 411ACF-097-6
Prevost number 550688

Fan Belt (gearbox-fan)

Make ..... Dayco
Type ..... Poly
Qty 1
All H3'S
Supplier number 5100495
Prevost number 506663

Fan Belt (gearbox-motor)

Make ..... Dayco
Type ..... V belt
Qty 3
H3-45 Coaches & VIP
Supplier number AX73
Prevost number 50-6691
H3-41 Coaches
Supplier number AX74
Prevost number 506690

Corrosion Inhibitor and Coolant Stabilizer

Supplier number ..... Detroit D. 23507857
Supplier number ..... Nalco DD3000-15

Coolant Filter

Number used 1
Make ..... Nalco
Type ..... Spin-on
MAINTENANCE ELEMENT FILTER
Supplier number. .... Detroit Diesel 23507545
Supplier number ..... Nalco DDF3000
Prevost number 550630
PRECHARGE ELEMENT FILTER
Supplier number. .... Detroit Diesel 23507189
Supplier number ..... Nalco DDF60
Prevost number 550629

Temperature Gage (in engine compartment)

Make ..... VDO Yazaki
Operating range ..... 100-265 °F (40-130 °C)
Supplier number 1 131 015 015B
Prevost number 562331

Temperature Gage (on instrument panel)

Make ..... Datcon
Type ..... Electrical
Operating range ..... 100-280 °F (38-138 °C)
Supplier number 07718-40
Prevost number 562214

NALCO

Dosage - Cont'd

hours unless there is an unusual water Iosa. For systems larger than 76 L capacity, add 0.473 L for ovary 76 L at each sertvice interval. When NALCOOL 3000 with STABIL-AID is used at each maintenance interval, both corrosion protection and coolant stability are maintained in your engine system.

Handing

Handle like any alkali. Avoid contact with eyes. Avoid prolonged or repeated contact with skin. Do not take internally. May cause eye or skin irritation. May be harmful or fatal is swallowed. Product my be stored up to one year. NALCOOL 3000 with STABIL-AID becomes "mushy" at -9°C (15°F), but is satisfactory for use after complete thawing.

shipping

NALCOOL 3000 with STABILL-AID is supplied in cases containing twelve 0.473-L (16 fluid oz.) bottles, in 23-L pails, 115-L and 210 L non returnable drums.

Instructions for Use

Protect your coding system against deposit formation caused by unstable engine coolant. In addition, protect your cooling system against corrosion, cavitation-erosion, mineral scale deposits and electrolysis. Use NALCOOL 3000 with STABIL-AID for total cooling system protection.

1. **Before Treatment** — The ingredient STABIL-AID will not dissolve gel once it has formed. For proper use, drain coolant and clean with NALCO NALPREP 2001 Cooling System Cleaner (add 1.89 L of NALPREP 2001 for each 30 L of cooling system capacity). Run your engine for a minimum of two hours eith the NALPREP/water mixture. Allow engine to cool and flush with fresh water. NOTE: If gel has already dried or your radiator is completely blocked, we recommend ultrasonic cleaning.

2. **Initial NALCOOL 3000with STABIL-AID Treatment** - See chart below for the number of tlitres of NALCOOL 3000 with STABIL-AID required to bring the coolin system up to full protection at initial fill.

Cooling System Capacity

4 - 15 L (1-4 USG)	Add 0.473 L (1 pint)
19 - 30 L (5-8 USG)	0.946 L (2 pints)
34 - 45 L (9-12 USG)	1.419 L (3 pints)
49 - 61 L (13-16 USG)	1.892 L (4 pints)
64 - 76 L (17-20 USG)	2.365 L (5 pints)
79 - 91 L (21-24 USG)	2.838 L (6 pints)
95 - 106 L (25-28 USG)	3.311 L (7 pints)
Over 106 (over 28 USG)	0.473 L (1 pints) per 15 L

When freeze protection is desired, use only ethylene glycol based antifreeze.

3 . Preventive Maintenance with NALCOOL 3000 with STABIL-AID

A . Line-Haut (High Mieagel Trucks - At every routine "B" service (typically 16,000 to 19.000 km)

System Capacity 76 L or less - Add 0.473 L

System Capacity over 76 L - Add 0.473 L for every 76 L or fraction thereof (e.g. 114 L- add 0.946 L)

B. **P&D (Low Mileage) Trucks, Stationary and Marine Units - At every 250 operating hours.**

System Capacity 76 L of less - Add 0.473 L

System Capacity over 76 L - Add 0.473 for every 76 L or fraction thereof (e.g. 114 L - add 0.946 L)

Quality

Nalco Canada certifies that all received batches of NALCOOL 3000 meet or exceed all in-process and finished product quality standards set for this product.

Remarks

For **Transportation Emergencies** involving Nalco products call: 1-800-463-3216.

For **Medical Emergencies** involving Nalco products call 416-632-8791 (24-hr. response).

Transportation Chemicals **Product Bulletin**

NALCOOL 3000® with STABIL-AID

COOLING SYSTEM CORROSION INHIBITOR AND COOLANT STABILIZER

Product Benefits

- Stabilizes engine coolants helping prevent the formation of abrasive gel-like deposits that can form from overconcentrations of:
  - coolant additives
  - hard wster salts
  - corrosion products
  - antifreeze products (particularty high silicate antifreeze formulations)
- Helps condition cooling system water by neutralizing hard water salts, preventing them from forming scale deposits on heat transfer surfaces
- Helps protect all metals in engine cooling systems from corrosive Helps protect against liner pitting and cavitation-erosion
- Lubricates water pump
- Helps keep engines free from heat-absorbing sludge and minerai scale deposits — prevents overheating
- Helps extend antifreeze life
- Comes in liquid form for simple supplication —add directly to the engine radiator or coding system
- Does not affect gaskets and hoses

Principal Uses

NALCOOL 3000 with STABIL-AID is a new advanced cooling system treatment formulation that helps prevent gel-like deposits from feting in cooling system passages. Hard water salts can combine with coolant additives, corrosion products and antifreeze to form gel-like deposits that can plug cooling system passages solid. Further, this abrasive gel can cause excessive wear damage to water pump seals and other coding system components. NALCOOL 3000 with STABiL-AID helps block the chemical formation of this coding system gel. It allows the safe use of current antifreeze formulations and coolant additive products in hard water without the occurrence of gelation problems. In addition, this new formulation helps prevent hard water salts from forming scale deposits on heat transfer surfaces. NALCOOL 3000 with STABIL-AID also helps provide superior film forming corrosion protection for all metals found in engine cooling systems. It helps keep angina coding systems clean and free from corrosive attack and the harmful effecte of mineral scale deposits. This allows for maintained design hoot transfer efficiencies and long engine life.

General Description

NALCOOL 3000 with STABIL-AID has the following typical characteristics:

Colour	red
Odour	none
Re;ative density at (15"CI	1.14
pH(± 0.1)	11.6
Solubility in water	soluble in all porportions

Dosage

Initial Treatment - New Engines: To assure a clean system, free from both corrosion and scale deposits, add 0.473 L of NALCOOL 3000 with STABIL-AID to the radiator for ovary 15 L of angina cooling system capacity.

Note: Engines Already in Service: It is recommended that engines be cleaned with NALPREP 2001 Engine Cooling System Cleaner to remove existing gel deposits before starting a NALCOOL 3000 with STABIL-AID program.

Maintenance Dosage: All Engines: A maka-up dosage of 0.473 L of NALCOOL 3000 with STABIL-AID should be added at every routine "B" service interval (oil change), typically every 16,000 to 19,000 km or 250

Continued on reverse

NALCO CANADA INC.

1055 TRUMAN STREET ❑ P.O. BOX 5002 BURLINGTON, ONTARIO L7R 3Y9

Registered Trademark of Nelco Chemical Company All Rights Reserved Printed in Canada

SECTION 6: ELECTRICAL SYSTEM

CONTENTS

1. GENERAL DESCRIPTION 06-7
2. WIRING AND MISCELLANEOUS ELECTRICAL 06-7
   - 2.1 Wiring Diagrams 06-7
     - 2.1.1 Wiring Diagram Symbols 06-7
     - 2.1.2 Using Wiring Diagrams 06-7
     - 2.1.3 Testing Circuits 06-7
   - 2.2 Wires and Connectors 06-8
     - 2.2.1 Wire Sizes and Colors 06-8
     - 2.2.2 Spare Wires 06-8
     - 2.2.3 Cleaning Connectors with a HFC 134A Based Solvent 06-8
   - 2.3 Circuit Breakers 06-8
   - 2.4 Relays 06-9
3. ELECTRICAL COMPARTMENTS AND JUNCTION BOXES 06-10
   - 3.1 Maintenance 06-10
   - 3.2 Main Electrical Compartment 06-11
   - 3.3 Rear Electrical Compartment and Junction Box 06-11
   - 3.4 Front Electrical Compartment and Junction Box 06-12
   - 3.5 Alarm Junction Box 06-12
   - 3.6 Engine Starting Control Box 06-13
   - 3.7 A/C and Heating Junction Box 06-13
4. BATTERIES 06-14
   - 4.1 General Description 06-14
   - 4.2 Main Battery Relays 06-14
   - 4.3 Battery Removal and Installation 06-14
   - 4.4 Battery Rating 06-15
   - 4.5 Battery Testing 06-15
     - 4.5.1 Visual Inspection 06-16
     - 4.5.2 Removing Surface Charge 06-16
     - 4.5.3 Load Test 06-16
     - 4.5.4 Testing Battery Cables 06-17
   - 4.6 Battery Charging 06-17
     - 4.6.1 Charging Procedure 06-17
     - 4.6.2 Battery Charging Guide 06-18
     - 4.6.3 Emergency Jump Starting With Auxiliary (Booster) Battery 06-19
   - 4.7 Cleaning and Inspection 06-19
   - 4.8 Common Causes of Battery Failure 06-20
   - 4.9 Troubleshooting 06-20

5. ELECTRICAL SYSTEM MONITOR 06-20
5.1 Warning Lamp Definitions 06-20
5.1.1 Battery Hi/Lo 06-20
5.1.2 Battery Balance 06-21
5.1.3 "Battery" Warning Light 06-21
6. ALTERNATOR 06-21
6.1 Diagnosis of Charging System Problems 06-22
6.1.1 Alternator or Voltage Regulator 06-23
6.2 Alternator Diagnosis 06-23
6.2.1 Diode Check 06-23
6.2.2 Field Winding Check 06-25
6.2.3 Stator Winding Check 06-25
6.3 Diode Replacement 06-26
6.3.1 Diode Replacement (in support) 06-26
6.3.2 Diode Replacement (in end frame) 06-26
6.4 Field Replacement 06-26
6.4.1 Removal 06-26
6.4.2 Installation 06-26
6.5 Stator Replacement 06-27
6.5.1 Removal 06-27
6.5.2 Soldering Stator Terminal Leads 06-27
6.5.3 Installation 06-27
6.6 Diode End Cover Installation 06-27
6.7 Alternator Replacement 06-28
6.7.1 Removal 06-28
6.7.2 Disassembly of Alternator 06-28
6.7.3 Alternator Cleaning and Inspection 06-29
6.7.4 Bearing or Rotor Replacement 06-29
6.7.5 Reassembly 06-30
6.7.6 Output Check 06-30
6.8 Alternator Drive Belt 06-30
6.8.1 Removal and Installation 06-30
6.8.2 Adjustment 06-30
7. VOLTAGE REGULATOR 06-31
7.1 Description 06-31
7.2 Troubleshooting Procedures 06-31
7.3 Checking Regulator Voltage Setting 06-32
7.3.1 Undercharged Battery 06-32
7.3.2 Overcharged Battery 06-33
7.4 Regulator Checks 06-33
7.5 Adjusting Voltage 06-34
8. BATTERY EQUALIZER 06-34

9. STARTING MOTOR 06-34
9.1 Description 06-34
9.2 Maintenance 06-36
9.3 Troubleshooting 06-36
9.3.1 No-Load Test 06-36
9.3.2 Lock-Torque Test 06-38
9.4 Disassembly and Reassembly 06-38
9.4.1 Disassembly 06-38
9.4.2 Cleaning 06-38
9.4.3 Armature Servicing 06-38
9.4.4 Field Coil Checks 06-39
9.4.5 Field Coil Removal 06-39
9.4.6 Reassembly 06-39
9.5 Pinion Clearance 06-39
9.6 Starter Solenoid 06-40
9.6.1 Description 06-40
9.6.2 Disassembly 06-40
9.6.3 Solenoid Maintenance 06-40
9.6.4 Solenoid Tests 06-40
9.6.5 Recommendations 06-40
10. ENGINE BLOCK HEATER 06-41
10.1 Maintenance 06-41
11. EXTERIOR LIGHTING EQUIPMENT 06-41
11.1 Headlights 06-41
11.1.1 Headlights Dimmer Switch 06-41
11.1.2 Maintenance 06-41
11.1.3 Headlight Adjustment 06-41
11.2 Sealed-Beam Unit Replacement 06-43
11.2.1 Removal 06-43
11.2.2 Replacement 06-44
11.3 Front Turn Signal 06-44
11.3.1 Bulb Removal and Replacement 06-44
11.4 Stop, Tail, Directional, Back-up, and Hazard Warning Lights 06-44
11.4.1 Bulb Removal and Replacement 06-44
11.5 License Plate Light 06-44
11.6 Clearance, Identification and Marker Lights 06-44
11.6.1 Marker Light Bulb Removal and Replacement 06-45
11.6.2 Clearance and Identification Light Bulb Removal and Replacement 06-45
11.7 Docking and Cornering Lights 06-45
11.7.1 Bulb Removal and Replacement 06-45
11.8 Fog Lights 06-45
11.8.1 Bulb Removal and Replacement 06-45
12. INTERIOR LIGHTING EQUIPMENT 06-46
12.1 Control Panel Lighting 06-46
12.1.1 Switch Bulb Replacement 06-46
12.1.2 Indicator Light Bulb Replacement 06-46
12.1.3 Gauge Light Bulb Replacement 06-46

12.1.4 Panel Light Bulb Replacement 06-47
12.2 Stepwell Lights and Lavatory Light Night 06-47
12.2.1 Bulb Removal and Replacement 06-47
12.3 Dome Lights 06-47
12.3.1 Bulb Removal and Replacement 06-47
12.4 Passenger Section Lighting 06-47
12.4.1 Removal and Replacement of Aisle Fluorescent Light 06-48
12.4.2 Removal and Replacement of Fluorescent Light 06-48
12.4.3 Removal and Replacement of Reading Lamp Bulb 06-48
12.5 Engine Compartment Lighting 06-48
12.5.1 Circular Light 06-48
12.5.2 Sealed Unit Light 06-49
12.6 Lavatory Light 06-49
13. LIGHT BULB DATA 06-50
14. TACHOGRAPH PROGRAMMING INSTRUCTIONS 06-52
15. SPECIFICATIONS 06-53

LIST OF ILLUSTRATIONS

FIGURE 1: WIRE IDENTIFICATION 06-8
FIGURE 2: BREAKERS 06-8
FIGURE 3: TYPES OF RELAYS 06-9
FIGURE 4: ELECTRICAL COMPARTMENT 06-10
FIGURE 5: MAIN ELECTRICAL COMPARTMENT 06-11
FIGURE 6: MAIN ELECTRICAL COMPARTMENT 06-11
FIGURE 7: REAR ELECTRICAL COMPARTMENT 06-11
FIGURE 8: REAR ELECTRICAL COMPARTMENT 06-11
FIGURE 9: FRONT ELECTRICAL COMPARTMENT - LEFT SECTION 06-12
FIGURE 10: FRONT ELECTRICAL COMPARTMENT - ON JUNCTION BOX 06-12
FIGURE 11: FRONT ELECTRICAL COMPARTMENT - IN FRONT JUNCTION BOX 06-12
FIGURE 12: ON ALARM JUNCTION BOX 06-12
FIGURE 13: IN ALARM JUNCTION BOX 06-13
FIGURE 14: A/C AND HEATING JUNCTION BOX 06-13
FIGURE 15: SLIDING DRAWER 06-13
FIGURE 16: BATTERIES 06-14
FIGURE 17: TEST INDICATOR 06-15
FIGURE 18: LOAD TEST 06-16
FIGURE 19: ALLIGATOR CLAMP AND BATTERY 06-18
FIGURE 20: OIL CIRCULATION THROUGH ALTERNATOR 06-21
FIGURE 21: ALTERNATOR WIRING DIAGRAM 06-22
FIGURE 22: CONNECTIONS FOR CHECKING ALTERNATOR OUTPUT 06-23
FIGURE 23: VIEW OF RECTIFIER END FRAME WITH COVER REMOVED 06-24
FIGURE 24: CHECKING DIODES WITH OHMMETER ON A TYPICAL OIL COOLED ALTERNATOR (END COVER REMOVED) 06-24
FIGURE 25: CHECKING DIODES WITH OHMMETER ON A TYPICAL OIL COOLED ALTERNATOR (END COVER REMOVED) 06-25
FIGURE 26: CHECKING STATOR WINDING FOR "OPEN" AND GROUND 06-25
FIGURE 27: ALTERNATOR (HOSES AND WIRES) 06-28
FIGURE 28: ALTERNATOR RETAINING BOLTS AND WASHERS 06-28
FIGURE 29: ALTERNATOR DRIVE BELT 06-30
FIGURE 30: VOLTAGE REGULATOR 06-31
FIGURE 31: TYPICAL WIRING DIAGRAM OF A NEGATIVE GROUND SYSTEM 06-31
FIGURE 32: REGULATOR VOLTAGE TEST 06-32
FIGURE 33: ADJUSTING REGULATOR VOLTAGE SETTING 06-32
FIGURE 34: REGULATOR VOLTAGE TEST (UNDERCHARGED BATTERY) 06-32
FIGURE 35: CHECKING TRANSISTORS TR1 06-34
FIGURE 36: CHECKING TRANSISTORS TR2 06-34
FIGURE 37: TYPICAL CRANKING MOTOR CROSS-SECTION 06-35
FIGURE 38: STARTING MOTOR TEST CONNECTIONS 06-36
FIGURE 39: PINION CLEARANCE 06-39
FIGURE 40: HEADLIGHT ASSEMBLY 06-41
FIGURE 41: HEADLIGHT ALIGNER 06-42
FIGURE 42: HEADLIGHT ALIGNER 06-42

FIGURE 43: HEADLIGHT ALIGNER 06-42
FIGURE 44: HEADLIGHT ALIGNER 06-43
FIGURE 45: HEADLIGHT ALIGNER 06-43
FIGURE 46: SWITCH 06-46
FIGURE 47: STEPWELL 06-47
FIGURE 48: PARCEL RACK 06-48

1. GENERAL DESCRIPTION

This vehicle uses a dual voltage system to obtain two different voltages (12 and 24 volts) for various electrical controls and accessories. The main power source incorporates four maintenance -free *"Delco"* model 1150 batteries connected in parallel-series. All batteries are kept uniformly charged by means of a 100 amp battery equalizer (standard), giving a maximum possible output supply of 100 amps on the 12 volt system. Both the 12 and 24 volt systems are controlled through individual main battery relays. A 24 volt self -rectified alternator is belt driven from the engine, and can be reached by the engine compartment door.

2. WIRING AND MISCELLANEOUS ELECTRICAL

2.1 Wiring Diagrams

A master wiring diagram of the electric circuits, covering standard and optional accessories and systems, is located in technical publication box. Usually, a separate wiring diagram page is provided for each major function or system. In some cases, more than one circuit may appear on one wiring diagram page; when it occurs, each circuit covered in this page is listed in the wiring diagram index. Moreover, a circuit may appear on several pages; in such cases, the number(s) at the extremity of diagram title will indicate the sheet reference number. Refer to the *"Wiring diagram index"* to ensure that the correct diagram is being used to trace the circuit in question.

2.1.1 Wiring Diagram Symbols

Various symbols are used on the wiring diagrams to depict different types of electrical components. It is essential to become familiar with these symbols in order to understand the diagrams. The major symbols shown on the diagrams are identified under *"Wiring Diagram symbols"* (page **K** of wiring diagrams).

2.1.2 Using Wiring Diagrams

Two methods are used to *"work"* with electric wiring diagrams.

1. **You have identified the defective part (breaker, diode, relay, etc.), and you wish to locate its corresponding circuit.**

   Problem: Circuit breaker #56 is released (open circuit) and you don't know which circuit is affected.

   a) Refer to wiring diagram index, and look for *"Circuit breaker code"*, pages **F**.
   b) At item C.B #56, in the first column, you will find the page on which to find the corresponding diagram, in the second column the breaker ampere rating, and in the third column, the Prévost number. The other columns give you the location and the function of the breaker.
   c) Refer to page 14 keeping in mind the function of the breaker, i.e. emergency exit lights.
   d) When you have located *"emergency exit lights"*, follow wiring until you come across C.B #56 and its circuit.

2. **You have a problem with a specific system and you want to find the corresponding diagram.**

   Problem: The three (3) last speakers on R.H. side of vehicle are inoperative and you must trace the electric circuit.

   a) Refer to wiring diagram index and look for *"Sound system"*.
   b) You will find on page 26 the components as well as the electric wiring, thus providing you with a complete understanding of this circuit.

2.1.3 Testing Circuits

A careful study of the wiring diagrams should be made to determine the source and flow of current through each circuit. When a circuit is thoroughly understood, a point-to-point check can be made with the aid of the applicable wiring diagrams. Any circuit can be tested for continuity or short circuits with a multimeter or a suitable voltmeter.

All electrical connections must always be kept clean and adequately tight. Loose or corroded connections can result in discharged batteries, difficult starting, dim lights and improper functioning of other electric circuits. Inspect all wiring connections at regular intervals. Make sure knurled nuts on all amphenol-type plugs are securely tightened. Knurled nuts on the plastic amphenol -type connectors will click into a detent when properly tightened. Line connectors, which have the side locking tabs, must have the locks latched in place to ensure a proper electrical connection.

2.2 Wires and Connectors

2.2.1 Wire sizes and colors

Each wire in the electrical system has a specific size as designated on the wiring diagram. When repla c-ing a wire, the correct size must be used. Never replace a wire with one of a smaller size.

The vehicle electrical system is provided with diffe r-ent voltages. The insulation on each wire is distinctly colored in order to determine visually the wiring voltage and to assist in making connections. The wires are color coded as follows:

Red	24 volt system
Yellow	12 volt system
Black	grounded wire
Blue	110 V ac system (live)
White	110 V ac system (neutral)
Green	110 V ac system (ground)
Orange	speakers (+)
Brown	speakers (-)
Grey	spare wire

Note: *Wires are identified at each 4 -6 inch (10-15 cm) intervals by a printed number.*

Each wire on a diagram is patterned to assist in tracing and testing circuits. The wire number ident i-fies the voltage rating, the wire identification number, and the basic wire gauge as illustrated in figure 1.

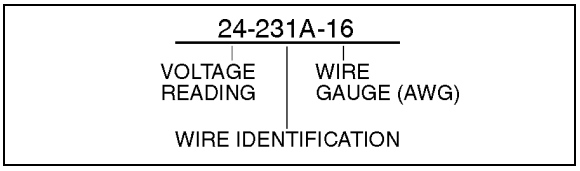

FIGURE 1: WIRE IDENTIFICATION 06048

2.2.2 Spare Wires

When vehicle leaves factory, and even in the case of a fully equipped vehicle, an important number of unconnected spare wires are routed between the junction boxes. Consequently, for any connection of an additional accessory, refer to page D *"Spare wires"* in the master wiring diagram to determine the number, the gauge and location of these wires.

Note: *Spare wires are identified by a wire identification number and by the letters "SP", to designate "spare".*

2.2.3 Cleaning Conectors with a HFC 134A Based Solvent

When the pins and sockets of connectors become dirty, clean them with a good quality solvent contain-ing HFC 134A refrigerent as its active ingredient. HFC 134A has two qualities that recommend it. First, it does not conduct electricity and therefore, will not cause shorting between connector pins and soc k-ets. Second, it evaporates quickly, eliminating the possibility of condensation within the connectors.

Always shake out or gently blow out any excess HFC 134A before assembling a connector to its mating connector or hardware. HFC 134A trapped in the connector can affect the connector seal.

Warning: *HFC 134A is toxic. HFC 134A based compounds should always be used in a well-ventilated area, never in a confined space. Use outdoor whenever possible.*

2.3 Circuit Breakers

All electric circuits are protected by circuit breakers of the *"Manual reset"* type. The main circuit brea k-ers, as well as those protecting A/C system, are located in the main power compartment, on R.H. side of the vehicle, behind the tag axle.

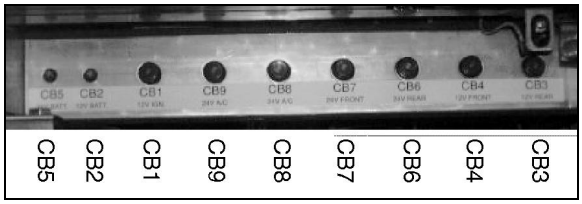

FIGURE 2: BREAKERS 06049

CB1	Ignition	12 volts	40 amps
CB2	Hot Wire	12 volts	30 amps
CB3	Rear Junction Box	12 volts	40 amps
CB4	Front Junction Box	12 volts	40 amps
CB5	Hot Wire	24 volts	30 amps
CB6	Rear Junction Box & Starter Relay	24 volts	90 amps
CB7	Front Junction Box & Inverter Compartment	24 volts	90 amps
CB8	A/C Junction Box & Evaporator Fan	24 volts	150 amps
CB9	A/C Condenser Fan Motor	24 volts	150 amps

The smaller circuit breakers are accessible in front and L.H. rear electrical compartments. This type of circuit breaker deenergizes the circuit without di s-connecting any wire. Simply press down the red tab on breaker to open circuit, repair defective circuit, and afterwards depress black button in center of breaker to close circuit.

2.4 Relays

Relays are used to automatically energize or dee n-ergize a circuit from a remote location. The relay draws a very low current to energize its coil. Once the coil is energized, it develops a magnetic field which pulls a switch arm closed or open, to either energize or deenergize a given component. As the control current required for the coil is very low, the relay allows a remote station to control a high energy circuit without running great lengths of costly high capacity cable, and also eliminates the need for high amperage switches and heavy connectors.

Many systems on this vehicle are provided with control relays, which are all located in or on the junction boxes.

Note: *Each relay is identified with "12 V" or "24 V" printed on its casing in order to identify the coil operating voltage.*

Caution: The magnetic relays for the starting motor, evaporator and both condenser motors and co n-denser speed controls should have the 5/16" stud nuts torqued to 50 ± 5 lbf.in (5,5 ± 0,5 N-m).

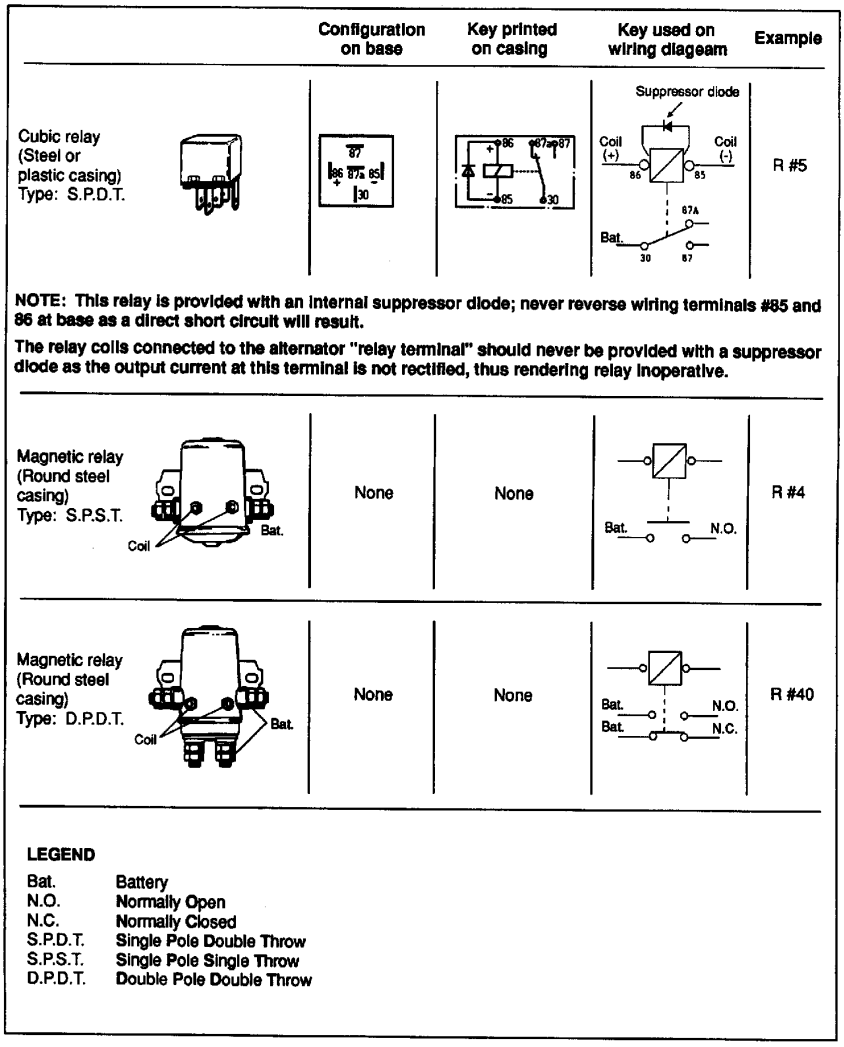

FIGURE 3: TYPES OF RELAYS 06050

3. ELECTRICAL COMPARTMENTS AND JUNCTION BOXES



FIGURE 4: ELECTRICAL COMPARTMENT 06051

3.1 Maintenance

A Cortec VCI-238 corrosion inhibithor has been sprayed in all electrical compartments to protect components from corrosion. The life expectancy of this product is five years, so it is recommended to reapply it every five years. It is also recommended to spray it on new components when added or replaced.

Warning: *Use VCI-238 in a well ventilated area. Do not smoke. Avoid prolonged contact with skin and breathing of spray mist. Harmful or fatal if swallowed. Do not induce vomiting. Call physician immediately.*

3.2 Main Electrical Compartment

The main electrical compartment is located on rear R.H. side of vehicle aft the rear wheelhousing. This compartment contains the following comp o-nents (Fig. 5 and 6):

- four group 3 or two 8D batteries;
- main circuit breakers;
- voltage regulator;
- battery equalizer;
- electric system monitor;
- main battery relays (safety switch);
- battery booster block.

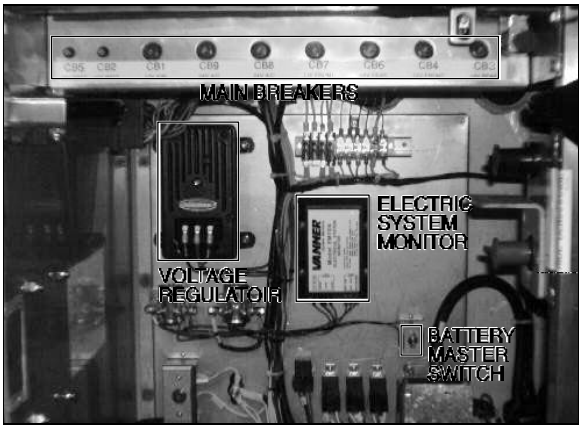

FIGURE 5: MAIN ELECTRICAL COMPARTMENT 06052

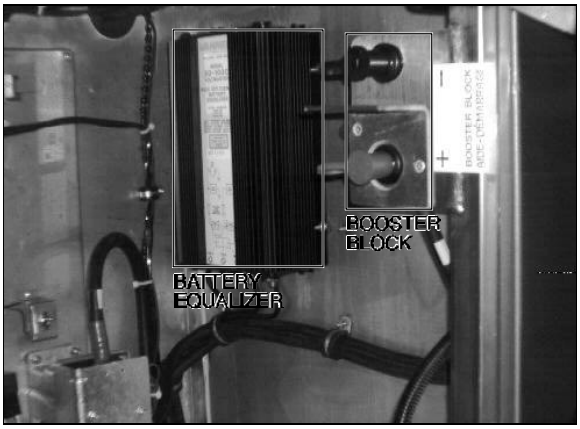

FIGURE 6: MAIN ELECTRICAL COMPARTMENT 06053

3.3 Rear Electrical Compartment and Junction Box

The rear electrical compartment is located on L.H. side of vehicle aft the rear wheelhousing. It co n-tains the rear junction box with the following components (Fig. 7 and 8):

- ECU (Electronic Control Unit) for Allison World Transmission;
- vehicle interface module;
- secondary circuit breaker;
- relays;
- programmable speed switch.

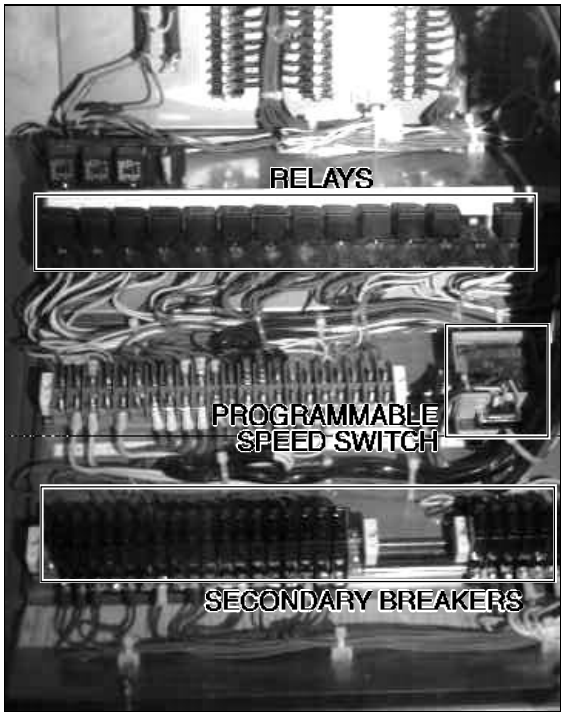

FIGURE 7: REAR ELECTRICAL COMPARTMENT 06054

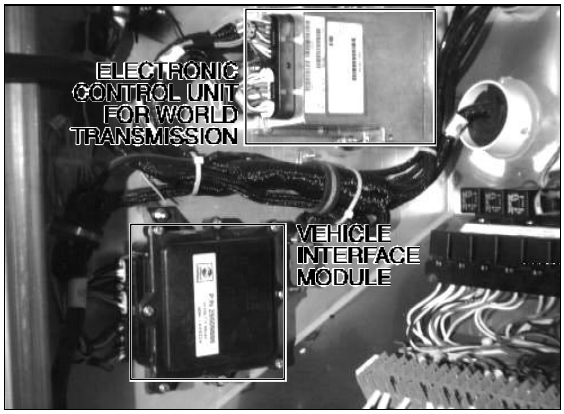

FIGURE 8: REAR ELECTRICAL COMPARTMENT 06055

3.4 Front Electrical Compartment and Junction Box

The front electrical compartment is located on L.H. side of vehicle, over the front axle. It contains the front junction box with the following components:

Left Section (Fig. 9)

- ECU for Antilock Bracking system;
- blinker switch;
- junction blocks;
- junctions and connectors.

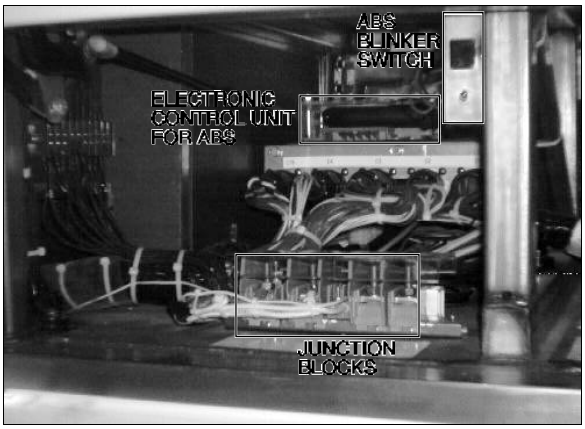

06056

FIGURE 9: FRONT ELECTRICAL COMPARTMENT - LEFT SECTION

On Front Junction Box (Fig. 10)

- secondary circuit breakers;
- relays;
- resistors;
- electronic flasher unit.

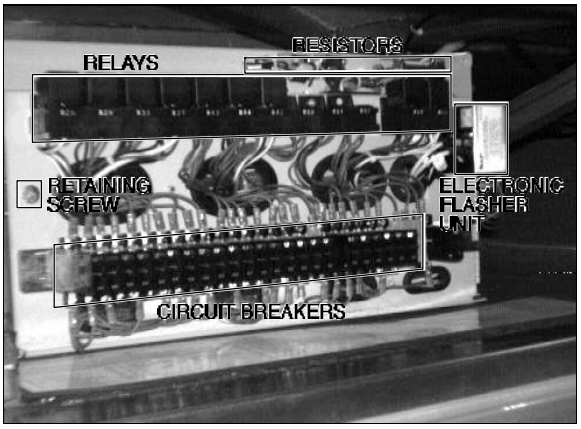

06057

FIGURE 10: FRONT ELECTRICAL COMPARTMENT - ON JUNCTION BOX

In Front Junction Box (Fig. 11)

To open front junction box, unscrew 1/4 turn the retaining screw.

- secondary circuit breakers;
- relays.

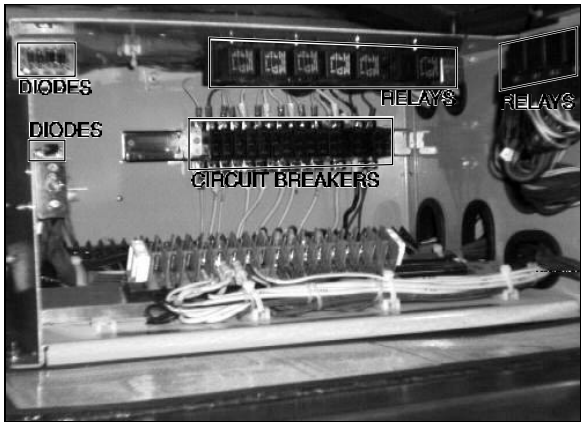

06058

FIGURE 11: FRONT ELECTRICAL COMPARTMENT - IN FRONT JUNCTION BOX

3.5 Alarm Junction Box

The alarm junction box is located in the front service compartment, under the driver's window. To gain access, open the front service compar t-ment door. This junction box contains the following items:

On Alarm Junction Box (Fig. 12)

- fire alarm;
- passenger chime (bus only);
- alarm units;
- pulse generator for windshield wiper motor;
- diodes;
- 120 volts inlet (in-station lighting, bus only).

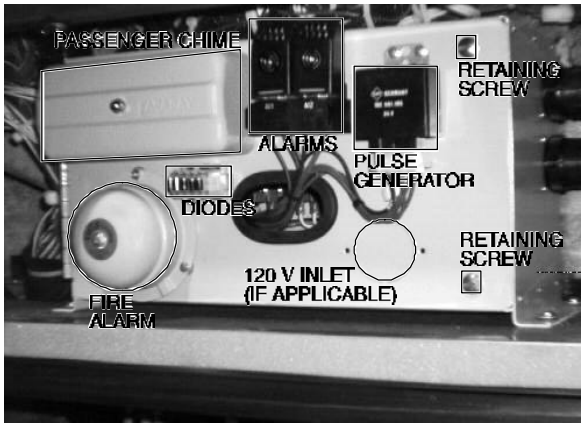

FIGURE 12: ON ALARM JUNCTION BOX 06059

FRONT ALARM JUNCTION BOX (Fig. 13)

To open alarm junction box, unscrew two 1/4 turn retaining screws.

- dash lights regulator (prior to V.I.N. 2PCH33410T1011300);
- junctions and terminals.

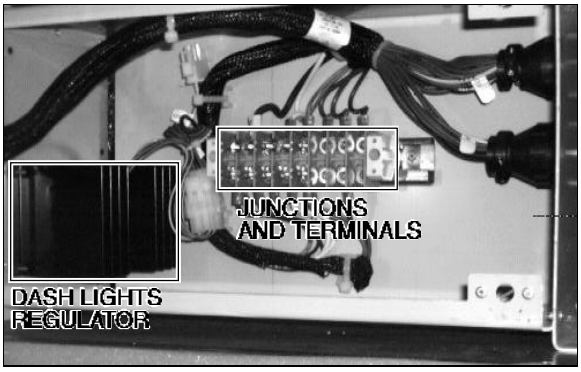

FIGURE 13: IN ALARM JUNCTION BOX 06060

3.6 Engine Starting Control Box

This control box is located in the R.H. side of engine compartment near the engine oil reserve tank. This junction box includes the engine starter selector switch, as well as the rear start push button switch to start engine from engine compartment.

3.7 A/C and Heating Junction Box

The A/C and heating junction box is located inside condenser compartment (Fig. 14). For maintenance purpose, this junction box has a sliding drawer which includes the A/C logic panel (W973B module), the electronic transmitter (T7067B printed circuit board), the A/C logic and control modules and some fuses. Open the second (H3-41) or third (H3-45) R.H. baggage compartment door then, unscrew the quarter turn screw and slide open the drawer. Refer to figure 15 for details.

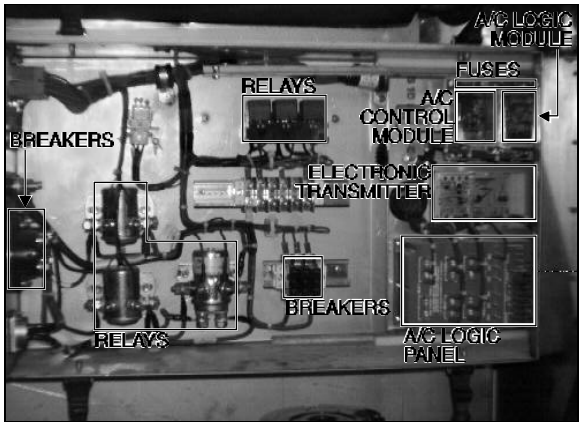

FIGURE 14: A/C AND HEATING JUNCTION BOX 06061

Note: *It is important when checking the A/C and heating system to keep the condenser compartment door closed in order to avoid faulty readings. Open the sliding drawer as indicated to verify the system.*

The complete junction box is accessible by opening the condenser compartment door. Remove the four (4) rubber latches, then remove the cover. This junction box includes the relays of the evaporator fan motor and condenser speed controls, as well as the circuit breakers and relays of the A/C logic panel, A/C compressor clutch, water pump and condenser fan motors. Furthermore, a diode for the preheater water pump signal is installed in this junction box, regardless if the vehicle is provided with or without this optional system. Refer to figure 15.

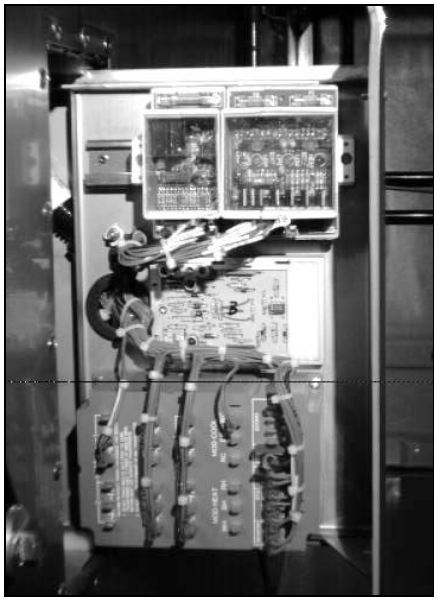

FIGURE 15: SLIDING DRAWER 06062

4. BATTERIES

4.1 General Description

The vehicle is provided with four (4) maintenance-free 12 volt heavy-duty batteries connected in series-parallel (Fig. 16). The top-mounted negative and positive terminals are tightly sealed to prevent leaks. Water never needs to be added to this type of battery. There are no filler caps in the cover. The battery is sealed, except for small vent holes in the cover. The vents must not be restricted as they allow small amount of gases that are produced in the battery to escape. The special chemical composition inside the battery reduces gassing to a very small amount at normal charging voltages. Besides reducing gassing, the special chemistry greatly reduces the possibility of overcharge damage.

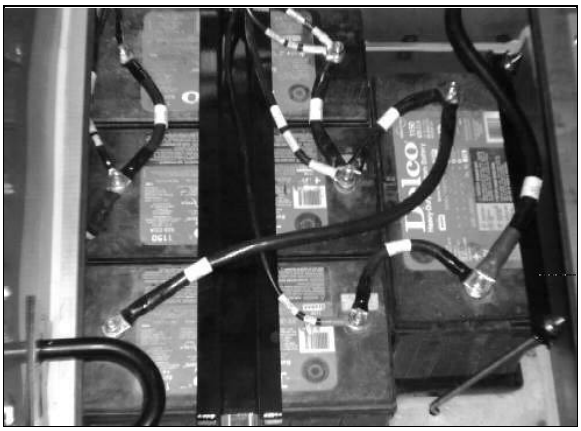

FIGURE 16: BATTERIES 06063

The vents require keeping the battery in an upright position to prevent electrolyte leakage. Tipping the battery beyond a 45 ° angle in any direction can allow a small amount of electrolyte to leak out of the vent holes.

Warning: *DO NOT tip battery by more than 45 when carrying or installing the battery.*

Evidence of electrolyte leakage does not necessarily mean the battery is defective.

With special cables properly attached to batteries, the metal surfaces that carry the current are completely sealed from the atmosphere. This prevents terminal oxydation and corrosion that may cause starting and charging problems. If new cables are required, sealed terminal cable replacements should be used to retain the reliability of the original maintenance-free connections.

Warning: *All lead-acid batteries generate hydrogen gas which is highly flammable. If ignited by a spark or flame, the gas may explode violently, causing spraying of acid, fragmentation of the battery, and result in possible severe personal injuries. Wear safety glasses when working near batteries. In case of contact with acid, flush immediately with water.*

The battery has four (4) major functions:

1. Providing a source of current for starting the engine.
2. Stabilizing the voltage in the electrical system.
3. Supplying current for a limited time, when electrical demands of the equipment exceed the power output of the alternator.
4. Providing a limited source of power for connected accessories, when the engine is not running.

4.2 Main Battery Relays

Main battery relays (12 V. and 24 V.) are provided for this vehicle. The relays are located in main electrical compartment. The 24 volt battery relay is actuated by two master switches connected in series, the first one located in main electrical compartment (refer to fig. 5), and the second one located on the dashboard.

When the main battery relays are turned to the "Off" position, all electrical supply from the batteries is cut off, with the exception of the following items:

- Tachograph clock;
- Battery equalizer check module;
- ECM ignition and power supply;
- ECU power (World transmission);
- Preheater electronic timer;
- Preheater and water recirculating pump;
- Sedan entrance door;
- Prodriver;
- Powerverter;
- Sound system.

4.3 Battery Removal and Installation

1. Remove the two screws at the bottom of the plastic protective cover. Unscrew the two quarter turn nuts to remove the protective cover.
2. Remove supports. Unscrew terminal nuts of each defective battery.

Note: *Battery main relays should be in the "Off" position before disconnecting cables from the batteries.*

3. Remove battery cables from the batteries.

Note: *When the battery cables have been removed from the batteries, wrap the battery terminals and cable ends with electric tape to prevent accidental grounding. The ground cables should always be disconnected first and replaced last.*

4. Remove batteries.

5. Installation is the reverse of removal.

Note: *In replacing batteries, only batteries of the same specification should be used. Refer to "Specifications" at the end of this section for further details.*

Caution: *Ensure that connections are not reversed when reinstalling batteries, since damage to electrical system components will result.*

When reinstalling batteries, battery connections must be torqued to 10-15 ft•lbs (13-20 N•m) and the nut on top of sliding tray to 45-55 in•lbs (5-6 N•m). A torque wrench is required to ensure an accurate tightening torque.

Warning: *To prevent possible electric shocks or sparking, the battery main relays must be set to the "Off" position before tightening an electrical connection.*

Note: *A protective coating should be applied on all terminals that have been disconnected, and this coating should be clear of silicone. We recommend the use of Cortec VCI-238 (Prévost #682460) on all electrical connections.*

4.4 Battery Rating

Each of the 12 volt batteries used on the vehicle has the following rating:

- Reserve capacity: 180 minutes
- Cold cranking (amps): 625 @ 0 °F (-18 °C)
- Cold cranking (amps): 490 @ -20 °F (-29 °C)
- Weight filled: 59 lbs (26,7 kg)

The reserve capacity is defined as the number of minutes a new, fully charged battery at 80 °F (26,6 °C) can be discharged at 25 amperes and maintain a minimum of 1.75 volts per cell (10.5 volts total for one 12 volt battery). This rating can be used as a basis for determining how long a vehicle might run after an alternator failure.

The cold cranking rating is defined as the minimum discharge current a battery will deliver in amperes for 30 seconds at 0 °F (-18 °C) while maintaining a minimum of 1.2 volts per cell (7.2 volts total for one 12 volt battery). This rating can be used as a basis for comparing starting performance.

4.5 Battery Testing

The maintenance-free battery has a stro ng ability to withstand the damaging effects of overcharge. The test indicator in the cover is used only to dete r-mine if the battery can be tested in case of a cran k-ing problem.

The test indicator in the battery cover is to be used with accepted diagnostic procedures only. It must not be used to determine if the battery is good or bad, or charged or discharged. The test indicator is a built-in hydrometer in one cell which provides visual information for battery testing (Fig. 17).

It is important when observing the test indicator, that the battery be relatively level and has a clean indicator top to see the correct indication. A light may be required in some poorly lit areas. Under normal operation, two indications can be observed.

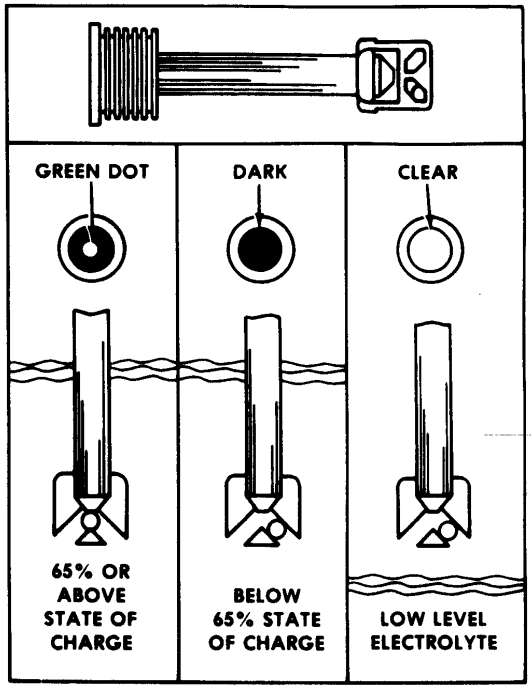

FIGURE 17: TEST INDICATOR 06096

Green Dot Visible

Any green appearance is interpreted as a *"green dot"*, and the battery is ready for testing. On rare occasions, following prolonged cranking, the green dot may still be visible when the battery is obv i-ously discharged. Should this occur, charge the battery as described under *"Charging Procedure"* in *"Battery Charging"* later in this section.

Dark - Green Dot Not Visible

If there is difficulty cranking the engine, the battery should be tested as described in this section. On rare occasions, the test indicator may turn light yellow. In this case, the integral charging system should be checked. Normally, the battery is cap a-ble of further service; however, if difficult start has been reported, replace the battery. **DO NOT CHARGE, TEST, OR JUMP-START.**

4.5.1 Visual Inspection

1. Check the outside of the battery for a broken or cracked cover or case that could permit loss of electrolyte. If obvious physical damage is noted, replace the battery.
2. Check for loose terminal posts, cable conne c-tions, damaged cables, and for evidence of corrosion. Correct conditions as required b e-fore proceeding with tests.

4.5.2 Removing Surface Charge

Disconnect cables from the battery and attach alligator clamps to the contact lead pad on the battery as shown in figure 19. Connect a 300 ampere load across the terminal for 15 seconds to remove surface charge from the battery.

4.5.3 Load Test

This test is one means of checking the battery to determine its ability to function as required in the vehicle.

To make this test, use test equipment that will withstand a heavy electrical load from the battery, such as a carbon pile resistor or other suitable means.

1. Connect a voltmeter, ammeter, and a variable load resistance as illustrated in figure 18.

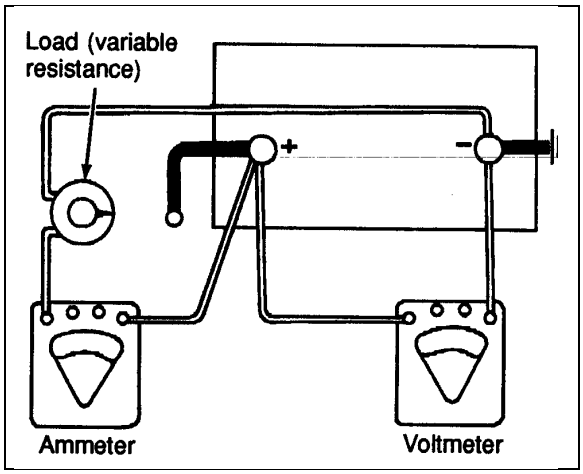

FIGURE 18: LOAD TEST 06064

Caution: *Observe polarity of the meters and the battery when making connections, and select the correct meter range.*

2. Apply a 290 amperes load to the battery for 15 seconds.
3. With an ammeter reading specified load, read voltage. The voltage should be at least 9.6 volts. Disconnect the load. If the voltmeter ind i-cates 9.6 volts or more, the battery is good. If the volmeter reading is less than 9.6 volts, r e-place the battery. This voltage is to be used for battery ambient temperatures of 70 °F (21 °C) and above. For temperatures below 70 °F (21 °C), refer to the followin *g "Voltage and Temperature Chart"*.

Voltage and Temperature Chart

Ambient Temperature	Minimum Voltage
70 °F (21 °C) and above	9.6
60 °F (16 °C)	9.5
50 °F (10 °C)	9.4
40 °F (4 °C)	9.3
30 °F (-1 °C)	9.1
20 °F (-7 °C)	8.9
10 °F (-12 °C)	8.7
0 °F (-18 °C)	8.5

Note: *The accuracy of this test procedure is dependent upon close adherence to the proper load, time and temperature specifications.*

4.5.4 Testing Battery Cables

Check all cable ring terminals and connections to determine if they are in good condition. Excessive resistance, generally caused by poor connections, produces an abnormal voltage drop which may lower voltage at the starting motor to such a low value that normal operation of the starting motor will not be obtained. An abnormal voltage drop can be detected with a low-reading voltmeter as follows:

Warning: *To prevent the engine from starting, the DDEC III engine circuits, which are protected by breakers (CB-19, CB-20 and CB-21) located in the main electrical compartment, must be deenergized during these tests; afterward, depress black button to close circuit.*

1. Check voltage drop between grounded (negative) battery terminal and vehicle frame by placing one prod of the voltmeter on the battery terminal and the other on a good ground (unpainted surface) on the vehicle. With the starting motor cranking the engine at a temperature of 70 °F (21 °C), voltage reading should be less than 0.3 volt. If the voltage reading exceeds 0.3 volt, there is excessive resistance in this circuit.
2. Check voltage drop between the positive battery terminal and the starting motor positive terminal stud while the motor is operated. If the reading is more than 2.5 volts, there is excessive resistance in this circuit.

Note: *If it is necessary to extend the voltmeter lead for this test, use a #16 (AWG) or larger wire.*

3. Check voltage drop between the starting motor housing and a good ground on the vehicle. The reading should be less than 0.2 volt.

Warning: *Any procedure other than the following could cause personal injury or damage to the charging system resulting from battery explosion or electrical burns.*

Wear adequate eye protection when working on or near the batteries. Ensure that metal tools or jumper cables do not contact the positive battery terminal (or a metal surface in contact with it) as a short circuit will result.

Do not attempt to jump start a vehicle suspected of having a frozen battery because the battery may rupture or explode.

Both the booster and discharged batteries must be treated carefully when using jumper cables. Follow exactly the procedure outlined later in this section, being careful not to cause sparks.

4.6 Battery Charging

Warning: *During charging of the batteries, an explosive gas mixture forms in each cell. Part of this gas escapes through the vent holes and may form an explosive atmosphere around the battery itself if ventilation is poor. This explosive gas may remain in or around the battery for several hours after it has been charged. Sparks or flames can ignite this gas causing an internal explosion which may shatter the battery.*

1. Do not smoke near a battery which is being charged or which has been recently charged.

2. Do not break live circuits at battery terminals because a spark usually occurs at the point where a live circuit is broken. Care must always be taken when connecting or disconnecting booster leads or cable clamps on chargers. Poor connections are a common cause of electric arcs which cause explosions.

3. The electrical system on this vehicle is negative ground. Installing the batteries with the positive terminals grounded or incorrect use of the booster battery and jumper cables will result in serious damage to the alternator, batteries and battery cables.

4.6.1 Charging Procedure

The batteries used on this vehicle can be charged either on or off the vehicle; however, when they are removed from the vehicle, it is recommended that an adapter kit, which is available from any *"A/C DELCO"* dealer, be used in charging sealed-terminal batteries. Use the booster block to charge the batteries when they are left on vehicle and **make sure that the main battery disconnect switch is set to the *"On"* position.**

The alligator clamps of the tester or charger must be placed between the terminal nuts and the lead pads of the terminal studs (Fig. 19) after the vehicle cables are detached.

The alligator clamps should make firm contact with the lead pads.

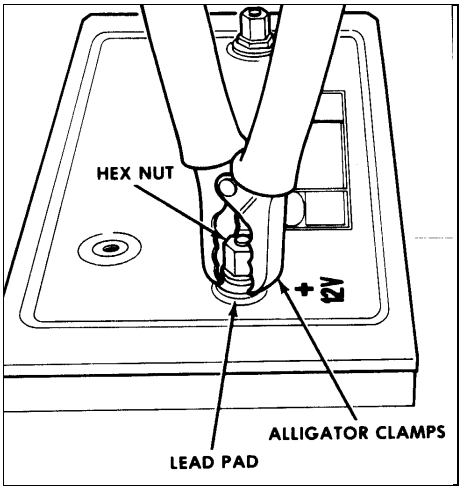

FIGURE 19: ALLIGATOR CLAMPS AND BATTERY
06065

Note: *If this connection cannot be made because of the alligator clamp design, the load value for testing must be reduced from 290 to 260 amperes.*

On rare occasions, such as those that occur following prolonged cranking, the green dot in the test indicator may still be visible when the battery is obviously discharged. Should this occur, a boost charge of 20 ampere-hours is recommended. Under normal operating conditions, do not charge battery if the green dot is visible. The battery should never be charged if the test indicator (hydrometer) is clear or light yellow. If this occurs, replace the battery.

A charge rate between 3 and 50 amperes is generally satisfactory for any maintenance-free battery as long as spewing of electrolyte does not occur or the battery does not feel excessively hot (over 125 °F (52 °C)). If spewing or violent gassing of electrolyte occurs, or battery temperature exceeds 125 °F (52 °C), the charging rate must be reduced or temporarily stopped to allow cooling and to avoid damaging the battery.

Battery temperature can be estimated by touching or feeling the battery case. The battery is sufficiently charged when the green dot in the built-in hydrometer is visible. No further charging is required. Shake or tilt the battery at hourly intervals during charging to mix the electrolyte and see if the green dot appears.

Warning: *Always turn off the charger before connecting or disconnecting it to or from a battery.*

Note: *The charge rate must be doubled when the batteries are charged by the booster block, because of the series-parallel circuit.*

Battery charging consists of a charge current in amperes for a period of time in hours. Thus, a 25 ampere charging rate for 2 hours would be a 50 ampere-hour charge to the battery. Most batteries, whose load test values are greater than 200 amperes, will have the green dot visible after at least a 75 ampere-hour charge. In the event that the green dot does not appear, replace the battery.

4.6.2 Battery Charging Guide

Fast Charging Rate

20 amps @ 3-3/4 hours
30 amps @ 2-1/2 hours
40 amps @ 2 hours
50 amps @ 1-1/2 hours

Slow Charging Rate

5 amps @ 15 hours
10 amps @ 7-1/2 hours

The time required for a charge will vary according to the following factors:

Size of Battery

For example, a completely discharged large heavy-duty battery requires more than twice the recharging time of a completely discharged small passenger car battery.

Temperature

For example, a longer time will be needed to charge any battery at 0 °F (-18 °C) than at 80 °F (27 °C). When a fast charger is connected to a cold battery, the current accepted by the battery will be very low at first, then in time, the battery will acccept a higher rate as it warms up.

State of Charge

For example, a completely discharged battery requires more than twice as much charge than a half-charged battery. Since the electrolyte is nearly pure water and a poor conductor in a completely discharged battery, the current accepted is very low at first. Later, as the charging current causes the electrolyte acid content to increase, the charging current will likewise increase.

Charger Capacity

For example, a charger which can supply only 5 amperes will require a much longer period of charg-

ing than a charger that can supply 30 amperes or more.

4.6.3 Emergency Jump Starting With Auxiliary (Booster) Battery

Warning: *Do not jump start vehicles equipped with maintenance-free batteries if the test indicator is light yellow.*

Both booster and discharged batteries should be treated carefully when using jumper cables. A vehicle with a discharged battery may be started by using energy from a booster battery or the battery from another vehicle.

Warning: *Jump starting may be dangerous and should be attempted only if the following conditions are met:*

The booster battery or the battery in the other vehicle must be of the same voltage as the battery in the vehicle being started, and must be negative grounded.

If the booster battery is a sealed -type battery without filler openings or caps, its test indicator must be dark or a green dot must be visible. Do not attempt jump starting if the test indicator of the booster battery or the discharged battery has a light or bright center.

Warning: *Follow the procedure exactly as outlined hereafter. Avoid making sparks.*

1. Wear eye protection and remove rings, watches with metal bands and other metal jewelry.
2. Apply parking brake and place the transmission shift lever or push -button pads in Neutral (N) position in both vehicles. Turn off lights, heater and other electrical loads. Observe the charge indicator. If the indicator in the discharged battery is illuminated, replace the battery. **Do not** attempt jump starting when indicator is illuminated. If the test indicator is dark and has a green dot in the center, failure to start is not due to a discharged battery and the cranking system should be checked. If charge indicator is dark but the green dot does not appear in center, proceed as follows:
3. Connect one end of one red jumper cable to the positive (+) terminal of the booster power source and the other end to the positive (+) post of the booster power block, located in the main electrical compartment (refer to fig. 6).
4. Connect one end of the remaining negative jumper cable (black) to the negative (-) terminal of the booster power source, and the other end of the black jumper cable to the negative (-) post of the booster power block.
5. Make sure the clips from one cable do not inadvertently touch the clips on the other cable. Do not lean over the battery when making connections. The ground connection must provide good electrical conductivity and current carrying capacity.
6. Start the engine in the vehicle that is providing the jump start. Let the engine run for a few minutes, then start the engine in the vehicle that has the discharged batteries.
7. When removing the jumper cables, perform the above procedure exactly in reverse order, and replace protective caps on booster block terminals.

Warning: *Any procedure other than the above could result in personal injury, property damage due to battery explosion, or damage to the charging system of the booster vehicle or of the boosted vehicle.*

Note: *Jumper cables must withstand 500 cranking amperes. If cable length is 20 feet (6 m) or less, use 2/0 (AWG) gauge wires. If cable length is between 20 -30 feet (6 -9 m), use 3/0 (AWG) wires.*

4.7 Cleaning and Inspection

The external condition of the battery and the battery cables should be checked periodically. The top of the battery should be kept clean and the battery hold-down clamp bolts should be kept properly tightened. For best results when cleaning the battery, wash first with a diluted solution of ammonia or soda to neutralize any acid present, then wash out with clean water. The battery hold-down bolts should be kept tight enough to prevent the batteries from moving, but they should not be tightened to the point that excessive strain is placed on the battery hold-down cover (proper tightening torque: 45 -55 in•lbs (5-6 N•m)).

To insure good contact, the battery cable ring terminals should be tight on the battery posts. If the posts or cable ring terminals are corroded, the cables should be disconnected and the posts and clamps cleaned separately with a soda solution and a wire brush. Install cable ring terminals on battery posts and tighten to a torque of 10 -15 ft•lbs (13-20 N•m). Replace protective caps to prevent corrosion and sparks.

4.8 Common Causes of Battery Failure

When a battery fails, the cause of failure may be related to something other than the battery. For this reason, when a battery failure occurs, do not be satisfied with merely recharging or replacing the battery. Locate and correct the cause of the failure to prevent recurrence. Some common external causes of battery failure are as follows:

1. A defect in charging system such as high resi s-tance or a faulty alternator or regulator.
2. A malfunction within the 12 volt system (equalizer).
3. Overloads caused by a defective starter or excessive use of accessories.
4. Dirt and electrolyte on top of the batteries cau s-ing a constant drain.
5. Hardened battery plates, due to battery being in a low state of charge over a long period of time.
6. Shorted cells, loss of active material from plates.
7. Driving conditions or requirements under which the vehicle is driven for short periods of time.
8. A constant drain caused by a shorted circuit such as an exposed wire or water infiltration in junction boxes causing ground fault.
9. Extended operation of preheating system with engine not running.
10. Failling to close disconnect switches during the night.

4.9 Troubleshooting

If a battery is known to be good and then has not performed satisfactorily in service for no apparent reason, the following factors may reveal the cause of trouble:

1. Vehicle accessories and disconnect switches inadvertently left on overnight.
2. Defects in the charging system, such as high wiring resistance, faulty alternator, regulator or battery equalizer.
3. A vehicle electrical load exceeding the alternator (or battery equalizer) capacity, with the addition of electrical devices, such as CB radio equi p-ment, a cellular phone or additional lighting sy s-tems.
4. Defects in the electrical system, such as shorted or pinched wires.
5. Extended driving at a slow speed while using many accessories.
6. Loose or poor battery cable-to-post connections, previous improper charging of a run -down bat-tery, or loose hold-down clamp bolts.
7. High-resistance connections or defects in the cranking system.

5. ELECTRICAL SYSTEM MONITOR

This vehicle is equipped with an electronic device that monitors and detects an abnormal alternator, voltage regulator, battery banks or battery equalizers conditions. The monitor is installed on back wall of the main electric compartment (refer to fig. 5). The *"Battery balance"* and *"Battery Hi/Lo"* warning lamps connected to this module are mounted in dashboard (refer to *"Operator's Manual"* for location). If a ma l-function should occur, the monitor sends a signal to the driver through the warning light of the malfun c-tioning component. If the *"Battery Hi/Lo"* warning light is illuminated, check the 24 volt voltmeter to determine if battery voltage is too high or too low.

Note: *According to battery charging condition, it is normal that "Battery Hi/Lo" warning light illuminates upon starting the engine and stays illuminated for a few seconds. This is caused by the normal voltage drop of the battery during starting.*

5.1 Warning Lamp Definitions

5.1.1 Battery Hi/Lo

Voltmeter drops below 24 V dc
- Check alternator output.
- Check voltage regulator.
- Check battery connections.
- Check battery cells.
- Check battery equalizer connections.

Voltmeter exceeds 30 V dc
- Check alternator output.
- Check voltage regulator.
- Check battery connections.

5.1.2 Battery Balance

Note: *Allow at least 15 minutes to balance batteries after any corrective measure has been taken.*

1. **Batteries out of balance (difference greater than 1.5 volts between the two battery banks)**
   - Check battery equalizer connections.
   - Check equalizer cables for proper gauge.
   - Check battery connections.
2. **Demand for 12 volt power exceeding rated amperage output of battery equalizers cau s-ing batteries to go out of balance**
   - Reduce 12 volt load or install additional ba t-tery equalizer(s).

5.1.3 "Battery" Warning Light

This warning light is not controlled by the electronic monitor, but by the "R" terminal of the alternator using the normally -closed contact of the relay "R-33". If a voltage drop should occur in the charging system, the *"Battery"* warning light will immediately light up to warn the driver and will be followed by the illumination of the *"Battery Hi/Lo"* warning light if the voltage drops below 24 V dc .

Refer to heading *"Diagnosis of charging system problems"* later in this section, to determine whether the alternator or the voltage regulator is defective. Should the *"Battery"* warning light illuminate while the 24 volt voltmeter keeps on giving a normal reading and the *"Battery Hi/Lo"* warning light does not illuminate, the relay R-33 or its wiring is probably defective.

Caution: *The relay R -33 should never be replaced with a relay provided with a suppressor diode on its coil as the output current (between 12 and 14 volts) at the alternator "R" terminal is not rectified, thus rendering relay inoperative.*

Note: *When the "Battery" warning light illum i-nates, the "A/C & Heating" system shuts off in order to prevent battery discharge.*

6. ALTERNATOR

The 24 volt charging system consists of a belt driven, oil-cooled, brushless alternator, a 24 volt voltage regulator, an alternator relay and a 12 volt system that includes a 12 volt, 100 amp equalizer. The components used in this system are described under the applicable headings hereafter.

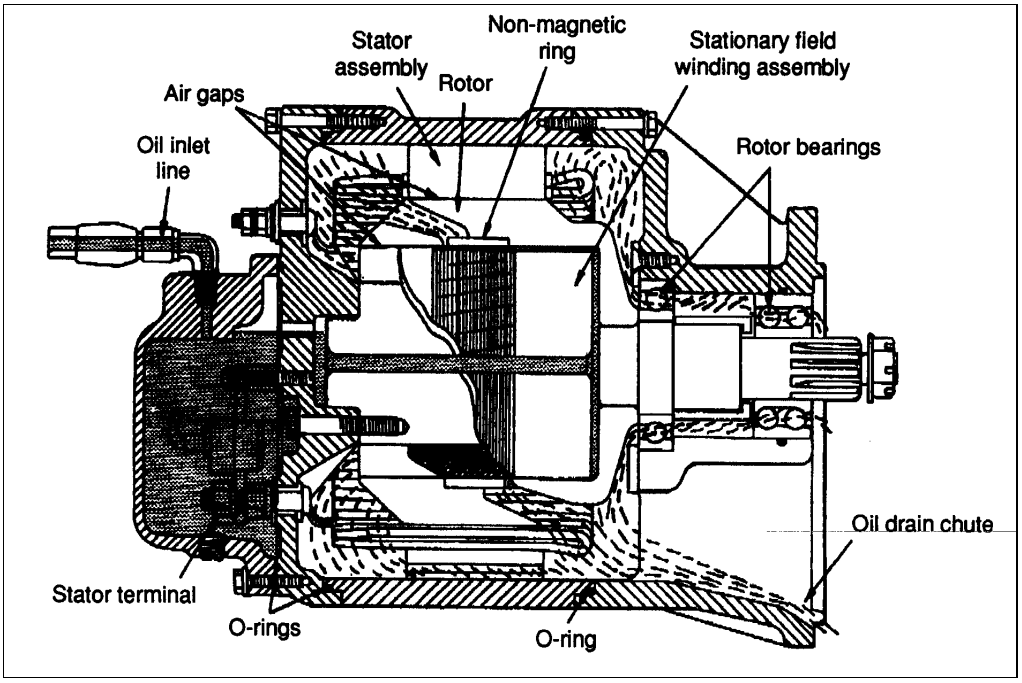

FIGURE 20: OIL CIRCULATION THROUGH ALTERNATOR 06066

This oil-cooled alternator is self-rectifying. All current carrying members, windings, built -in diodes, and field coils are stationary. The only moving component is the rotor. The alternator is a totally-enclosed unit, cooled and lubricated by engine oil. The oil inlet is on the diode end cover. The oil drains back into the engine crankcase through the drive end frame and drive adapter housing. The alternator should never be operated with the oil supply line disconnected. A continuous flow of engine oil flows through the alternator to lubricate the bearings and cool the assembly.

Four terminals are used on this alternator: the DC output terminal, two field terminals, and a 12 volt relay terminal. The alternator output voltage is regulated by a separate 24 volt regulator that co n-trols the alternator field current.

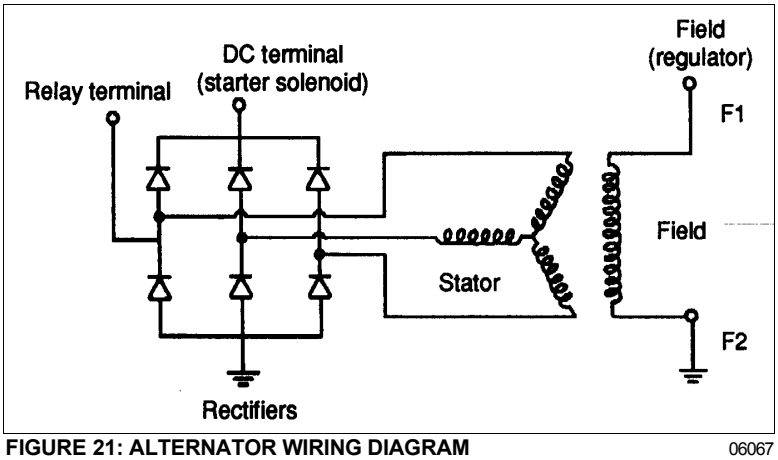

FIGURE 21: ALTERNATOR WIRING DIAGRAM 06067

Note: *The relay coils connected to the altern a-tor "relay terminal" SHOULD NEVER BE PROVIDED WITH A SUPPRESSOR DIODE as the output current at this terminal is not rect i-fied, thus rendering relay inoperative.*

Caution: *The electrical system is NEGATIVE GROUND. Connecting the batteries or a battery charger with the positive terminal grounded will endanger the alternator diodes and vehicle wiring by a high current flow. Burned wiring harness and burned "open" diodes will result. Always ensure that the alternator and bat tery polarities are matched prior to installation. THE ALTERNATOR WILL NOT REVERSE TO ACCEPT INVERSE POLARITY. Also, do not ground or short across any of the alternator or regulator ter-minals.*

Since there are no brushes, slip rings, or rubbing seals, the alternator requires no periodic maintenance other than the following:

1. Check alternator -to-engine mounting bolts for looseness and tighten to the proper torque.

2. Check all electrical connections for tightness and corrosion. Clean and tighten connections as necessary. Be sure wiring insulation is in good condition and that all wiring is securely clipped to prevent chafing of the insulation.

3. With the engine running, listen for noise and check the alternator for vibration. If the alternator is noisy or vibrates excessively, it should be removed for inspection and repair.

4. Ensure that battery terminals are clean and tight.

6.1 Diagnosis of Charging System Problems

The troubleshooting of the charging system is made easier by the use of a 12 and a 24 volt voltmeter, *"Battery"*, *"Battery balance"* and *"Battery Hi/Lo"* warning lights mounted in the dashboard (for location refer to the *"Operator's Manual"*). The definition of each warning light is explained under the heading *"*5. ELECTRICAL SYSTEM MONITOR*"*.

6.1.1 Alternator or Voltage Regulator

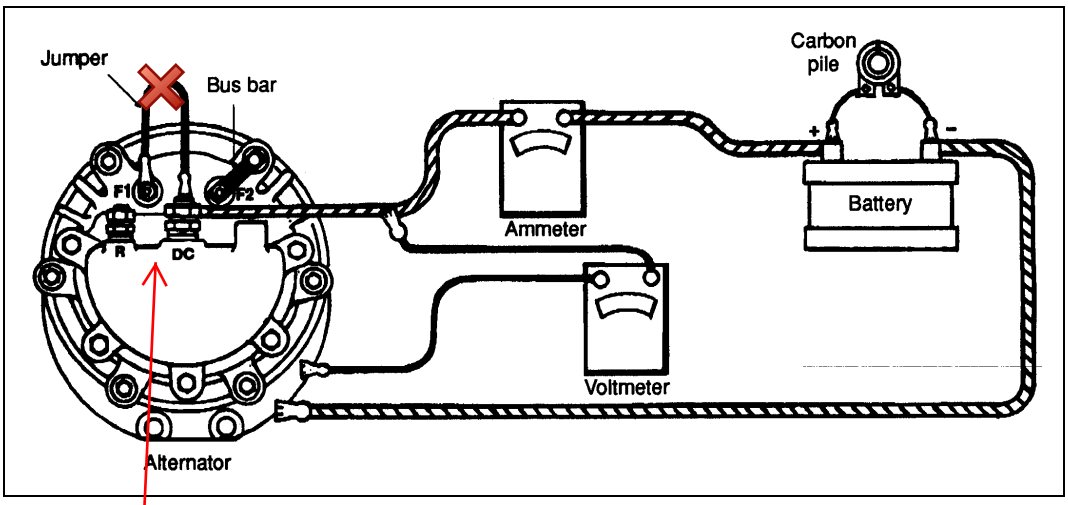

BAD PRACTICE. NEVER JUMP F1 FIELD TERMINAL TO DC (+) TERMINAL

6.2 Alternator Diagnosis

Caution: *Before checking the alternator, TURN OFF the battery main disconnect switch.*

It is not necessary to completely disassemble the alternator to make electrical checks. All electrical checks are made at the diode end of the assembly without having to remove the rotor, drive end frame, or bearing. If the electrical components are not defective, but bearing replacement is necessary, this can be done at the drive end without having to disassemble the diode end of the unit.

The components in the alternator which require electrical checks are the field winding, the six diodes, and the stator winding.

6.2.1 Diode Checks

Each diode may be checked for shorts and opens as follows:

1. Ensure the battery main disconnect switch is set to the "OFF" position.
2. Remove the pipe plug from underneath the end housing to drain the oil in the rectifier engine oil supply.
3. Remove the cap screws (7) and lock washers which attach the diode end cover to the end housing. Remove the end cover from the end housing.

Note: *Do not operate the alternator unless this unit is completely reassembled.*

4. Remove seal from the end housing, detach and remove "DC" and relay terminals, stud, insulating sleeves and O-rings.

5. Disconnect all diode flexible leads; i.e. three from the output terminal stud and three from the diode supports. See figure 23 for more details.

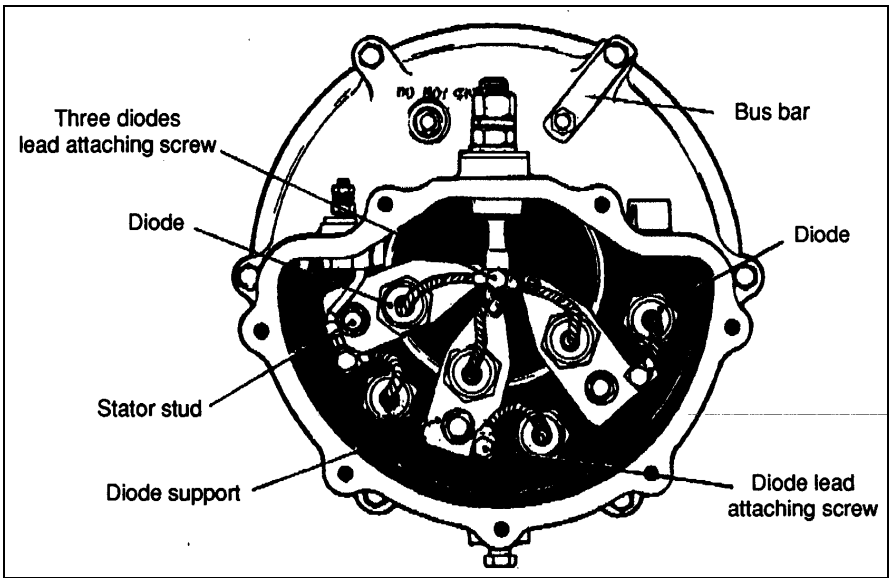

FIGURE 23: VIEW OF RECTIFIER END FRAME WITH COVER REMOVED 06069

Each diode may be checked for short or open circuits with an ohmmeter.

Note: *The ohmmeter polarity may be dete r-mined by connecting its leads to the voltmeter leads. The voltmeter will read up -scale when the negative leads are connected together and the positive leads are connected together. The polarity of the voltmeter leads may be dete r-mined by connecting the leads to the identified terminals on a battery.*

Note: *Use an ohmmeter with a single 1.5 volt cell. The most accurate reading will be dete r-mined when the 300 ohm value is calibrated to the center one-third of the scale. DO NOT USE high voltage, such as a 110 volt test lamp to check diodes.*

To check diodes mounted in the supports for short fields, connect the positive ohmmeter lead to each diode lead and the ohmmeter negative lead to each support as shown in "A", "B", and "C" of figure 24. To check diodes mounted in the end frame for short fields, connect the ohmmeter positive lead to each diode lead and the ohmmeter negative lead to the end frame as shown in parts "D", "E", "F". The ohmmeter readings may vary considerably when checking diodes for shorts, but if the reading is 300 ohms or less, the diode is probably defective and should be replaced. If the diode reads 300 ohms or less, it will allow excessive reverse current from the battery. Replace defective diodes as explained later in this section.

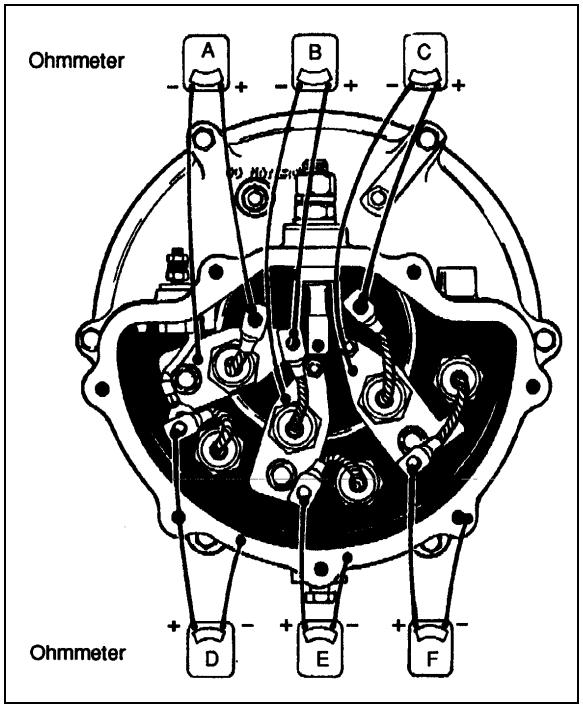

06070

FIGURE 24: CHECKING DIODES WITH OHMMETER ON A TYPICAL OIL COOLED ALTERNATOR (END COVER REMOVED)

To check the diodes mounted in the diode supports for open fields, connect the ohmmeter negative lead to each diode lead and the ohmmeter positive lead to each support as shown in parts "A", "B", and "C" of figure 25. To check the diodes mounted in end frame for shorts, connect the ohmmeter negative lead to each diode lead and the ohmmeter positive lead to the end frame as shown in parts "D", "E" and "F". An infinite resistance reading indicates an open diode. Diodes can be replaced by following the procedure outlined under the headings "6.3 DIODE REPLACEMENT".

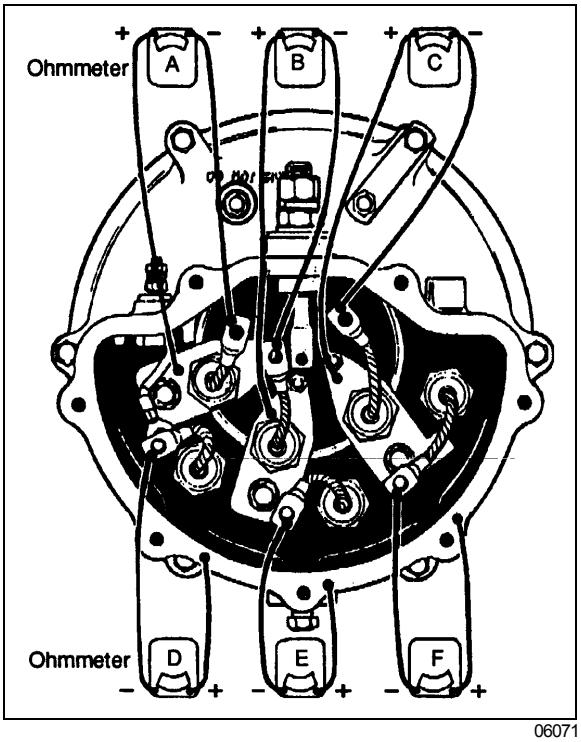

06071

FIGURE 25: CHECKING DIODES WITH OHMMETER ON A TYPICAL OIL COOLED ALTERNATOR (END COVER REMOVED)

When reinstalling diodes, torque to 9 -11 lbf·ft (12-15 N·m). Re-stake next to the threads in a n arbor press with an 1/8 inch (3,2 mm) round punch. Press the punch with gradual pressure. Do not strike as the shock may damage the diodes.

6.2.2 Field Winding Check

The field winding may be checked for short and open fields with an ohmmeter. To check the field winding, connect the ohmmeter to field terminal and to ground. A resistance reading above normal indicates an open, and a reading less than normal indicates a short field. The normal resistance value is 3.0 to 3.3 ohms at 80 °F (27 °C). An alternate method of checking is to place a battery, of a specified voltage, and an ammeter in series with the field winding. The current should register 7.2 to 8.3 amperes at 24 volts. Coil resistance is approximately 3.1 ohms. Amperage readings, other than the above, indicate an open, grounded, or shorted field. A defective field coil can be replaced by removing the end frame on which the field terminal is located and then removing the four field coil mounting screws. See the headings "6.4 FIELD REPLACEMENT" for a detailed procedure.

6.2.3 Stator Winding Check

The stator winding may be checked for open and short fields with an ohmmeter as follows:

Open Fields

Connect the ohmmeter leads to two pairs of diode supports as shown in parts "A", "B", and "C" of figure 26. Correct polarity of the leads must be observed. The ohmmeter should indicate a low resistance. If an infinite or a high resistance is measured in either one or both checks, the stator windings are open.

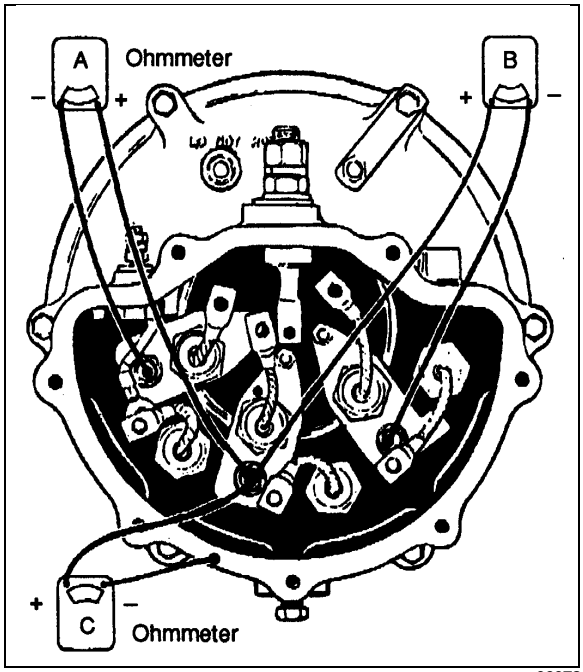

06072

FIGURE 26: CHECKING STATOR WINDING FOR "OPEN" AND GROUND

Ground

To check the stator windings for ground, connect an ohmmeter to the diode support and diode end frame as shown in part "C" of figure 26. The ohmmeter should indicate a very high or infinite resistance.

If zero, or a very low resistance is measu red, the windings are grounded.

Short Fields

The stator windings are difficult to check for short fields without finely calibrated laboratory test equi p-ment due to the very low resistance values of the windings. However, if all other alternator checks are satisfactory, yet the unit fails to perform to specific a-tions, shorted stator windings are probable.

6.3 Diode Replacement

The following replacement procedures are based on the assumption that the diode end cover is still off and diode leads were disconnected as explained earlier in this section.

Note: *When replacing a diode, make sure it is designed for a negative ground system. The diode can be identified by the symbol stamped on the diode case. The arrow must point t o-ward the diode flexible lead.*

To replace the three diodes which are mounted in the supports attached to the stator lead studs, it is necessary to remove the diode and support a s-sembly. The two outer diode and support asse m-blies are identical and can be installed on either side. The center unit has a different support, with 2 inches (50,8 mm) between the mounting hole centers.

Note: *The outer supports are provided with 2 1/4" (57,15 mm) center holes.*

6.3.1 Diode Replacement (in Support)

1. Remove nut with lock washer attaching the diode support to the stator lead stud.
2. Remove nut, lock washer, and flat washer attaching support to the small stud in the end frame.
3. Remove the diode and support assembly.Then remove insert from small hole in support or from small stud in the end frame.
4. Remove nut and flat washer from diode moun t-ing stud, then remove diode from the support.
5. Place a new diode in the support and install a flat washer and nut on the diode mounting stud. Hold the diode with a wrench placed over flats on the diode, while tightening nut on the mounting stud to a torque of 160-180 lbf•in (18-20 N•m).
6. Place diode and support assembly over the stator lead stud and the small mounting stud. Place insert over small stud inside the hole in the support. Install flat washer, lock washer, and nut on the small stud, and tighten to a torque of 22-25 lbf•in (2-3 N•m). Install nut with lock washer on stator lead stud and tighten firmly.

6.3.2 Diode Replacement (in End Frame)

To remove diode, use a thin 1 inch open end wrench on flats of the diode case to unscrew diode from the end frame. Thread the new diode into the end frame and tighten to a torque of 160 -180 in•lbs (18-20 N•m). If no other parts are to be replaced, refer to par a-graph "6.6 DIODE END COVER INSTALLATION" later in this section.

6.4 Field Replacement

6.4.1 Removal

1. Remove the three diode and support assemblies from the end frame to provide access to the two lower field to end frame bolts.
2. Remove nut with lock washer and flat washer from three stator lead studs.
3. Remove the six bolts and lock washers attaching the diode end frame to the stator frame.
4. Separate the end frame from the stator frame, and remove the end frame and field assembly from the rotor while pushing the stator lead studs out of the end frame.
5. Remove nut, lock washer, flat washer, and insulating washer which secure the field lead terminal stud in the end frame. Push the stud out of the end frame.
6. Remove field terminal stud insulating bushing and seal from the end frame. Remove insulating sleeve from the field terminal stud.
7. Remove the four bolts and lock washers attac h-ing the field to the end frame.
8. To separate the field from the end frame, install four 3/8-24 x 3 inch bolts in place of the 3/8 -24 x 2 inch bolts removed in step 7. Thread bolts in to even heights. Support the end frame in an arbor press. Then, using a suitable press plate to exert pressure on all four bolt heads, press the field out of the end frame.

6.4.2 Installation

1. Position the field assembly o n the end frame. Insert four 3/8 -24 x 3 inch bolts through the end frame and thread into the field to keep holes aligned.

2. Support the end frame on an arbor press bed so that the diodes will not be damaged, and press the field into the end frame. Press in until shoulder on field coil bottoms against the end frame.
3. Remove the four guide bolts. Install four 3/8-24 x 2 inch bolts, using new lock washers to attach the field to the end frame. Tighten bolts securely.
4. Place insulating sleeve in inner side of the field terminal stud hole in the end frame, and insert the terminal stud through the sleeve. Place two O-rings and insulating bushing over the terminal stud and push into hole in the end frame. Install insulating washer, flat washer, toothed lock washer, and nut on terminal stud. Tighten firmly.
5. Install each stator lead stud in the end frame as follows: Place insulating washer over the stud and insert the stud through the end frame. Place the insulating bushing over the stud and position in end frame hole. Install flat washer, lock washer, and nut on the stud.Tighten firmly.
6. Install three diode and support assemblies on the end frame as previously directed under "6.3 DIODE REPLACEMENT".
7. Install a new seal in notch around end of the stator frame. Insert field into the rotor and position the end frame against the stator frame. Attach end frame to the stator frame with six bolts and lock washers. Tighten bolts firmly.
8. If no other parts require replacement, refer to paragraph "6.6 DIODE END COVER INSTALLATION" later in this section to complete the assembly.

6.5 Stator Replacement

If tests performed under "Stator winding checks" earlier in this section indicated an open circuit or short in the stator, the stator and frame assembly must be replaced.

6.5.1 Removal

1. Remove diode end frame and field assembly as previously directed in steps 1 through 4 under *"Removal"* in *"Field replacement"* procedure.
2. Remove the six bolts and lock washers attaching the stator frame to the drive end frame.
3. Separate the stator frame from the drive end frame and remove the stator frame from the end frame and rotor.

6.5.2 Soldering Stator Terminal Leads

1. Using a wire brush, thoroughly clean the wire and terminal.
2. Silver solder the stator lead to the terminal using a torch.
3. Thoroughly clean the silver solder connection with a wire brush.
4. Using a high grade energized rosin flux, coat the silver soldered connection with a 80-20 tin-lead solder or pure tin solder to prevent deterioration of the silver solder by engine oil.

Note: *The silver solder will provide the required mechanical strength which will not be affected by temperature. The tin-lead solder will protect the silver solder connection from deterioration by engine oil.*

6.5.3 Installation

1. Position new seal in notch around the drive end of the stator frame.
2. Position the stator and frame assembly over the rotor against the drive end frame. Attach the stator frame to the drive end frame with six bolts and lock washers. Tighten bolts firmly.
3. Install diode end frame and field assembly as directed in steps 5, 6 and 7 UNDER "6.4.2 INSTALLATION"
4. Install rectifier end cover as directed later.

6.6 Diode End Cover Installation

1. Make sure all diodes are properly installed and securely tightened. Leads from diodes threaded into the end frame must be securely attached to the diode supports. The relay terminal lead must also be attached to the left diode support.
2. Connect leads from the three diodes mounted in supports to the output terminal stud. Tighten the attachment screw firmly. Place insulating bushing over relay terminal stud.
3. Place a new seal in the diode end frame.
4. With the end cover in place against the end frame, install the cap screws (7) and lock washers. Tighten the cap screws evenly and firmly.
5. Make sure the drain plug was installed in bottom of the end cover and was securely tightened.

6.7 Alternator Replacement

6.7.1 Removal

1. Place *"Starter selector switch"* in engine co m-partment to the *"*OFF*"* position.
2. Place the battery main disconnect switch to the *"*OFF*"* position.
3. Remove alternator driving belt (refer paragraph "6.8 ALTERNATOR DRIVE BELT").

Note: *When reinstalling drive belt, it is impo r-tant to set the belt tension correctly (refer to the appropriate heading later in this section).*

4. Scratch off protective sealer from electrical connections (relay, field and positive terminals). Refer to figure 27.

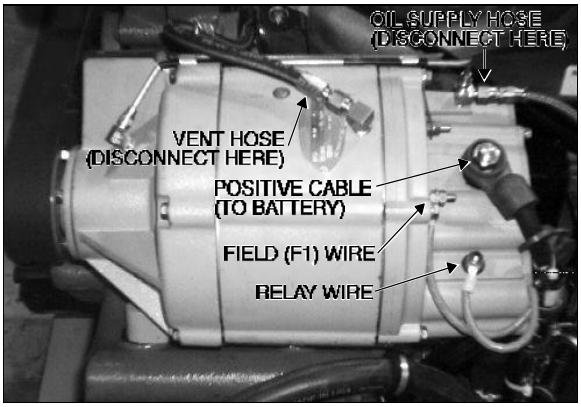

FIGURE 27: ALTERNATOR (HOSES AND WIRES) 06073

Note: *After reconnecting electrical wires, it is important to cover terminals with protective sealer (Prévost # 680745).*

5. Disconnect wire #25 from the relay terminal, wire #107 from the field "F1" terminal and disconnect battery cable from the positive "+" terminal on the diode end cover. Tag wires removed to ease identification at time of installation. Refer to fi g-ure 27.
6. Disconnect oil supply line and vent hose from top of alternator (Fig. 27) and tape lines to prevent entry of foreign matter. Disconnect oil drain hose from bottom of alternator (Fig. 28) and tape line to prevent entry of foreign matter.

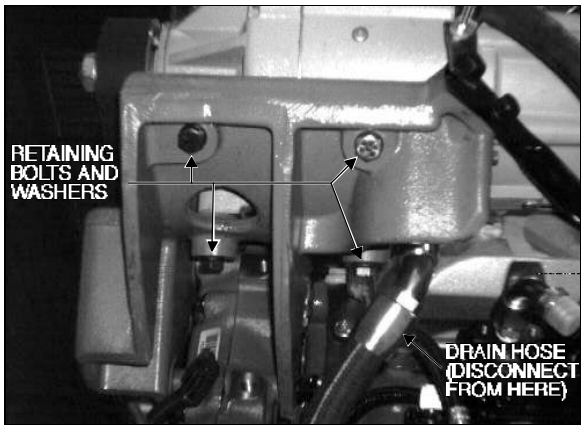

06074

FIGURE 28: ALTERNATOR RETAINING BOLTS AND WASHERS

7. Remove the four bolts and lock washer retaining alternator (refer to fig. 28).

Warning: *Alternator weight is approximately 150 lbs (70 kg). Another person is required to take the alternator out of engine compartment.*

8. Take the alternator out of engine compartment.

6.7.2 Disassembly of Alternator

After diode, field and stator winding checks, the alternator can be disassembled to repair a faulty component, such as field or stator, or to proceed with bearing or rotor replacement. The alternator may be disassembled by performing the following steps:

1. Remove nuts and washers from "DC" terminal on diode end frame.
2. Separate the diode cover plate from the diode end frame by removing the mounting screws.
3. Remove the washer, nut and lock washer attach-ing the diode supports to the end frame, the three screws connecting the diode leads to the diode supports, and the three nuts which attach the stator studs to the diode supports.
4. Separate the diode support assemblies from the diode end frame, and the three nuts which co n-nect the studs to the diode end frame.
5. Mark the position of the drive end frame and diode frame with respect to the stator assembly so that the parts can be reassembled in the same position.
6. Detach the diode end frame and field assembly from the stator assembly by removing the attach-ing screws.

7. Separate the field assembly from the diode end frame by removing the four attaching screws.
8. Separate the rotor assembly and drive end frame from the stator assembly by removing the attaching screws.
9. Remove the shaft nut and washer and the pulley. Press the rotor shaft out of the drive end frame.
10. Remove the retainer plate and pull the bearings from the drive end frame.

6.7.3 Alternator Cleaning and Inspection

Whenever the alternator is disassembled, it should be cleaned and inspected.

Cleaning

If sludge has accumulated on the stator, a light mineral oil should be used to clean it.

Inspection

When the alternator has been disassembled to the extent that the stator is exposed, the stator should be checked for the following:

a) Adequate varnish.

b) Proper spacing of conductors so that "near shorts" do not exist.

c) Proper phase lead placement.

d) Strong conductor and cross-over welds.

6.7.4 Bearing or Rotor Replacement

Whenever the rotor and drive end frame are disassembled for any reason, the single -row ball bearing must be replaced with a new one due to the probability of damage during disa s-sembly.

Removal and Disassembly

1. If the pulley was not removed from the rotor shaft at time of alternator removal, remove the nut and flat washer from the shaft and pull the pulley off the shaft.
2. Remove the six bolts and lock washers attaching the drive end frame to the stator frame. Separate the drive end frame from the stator frame. R e-move the drive end frame and support assembly.
3. Support the drive end frame in an arbor press so that the rotor can be pressed down out of the end frame. Using a suitable adaptor against the end of the rotor shaft, which will pass through the inner race of the double -row ball bearing, press the rotor down out of the end frame and bea r-ings. Since the single -row bearing outer race is held in the end frame by the retainer plate, and the inner race is press fit onto the rotor shaft, the bearing will probably be damaged when the shaft is pressed out and need to be replaced with a new part.
4. Remove the six screws attaching the bearing retainer plate to the drive end frame. Remove the retainer plate, the single -row bearing and the bearing spacer from the end frame.
5. Support the drive end frame in an arbor press with the double -row bearing down, so that the bearing can be pressed down out of the end frame. Using a suitable driver which will exert a force on the bearing outer race, press the bea r-ing out of the end frame.
6. Remove the rubber bearing clamp from the groove in the end frame.

Assembly and Installation

1. Install a new single -row ball bearing into inner side of the drive end frame. Install the bearing retainer plate and attach with six screws. Stake screws in place after tightening.
2. Position the rubber bearing clamp in the groove in bearing bore of the drive end frame. Lubricate the clamp to permit the bearing to be pressed in without dislodging or damaging the clamp.
3. Position the rotor in an arbor press with the shaft end up. Install the drive end frame and si n-gle-row bearing assembly over the rotor shaft. Using a driver over the rotor shaft, which will e x-ert a force on the bearing inner race, press the bearing onto the shaft until it bottoms against the rotor.
4. Install bearing spacer over the rotor shaft. Pos i-tion the double-row bearing over the rotor shaft at end frame bore. Using an adaptor which will e x-ert a force on both the inner and outer races of the bearing, press the bearing onto the shaft and into the end frame until the inner race bottoms against the bearing spacer.
5. Place a new seal around the drive end of the stator frame.
6. Insert the rotor between the stator and field, and position the drive end frame against the stator frame. Attach the end frame to the stator frame with six bolts and lock washers. Tighten the bolts to a torque of 5 to 5.4 lbf ·ft (6-7 N·m).

Caution: *When replacing the alternator on the vehicle, ensure that an alternator with the proper drive ratio is used. Installation of an alternator with any other drive ratio will result in severe and costly damage to the alternator and engine.*

6.7.5 Reassembly

Reassembly is the reverse of disassembly.

Note: *When tightening the outside nut on the "DC" output terminal, torque the nut to 30 -35 lbfft (41-47 Nm). The lower nut should be supported while tightening the top nut.*

When reinstalling diodes, tighten to a torque of 9-11 lbfft (12-15 Nm).

6.7.6 Output Check

When removed from the engine, the alternator may be checked without circulating oil on a test bench,, providing the output is limited to 100 amperes or less. The alternator may be bench tested without circulating oil at outputs exceeding 100 amperes, as long as the period of operation is limited to less than 15 seconds.

Caution: Operating the alternator at outputs greater than 100 amperes without adequate oil circulation for periods exceeding 15 seconds, will cause the alternator to overheat, resulting in damage to the winding and diodes.

If the alternator is to be operated at an output greater than 100 amperes for longer than 15 seconds, circulating oil must be provided. SAE 30 engine oil must be applied to the connection on the diode end cover at a pressure of 35 psi and at a temperature of 60 °F to 220 °F (16 °C to 104 °C). This will provide an oil flow of about one gallon per minute.

To check the alternator on a test bench, make electrical connections as shown in figure 22. Make sure the negative battery terminal is connected to the alternator frame.

6.8 Alternator Drive Belt

6.8.1 Removal and Installation

Removal

1. Loosen the two bolts retaining the tensioning arm (Fig. 29).

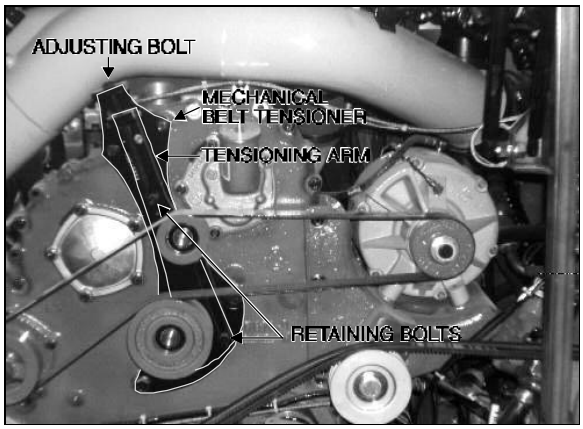

FIGURE 29: ALTERNATOR DRIVE BELT 06075

2. Unscrew the adjusting bolt to slacken belt.
3. Remove belt.

Installation

Installation of the alternator drive belt is the reverse of removal.

Note: *After belt installation, it is importantto tension belt as per heading "6.8.2 ADJUSTMENT".*

6.8.2 Adjustment

Correct belt tension is required to maximize belt life. The following procedure describes proper tensioning practices.

Note: *Steps 1 and 2 should only be performed on new belts.*

1. Loosen the two bolts retaining tensio ning arm. Use the adjusting bolt to tension belt to 300 pounds.

Note: *A belt tension gauge (Prévost # 011742) is available and is supplied with an instruction sheet. Refer to that procedure to use belt tension gauge correctly.*

2. Run engine for 10 minutes and allow the belt to cool for 10-15 minutes.
3. Measure the belt tension. If tension on the belt is greater or equal to 200 pounds, no retensioning is required. If tension on the belt is less than 200 pounds, retension the belt to 200 pounds.

7. VOLTAGE REGULATOR

The 24 volt regulator is located on the back wall of the main electrical compartment. For location, refer to figure 5.

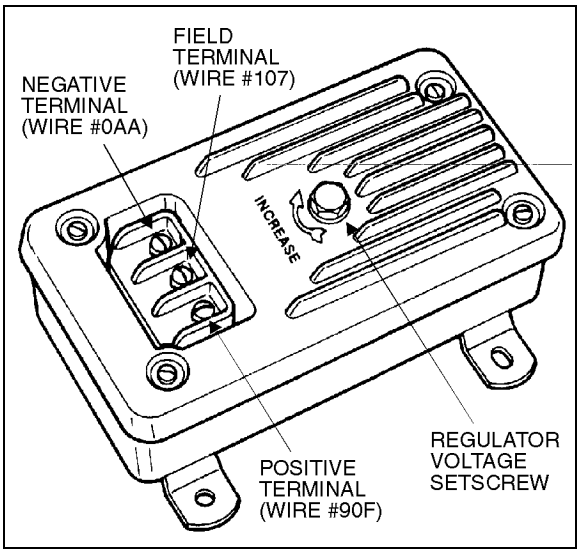

FIGURE 30: VOLT REGULATOR 06076

7.1 Description

The transistor regulator illustrated in figure 30 is an assembly mainly consisting of diodes, capacitors, resistors and transistors. These components are mounted on a printed circuit panel board to form a completely static unit containing no moving parts. Regulators of this type have only **three** terminals which are identified "NEG" (ground), "FLD" (field) and "POS" (battery).

The regulator components work together to limit the alternator voltage to the preset value by controlling the alternator field current. This is the only function that the regulator performs in the charging system.

The voltage at which the alternator operates is determined by the regulator adjustment. Once adjusted, the alternator voltage remains constant. The regulator is unaffected by length of service, changes in temperature, or changes in alternator output and speed.

A typical wiring diagram of a negative ground system is illustrated in figure 31. This diagram shows only the basic charging system components. It does not show any components such as the control relays. Refer to *"Charging system"* wiring diagram, in *"Wiring diagrams"* for the electric circuits and connections.

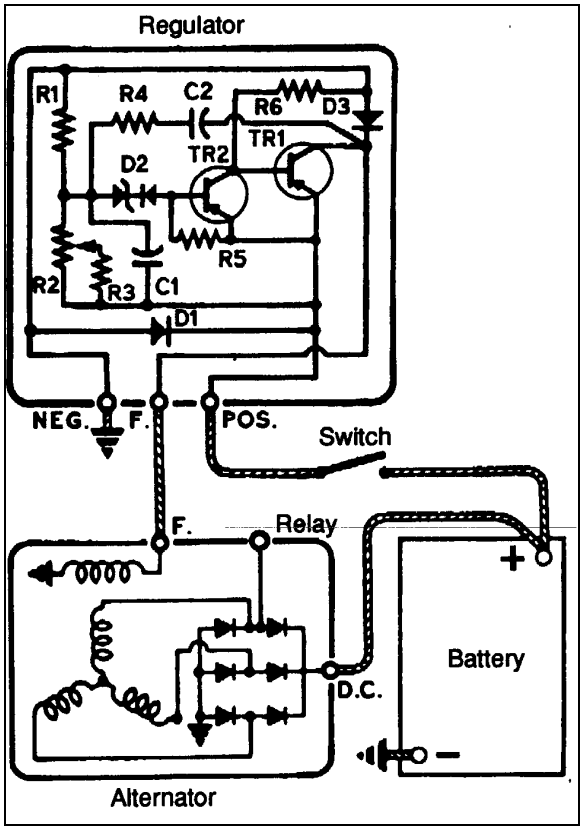

06077

FIGURE 31: TYPICAL WIRING DIAGRAM OF A NEGATIVE GROUND SYSTEM

7.2 Troubleshooting Procedures

Trouble in the electrical system will usually be indicated by one of two conditions: an undercharged or an overcharged battery. Either condition can result from an improper voltage regulator setting.

The absence of gassing during the continuous appearance of the green dot in the battery's built-in hydrometer indicates that the voltage setting is satisfactory.

7.3 Checking Regulator Voltage Setting

1. To check the voltage setting, connect a voltmeter across the "POS" and "NEG" terminals on the regulator, and an ammeter to the "DC" terminal on the alternator. Refer to figure 32.

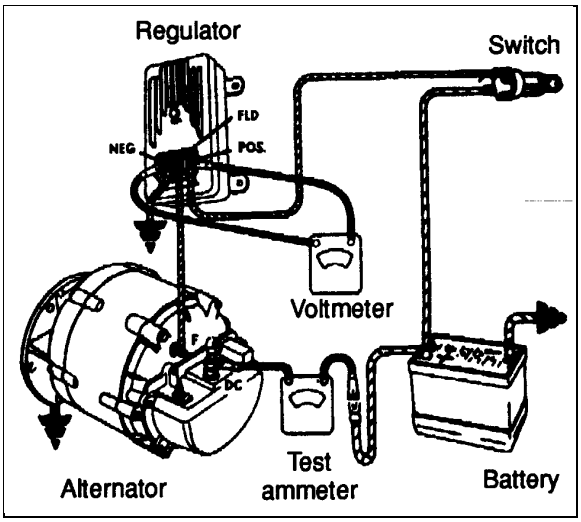

FIGURE 32: REGULATOR VOLTAGE TEST 06078

2. Operate the engine at approximately 1000 rpm (about 2300 alternator rpm), with accessories on, to obtain an alternator output of 20-200 amperes.
3. Note the voltage setting. It should be steady at 27.5 volts.
4. If not, the desired setting can be obtained by removing the plug from the voltage regulator cover and slightly turning the adjusting screw i n-side the regulator. Turn the adjusting screw clockwise to increase the voltage setting or counterclockwise to decrease it. See figure 33 for details.

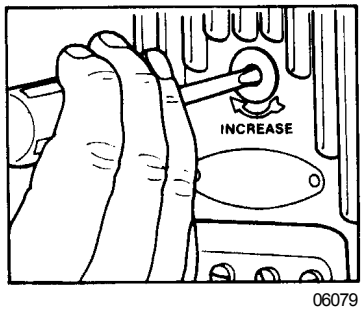

06079

FIGURE 33: ADJUSTING REGULATOR VOLTAGE SETTING

Note: *If regulator voltage cannot be adjusted to the specified setting, remove the regulator and repair or replace it as necessary.*

7.3.1 Undercharged Battery

If the voltage setting is steady and reasonably close to the specified value and the battery is unde r-charged, raise the setting by 0.3 volts, then check for an improved battery condition over a minimum service period of 48 hours. If the voltage cannot be adjusted to the desired value, the alternator should be checked as follows:

1. Stop alternator, turn off all accessories and disconnect battery ground cable.
2. Disconnect all leads from the regulator and from the alternator field. **Do not allow leads to touch ground**.
3. Connect a voltmeter and an ammeter in the circuit at the alternator "DC" terminal.
4. Connect a jumper lead from the alternator "DC" terminal to the alternator field terminal.
5. Connect a carbon pile resistor load across the battery. Turn to the *"OFF"* position.
6. See figure 34 for wiring connections.

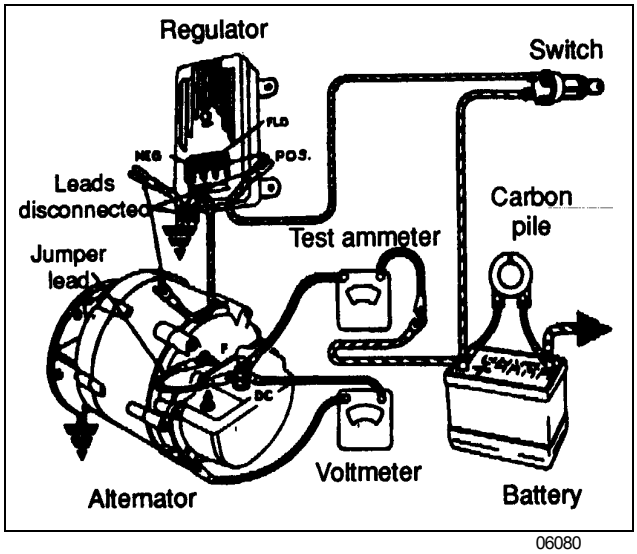

06080

FIGURE 34: REGULATOR VOLTAGE TEST (UNDERCHARGED BATTERY)

7. Reconnect battery ground cable.
8. Turn on all vehicle accessories.
9. Operate alternator and adjust carbon pile resistor load as required to check for rated output as given in Delco -Remy Service Bulletin 1G -187 or 1G-188.

10. Check the alternator field winding as follows:

Disconnect the lead from the field terminal and connect an ohmmeter from the field terminal to ground. A resistance reading above normal indicates an open field, and a resistance reading less than normal indicates a shorted or grounded field. The normal resistance can be calculated by dividing the voltage by the field current published in Delco-Remy Service Bulletin 1G-186, 1G-187, or 1G-188. The normal resistance value should be at or near midscale on the ohmmeter for accuracy. An alternate method of checking is to connect a battery of specified voltage and an ammeter in series with the field winding, and compare readings with published specifications in Delco-Remy Service Bulletin 1G-186, 1G-187, or 1G-188. An alternator is defective if it does not produce rated output or if field windings are faulty. If the alternator provides rated output, and field windings check satisfactorily, the regulator should be checked as covered under heading "7.4 REGULATOR CHECKS".

7.3.2 Overcharged Battery

If the voltage setting as checked above is steady and reasonably close to the specified value, lower the setting by 0.3 volt and check for an improved battery condition over a minimum service period of 48 hours. If the voltage cannot be adjusted to the desired value, proceed as follows: where the alternator field is grounded internally in the alternator as shown in figure 31, a shorted or grounded field or a defective regulator can cause an overcharged battery. The field winding can be checked as covered in paragraph "7.3.1 UNDERCHARGED BATTERY". If the field winding is found to be correct, the alternator is not defective, and the regulator should be checked as covered under heading "7.4 REGULATOR CHECKS".

7.4 Regulator Checks

Separate the cover from the base, and remove the panel assembly from the cover. Carefully note the location of all washers and lock washers.

The component parts are keyed to figure 31. Before making electrical checks, visually inspect the components and make sure all soldered connections are secure. Various electrical checks with an ohmmeter can be made to determine which components are defective.

The ohmmeter **must** be accurate, and should be a scale-type meter with a 1.5 or 3 volt cell. Most digital ohmmeters cannot be used to check semiconductors. However, some digital ohmmeters are specially designed to test semiconductors and can be used to test components in the regulator. Consult the ohmmeter's manufacturer for specifications concerning the capabilities of the ohmmeter.

It is important that all of the following checks be made. If a defective part is found, replace it before proceeding with the remaining checks. Be sure to make all the checks since more than one component may be defective.

A defective regulator can be repaired according to the following methods:

A) By changing the printed circuit board in the regulator. Unscrew the retaining screws on the printed circuit board and remove it. Install a new printed circuit board. This method is the most commonly used.

B) By removing any retaining screws involved and unsoldering the connections. When resoldering, limit solder time to a minimum as excessive heat may damage the printed circuit board and component parts. However, good soldered connections are essential for satisfactory operation. A resin core 63% tin 37% lead solder with a 360 °F (182 °C) melting point is recommended along with a soldering iron rated at 50 watts or less. Use extreme care to avoid over heating. Before checking the printed circuit board, remove transistor TR1, which must be checked separately. Connect the ohmmeter as shown in figure 35, and then reverse the ohmmeter leads to obtain two readings on the same component. Use the middle scale on scale-type meters on which the 300 ohm value should be within, or nearly within, the middle third of scale.

Capacitors C1 and C2 = The ohmmeter should read high and low on each capacitor. If not, replace capacitor.

Diodes D1, D2, and D3 = Each diode should give one high and one low reading. If not, replace diode.

Resistor R2 = Turn voltage adjustment screw (identified in figure 33) with ohmmeter connecting each way. Reading should change as slotted screw is turned. If not, replace R2.

Transistor TR1 = See figure 35. Use the low scale. Each of the three checks should read low and high. If not, replace TR1.

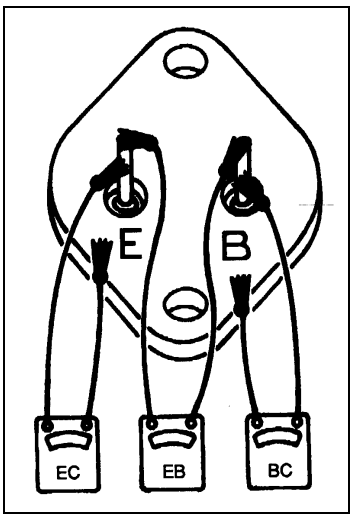

FIGURE 35: CHECKING TRANSISTORS TR1

Transistor TR2 = Change the ohmmeter to use the low scale. EB should read low and high. BC should read low and high. EC should both read high. If not, replace TR2. See figure 36.

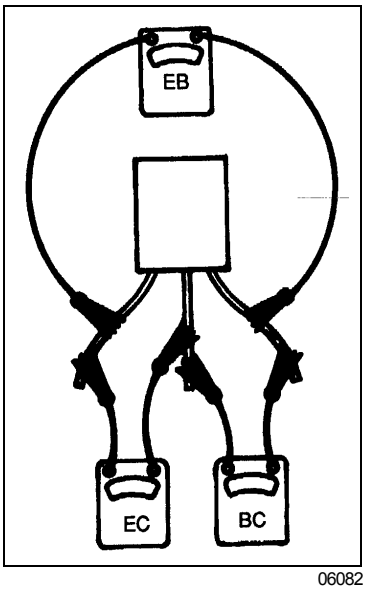

FIGURE 36: CHECKING TRANSISTORS TR2

7.5 Adjusting Voltage

After repair, the regulator must be adjusted to the desired voltage setting. Follow the procedure under "7.3 CHECKING REGULATOR VOLTAGE SETTING". Slowly turn the adjusting screw full range and observe the voltmeter to ensure that the voltage is being controlled, then, still turning, slowly adjust to the desired setting.

8. BATTERY EQUALIZER

Troubleshooting guide and owner manual on the battery equalizer (50 and 100 amps) are annexed at the end of this section.

Refer to paragraph "3. Electrical Compartments and Junction Box" of this section, for location.

9. STARTING MOTOR

9.1 Description

The starting motor has a shift lever and solenoid plunger that are totally enclosed to protect them from exposure to dirt, icy conditions and splashing.

Positive lubrication is provided to the bronze bushing located in the commutator end frame, in the lever housing and in the nose housing, by an oil-saturated wick that projects through each bushing and contacts the armature shaft.

The clutch is a *"Positork"* drive type, that meshes with the ring gear by the action of the solenoid. Once engaged, the clutch will not disengage during intermittent engine firing, which prevents damage to pinion and ring gear teeth. The pinion remains engaged until starting is assured and the solenoid circuit is interrupted. Refer to figure 37 for more details.

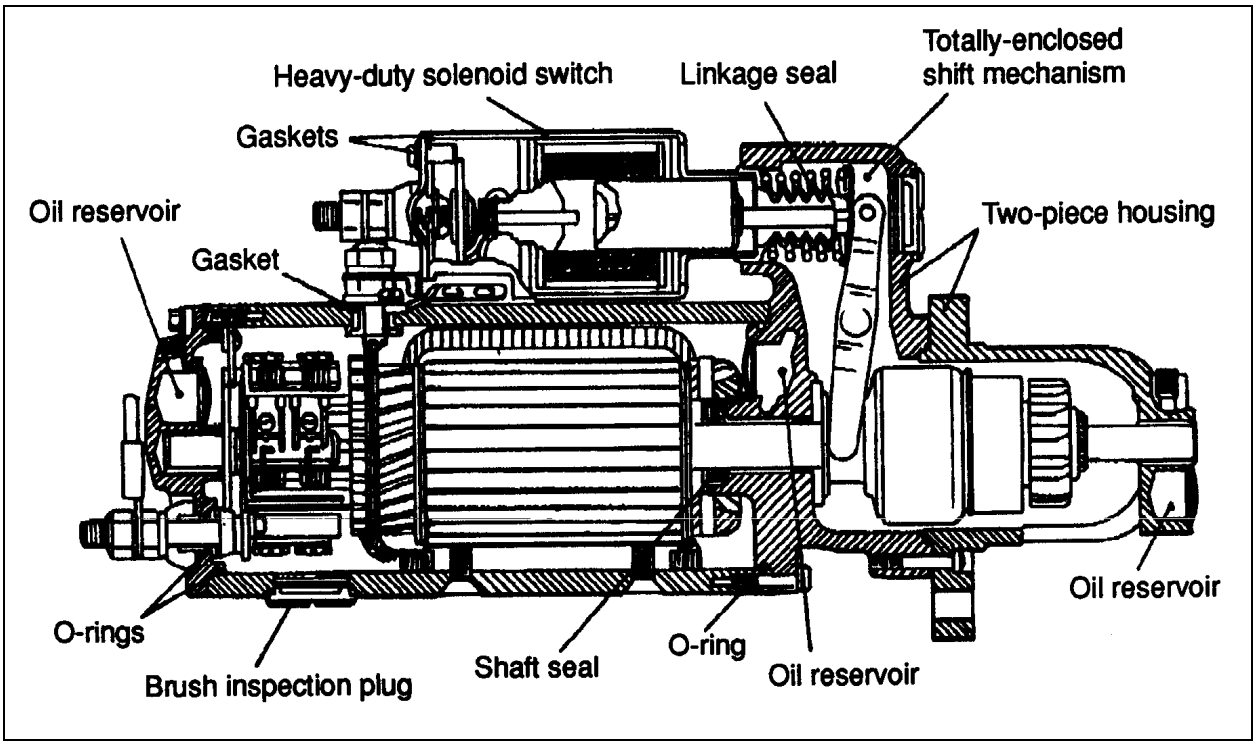

FIGURE 37: TYPICAL CRANKING MOTOR CROSS SECTION 06083

9.2 Maintenance

All wicks and oil reservoirs should be saturated with SAE 10 oil, and the splines underneath the clutch should be lubricated with a light coating of SAE 10 oil. Other than normal periodic lubrication and keeping cable connections clean and tight, the starting motor should require no periodic maint e-nance. However, under normal operating cond i-tions, the starting motor should be disas sembled, inspected, cleaned and tested at time of engine overhaul.

9.3 Troubleshooting

Failure of the cranking motor to crank the engine at normal cranking speed may be due to a defe c-tive battery, worn battery cables, poor connections in the cranking circuit, defective engine starting switch, low temperature, condition of the engine or a defective cranking motor. To determine if the cranking motor is the problem, it will first be necessary to check the batteries, the cranking circuit, the magnetic switch, the solenoid and the control switch.

To obtain full performance data on a starting motor, or to determine the cause of abnormal operation, the starting motor should be subjected to the following tests. These tests are performed with the starting motor removed from the engine. Check the armature for freedom of rotation by prying on the pinion with a screwdriver. Tight bearings, a bent armature shaft, or a loose pole shoe screw will prevent the armature from turning freely. Failure of the starting motor to perform according to specifications will require disassembly of the motor for further checks and adjustments. However, if the armature does rotate freely, the motor should be given a no -load test before disassembly.

Caution: *Never operate the starting motor more than 30 seconds at a time without pausing to allow it to cool for at least 2 minutes. Overheating, caused by excessive starting, will seriously damage the starting motor.*

9.3.1 No-Load Test

Before disassembly of the starting motor, the following check of starting motor operation should be done to determine any condition which may require special attention during overhaul. Make test connections to the starting motor as in figure 38.

Connect the starting motor in series with fully charged batteries to give 24 volts, an ammeter capable of reading several hundred amperes, and a variable resistance. Also connect a voltmeter as illustrated in figure 38 from the solenoid motor (M) terminal to the starter frame. An rpm indicator is necessary to measure armature speed. Proper voltage can be obtained by varying the resistance unit.

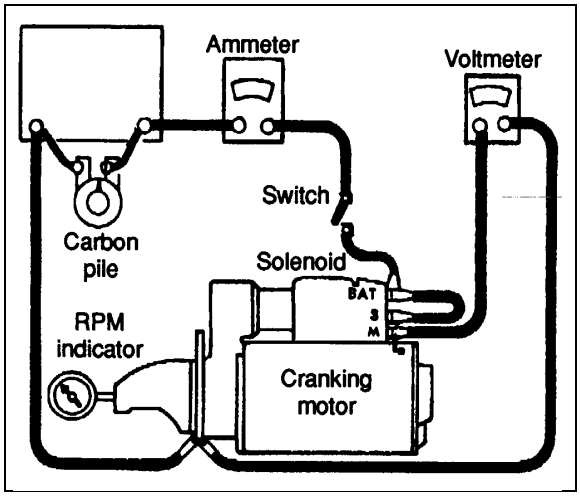

FIGURE 38: STARTING MOTOR TEST CONNECTIONS

06084

No-load test results

1. Rated current draw and no-load speed indicate normal condition of the starting motor.

2. Low free-speed and high current draw indicate the following:

   a) Excessive friction. Tight, dirty, or worn bearings, bent armature shaft, or loose pole shoes allowing the armature to drag.

   b) Shorted armature. This can be further checked on a growler after disassembly of the starting motor.

   c) Grounded armature or fields. Check again after disassembly.

3. Failure of the starting motor to operate with high current draw indicates the following:

   a) A direct ground in the terminal or fields.

   b) *"Frozen"* bearings. This should have been determined by turning the armature by hand.

4. Failure to operate with no current draw indicates:

   a) Open field circuit. This can be checked after starting motor disassembly by inspecting internal connections and tracing circuit with a test lamp.

   b) Open armature coils. Inspect the commutator for badly burned bars after disassembly.

   c) Broken brush springs, worn brushes, high insulation between the commutator bars or other causes which would prevent good contact between the brushes and commutator.

5. Low no-load speed and low current draw indicate high internal resistance due to poor connections, defective leads, dirty commutator and causes listed previously in step 4.
6. High free-speed and high current draw indicate shorted fields. If shorted fields are suspected, replace the field coil assembly and check for improved performance.

9.3.2 Lock-Torque Test

A variable resistance with a high current capacity should be used. The starting motor should be **securely** mounted and a brake arm hooked to the drive pinion. When specified current is applied, the torque can be computed from the reading on the scale. A one foot brake arm will directly indicate foot-pounds.

Warning: *This test requires extreme caution. Follow instructions carefully.*

9.4 Disassembly and Reassembly

9.4.1 Disassembly

Normally, the starting motor should be disassembled only far enough to make repairs or to replace the defective parts. As a precaution, it is suggested that safety glasses be worn when disassembling or assembling the cranking motor. Proceed as follows:

1. Note the relative position of the solenoid, lever housing, and nose housing so the motor can be reassembled in the same manner.
2. Disconnect field coil from the solenoid motor terminal, and lead from the solenoid ground terminal.
3. On motors with brush inspection plugs, remove the plugs and then remove the brush lead screws. This will disconnect the field leads from the brush holders.
4. Remove the attaching bolts and separate the commutator end frame from the field frame.
5. Separate the nose housing and field frame from the lever housing by removing attaching bolts.
6. Remove armature and clutch assembly from lever housing.
7. Separate solenoid from the lever housing by pulling apart.

9.4.2 Cleaning

The driving mechanism armature and fields should not be cleaned in a degreasing tank, or with grease dissolving solvents, since these would dissolve the lubricants in the drive mechanism and damage the insulation in the armature and field coils. All parts, except the drive, should be cleaned with mineral spirits and a brush. The drive can be wiped with a clean cloth.

If the commutator is dirty, it may be cleaned with No. 00 sandpaper.

Caution: Never use emery cloth to clean commutator.

9.4.3 Armature Servicing

If the armature commutator is worn, dirty, out of round, or has high insulation, the armature should be put in a lathe so the commutator can be turned down. The insulation should then be cut 1/32" (0,79 mm) wide and 1/32" (0,79 mm) deep, and the slots cleaned out to remove any trace of dirt or copper dust. As a final step in this procedure, the commutators should be sanded lightly with No. 00 sandpaper to remove any burrs left as a result of the undercutting procedures.

The armature should be checked for opens, short circuits and grounds as follows:

Open Circuit Test

Open circuits are usually caused by excessively long starting periods. The most likely place for an open circuit to occur is at the commutator riser bars. Inspect the points where the conductors are joined to the commutator bars for loose connections. The poor connections cause arcing and burning of the commutator bars as the starting motor is used. If the bars are not too badly burned, repair can often be performed by resoldering the leads in the riser bars (using rosin flux), and turning down the commutator in a lathe to remove the burned material. The insulation should then be undercut.

Caution: *Do not undercut the insulation between the commutator segments after turning down the commutator.*

Short Circuit Test

Short circuits in the armature are located by means of a growler. When the armature is revolved in the growler with a steel strip such as a

hacksaw blade held above it, the blade will vibrate above the area of the armature core in which the short circuit is located. Short circuits between bars are sometimes produced by brush dust or copper between the bars. These short circuits can be eliminated by cleaning out the slots.

Ground Test

Grounds in the armature can be detected by the use of a 110 volt test lamp and test points. If the lamp lights when one test point is placed on the commutator with the other point on the core or shaft, the armature is grounded. Grounds occur as a result of insulation failure, which is often brought about by overheating of the starting motor produced by excessively long starting periods, or by accumulation of brush dust between the co m-mutator bars and the steel commutator ring.

9.4.4 Field Coil Checks

The field coils may be checked for grounds and opens by using a test lamp.

Grounds

If the motor has one or more coils normally co n-nected to ground, the ground connections must be disconnected during this check. Connect one lead of the 110 volt test lamp to the field frame and the other lead to the field connector. If the lamp lights, at least one field coil is grounded, and it must be repaired or replaced.

Opens

Connect test lamp leads to ends of field coils. If lamp does not light, the field coils are open.

9.4.5 Field Coil Removal

Field coils can be removed from the field frame assembly by using a pole shoe screwdriver. A pole shoe spreader should also be used to prevent distortion of the field frame. Careful installation of the field coils is necessary to prevent shorting or grounding of the field coils as the pole shoe is tightened into place. Where the pole shoe has a long lip on one side and a short lip on the other, the long lip should be assembled in the direction of armature rotation so it becomes the trailing (not leading) edge of the pole shoe.

9.4.6 Reassembly

Reassembly is the reverse of disassembly.

To reassemble the end frame with brushes onto the field frame, pull the armature out of the field frame just far enough to permit the brushes to be placed over the commutator. Then push the commutator end frame and the armature back against the field frame.

The recommended torque for the cross -slotted pole shoe screws is 25-35 ft•lbs (34-47 N•m).

9.5 Pinion Clearance

Pinion clearance should be checked after rea s-sembly of motor to ensure the clearance is within specifications. To check pinion clearance (starting motor off engine), first disconnect the motor field connector from the solenoid motor terminal. Connect 24 volt battery with the positive battery lead to the solenoid switch terminal (5), and the negative battery lead to the grounded (G) solenoid terminal. Momentarily flash a jumper lead from the solenoid motor terminal to the grounded (G) solenoid terminal. The pinion gear will now shift into cranking position and remain that way until the battery is disconnected. Push the pinion or drive back towards the commutator end to eliminate slack movement. Measure the distance between pinion and pinion stop. This should be 23/64" ± 1/32" (9,5 mm ± 0,79 mm). Pinion clearance is adjusted to these limits by turning the solenoid shaft nut after removing access plug in shift housing. See figure 39.

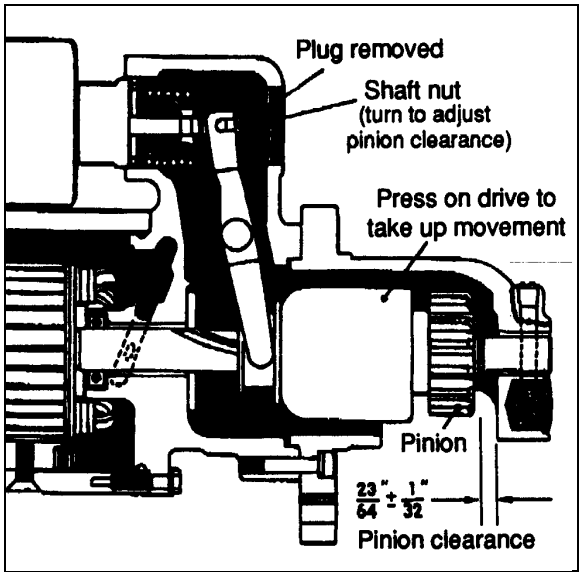

FIGURE 39: PINION CLEARANCE 06085

9.6 Starter Solenoid

9.6.1 Description

The starting motor solenoid allows the starting motor pinion to mesh with the flywheel ring gear and also closes the electric circuit to energize the starting motor.

There are two windings in the solenoid: a pull-in winding and a hold-in winding. Both windings are energized when the external control switch is closed. They produce a magnetic field which pulls the plunger in so that the drive pinion is allowed into mesh, and the main contacts in the solenoid switch are closed to connect the battery directly to the starting motor. Closing of the main switch contacts shorts out the pull-in winding since this winding is connected accross the main contacts. The magnetism produced by the hold-in winding is sufficient to hold the plunger in, and shorting out the pull-in winding reduces drain on the battery. When the control switch is opened momentarily, the pull-in winding and the hold-in winding are connected in series between the battery and common ground.

The polarity of the pull-in winding is reversed and opposes the magnetic pull of the hold-in winding. All magnetic holding force on the solenoid plunger is thus cancelled. The return spring then quickly pulls the solenoid plunger back, opening the solenoid switch contacts and withdrawing the pinion gear from the meshing position at the same time. Proper operation of the switch depends on maintaining a definite balance between the magnetic strength of the pull-in and hold-in windings.

This balance is established in the design by the size of wire and the number of turns specified. An open circuit in the hold-in winding or attempts to start the motor with a discharged battery may cause the switch to chatter.

9.6.2 Disassembly

To disassemble the solenoid, remove nuts washers, and insulators from the switch terminal and battery terminal. Unscrew cover screws and remove cover. Take out the contact disk assembly.

9.6.3 Solenoid Maintenance

The solenoid requires no periodic maintenance other than keeping the terminals clean and tight. Always check action of the solenoid if it has been removed. If the unit fails to function, first check wiring before condemning the solenoid. Solenoid windings can be checked for open or short circuit or current draw.

9.6.4 Solenoid Tests

Two tests must be done to determine the current draw of (1) both windings in parallel and (2) the hold-in winding alone. The solenoid windings can be tested with the solenoid either off or on the starting motor. However, when the solenoid is checked on the starting motor, it is necessary to disconnect both leads at the main solenoid terminals to prevent interference. The main solenoid terminal which is normally connected to the starting motor must then be grounded to the solenoid base by means of a jumper lead. For the first test, connect a source of variable voltage (battery and a variable resistance) in series with an ammeter between the solenoid base and the solenoid small switch terminal. Connect a voltmeter between the same two points. Slowly increase voltage and note the current draw. This should be 55-63 amps at 24 volts. Disconnect the jumper lead grounding the main solenoid terminal, and readjust the variable resistance to obtain the specified voltage of 24 volts. This should not exceed 6.8 amperes.

When the solenoid has been removed from the starting motor for repair or replacement, the linkage must be adjusted to provide the correct pinion clearance when the solenoid is remounted on the starting motor. See *"Starting motor"* earlier in this section for correct pinion clearance adjusment.

9.6.5 Recommendations

1. Tag each lead to ensure correct connections when the starting motor is reinstalled.
2. Tighten the 5/8"-11 starter attaching bolts to a torque of 137-147 lbf•ft (186-200 N•m).
3. Keep all the electrical connections clean and tight.
4. When installing wiring terminal leads to the starting motor and the solenoid switch, torque the No. 10-32 connections to 16-30 lbf•in (2-3 N•m) and the 1/2"-13 connections to 20-25 lbf•ft (27-34 N•m).

10. ENGINE BLOCK HEATER

An engine *"immersion-type"* block heater is installed as standard equipment. It consists of a 115 volt, 1500 watt, single loop element type, fitted at center of engine block (radiator side). It is plugged into a socket on the engine compartment rear door.

10.1 Maintenance

This heater is non-serviceable except for the cord, and if faulty, must be replaced as a unit.

11. EXTERIOR LIGHTING EQUIPMENT

The circuit for exterior lights, as well as their control switches, relays and circuit breakers are shown on the applicable wiring diagrams. Wiring diagrams are located in the technical publication box.

11.1 Headlights

Each headlight assembly consists of two 12 volt halogen rectangular sealed-beam units. Outer lamps are double-filament units, having high and low beams. Inner lamps have single-filament and operate with high beam of outer units. For identification purposes, outer units are molded with "2A1" and inner units are molded with "1A1" on top of the lens.

11.1.1 Headlight Dimmer Switch

The multifunction lever located on the steering column is used to select proper lighting. High beams or low beams can be selected by pushing the lever towards the dashboard (high) or pulling it towards the driver (low). A high beam indicator on the central dashboard panel is illuminated when the high beam circuit is energized.

Note: *High beams can be flashed momentarily by pulling the lever completely towards the driver and then releasing it.*

11.1.2 Maintenance

Clean headlights with soap and water and a good glass cleaner whenever dirty. For maximum illumination, headlight connections must be coated with a dielectric grease to prevent oxidation and proper voltage must be maintained. Low battery voltage, loose or dirty contacts in wiring system and poor ground contribute to a decrease in voltage. Check wiring and connections regularly and keep battery properly charged. When a headlight burns out, a new sealed-beam unit must be installed.

Headlights must be properly aimed to provide maximum allowable road illumination. When using mechanical aimers, follow manufacturer's instructions.

Headlight aim should be checked after installing a new sealed-beam unit. Aiming can be performed without removing headlight bezels. Horizontal and vertical aiming of each sealed-beam unit is provided by two adjusting screws which move the mounting ring in the body against the tension of the coil spring (Fig. 40). There is no adjustment for focus since the sealed-beam unit is set for proper focus during manufacturing assembly.

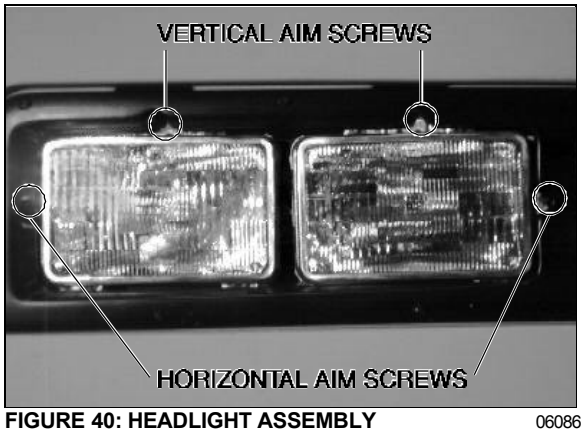

FIGURE 40: HEADLIGHT ASSEMBLY 06086

11.1.3 Headlight Adjustment

The following is a general procedure for headlight adjustment using a mechanical equipment, such as a *"Bear 47-132 headlight aligner"*. If your mechanical equipment is different, refer to the manufacturer's instruction manual.

Setting Aligner According to Slope

The floor level offset dial must match with slope to ensure a precise alignment.

1. Park vehicle on a level floor.
2. Fix one (1) calibration fixture to each aligner.
3. Install aligner in center of each wheel on one side of vehicle. Unit B must be installed beside the front axle wheel with its viewing port facing rearward, and unit A beside the drive axle wheel with its viewing port facing forward. See figure 41 for more details.

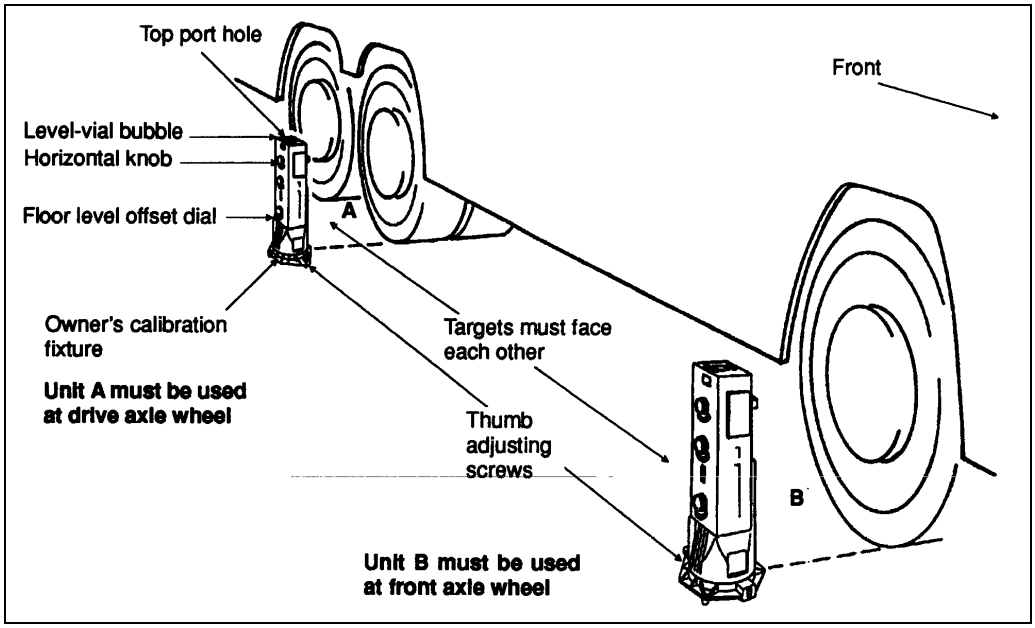

FIGURE 41: HEADLIGHT ALIGNER 06087

Note: *Check that the three indicators on each module are set to zero.*

4. Level each unit with the thumb adjusting screw on the fixture until level-vial bubble is centered.
5. Look through the top port hole of unit A, and turn horizontal knob until split images are aligned. See figure 42.

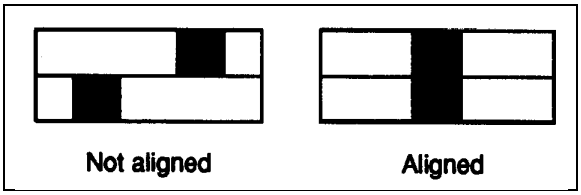

FIGURE 42: : HEADLIGHT ALIGNER 06088

6. Set according to floor slope. Transfer positive (+) or negative (-) reading of horizontal dial to the floor level offset dial to offset floor slope on each aligner (Fig. 43). Push on the floor level offset dial to register reading.
7. Remove calibration fixture from each unit.

Note: *If vehicle remains stationary during the headlight alignment procedure, avoid checking floor slope each time.*

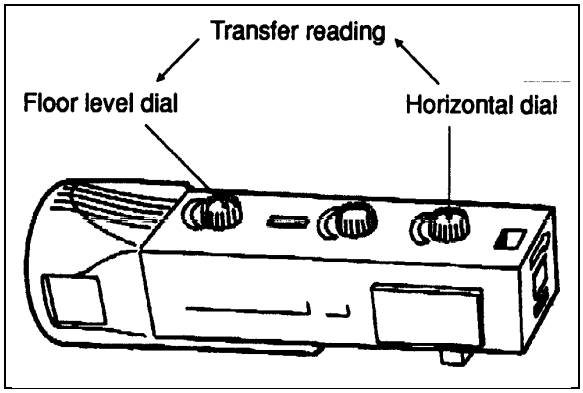

FIGURE 43: HEADLIGHT ALIGNER 06089

Headlight alignment

The aligner is provided with adaptors for different sizes of headlights which are always aligned in pairs.

1. Fix the adequate adaptor on each headlight.

Note: *The adaptors are equipped with steel inserts, thus providing a good seating for precise headlight adjustment.*

2. Install aligners on headlights (unit A on driver's side and unit B on other side with the sight openings facing each other) by pushing the handle forward to secure rubber suction disc. Pull handle until it locks. Refer to figure 44.

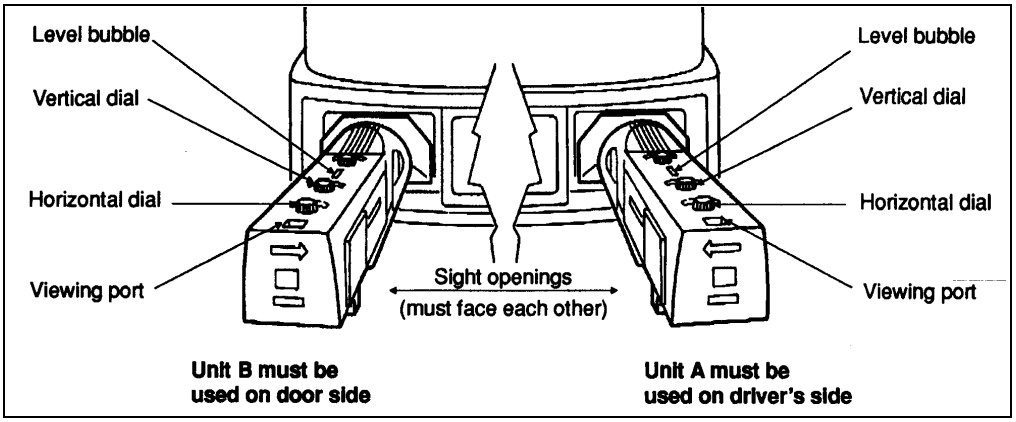

FIGURE 44: HEADLIGHT ALIGNER 06090

Note: *Ensure that floor level offset dial is set correctly before aligning headlights.*

Horizontal alignment

1. Reset horizontal dial to zero.
2. Check that split image i s visible in the viewing port. If not, replace aligner by turning it.
3. Turn the horizontal aim adjusting screw of each headlight until split image is aligned (Fig. 45).

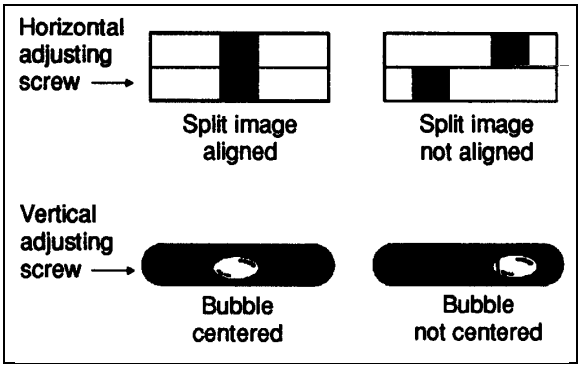

FIGURE 45: HEADLIGHT ALIGNER 06091

Vertical alignment

1. Reset vertical dial to zero.
2. Turn the adjusting screw of the headlight vertical aim until bubble is centered (Fig. 45). Repeat operation on other headlight.
3. Recheck the horizontal alignment.

Remove aligners by pressing on vacuum release button.

Repeat the same procedure for the high beams.

If proper mechanical equipment is not available, perform adjustments as described below:

1. Park vehicle on level floor so headlights are 25 feet (7,6 m) from a smooth surface preferably of light color. A door or wall is suitable. Center line of vehicle should be perpendicular to this vertical surface.
2. Draw a horizontal line on vertical surface at height of light center. Locate point on this hor i-zontal line at which projected centerline of veh i-cle intersects. Measure distance between light centers and divide this distance equally on either side of center mark. Then draw two vertical lines directly ahead of each light center.
3. Switch on high beams and cover one headlight while adjusting the other.
4. When aiming headlights, beam may appear distorted. A new sealed -beam unit must be i n-stalled to correct this condition.
5. After headlight is properly aligned, cover it and proceed in the same manner as above with the opposite headlight.

11.2 Sealed-Beam Unit Replacement

11.2.1 Removal

1. Remove screws attaching headlight bezel to front panel (10 *"Phillips"* screws) and remove bezel.
2. Remove four mounting screws attaching sealed-beam unit retaining ring to mounting ring.

Note: *Do not disrupt headlight screw adjus t-ment.*

3. Remove sealed-beam unit and pull wiring co n-nector off back of unit.

11.2.2 Replacement

1. Install wiring connector on back of sealed -beam unit. Position unit in mounting ring with molded lens number at top.

Note: *Sealed-beam units with number "1A1" molded, on top of the lens must be used at inside light positions. Units with number "2A1" molded, on top of the lens must be used at outside light positions.*

2. Position the retaining ring over the lens and secure it to the mounting ring with four screws.

Note: *The headlight aim must be checked and adjusted even if it was properly adjusted b e-fore the sealed -beam unit was replaced, and adjusting screws were not removed.*

3. After installing and adjusting the headlight assembly, install the headlight bezel.

11.3 Front Turn Signal

The front turn signal is a part of the front headlight cluster. The turn signal lens is located on each front corner and shares a common bezel with the headlights. Turn signal is visible from both front and side.

11.3.1 Bulb Removal and Replacement

1. Remove the ten *"Phillips"* screws attaching the headlight bezel, then remove headlight bezel.
2. Remove socket from headlight bezel.
3. Remove the bulb by pushing and rotating it out of the socket.
4. Install the new bulb by reversing the previous procedure.

11.4 Stop, Tail, Directional, Back-up, and Hazard Warning Lights

A combination stoplight, taillight, directional signal light and back-up light assembly is mounted at the rear, on each side of the vehicle. Furthermore, when braking, a center stoplight will illuminate simultaneously with the stoplights on the sides for increased safety.

The stop, tail, directional signal and back -up lights consist of individual bulbs mounted in a common housing, and each light is serviced individually as a complete unit and need only to be plugged into or unplugged from socket after removing proper light lens.

The hazard warning flashing system uses the front, side, and rear directional lights simultan e-ously. This system is energized by a switch on the L.H. dashboard.

11.4.1 Bulb Removal and Replacement

1. Unscrew the retaining lens screws (2), then remove the lens.
2. Remove the bulb by pushing and then rotating it counterclockwise out of the socket.
3. Install the new bulb by pushing and rotating it clockwise, then replace the lens; the *"Hella"* inscription molded on the lens must be pointing upwards.

Note: *Taillights are provided with a different candle power bulb. Make sure appropriate replacements are used for any defective bulbs.*

11.5 License Plate Light

Two sealed units are mounted above the rear license plate(s) of vehicle. In case of burn out, the sealed unit must be changed according to the following procedure.

1. Pry out the rubber seal with a small scre w-driver. Pull on the sealed unit and disconnect it.
2. Reconnect new sealed unit, place rubber seal, and press on it until it is seated in its former position.

11.6 Clearance, Identification and Marker Lights

This vehicle is equipped with marker, identification and clearance lights. The clearance lights are mounted at each corner of the coach near the top and the identification lights are in the upper center of rear and front sections. The rear clearance lights are red and the front ones are yellow.

The yellow marker lights are mounted on the sides of vehicle.

11.6.1 Marker Light Bulb Removal and Replacement

The side marker light is a sealed unit and should be replaced as an assembly in accordance with the following procedure:

1. Unscrew both *"Phillips"* light screws, then remove the light assembly.
2. Pull the connector to remove it from its socket.
3. Push the connector on the new light unit.
4. Position light assembly and install the *"Phillips"* screws.

11.6.2 Clearance and Identification Light Bulb Removal and Replacement

The clearance and identification light bulb can be replaced in accordance with the following procedure:

1. Unscrew both *"Phillips"* lens screws, then remove the lens and housing.
2. Twist the bulb socket and pull out.
3. Pull the bulb straight out to remove it from its socket. Do not try to turn the bulb to remove it.
4. Install the new bulb by pushing it into the socket.
5. Position lens on housing, then install the *"Phillips"* screws.

11.7 Docking and Cornering Lights

This vehicle is provided with two halogen headlights that serve as cornering lights. They are mounted on the vehicle as follows: one is mounted on the front L.H. side service compartment door, while the other is located between the front wheel and the entrance door on the R.H. side. The main function of these lights is to increase lateral visibility when turning a corner. These lights are energized simultaneously with the directional lights. On the V.I.P. model, a dashboard-mounted rocker switch may be actuated to cancel this system in special situations.

Two additional halogen headlights are installed on rear electrical compartment doors. These lights are used as docking lights and both will illuminate automatically when reverse range is selected to facilitate back-up or docking procedure.

On the V.I.P. model, these lights do not operate automatically when the reverse range is selected, but by means of a dashboard-mounted rocker switch. When actuated, the docking as well as the cornering lights illuminate. Furthermore, a *"Low docking"* switch, also located on dashboard, allows the use of the docking and cornering lights at a lower intensity when the docking switch is actuated.

11.7.1 Bulb Removal and Replacement

Both docking and cornering headlights can be changed in accordance with the following procedure:

1. Remove the two *"Phillips"* screws attaching the retaining ring.
2. Disconnect the light unit connection.
3. Press on each tab of retaining clip, bring both tabs together, then lift the retaining clip.
4. Remove the bulb.
5. Position new bulb, install the retaining clip, then bring both tabs together. When the retaining clip is in position, release the tabs.

Caution: *During this step, avoid contacting the bulb with your fingers. This could alter the bulb life.*

6. Connect and position the light unit.
7. Finally, install the retaining ring.

11.8 Fog Lights

Optional halogen fog lights can be mounted on this vehicle to give the driver better visibility in foggy weather, or to improve the range of vision just ahead of the coach.

11.8.1 Bulb Removal and Replacement

1. Remove the protector cap on light unit (if so equipped). Remove the light unit retainer screw and slide the retainer upward.
2. Remove the light unit. Disconnect the light unit connection.
3. Remove retaining clip from its notches, then lift the retaining clip and remove the bulb.
4. Install the new bulb, then replace the retaining tab of clip to its position into the notches.

Caution: *During this step, avoid contacting the bulb with your fingers. This could alter the bulb life.*

5. Reconnect the light un it and replace in its proper position.
6. Replace the retainer.
7. Replace the light unit cover (if so equipped).

12. INTERIOR LIGHTING EQUIPMENT

12.1 Control Panel Lighting

The instrument gauges and switches mounted on all control panels are energized whenever the exterior light switch is pushed to the first position. A control dimmer at the extremity of the L.H. side control panel is used to vary the brightness of the panel gauges, switches and indicator lights.

The gauge lights, panel lights, switch lights and indicator lights have a different bulb arrangement. Thus, the procedure to change a defective bulb can vary according to the application.

12.1.1 Switch Bulb Replacement

1. Slightly pull the switch with a defective bulb away from the control panel.
2. Using a small screwdriver, press the tab on top of the switch housing. Pull the switch away from the control panel.
3. Using the same screwdriver, press on the light bulb housing tab in order to remove it from the switch.
4. The light bulb may be r emoved by pulling it away.
5. Install the new bulb by pushing it into the socket.
6. Install the light socket in its former position.
7. Replace the switch on control panel.

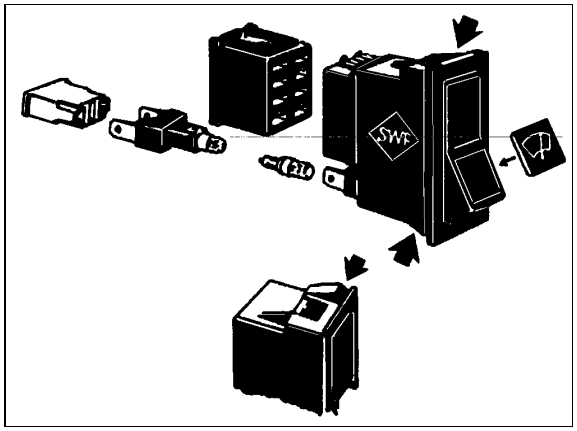

FIGURE 46: SWITCH 06092

12.1.2 Indicator Light Bulb Replacement

1. Remove dashboard housing by removing the two screws (one on each side of the das h-board).
2. Locate the defective light.
3. Access bulb by pulling out socket while appl y-ing lateral pressure.
4. Pull defective bulb out of socket and replace with a new one.
5. Replace socket in light housing.
6. Replace dashboard housing.

Note: *The bulbs of the "Check engine" and "Stop engine" warning lights, as well as those for the flasher indicator lights, are 12 volts instead of 24 volts, as in the case of all other indicator/warning lights.*

12.1.3 Gauge Light Bulb Replacement

1. For any gauge light bulb replacement, the rear dashboard housing must be removed in order to have access to the rear of gauges.
2. Remove bulb socket from the gauge, turn the defective bulb counterclockwise and pull it out of the socket.
3. Push a new bulb into the socket and turn clockwise to lock in place.
4. Replace bulb socket in gauge and replace the rear dashboard housing.

12.1.4 Panel Light Bulb Replacement

Panel light bulbs are mounted in sockets under the dashboard panel and serve to illuminate control switches such as the heating and A/C switches.

1. To replace a panel light bulb, the rear dashboard housing must be removed.
2. Push and turn the bulb counterclockwise and pull it out of the socket.
3. Install the new bulb in the socket. Push and turn clockwise to lock in position.
4. Replace the rear dashboard housing.

12.2 Stepwell Lights and Lavatory Night-Light

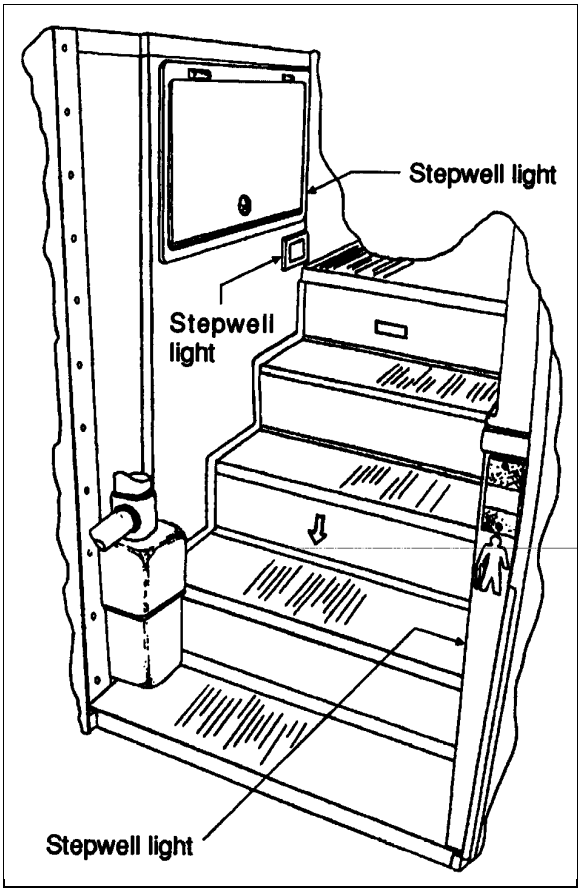

FIGURE 47: STEPWELL 06094

Stepwell lights are illuminated when the door opening system is activated (Fig. 47).

The lavatory night-light is illuminated as soon as the ignition switch is set to the *"ON"* position.

12.2.1 Bulb Removal and Replacement

Proceed as follows to replace defective bulb:

1. Unscrew the two Phillips -head screws retaining the lens to the lavatory wall, and remove it.
2. With the light lens removed, pull bulb from the lamp while applying lateral pressure.
3. Install the new bulb into the lamp.
4. Position the light lens and install it.

12.3 Dome Lights

Two dome lights (each provided with two bulbs) are installed over the stepwell and the driver's compartment. These lights are frequently used for nighttime operation when passengers board or leave coach.

12.3.1 Bulb Removal and Replacement

1. Unsnap the lens with a flat head screwdriver and remove it.
2. Push and turn the defective bulb countercloc k-wise, then pull it out of the socket.
3. Install the new bulb by pushing and turning clockwise until it locks in position.
4. Replace the lens and snap it back in place.

12.4 Passenger Section Lighting

The passenger section of vehicle is lit by two types of fluorescent tube lamps installed on parcel racks.

The aisle bulb lights are located on front of parcel racks, while fluorescent lights for general and in-station lighting are located under the parcel racks. A dual power system is available for this lighting either from the 24 volt vehicle power supply or from a 110 volt outlet supply. In order to save batteries during extended periods of in-station lighting, no current is drawn from the batteries as soon as the 110 volt circuit is co n-nected.

Moreover, adjustable reading lamps are installed under parcel racks for passenger accomodation.

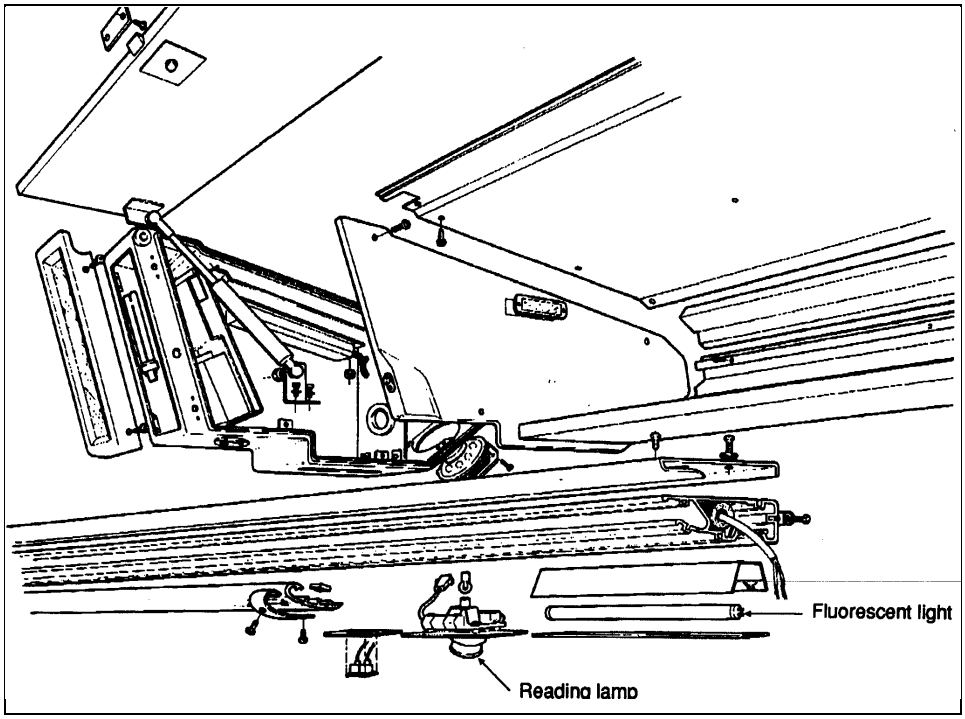

FIGURE 48: PARCEL RACK 06095

12.4.1 Removal and Replacement of Aisle Fluorescent Light

1. Remove the front bezel by unscrewing the four *"Phillips"* side screws (two each side), then the lens (Fig. 48).
2. Pull the fluorescent light out of its base.
3. Install a new fluorescent light and push in until the proper position is reached.
4. Replace lens bezel.

12.4.2 Removal and Replacement of Fluorescent Light

1. Apply pressure on the screen lens of fluore s-cent light to unsnap it (Fig. 48).
2. Rotate and pull the fluorescent light from its socket.
3. Install the new fluorescent tube, ro tating the tube to secure it in its socket.

12.4.3 Removal and Replacement of Reading Lamp Bulb

1. Slide the reading lamp slightly and pull in order to unsnap it.
2. Turn over the reading lamp and unscrew both screws of the retaining socket support.
3. Push and turn bulb counterclockwise, then pull it out of the socket.
4. Install new bulb in the socket, then push and turn clockwise to lock bulb in position.
5. Install retaining socket support and screw.
6. Position the reading lamp and press until it snaps.

12.5 Engine Compartment Lighting

Three engine compartment lights controlled by a microswitch upon opening of the engine door, are provided in the engine compartment; two are circular while the other is the same sealed unit as used to illuminate the license plate.

12.5.1 Circular Light

Each light is provided with one bulb which can be replaced as follows:

1. Remove the lens by prying out with a flat screwdriver.
2. Push and turn the defective bulb counterclockwise, then pull it out of the socket.
3. Install the new bulb in the socket, then push and turn clockwise to lock bulb in position.
4. Install the lens, and snap it in place.

12.5.2 Sealed Unit Light

In case of burn out, the sealed unit must be changed in accordance with the following procedure:

1. Pry the sealed unit out of its receptacle fixture by inserting a small flat screwdriver at one extremity, then pull on the sealed unit and disconnect it.
2. Reconnect new sealed unit, and press on it until it is seated in its former position.

12.6 Lavatory Light

The lavatory light is installed on ceiling and is provided with two fluorescent tubes. A microswitch, which is mounted in the door exterior frame, is activated by the door lock mechanism upon locking to energize the circuit. This switch is readily serviced by removing the two Phillips-head screws securing the mounting plate to the door exterior frame.

Proceed as follows to replace a fluorescent tube:

1. Press in side of lens (mirror side), free lens from its retaining groove, slide out other side, then remove lens.
2. Unsnap defective fluorescent tube by pushing both extremities simultaneously against felt discs.
3. Holding the fluorescent with one hand, push one of the pin receptacle steel plates inwards to free tube extremity, then remove tube from its fixture.
4. Reverse above procedure to install new fluorescent tube.

   If ballast is defective or a wire feed voltage check is required, ballast cover may be removed by performing the previous first three steps and the following:

Warning: *Be careful when checking the ballast feed voltage as its output voltage is 600 volts.*

a. Grasp and press both cover extremities inwards to free edges from the four rivets.
b. Reverse previous steps to install cover, fluorescent tubes and lens.

13. LIGHT BULB DATA

When replacing a light bulb, special attention must be paid to the voltage rating (refer to light bulb data hereafter).

Note: *All exterior lights are 12 volts and all interior lights are 24 volts, except for the "Check engine" and "Stop engine" warning lights and flasher indicator lights which are also on 12 volt system.*

Application	Prévost part no.	Trade or SAE Number	Watts or Candle Power	Volts	Qty
EXTERIOR LIGHTING					
Hi-beam	561198	H4651	50 W	12	2
Low-beam	561199	H4656	35 W	12	2
Docking & cornering	561882	H3 (Osram)	55 W	12	4
Fog	561882	H3 (Osram)	55 W	12	2
License plate (sealed)	930266	---	---	12	2
Side directional	930301	Sealed	2 cp	12	6
Side marker	930304 930301	Sealed Sealed	2 cp 2 cp	12 12	2 4
Identification	562059	194	2 cp	12	6
Clearance	562059	194	2 cp	12	8
Front directional (hazard and marker)	561899	1157 NA	32/6 cp	12	2
Rear directional	561880	Hella	21 W	12	4
Stop	561880	Hella	21 W	12	4
Back-up	561880	Hella	21 W	12	4
Center stop	561880	Hella	21 W	12	1
Tail	561881	Hella	10 W	12	4
Exterior compartment (except engine)	562278	6429 (78207)	10 W	24	A\R
Engine compartment	561917 930209	1683 ---	32 cp ---	24 24	2 1

INTERIOR LIGHTING					
Check engine	562048	E-9 (Norma)	2 W	12	1
Stop engine	562048	E-9 (Norma)	2 W	12	1
Flasher indicator	562048	E-9 (Norma)	2 W	12	2
Other indicator (1/unit)	562049	(Osram)	2 W	24	A\R
Speedometer	560145	1829	1 cp	24	2
Tachometer	560145	1829	1 cp	24	2
Turbo boost	561167	3899 (Osram)	3 W	24	1
Tachograph	561006	1-405-804	1.2 cp	24	3
Other instrument (1/unit)	560144	1820	1.6 cp	24	A\R
Step	562278	6429	10 W	24	3
Lavatory	562278	6429	10 W	24	1
Parcel rack	560144	1820	1.6 cp	24	A\R
Driver's area	561553	78236	10 W	24	4
"EMERGENCY EXIT" decal	560601	456	2 cp	24	20
"LAVATORY OCCUPIED"	560144	1820	1.6 cp	24	2
"WATCH YOUR STEP"	560144	1820	1.6 cp	24	2
Aisle	560141	1251	3 cp	24	6
Switch (1/unit)	561123	2741 (Osram)	1 W	24	A\R
Reading	562033	961-4940	8 W	24	A\R
Fluorescent	830102	F15T8CW	15 W	---	A\R
Lavatory fluorescent	830102	F15T8CW	15 W	---	2
Destination sign fluorescent	830080	F30T8CW4	20 W	---	1
Parcel rack front neon	830108	PL7	7 W	---	A\R
R.H. lateral console	562278	6429 (78207)	10 W	24	1

14. TACHOGRAPH PROGRAMMING INSTRUCTIONS

WITH SERIES 60 DETROIT DIESEL ENGINE / DDEC III

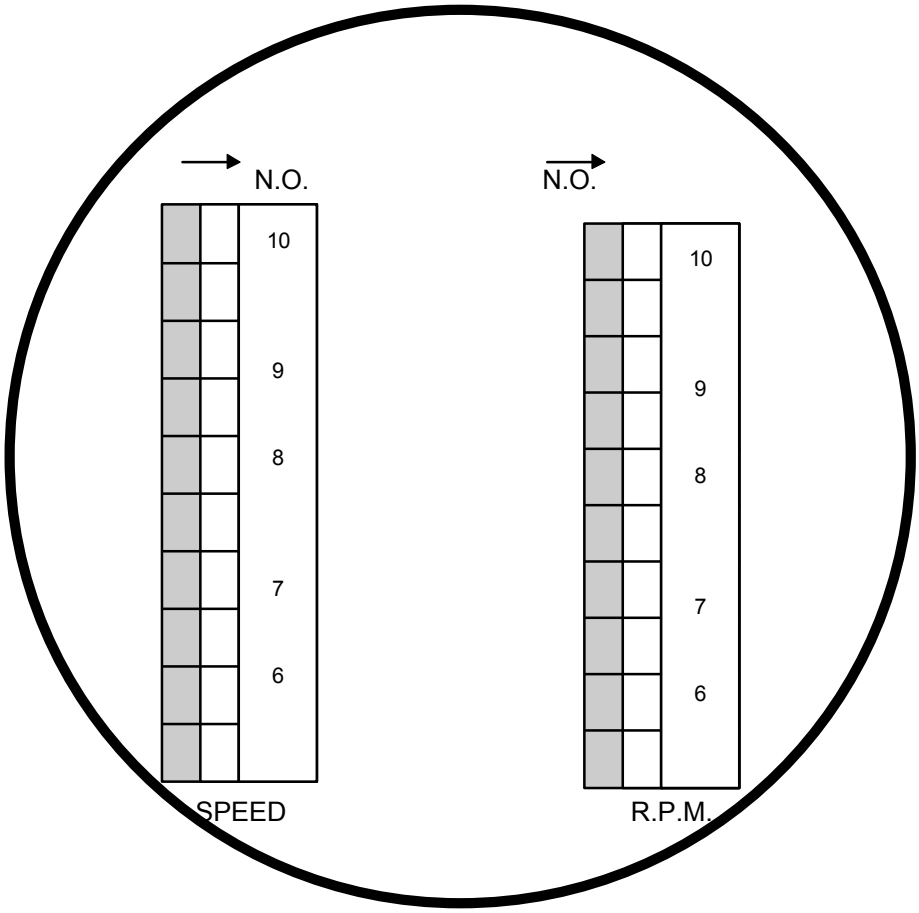

TACHOGRAPH REAR VIEW

SPEED PROGRAMMING CHART (SWITCHES SHOULD BE ACTIVATED TO N.O)												
TRANSMISSION	**SPEED**	**DIFF. RATIO**	**SWITCHES**									
WORLD TRANS.	MPH	4.56	1	2		4	5	6				
		4.88	1	2	3		5	6				
	KMH	4.56	1	2	3	4	5		7			
		4.88	1			4	5		7			
MANUAL TRANS.	MPH	3.07	1	2	3		5		7			
		3.21	1	2			5		7			
	KMH	3.07	1		3	4				8		
		3.21	1	2	3					8		

RPM PROGRAMMING CHART (SWITCHES SHOULD BE ACTIVATED TO N.O)										
	SWITCHES									
ALL DDEC III ENGINES	1	2	3	4		6		8		

15. SPECIFICATIONS

Battery

Make..... Delco-Remy
Model..... 1150
Type ..... Maintenance-free
Terminal type.....Top Stud
Group size.....31
Volts 12
Load test amperage*.....290
Reserve capacity (minutes) 180

Cold cranking (in amps)
- At 0 °F (-18 °C) ..... 625 (each battery)
- At -20 °F (-29 °C) ..... 490 (each battery)

Maximum dimensions (inches/mm)
- Length (including flange) 13.0/330,2
- Width 6.8/172,7
- Height (including top posts) 9.4/238,8
- Approximate weight (lbs/kg) 60/27,2

* *Battery tester cable clamps should be between terminal nuts and lead pads of terminals. If not possible, load value should be 210 amperes.*

Torque specifications

Battery cable to post ..... 10-15 lbf·ft (13-20 N·m)
Battery cover..... 45-50 lbf·ft (5-6 N·m)

Electrical system monitor

Make.....Vanner
Model.....EM-70
Input ..... 24 V dc
System high ..... Greater than 30 V dc
System low.....Less than 24 V dc
Trip level ..... ± 0.75 V dc
Prévost Number..... 562058

Alternator

Make..... Delco-Remy
Model Number.....1117702
Series ..... 50 DN
Type 600

Field current at 80 °F (27 °C)
- Amperes .....7.2 - 8.0
- Volts 24

Hot output
- Amperes .....270 at 80 °F (27 °C) ambient
- Volts 28
- Approximate rpm 3000

Ground..... Negative
Prévost Number..... 561723

Regulator

Make .....Delco-Remy
Model Number 1118447
Type ..... Transistor
Voltage adjustment..... External screw
Prévost Number 560030

Battery equalizer

Make ..... Vanner
Model 60-50A
Amperes..... 50 amps
Prévost Number 561016

Battery equalizer

Make ..... Vanner
Model 60-100D
Amperes..... 100 amps
Prévost Number 562542

Starting motor

Make .....Delco-Remy
Model Number 1990269
Series..... 50 MT
Type..... 400
Rotation (viewing drive end) ..... CW
Brush tension..... 5 lbs (2,2 kg) Min.
Voltage 24

No-load test
- Volts..... 23
- Min. current draw ..... 60 amperes
- Max. current draw ..... 90 amperes
- Min. rpm .....7000 rpm

Starting motor solenoid

Make .....Delco-Remy
Model Number 1115557

Current Draw 80 °F (27 °C)
- Hold-in winding..... 7.35 - 8.2 amps
- Pull-in winding ..... 48 - 54.5 amps

Volts..... 24

WANNER

Battery Equalizers

OWNERS MANUAL

***Volt/Waster* Battery Equalizer**

Models 60-1OB, 60-20A and 60-50A



Model 60-50A

Table of Contents

Introduction	2
General Description	2
Specifications	3
Theory of Operation	4
Applications	5
Operation	7
Installation Instructions	7
Service and Troubleshooting	9
Warranty	12

INTRODUCTION

Thank you for purchasing a Vanner *VoltMaster* Battery Equalizer. We are confident that you will be very pleased with its performance because our Battery Equalizers are designed and manufactured by skilled professionals using the highest standards in workmanship. With minimum maintenance and care, you can be assured of many years of trouble free service.

GENERAL DESCRIPTION

The Vanner *VoltMaster* Battery Equalizer is an efficient and highly reliable method of obtaining a 12 volt DC power source from a 24 volt DC electrical system. In addition to providing regulated 12 volt power, the system provides battery equalization which significantly extends battery life. Ideally suited for vehicle and alternate energy applications, the *VoltMaster* Battery Equalizer is designed to save your batteries and the money you would spend replacing them. Users of the Vanner *VoltMaster* Battery Equalizer know that it is the most cost effective and dependable solution for dual voltage systems.

Atypical system would include a DC power source, such as an alternator or solar panels, two 12 volt battery banks in series, and the *VoltMaster* Battery Equalizer. The Battery Equalizer connects to the 24 volt, 12 volt and ground terminals of the battery system. When the 12 volt loads require power, the Battery Equalizer ensures that the current is taken equally from both batteries, and that the voltages of the two batteries are kept equal. This equalization ensures extended battery life and provides a stable 12 volt supply for operating accessories.

Models are available which provide 10,20 and 50 amps of 12 volt DC power. *VoltMaster* Battery Equalizers may be connected in parallel to provide more power. For example, two 50 amp units can be installed in parallel to provide 100 amps of 12 volt DC power. All models are enclosed in an anodized enclosure to provide protection from the environment, and are current limited to protect against short circuits.

Specifications

	Model 6O-1OB	Model 60-50A	Model 60-50A
Input Voltage:	20 to 35 VDC	20 to 35 VDC	20 to 35 VDC
Maximum Input Current (24 VDC):	6.5 amps	13.0 amps	30.0 amps
Output Voltage:	([Input Voltage/2] ±2%] - 50 mv		
Output Current (12 VDC):	O to 10 amps depending on load requirements. Electronically current limited to 10 amps and completely short circuit proof.	0 to 20 amps depending on load requirements. Electronically current limited to 20 amps and completely short circuit proof	O to 50 amps depending on load requirements. Electronically current limited to 50 amps and completely short circuit proof.
Operating Temperature:	-40C to +71C	-40C to +71C	-40C to +71C
Standby Mode Current:	14 milliamps	14 milliamps	14 milliamps
Storage Temperature:	-54C to +85C	-54 C to +85C	-54 C to +85C

Environmental Considerations: Anodized aluminum enclosure provides protection against salt, fungus, dust, water, fuel vapors and all fluids associated with commercial and off-highway vehicle operations. Limited exposure to splashes and spills is allowed but continuous exposure should be avoided.

Mounting Location: Mounting location should be a flat surface close to the batteries to allow short battery cable runs. The location should be protected from as much adverse environmental conditions as possible including batter fumes. Vertical mounting with terminals down is recommended.

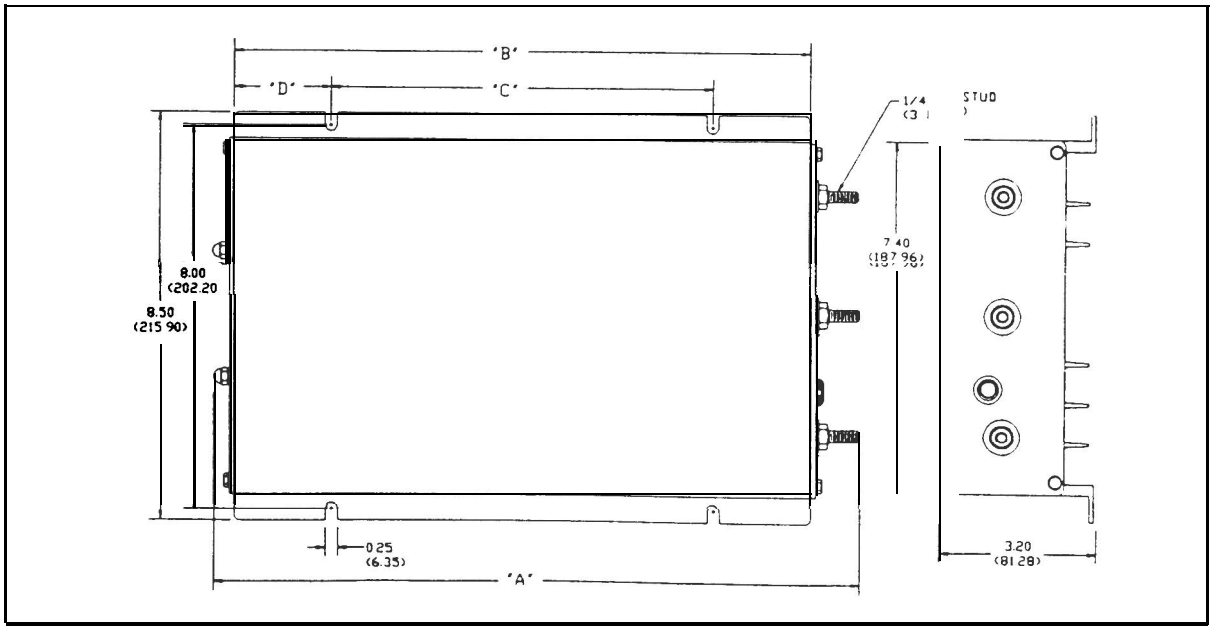

	Dimensions - Inches (mm)				Weight
Model	"A"	"B"	"C"	"D"	lbs (kg)
60-1OB	4.25 (107.9)	3.00 (76.30)	2.00 (50.80)	0.50 (12.7)	2.7 (1.2)
60-20A	9.38 (238.2)	8.00 (203.2)	4.50 (114.3)	1.75 (44.4)	5.6 (2.5)
65-50A	13.38 (339.8)	12.00 (304.8)	8.00 (203.2)	2.00 (50.8)	7.7 (3.5)

Theory of Operation

Typical 24/12 VDC System

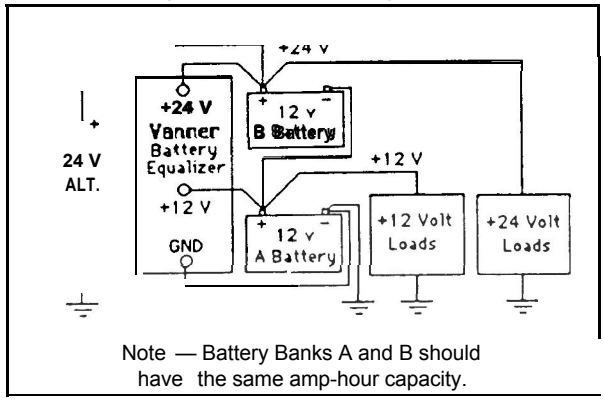

Note — Battery Banks A and B should have the same amp-hour capacity.

In many 24 volt electrical systems it is desirable to tap into the battery system to obtain power for 12 volt loads. This method, while seemingly simple, causes a charge imbalance resulting in Battery B (see diagram) being overcharged, and possibly boiling, while Battery A discharges.

To solve this application problem the Vanner *VoltMaster* Battery Equalizer is connected to the battery system at the +24 volt, +12 volt, and ground points. The Battery Equalizer maintains the voltage balance and charge acceptance rate of each battery to within 0.1 volts under light loads and to within 0.5 volts at full load. When the voltage of Battery A is higher than or equal to that of Battery B the Battery Equalizer is in the standby mode, i.e, it is not transferring power from its 24 volt input to its 12 volt output, When a 12 volt load is present, and Battery A's voltage decreases to just below the voltage of Battery B, the Battery Equalizer activates and transfers sufficient current from Battery B to Battery A to satisfy the load and maintain an equal voltage and charge in both batteries.

A key advantage of the *VoltMaster* Battery Equalizer, when compared to DC converters, is that voltMaster's unique system design enables it to sustain momentary current surges in excess of its rated capacity. If the 12 volt load requires a momentary surge in current, the *VoltMaster* will permit that extra current to be drawn from Battery A. The Battery Equalizer will then replenish the energy to Battery A after the surge has passed.

The following scenarios describe the ***VoltMaster*** Battery Equalizer's operation within a typical system.

Scenario #1 - 24 volt load present, no 12 volt load present. The system operates as it would without the Battery Equalizer whether the alternator is on or not. The Battery Equalizer is in the standby mode except for making small adjustments to keep the batteries in balance.

Scenario #2 - Both 24 volt 12 volt loads present, alternator is off. The Battery Equalizer will ensure that both batteries discharge at the same rate even if different loads are present.

Scenario#3 - Both 24 volt and 12 volt loads present, alternator is on. The alternator provides 24 volt power to the battery system and to the 24 volt loads. The Battery Equalizer transfers power from the 24 volt source to the 12' volt-load by converting 24 volt power to 12 volts. It will supply sufficient 12 volt power to satisfy the 12 volt load and maintain the voltage balance between both batteries.

Applications

Vanner VoltMaster Battery Equalizers are used in many types of applications including transit and tour buses, private coaches, heavy trucks and off highway equipment, yachts, and alternative energy systems such as solar powered homes. In addition to Battery Equalizers, Vanner manufactures a wide range of complementary products such as DC to DC converters, DC to AC inverters, battery charger/conditioners, and battery isolators. The following system diagrams illustrate how these products are used in various applications.

PRIVATE COACH

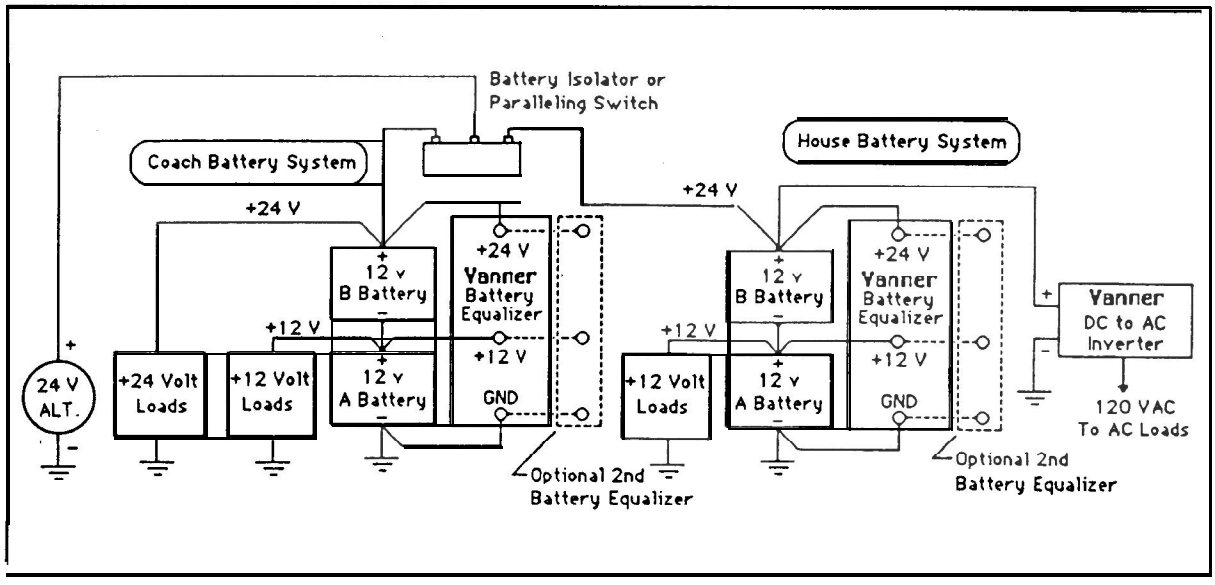

MARINE

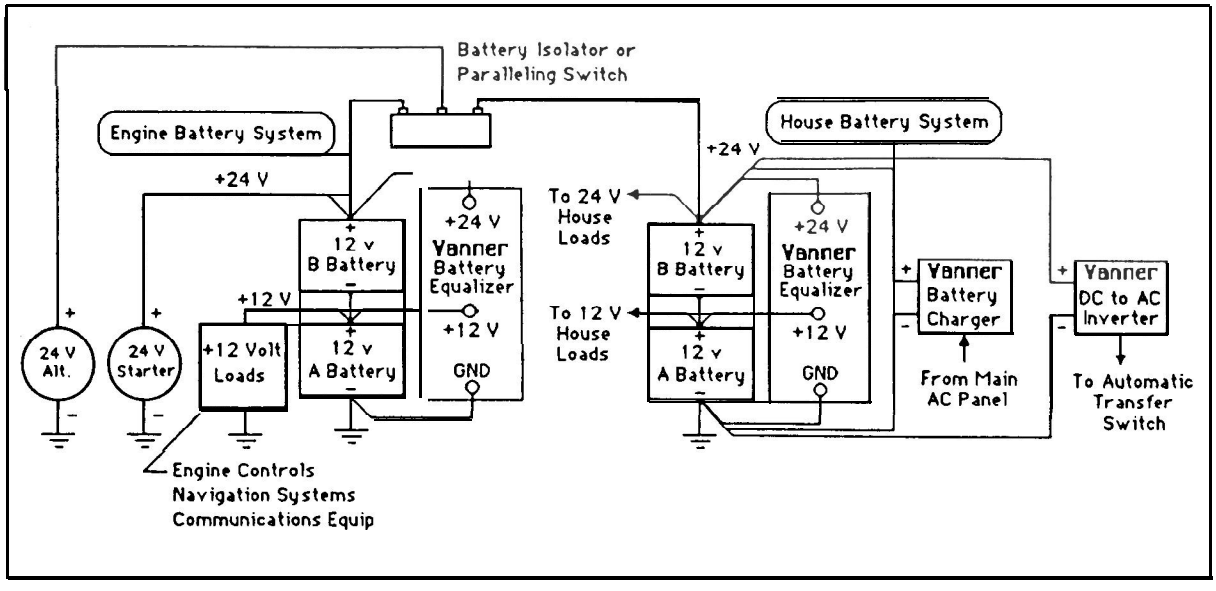

TRANSIT BUS

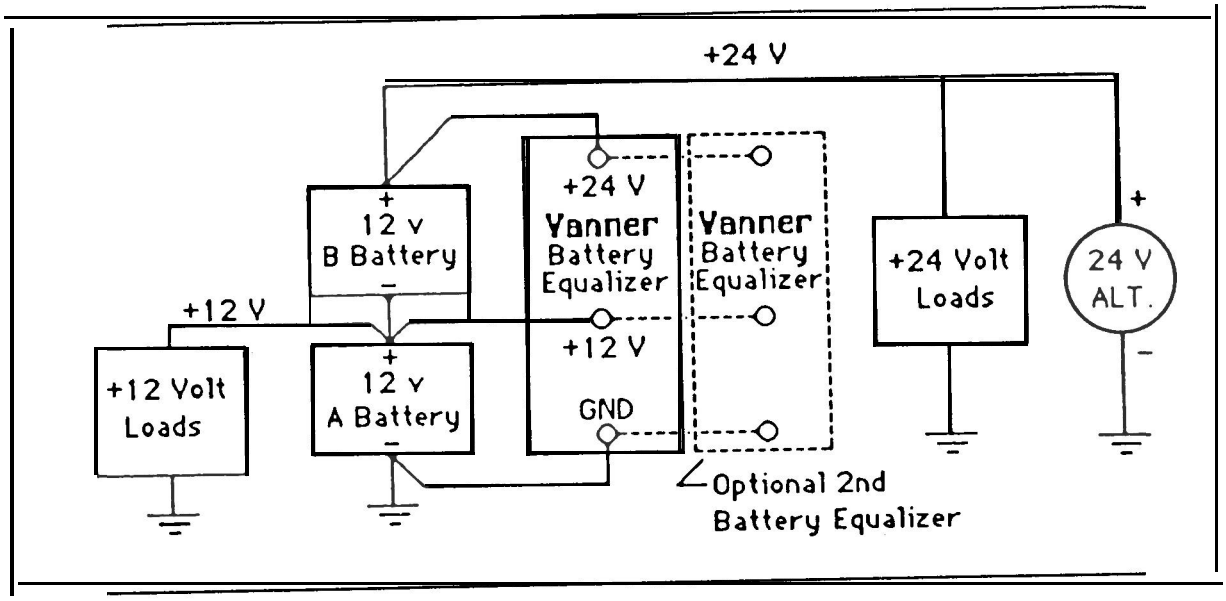

TOUR/CHARTER COACH

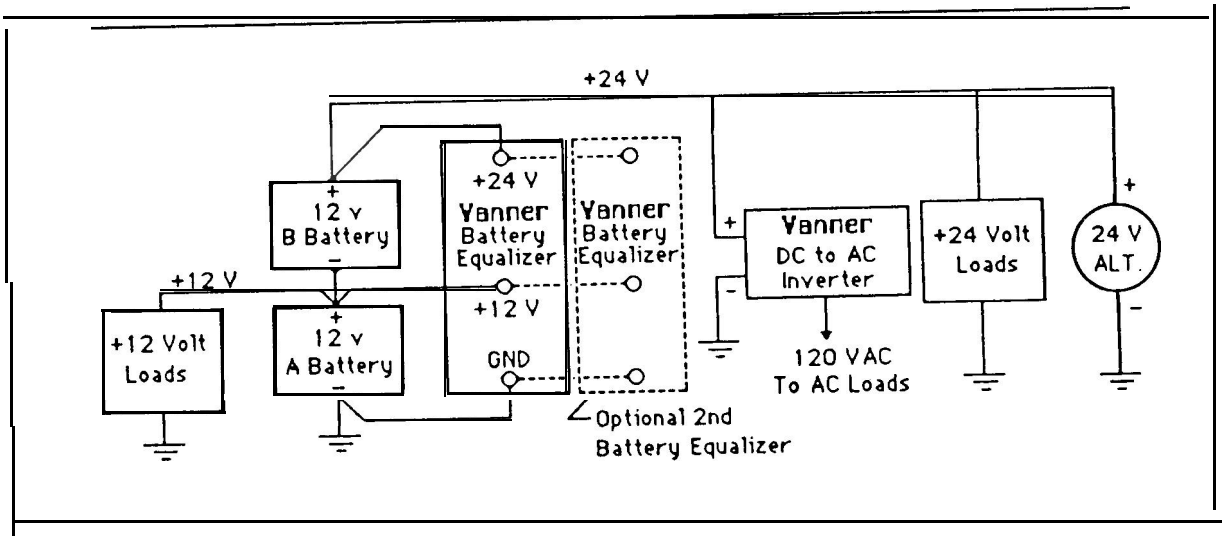

SOLAR SYSTEM

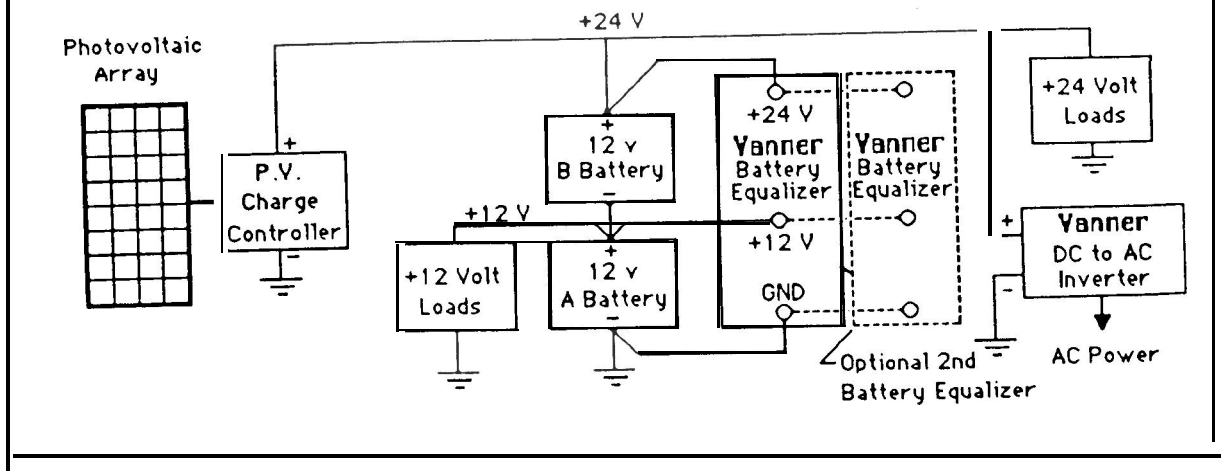

Operation

The *VoltMaster* Battery Equalizer is a completely automatic device that requires no human intervention when installed according to the recommended procedures. The only operational device on the unit is a manual reset type circuit breaker. If, due to a system abnormality, this circuit breaker trips it can be reset by pushing the white button. Note that on some units the white circuit breaker button may protrude slightly in its normal (nontripped) position.

Installation Instructions

CAUTION

Do not expose to rain or moisture.

Do not mount in a zero-clearance compartment that may result in the Battery Equalizer overheating.

This equipment employs components that tend to produce arcs and sparks. To prevent fire or explosion, do not install in compartments containing batteries or flammable materials.

SAFETY

Safety goggles should always be worn when working near batteries.

Mounting Location - The Battery Equalizer may be mounted in any orientation. The recommended mounting orientation for optimum heat dissipation is vertical. The recommended orientation of the wiring terminals is down in order to prevent falling metal objects from shorting the terminals.

Environmental Protection -The unit should be located in an area that will protect it from direct exposure to moisture such as high pressure washing, rain, etc.

Wiring - To avoid reverse polarity damage when disconnecting battery terminals: always 1) Remove Equalizer ground terminal first, and 2) Replace Equalizer ground terminal last. Wiring between the Battery Equalizer and the batteries must be sufficiently large to prevent unwanted voltage drops. These voltage drops (loss) must be less than 0.05 VDC between the Battery Equalizer's +24 volt terminal and the battery +24 volt terminal, less than 0.10 VDC between the Battery Equalizer's+12 volt terminal and the battery +12 volt terminal (the jumper between the two 12 volt batteries), and less than

0.05 VDC between the Battery Equalizer's GND terminal and the lower 12 volt battery's (-) terminal (the battery terminal that is connected to chassis ground). In most installations, the Battery Equalizer's terminals are wired directly to the battery terminals to prevent voltage loss that could occur in switch contacts, connections, and long wire runs. See Wire Size Chart, Figure 1.

If a "ground side" battery disconnect switch is used, the Battery Equalizer's GND terminal must be wired to the battery side of the disconnect switch circuit.

On systems using "ground side" battery disconnect switches, precautions must be taken to protect polarity sensitive 12 volt loads. If these loads do not contain input diode protection, an external diode, such as Vanner model 52-75 (45 amp continuous rating), must be used.

Figure 1.
Recommemded wire size for Vainer Series 80 Battery Equalizers.

Wire Size AWG	Maximum wire length, in feet, between the Vanner Equalizer and the battery in an effort to keep wiring loses less than 0.1 volts and assuming the wire temperature is less than 80°C and no other loads.					
	6O-1OA or B	60-20A	60-50A	2 x 60-50A	3 x 60-50A	4 x 60-50A
#14	3.2	x x x	x x x	x x x	x x x	x x x
#12	5.0	2.5	x x x	x x x	x x x	x x x
#10	7.7	3.8	x x x	x x x	x x x	x x x
#8	12.8	6.4	2.6	x x x	x x x	x x x
#6	19.4	9.7	3.9	x x x	x x x	x x x
#4	35.2	17.6	7.0	3.5	2.3	x x x
#2	51.9	26.0	10.4	5.2	3.5	2.6
#1	65.4	32.7	13.1	6.5	4.4	3.3
#1/0	82.9	41.4	16.6	8.3	5.5	4.1
#2/0	105.5	52.7	21.1	10.5	7.0	5.3

IMPORTANT NOTE

The Vanner *VoltMaster* Battery Equalizer is an extremely reliable device, and when installed according to the instructions, will provide reliable operation for an indefinite period of time. However, if a system abnormality should develop that would cause a Battery Equalizer malfunction, damage to the battery system could possibly result if 12 volt loads are present. If your system application is critical you may consider installing a Vanner Model EM-70 Electrical System Monitor. This module monitors the battery system's voltages and balance, and provides fault signals that can be wired to warning lights, buzzers or other control/ warning devices. For more details refer to Vanner Product Bulletin 206.

Service and Troubleshooting

C A U T I O N

To avoid reverse polarity damage to the Equalizer when disconnecting battery terminals: always

1) Remvove Equalizer ground terminal first.
2) Replace Equalizer ground terminal last.

Servicing of electrical systems should only be performed by trained and qualified technical personnel.

Troubleshooting Guide

The following procedure should be followed to determine if your Battery Equalizer is functioning properly.

1. Carefully remove the ground (GND) cable from the Equalizer. Do not allow this cable to touch any other connection on the Equalizer because the other terminals are connected to the batteries.

2. Make sure there is approximately 12 volts between the +24 and +12 terminals of the Equalizer by momentarily connecting the two terminals of a 12 volt light (headlight, marker light, etc.) to the +24 and +12 terminals of the Equalizer. The light should light and stay lit.

3. Next, connect that same 12 volt load between the+12 and GND terminals of the Equalizer. The lamp should light and stay lit. If the lamp does not light, the light then goes out, or the light dims, the Equalizer requires repair. (See page 11.)

4. Further verification may be made by measuring the voltages on the Equalizer terminals. Be certain that the lamp used earlier is connected between the +12 and GND terminals.

5. Measure the voltage between +24 and +12 terminals. Note this reading.

6. Measure the voltage from the +12 terminal to GND. Note this reading.

7. Compare the two readings by subtracting the+12 to GND reading from the +24 to +12 reading. A properly functioning Equalizer is one where the difference is between -0.5 and +0.13 volts. For example, the +24 to +12 reading might be 12.85 volts. The +12 to GND voltage might read 12.75 volts. This Equalizer would be functioning properly with a 0.10 difference (12.85 minus 12.75 volts) which is within specifications.

As an additional aid in diagnosing Battery equalizer system problems refer to the following questions and answers.

Q) Will exceeding the output rating of the Battery Equalizer cause the circuit breaker (white button near the wiring terminals) to trip?

A) No, because the Battery Equalizer electronically limits the output current to a value less than the amount required to trip the circuit breaker. (Extreme conditions, such as 28 VDC input with 8 VDC output at very high ambient temperatures, may cause the circuit breaker to trip.)

Q) Why is the Battery Equalizer's circuit breaker value lower than its 12 VDC output current rating (35 amp circuit breaker in model 60-50A)?

A) The circuit breaker is in the ground circuit. Due to the unit's two to one (24/12 VDC) voltage conversion, the model 60-50A requires 25 amps at 24 VDC input to produce about 50 amps output at 12 VDC. Therefore, a 35 amp circuit breaker in the G ND circuit will properly protect for the maximum 25 amp rating.

Q) What causes the circuit breaker to trip on a Battery Equalizer?

A1) The Battery Equalizer's circuit breaker is designed to trip when the +12 volt to GN D terminals are exposed to reverse polarity.

A2) With the Battery Equalizer's GND terminal connected to chassis and the battery negative terminal disconnected, a short between a +24 volt circuit and chassis will pull the chassis up to +24volts, causing a reverse polarity on the +12 volt to GND circuits. The circuit breaker trips to protect the Battery Equalizer,

A3) With the Battery Equalizer's GND terminal connected to chassis and the battery negative cable disconnected, 24volt loads (e.g., starter motor) will pull the chassis up to +24 volt causing a reverse polarity on the Battery Equalizer's +12Volt to GND circuits. The circuit breaker will trip to protect the Battery Equalizer.

Q) What are some known conditions that could cause Batter-y Equalizer problems?

A1) Corrosive liquids forced into the Battery Equalizer's case from high pressure spray cleaning could shorten the normal life expectancy.

A2) Drilling into the case (except for the mounting flanges) can shorten the life or prevent the unit from operating initially. The installer may not realize the

Battery Equalizer is not operating correctly unless a 12 volt load is applied to the system and the Battery Equalizer 12 volt current is measured.

A3) Loose or corroded connections, as well as incorrectly sized wire, will prevent optimum functioning of the Battery Equalizer. Voltage loss in wire from the battery's +24 volt terminal to the Battery Equalizer's +24 volt terminal should be 0.05 VDC maximum; from the battery's +12 volt terminal to the Battery Equalizer's +12 volt terminal should be 0.10 VDC maximum, and from the battery ground terminal to the Battery Equalizer's GND terminal should be 0.05 VDC maximum, when the +12 volt load is causing the Battery Equalizer to operate at 100% capacity.

A4) Installing the Battery Equalizer in a location where it will be exposed to battery fumes will shorten its normal life. Acid fumes are heavier than air. Installation of Battery Equalizers on the battery mounting surface near the bottom of the batteries can cause severe corrosion to the Battery Equalizers. However, installation of Battery Equalizers 3 or more inches above the top of the batteries has not caused problems.

A5) Installing the Battery Equalizer on the underside of a vehicle or in a location where it will be exposed to road/salt spray will shorten its life. This is especially true if, because of location, the unit is exposed to a high pressure wash.

VANNER REPAIR SERVICE

Vanner offers a quick turn around factory repair service. Send the unit to the address below with a note instructing us to repair it. Include your name, phone number, shipping address (not a P.O. Box Number), and your purchase order number,

VANNER WELDON INCORPORATED

4282 Reynolds Drive
Hilliard, Ohio 43026 U.S.A.
Tel. (614) 771-2718
Fax. (614) 771-4904

Warranty

LIMITED WARRANTY

1. Vanner Weldon Incorporated, referred to herein as Vanner, warrants that this product is free from defects in materials and workmanship for a period of one (1) year from its date of purchase.

2. This warranty does not cover defect caused by misuse, neglect, accident, reversed polarity, unauthorized repairs and/or replacements.

3. All warranties of merchantability and fitness for a particular purpose; written or oral, express or implied, shall extend only for a period of one (1) year. There are no other warranties which extend beyond those described on the face of this warranty.

4. Vanner does not undertake responsibility to any purchaser of its product for any undertaking, representation, or warranty made by any dealers or distributors selling its products beyond those herein expressed.

5. Vanner does not assume responsibility for incidental or consequential damages, including, but not limited to responsibility for loss of use of this product, loss of time, inconvenience, expense for telephone calls, shipping expense, loss or damage to personal property, or loss of revenue.

6. Vanner reserves the right to repair, replace, or allow credit for any material returned under this warranty. Any damage caused by the customer will be charged or deducted from allowance.

VANNER WELDON INCORPORATED

4282 Reynolds Drive
Hilliard, Ohio 43026 U.S.A.
Tel (614) 771-2718
Fax (614) 771-4904

© Copyright 1993, Vanner Inc.
Printed in U.S.A. 05/94
Specification subject to change without notice.

VANNER WELDON INC.

4282 REYNOLDS DRIVE
HILLIARD, OHIO 43026
PHONE: 614-771-2718 FAX: 614-771-4904

How can the Ground Fuse blow in a 6O-1OOC?

The blown fuse in the 6O-1OOC is usually a rare problem. The 6O-1OOC has been designed with circuits to monitor the DC input voltages and 12 volt output current. The circuits only close the relays to the power circuits when the proper conditions are met. The proper conditions to turn the unit ON are 1) the 24 volt terminal greater than 18 volts, 2) the 12 volt terminal greater than 8 volts **AND** 3) the 12 volt terminal less than 48% of the 24 volt terminal. Once the unit is ON the unit regulates the 12 volt terminal at 50% of the 24 volt terminal ± a small tolerance. The conditions which turn the unit OFF are 1) the 24 volt terminal less than 18 volts, 2) the 12 volt terminal less than 8 volts **OR** 3) the 12 volt terminal drops to less than about 3 amps.

To blow the fuse, the 60-100C must be in the ON mode and someone disconnects the battery ground connection from the chassis. If the 60-100C ground connection is still connected to the chassis and the 6O-1OOC was ON it will remain ON until the 12 volt load drops below 3 amps or the voltage between the 24 and ground terminals goes less than 18 volts.

The unit is basically simulating the Battery “A” thus does not see the 12 to ground terminals drop below 8 volts. Should a 12 volt load greater than 3 amps remain on, the unit remains ON.

Now if a large 24 volt load (starter, wrench, wires, etcetera) is connected from Battery “B” positive to chassis ground the 60-1OOC supplies full output current but can no longer simulate Battery “A”. The voltage 12 terminal to ground collapses and then reverses since the vehicle chassis is now at +24 volts (DC meter negative lead connected to Battery “A” negative, DC meter positive lead connected to chassis). Before the relays can disconnect the power circuit the ground fuse may blow.

(May 23, 1995 GEW)

SECTION 07: TRANSMISSION

CONTENTS

1. DESCRIPTION 07-3
    1.1 Manual Transmission 07-3
    1.2 Automatic Transmission 07-3
        1.2.1 Retarder 07-3
2. WELDING PROCEDURES 07-3
3. MAINTENANCE 07-4
    3.1 Manual Transmission 07-4
        3.1.1 Oil Recommendations 07-4
        3.1.2 Oil Check 07-4
        3.1.3 Oil Change 07-5
        3.1.4 Metal Particles 07-5
    3.2 Automatic Transmission 07-5
        3.2.1 Cold Check 07-6
        3.2.2 Hot Check 07-6
        3.2.3 Readout of the Oil Level Sensor 07-7
        3.2.4 Keeping Oil Clean 07-7
        3.2.5 Oil Recommendations 07-7
        3.2.6 Oil Contamination 07-9
        3.2.7 Metal Particles 07-9
        3.2.8 Coolant Leakage 07-9
        3.2.9 Oil and Filter Change 07-9
4. GEAR SHIFT LINKAGE (Manual Transmission) 07-10
    4.1 Adjustment 07-10
    4.2 Lubrication 07-11
5. TRANSMISSION REMOVAL 07-11
    5.1 Automatic Transmission 07-11
    5.2 Manual Transmission 07-13
6. MANUAL TRANSMISSION DISASSEMBLY AND REASSEMBLY 07-13
7. CLEANING AND INSPECTION OF THE TRANSMISSION 07-14
    7.1 Automatic Transmission 07-14

7.1.1 Breather 07-14
7.2 Manual Transmission 07-14
7.2.1 Cleaning 07-14
8. TRANSMISSION INSTALLATION 07-14
8.1 Automatic Transmission 07-14
8.2 Manual Transmission 07-16
9. ALLISON TRANSMISSION PRINCIPLES OF OPERATION 07-17
10. TROUBLESHOOTING 07-17
10.1 Manual Transmission 07-17
10.2 Automatic Transmission 07-17
10.2.1 Diagnostic Code Memory 07-17
11. SPECIFICATIONS 07-32

LIST OF ILLUSTRATIONS

FIG. 1: PLUGS 07-4
FIG. 2: OIL LEVEL DIPSTICK 07-5
FIG. 3: DIPSTICK 07-6
FIG. 4: PLUG AND FILTERS 07-10
FIG. 5: GEAR SHIFT LINKAGE 07-11
FIG. 6: ENGINE COMPARTMENT 07-12
FIG. 7: UNDER VEHICLE VIEW 07-14
FIG. 8: TRANSMISSION BRACKET 07-15
FIG. 9: ENGINE COMPARTMENT R.H. SIDE 07-16

1. DESCRIPTION

H3 vehicles may be provided with either a manual or an automatic transmission.

1.1 Manual Transmission

The Spicer PS130-6B, 6-speed, has 6 forward speeds and 1 reverse speed.

The Spicer PS145-7A, 7-speed, has 7 forward speeds and 1 reverse speed.

1.2 Automatic Transmission

The B500(R) world transmission has 6 speeds with two top range (fifth and sixth) overdrives. Total coverage is determined by dividing the highest gear ratio by the lowest gear ratio. Total coverage expresses the transmission gear ratio versatility. Transmissions with larger total coverage number have a wider variety of available ratios.

An electronic control allows the transmission to shift at exactly the right point on the engine's fuel consumption curve for best economy. Early lockup maintains the highest possible mechanical efficiency through the closely-spaced gear steps, culminating in two overdrive ratios. This combination allows progressive shifting techniques, where engine speeds are reduced for higher efficiency and lower fuel consumption.

Gear selection and torque converter modes are controlled by a microcomputer-based electronic transmission management system. It is fed information regarding throttle position, operator range selection, engine speed, turbine speed, transmission output speed and various system pressures from special electronic sensors. With this information, it computes shift points and clutch pressures to meet immediate needs. Using closed loop adaptive logic, the electronic control looks at a number of parameters during the shift, and makes minute adjustments to match the shift to desired profile stored in its memory. It then looks at these adjustments and resets the parameters which allow the transmission to quickly compensate for variations in load, terrain or environment, and to adjust for clutch wear and engine power changes. A diagnostic Data Reader can be connected to the electronic control unit to provide a self-check of all systems in the transmission. Four-digit trouble codes greatly reduce the time it takes to pinpoint potential problems. (Refer to paragraph "10. TROUBLESHOOTING" in this section).

1.2.1 Retarder (if applicable)

This optional auxiliary braking device for the automatic transmission is integrated into the basic envelope of the transmission and transmits its braking force directly to the propeller shaft. It requires no additional length and adds only 75 pounds (34 kg) of weight. Operation of the retarder is controlled electronically by the driver's use of the brake and/or by hand control lever. When activated, fluid enters a cavity and provides resistance to the turning of rotor blades revolving with the output shaft. This effectively slows the vehicle to the point where the service brakes are needed only for final stopping. The retarder is fully modulated and is compatible with ABS.

2. WELDING PROCEDURES

The following precautions are to be taken to protect the electronic control components. Refer to Section 1, paragraph "8. WELDING PRECAUTION" in this manual.

3. MAINTENANCE

3.1 Manual Transmission

3.1.1 Oil Recommendations

The following lubricants are recommended in order of preference.

Temperature	Grade	Type
Above 0°F (-18°C) Below 0°F (-18°C)	SAE 30, 40, or 50 SAE 30	Heavy Duty Engine Oil meeting MIL-L-2104D or MIL-L 46152 B, API-SF or API-CD specifications (MIL-L-2104 B & C, OR 46152 are also acceptable)
Above 0°F (-18°C) Below 0°F (-18°C)	SAE 90 SAE 80	Straight Mineral Gear Oil R & O Type API-GL-1
Above 0°F (-18°C) Below 0°F (-18°C)	SAE 90 SAE 80	* Mild EP Gear Oil MIL-L-2105 or API-GL-4
All	CD SAE 50 CD SAE 30	Synthetic Engine Oil meeting MIL-L-2104 D or MIL-L-46152 B, API-SF or API-CD specifications
All	EP SAE 75W90 EP SAE 75W140	* Synthetic Gear Oil meeting MIL-L-2105C or API-GL5 specifications

*EP gear oils are not recommended when lubricant operating temperatures are above 230°F (110°C).

3.1.2 Oil Check

Manual transmission oil should be checked when engine is stopped and cold. Check level, and add if necessary, every 6,250 miles (10 000 km) or twice a year, whichever comes first.

Warning: *Before servicing the coach, park safely over a repair pit, apply parking brake, stop engine and set battery master switch to the off position.*

Unscrew the fill plug and verify if the oil level is at plug thread level (Fig. 1).

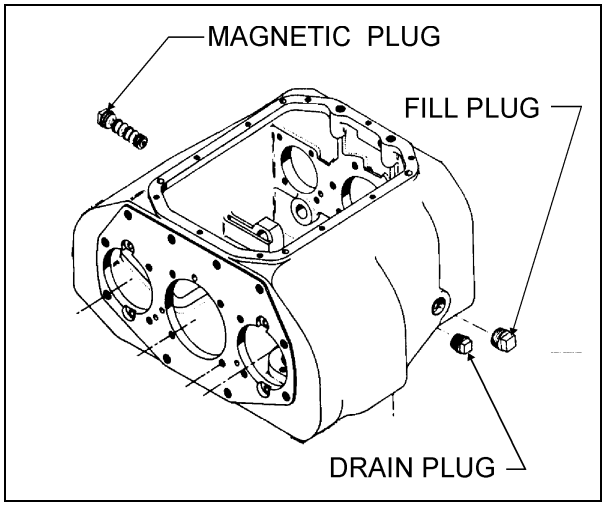

FIGURE 1: PLUGS 07010

3.1.3 Oil Change

Change break-in oil after 3,000 miles (4 800km) of initial operation, then every 50,000 miles (80 000 km) or once a year, whichever comes first.

Drain manual transmission as follows :

1. Unscrew the drain plug (Fig.1) and allow the oil to drain into a suitable container.

2. Inspect plug and replace if necessary. Reinstall plug.

Refill manual transmission as follows :

1. Remove fill plug.

2. Add oil until it overflows.

3. Clean oil from the transmission case and the fill plug.

4. Reinstall plug.

Caution: *Do not overfill transmission. Oil breakdown due to excessive heat and/or sludge deposits impairing proper operation of transmission may result.*

3.1.4 Metal Particles

The magnetic plug attracts metal particles. When metal particles are of abnormal size, the transmission must be disassembled

3.2 Automatic Transmission

To gain access to the dipstick, open the engine compartment rear door. The dipstick is located beside the engine (Fig. 2).

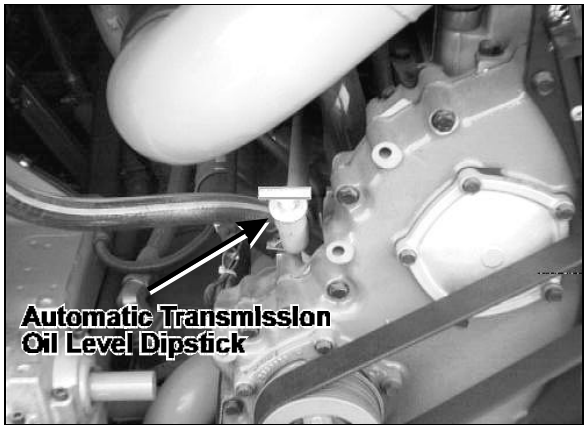

FIGURE 2: OIL LEVEL DIPSTICK OEH3B706

To check the transmission oil level, a cold check and a hot check must be performed. A cold check must be made between 60°F (16°C) and 140°F (60°C). The transmission oil temperature gauge indicates the operating temperature and it is located in the driver's area on the central dashboard with tachograph.

Note: *Perform the cold check first to verify the transmission oil level before performing the hot check.*

The hot check can be performed when the transmission oil reaches the normal operating temperature of 160°F (71°C) to 200°F (93°C).

Clean all dirt from around the end of the oil fill tube before removing the dipstick. Dirt or foreign matter must not be permitted to enter the oil system since it will cause valves to stick, undue wear of transmission parts, and clogged passages. Check the oil level in accordance with the following procedures and record any abnormal level on your maintenance records.

***Warning**: When checking the oil level, be sure that the parking brake and/or emergency brakes are set and properly engaged, and the wheels are chocked. Unexpected and possible sudden vehicle movement may occur if these precautions are not taken.*

Always check the oil level reading at least twice when the engine is running. Consistency is important in maintaining the accuracy of the reading. If inconsistent readings persist, check the transmission breather to ensure it is clean and free of debris.

3.2.1 Cold Check

1. Park the vehicle on a level surface and apply the parking brake.

***Caution:** The oil level rises as sump temperature increases. DO NOT fill above the "Cold Run" band if the transmission oil is below normal operating temperature.*

2. Run the engine for at least one minute. Shift to Drive (D) and then to Reverse (R) to clear the hydraulic circuits of air. Then shift to Neutral (N) and allow the engine to idle (500 - 800 rpm).

3. While the engine is running, remove the dipstick from the tube and wipe it clean (a typical dipstick is shown in Fig. 3).

4. Insert the dipstick into the tube and remove, checking the oil level reading. Repeat the check procedure to verify the reading. If the oil reading is within the "COLD RUN" band, the level is satisfactory for operating the transmission until the oil is hot enough to perform a "HOT RUN" check. If the oil reading is not within the "COLD RUN" band, add or drain oil as necessary to bring the level to the middle of the "COLD RUN" BAND.

5. Perform a hot check at the first opportunity after the normal operating temperature of 160°F (71°C) to 200°F (93°C) is attained.

3.2.2 Hot Check

***Caution:** The oil must be hot to ensure an accurate check for this procedure. The oil level rises as temperature increases.*

1. Operate the transmission in drive range until normal operating temperature is reached 160°F (71°C) to 200ºF (93°C).

2. Park the vehicle on a level surface and shift to neutral. Apply the parking brake and allow the engine to idle (500 - 800 rpm).

3. While the engine is running, remove the dipstick from the tube and wipe it clean.

4. Insert the dipstick into the tube and remove, checking the oil level reading. Repeat the check procedure to verify the reading.

The safe operating level is anywhere within the "HOT RUN" band on the dipstick. (Typical dipsticks are shown in Figure 3).

5. If the oil level is not within the "HOT RUN" band, add or drain oil as necessary to bring the oil level within the band.

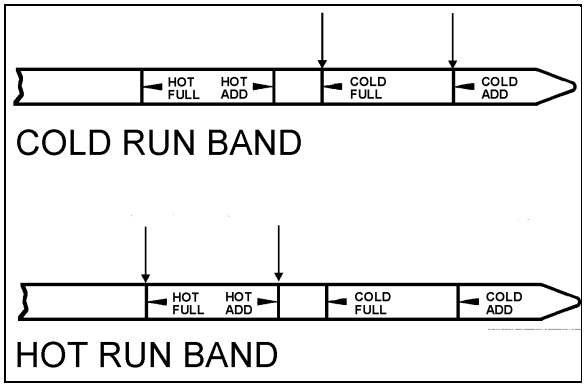

FIGURE 3: DIPSTICK 07006

***Note:** The cold check is more appropriate for verifying the oil level after the first fill-up. In case of conflict, the hot check has priority over the cold check; the automatic system of verification via the shift selector has priority over the hot check.*

3.2.3 Readout of the Oil Level Sensor

The oil level sensor (OLS) is designed to measure transmission oil level only when the following combination of operating conditions exist:

1. Engine must be at idle;
2. **NEUTRAL** must be selected;
3. Zero output speed;
4. Transmission oil must be within a "normal" temperature band (160-250°F; 70-120°C); and
5. Once the first four (4) conditions are met, there must be a "waiting" period (approx. 2 min., to facilitate consistent oil drainback) before oil level measurement begins.

To enter OLS readout mode (after meeting the conditions noted above), simultaneously press the UPSHIFT and DOWNSHIFT arrows on the shifter. If the five (5) conditions noted above are present, the display will immediately enter the reading mode. If the "waiting" period has not elapsed, the left digit of the display will become a "chasing" digit and the right digit will count down from (8) to (1) until the waiting period is complete.

After attaining the reading mode, the display will flash *"OL-OK"*, *"LO-01"*, *"HI-02"*, etc., where the suffix *"01"* or *"02"* indicates the volume of oil (in quarts) either low or high.

At any time in this sequence, simultaneously pressing the UPSHIFT and DOWNSHIFT arrows directs the ECU to enter the transmission diagnostic mode as described under *"10. TROUBLESHOOTING"* in this section. D, N, or R may also be selected on the shifter at any time - the OLS mode will abort and normal transmission will commence. Shifts are not inhibited.

Oil Level Sensor (OLS) Codes

CODE	CAUSE OF CODE
OL-OK	Oil Level Is Correct
LO-01	One Quart Low
LO-02	Two Quarts Low
HI-01	One Quart High
HI-02	Two Quarts High
OL-50	Engine Speed (RPM) Too Low
OL-59	Engine Speed (RPM) Too High
OL-65	Neutral Must Be Selected
OL-70	Sump Oil Temperature Too Low
OL-79	Sump Oil Temperature Too High
OL-89	Output Shaft Rotation
OL-95	Sensor Failure

3.2.4 Keeping Oil Clean

Oil must be handled in clean containers, fillers, etc., to prevent foreign material from entering the transmission. Lay the dipstick in a clean place while filling the transmission.

Caution: *Containers or fillers that have been used to handle antifreeze or engine coolant must NEVER be used for handling transmission fluid. Antifreeze and coolant solutions contain ethylene glycol which, if introduced into the transmission, can cause the clutch plates to fail.*

3.2.5 Oil Recommendations

Hydraulic oils used in the transmission have an important influence on transmission reliability and durability. In order of preference DEXRON-III and DEXRON-IIE, MIL-L-2104D, and type C-4 oils (Allison approved SAE 10W or SAE 30) are recommended. Type C-4 oil is the only oil approved for use in off-highway applications. Use type SAE 30 where ambient temperature is consistently above 86°F (30°C). Some DEXRON-II oils are also qualified as type C-4 oils and may be used in off-highway applications. However, a DEXRON-II fluid which is not a qualified type C-4 oil must never be used in off-highway applications. Consult your local Allison dealer or distributor to determine if a DEXRON-II oil is also a qualified type C-4 oil.

Ford Motor Company specification oils M2C33-F, M2C138-CJ and M2C166-H may be used and may be intermixed with DEXRON-II oil.

Oil specifications and ambient temperature operating conditions	
Oil type	Ambient temperature
MIL-L-2104D, DEXRON-II,C-4	120°F (48°C) to -25°F (-32 °C)
MIL-L-46167	-25°F (-32°C) to -60°F (-51°C)

The use of an arctic preheat kit is recommended at temperatures below -25°F (-32°C). If a preheat kit is not available, the ECU will restrict full operation until the sump temperature is increased. The chart below shows the temperature ranges in which the transmission will operate. It should be noted that at lower sump temperature, the transmission's operation may be restricted.

Transmission Oil Temperature	**DO NOT SHIFT Light**	**Operation**
Below -26°F (-32°C)	ON	Neutral only
-24°F (-31°C) to +19°F (-7°C)	OFF	Start with neutral and reverse, normal upshifts
+20°F (-6°C) to 260°F (126°C)	OFF	Full operation in all ranges
Above 260°F (126°C)	ON	Inhibits 5th and 6th ranges

3.2.6 Oil Contamination

At each oil change, examine the drain oil for evidence of dirt or water. A nominal amount of condensation will emulsify during operation of the transmission. However, if there is evidence of water, check the cooler (heat exchanger) for other signs of leakage. This, however, may also indicate leakage from the engine oil system.

3.2.7 Metal Particles

Metal particles in the oil (except for the minute particles normally trapped in the oil filter) indicate damage has occurred in the transmission. When these particles are found in the sump the transmission must be disassembled and closely inspected to find the source. Metal contamination will require complete disassembly of the transmission and cleaning of all internal and external circuits, coolers, and all other areas where the particles could lodge.

Caution: *If excessive metal contamination has occurred, replacement of the oil cooler and replacement of all bearings within the transmission is recommended.*

3.2.8 Coolant Leakage

If engine coolant leaks into the transmission oil system, immediate action must be taken to prevent malfunction and possible serious damage. The transmission must be completely disassembled, inspected, and cleaned. All traces of the coolant contamination must be removed. Friction clutch plates contaminated with ethylene glycol must be replaced.

3.2.9 Oil and Filter Change

Transmission oil change must be performed with the vehicle on a flat and level surface and with parking brake applied. Oil and oil filter change frequency is determined by the severity of service and operating conditions of the transmission and by the filter equipment installed. See table 1 for oil and filter change intervals.

More frequent changes may be required when operations are subject to high levels of contamination or overheating.

Table 1: Oil And Oil Filter Change Intervals
Change break-in oil after 3,000 miles (4 800 km) of initial operation and subsequently every 25,000 miles (40 000 km) or once a year, whichever comes first.

The procedure for changing the oil and oil filters for the transmission is as follows:

Drain

1. The transmission should be at an operating temperature of 160°F (71°C) to 200°F (93°C) when the oil is drained. This will ensure quicker and more complete fluid drainage.

2. Remove the drain plug from under the transmission (Fig. 4) and allow the oil to drain into a suitable container. Check the condition of the oil as described previously.

3. To replace the integral filters, remove twelve bolts, two filter covers, two O-rings, two square cut seals and the two filters from the bottom of the control module (Fig. 4).

4. To install filters, pre-lube and install the two O-rings, the two square cut seals followed by the filters (lube the O-ring in filter cartridge only) into the filter compartment. Index each filter/cover assembly to holes in channel plate/sump. Push the cover assembly in by hand to seat the seals.

Caution: *Do not use bolts to draw the cover to sump. This can damage the cover, seal, or sump.*

5. Install six bolts into each cover and tighten to 38-45 lbf•ft (51-61 N•m).

6. Inspect the drain plug and O-ring. Replace if necessary. Reinstall the drain plug and tighten to 18-24 lbf•ft (25-32 N•m).

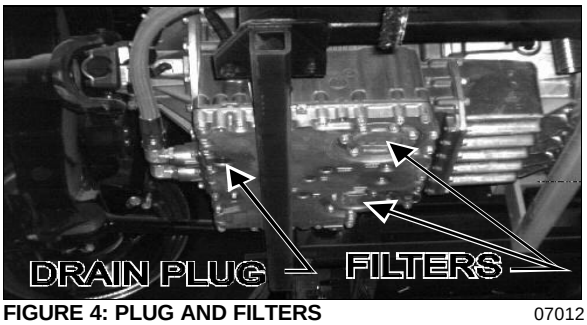

FIGURE 4: PLUG AND FILTERS 07012

Refill

Refill with 37 US qts (39 liters) and check the oil level using the previously described procedure. The refill amount is less than the initial fill because some of the oil remains in the external circuits and transmission cavities.

4. GEAR SHIFT LINKAGE ADJUSTMENT (Manual Transmission)

4.1 Adjustment

1. Put the transmission lever in "NEUTRAL" position.

2. Loosen nuts (1, Fig. 5) and nuts (2, Fig. 5).

3. Adjust the gear shift lever in neutral position:

   a. Put the shifter lever in first gear and measure the distance A on the gear shaft (Fig. 5).

   b. Put the shifter lever in second gear and measure the distance B on the gear shaft (Fig. 5).

4. Put the shifter lever in neutral. (The middle position between points A and B is the "NEUTRAL FRONT REAR" position).

5. Hold the lever at approximately 2 1/2" from the seat transverswise.

6. Adjust tolerance at shift lever pivot to the 1-1/5" (31 mm).

7. Rotate the rear shaft "C" to get the rear U-joint "D" at horizontal position.

8. Tighten all loose nuts (1) and (2).

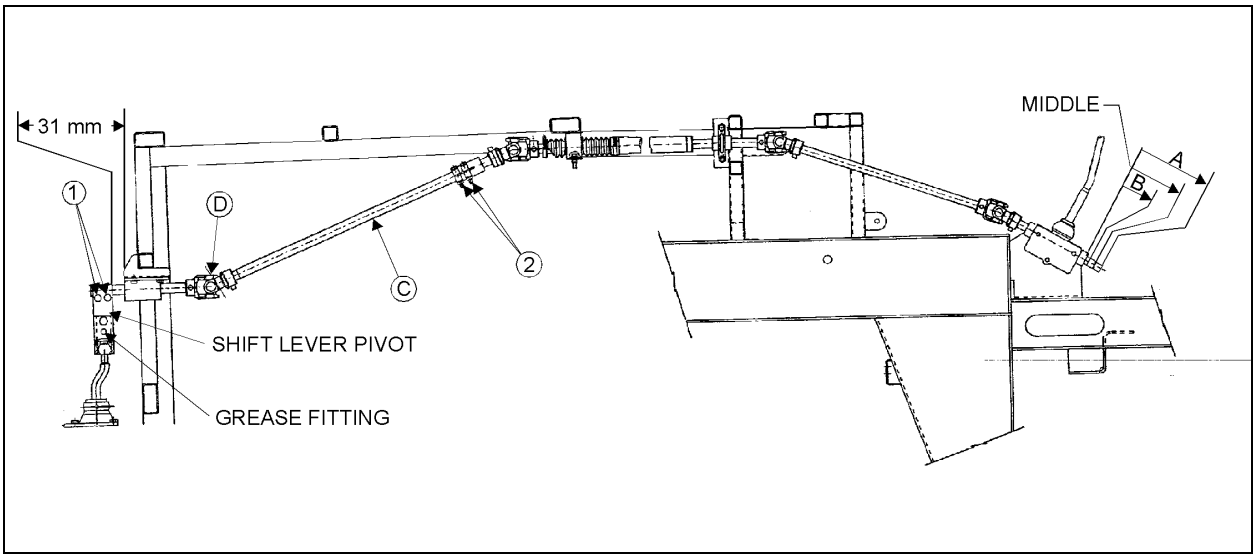

FIGURE 5: GEAR SHIFT LINKAGE 07013

4.2 Lubrication

Grease with good quality lithium-base grease NLGI No.1 (Fig. 5):

- The shift lever pivot: service every 6,250 miles (10 000 km), grease 1 fitting.
- Shift control rod universal joints: service every 25,000 miles (40 000 km); grease 4 fittings.

Only during disassembly, grease the following with NLGI No.1:

1. The shift lever housing;
2. Transmission lever ball; and
3. Axle bearing.

5. TRANSMISSION REMOVAL

5.1 Automatic Transmission

The following procedure deals with the removal of the transmission without removing the power plant cradle from vehicle. The methods used to support the transmission and engine depend upon conditions and available equipment.

1. Select transmission "NEUTRAL" position, apply parking brake, then turn main battery disconnect switches to the "OFF" position.
2. Jack up vehicle, then place safety support below body.

Caution: *Only the recommended jacking points must be used as outlined in Section 18, BODY.*

Note: *For more clearance between the tag axle and transmission, the tag axle may be unloaded and jacked up or retracted (if applicable).*

3. Remove engine splash guards surrounding transmission.
4. Remove cross member from under transmission.
5. Remove the transmission drain plug and allow oil to drain. Inspect the drain plug washer and replace it if necessary. Reinstall the drain plug and tighten to 33-41 lbf•ft (45-56 N•m) (see in this section under heading "3.2.9 OIL AND FILTER CHANGE".

Warning: *It is better to drain oil when it is still warm. Avoid contact with oil since it can be very hot and cause personal injury.*

6. Remove transmission dipstick and filler tube.

7. Disconnect propeller shaft from transmission and remove its safety guard. Refer to Section 09,"Propeller Shaft".

8. Disconnect the two oil cooler hoses from transmission. Cover hose ends and fittings to prevent fluid contamination.

Warning: *A significant amount of oil may drain from oil lines when they are disconnected.*

9. Disconnect all sensors on L.H. side of the transmission.

10. Disconnect main wiring harness.

11. Disconnect the air supply line (steel-braided hose) from retarder control valve (if applicable).

12. Remove any locking tie, clamp and bracket that will interfere with removal of transmission.

13. Support transmission using a suitable transmission jack.

14. Remove the access plug from the flywheel housing on the R.H. side under the starter. From access plug, remove the 12 converter-to-flexible plate attaching screws. Rotate clockwise the alternator shaft to gain access to the attaching screws (Fig. 6).

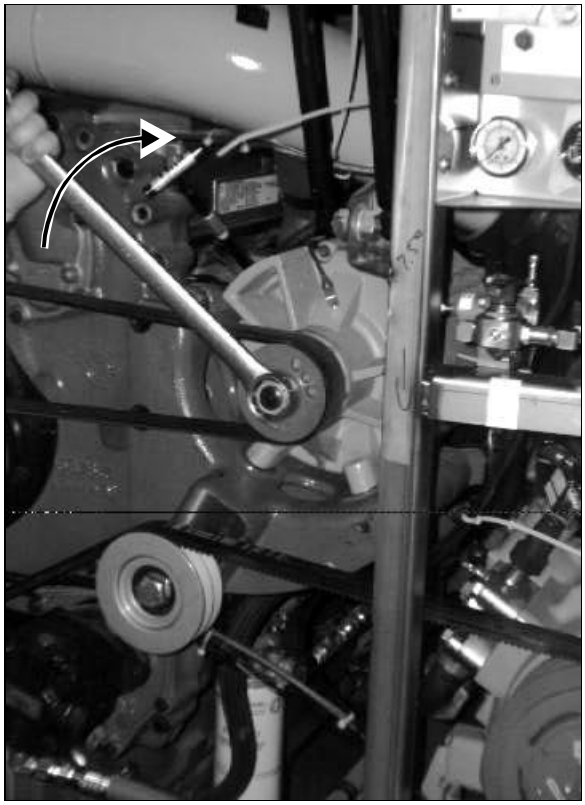

FIGURE 6: ENGINE COMPARTMENT 0701

Caution: *Do not rotate the alternator shaft counterclockwise to avoid loosening the shaft pulley retaining screw.*

15. Remove the 12 screws retaining the torque converter housing to the flywheel housing.

Caution: *Make sure transmission-to-engine alignment is maintained when removing screws to avoid damaging torque converter housing.*

16. Remove the transmission rubber mount above transmission by removing the nut, bolt and washer over the rubber and its support. Remove the bracket from transmission (only if the vehicle is equipped with a retarder).

17. Slowly pull transmission straight out to clear engine.

18. Remove the transmission.

5.2 Manual Transmission

The following procedures deal with the removal of the transmission without removing the power plant cradle from vehicle. The method used to support the transmission depends upon conditions and available equipment.

1. Set transmission shift lever to "neutral" position, apply parking brake, then turn main battery disconnect switches to the *"*OFF*"* position.

2. Jack up vehicle, then place safety supports below body.

Caution: *Only the recommended jacking points must be used as outlined in Section 18, Body.*

Note: *For more clearance between the tag axle and transmission, the tag axle may be unloaded and jacked up or retracted (if applicable).*

4. Remove engine splash guards surrounding transmission.

5. Remove cross member from under transmission.

6. Remove the transmission drain plug and allow oil to drain. Reinstall drain plug.

Warning: *It is better to drain oil when it is still warm. Avoid contact with oil since it can be very hot and cause personal injury.*

7. Disconnect propeller shaft from transmission and remove its safety guard. Refer to Section 09, *"Propeller Shaft"*.

8. Remove fiberglass transmission protection.

9. Disconnect gear shift linkage as follows:

a. Remove the two bolts that secure the coupling lever to the shift rod (1, Fig. 5).

b. Push the shift rod all the way into bushing.

10. Remove return spring and disconnect yoke. Remove clutch slave cylinder from transmission without disconnecting hoses.

Note: *Removing clutch slave cylinder will enable the release yoke to turn up and pull free from the release bearing thrust pads.*

11. Disconnect speedometer sensor, back-up signal switch and neutral start switch.

12. Remove any locking tie, clamp and bracket that will interfere with the removal of transmission.

13. Support transmission using a suitable transmission jack, then remove the twelve clutch/engine mounting screws.

Caution: *Make sure transmission-to-engine alignment is maintained when removing transmission. Do not let the rear end of transmission drop down and hang unsupported in the spline hubs of the clutch discs to avoid bending or distorting the friction discs.*

14. Slowly pull transmission straight out to clear the input shaft. Remove transmission.

6. MANUAL TRANSMISSION DISASSEMBLY AND REASSEMBLY

Refer to the “Manual Transmission” service manual from Spicer, annexed to the end of this section.

7. CLEANING AND INSPECTION OF THE TRANSMISSION

7.1 Automatic Transmission

The exterior of the transmission should be cleaned and inspected at regular intervals. The length of service and severity of operating conditions will determine the frequency of such inspections. Inspect the transmission for:

1. Loose bolts (transmission and mounting components);
2. Oil leaks (correct immediately);
3. Loose, dirty, or improperly adjusted throttle sensor linkage;
4. Damaged or loose oil lines;
5. Worn or frayed electrical harnesses, improper routing; and
6. Worn or out of phase drive line U-joint and slip fittings.
7. Worn ring gear teeth. Inspect ring gear teeth by the flywheel housing inspection hole (Fig. 7).

Caution: *DO NOT pressure wash the transmission electrical connectors. Water and detergent will cause the contacts to corrode or become faulty.*

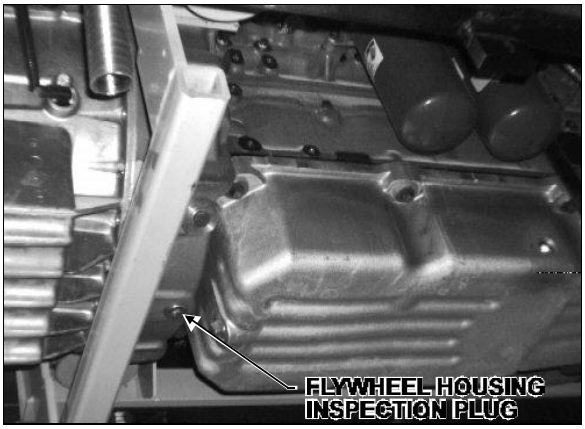

FIGURE 7: UNDER VEHICLE VIEW 01029

7.1.1 Breather

The breather is located at the top of the transmission. It serves to prevent pressure build-up within the transmission and must be cleaned and have the passage opened. The prevalence of dust and dirt will determine the frequency at which the breather requires cleaning. Use care when cleaning the transmission. Spraying steam, water or cleaning solution directly at the breather can force the water or solution into the transmission. Always use a wrench of proper size to remove or replace the breather. Pliers or pipe wrench can crush or damage the stem and produce metal chips which could enter the transmission.

7.2 Manual Transmission

7.2.1 Cleaning

Warning*: Use a petroleum-based solvent.*

Warning: *Do not use gasoline to clean parts. Gasoline can explode, causing serious physical injury.*

Caution: *Do not use water or steam to clean internal components. It could cause corrosion of these components.*

8. TRANSMISSION INSTALLATION

8.1 Automatic Transmission

Note*: For more clearance between the tag axle and transmission, the tag axle may be unloaded and jacked up, or retracted (if applicable).*

1. With the access plug removed, align one of the 12 attaching screw holes in the flexible plate with the access opening, on the R.H. side under the starter. See figure 6 for attaching screws alignment.

2. Place the transmission on a transmission jack.

3. Install a headless guide bolt into one of the 12 threaded holes for flexible plate attaching screws in the flywheel.

4. Lubricate the flywheel center pilot boss with molybdenum disulfide grease (Molycote G, or equivalent).

5. Raise transmission and position the flywheel pilot boss into the flexible plate adaptor. Align the guide bolt previously installed in the flywheel with the flexible plate hole facing the access opening in the flywheel housing.

Warning: *Severe damages and/or personal injury can occur if transmission is not adequately supported.*

6. Seat the transmission against the engine flywheel housing. NO FORCE IS REQUIRED. If interference is encoun-ered, move the transmission away from engine, then investigate the cause.

Caution: *The torque converter housing must be seated against the flywheel housing prior to tightening any screws. DO NOT USE SCREWS TO SEAT THE HOUSING.*

7. Start all torque converter housing screws, then tighten four of them gradually and in a criss-cross sequence around the housing. Tighten the 12 remaining screws. Recommended torque is between 42-50 lbf•ft (57-68 N•m).

8. Remove the guide bolt through the access opening in the flywheel housing. Replace it with a self-locking screw, finger-tight, start the remaining screws, then tighten to 17-21 lbf•ft (23-28 N•m).

9. Reinstall the access plug.

10. If the vehicle is equipped with a retarder; install the bracket on the transmission and tighten the bolt to 71-81 lbf•ft (96-110 N•m). Install the transmission rubber mount between the rubber support and the frame with a bolt, nut and washer. Tighten the nut until the tolerance of 2 9/32 ± 5/64 inches (58 ± 2 mm) is met (Fig. 8).

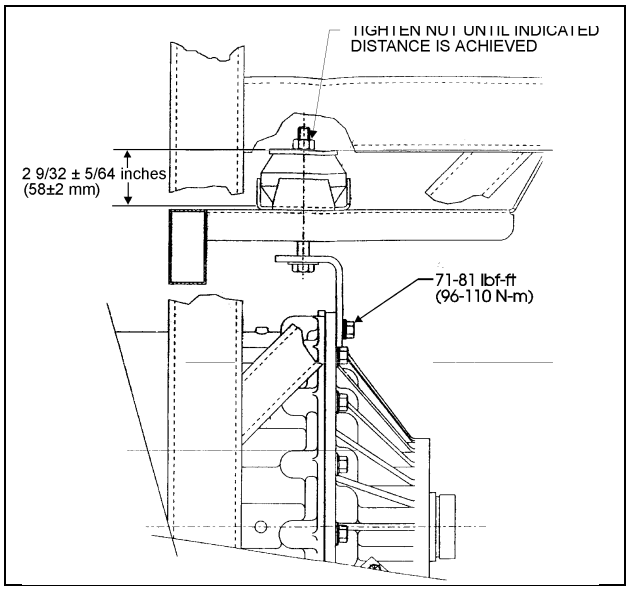

FIGURE 8: TRANSMISSION BRACKET 07014

11. Remove jack from under transmission.

12. Connect all sensors.

13. Connect the main wiring harness.

Note: *Refer to paragraph "4. GEAR SHIFT LINKAGE" of this section for proper adjustment.*

14. Connect the air supply line (steel-braided hose) to the retarder control valve (if applicable).

15. Connect the two transmission oil cooler hoses as they were previously.

16. Reinstall clamps and brackets, and replace locking ties that had been removed during removal procedure.

17. Install propeller shaft and its safety guard. Refer to Section 09, "Propeller Shaft".

18. Install transmission dipstick and filler tube.

19. Install cross member under transmission.

20. Install engine splash guards.

21. Adjust the retarder pressure to 80 ± 3 psi with the air pressure regulator. For more information refer to Section 12, "Brake and Air System", under heading "8.PRESSURE REGULATING VALVES". The air pressure regulator is located in engine compartment R.H. side (Fig. 9).

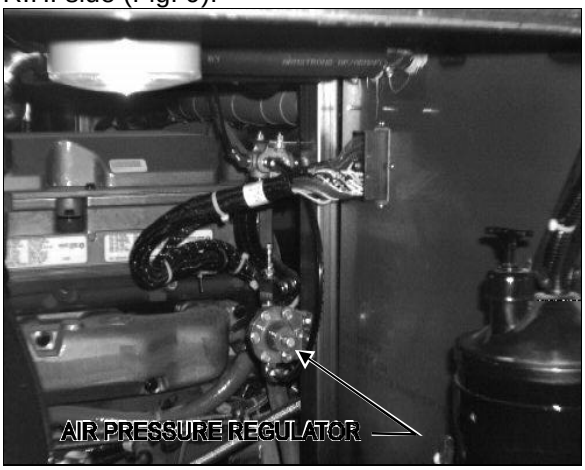

FIGURE 9: ENGINE COMPARTMENT R.H. SIDE 02003

22. Make sure that the drain plug is in place, then remove the transmission dipstick and pour approximately 37 US qts (39 L) of DEXRON-IIE or DEXRON-III automatic transmission fluid through the filler tube. Check and adjust oil level.

Caution: *Do not overfill the transmission. Overfilling can cause oil aeration (milky appearance) and overheating. If overfilling occurs, drain oil as required to bring it to the proper level.*

8.2 Manual Transmission

Note: For more clearance between the tag axle and transmission, the tag axle may be unloaded and jacked up or retracted (if applicable).

1. Place the transmission on a transmission jack.

2. Ensure clutch brake is in position on transmission input shaft.

3. Position the clutch release bearing with the flat section on top.

4. Shift transmission into 5th gear, then raise it and position the input shaft into clutch discs. Align input shaft splines with those on clutch discs by rotating the output shaft. As the input shaft enters the clutch discs, rotate the clutch release yoke backwards until the release yoke fingers clear the pads on release bearing housing. Rotate the clutch release yoke into proper position as transmission is pushed into place.

Caution: *Avoid hanging the weight of the transmission on the clutch or forcing the transmission into the clutch or flywheel housing. This can cause bent or sprung clutch discs and prevent the clutch from releasing.*

Caution: *The clutch housing must be seated against the flywheel housing prior to tightening any screw. Do not use screws to seat the housing.*

5. Install in all clutch/engine screws, then tighten them gradually and in a criss-cross manner around the housing. Tighten the remaining screws. Recommended torque is 44-50 lbf•ft (60-68 N•m).

6. Remove jack from under transmission.

7. Install clutch slave cylinder and its return spring.

Note: *Refer to Section 02, "Clutch" for adjustment.*

8. Connect speedometer sensor, back-up signal switch and neutral start switch.

9. Reinstall clamps, brackets, and replace locking ties that had been removed during removal procedure.

10. Shift transmission to neutral, then secure the coupling lever bolts.

Note: *Refer to paragraph "4. GEAR SHIFT LINKAGE" of this section, for proper adjustment.*

11. Install fiberglass transmission protection.

12. Install propeller shaft and its safety guard. Refer to Section 09, *"Propeller Shaft"*.

13. Install cross member under transmission.

14. Install engine splash guards.

15. Install tag axle wheels.

16. Make sure that the drain plug is in place, then refill transmission. Check and adjust oil level.

17. Adjust the servo clutch pressure to 40 psi with the air pressure regulator. For more information, refer to Section 12, "Brake and Air System", under heading "8. PRESSURE REGULATING VALVES". The air pressure is located in the engine compartment R.H. side (Fig. 9).

9. ALLISON TRANSMISSIONS PRINCIPLES OF OPERATION

Refer to "Allison Transmission, MD Series, Principles of Operation, SA 2454".

10. TROUBLESHOOTING

10.1 Manual Transmission

Refer to the Troubleshooting section in the Spicer Service Manual PS130-6B (6-speed) or PS145-7A (7-speed) depending upon the transmission installed on your vehicle. Manuals are annexed to the end of this section.

10.2 Automatic Transmission

Refer to *"*Allison Transmission, MD Series, Troubleshooting Manual, SA 2158A".

10.2.1 Diagnostic Code Memory

Diagnostic codes are logged in a list in memory (sometimes referred to as the queue), positioning the most recently occurring code first and containing up to five codes. The codes contained in the list have the information recorded as shown in the chart below. Access to the code list position, main code, sub code and active indicator is available through either the shifter display or the Pro-Link Diagnostic Data Reader (DDR). Access to the ignition cycle counter and event counter is obtained through the DDR only.

Code List Position	Main Code	Sub Code	Active Indicator	Ignition Cycle Counter	Event Counter
d1	21	12	YES	00	10
d2	41	12	YES	00	04
d3	23	12	NO	08	02
d4	34	12	NO	13	01
d5	56	11	NO	22	02
Displayed on shifter display and DDR			YES= ACTIVE= "MODE ON"	Ignition cycle counter and event counter are not available on shifter display	

Note: *All information is available with a diagnostic tool.*

The following paragraphs define the different parts of the code list.

Code List Position

The position (1 through 5) which a code occupies in the code list in memory. Positions are shown as "d1" (Diagnostic Code #1) through "d5."

Main Code

The general condition or area of fault detected by ECU.

Sub Code

The specific area or condition under the main code in which the condition was detected.

Active Indicator

Will be turned "ON" when a fault condition is active (shifter will display "MODE ON" or the DDR will display "YES"). Will be set to "OFF" when conditions exist to indicate fault condition is gone.

Ignition Cycle Counter

Used to clear diagnostic codes that are inactive from the code list in memory. A counter is incremented each time a normal ECU power down occurs following clearing of the Active Indicator. A code will be cleared from the list when the counter exceeds 25.

Event Counter

Used to count the number of occurrences of a diagnostic code occurs prior to the incident being cleared from the code list. The most recent code will be in position "d1". If the most recent code is one which is already in the code list, that code will be moved to position "d1", the Active Indicator will be turned "ON" (shifter will display "MODE ON" or the DDR will display "YES"), the Ignition Cycle Counter is cleared and "1" is added to the Event Counter.

Clearing the Active Indicator and code Records from the Code List in Memory

If the conditions causing a diagnostic code to be set are cleared, the Active Indicator can be manually cleared by holding the "MODE" button down continuously for 3 seconds until a tone is heard from the shifter.

To clear code records from the list, hold the "MODE" button down continuously for ten seconds until a second tone sounds. All diagnostic records in the list that are not active will then be cleared and the remaining records will be moved up the list.

Code Reading and Code Clearing Procedures

Diagnostic codes can be read and cleared by two methods: by using the Pro-Link 9000 DDR plugged in the receptacle located on L.H. lateral console or by using the shifter display. The use of the Pro-Link 9000 DDR is described in the instruction manual supplied with each tool. The method for reading and clearing codes described in this section refers only to entering of the Diagnostic Display Mode by the proper button selection.

The Diagnostic Display Mode may be entered for viewing of codes at any speed. Codes can only be cleared when the output speed = 0 and no output speed sensor failure is active.

The following descriptions explain how to use the shifter to read and clear codes.

Reading Codes

1. Enter the diagnostic display mode by pressing the "↑" and "↓" (upshift and downshift arrows) buttons at the same time on the push-button shifter.

Note: *If a "DO NOT SHIFT" condition is present at this time, the lever should be in the same position as it was at the time of code detection. If not, this shifter tone will sound continuously.*

Note: *If an oil level sensor is present, the oil level will be displayed first. Diagnostic code display is achieved by depressing the upshift and downshift arrows or display mode button a second time.*

2. Read the first code in the first of five code positions on the digital display of the shifter. For example, we will read code every two seconds as follows:

a. Code list position --"d1";
b. Main code --"25";
c. Sub code --"11"; and
d. Display will repeat cycle of a., b. and c. above.

3. Press the "MODE" button momentarily to view the second position (d2) in the same way as 2. above.

4. To view the third, fourth and fifth positions (d3, d4 and d5), momentarily press the MODE button as explained above

5, Pressing the "MODE" button momentarily after the fifth position is displayed will cause the sequence of code positions to start over with the irst position.

6. Any code which is active will be i ndicated by the "MODE ON" indicator (active indicator) being turned on while in that code position (while in the normal opération.

7. Any code position in the list which does not have a diagnostic code logged will display "- -" for both the main and sub code displays. All positions after a code codes.

Clearing Codes

1. Clearing of the active indicator is automatically done at ECU power down on all but code 69 34.

   Some codes will clear the active indicator automatically when the condition causing the code is no longer detected by the ECU (see Diagnostic Code List and Description.

2. Manual clearing is possible while in the diagnostic display mode and after the condition causing the code is corrected (output speed must be zero).

a. To clear all active indicators, hold the "MODE" button down continuously for 3 seconds until the shifter tone sounds for 0.5 seconds.

b. Release the "MODE" button to return to normal operating mode. If the condition causing the code was not active at the time, the active indicator will turn off.

Caution: *If clearing a code while locked in a Forward or Reverse position (fail-to-range), the transmission will still be in Drive or Reverse when the clearing procedure is completed. Neutral must be selected manually.*

Exiting the Diagnostic Display Mode

The diagnostic display mode can be exited by any of the following procedures:

1. Press the "↑" and "↓" (upshift and downshift) buttons at the same time on the push-button shifter.

2. Press any range button, "D", "N" or "R", on the push-button shifter (the shift will be commanded if it is not inhibited by an active code).

3. Do nothing and wait until the calibrated time (approximately 10 minutes) has passed and the system automatically returns to the normal operating mode.

4. Turn off power to the ECU (turn off the vehicle at the ignition switch).

5. After the clearing of a code, the active indicator procedure described above has been performed.

Clearing Records from the Code List in Memory

If the requirements for Manual Clearing the Active Indicator have been satisfied, and the "MODE" button is held down continuously for ten seconds while in the display mode until a tone sounds, all diagnostic records in the code list that are not active will be cleared and the remaining records will be moved up in the code list.

Abbreviations Found in the Code Chart

The following responses are used throughout the following chart to command safe operation when diagnostic codes are set.

1. **DNS** (**D**o **N**ot **S**hift) Response

a. Turn off lockup clutch and inhibit lockup operation.

b. Inhibit all shifts.

c. Turn on *DO NOT SHIFT* light.

d. Pulse the tone generator for 8 seconds when the condition is first detected.

e. Blank the select digit in the display.

f. Ignore any range selection inputs and disable the button feedback tone for the push-button shifter.

2. **SOL OFF** (**Sol**enoid **Off**) Response

a. All solenoids are commanded off (turning solenoids "A" and "B" off electrically causes them to be on hydraulically).

3. **RPR** (**R**eturn to **P**revious **R**ange)Response

a. When the ratio or C3 pressure switch tests associated with a shift are not passed, the ECU commands the same range as commanded at the beginning of the shift.

4. **NNC** (**N**eutral **N**o **C**lutches) Response

a. When certain ratio or C3 pressure switch tests are not passed, the ECU commands a neutral condition with no clutches applied.

Diagnostic code list and description

Main Code	Sub Code	Description	Do Not Shift Light	Inhibited Operation Description
12	12	Oil level, low	No	No upshift above a calibration range
12	23	Oil level,high	No	No upshift above a calibration range
13	12	ECU imput voltage, low	Yes	DNS, SOL OFF (Hydraulic default)
13	13	ECU imput voltage, medium low	No	None: Shift adaptive feature will not function.
13	23	ECU imput voltage, high	Yes	DNS, SOL OFF (Hydraulic default)
14	12	Oil level sensor, low	No	None
14	23	Oil level sensor, high	No	None
21	12	Throttle position sensor, low	No	Use Throttle default value
21	23	Throttle position sensor, high	No	Use Throttle default value
22	14	Engine speed sensor reasonableness test	No	Use default engine speed
22	15	Turbine speed sensor reasonableness test	Yes	DNS, Lock in current range
22	16	Output speed sensor reasonableness or rapid decel test	Yes	DNS, Lock in current range
23	12	Primary Shifter or RSI Link Fault	No	Hold in last valid direction
23	13	Primary Shifter Mode Function Fault	No	Mode change not permitted
23	14	Secondary Shifter or RSI Link Fault	No	Hold in last valid direction
23	15	Secondary Shifter Mode Function Fault	No	Mode change not permitted
24	12	Sump oil temperature, cold	Yes	DNS
24	23	Sump oil temperature, hot	No	No upshifts above a calibration range
25	00	Output speed reasonableness test, detected at 0 speed, (L)	Yes	DNS, Lock in current range (L)

Main Code	Sub Code	Description	Do Not Shift Light	Inhibited Operation Description
25	11	Output speed reasonableness test, detected at 0 speed, (1st)	Yes	DNS, Lock in current range (1 st)
25	22	Output speed reasonableness test, detected at 0 speed 2nd	Yes	DNS, Lock in current range (2nd)
25	33	Output speed reasonableness test, detected at 0 speed, 3rd	Yes	DNS, Lock in current range (3rd)
25	44	Output speed reasonableness test, detected at 0 speed, 4th	Yes	DNS, Lock in current range (4th)
25	55	Output speed reasonableness test, detected at 0 speed, 5th	Yes	DNS, Lock in current range (5th)
25	66	Output speed reasonableness test, detected at 0 speed, 6th	Yes	DNS, Lock in current range (6th)
25	77	Output speed reasonableness test, detected at 0 speed, R	Yes	DNS, Lock in current range (R)
32	00	C3 pressure switch open, L range	Yes	DNS, Lock in current range (L)
32	33	C3 pressure switch open, 3rd range	Yes	DNS, Lock in current range (3rd)
32	55	C3 pressure switch open, 5th range	Yes	DNS, Lock in current range (5th)
32	77	C3 pressure switch open, R range	Yes	DNS, Lock in current range (R)
33	12	Sump oil temperature sensor, low	No	Use default value of 200ø F (93ø C)
33	23	Sump oil temperature sensor, high	No	Use default value of 200ø F (93ø C)
34	12	EEPROM, factory cal. compatibility number wrong	Yes	DNS, SOL OFF (Hydraulic default)
34	13	EEPROM, factory calibration block checksum	Yes	DNS, SOL OFF (Hydraulic default)
34	14	EEPROM, Power Off Block checksum	Yes	Use previous location, or factory calibration and reset adaptive
34	15	EEPROM, Diagnostic Queue Block Checksum	Yes	Use previous location, or clear diagnostic queue

Main Code	Sub Code	Description	Do Not Shift Light	Inhibited Operation Description
34	16	EEPROM, Real Time Block Checksum	Yes	DNS, SOL OFF (Hydraulic default)
35	00	Power interruption (Code set after power restored)	No	NONE (Hydraulic default during interruption)
35	16	Real Time EEPROM Write Interruption	Yes	DNS, SOL OFF (Hydraulic default)
36	00	Hardware/Software not compatible	Yes	DNS, SOL OFF (Hydraulic default)
41	12	Open or short to ground, A solenoid circuit	Yes	DNS, SOL OFF (Hydraulic default)
41	13	Open or short to ground, B solenoid circuit	Yes	DNS, SOL OFF (Hydraulic default)
41	14	Open or short to ground, C solenoid circuit	Yes	DNS. SOL OFF (Hydraulic default)
41	15	Open or short to ground, D solenoid circuit	Yes	DNS, SOL OFF (Hydraulic default)
41	16	Open or short to ground, E solenoid circuit	Yes	DNS, SOL OFF (Hydraulic default)
41	21	Open or short to ground, F solenoid circuit	No	Lock-up inhibited
41	22	Open or short to ground, G solenoid circuit	Yes	DNS, SOL OFF (Hydraulic default)
41	23	Open or short to ground, H solenoid circuit	No	Retarder allowed, differential lock inhibited
41	24	Open or short to ground, J solenoid circuit	No	Low and 1st inhibited
41	25	Open or short to ground, K solenoid circuit	No	K solenoid operation inhibited
41	26	Open or short to ground, N solenoid circuit	No	Low and 1st inhibited
42	12	Short to battery, A solenoid circuit	Yes	DNS, Lock in a range
42	13	Short to battery, B solenoid circuit	Yes	DNS, Lock in a range
42	14	Short to battery, C	Yes	DNS, Lock in a range

Main Code	Sub Code	Description	Do Not Shift Light	Inhibited Operation Description
		solenoid circuit		
42	15	Short to battery, D solenoid circuit	Yes	DNS, Lock in a range
42	16	Short to battery, E solenoid circuit	Yes	DNS, Lock in a range
42	21	Short to battery, F solenoid circuit	No	Lock-up inhibited
42	22	Short to battery, G solenoid circuit	Yes	DNS, Lock in a range
42	23	Short to battery, H solenoid circuit	No	Retarder allowed, differential lock inhibited
42	24	Short to battery, J solenoid circuit	No	Low and 1st inhibited
42	25	Short to battery, K solenoid circuit	No	K solenoid operation inhibited
42	26	Short to battery, N solenoid circuit	No	Low and 1st inhibited
43	21	Low side driver, F solenoid circuit	No	Lock-up inhibited
43	25	Low side driver, K solenoid circuit	No	K solenoid operation inhibited
43	26	Low side driver, N solenoid circuit	No	Low and 1st inhibited
44	12	Short to ground,A solenoid circuit	Yes	DNS, SOL OFF (Hydraulic default)
44	13	Short to ground,B solenoid circuit	Yes	DNS, SOL OFF (Hydraulic default)
44	14	Short to ground,C solenoid circuit	Yes	DNS, SOL OFF (Hydraulic default)
44	15	Short to ground,D solenoid circuit	Yes	DNS, SOL OFF (Hydraulic default)
44	16	Short to ground,E solenoid circuit	Yes	DNS, SOL OFF (Hydraulic default)
44	21	Short to ground,F solenoid circuit	No	Lock-up inhibited

Main Code	Sub Code	Description	Do Not Shift Light	Inhibited Operation Description
44	22	Short to ground,G solenoid circuit	Yes	DNS, SOL OFF (Hydraulic default)
44	23	Short to ground,H solenoid circuit	No	Retarder allowed. differential lock inhibited
44	24	Short to ground,J solenoid circuit	No	Low and 1st inhibited
44	25	Short to ground,K solenoid circuit	No	K solenoid operation inhibited
44	26	Short to ground,N solenoid circuit	No	Low and 1st inhibited
45	12	Open circuit,A solenoid circuit	Yes	DNS, SOL OFF (Hydraulic default)
45	13	Open circuit,B solenoid circuit	Yes	DNS, SOL OFF (Hydraulic default)
45	14	Open circuit,C solenoid circuit	Yes	DNS, SOL OFF (Hydraulic default)
45	15	Open circuit,D solenoid circuit	Yes	DNS, SOL OFF (Hydraulic default)
45	16	Open circuit,E solenoid circuit	Yes	DNS, SOL OFF (Hydraulic default)
45	21	Open circuit,F solenoid circuit	No	Lock-up inhibited
45	22	Open circuit,G solenoid circuit	Yes	DNS, SOL OFF (Hydraulic default)
45	23	Open circuit,H solenoid circuit	No	Retarder allowed differential lock inhibited
45	24	Open circuit,J solenoid circuit	No	Low and 1st inhibited
45	25	Open circuit,K solenoid circuit	No	K solenoid operation inhibited
45	26	Open circuit,N solenoid circuit	No	Low and 1st inhibited
51	10	Offgoing ratio test (during shift), 1 to L	Yes	Low and 1st inhibited
51	12	Offgoing ratio test (during shift), 1	Yes	DNS, RPR

Main Code	Sub Code	Description	Do Not Shift Light	Inhibited Operation Description
		to 2		
51	21	Offgoing ratio test (during shift), 2 to 1	Yes	DNS, RPR
51	23	Offgoing ratio test (during shift), 2 to 3	Yes	DNS, RPR
51	43	Offgoing ratio test (during shift), 4 to 3	Yes	DNS, RPR
51	45	Offgoing ratio test (during shift), 4 to 5	Yes	DNS, RPR
51	65	Offgoing ratio test (during shift), 6 to 5	Yes	DNS, RPR
52	01	Offgoing C3PS test (during shift), L to 1	Yes	DNS, RPR
52	08	Offgoing C3PS test (during shift), L to N1	Yes	DNS, NNC
52	32	Offgoing C3PS test (during shift), 3 to 2	Yes	DNS, RPR
52	34	Offgoing C3PS test (during shift), 3 to 4	Yes	DNS, RPR
52	54	Offgoing C3PS test (during shift), 5 to 4	Yes	DNS, RPR
52	56	Offgoing C3PS test (during shift), 5 to 6	Yes	DNS, RPR
52	71	Offgoing C3PS test (during shift), R to 1	Yes	DNS, NNC
52	72	Offgoing C3PS test (during shift), R to 2	Yes	DNS, NNC
52	78	Offgoing C3PS test (during shift), R to N1	Yes	DNS, NNC
52	79	Offgoing C3PS test (during shift), R to 2 (R to NNC to 2)	Yes	DNS, NNC
52	99	Offgoing C3PS test (duringshift), N3 to N2	Yes	DNS, RPR
53	08	Offgoing speed test (during shift), L to N1	Yes	DNS, NNC

Main Code	Sub Code	Description	Do Not Shift Light	Inhibited Operation Description
53	18	Offgoing speed test (during shift), 1 to N1	Yes	DNS, NNC
53	28	Offgoing speed test (during shift), 2 to N1	Yes	DNS, NNC
53	29	Offgoing speed test (during shift), 2 to N2	Yes	DNS, RPR
53	38	Offgoing speed test (during shift), 3 to N1	Yes	DNS, NNC
53	39	Offgoing speed test (during shift), 3 to N3	Yes	DNS, RPR
53	48	Offgoing speed test (during shift), 4 to N1	Yes	DNS, NNC
53	49	Offgoing speed test (during shift), 4 to N3	Yes	DNS, RPR
53	58	Offgoing speed test (during shift), 5 to N1	Yes	DNS, NNC
53	59	Offgoing speed test (during shift), 5 to N3	Yes	DNS, RPR
53	68	Offgoing speed test (during shift), 6 to N1	Yes	DNS, NNC
53	69	Offgoing speed test (during shift), 6 to N4	Yes	DNS, RPR
53	78	Offgoing speed test (during shift), R to N1	Yes	DNS, NNC
53	99	Offgoing speed test (during shift), N2 to N3 or N3 to N2	Yes	DNS, RPR
54	01	Oncoming ratio test (after shift), L to 1	Yes	DNS, RPR
54	07	Oncoming ratio test (after shift), L to R	Yes	DNS, NNC
54	10	Oncoming ratio test (after shift), 1 to L	Yes	DNS, RPR
54	12	Oncoming ratio test (after shift), 1 to 2	Yes	DNS, RPR
54	17	Oncoming ratio test (after shift),	Yes	DNS, NNC

Main Code	Sub Code	Description	Do Not Shift Light	Inhibited Operation Description
		1 to R		
54	21	Oncoming ratio test (after shift), 2 to 1	Yes	DNS, RPR
54	23	Oncoming ratio test (after shift), 2 to 3	Yes	DNS, RPR
54	27	Oncoming ratio test (after shift), 2 to R	Yes	DNS, NNC
54	32	Oncoming ratio test (after shift), 3 to 2	Yes	DNS, RPR
54	34	Oncoming ratio test (after shift), 3 to 4	Yes	DNS, RPR
54	43	Oncoming ratio test (after shift), 4 to 3	Yes	DNS, RPR
54	45	Oncoming ratio test (after shift), 4 to 5	Yes	DNS, RPR or SOL OFF (Hydraulic default)
54	54	Oncoming ratio test (after shift), 5 to 4	Yes	DNS,RPR
54	56	Oncoming ratio test (after shift), 5 to 6	Yes	DNS,RPR
54	65	Oncoming ratio test (after shift), 6 to 5	Yes	DNS,RPR
54	70	Oncoming ratio test (after shift), R to L	Yes	DNS,NNC
54	71	Oncoming ratio test (after shift), R to 1	Yes	DNS,NNC
54	72	Oncoming ratio test (after shift), R to 2	Yes	DNS,NNC
54	80	Oncoming ratio test (after shift), N1 to L	Yes	DNS,RPR
54	81	Oncoming ratio test (after shift), N1 to 1	Yes	DNS,RPR
54	82	Oncoming ratio test (after shift), N1 to 2	Yes	DNS,RPR
54	83	Oncoming ratio test (after shift), N1 to 3	Yes	DNS,RPR

Main Code	Sub Code	Description	Do Not Shift Light	Inhibited Operation Description
54	85	Oncoming ratio test (after shift), N1 to 5	Yes	DNS,RPR
54	86	Oncoming ratio test (after shift), Nl to 6	Yes	DNS, RPR
54	92	Oncoming ratio test (after shift), R to 2 (R to NNC to 2)	Yes	DNS, NNC
54	92	Oncoming ratio test (after shift), N1 to 2 (N1 to NNC to 2)	Yes	DNS, RPR
54	92	Oncoming ratio test (after shift), N2 to 2	Yes	DNS, RPR
54	93	Oncoming ratio test (after shift), N3 to 3	Yes	DNS, RPR
54	95	Oncoming ratio test (after shift), N3 to 5	Yes	DNS, RPR
54	96	Oncoming ratio test (after shift), N4 to 6	Yes	DNS, RPR
54	97	Oncoming ratio test (after shift), 2 to R (2 to NNC to R)	Yes	DNS, NNC
55	17	Oncoming C3PS test (after shift), 1 to R	Yes	DNS, NNC
55	27	Oncoming C3PS test (after shift), 2 to R	Yes	DNS, NNC
55	80	Oncoming C3PS test (after shift), N1 to L	Yes	DNS, RPR
55	87	Oncoming C3PS test (after shift), N1 to R	Yes	DNS, RPR
55	97	Oncoming C3PS test (after shift), 2 to R or NVL to R (2 to NNC to R)	Yes	DNS, NNC
56	00	Range verification test, L	Yes	DNS, 1st, Low, or SOL OFF (Low)
56	11	Range verification test, 1st	Yes	DNS, 6th
56	22	Range verification test, 2nd	Yes	DNS, 6th or 5th
56	33	Range verification test, 3rd	Yes	DNS, 5th or SOL
56	44	Range verification test, 4th	Yes	DNS, 3rd or 5th

Main Code	Sub Code	Description	Do Not Shift Light	Inhibited Operation Description
56	55	Range verification test, 5th	Yes	DNS, SOL OFF (5th) or 3rd
56	66	Range verification test, 6th	Yes	DNS, 5th, 3rd, or SOL OFF (3rd)
56	77	Range verification test, R	Yes	DNS, N2 or N3
57	11	Range verification C3PS test, 1st	Yes	DNS, SOL OFF (3rd)
57	22	Range verification C3PS test, 2nd	Yes	DNS, 3rd
57	44	Range verification C3PS test, 4th	Yes	DNS, 5th or SOL OFF (3rd)
57	66	Range verification C3PS test, 6th	Yes	SOL OFF (5th), DNS
57	88	Range verification C3PS test, N1	Yes	DNS, N3
57	99	Range verification C3PS test, N2 or N4	Yes	DNS, N3
61	00	Retarder oil temperature, hot	No	None
62	12	Retarder oil temperature sensor, low	No	None
62	23	Retarder oil temperature sensor, high	No	None
63	00	Special function input	No	Depends on special function
64	12	Retarder modulation request sensor, low	No	Retarder operation inhibited
64	23	Retarder modulation request sensor, high	No	Retarder operation inhibited
65	00	Engine rating too high	Yes	DNS
66	00	Serial communications interface fault	No	Use default throttle values
69	12	ECU, A solenoid driver open	Yes	DNS, SOL OFF (hydraulic default)
69	13	ECU, B solenoid driver open	Yes	DNS, SOL OFF (hydraulic default)
69	14	ECU, C solenoid driver open	Yes	DNS, SOL OFF (hydraulic default)
69	15	ECU, D solenoid driver open	Yes	DNS, SOL OFF (hydraulic default)

Main Code	Sub Code	Description	Do Not Shift Light	Inhibited Operation Description
69	16	ECU, E solenoid driver open	Yes	DNS, SOL OFF (hydraulic default)
69	21	ECU, F solenoid driver open	No	Lock-up inhibited
69	22	ECU, G solenoid driver open	Yes	DNS, SOL OFF (Hydraulic default)
69	23	ECU, H solenoid driver open	No	Retarder allowed, differential lock inhibited
69	24	ECU, J solenoid driver open	No	Low and 1 st inhibited
69	25	ECU, K solenoid driver open	No	K solenoid operation inhibited
69	26	ECU, N solenoid driver open	No	Low and 1st inhibited
69	32	ECU, SPI communications link fault	No	Hold in last valid direction
69	33	ECU, Central Operating Processor (COP) timeout	Yes	Reset ECU, Shutdown ECU on 2nd occurrence (power loss: hydraulic defaults)
69	34	ECU, EEPROM write timeout	Yes	DNS, SOL OFF (Hydraulic default)
69	35	ECU, EEPROM checksum	Yes	Induce COP timeout (reset ECU)
69	36	ECU, RAM self test	Yes	Induce COP timeout (reset ECU)
69	41	ECU, I/O ASIC addressing test	Yes	Induce COP timeout (reset ECU)
70	35	Software, minor loop overrun	Yes	Induce COP timeout (reset ECU)
70	35	Software, illegal write to access $0000	Yes	Induce COP timeout (reset ECU)
70	35	Software, major loop overrun	Yes	Induce COP timeout (reset ECU)

11. SPECIFICATIONS

AUTOMATIC TRANSMISSION WITH OR WITHOUT RETARDER

Gross input power (maximum) ..... 450 hp (335 kW)
Gross input torque (maximum)..... 1460 lbf•ft (1978 N•m)
Rated input speed (minimum-maximum)..... 1600-2300 rpm

Mounting
Engine..... SAE #1 flywheel housing, flex disk drive

Torque converter
Type..... One stage, three element, polyphase
Stall torque ratio..... TC 521-2.4;TC 531-2.3;TC 541-1.9;TC 551-1.8;TC 561-1.6
Lockup clutch with torsional damper..... Integral/standard

Gearing

Type	Patented, constant mesh, helical, planetary
	Ratio*
First	3.51:1
Second	1.91:1
Third	1.43:1
Fourth	1.00:1
Fifth	0.74:1
Sixth	0.64:1
Reverse	4.80:1

Ratio coverage
6 speed..... 5.48:1

* Gear ratios do not include torque converter multiplication.

Oil System
Oil type..... DEXRON-IIE OR DEXRON III
Capacity (excluding external circuits)..... Initial fill 47 US qts (45 liters)
Oil change..... 37 US qts (39 liters)

Oil Filters
Make..... Allison Transmission
Type..... Disposable cartridge
Supplier number..... 29503829
Prévost number..... 571687

MANUAL TRANSMISSION

SIX-SPEED

Make ..... Spicer
Model PS130-6B
Ratio:

LO	8.53:1
1st	4.87:1
2nd	3.00:1
3rd	1.90:1
4th	1.33:1
5th	1.00:1
Rev	8.53:1

Fluid:
Type ..... Same as engine oil
Capacity ..... 41 Pints (19.4 liters) at 0° Installation
Torque Capacity ..... 1300 lbf•ft (1761 N•m)

SEVEN-SPEED

Make ..... Spicer
Model PS145-7A
Ratio:

LO	10.13:1
1st	5.99:1
2nd	3.56:1
3rd	2.57:1
4th	1.84:1
5th	1.33:1
6th	1.00:1
Rev	10.13:1

Fluid:
Type ..... Same as engine oil
Capacity ..... 48 Pints (22.7 liters) at 0° Installation
Torque Capacity ..... 1450 lbf•ft (1964 N•m)

SERVICE MANUAL

SPICER®

HEAVY DUTY

SST-2

6 SPEED

TRANSMISSION

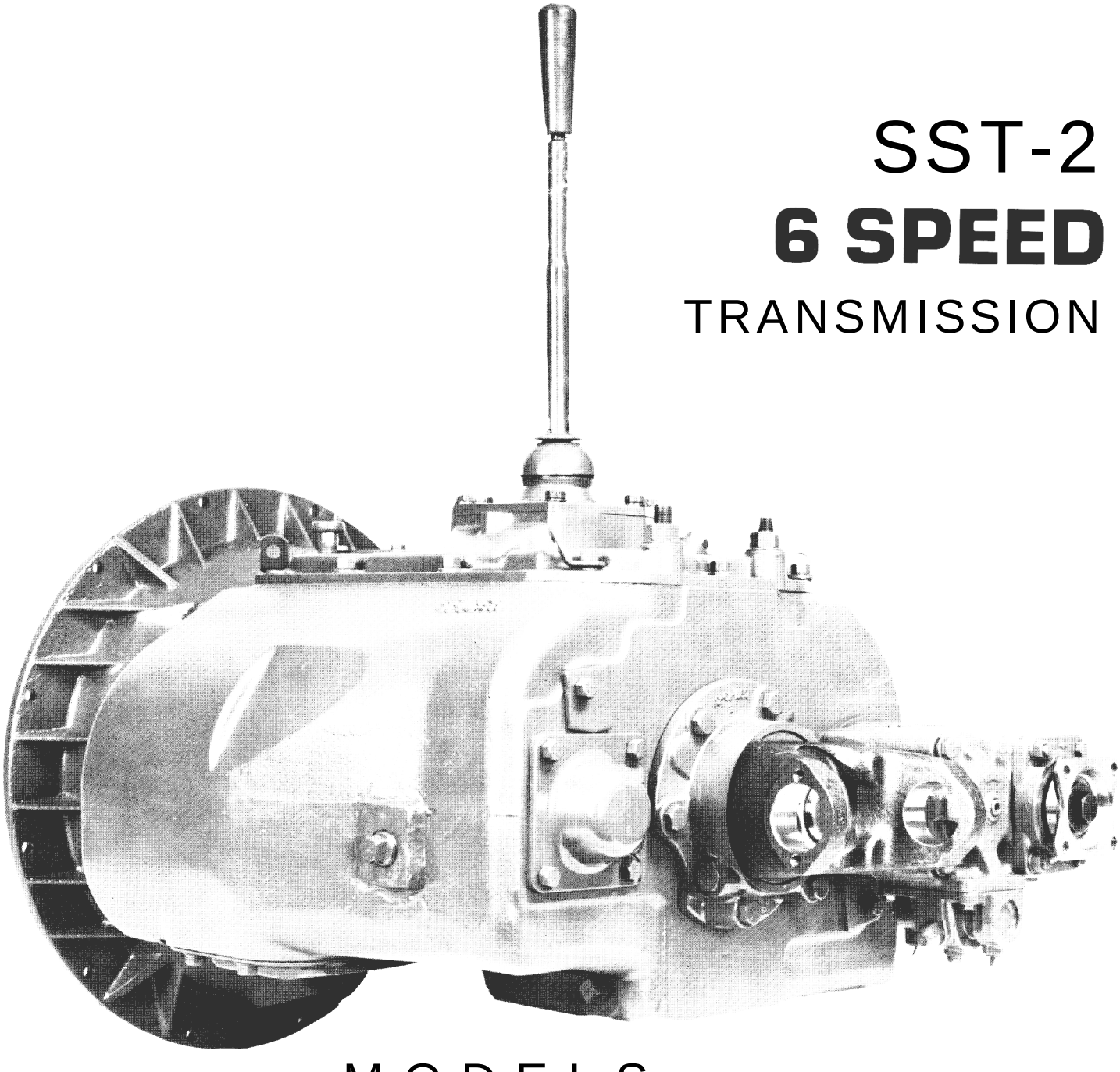

MODELS

1362-A, **1362-B, 1362-C, 1364-C, 1463-A**

SERVICE MANUAL

SPICER®

HEAVY DUTY

SST-2

6 SPEED

TRANSMISSION

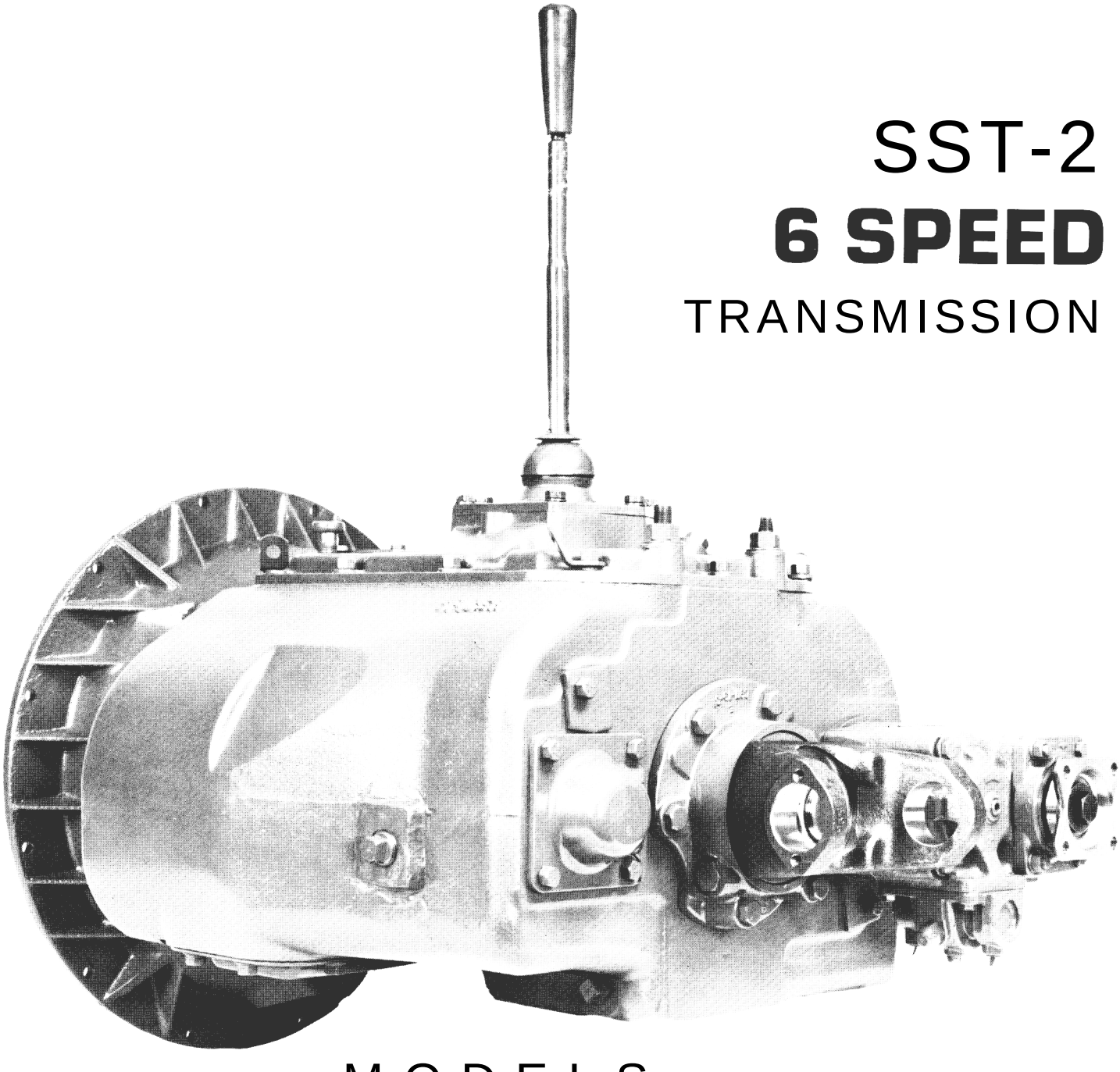

MODELS

1362-A, **1362-B, 1362-C, 1364-C, 1463-A**

SERVICE MANUAL

SPICER®

HEAVY DUTY

7 SPEED

TRANSMISSIONS

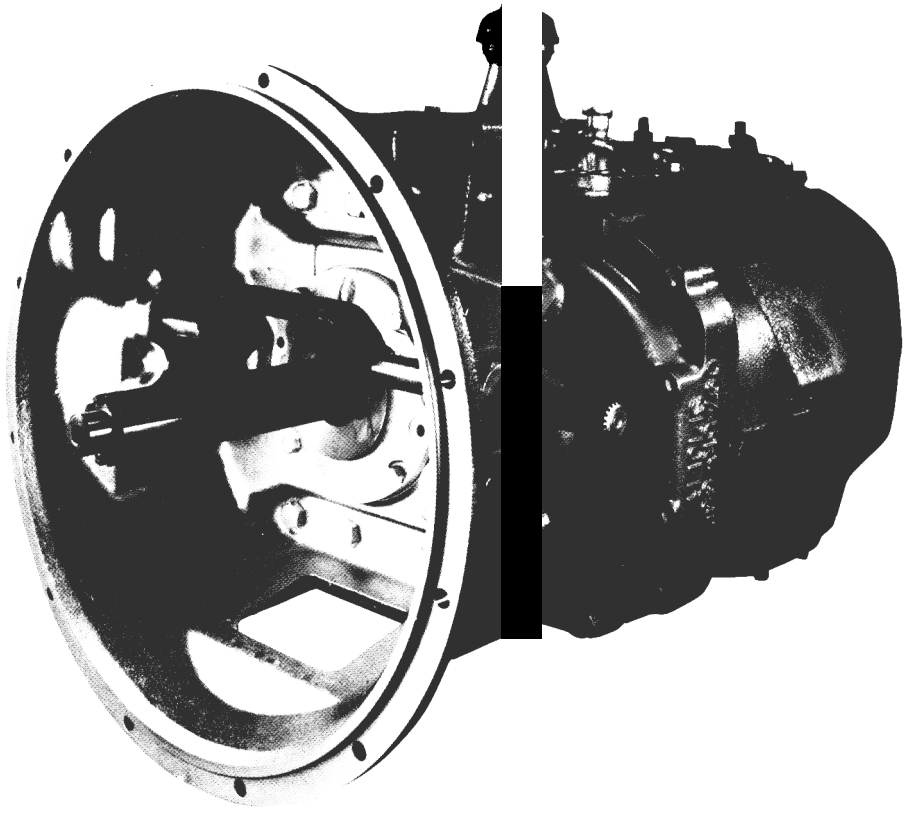

MODELS PS140-7A
& PS125=7B

SPICER®

DANA

TABLE OF CONTENTS

PAGE

SECTION I – GENERAL INFORMATION
SPECIFICATIONS 2
SHIFTING PROCEDURES 3

SECTION II – MAINTENANCE
LUBRICATION 4
GENERAL DISASSEMBLY PRECAUTIONS 5
TOOL REFERENCE 6

SECTION III – CONTROLS
SHIFT TOWER 7
REMOTE CONTROL 8

SECTION IV – SHIFTER HOUSING
EXPLODED DRAWING –FORWARD CONTROL 9
EXPLODED DRAWING –CENTER CONTROL 10
DISASSEMBLY 11
REASSEMBLY 12

SECTION V – GEARS & CASE DISASSEMBLY
EXPLODED DRAWING –CASE 13
DISASSEMBLY 14

SECTION VI – MAINSHAFT DISASSEMBLY & REASSEMBLY
EXPLODED DRAWING – MAINSHAFT 19
DISASSEMBLY 20
REASSEMBLY 22

SECTION VII – INSPECTION PROCEDURES & TORQUE SPECIFICATIONS 24

SECTION VIII – COUNTERSHAFT DISASSEMBLY & REASSEMBLY 25

SECTION IX – INPUT GEAR DISASSEMBLY & REASSEMBLY 26

SECTION X – GEARS & CASE REASSEMBLY 27

SECTION XI – TROUBLESHOOTING 31

SPECIFICATIONS

Spicer Seven Speed

MODELS PS140-7A & PSI 25-7B

PS 140-7A			PS125-7B		
Gear	Ratio	% Step	Gear	Ratio	% Step
1	10.13	6 9	1	12.27	7 5
2	5.99	6 8	2	7.00	6 9
3	3.56	3 9	3	4.13	6 3
4	2.57	4 0	4	2.54	3 8
5	1.84	3 8	5	1.84	3 8
6	1.33	3 3	6	1.33	3 3
7	1.00		7	1.00	
R	10.13		R	12.27	

Speeds:	**7 Forward, 1 Reverse**
Torque Capacity:	**PS140-7A 950-1400 lbs. ft. (1 290-1900 Nm)**
	PS125-7B 950-1250 lbs. ft, (1 290-1700 Nm)
Length:	**30.75" (781.05 mm)**
Weight:	**626 lbs. (284 kg)**
End Yokes:	**1710 6-4-7691 1760 6.3-4-1251 1810 6.5-4-3821**
Flanges:	**1710 6-1-5821**
Clutch:	**14" or 15½" (355.6 or 393.70 mm) 2-Plate**
Clutch Housing:	**S.A. E. Nos. 1 or 2 Nodal Mount Standard**
Oil Capacity:	**48 Pints (22.7 Liters) at 0° Installation**
Drive Gear:	**2" Standard**
Power Take-Off:	**6 Bold right and lower left. Countershaft P.T.O. provision, standard on the right side, optional on the left.**

SHIFT PATTERN
PS140-7A & PSI 25-7B

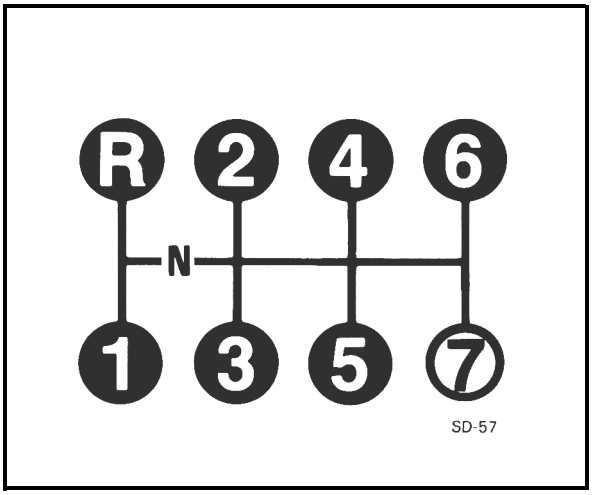

How to Shift Spicer Models PS140-7A & PS125-7B

Your vehicle has been equipped with the Spicer 7-Speed transmission. The Spicer 7-speed has seven forward speeds, engineered to make full use of engine output and to improve fuel economy, This single stick transmission has seven lever positions with no splitter or range necessary to provide superior performance. Here's how this transmission is designed to work for you in the driver's seat.

Starting

With the engine idling, depress the clutch and move stick into first gear. Gradually release the clutch and accelerate the engine to governed speed (1900-1950 RPM).

NOTE –A clutch brake is used to stop gear rotation to complete a shift into first or reverse when the vehicle is stationary. If a butt-toothed condition exists between the clutching teeth, a momentary re-engagement of the main clutch will allow the gear train to move into a smooth engagement.

NOTE – *The clutch brake on this transmission is actuated by depressing the clutch pedal all the way to the floor. For normal upshifts and downshifts, only a partial disengagement of the clutch is necessary to break engine torque.*

Upshifting

Once governed engine speed has been attained, to shift into second gear, depress the clutch and move the stick to neutral. Engage the clutch and allow RPM to drop approximately 750. (RPM drop may vary with engines of different governed speeds) *, depress the clutch and move the stick into second gear. Re-engage the clutch and accelerate to governed speed. Continue upshifting through seventh gear in this manner.

Downshifting

When downshifting from seventh gear, allow RPM to drop approximately 475*, depress clutch pedal and move stick to neutral. Engage the clutch, accelerate to governed speed, depress the clutch and move the stick into sixth gear, then re-engage the clutch. Continue downshifting through first gear in this manner.

***NOTE–All RPM drops are based on the PSI 40-7A and PS 125-7B transmission ratios and an engine governed speed of 1900-1950 RPM. These drops will vary with other transmission ratios or with engines of higher governed speeds.**

OPERATION

Clutches

A clutch brake is required for use with this transmission. It is recommended that the torque limiting clutch brake be used instead of the three-piece type. Attention is called to the fact that Spicer 14" and 15%" 2-plate clutch service manuals (Bulletins 1308 and 1309) are available for the asking, and contain complete information on all Spicer Heavy Duty Clutches.

Replacement Parts

The exploded views of subassemblies which are incorporated here are for the mechanic's convenience and show the latest material. The parts are arranged in their correct order and may also be used as a reference for assembly or disassembly of this unit.

Power Flow

The Spicer split torque transmission is designed for medium and heavy duty, on and off highway applications.

The two countershaft design allows the engine torque to be equally divided between the two countershafts. This provides a high ratio of torque capacity to transmission weight. This also allows a reduction in the face width of each gear involved in the transmission. All the gears are in constant mesh through spur teeth.

Spicer" Transmission Lubrication

To insure proper lubrication and operating temperatures in these units it IS most Important that the proper lubricants be used and that correct 011 levels be maintained

Recommended Lubricants

The lubricants listed below are recommended, in order of preference, for use in all Spicer mechanical transmissions, auxiliaries and transfer cases.

Oil Changes

We recommend an initial oil change and flush after the transmission is placed in *actual* service. This change should be made anytime following 3000 miles (4827 km), but *should not exceed 5000* miles (8045 km), of over-the-road service. In off-highway use, the change should be made after 24 and before 100 hours of service have elapsed. There are many factors that influence the following oil change periods, and we have not specified a definite mileage interval,

In general, it IS suggested that a drain and flush period be scheduled every 50,000 miles (80,450 km) for normal over-the-highway operations. Off-highway usually requires oil change every 1000 hours. The oil level in the transmission should be checked every 5000 miles (8045 km) on-highway, or every 40 hours in off-highway operation. When it is necessary to add oil, we recommend that types or brands of oil should not be mixed. The correct oil level in ail Spicer transmissions is established by the filler plug opening.

Refill

First, remove all dirt around the fliler plug Then refill with new oil of grade recommended for the existing season and prevailing service Fill to the bottom of the level testing plug positioned on the side of the transmission.

Overfilling

DO NOT OVERFILL the transmission. Overfilling usually results in oil breakdown because of excessive heat and aeration from the churning action of the gears. Early breakdown of the oil will result in heavy varnish and sludge deposits that plug up oil ports and build up on splines and bearings. Overflow of oil escapes onto clutch or parking brakes causing additional trouble.

NON-SYNCHRONIZED TRANSMISSION RECOMMENDED LUBRICANTS

The following lubricants are recommended, in order of preference.

TEMPERATURE	GRADE	TYPE
Above O°F (– 18°C) Below O°F (– 18°C)	SAE 30, 40, or 50 SAE 30	Heavy Duty Engine Oil meeting MIL-L-2104D or MIL-L-46152 B, API-SF or API-CD (MIL-L-2104 B & C, or 46152 are also acceptable)
Above O°F (–18°C) Below O°F (–18°C)	SAE 90 SAE 80	Straight Mineral Gear Oil R & O Type API-GL-1
Above O°F (– 18°C) Below O°F (– 18°C)	SAE 90 SAE 80	*Mild EP Gear Oil MIL-L-2105 or API-GL-4
All	CD SAE 50 CD SAE 30	Synthetic Engine Oil meeting MIL-L-2104 D or MIL-L-46152 B, API-SF or API-CD
All	EP SAE 75W90 EP SAE 75W140	*Synthetic Gear Oil meeting MIL-L-2105C or API-GL5

*EP Gear Oils are not recommended when lubricant operating temperatures are above 230°F (110°C).

General Precautions for Disassembly

IMPORTANT

Read this section before starting the detailed disassembly procedure.

Follow each procedure closely in each section, making use of both the text and the pictures.

Rebuild Facilities

A suitable holding fixture or overhaul stand is desirable, but not necessary, to rebuild this unit, The flat bottom of the transmission case provides a suitable working platform when the unit is placed on a sturdy shop table.

For easier working conditions, table height should be 28-30 inches. A light chain hoist should be used to handle the mainshaft and countershafts during removal and reassembly procedures.

Cleanliness

Transmissions should be steam cleaned prior to disassembly, Seal all openings before steam cleaning to prevent entry of dirt and water which can damage serviceable parts

Dirt is abrasive and will cause premature wear of bearings and other parts. We suggest that mechanics have a small wash tank to clean parts just prior to reassembly.

Front Bearing Retainer & Seal

When installing the front bearing retainer and seal to the transmission, the following precautions must be used.

Bearings

When a transmission is removed at relatively low mileage, bearings should be removed with pullers designed for this purpose. Wrap the bearings to keep out dirt. Clean, inspect and lubricate all bearings just prior to reassembly. If accumulated mileage is over 150,000 miles, we suggest that all bearings be replaced.

End Yokes and Flanges

Hammering on end yokes and flanges to remove or install them is not only destructive to the yoke or the flange itself, but can also cause serious Internal damage, Hammering destroys or mutilates the pilot diameters and warps or bends the flange. Hammering on end yokes will close-in the bearing bores or misalign yoke lugs and result in early failures of journal needle bearings, etc.

Serious damage can be done Internally to bearings, thrust faces and washes, pilot bearings, etc., by hammering on external parts In most designs when the yoke/flange locknuts are tightened and secure, the Internal bearings and gears are in proper location. When the yoke/flange is driven on the shaft, two conditions can exist.

(a) If the bearing fit *is tight* on the shaft, then usually the bearings will brinell as they must absorb the pounding force

(b) If the bearing IS loose, the shaft will keep moving inward until it IS stopped by the Internal parts such as pilot bearing thrust washers, etc.

Power Take-Off's

Refer to your owner's manual and installation procedures when installing any PTO on your transmission.

CAUTION

Do not tow vehicles equipped with Spicer transmissions without first pulling the axle shafts or disconnecting the drive shaft. Lubrication of the internal gear train is inadequate when the vehicle is towed. Also, do not pull or roll start vehicles in first or reverse gears.

INSTALL SEAL DRY

WARNING

RED SLEEVE MUST BE USED TO PREVENT SERIOUS DAMAGE TO OIL SEAL WHEN ASSEMBLING BEARING CAP. FAILURE TO COMPLY WILL VOID SEAL WARRANTY.

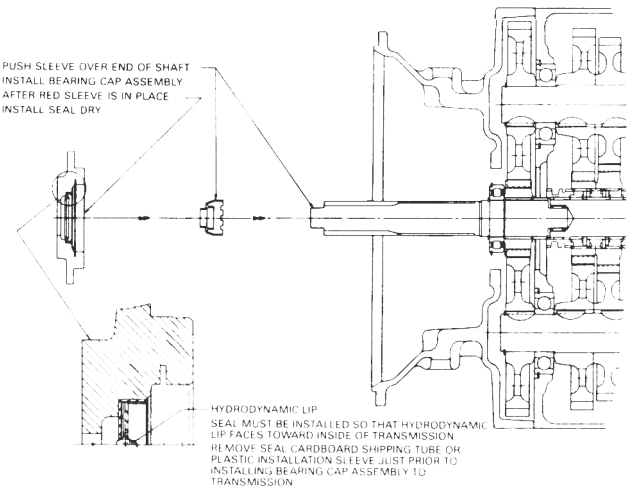

Tool Reference

Tools

Spicer Transmissions can be repaired with ordinary mechanic's hand tools. However this procedure is not only time consuming, but could damage otherwise re-usable parts.

To reduce maintenance costs and vehicle downtime, we recommend using the special tools shown in this section.

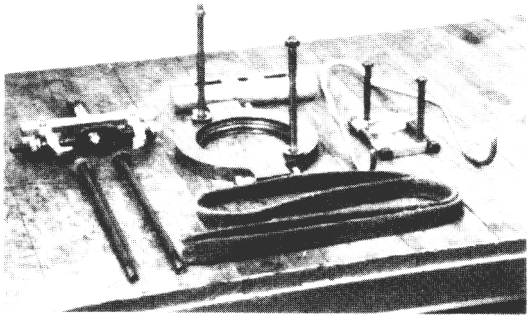

Suggested pullers and alignment tools,

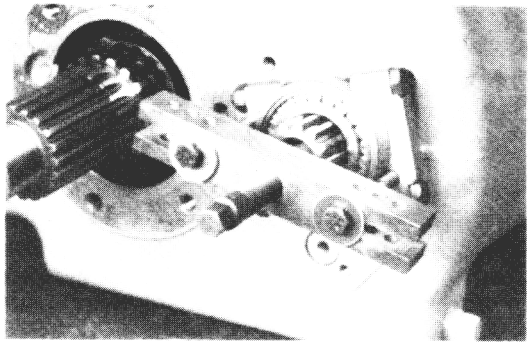

Countershaft rear bearing puller (Snap-on – CJ 950).

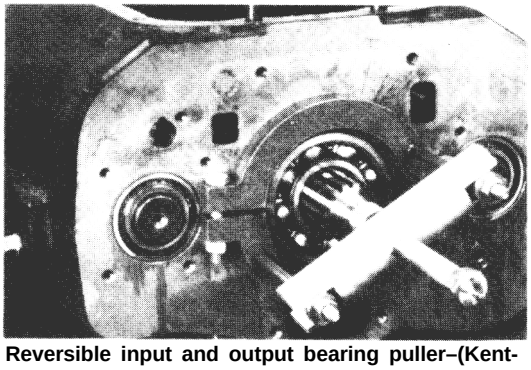

Reversible input and output bearing puller–(Kent-Moore J 24348). Used with end yoke remover (J 7804-01).

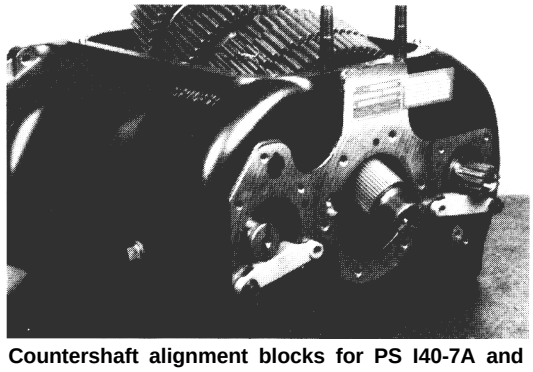

Countershaft alignment blocks for PS I40-7A and PS I25-7B (Kent-Moore J 28720). Provide maximum clearance for mainshaft assembly installation. Allow countershafts to be rotated for timing purposes.

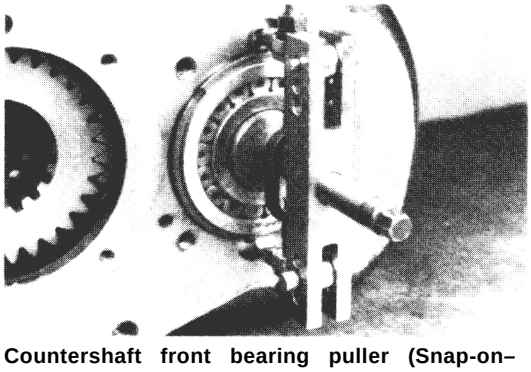

Countershaft front bearing puller (Snap-on– CJ 80).

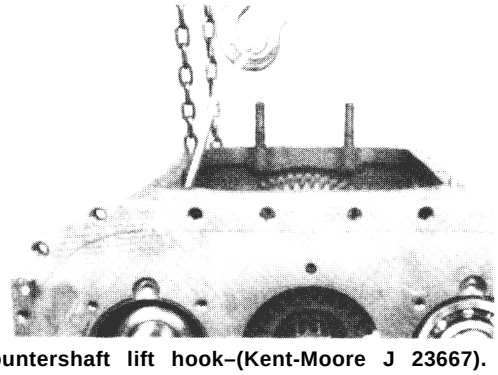

Countershaft lift hook–(Kent-Moore J 23667). Holds countershaft in time while centering the countershaft in the case bore for easier bearing installation.

Tools may be purchased through:
Kent-Moore
29784 Little Mack
Roseville, Michigan 48066-2298
Telephone: 1-800-328-6657

Shift Tower

Disassemble

1. Remove the six retaining capscrews and lockwashers, Separate the dome from the shifter housing and gasket and lift straight up.
2. Position shift lever dome on edge in vise.
3. Pull up grommet. Depress collar against spring and remove lock pin.
4. Slide the compression cup up shift lever and remove rock shaft snap ring.
5. Tap rock shaft free of dome and remove shift lever. Remove seal and discard.
6. Remove shift lever handle and slide grommet, collar, spring and cup off lever.

Inspection

Wash all parts thoroughly and inspect for excessive wear at cross hole in lever and rock shaft. Inspect finger end of lever for excessive wear.

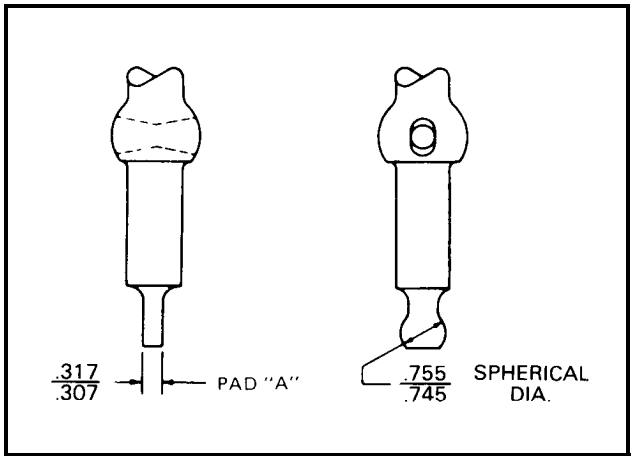

Check spring tension by comparing to a new part

Reassembly

1. Position shift lever dome on edge in vise,
2. Hold shift lever so that cross hole in lever aligns with rock shaft cross holes in dome,
3. Insert rock shaft through hole in dome and cross hole of shift lever.
4. Assemble rock shaft snap ring to groove of dome and lock rock shaft in place,
5. Grease lightly and assemble new seal to shift dome, Grease inner wall of cup and slide over lever into position on dome.
6. Assemble spring, collar and grommet over shift lever, Depress collar and insert lock pin through hole in lever,
7. Assemble shift lever handle,
8. Place shift lever and dome assembly on shifter housing with gasket, noting that finger enters the neutral position notches,
9. Secure with four capscrews and lockwashers.

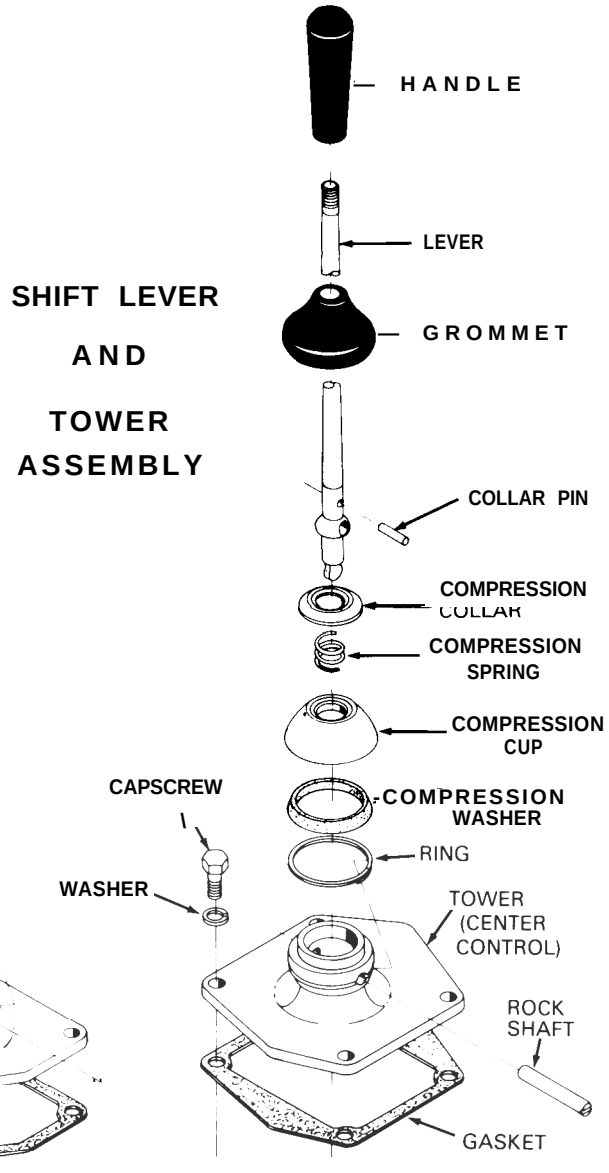

Remote Control Assembly

Disassembly

Remove the capscrews and lockwashers and separate the remote control from the shifter housing.

1. **Remove setscrew from universal joint assembly and pull universal joint from the rod.**
2. **Remove four capscrews and lockwashers holding end cover and gasket in place.**
3. **Remove setscrew from joint shift rod finger and tap rod through cross holes in housing.**
4. **Remove finger from housing.**
5. **Remove setscrew from inner shift finger.**
6. **Slide rod and bracket assembly from inner shift finger.**
7. **Be careful not to lose key from rod or shift finger.**
8. **Remove seals from cross holes in housing.**

Inspection

Check shift fingers for excessive wear. Check all bores and rods for excessive wear or scuffing.

Clean parts thoroughly and apply light coat of grease to pivot points when reassembling.

Assembly

1. **Install new key in rod and bracket assembly and install into remote housng, sliding shift finger (inner) on end of rod.**
2. **Line up setscrew hole and install setscrew, and torque to 40 to 50 lbs. ft.**
3. **Install joint shift rod and through cross holes and through outer finger, making sure finger is inserted into bracket.**
4. **Align setscrew hole and install same. Torque to 40 to 50 tbs. ft.**
5. **Install end cover and secure with four capscrews and lockwashers,**
6. **Install two new oil seals in joint shift rod bores.**
7. **Install joint assembly and secure with setscrew.**

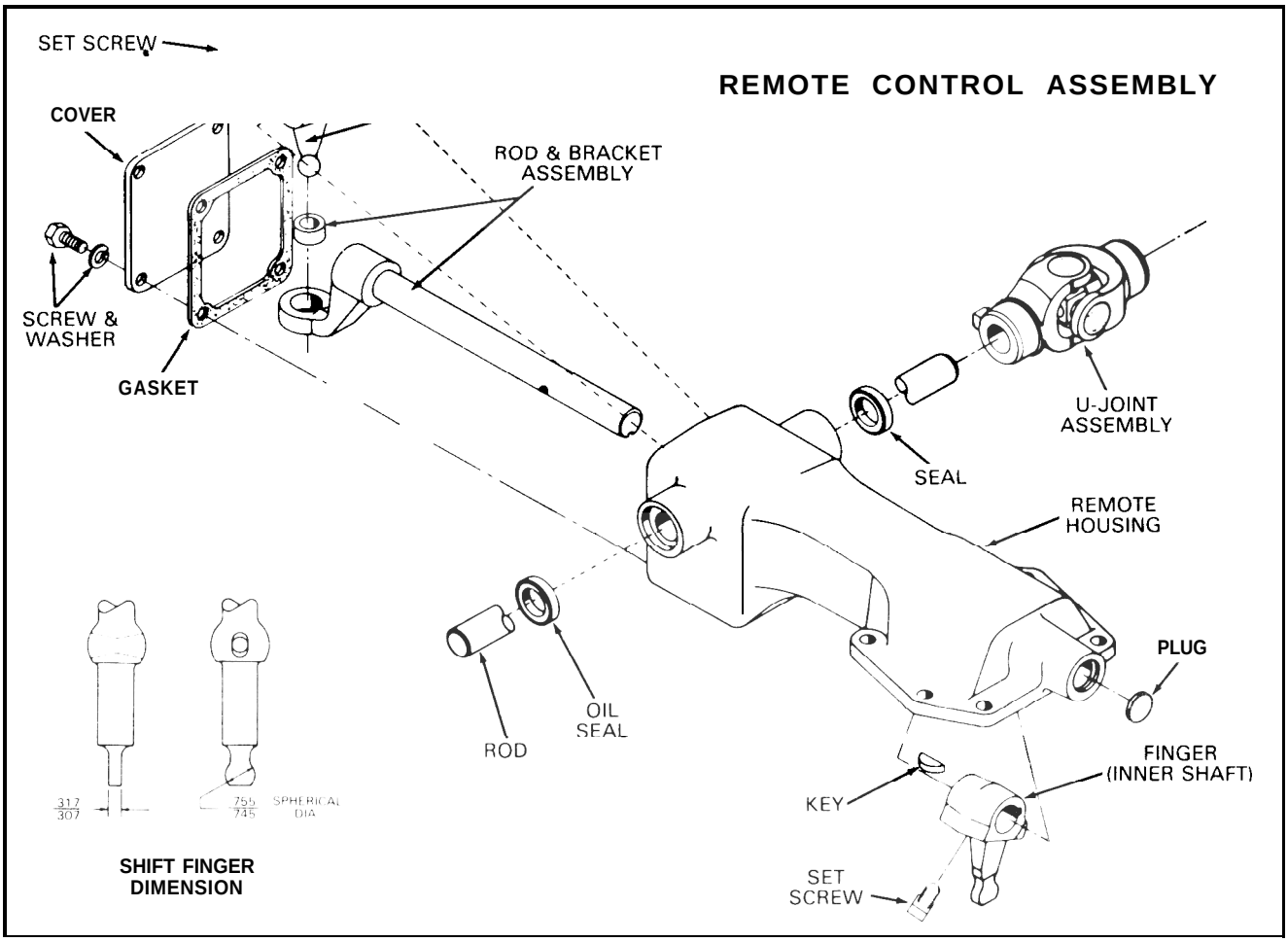

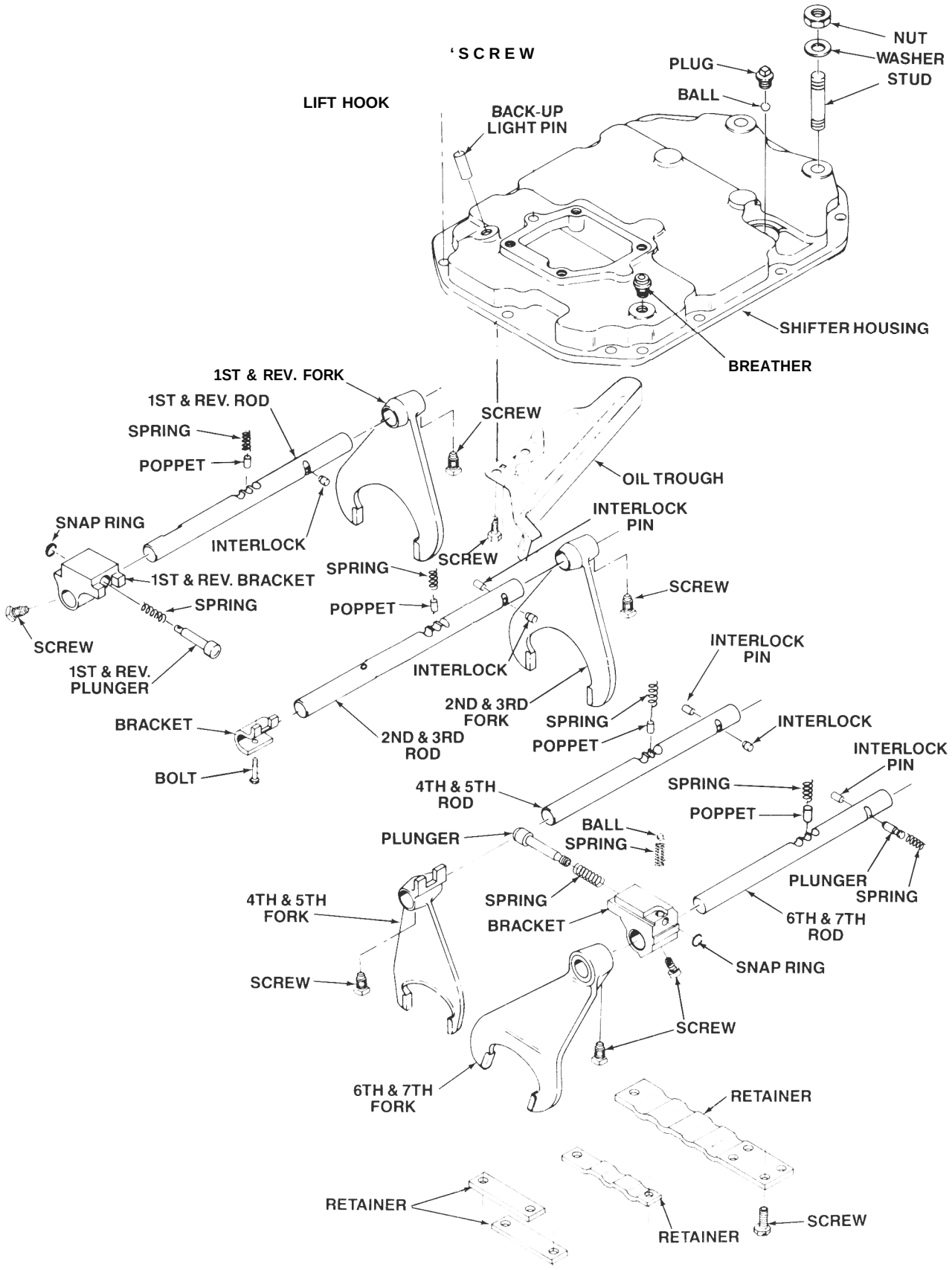
'SCREW
NUT
WASHER
STUD
PLUG
BALL
LIFT HOOK
BACK-UP
LIGHT PIN
SHIFTER HOUSING
BREATHER
1ST & REV. FORK
1ST & REV. ROD
SPRING
POPPET
SCREW
OIL TROUGH
SNAP RING
INTERLOCK
PIN
INTERLOCK
SPRING
SCREW
1ST & REV. BRACKET
SPRING
POPPET
SCREW
SCREW
INTERLOCK
PIN
1ST & REV.
PLUNGER
INTERLOCK
2ND & 3RD
FORK
SPRING
INTERLOCK
BRACKET
2ND & 3RD
ROD
POPPET
INTERLOCK
PIN
BOLT
4TH & 5TH
ROD
SPRING
POPPET
BALL
PLUNGER
SPRING
PLUNGER
SPRING
4TH & 5TH
FORK
SPRING
BRACKET
6TH & 7TH
ROD
SNAP RING
SCREW
SCREW
6TH & 7TH
FORK
RETAINER
RETAINER
RETAINER
SCREW

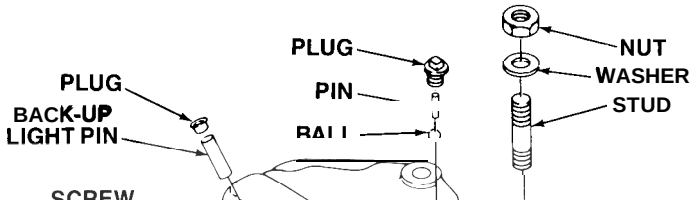

LIFT HOOK

1ST & REV. FORK

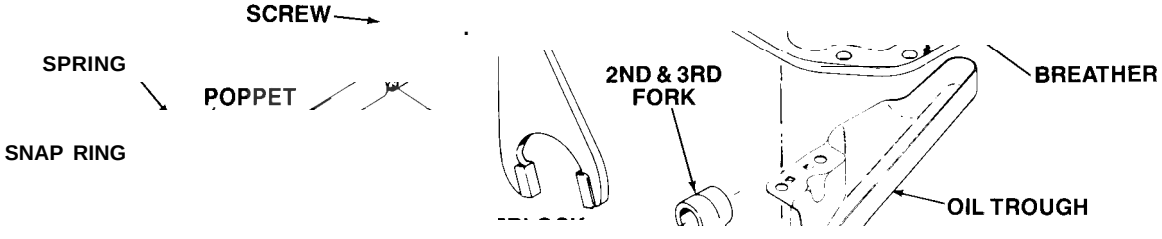

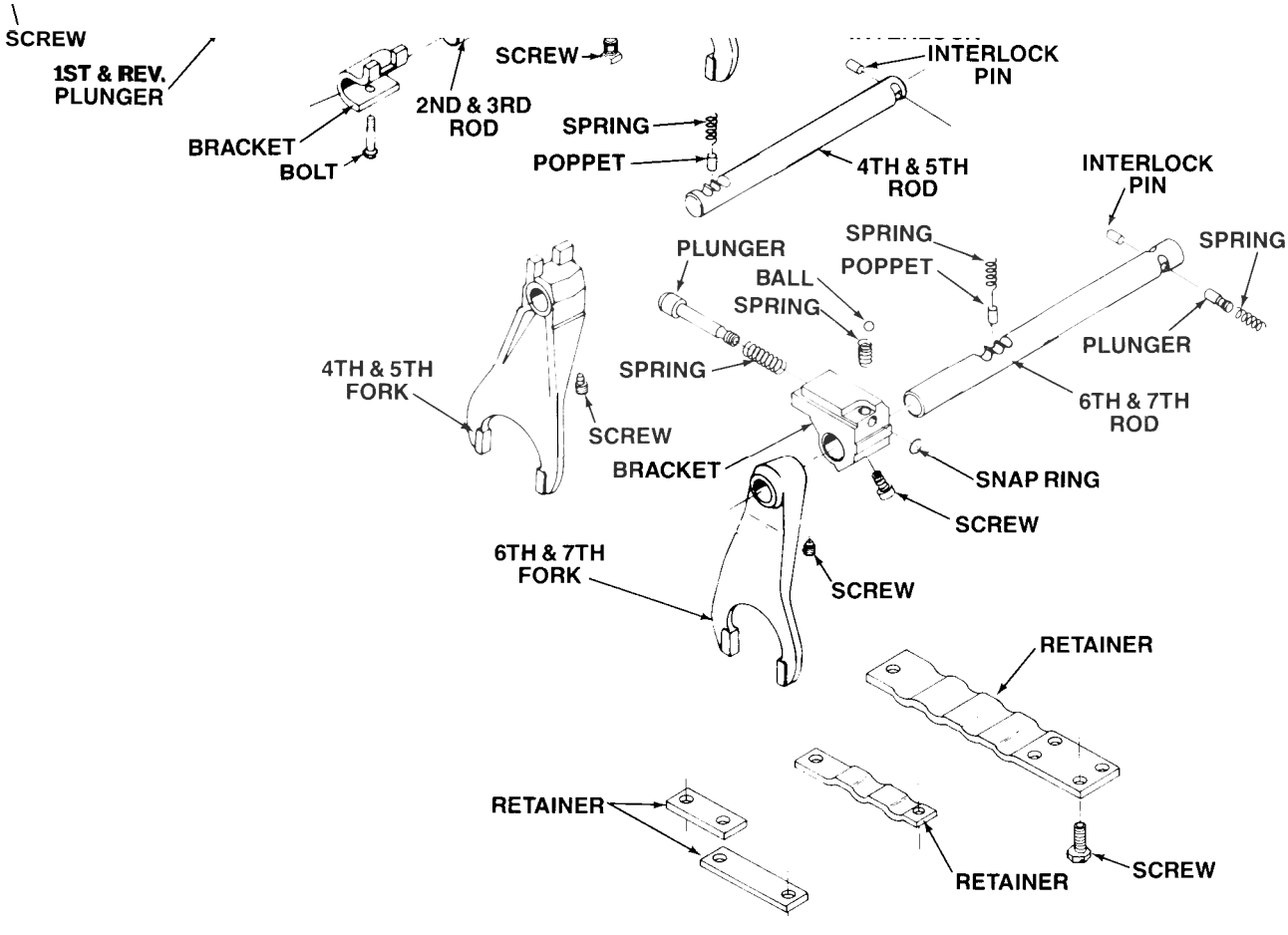

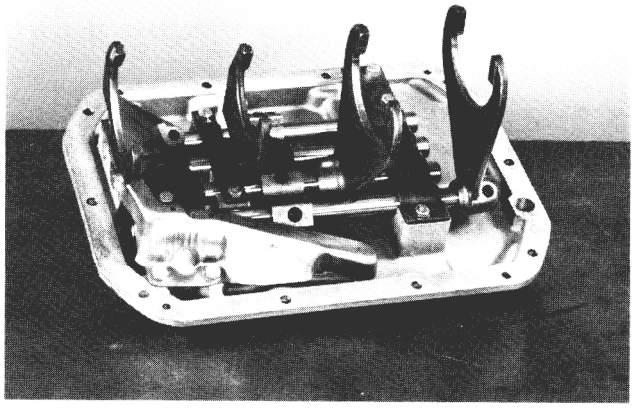

1. Disassembly of the cover begins by placing the cover on a bench with the forks up and in the neutral position.

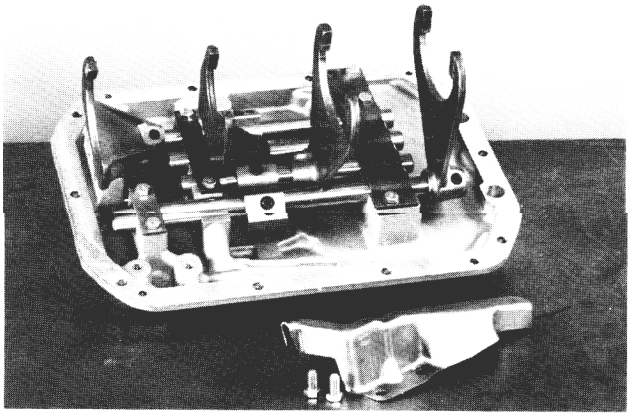

2. Remove the trough. It will make disassembling the rest of the cover easier.

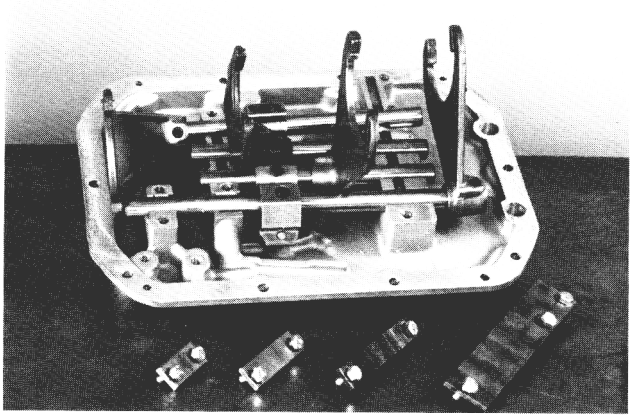

3. Loosen all fork and bracket setscrews, then remove the retainer straps.

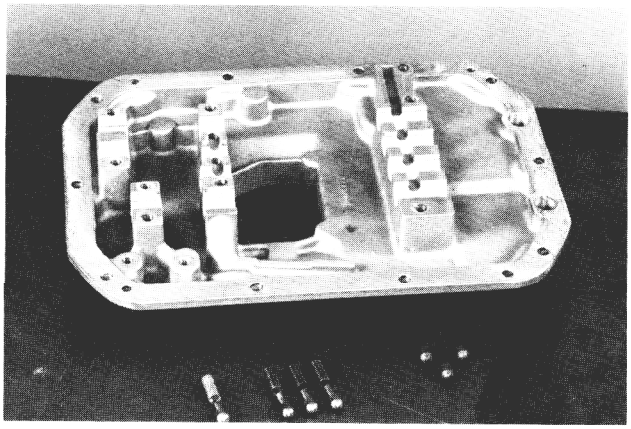

4. All forks lift easily from the cover, Remove the interlocks, poppets and springs. *The first-reverse spring has a different tension than the others, so don 't mix them up.*

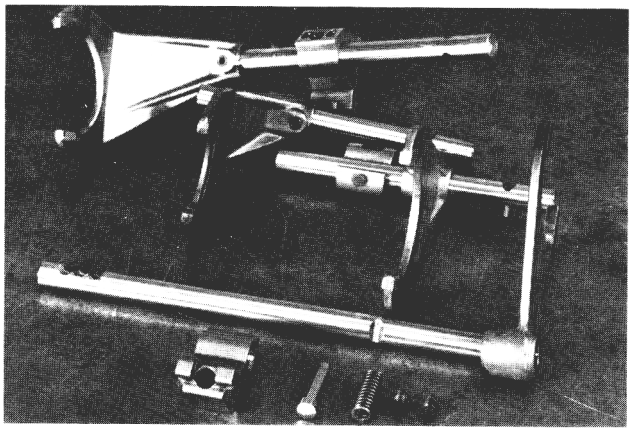

5. Next, disassemble the forks and brackets. Check all parts for wear or damage. Replace them if necessary.

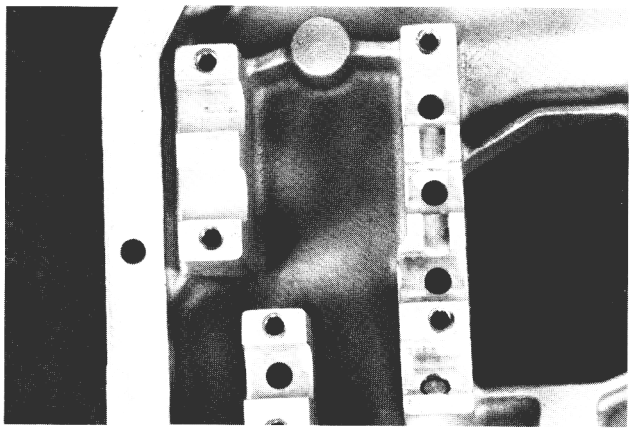

6. Check the poppet and detent holes for burrs or damage.

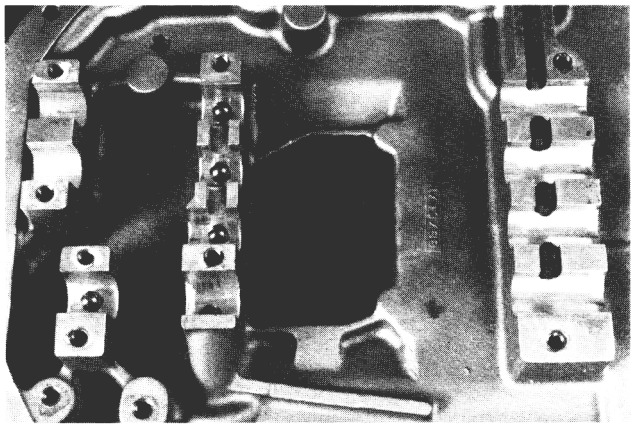

1. Lube all parts prior to reassembly. Clean the cover, then install the springs, poppets and interlocks.

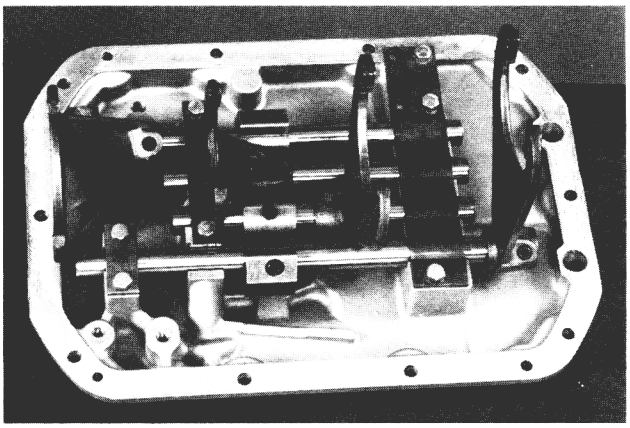

3. Place the fork assemblies into the case. Secure them with the retainer straps. Torque the strap bolts to 34-41 ft. lbs. Move each rod in the cover to confirm that it is moving freely.

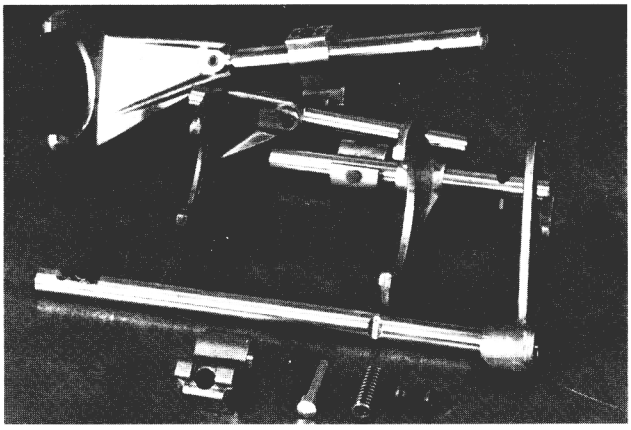

2. Reassemble the forks and brackets. Torque the allenhead setscrews to 26-32 ft. lbs. Torque the second-third bracket screws to 13-18 ft. tbs.

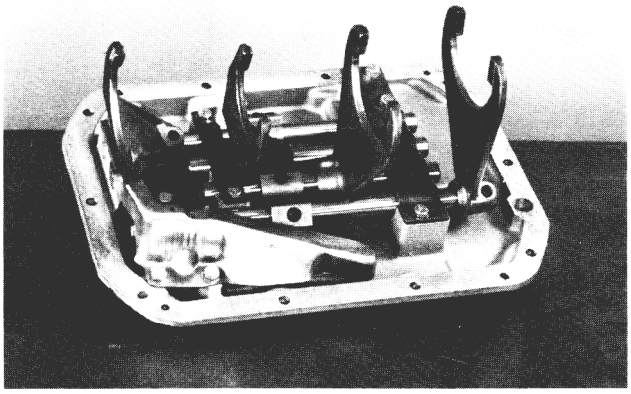

4. Next install the oil trough. Torque the bolts to 34-41 ft. lbs. Check the cover for correct functioning by shifting one fork into gear. If all interlocks were installed correctly, none of the other forks will shift into gear.

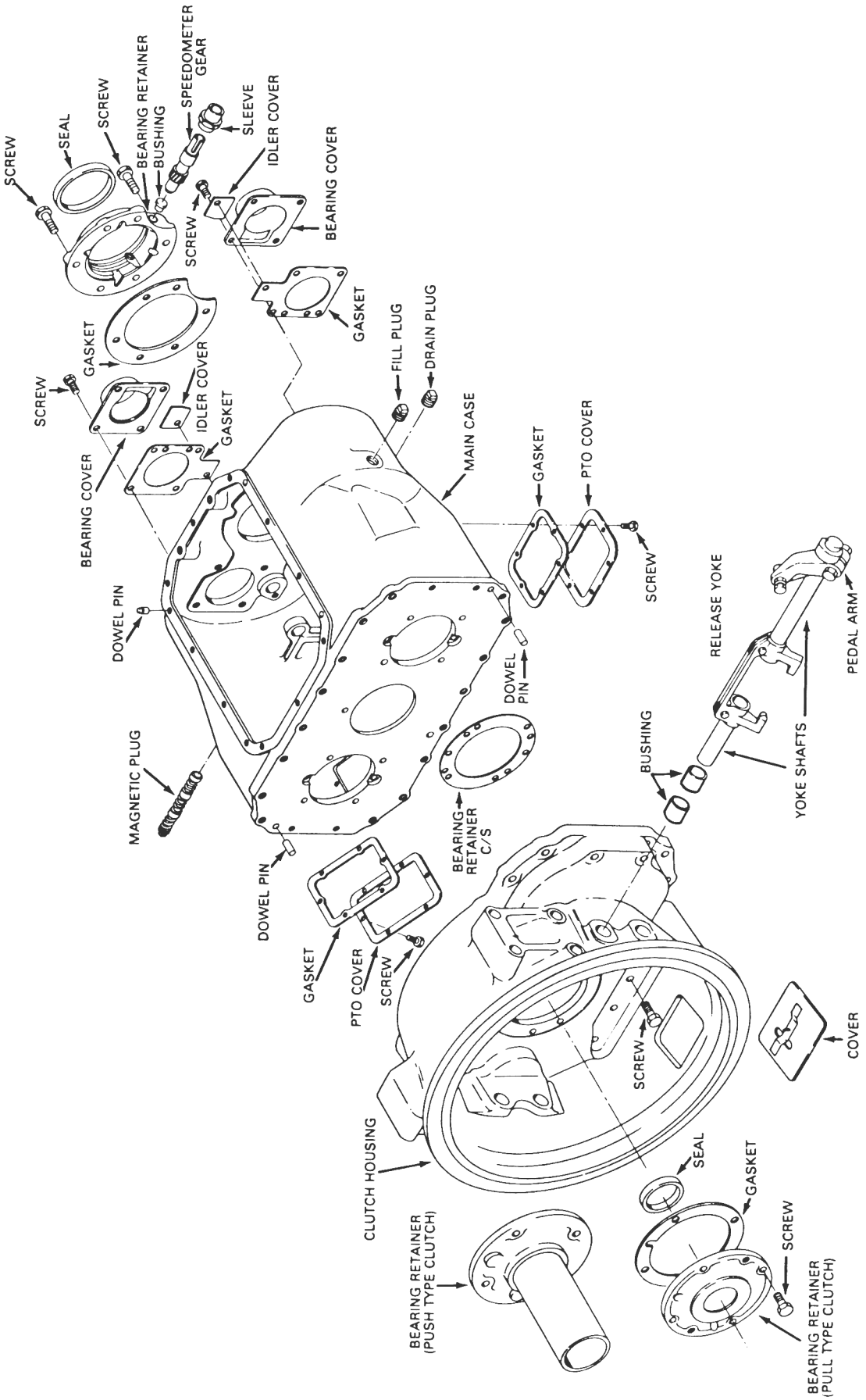
SCREW
SEAL
SCREW
BEARING RETAINER
BUSHING
SPEEDOMETER GEAR
SLEEVE
IDLER COVER
BEARING COVER
SCREW
GASKET
FILL PLUG
DRAIN PLUG
GASKET
IDLER COVER
SCREW
BEARING COVER
GASKET
MAIN CASE
GASKET
PTO COVER
SCREW
DOWEL PIN
DOWEL PIN
RELEASE YOKE
PEDAL ARM
BUSHING
YOKE SHAFTS
MAGNETIC PLUG
BEARING RETAINER C/S
DOWEL PIN
GASKET
PTO COVER
SCREW
SCREW
COVER
CLUTCH HOUSING
SEAL
GASKET
SCREW
BEARING RETAINER (PUSH TYPE CLUTCH)
BEARING RETAINER (PULL TYPE CLUTCH)

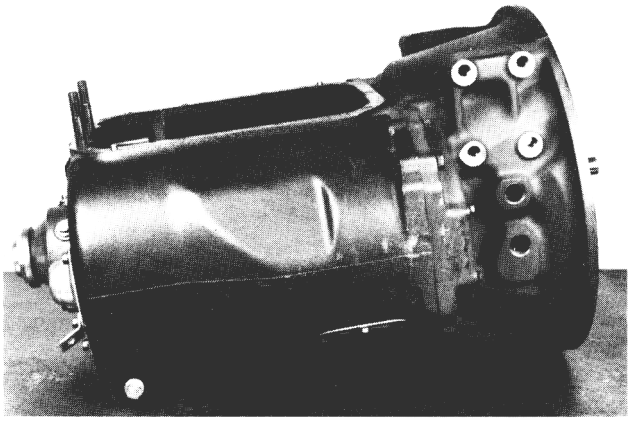

1. Remove the capscrews and shifter housing. If the shifter housing is a forward control, shift the transmission into sixth gear.

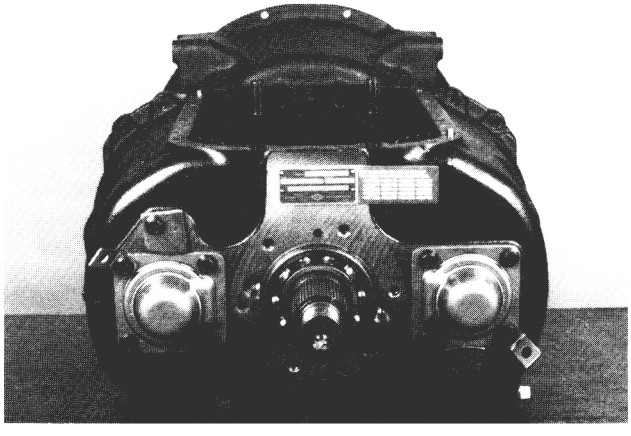

2. Remove the output bearing cap and gasket,

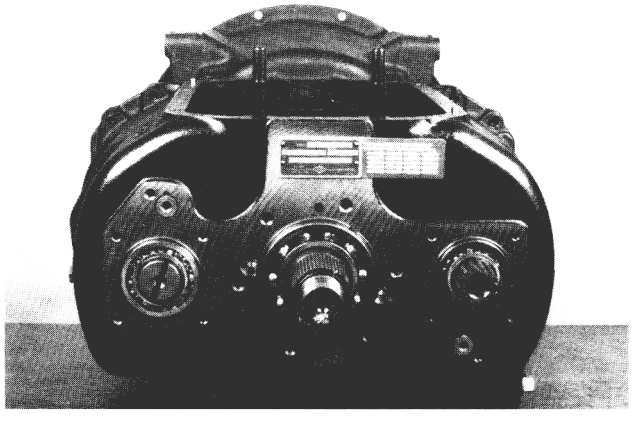

3. Remove the countershaft bearing retainers.

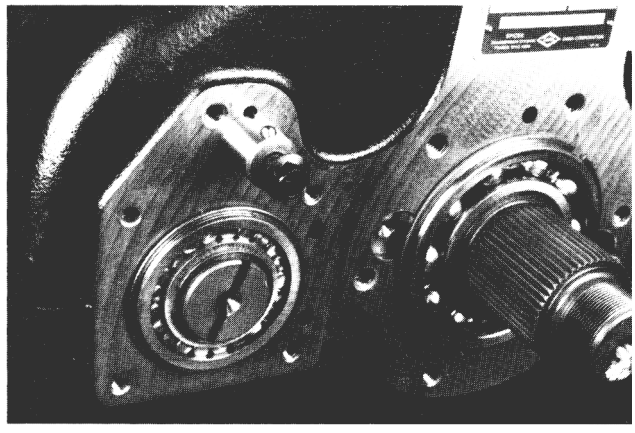

4. Insert a capscrew into the upper reverse idler shaft for removal. Don't lose the lockbail in the shaft.

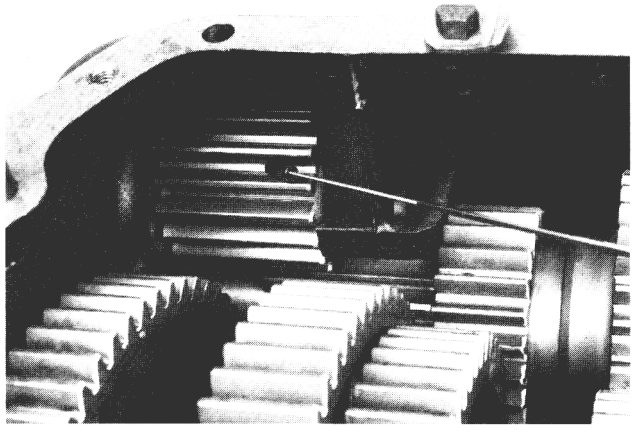

5. Roll the upper reverse idler gear toward the side of the case,

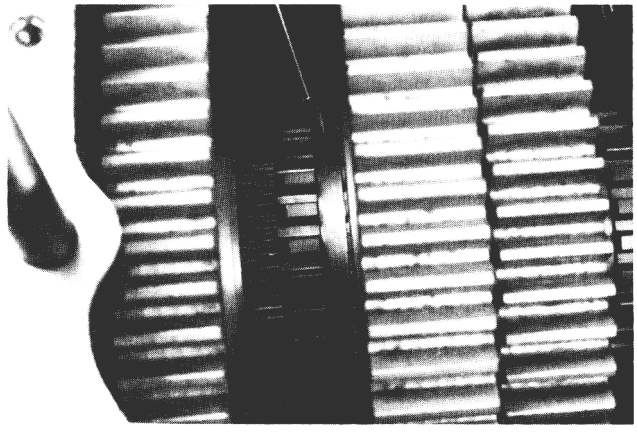

6. Engage the first-reverse collar into first gear,



7. Remove the input bearing cap, gasket and input shaft,

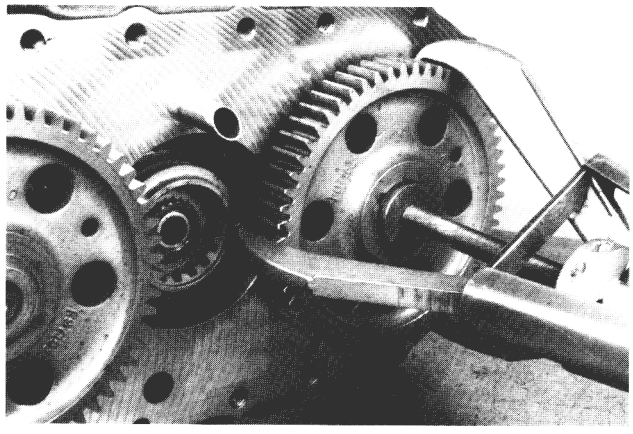

10. Remove the countershaft drive gears with the aid of a large puller.

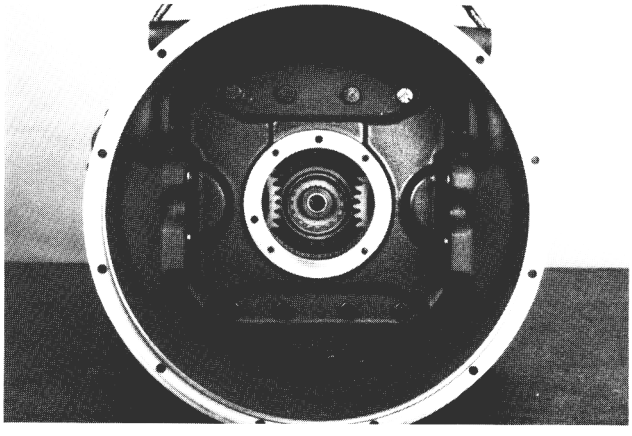

8. Next remove the clutch housing bolts and separate the housing from the case. Use of a chain hoist is recommended due to the weight of the housing.

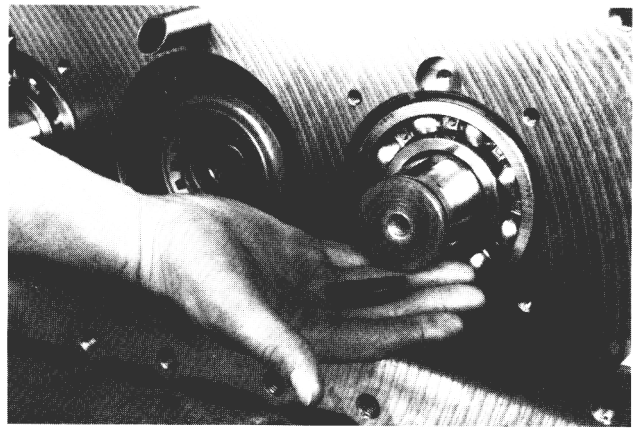

11. Continue by removing the countershaft driver gear countershaft keys.

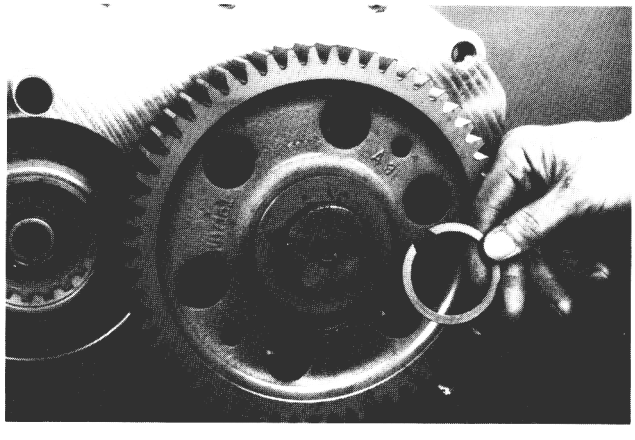

9. Remove the snap rings from the countershafts,

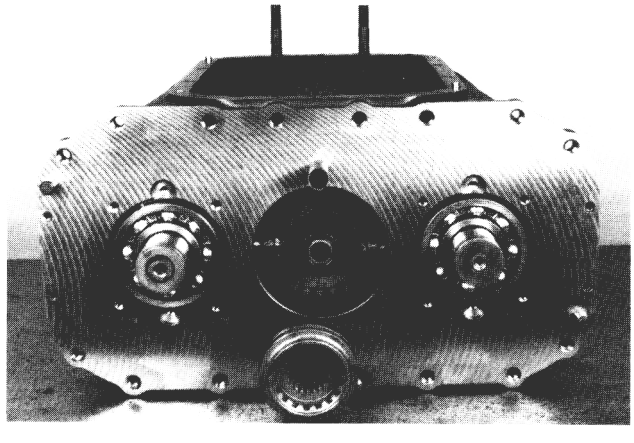

12. The sixth-seventh clutch collar may be removed from the mainshaft.

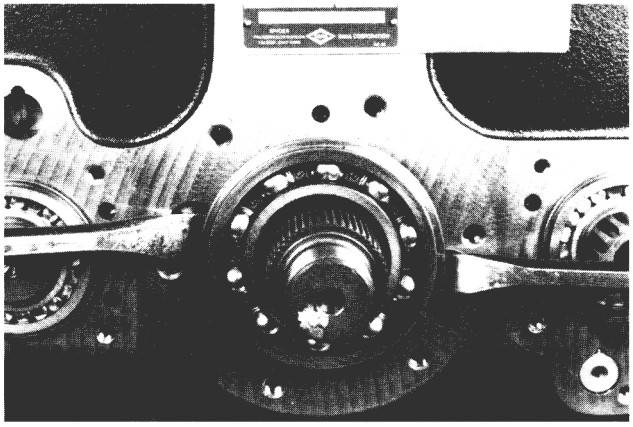

13. Place a sling around the second-third mainshaft collar and use a hoist to provide support during bearing removal. The milled slots also help make output bearing removal easier.

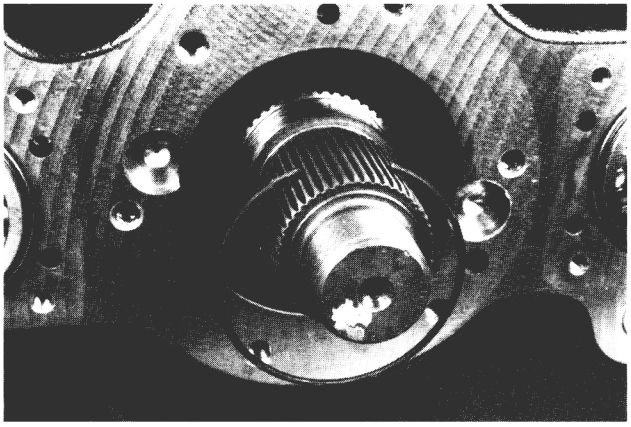

16. Remove the remaining gear bore snap ring.

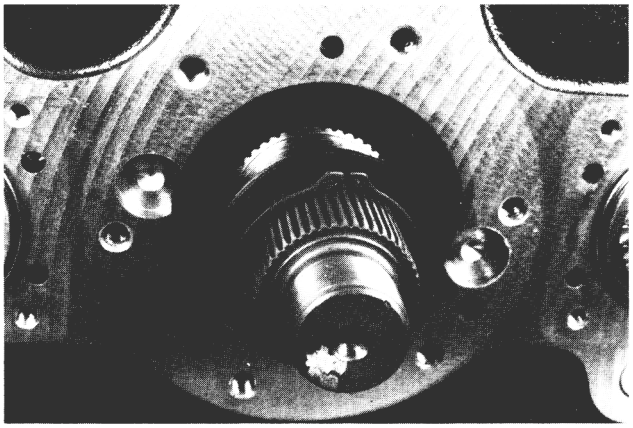

14. Remove the mainshaft snap ring and the internally splined thrust washer.

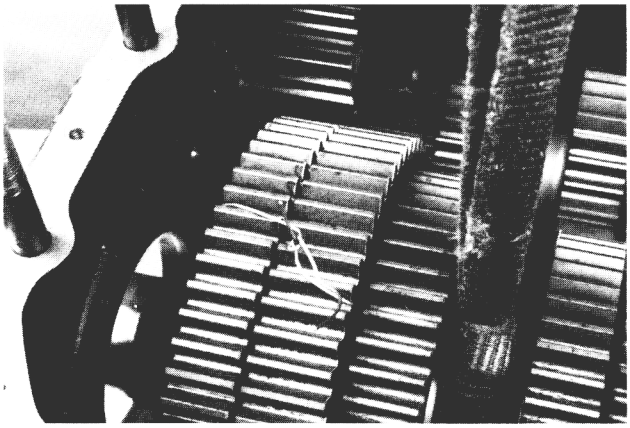

17. Butt first and reverse gears together. Secure them with lockwire to provide the necessary clearance for mainshaft removal.

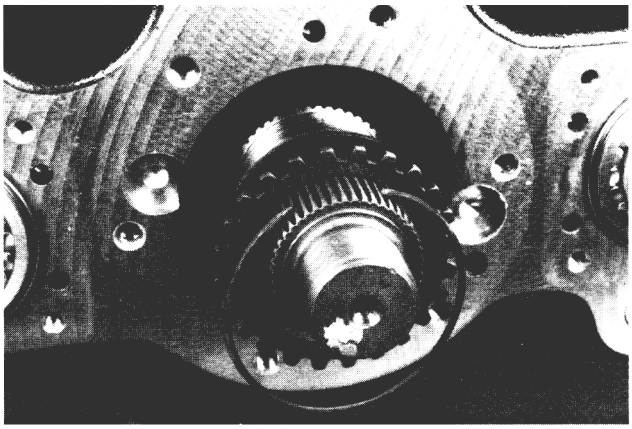

15. Next, remove the gear bore snap ring and both the externally and the internally splined thrust washers.

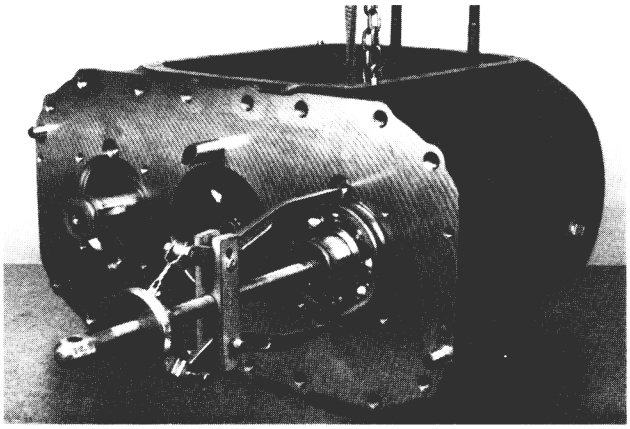

18. Use a puller to remove the countershaft front bearings.

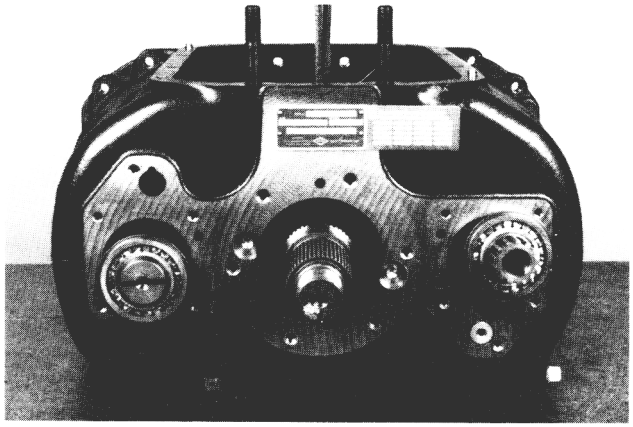

19. Move the countershafts to the rear as far as possible.

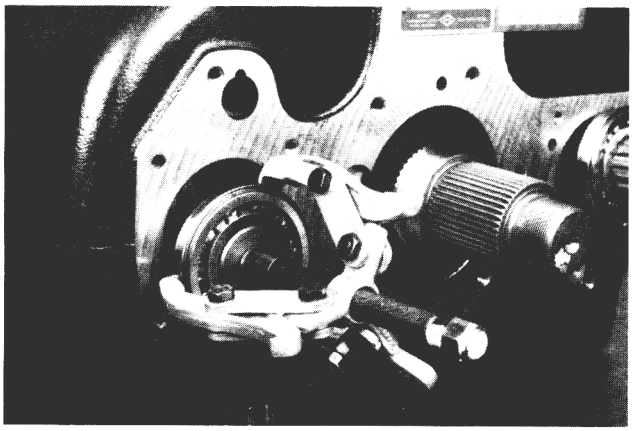

20. Install a puller for bearing removal.

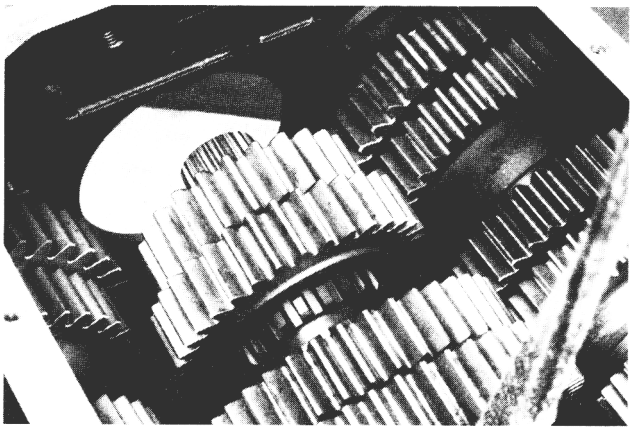

21. To provide necessary clearance for mainshaft removal, move both countershafts forward and toward the side of the case. Countershaft alignment blocks can also be used to help restrain the countershafts.

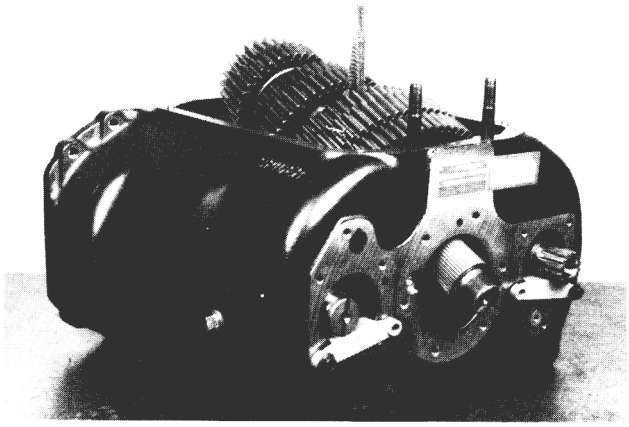

22. Lift the mainshaft assembly out of the case.

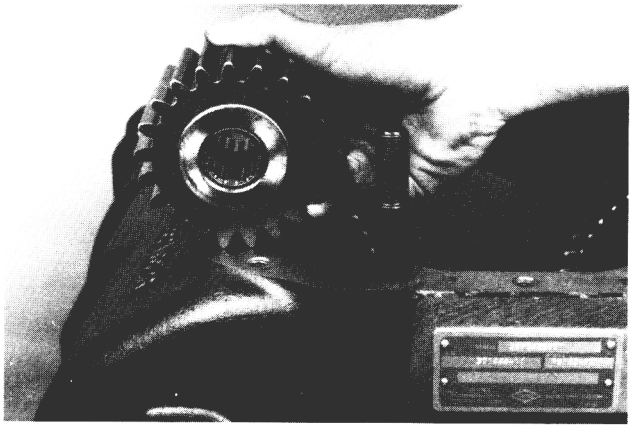

23. Remove the upper reverse idler gear.

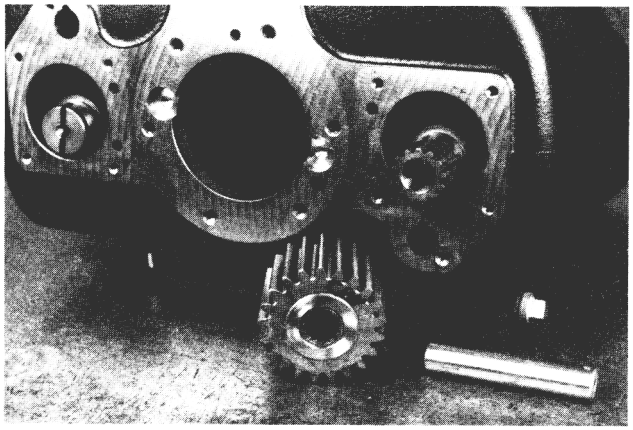

24. Remove the lower idler shaft and idler gear.

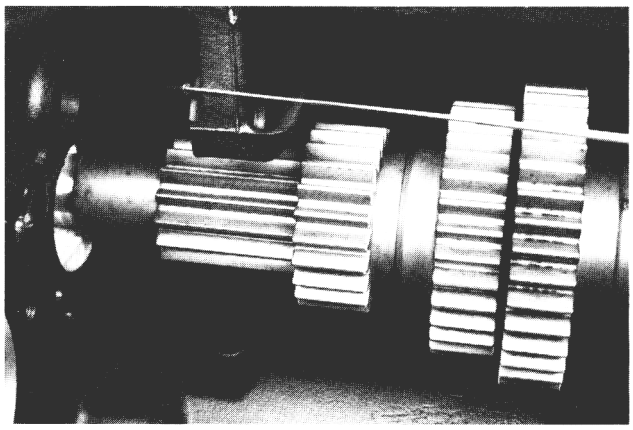

25. Because of this upper idler boss interference, it is easier to remove the right side countershaft first. Then remove the left side countershaft.

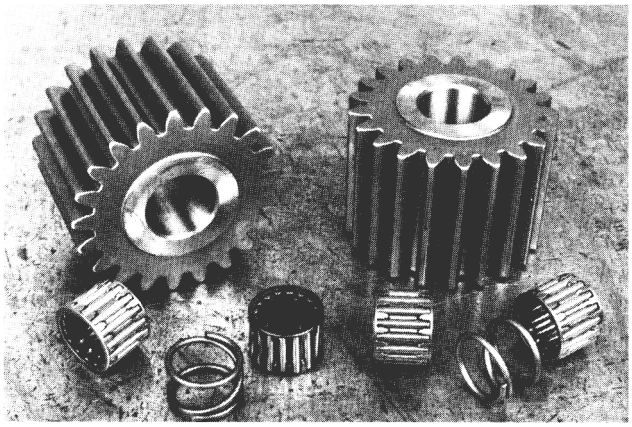

26. Check both idler gears and bearings for excessive wear.

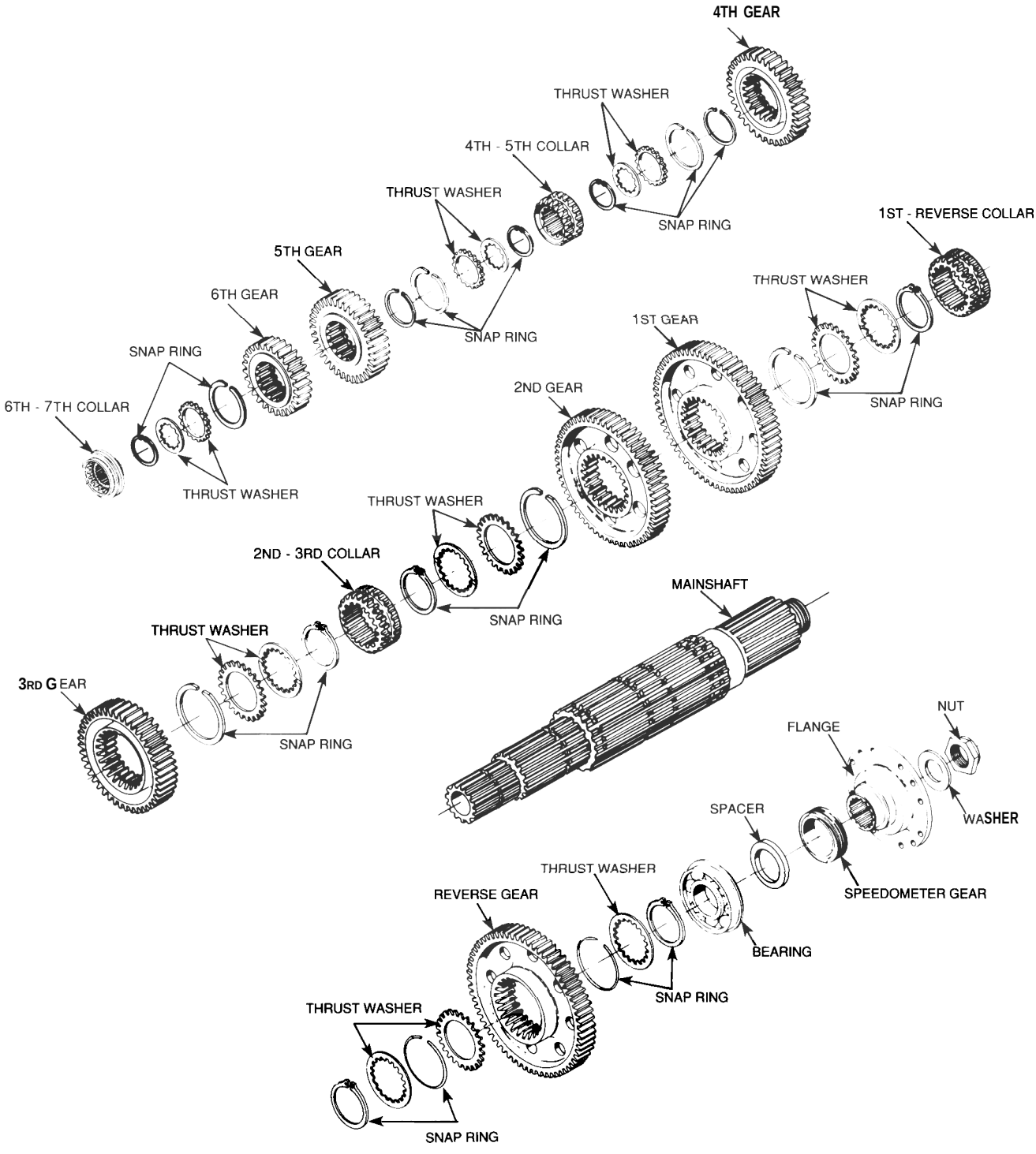
4TH GEAR
THRUST WASHER
4TH - 5TH COLLAR
THRUST WASHER
SNAP RING
1ST - REVERSE COLLAR
5TH GEAR
6TH GEAR
THRUST WASHER
1ST GEAR
SNAP RING
SNAP RING
SNAP RING
6TH - 7TH COLLAR
2ND GEAR
THRUST WASHER
THRUST WASHER
2ND - 3RD COLLAR
SNAP RING
MAINSHAFT
THRUST WASHER
3RD GEAR
SNAP RING
NUT
FLANGE
WASHER
SPACER
SPEEDOMETER GEAR
THRUST WASHER
REVERSE GEAR
BEARING
SNAP RING
THRUST WASHER
SNAP RING

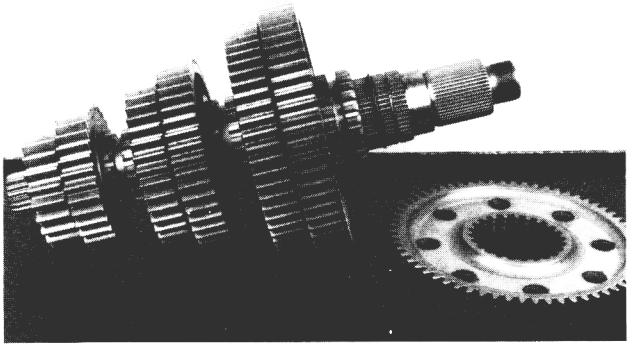

1. Begin disassembly of the mainshaft by cutting the lockwire and removing reverse gear.

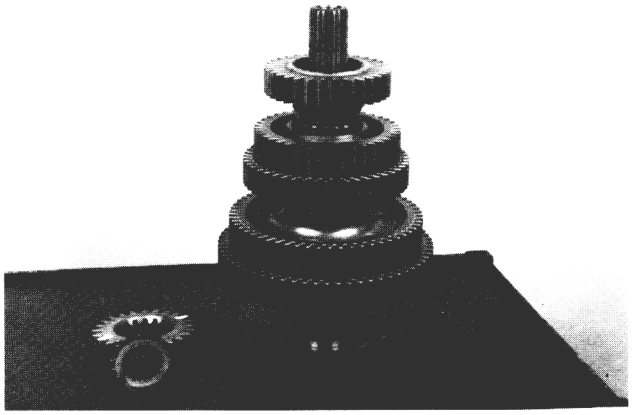

2. Remove the snap ring. Lift off sixth gear. Internally and externally splined thrust washers are in the gear. The internal washer teeth face toward the shaft. The external washer teeth face away from the shaft. A gear bore snap ring remains in the gear.

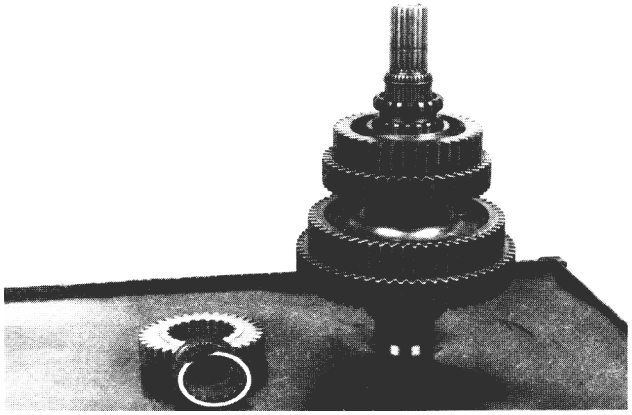

3. Remove fifth gear. There are two thrust washers and a snap ring inside the gear. There is also a gear bore snap ring inside each gear except reverse gear. This snap ring need not be removed unless otherwise specified.

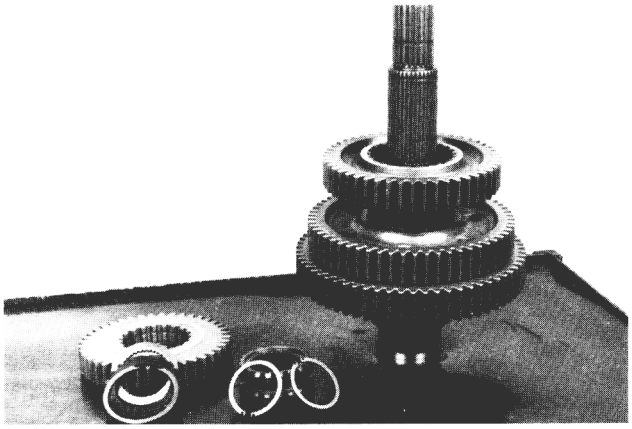

4. Remove the mainshaft snap ring. Lift fourth-fifth shift collar off the shaft. Remove the snap ring and fourth gear. inside the gear are two thrust washers and a snap ring.

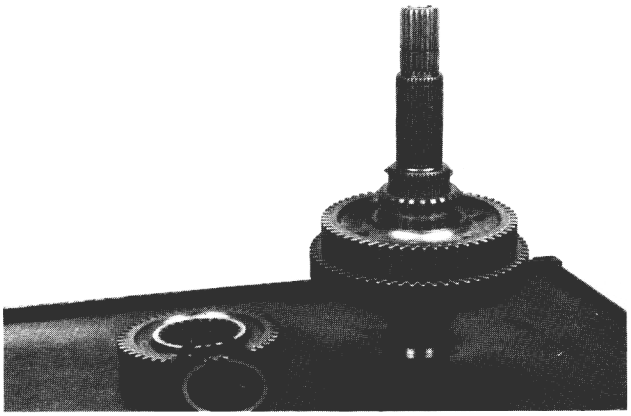

5, Continue by removing third gear. Two washers and a snap ring are inside it.

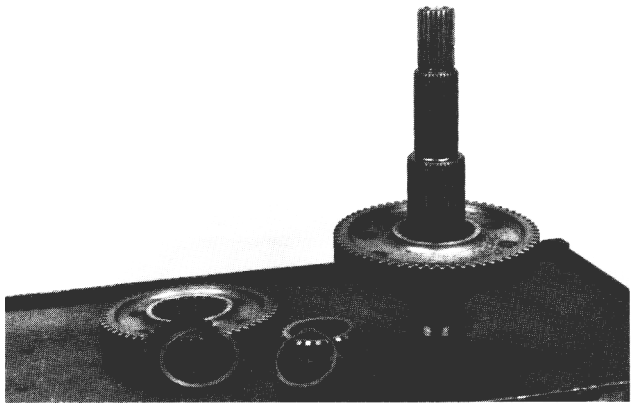

6. Remove the snap ring and second-third shift collar. Remove the next snap ring and lift second gear off the shaft. The gear contains two washers and a snap ring.

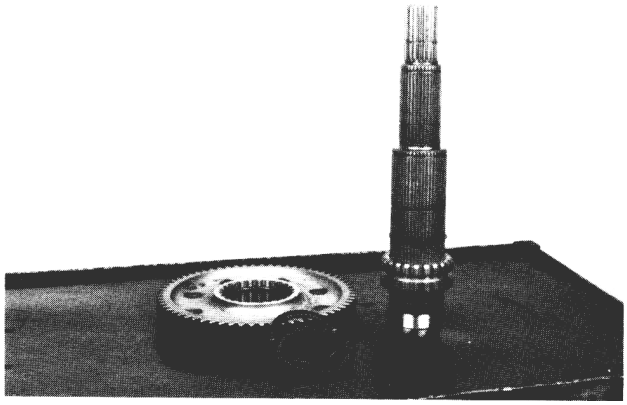

7. Continue by removing first gear. Again, there are two washers inside the gear. There is also a snap ring inside the gear, but there is no need to remove it.

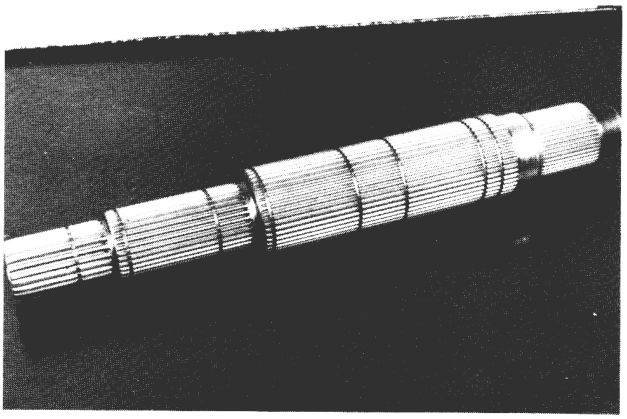

10. Notice that the mainshaft has rolled involute splines. They provide greater strength which means longer life.

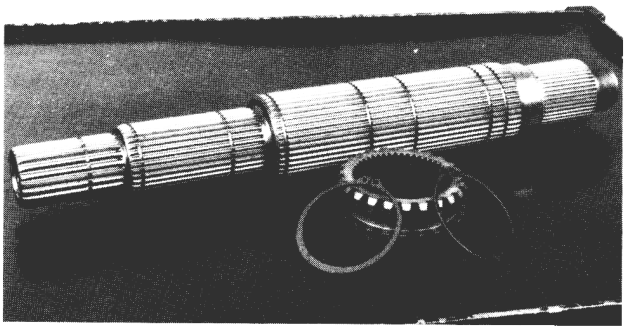

8. Remove the two snap rings and the first-reverse shift collar from the shaft.

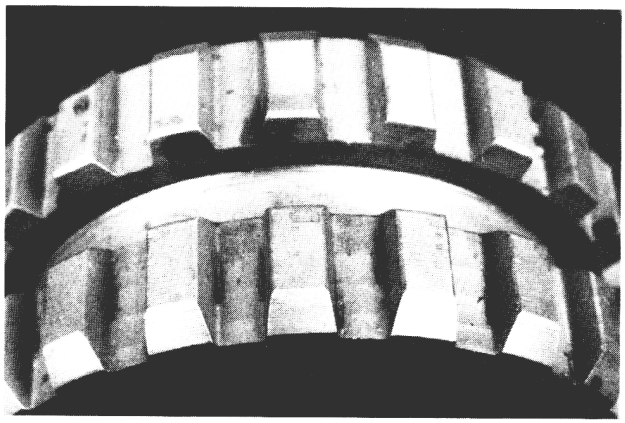

11. The fourth-fifth and sixth-seventh shift collars and gears have Taper-Lok™ gear locks. They are designed to draw gears into perfect alignment and eliminate gear jump-out.

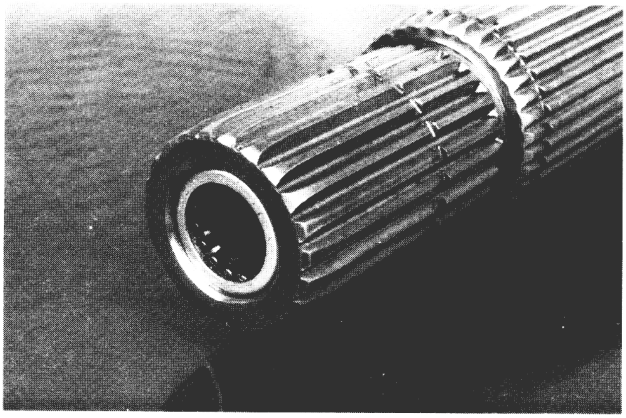

9. Remove the pocket bearing with an adequate puller.

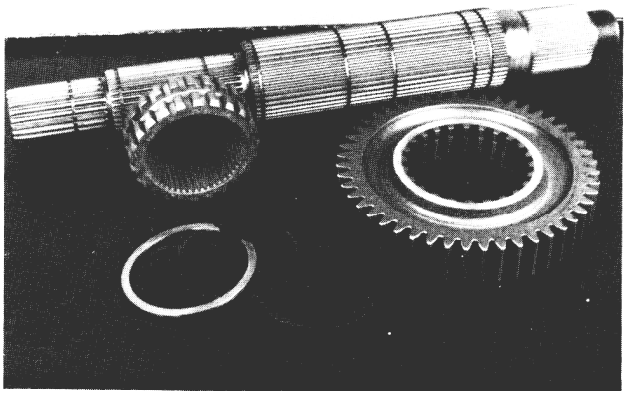

12. Clean all parts and inspect them for wear or damage. Replace them if necessary. Remember: if a gear is damaged and is going to be replaced, also replace its mating countershaft gears.

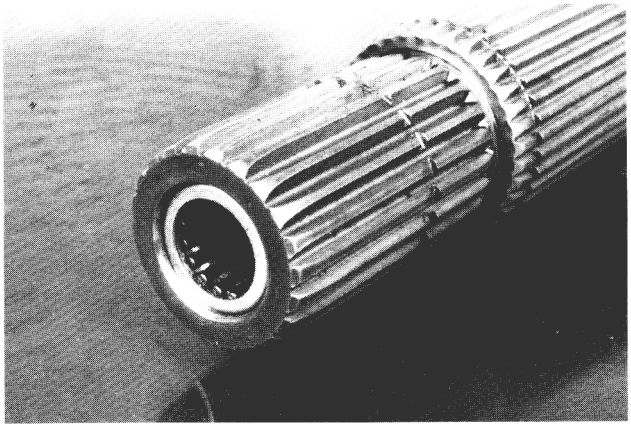

1, Install the pocket bearing to a depth of ,070".

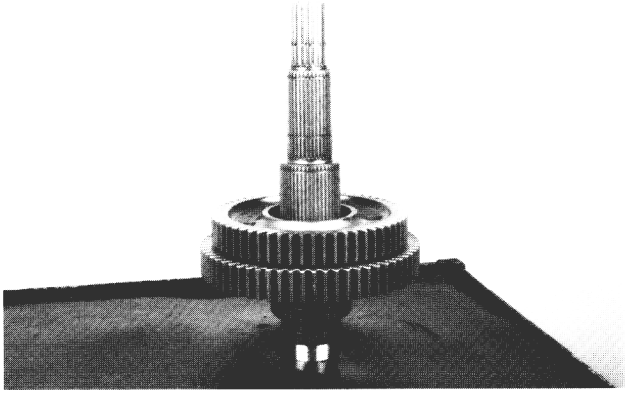

4. Place second gear on the shaft, Install the externally and internally splined thrust washers into the gear. Secure the assembly with a snap ring.

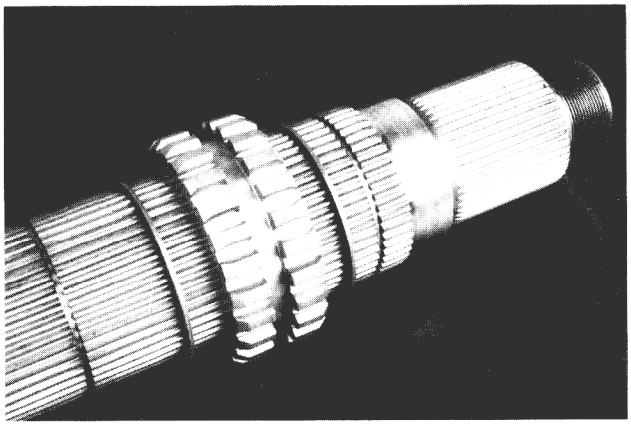

2. Lube all parts prior to reassembly. Install the first-reverse snap ring in the second groove from the bottom of the shaft. Slide the first-reverse collar into place and secure it with a snap ring.

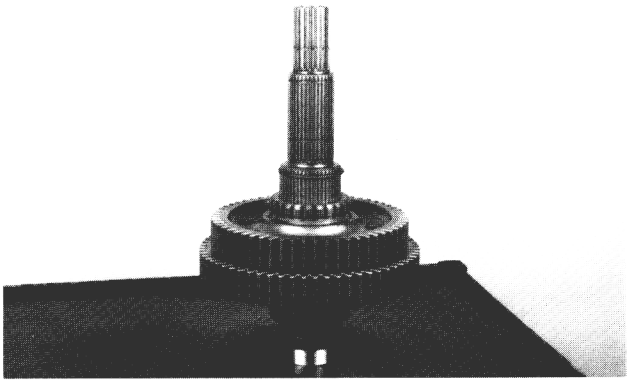

5. Install the second-third shift collar and snap ring.

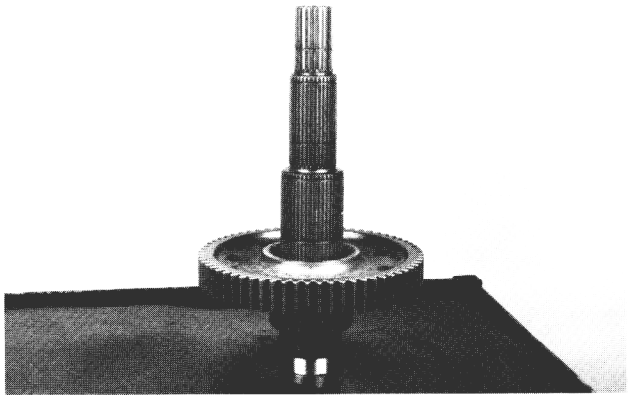

3. Place the internally and externally splined thrust washers on the shaft. The internally splined thrust washer should rest against the mainshaft snap ring.

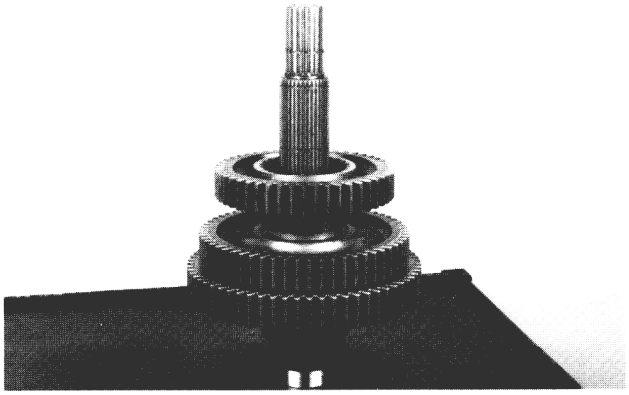

6. Place an internally splined washer and externally splined washer on the shaft. Install third gear.

SERVICE MANUAL

SPICER®

HEAVY DUTY

7 SPEED

TRANSMISSIONS

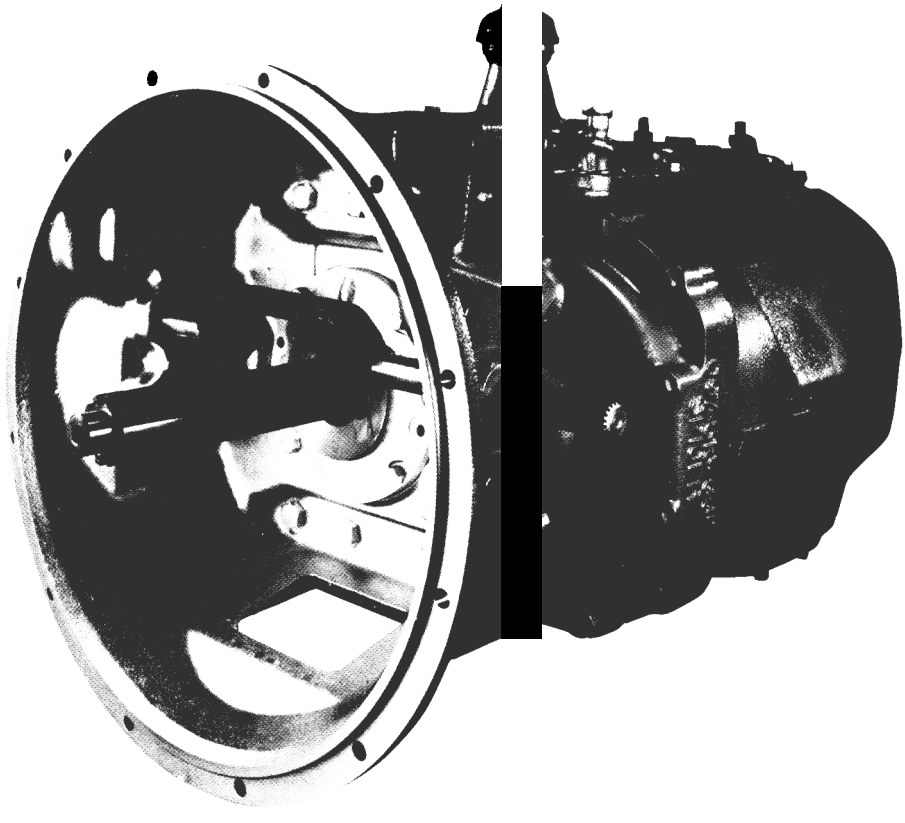

MODELS PS140-7A & PS125-7B

SPICER®

DANA

TABLE OF CONTENTS

PAGE

SECTION I – GENERAL INFORMATION
SPECIFICATIONS 2
SHIFTING PROCEDURES 3

SECTION II – MAINTENANCE
LUBRICATION 4
GENERAL DISASSEMBLY PRECAUTIONS 5
TOOL REFERENCE 6

SECTION III – CONTROLS
SHIFT TOWER 7
REMOTE CONTROL 8

SECTION IV – SHIFTER HOUSING
EXPLODED DRAWING – FORWARD CONTROL 9
EXPLODED DRAWING – CENTER CONTROL 10
DISASSEMBLY 11
REASSEMBLY 12

SECTION V – GEARS & CASE DISASSEMBLY
EXPLODED DRAWING – CASE 13
DISASSEMBLY 14

SECTION VI – MAINSHAFT DISASSEMBLY & REASSEMBLY
EXPLODED DRAWING – MAINSHAFT 19
DISASSEMBLY 20
REASSEMBLY 22

SECTION VII – INSPECTION PROCEDURES &
TORQUE SPECIFICATIONS 24

SECTION VIII – COUNTERSHAFT DISASSEMBLY & REASSEMBLY 25

SECTION IX – INPUT GEAR DISASSEMBLY & REASSEMBLY 26

SECTION X – GEARS & CASE REASSEMBLY 27

SECTION XI – TROUBLESHOOTING 31

SPECIFICATIONS

Spicer Seven Speed

MODELS PS140-7A & PSI25-7B

PS140-7A			PS125-7B		
Gear	Ratio	% Step	Gear	Ratio	% Step
1	10.13	— 69	1	12.27	— 75
2	5.99	– 68	2	7.00	— 69
3	3.56	– 39	3	4.13	— 63
4	2.57	— 40	4	2.54	— 38
5	1.84	— 38	5	1.84	— 38
6	1.33	– 33	6	1.33	– 33
7	1.00		7	1.00	
R	10.13		R	12.27	

Speeds: 7 Forward, 1 Reverse

Torque Capacity: PS140-7A 950-1400 lbs. ft. (1 290-1900 Nm)

PS125-7B 950-1250 lbs. ft, (1 290-1700 Nm)

Length: 30.75" (781.05 mm)

Weight: 626 lbs. (284 kg)

End Yokes: *1710 6-4-7691*
1760 6.3-4-1251
1810 6.5-4-3821

Flanges: *1710 6-1-5821*

Clutch: *14"* or 15½" (355.6 or 393.70 mm) 2-Plate

Clutch Housing: S.A.E. Nos. 1 or 2
Nodal Mount Standard

Oil Capacity: 48 Pints (22.7 Liters) at 0° Installation

Drive Gear: 2" Standard

Power Take-Off: 6 Bold right and lower left. Countershaft P.T.O. provision, standard on the right side, optional on the left.

SHIFT PATTERN
PS140-7A & PSI25-7B

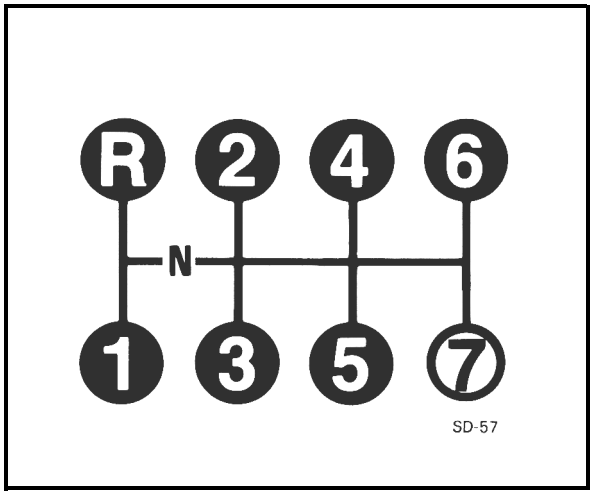

How to Shift Spicer Models PS140-7A & PS125-7B

Your vehicle has been equipped with the Spicer 7-Speed transmission. The Spicer 7-speed has seven forward speeds, engineered to make full use of engine output and to improve fuel economy, This single stick transmission has seven lever positions with no splitter or range necessary to provide superior performance. Here's how this transmission is designed to work for you in the driver's seat.

Starting

With the engine idling, depress the clutch and move stick into first gear. Gradually release the clutch and accelerate the engine to governed speed (1900-1950 RPM).

NOTE –A clutch brake is used to stop gear rotation to complete a shift into first or reverse when the vehicle is stationary. If a butt-toothed condition exists between the clutching teeth, a momentary re-engagement of the main clutch will allow the gear train to move into a smooth engagement.

NOTE – ***The clutch brake on this transmission is actuated by depressing the clutch pedal all the way to the floor. For normal upshifts and downshifts, only a partial disengagement of the clutch is necessary to break engine torque.***

Upshifting

Once governed engine speed has been attained, to shift into second gear, depress the clutch and move the stick to neutral. Engage the clutch and allow RPM to drop approximately 750. (RPM drop may vary with engines of different governed speeds) *, depress the clutch and move the stick into second gear. Re-engage the clutch and accelerate to governed speed. Continue upshifting through seventh gear in this manner.

Downshifting

When downshifting from seventh gear, allow RPM to drop approximately 475*, depress clutch pedal and move stick to neutral. Engage the clutch, accelerate to governed speed, depress the clutch and move the stick into sixth gear, then re-engage the clutch. Continue downshifting through first gear in this manner.

***NOTE–All RPM drops are based on the PS I40-7A and PS 125-7B transmission ratios and an engine governed speed of 1900-1950 RPM. These drops will vary with other transmission ratios or with engines of higher governed speeds.**

OPERATION

Clutches

A clutch brake is required for use with this transmission. It is recommended that the torque limiting clutch brake be used instead of the three-piece type. Attention is called to the fact that Spicer 14" and 15%" 2-plate clutch service manuals (Bulletins 1308 and 1309) are available for the asking, and contain complete information on all Spicer Heavy Duty Clutches.

Replacement Parts

The exploded views of subassemblies which are incorporated here are for the mechanic's convenience and show the latest material. The parts are arranged in their correct order and may also be used as a reference for assembly or disassembly of this unit.

Power Flow

The Spicer split torque transmission is designed for medium and heavy duty, on and off highway applications.

The two countershaft design allows the engine torque to be equally divided between the two countershafts. This provides a high ratio of torque capacity to transmission weight. This also allows a reduction in the face width of each gear involved in the transmission. All the gears are in constant mesh through spur teeth.

Spicer" Transmission Lubrication

To insure proper lubrication and operating temperatures in these units it is most Important that the proper lubricants be used and that correct 011 levels be maintained

Recommended Lubricants

The lubricants listed below are recommended, in order of preference, for use in all Spicer mechanical transmissions, auxiliaries and transfer cases.

Oil Changes

We recommend an initial oil change and flush after the transmission is placed in *actual* service. This change should be made anytime following 3000 miles (4827 km), but *should not exceed 5000* miles (8045 km), of over-the-road service. In off-highway use, the change should be made after 24 and before 100 hours of service have elapsed. There are many factors that influence the following oil change periods, and we have not specified a definite mileage interval,

In general, it is suggested that a drain and flush period be scheduled every 50,000 miles (80,450 km) for normal over-the-highway operations. Off-highway usually requires oil change every 1000 hours. The oil level in the transmission should be checked every 5000 miles (8045 km) on-highway, or every 40 hours in off-highway operation. When it is necessary to add oil, we recommend that types or brands of oil should not be mixed. The correct oil level in ail Spicer transmissions is established by the filler plug opening.

Refill

First, remove all dirt around the fliler plug Then refill with new oli of grade recommended for the existing season and prevailing service Fill to the bottom of the level testing plug positioned on the side of the transmission.

Overfilling

DO NOT OVERFILL the transmission. Overfilling usually results in oil breakdown because of excessive heat and aeration from the churning action of the gears. Early breakdown of the oil will result in heavy varnish and sludge deposits that plug up oil ports and build up on splines and bearings. Overflow of oil escapes onto clutch or parking brakes causing additional trouble.

NON-SYNCHRONIZED TRANSMISSION RECOMMENDED LUBRICANTS

The following lubricants are recommended, in order of preference.

TEMPERATURE	GRADE	TYPE
Above O°F (–18°C) Below O°F (–18°C)	SAE 30, 40, or 50 SAE 30	Heavy Duty Engine Oil meeting MIL-L-2104D or MIL-L-461 52 B, API-SF or API-CD (MIL-L-2104 B & C, or 46152 are also acceptable)
Above O°F (–18°C) Below O°F (–18°C)	SAE 90 SAE 80	Straight Mineral Gear Oil R & O Type API-GL-1
Above O°F (–18°C) Below O°F (–18°C)	SAE 90 SAE 80	*Mild EP Gear Oil MIL-L-2105 or API-GL-4
All	CD SAE 50 CD SAE 30	Synthetic Engine Oil meeting MIL-L-2104 D or MIL-L-46152 B, API-SF or API-CD
All	EP SAE 75W90 EP SAE 75W140	*Synthetic Gear Oil meeting MIL-L-2105C or API-GL5

*EP Gear Oils are not recommended when lubricant operating temperatures are above 230° F (110°C).

General Precautions for Disassembly

IMPORTANT

Read this section before starting the detailed disassembly procedure.

Follow each procedure closely in each section, making use of both the text and the pictures.

Rebuild Facilities

A suitable holding fixture or overhaul stand is desirable, but not necessary, to rebuild this unit, The flat bottom of the transmission case provides a suitable working platform when the unit is placed on a sturdy shop table.

For easier working conditions, table height should be 28-30 inches. A light chain hoist should be used to handle the mainshaft and countershafts during removal and reassembly procedures.

Cleanliness

Transmissions should be steam cleaned prior to disassembly, Seal all openings before steam cleaning to prevent entry of dirt and water which can damage serviceable parts

Dirt is abrasive and will cause premature wear of bearings and other parts. We suggest that mechanics have a small wash tank to clean parts just prior to reassembly.

Front Bearing Retainer & Seal

When installing the front bearing retainer and seal to the transmission, the following precautions must be used.

Bearings

When a transmission is removed at relatively low mileage, bearings should be removed with pullers designed for this purpose. Wrap the bearings to keep out dirt. Clean, inspect and lubricate all bearings just prior to reassembly. If accumulated mileage is over 150,000 miles, we suggest that all bearings be replaced.

End Yokes and Flanges

Hammering on end yokes and flanges to remove or install them is not only destructive to the yoke or the flange itself, but can also cause serious Internal damage, Hammering destroys or mutilates the pilot diameters and warps or bends the flange. Hammering on end yokes will close-in the bearing bores or misalign yoke lugs and result in early failures of journal needle bearings, etc.

Serlous damage can be done Internally to bearings, thrust faces and washes, pilot bearings, etc., by hammering on external parts In most designs when the yoke/flange locknuts are tightened and secure, the Internal bearings and gears are in proper location. When the yoke/flange IS driven on the shaft, two conditions can exist.

(a) If the bearing fit *is tight* on the shaft, then usually the bearings will brinell as they must absorb the pounding force

(b) If the bearing IS loose, the shaft Will keep moving inward until it IS stopped by the Internal parts such as pilot bearing thrust washers, etc.

Power Take-Off's

Refer to your owner's manual and installation procedures when installing any PTO on your transmission.

CAUTION

Do not tow vehicles equipped with Spicer transmissions without first pulling the axle shafts or disconnecting the drive shaft. Lubrication of the internal gear train is inadequate when the vehicle is towed. Also, do not pull or roll start vehicles in first or reverse gears.

INSTALL SEAL DRY

WARNING

RED SLEEVE MUST BE USED TO PREVENT SERIOUS DAMAGE TO OIL SEAL WHEN ASSEMBLING BEARING CAP. FAILURE TO COMPLY WILL VOID SEAL WARRANTY.

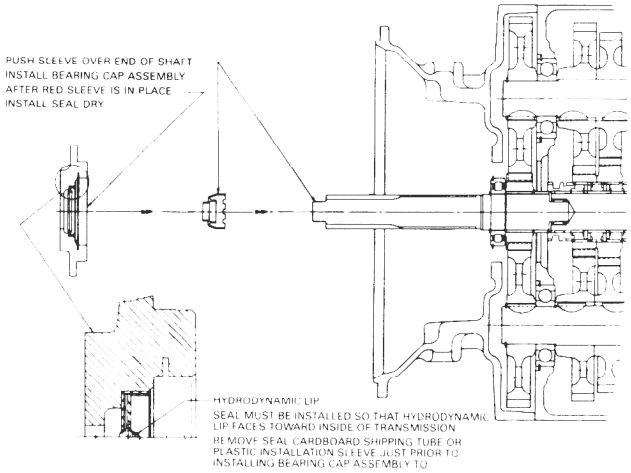

Tool Reference

Tools

Spicer Transmissions can be repaired with ordinary mechanic's hand tools. However this procedure is not only time consuming, but could damage otherwise re-usable parts.

To reduce maintenance costs and vehicle downtime, we recommend using the special tools shown in this section.

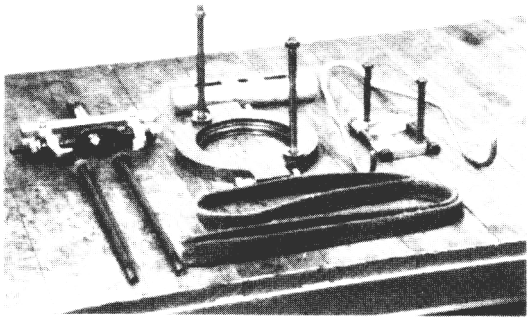

Suggested pullers and alignment tools,

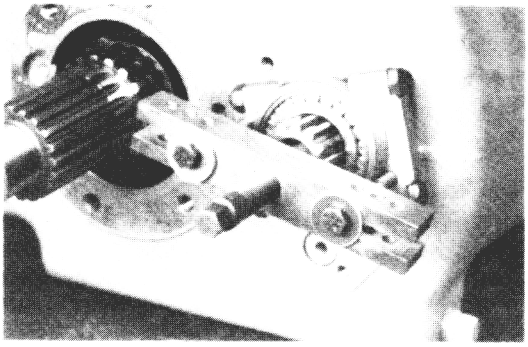

Countershaft rear bearing puller (Snap-on – CJ 950).

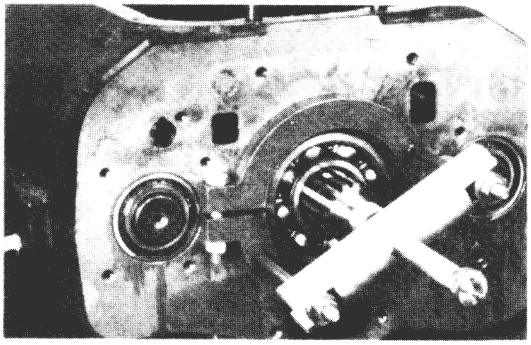

Reversible input and output bearing puller–(Kent-Moore J 24348). Used with end yoke remover (J *7804-01).*

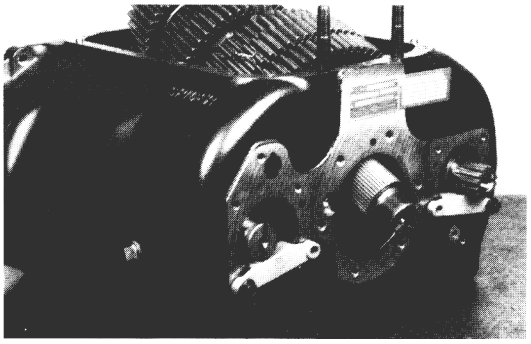

Countershaft alignment blocks for PS 140-7A and PS125-7B (Kent-Moore J 28720). Provide maximum clearance for mainshaft assembly installation. Allow countershafts to be rotated for timing purposes.

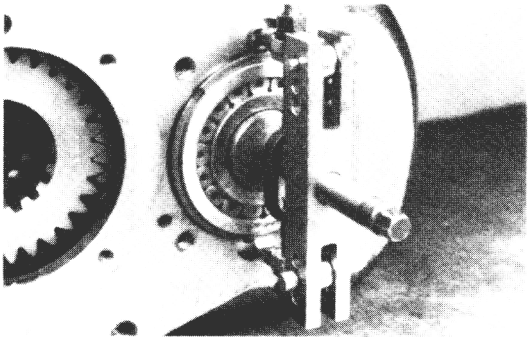

Countershaft front bearing puller (Snap-on– CJ 80).

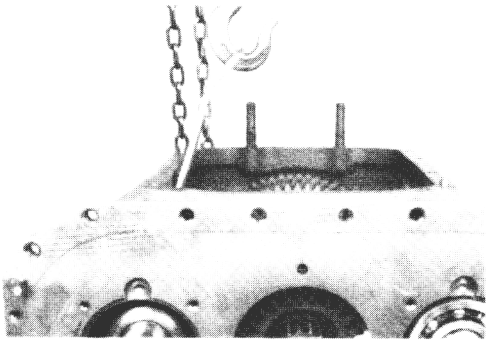

Countershaft lift hook–(Kent-Moore J 23667). Holds countershaft in time while centering the countershaft in the case bore for easier bearing installation.

Tools may be purchased through:
Kent-Moore
29784 Little Mack
Roseville, Michigan 48066-2298
Telephone: 1-800-328-6657

Shift Tower

Disassemble

1. Remove the six retaining capscrews and lockwashers, Separate the dome from the shifter housing and gasket and lift straight up.
2. Position shift lever dome on edge in vise.
3. Pull up grommet. Depress collar against spring and remove lock pin.
4. Slide the compression cup up shift lever and remove rock shaft snap ring.
5. Tap rock shaft free of dome and remove shift lever. Remove seal and discard.
6. Remove shift lever handle and slide grommet, collar, spring and cup off lever.

Inspection

Wash all parts thoroughly and inspect for excessive wear at cross hole in lever and rock shaft. Inspect finger end of lever for excessive wear.

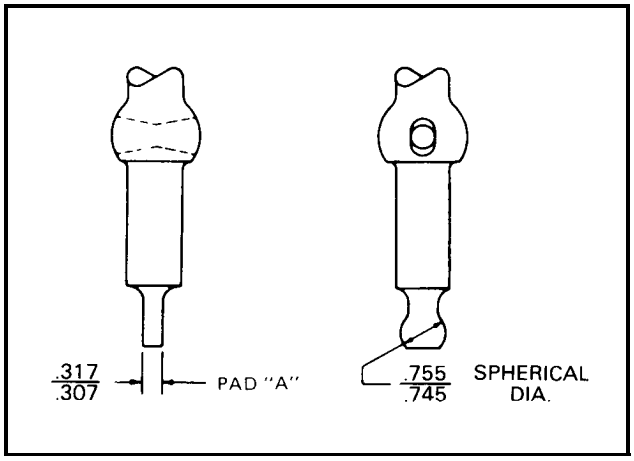

Check spring tension by comparing to a new part

Reassembly

1. Position shift lever dome on edge in vise,
2. Hold shift lever so that cross hole in lever aligns with rock shaft cross holes in dome,
3. Insert rock shaft through hole in dome and cross hole of shift lever.
4. Assemble rock shaft snap ring to groove of dome and lock rock shaft in place,
5. Grease lightly and assemble new seal to shift dome, Grease inner wall of cup and slide over lever into position on dome.
6. Assemble spring, collar and grommet over shift lever, Depress collar and insert lock pin through hole in lever,
7. Assemble shift lever handle,
8. Place shift lever and dome assembly on shifter housing with gasket, noting that finger enters the neutral position notches,
9. Secure with four capscrews and lockwashers.

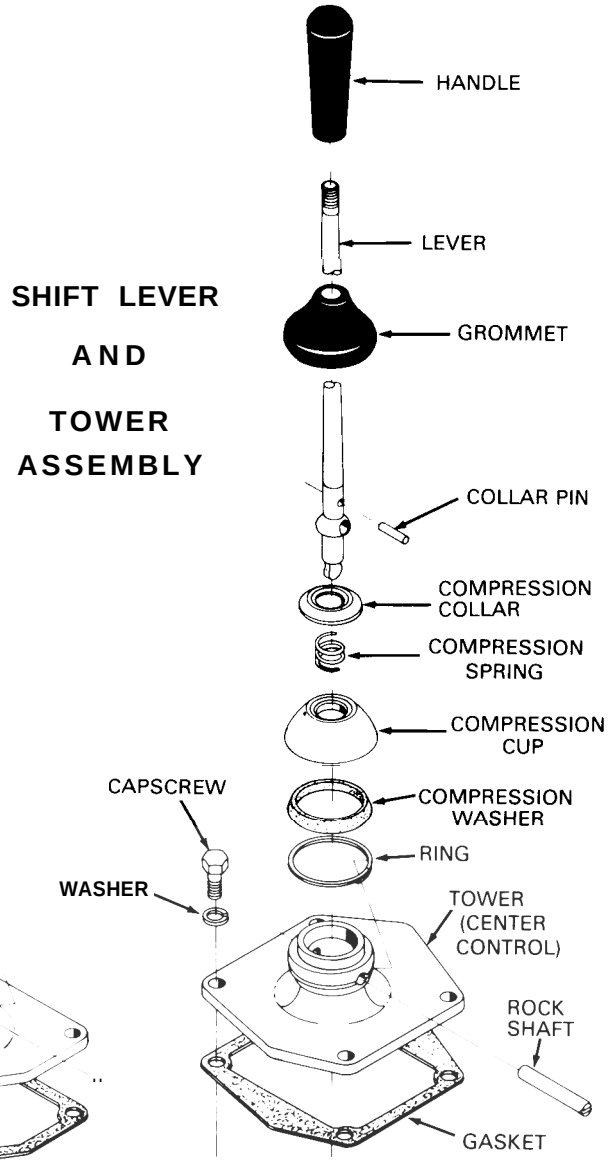

Remote Control Assembly

Disassembly

Remove the capscrews and lockwashers and separate the remote control from the shifter housing.

1. **Remove setscrew from universal joint assembly and pull universal joint from the rod.**
2. **Remove four capscrews and lockwashers holding end cover and gasket in place.**
3. **Remove setscrew from joint shift rod finger and tap rod through cross holes in housing.**
4. **Remove finger from housing.**
5. **Remove setscrew from inner shift finger.**
6. **Slide rod and bracket assembly from inner shift finger.**
7. **Be careful not to lose key from rod or shift finger.**
8. **Remove seals from cross holes in housing.**

Inspection

Check shift fingers for excessive wear. Check all bores and rods for excessive wear or scuffing.

Clean parts thoroughly and apply light coat of grease to pivot points when reassembling.

Assembly

1. **Install new key in rod and bracket assembly and install into remote housng, sliding shift finger (inner) on end of rod.**
2. **Line up setscrew hole and install setscrew, and torque to 40 to 50 lbs. ft.**
3. **Install joint shift rod and through cross holes and through outer finger, making sure finger is inserted into bracket.**
4. **Align setscrew hole and install same. Torque to 40 to 50 tbs. ft.**
5. **Install end cover and secure with four capscrews and lockwashers.**
6. **Install two new oil seals in joint shift rod bores.**
7. **Install joint assembly and secure with setscrew.**

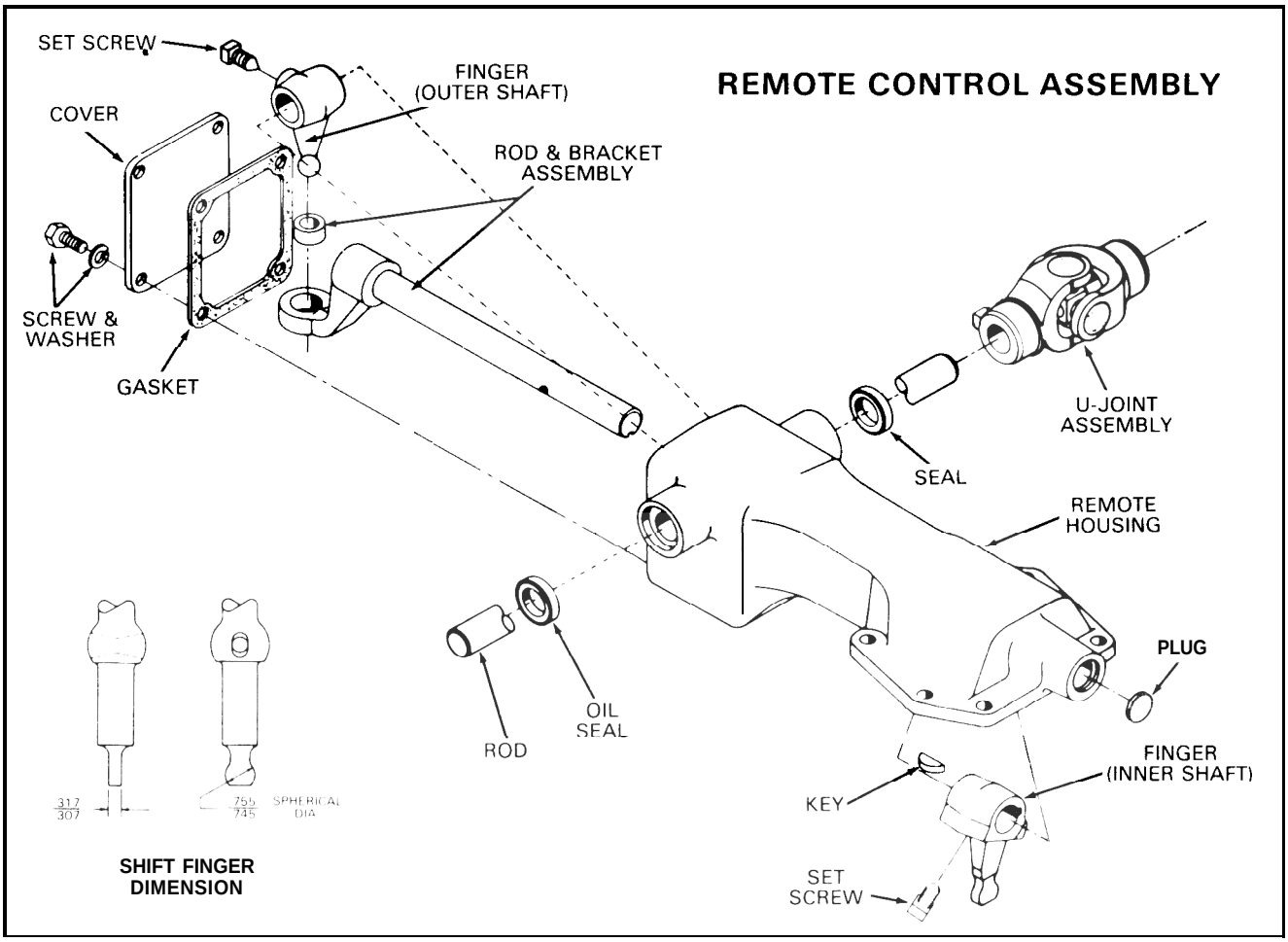

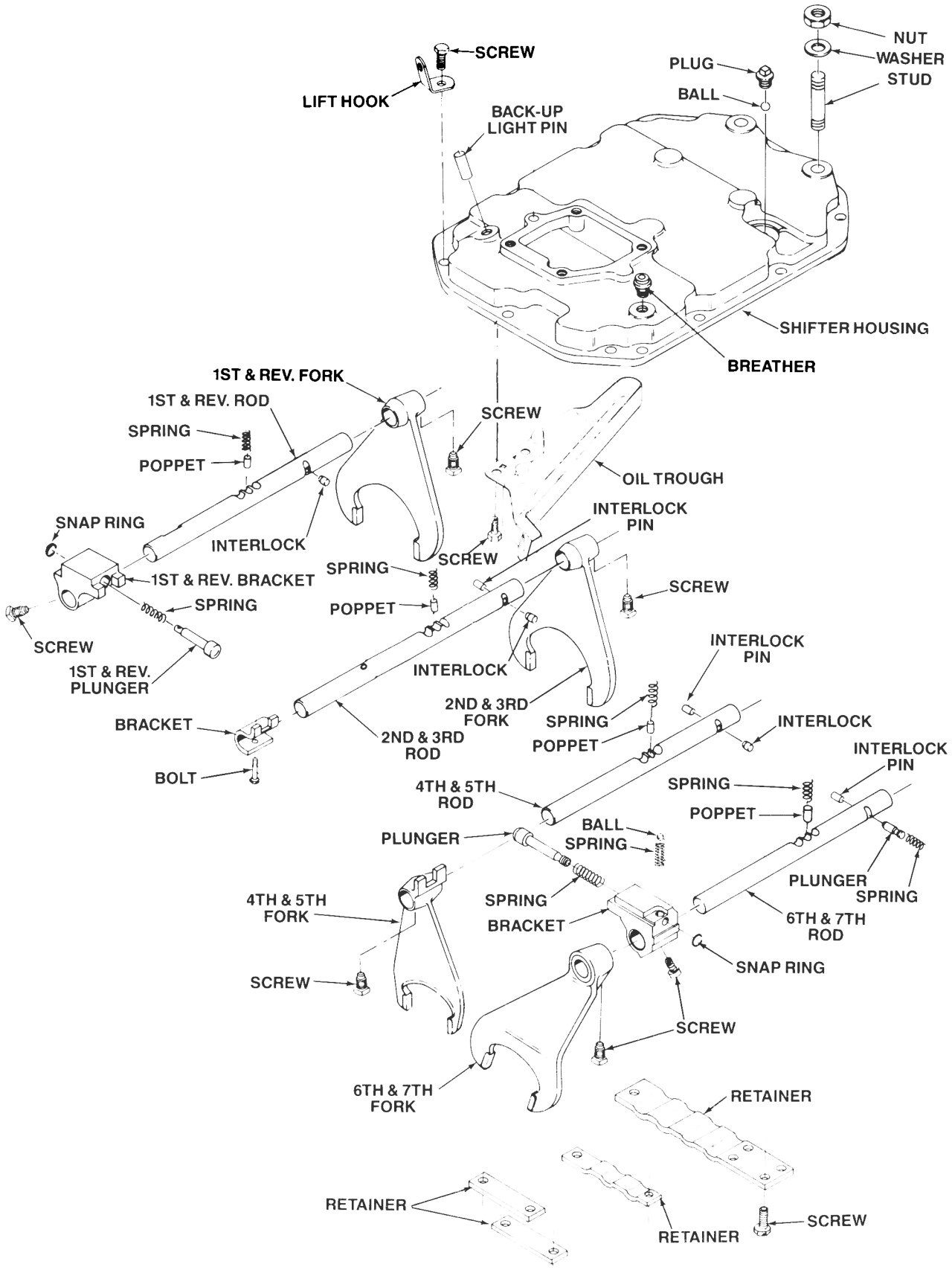
SCREW
LIFT HOOK
BACK-UP LIGHT PIN
PLUG
BALL
NUT
WASHER
STUD
SHIFTER HOUSING
BREATHER
1ST & REV. FORK
1ST & REV. ROD
SPRING
POPPET
SCREW
OIL TROUGH
SNAP RING
INTERLOCK
INTERLOCK PIN
1ST & REV. BRACKET
SPRING
SCREW
SCREW
POPPET
SCREW
1ST & REV. PLUNGER
INTERLOCK
INTERLOCK PIN
2ND & 3RD FORK
BRACKET
2ND & 3RD ROD
SPRING
INTERLOCK
POPPET
BOLT
INTERLOCK PIN
4TH & 5TH ROD
SPRING
POPPET
BALL
PLUNGER
SPRING
PLUNGER
SPRING
4TH & 5TH FORK
SPRING
BRACKET
6TH & 7TH ROD
SNAP RING
SCREW
SCREW
6TH & 7TH FORK
RETAINER
RETAINER
RETAINER
SCREW

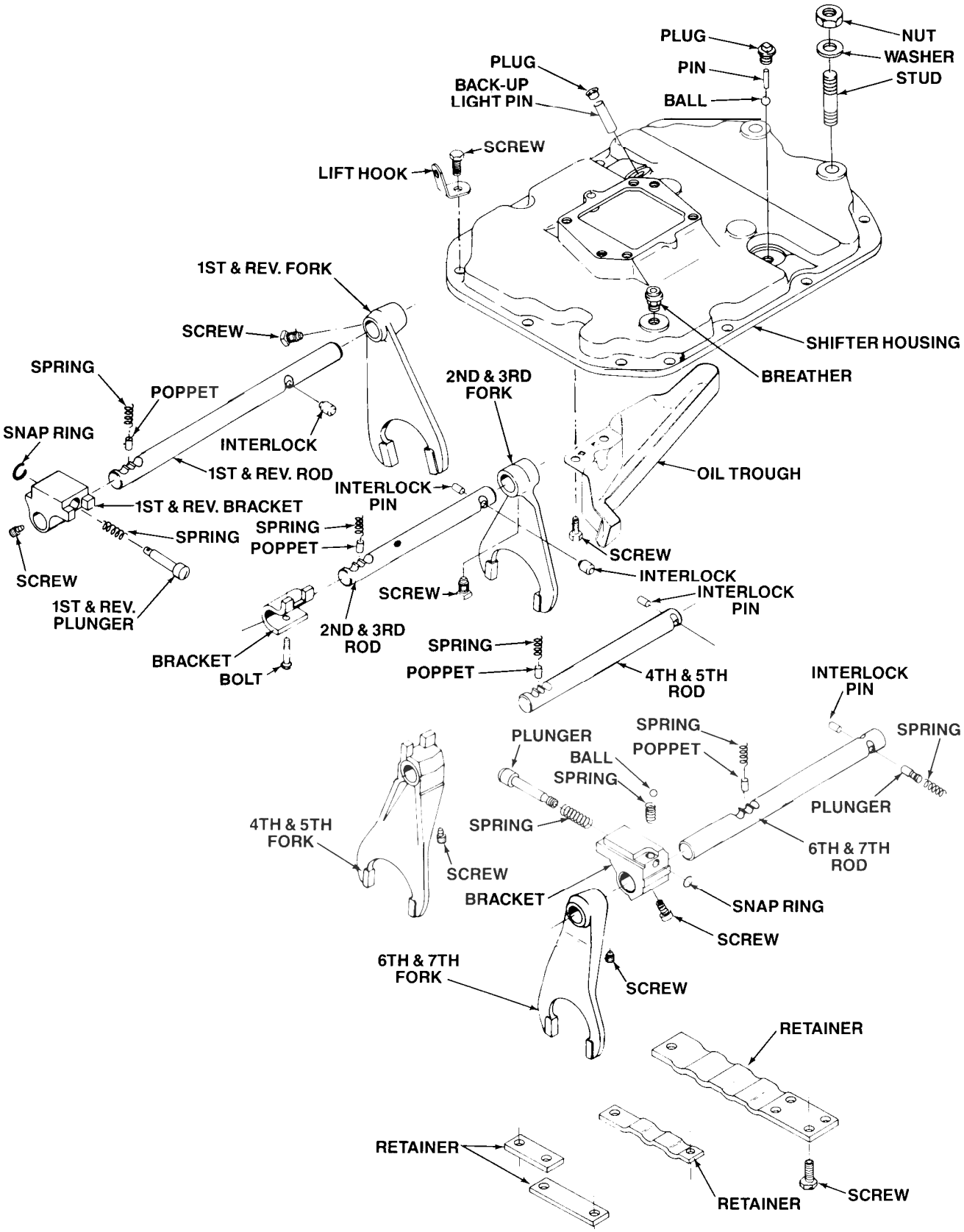
PLUG
NUT
WASHER
STUD
PIN
BALL
PLUG
BACK-UP LIGHT PIN
SCREW
LIFT HOOK
1ST & REV. FORK
SCREW
SHIFTER HOUSING
BREATHER
SPRING
POPPET
SNAP RING
INTERLOCK
1ST & REV. ROD
2ND & 3RD FORK
OIL TROUGH
INTERLOCK PIN
1ST & REV. BRACKET
SPRING
SPRING
POPPET
SCREW
SCREW
INTERLOCK
INTERLOCK PIN
SCREW
1ST & REV. PLUNGER
2ND & 3RD ROD
SPRING
POPPET
4TH & 5TH ROD
BRACKET
BOLT
INTERLOCK PIN
SPRING
PLUNGER
SPRING
POPPET
BALL
SPRING
PLUNGER
4TH & 5TH FORK
SPRING
6TH & 7TH ROD
SCREW
BRACKET
SNAP RING
SCREW
6TH & 7TH FORK
SCREW
RETAINER
RETAINER
RETAINER
SCREW

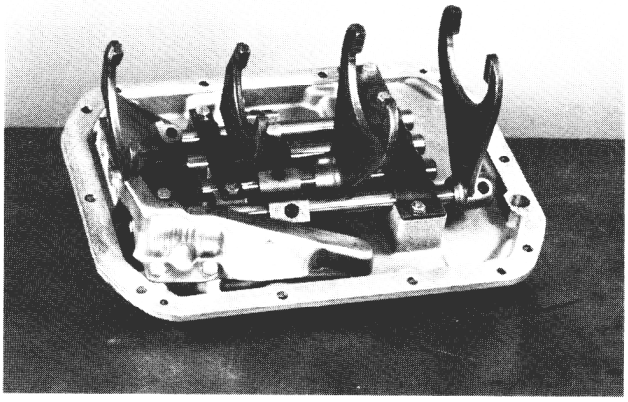

1. Disassembly of the cover begins by placing the cover on a bench with the forks up and in the neutral position.

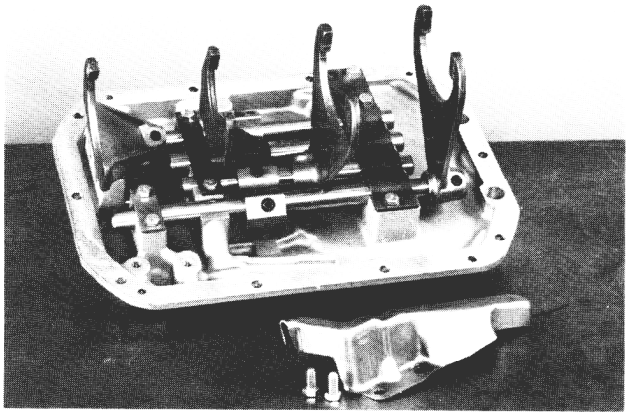

2. Remove the trough. It will make disassembling the rest of the cover easier.

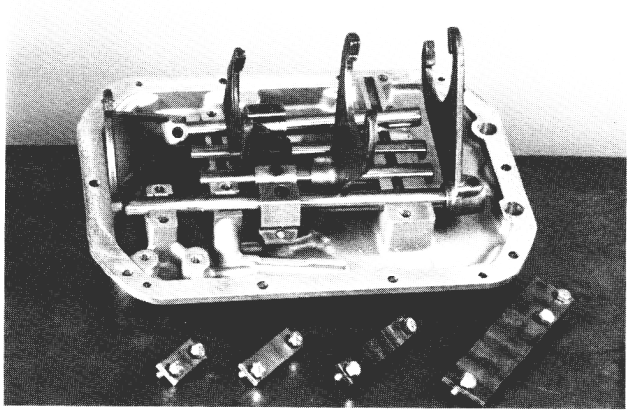

3. Loosen all fork and bracket setscrews, then remove the retainer straps.

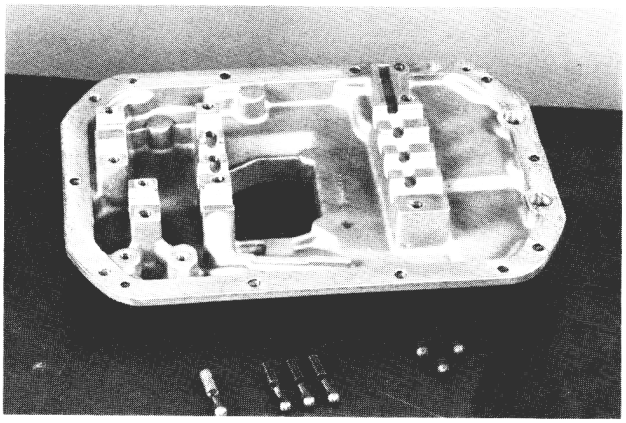

4. All forks lift easily from the cover, Remove the interlocks, poppets and springs. *The first-reverse spring has a different tension than the others, so don 't mix them up.*

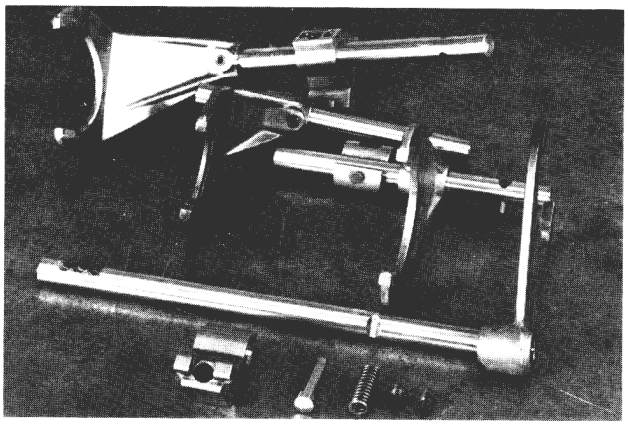

5. Next, disassemble the forks and brackets. Check all parts for wear or damage. Replace them if necessary.

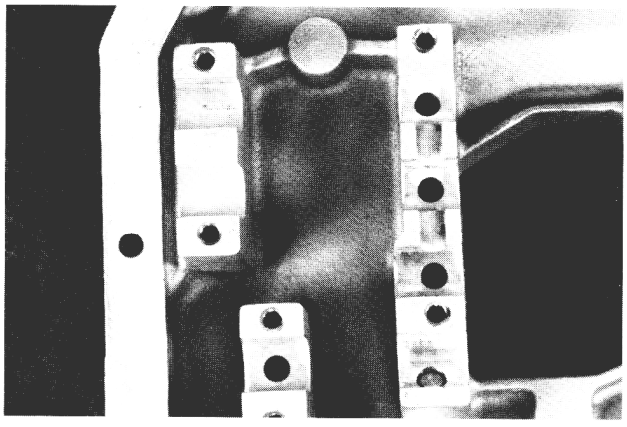

6. Check the poppet and detent holes for burrs or damage.

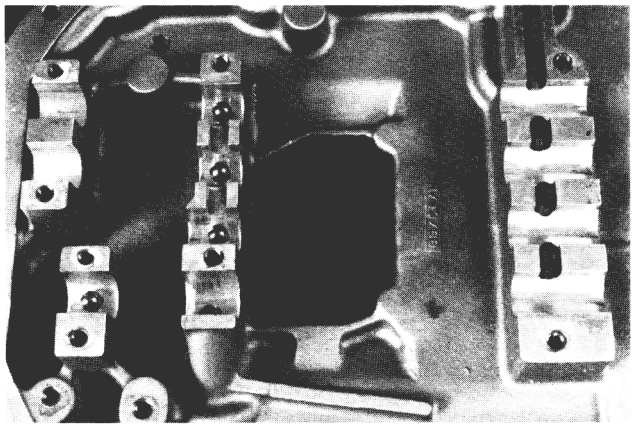

1. Lube all parts prior to reassembly. Clean the cover, then install the springs, poppets and interlocks.

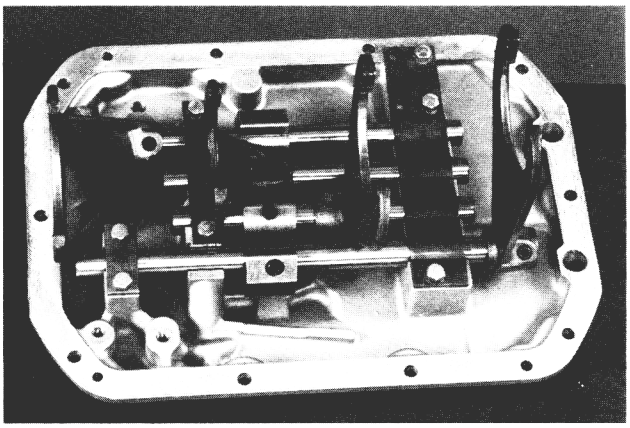

3. Place the fork assemblies into the case. Secure them with the retainer straps. Torque the strap bolts to 34-41 ft. lbs. Move each rod in the cover to confirm that it is moving freely.

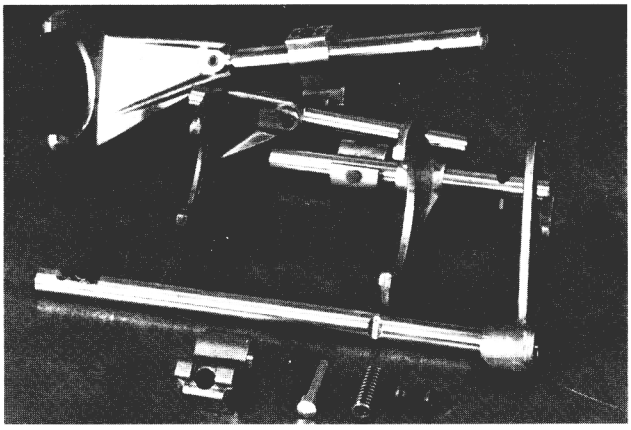

2. Reassemble the forks and brackets. Torque the allenhead setscrews to 26-32 ft. lbs. Torque the second-third bracket screws to 13-18 ft. tbs.

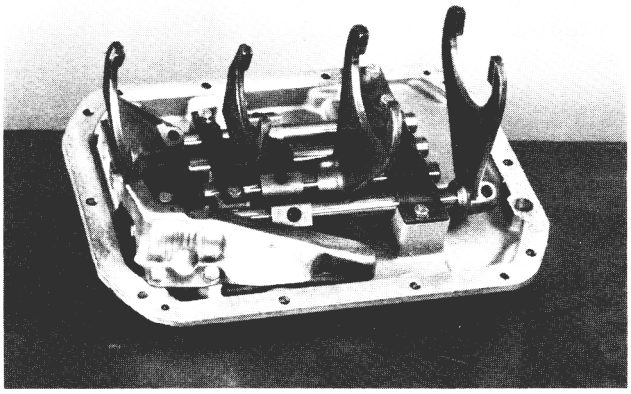

4. Next install the oil trough. Torque the bolts to 34-41 ft. lbs. Check the cover for correct functioning by shifting one fork into gear. If all interlocks were installed correctly, none of the other forks will shift into gear.

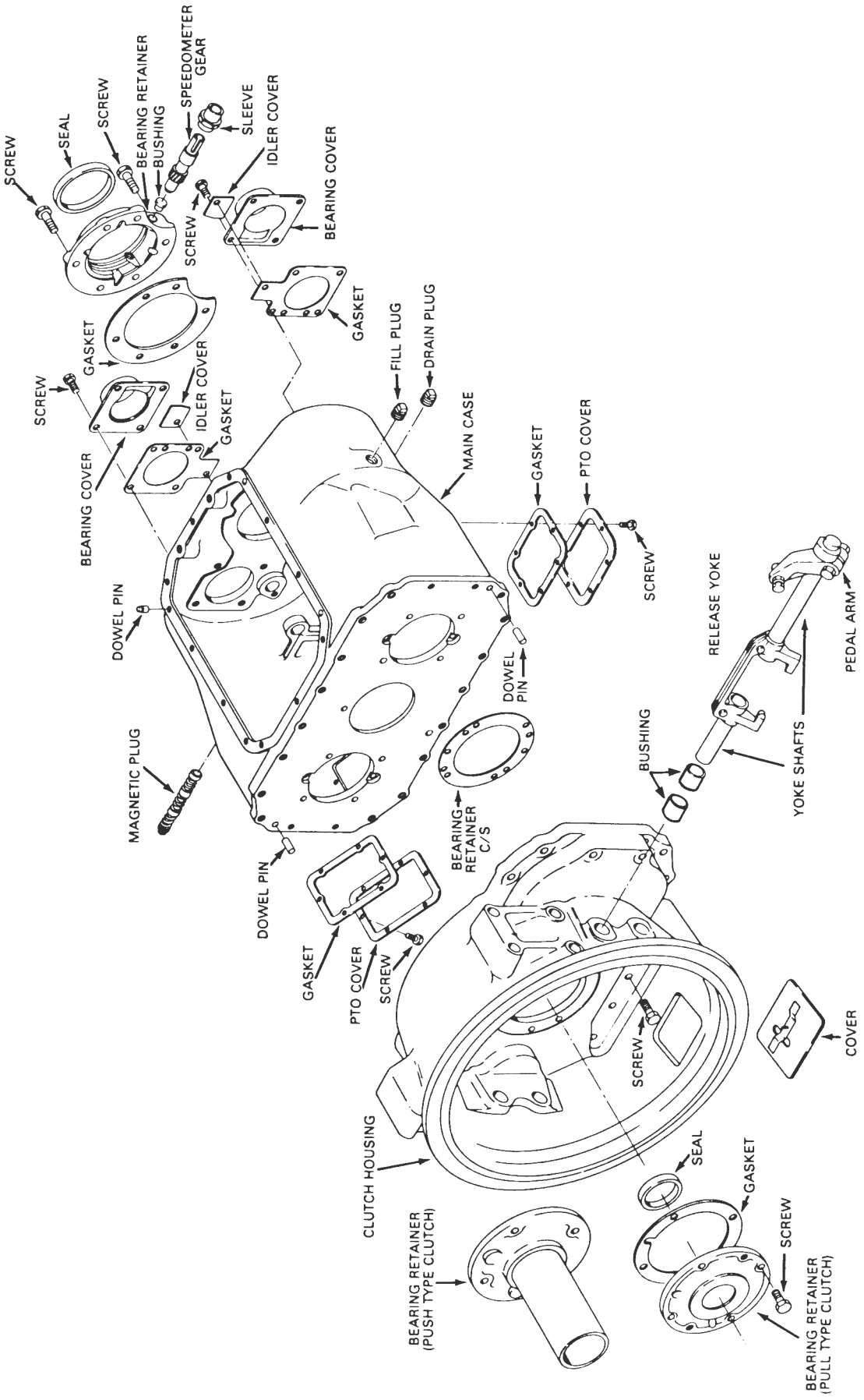
SCREW
SEAL
SCREW
BEARING RETAINER
BUSHING
SPEEDOMETER GEAR
SLEEVE
IDLER COVER
BEARING COVER
SCREW
GASKET
FILL PLUG
DRAIN PLUG
GASKET
IDLER COVER
SCREW
BEARING COVER
GASKET
MAIN CASE
GASKET
PTO COVER
SCREW
DOWEL PIN
DOWEL PIN
RELEASE YOKE
PEDAL ARM
BUSHING
YOKE SHAFTS
MAGNETIC PLUG
BEARING RETAINER C/S
DOWEL PIN
GASKET
PTO COVER
SCREW
SCREW
COVER
CLUTCH HOUSING
SEAL
GASKET
BEARING RETAINER (PUSH TYPE CLUTCH)
SCREW
BEARING RETAINER (PULL TYPE CLUTCH)

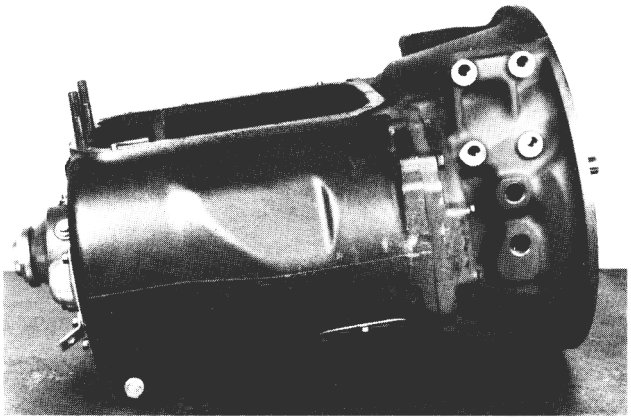

1. Remove the capscrews and shifter housing. If the shifter housing is a forward control, shift the transmission into sixth gear.

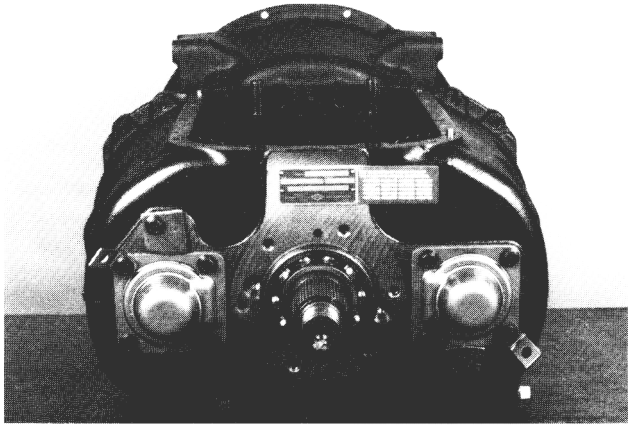

2. **Remove the output bearing cap and gasket,**

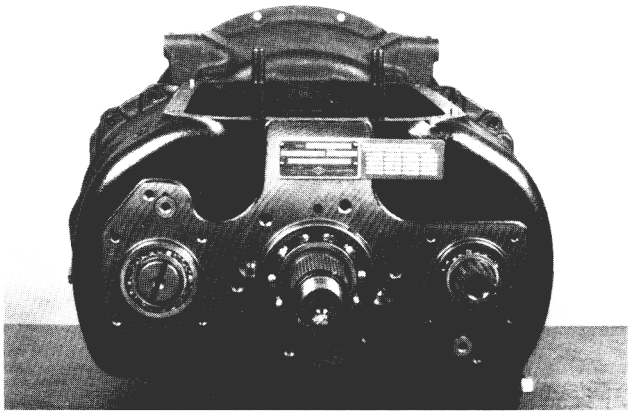

3. **Remove the countershaft bearing retainers.**

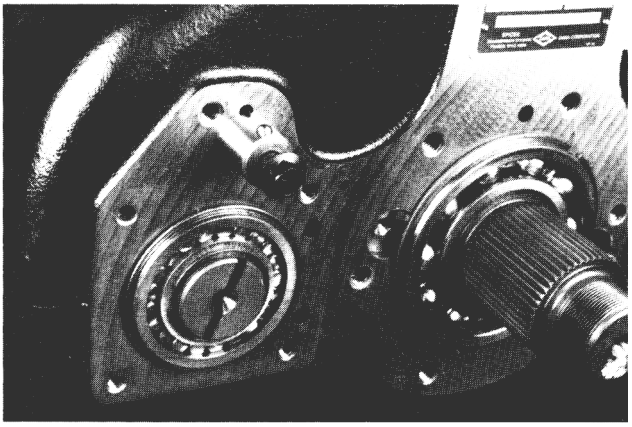

4. **Insert a capscrew into the upper reverse idler shaft for removal. Don't lose the lockball in the shaft.**

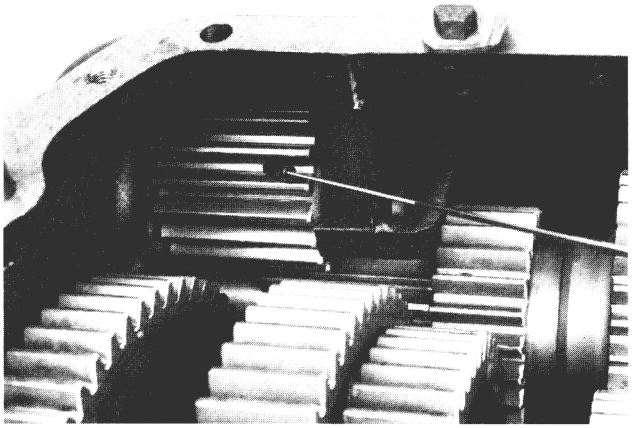

5. **Roll the upper reverse idler gear toward the side of the case,**

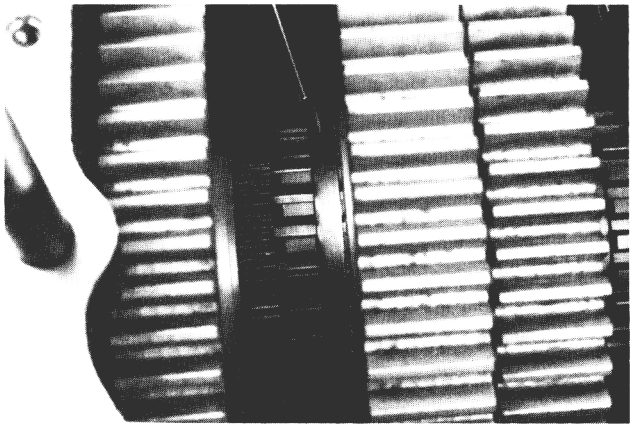

6. **Engage the first-reverse collar into first gear,**



7. Remove the input bearing cap, gasket and input shaft,

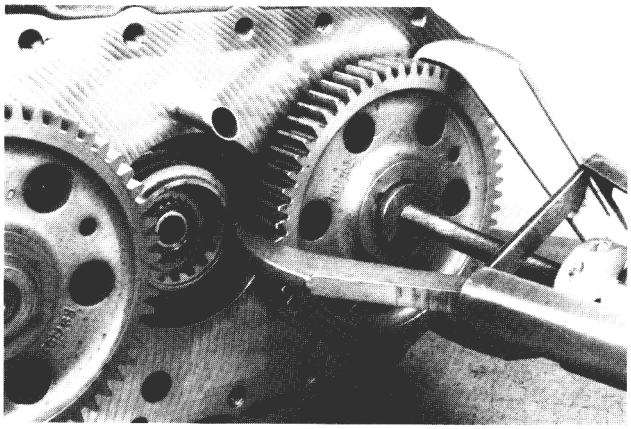

10. Remove the countershaft drive gears with the aid of a large puller.

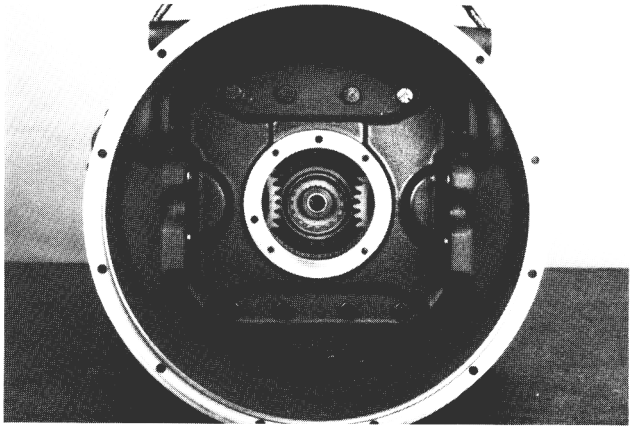

8. **Next remove the clutch housing bolts and separate the housing from the case. Use of a chain hoist is recommended due to the weight of the housing.**

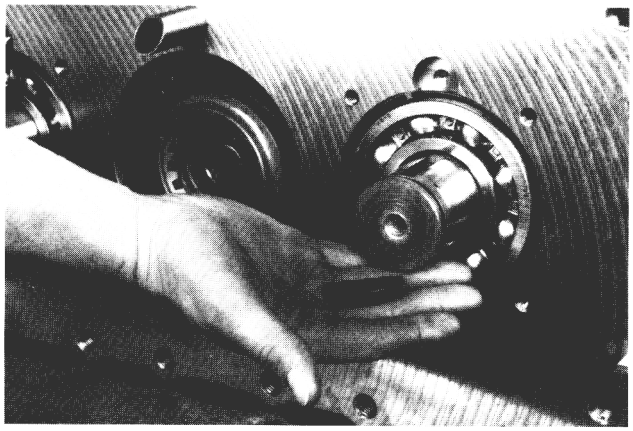

11. Continue by removing the countershaft driver gear countershaft keys.

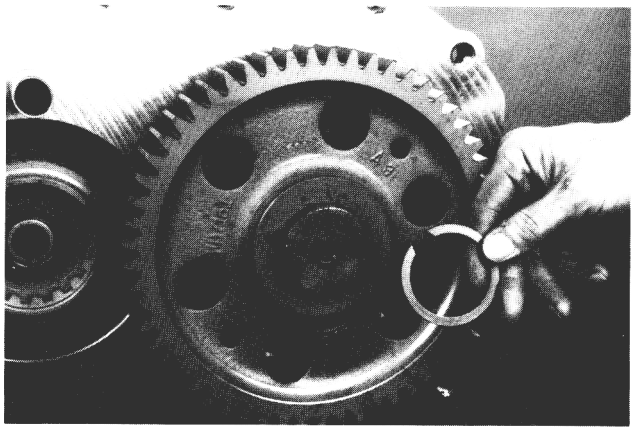

9. **Remove the snap rings from the countershafts,**

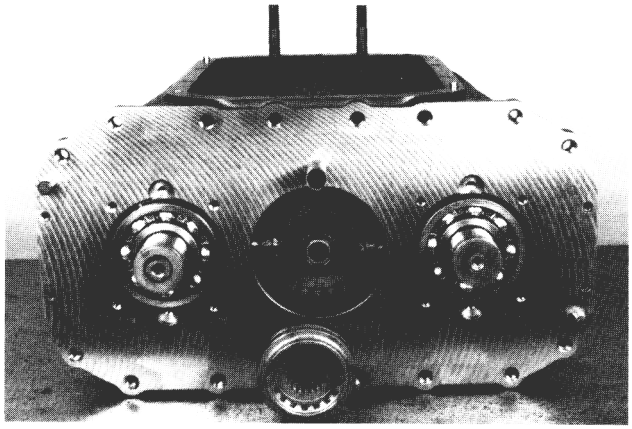

12. **The sixth-seventh clutch collar may be removed from the mainshaft.**

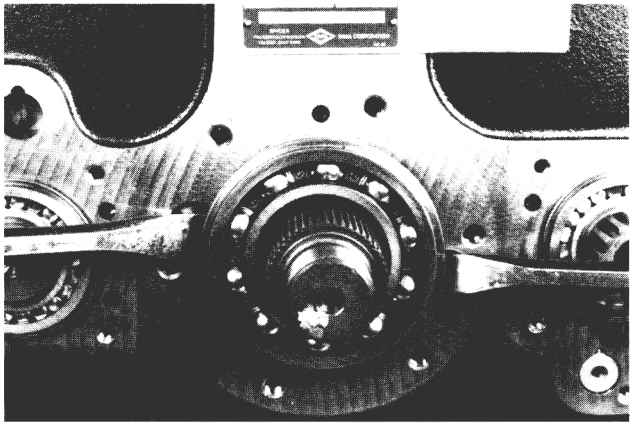

13. **Place a sling around the second-third mainshaft collar and use a hoist to provide support during bearing removal. The milled slots also help make output bearing removal easier.**

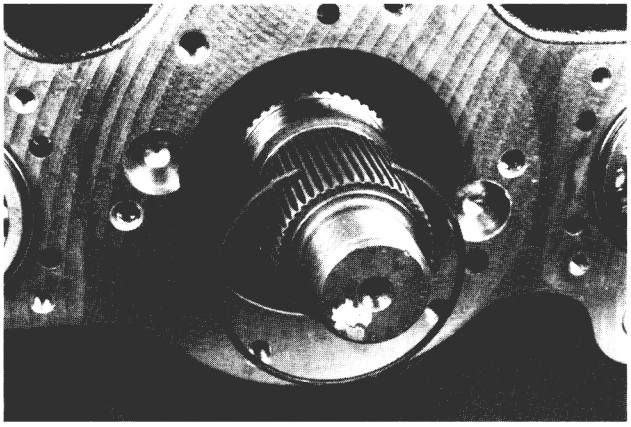

16. Remove the remaining gear bore snap ring.

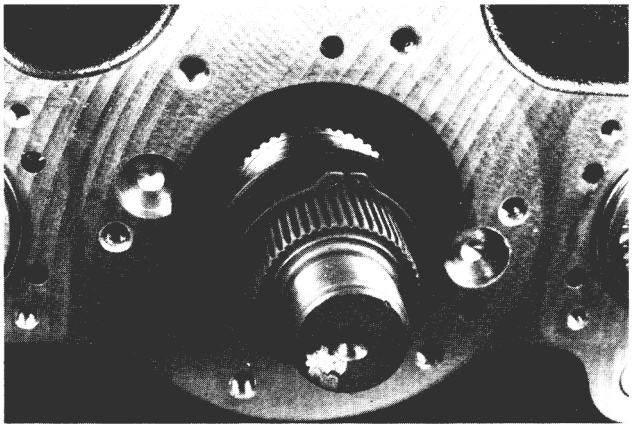

14. **Remove the mainshaft snap ring and the internally splined thrust washer.**

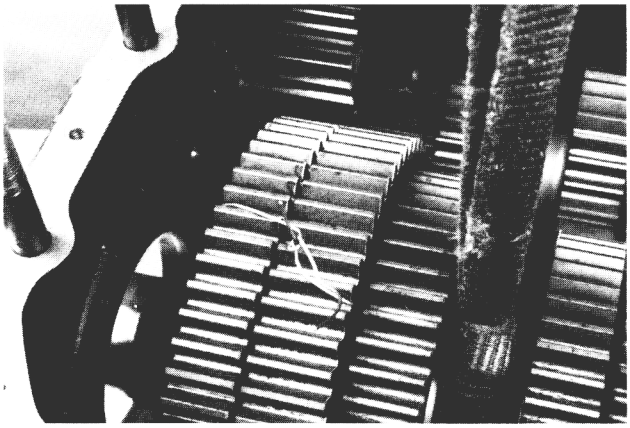

17. **Butt first and reverse gears together. Secure them with lockwire to provide the necessary clearance for mainshaft removal.**

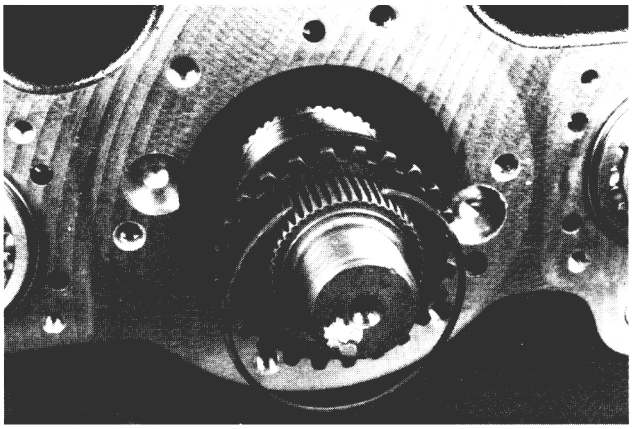

15. Next, remove the gear bore snap ring and both the externally and the internally splined thrust washers.

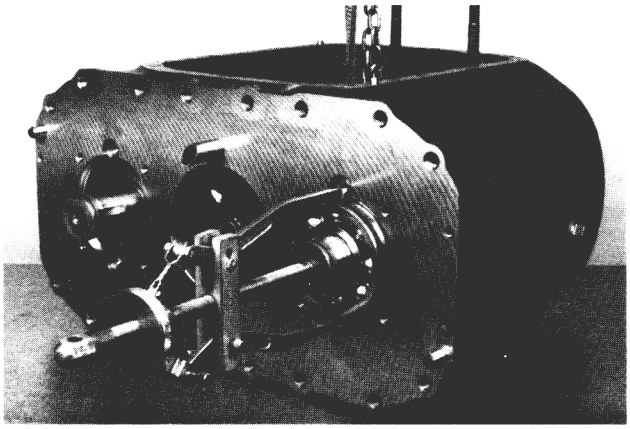

18. Use a puller to remove the countershaft front bearings.

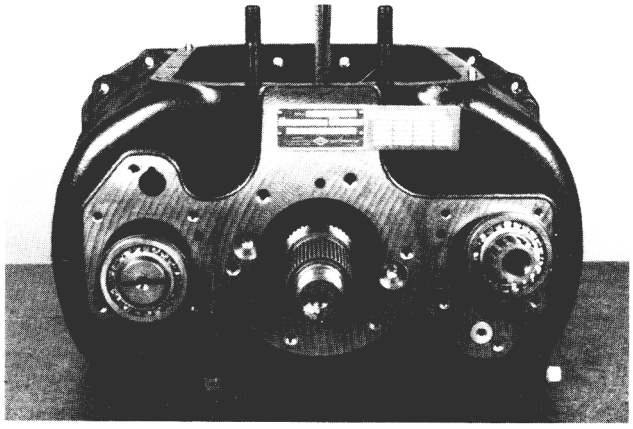

19. **Move the countershafts to the rear as far as possible.**

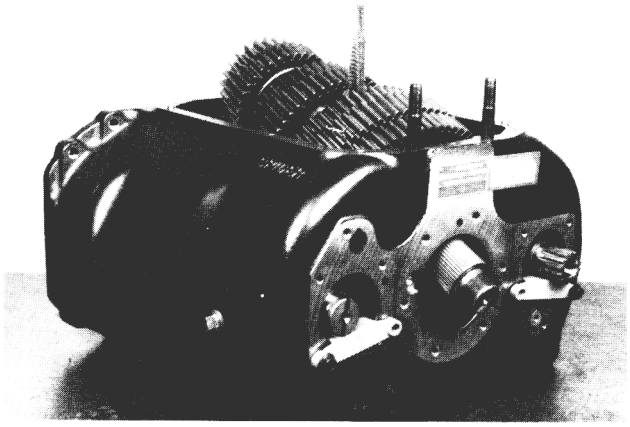

22. **Lift the mainshaft assembly out of the case.**

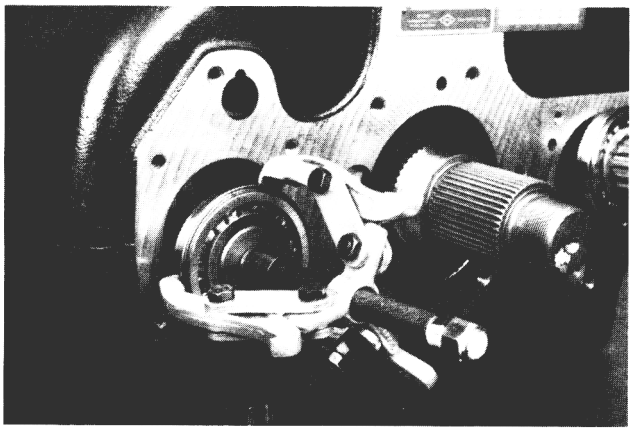

20. **Install a puller for bearing removal.**



23. **Remove the upper reverse idler gear.**

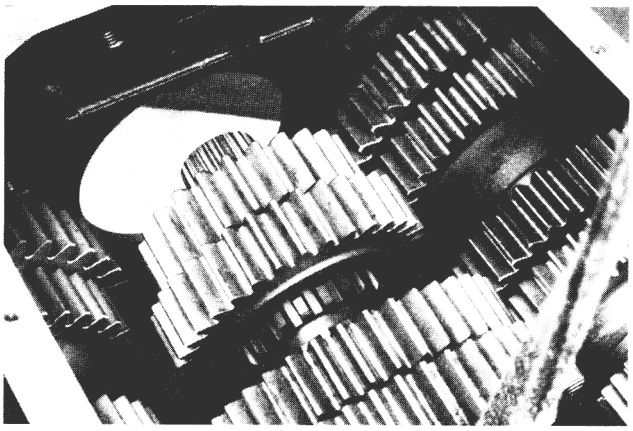

21. **To provide necessary clearance for mainshaft removal, move both countershafts forward and toward the side of the case. Countershaft alignment blocks can also be used to help restrain the countershafts.**

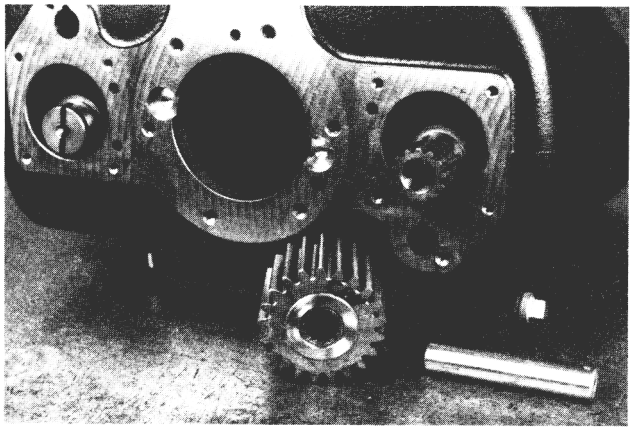

24. **Remove the lower idler shaft and Idler gear.**

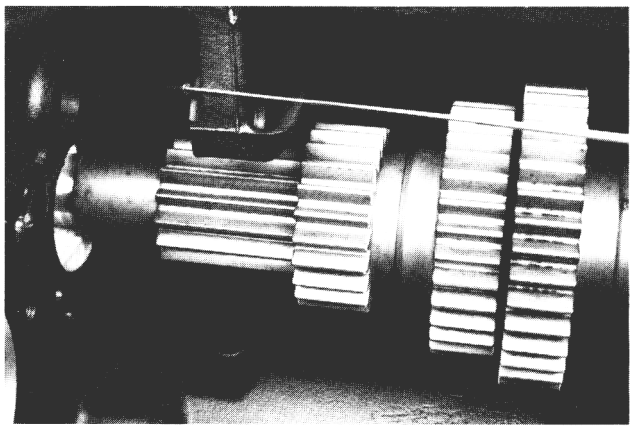

25. **Because of this upper idler boss interference, it is easier to remove the right side countershaft first. Then remove the left side countershaft.**

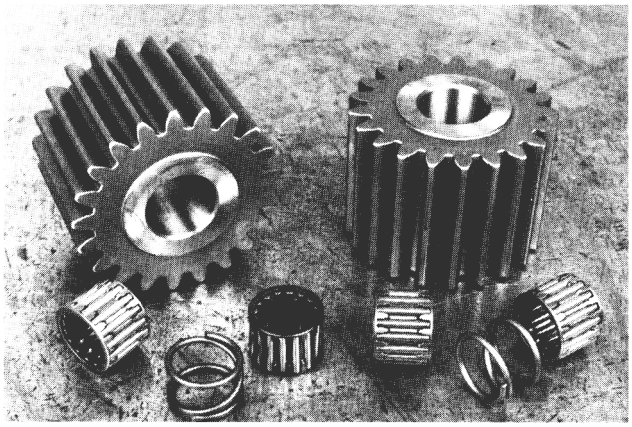

26. Check both idler gears and bearings for excessive wear.

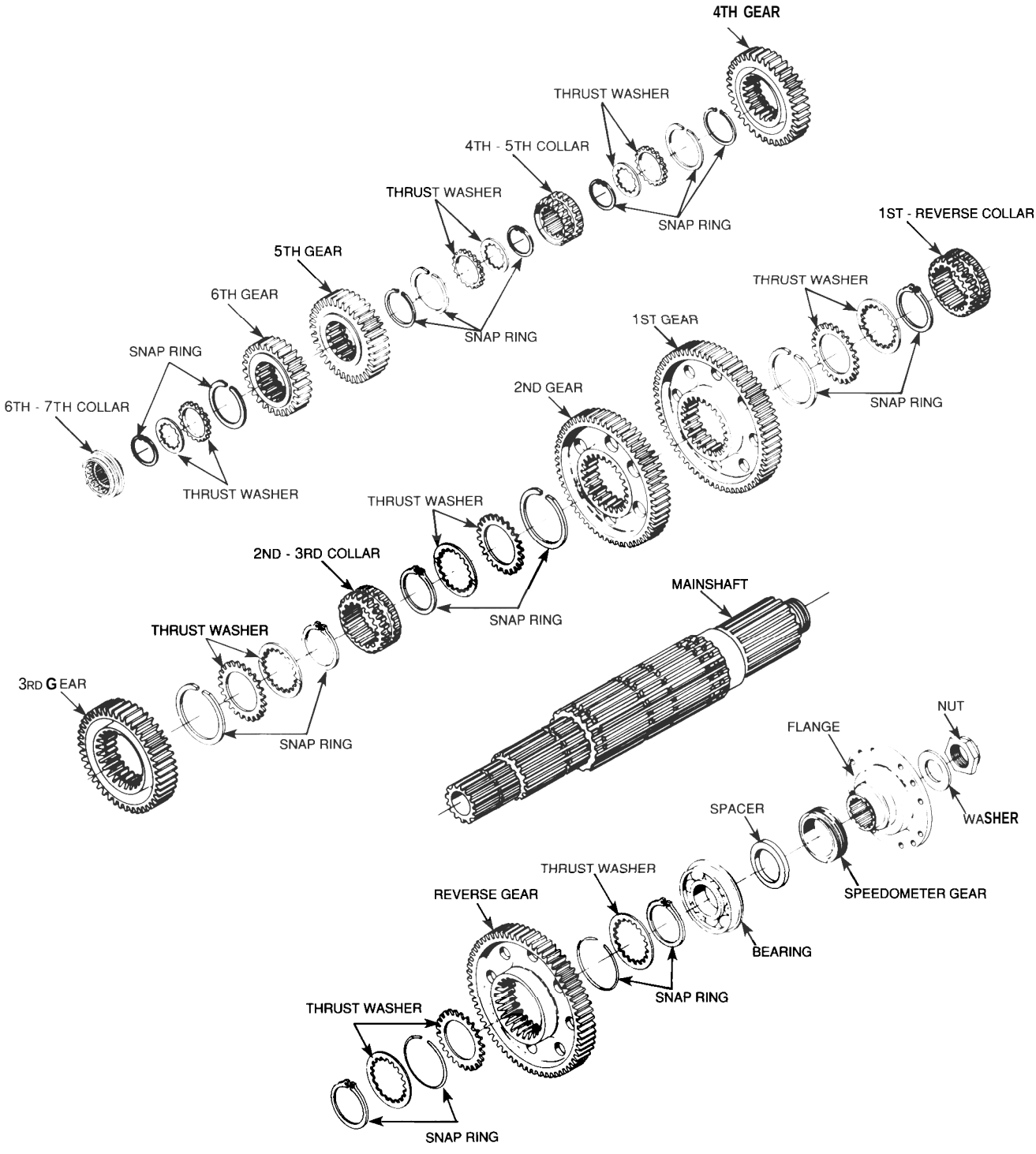
4TH GEAR
THRUST WASHER
4TH - 5TH COLLAR
THRUST WASHER
SNAP RING
1ST - REVERSE COLLAR
5TH GEAR
6TH GEAR
THRUST WASHER
1ST GEAR
SNAP RING
SNAP RING
SNAP RING
6TH - 7TH COLLAR
2ND GEAR
THRUST WASHER
THRUST WASHER
2ND - 3RD COLLAR
SNAP RING
MAINSHAFT
THRUST WASHER
3RD GEAR
SNAP RING
NUT
FLANGE
WASHER
SPACER
SPEEDOMETER GEAR
THRUST WASHER
REVERSE GEAR
BEARING
SNAP RING
THRUST WASHER
SNAP RING

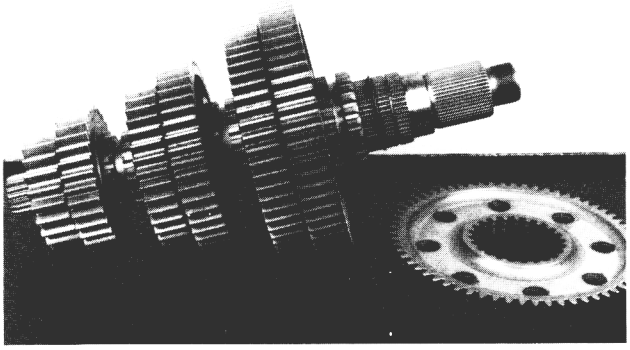

1. Begin disassembly of the mainshaft by cutting the lockwire and removing reverse gear.

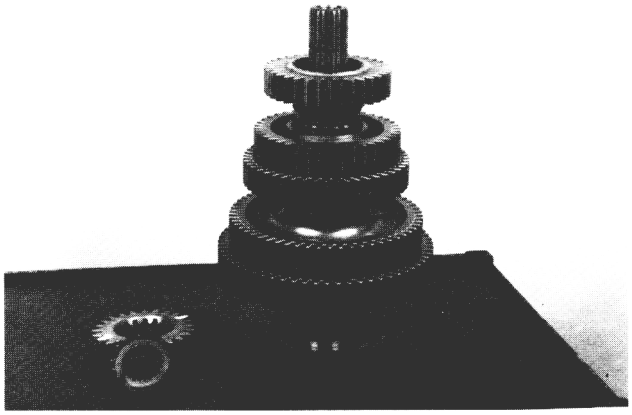

2. Remove the snap ring. Lift off sixth gear. Internally and externally splined thrust washers are in the gear. The internal washer teeth face toward the shaft. The external washer teeth face away from the shaft. A gear bore snap ring remains in the gear.

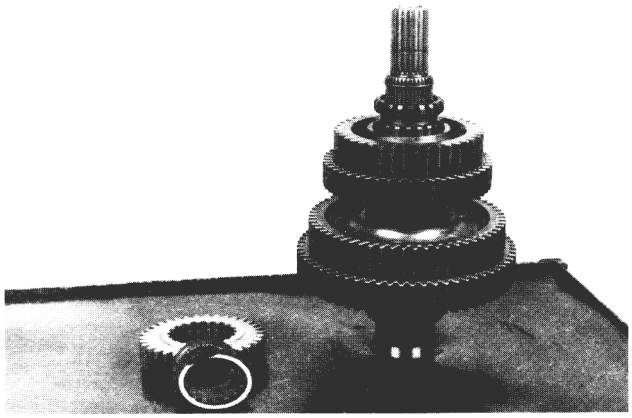

3. Remove fifth gear. There are two thrust washers and a snap ring inside the gear. There is also a gear bore snap ring inside each gear except reverse gear. This snap ring need not be removed unless otherwise specified.

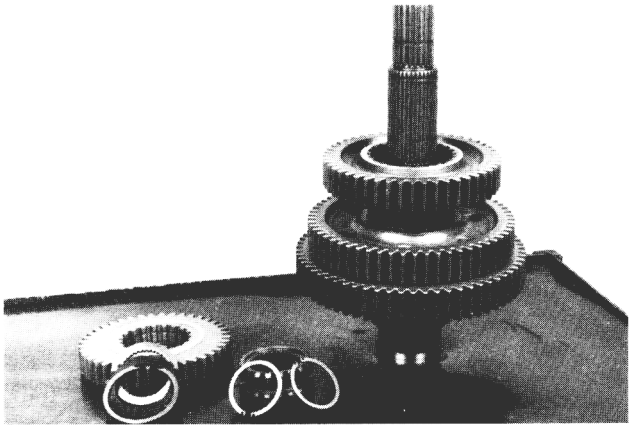

4. **Remove the mainshaft snap ring. Lift fourth-fifth shift collar off the shaft. Remove the snap ring and fourth gear. inside the gear are two thrust washers and a snap ring.**

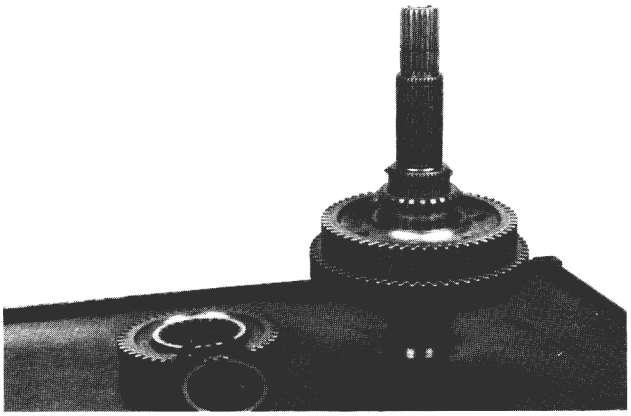

5. Continue by removing third gear. Two washers and a snap ring are inside it.

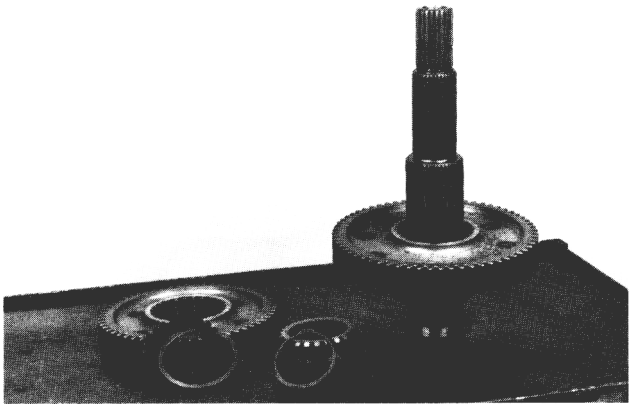

6. Remove the snap ring and second-third shift collar. Remove the next snap ring and lift second gear off the shaft. The gear contains two washers and a snap ring.

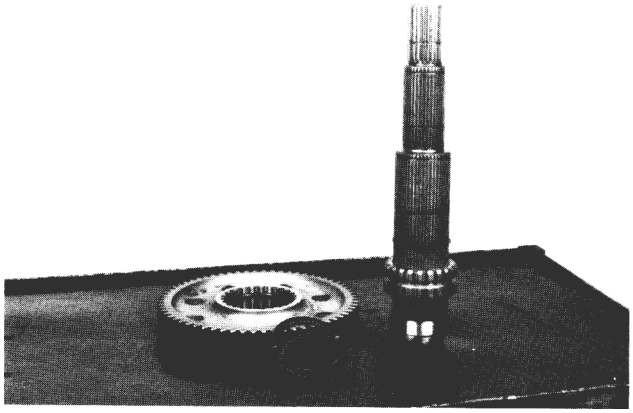

7. Continue by removing first gear. Again, there are two washers inside the gear. There is also a snap ring inside the gear, but there is no need to remove it.

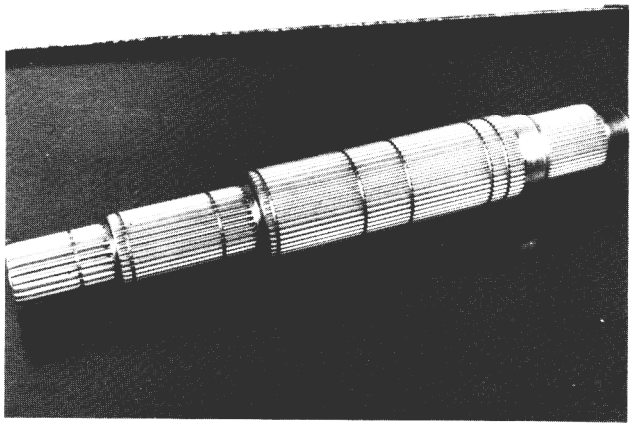

10. Notice that the mainshaft has rolled involute splines. They provide greater strength which means longer life.

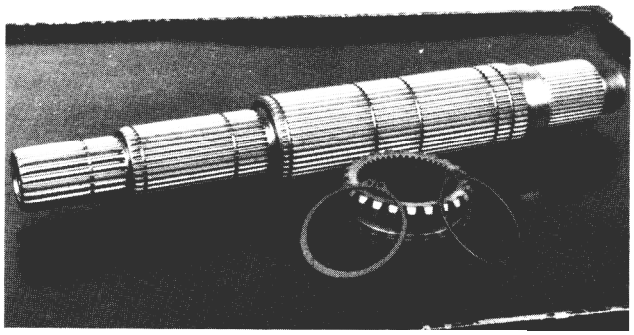

8. Remove the two snap rings and the first-reverse shift collar from the shaft.

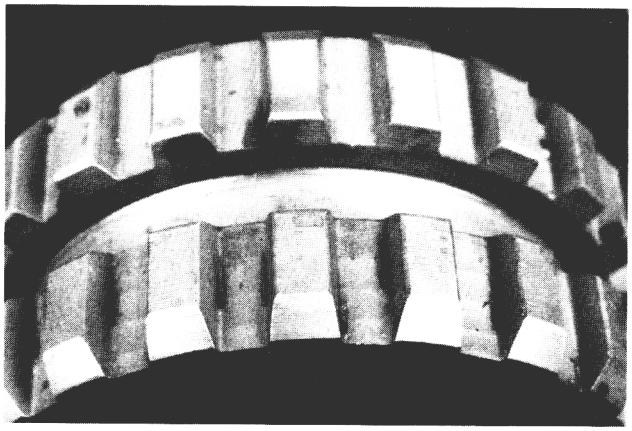

11. The fourth-fifth and sixth-seventh shift collars and gears have Taper-Lok™ gear locks. They are designed to draw gears into perfect alignment and eliminate gear jump-out.

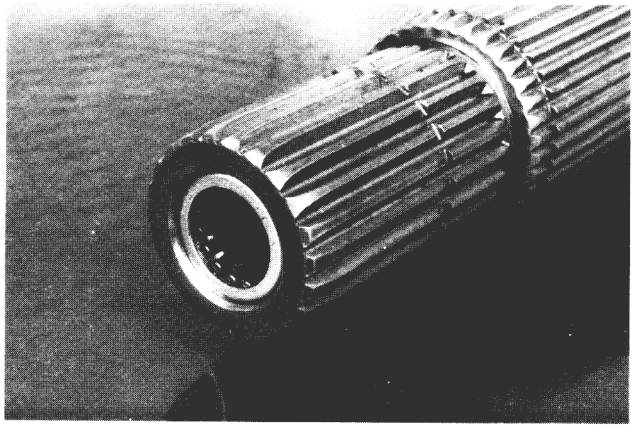

9. Remove the pocket bearing with an adequate puller.

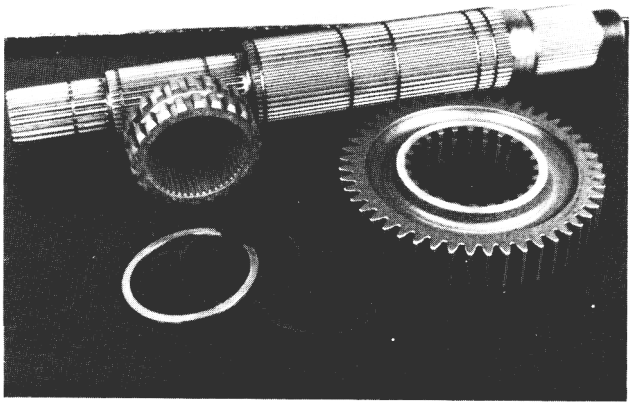

12. Clean all parts and inspect them for wear or damage. Replace them if necessary. Remember: if a gear is damaged and is going to be replaced, also replace its mating countershaft gears.

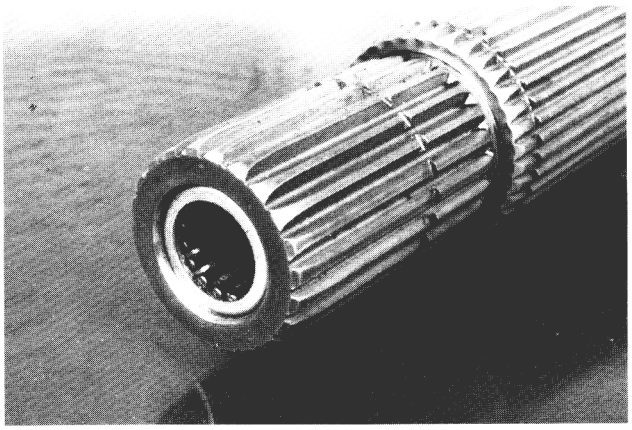

1, Install the pocket bearing to a depth of ,070".

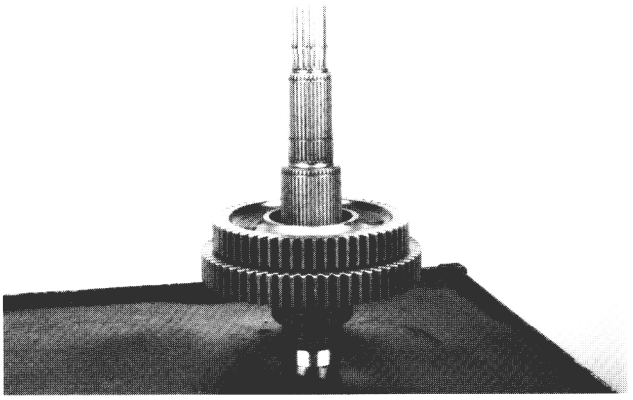

4. Place second gear on the shaft, Install the externally and internally splined thrust washers into the gear. Secure the assembly with a snap ring.

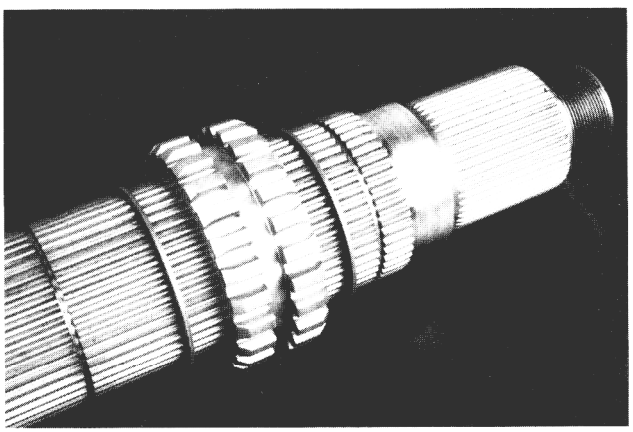

2. Lube all parts prior to reassembly. Install the first-reverse snap ring in the second groove from the bottom of the shaft. Slide the first-reverse collar into place and secure it with a snap ring.

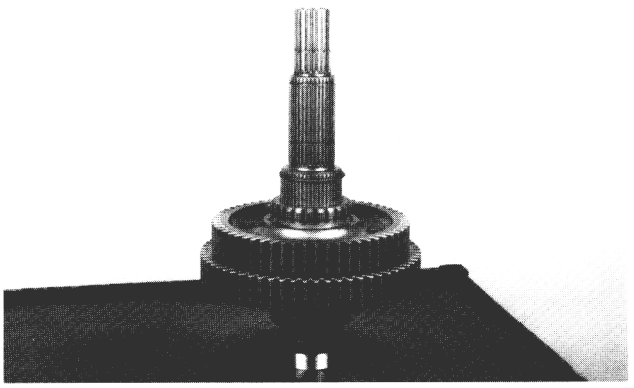

5. Install the second-third shift collar and snap ring.

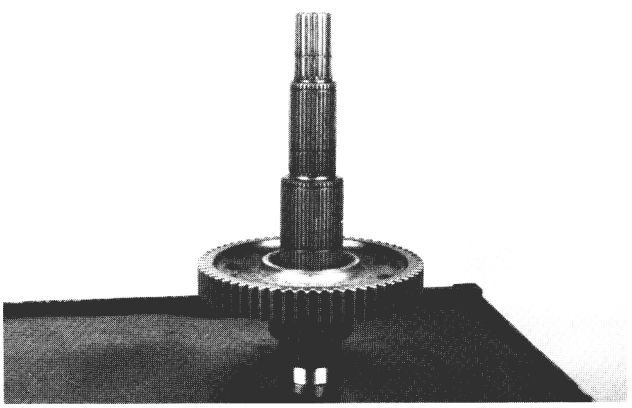

3. Place the internally and externally splined thrust washers on the shaft. The internally splined thrust washer should rest against the mainshaft snap ring.

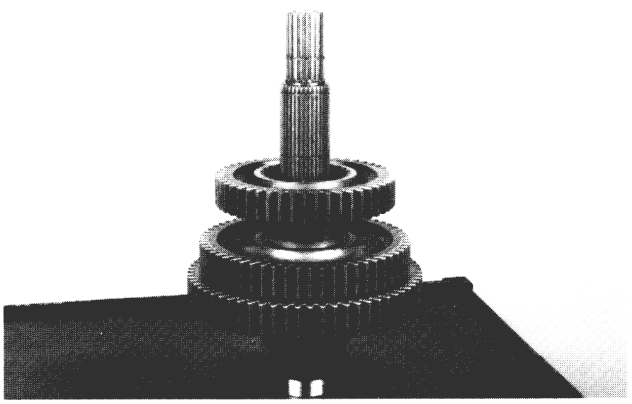

6. Place an internally splined washer and externally splined washer on the shaft. Install third gear.

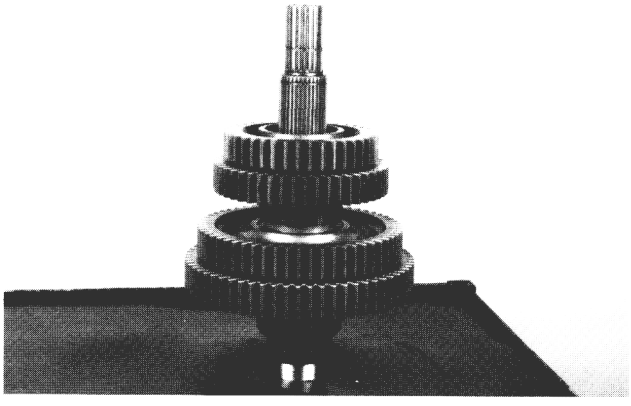

7. Place the externally splined thrust washer, snap ring and internally splined thrust washer in the gear. Slide fourth gear onto the shaft. Secure it with a snap ring.

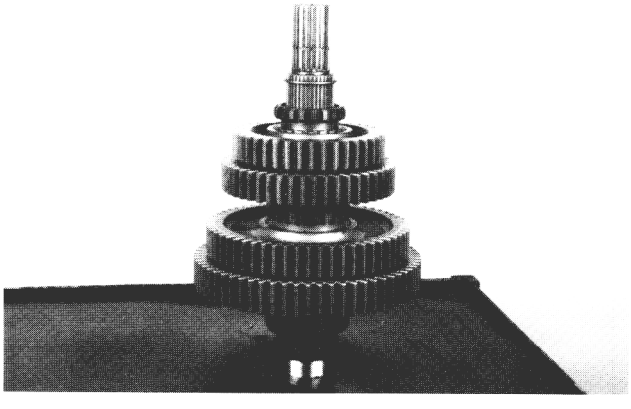

8. The fourth-fifth shift collar and snap ring are installed next.

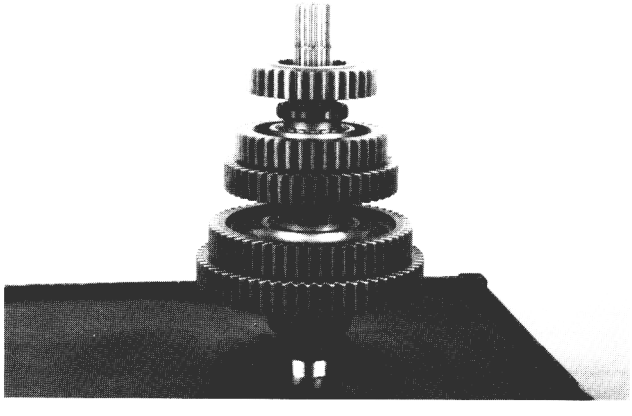

9. Place the externally splined thrust washer, snap ring and internally splined thrust washer in the gear. Slide fifth gear onto the shaft. Secure it with a snap ring.

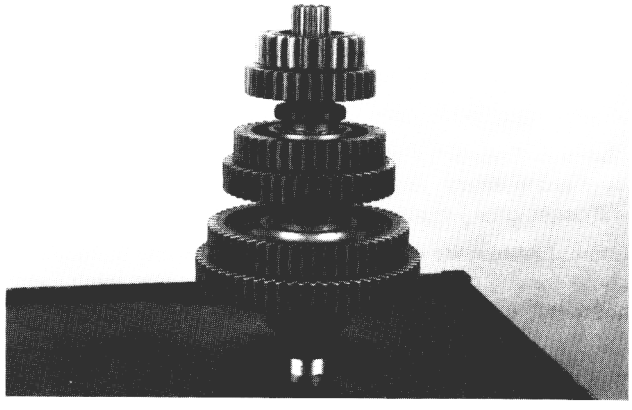

10. Place the externally splined thrust washer, snap ring and internally splined thrust washer in the gear. Slide sixth gear onto the shaft. Secure it with a snap ring.

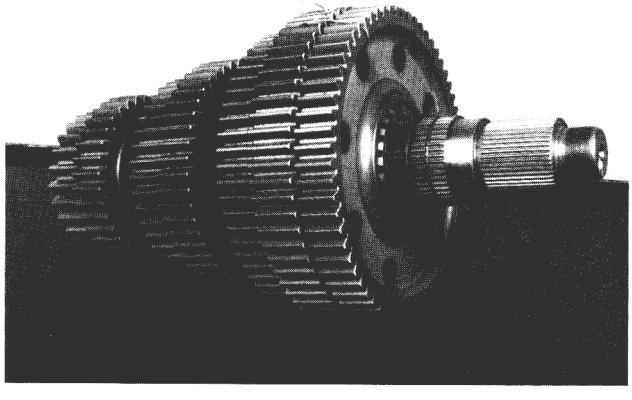

11. Place the shaft on the bench. Install reverse gear, Butt first and reverse gears together, and secure them with lockwire. This will provide the necessary clearance to install the mainshaft back into the case.

Inspection

Prior to reassembling the mainshaft, certain individual parts should be examined. Parts damaged from previous service should be eliminated to insure maximum rebuild life.

These suggested inspection procedures should be followed:

Clutch Collars: Both the internal and external teeth must have sharp edges. Rounded corners or excessive chipping will cause gear jumping. Also, examine fork slots for wear.

Gears: Examine for broken or cracked operating teeth. Also, check for any unusual wear patterns. Clutching teeth must not show excessive wear.

Thrust Washers: Check for flatness or excessive face wear (cracks, scoring, etc.)

Snap Rings: Examine for distortion or loss of tension. New snap rings are recommended with every rebuild.

Mainshaft: Check spline gearlocks for sharp corners. Worn or ironed out gearlocks will produce gear jumping. Also, check for chipped splines at snap ring grooves.

NOM. THREAD SIZE (DIA.)		PART NAME	WRENCH TORQUE FT. LBS.			
			NON-LOCKING TYPE		LOCKING TYPE (Bonded Nylon Patch)	
in.	mm		MIN.	MAX.	MIN.	MAX.
.250	6	Capscrew or Nut	7	10	10	13
.312		"	13	17	20	24
.375	1 0	"	25	32	34	41
.438		"	40	50	52	62
	12	"			60	80
.500		"	60	80	78	98
	14	"			80	100
.562		"	90	115	112	137
.625		"	120	150	150	180
.750		"	200	250	240	290
1.250		Nut			400	450
1.375		"			550	600
1.750		"			550	600
		PTO Aperature Cover Capscrews				
.375		Capscrew	10	15	16	24
.438		Capscrew wlGasket 97-324-2	20	25	36	41
.438		Capscrevv wlGasket 22p22	20	25	29	34
		Shift Fork Or Brecket Setscrews	Lockwire Type			
.375		Setscrew	25	32	34	41
.436		"	25	32	34	41
.438		"	40	50	52	62
		Idler Cover	Self Tapping			
	10		25	32		

On all transmissions with .750-14 NPTF drain plugs, the drain plug torque should be 50-65 ft. lbs. The only exceptions are the ES42-5, ES52-5, CM40, CM49 and CM55 Models. The torque on these units should be 30-45 ft. lbs.

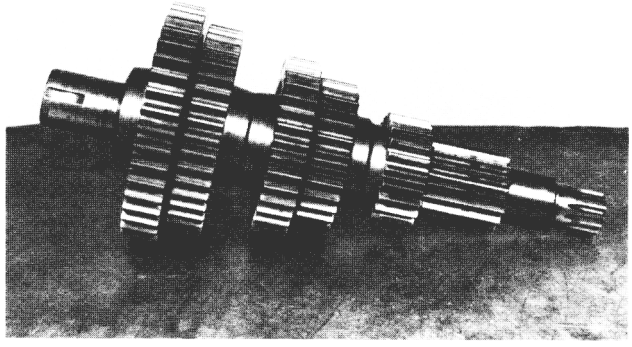

1. This view shows the hub direction of the gears. First-reverse gear is an integral part of the shaft, while the remaining gears are secured with individual woodruff keys under each gear.

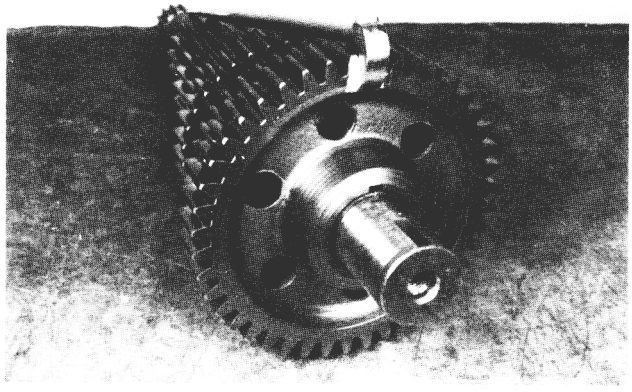

2. **If you place a straight edge between these painted teeth, every gear on the countershaft will be in line. When you set the countershafts in time, these marks will be directly across from each other.**

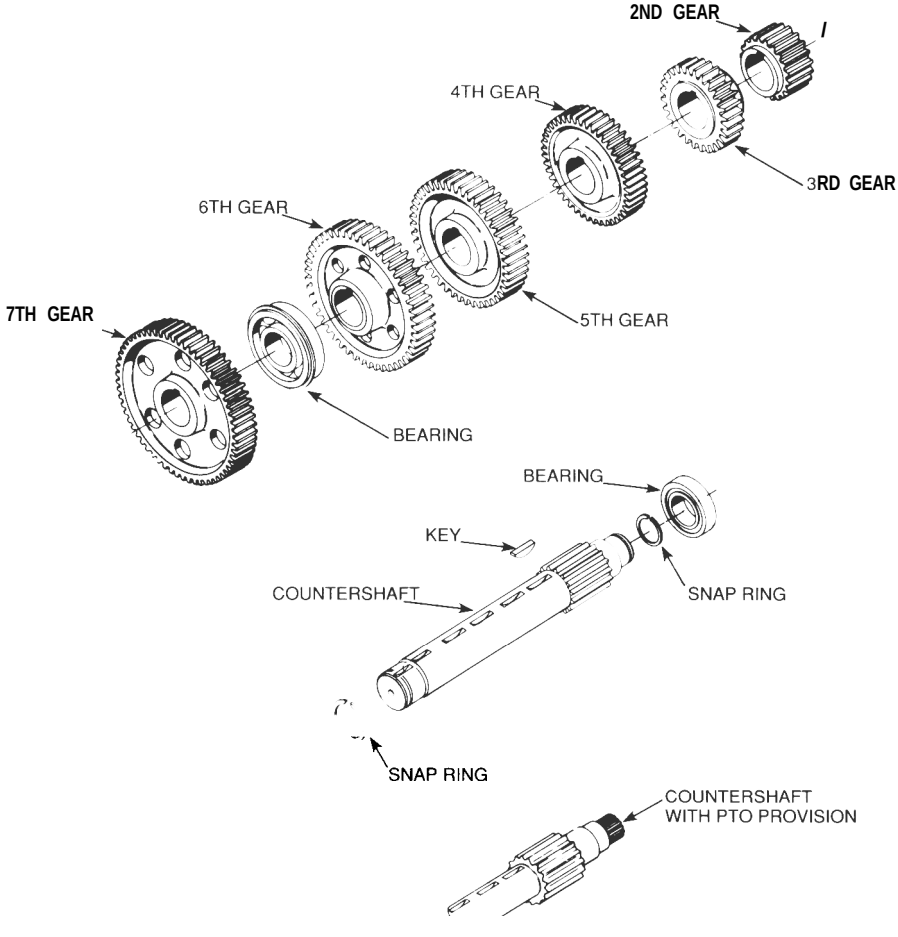

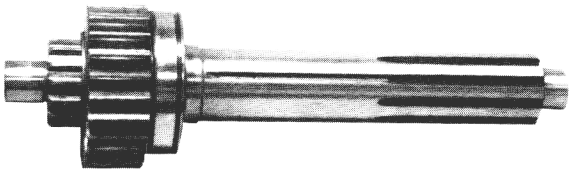

1. The input gear, shaft, and bearing are separate components secured with 2 snap rings.

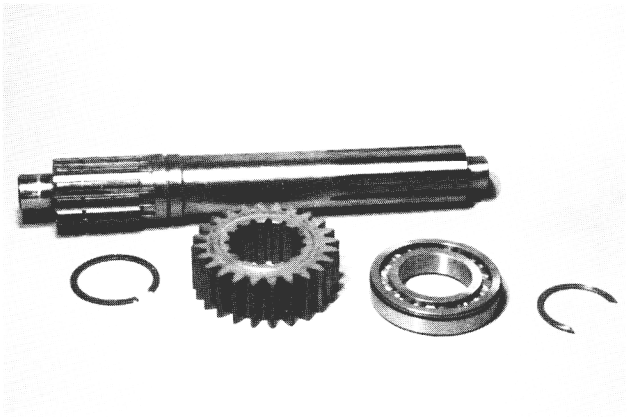

2. This view shows the input subassembly when disassembled.

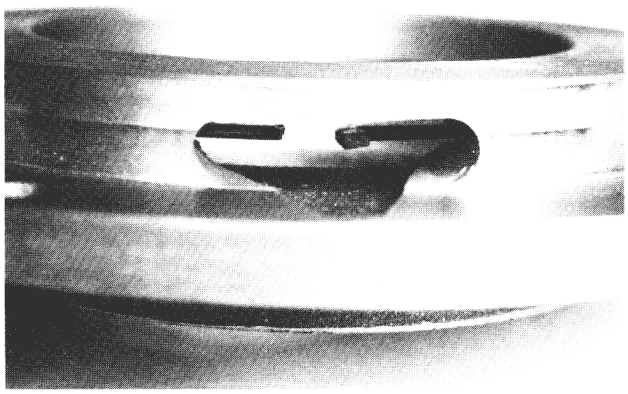

3. When reassembling, first install the snap ring into the input bearing cap.

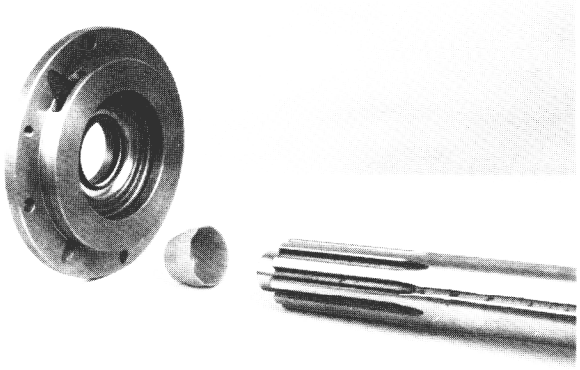

4. **Then insert the input shaft through the bearing retainer. Use an installation sleeve to protect the seal. Do not use grease on this seal. The shaft and seal must be oil free when mated to provide an effective seal.**

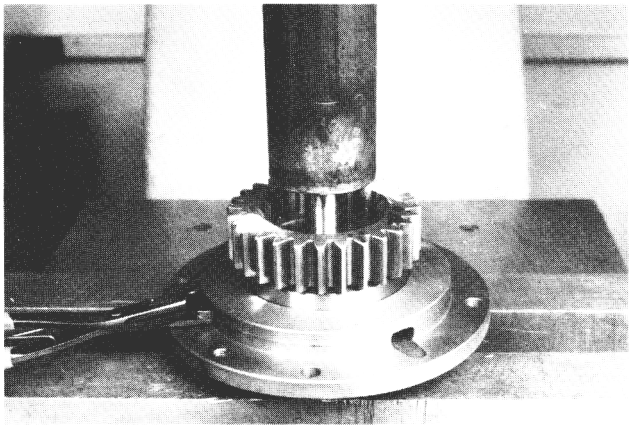

5. **Expand the snap ring through the provided slot, while pressing the input shaft assembly into the bearing retainer. CAUTION should be used during this procedure. (This procedure is the same for all 7-speed, 2-piece input gears.**

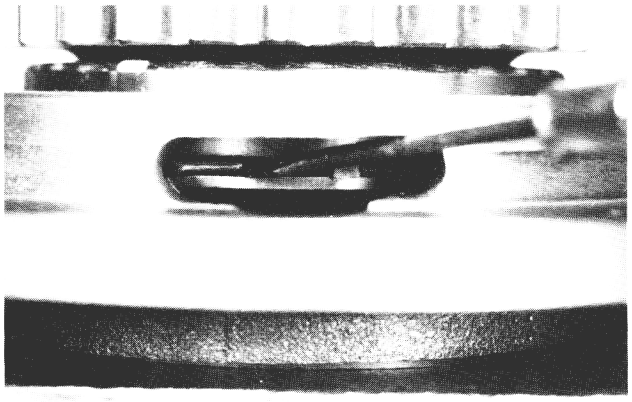

6. **When snap ring grooves on the input shaft bearing and bearing retainer are in proper alignment, discontinue pressing and seat the snap ring in place. Inspect the assembly to assure the snap ring is properly seated and secured.**

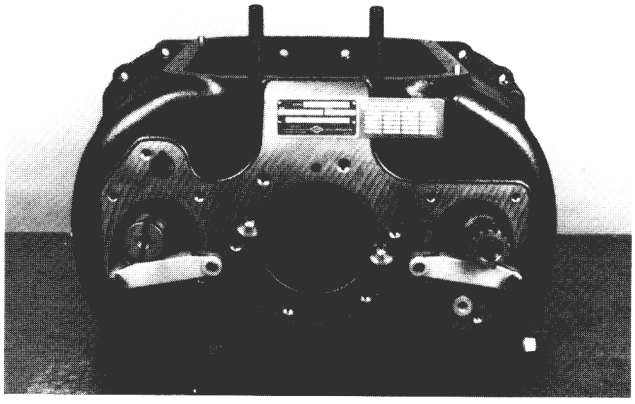

1. Reassembly of the unit begins by placing the lower reverse idler gear into the case. Then install the left side countershaft and the right side countershaft. Use of alignment blocks is recommended.

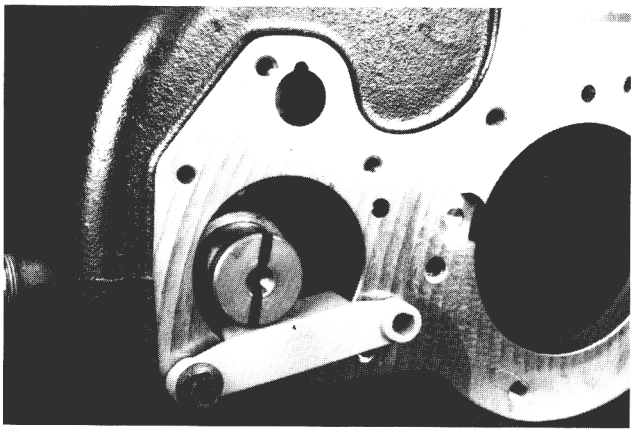

2. **These blocks make timing the gears easier, They also help provide the necessary clearance for mainshaft installation.**

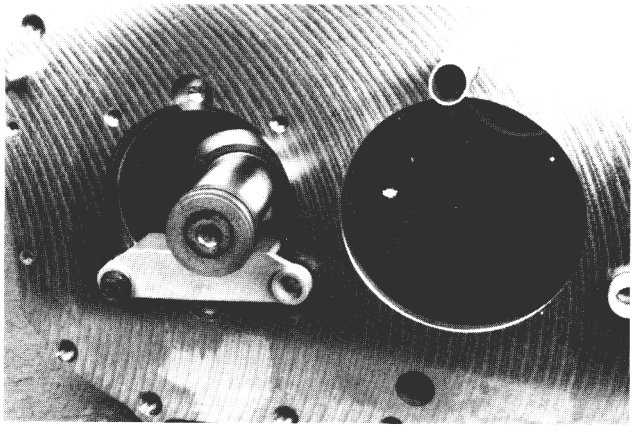

3. Align the countershaft timing marks toward the center of the case.

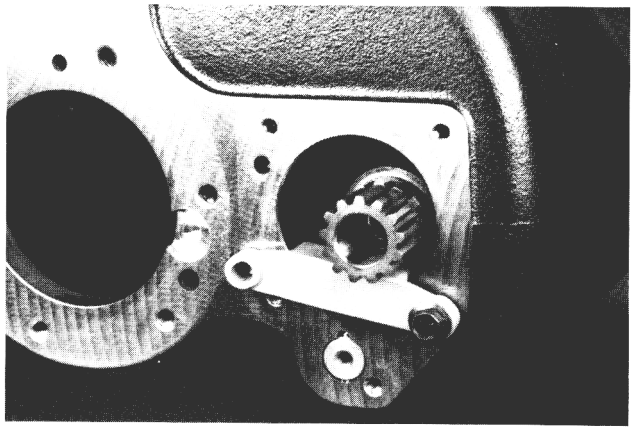

4. **Insert the lower idler shaft with lockball.**

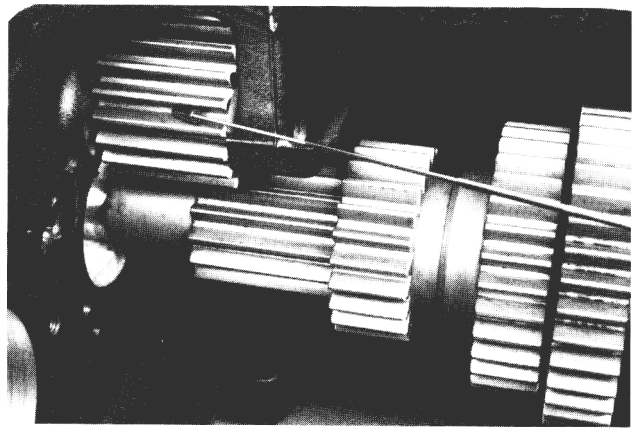

5. **Set the upper reverse idler gear into the case, but don't install the idler shaft yet.**

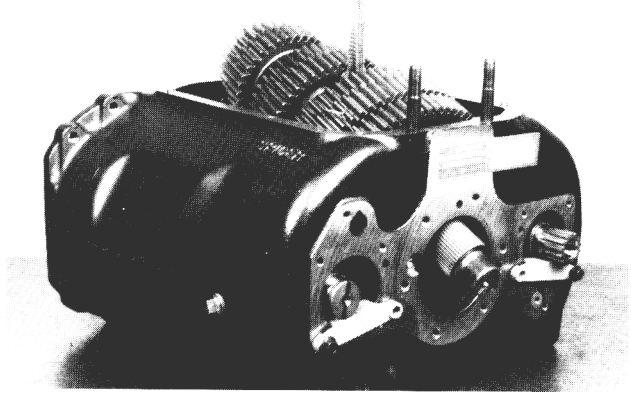

6. Lower the mainshaft assembly into the case.

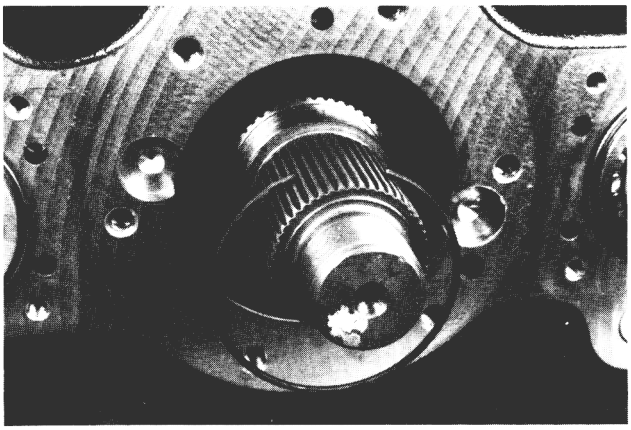

7. Cut the lockwire and slide the reverse gear rearward. install the first gear bore snap ring.

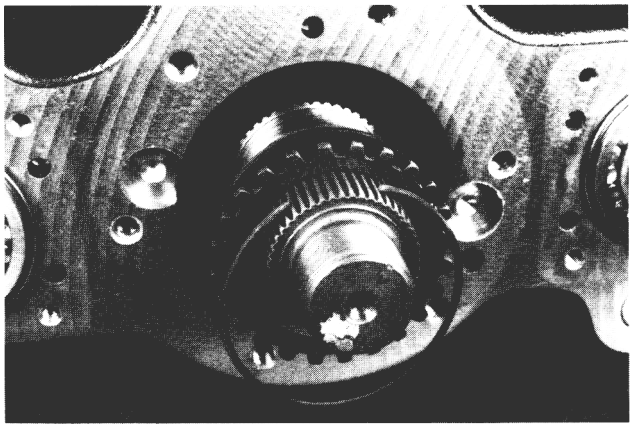

8. Next, install the internally and externally splined thrust washers. Secure them with the gear bore snap ring.

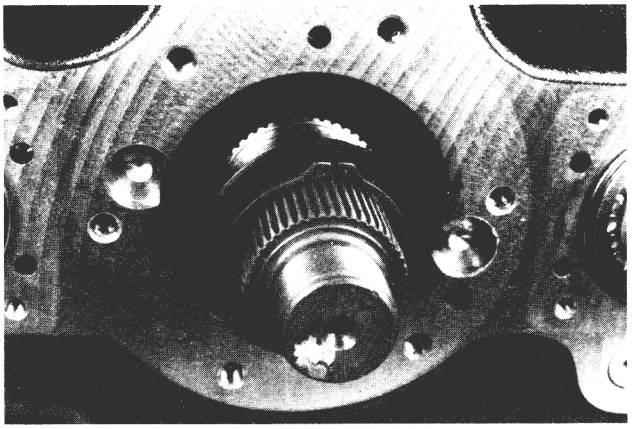

9. Install the internally splined thrust washer and secure it with the mainshaft snap ring.

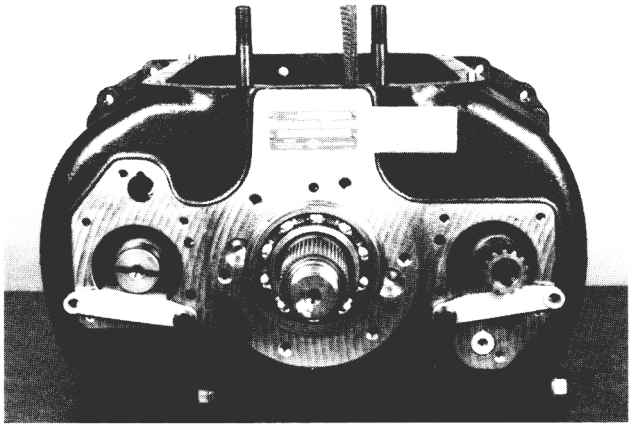

10. Slide the output bearing onto the shaft with a suitable driver. It is properly seated when the snap ring seats against the case.

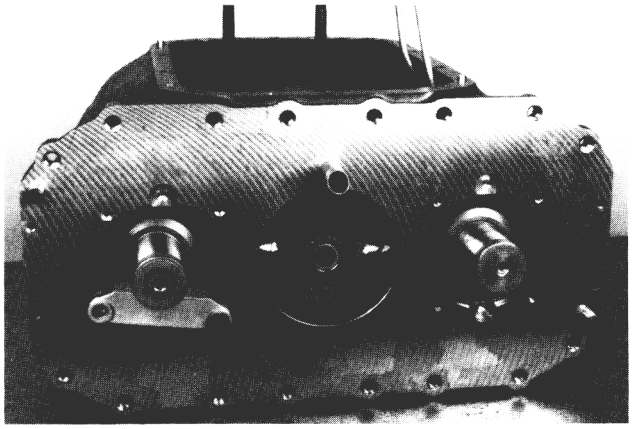

11. With the help of a lift hook, set the countershafts in time by matching the alignment marks.

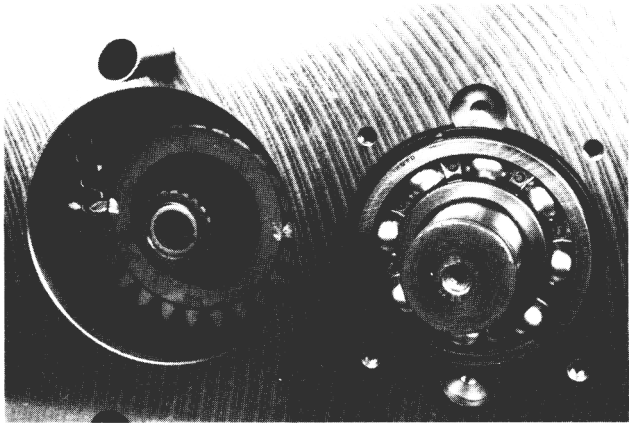

12. Install both the front and rear bearings on one of the countershafts.

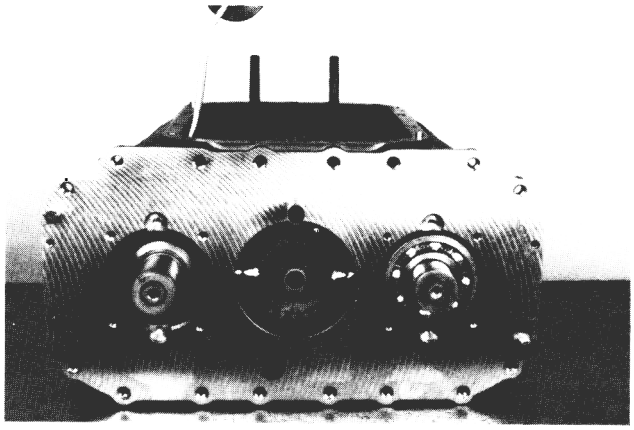

13. Repeat the procedure for the remaining countershaft.

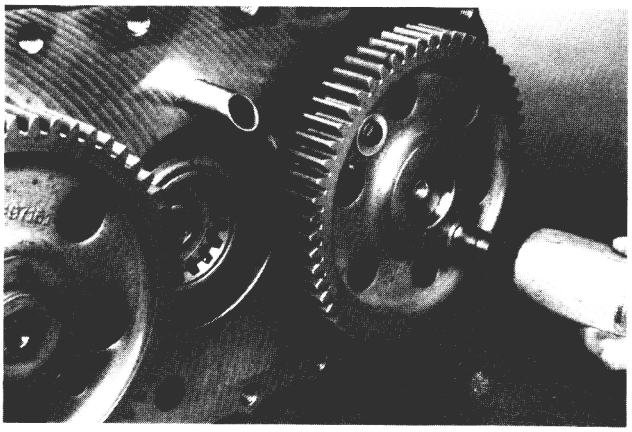

16. Using the alternating method, draw the gear onto the shaft, until it is seated behind the snap ring groove. Repeat this method for the other gear.

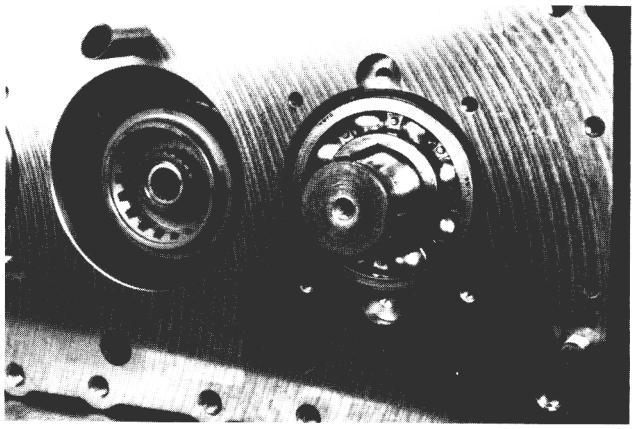

14. Next install the countershaft drive gear keys.

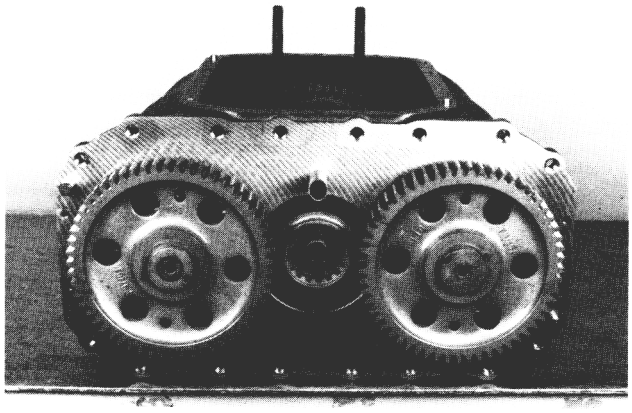

17. Once the gears are seated, install the snap rings and the sixth-seventh clutch collar.

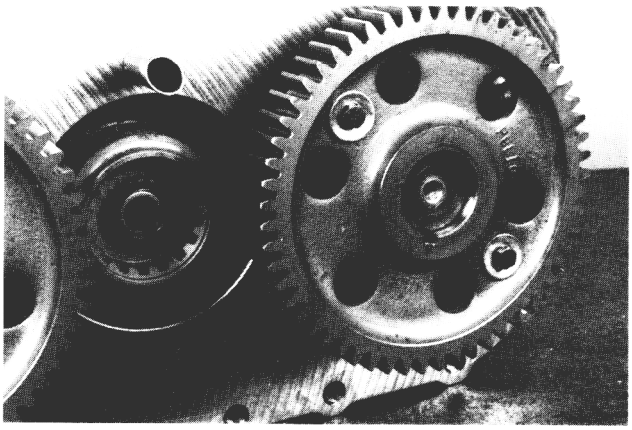

15. Slide the gear onto the shaft. Gather two of the 54103 (.375-1 6 x 3.00) grade eight bolts used for securing the clutch housing to the case, Place these in the two bolt holes in the gear, and thread them into the tapped installation holes provided in the case.

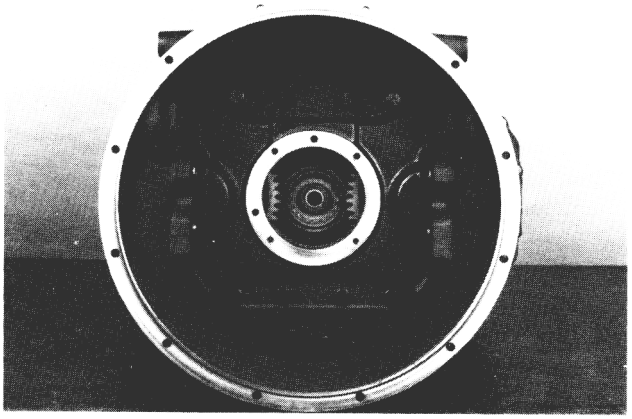

18. Apply a light coat of Loctite 51 5 to the clutch housing. Attach the housing to the case and secure it with capscrews. Torque them to 150-180 ft. lbs.

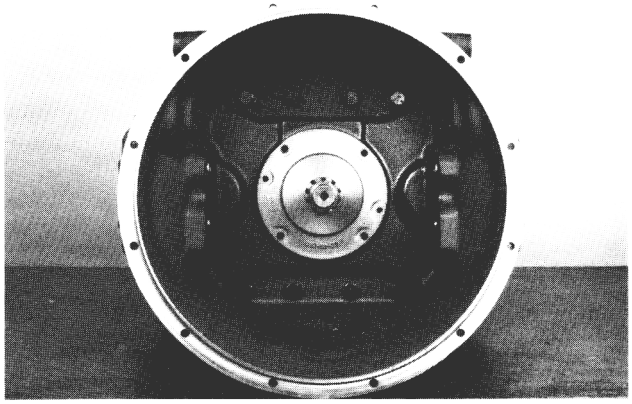

19. **Pre-lube the pocket bearing with Moly #2 before installing the input shaft.**

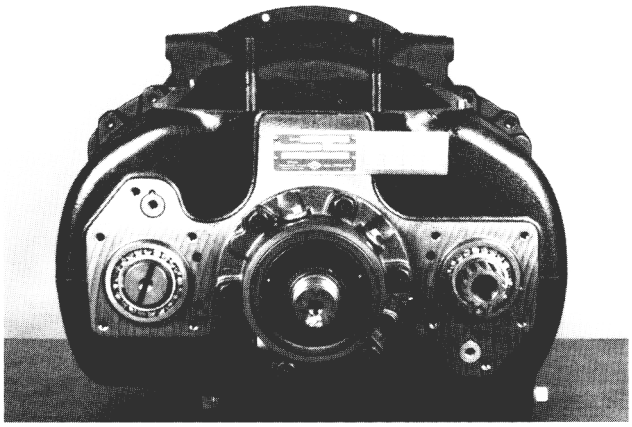

22. **The output bearing cap and gasket may be assembled to the case. Torque the capscrews to 78-98 ft. lbs.**

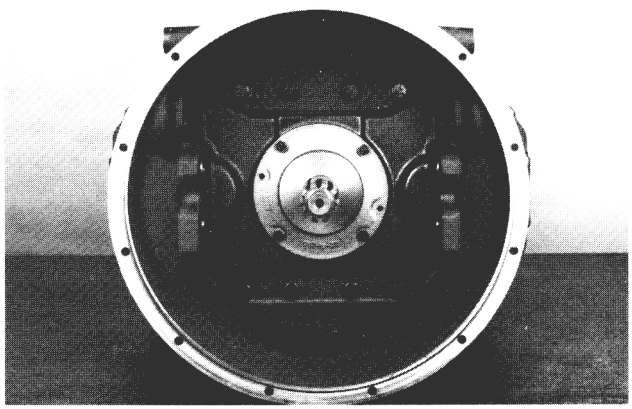

20. **Place the input bearing cap and gasket over the input shaft. Be careful to align it with the clutch housing oil hole. Torque the capscrews to 34-41 ft. lbs.**

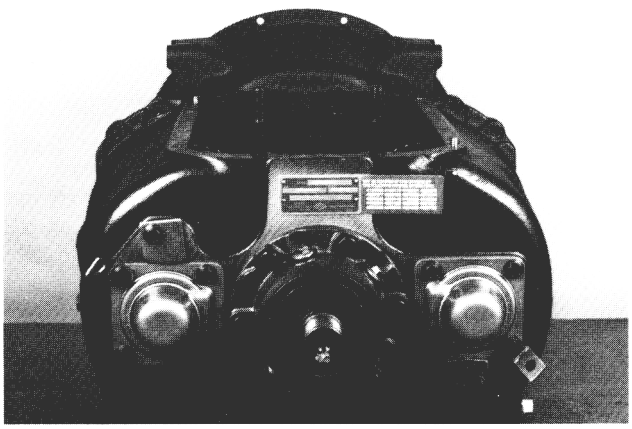

23. Place the countershaft bearing caps on the case and secure them with capscrews. Torque to 34-41 ft. lbs.

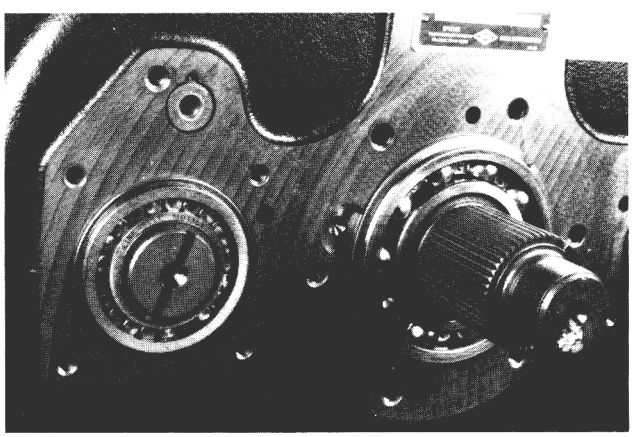

21. Install the upper reverse idler shaft. It is difficult to align the gear with the case hole unless the input shaft is in the unit. It is also necessary to lift up on the mainshaft reverse gear to obtain proper alignment.

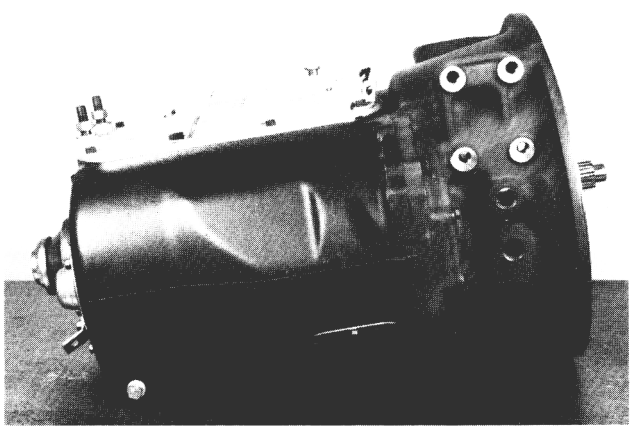

24. Bench shift the transmission to make sure everything is working properly. Then install the shifter housing and secure it with capscrews. Torque to 34-41 ft. lbs.

Important Procedure

When locating and correcting unit power or auxiliary transmission troubles, a systematic procedure should be followed.

Road test whenever possible. Mechanics usually get second or third hand reports of trouble experienced with the unit. These reports do not always accurately describe the actual conditions. Sometimes symptoms seem to indicate trouble in the transmission. The trouble actually may be caused by the axle, propeller shaft, universal joint, engine or clutch. This is especially true of complaints on noise. Therefore, before removing transmission or related components to locate trouble, always road test to check the possibility that trouble may exist in other closely associated units. If the mechanic can drive, road testing will be more effective; however, just riding with the driver can be very informative.

Check Functioning Prior to Disassembly

If remote controls are used, a careful check of the remote and connecting linkage to the transmission must be made. The remote unit must be in good working order if the transmission is expected to shift satisfactorily.

Many times the answer to the trouble is apparent when the unit is inspected prior to disassembly, but this evidence is often lost when the parts are separated. If possible, check the unit prior to disassembly. Bear in mind that a careful inspection of the unit should be made as each disassembly step is performed.

Inspect Thoroughly During Disassembly

It is poor practice to disassemble a unit or complete transmission as quickly as possible without bothering to examine the parts as they come down. It happens many times that a mechanic has completely disassembled a unit and failed to find the cause of the trouble because he did not bother to examine the parts as they came apart. After the transmission is disassembled, check the lubricant for foreign particles which often reveal sources of trouble that are overlooked during the disassembly.

Repair or Replace Worn Parts

Many times the parts or critical adjustments that have caused the trouble are not replaced or corrected because the mechanic will only inspect and replace parts that have failed completely. All pieces should be accurately examined because the broken parts are often just the result and not the cause of the trouble. All parts that are broken or worn and no longer meet specifications should be replaced. On large units, like a transmission, it is suggested that a mechanic replace parts that are worn to the extent that they do not have a long service life remaining. This avoids another teardown on the unit in the near future. It is also good practice, at this time, to make the changes or modifications recommended to bring the transmission up to date and increase the service life of the unit.

Noisy Operation

Noise is usually very elusive and generally not the fault of the transmission. Therefore, mechanics should road test to determine if the driver's complaint of noise is actually in the transmission.

In numerous instances, drivers have insisted that the noise was in the transmission. However, investigations revealed the noise to be caused by one of the following conditions:

(a) Fan out of balance or blades were bent.

(b) Defective vibration dampers.

(c) Crankshafts out of balance.

(d) Flywheels out of balance.

(e) Flywheel mounting bolts.

(f) Engine rough at idle producing rattle in gear train.

(g) Clutch assembly out of balance.

(h) Engine mounts loose or broken.

(i) Power take-off engaged.

(j) Universal joints worn out.

(k) Propeller shafts out of balance.

(l) Universal joint angles out of plane or at excessive angle.

(m) Center bearings in drive line dry, not mounted properly, etc.

(n) Wheels out of balance.

(0) Tire treads humming or vibrating at certain speeds.

(p) Air leaks on suction side of induction system, especially with turbo-chargers.

Mechanics should try to locate and eliminate noise by means other than transmission removal, or overhaul. However, if the noise appears to be in the transmission try to break it down into the following classifications. If possible, determine what position the gear shift lever is in when the noise occurs. If the noise is evident in only one gear position, the cause of the noise is generally traceable to the gears in operation.

(a) *Growling, humming or grinding.* These noises are caused by worn, chipped, rough or cracked gears. As gears continue to wear, the grinding noise will be noticeable, particularly in the gear position that throws the greatest load on the worn gear.

(b) *Hissing, thumping or bumping.* Hissing noises can be caused by bad bearings. As bearings wear and retainers start to break up, the noise could change to a thumping or bumping.

(c) *Metallic rattles* within the transmission usually result from a variety of conditions. Engine torsional vibrations are transmitted to the transmission through the clutch. In heavy duty equipment, clutch discs with vibration dampers are not used, so a rattle, particularly in neutral, is common with diesel equipment. In general, engine speeds should be 600 RPM or above to eliminate objectionable rattles and vibration during the idle. A defective or faulty injector would cause a rough or lower idle speed and a rattle in the transmission. Rattles could also be caused by excessive backlash in P.T.O. unit mounting.

(d) *Improper lubricants* or lack of lubricant can produce noises. Transmissions with low oil levels sometimes run hotter than normal, as there is insufficient lubricant to cool and cover the gears.

Improved highways permit sustained high speeds. The fact that engines and entire powertrains can now cruise at a higher RPM can introduce vibration frequencies that were not critical in the past. At slower speeds these items would get by or only pass through critical period while accelerating or decelerating through the gears.

In the past, drive line vibrations resulting from bent tubes, joints out of phase or alignment, bad angles to short couples, or clutches out of balance, were fairly obvious. These items become critical in vehicles running at sustained high speeds.

Critical vibrations associated with higher speeds are not the old thumping or bumping type but are high frequency vibrations which sting or tingle the soles of your feet, tickle the ends of your fingers, etc. This type of vibration will cause gear seizures, broken synchronizer pins, bearing failure due to retainer rivet failures, promote brinelling, fretting corrosion, etc.

(e) *Gear whine* is usually caused by lack of backlash between mating gears. Improper shimming of P.T.O. units is the big offender here.

Noise in Neutral

Possible Causes:

(a) Misalignment of transmission.

(b) Worn flywheel pilot bearing.

(c) Worn or scored countershaft bearings.

(d) Worn or rough reverse idler gear.

(e) Sprung or worn countershaft.

(f) Excessive backlash in gears.

(g) Worn mainshaft pilot bearing.

(h) Scuffed gear tooth contact surface.

(i) Insufficient lubrication.

(j) Use of incorrect grade of lubricant.

(k) Engine torsional.

Noise in Gear

Possible Causes:

(a) Worn or rough mainshaft rear bearing.

(b) Rough, chipped, or tapered sliding gear teeth.

(c) Noisy speedometer gears.

(d) Excessive end play of mainshaft gears.

(e) Refer to conditions listed under "Noise in Neutral".

Oil Leaks

Possible Causes:

(a) Oil level too high.

(b) Wrong lubricant in unit.

(c) Non-shielded bearing used as front or rear bearing cap. (Where applicable).

(d) Seals (if used) defective or omitted from bearing cap, wrong type seal used, etc.

(e) Transmission breather omitted, plugged internally, etc.

(f) Capscrews loose, omitted or missing from remote control, shifter housing, bearing caps, P.T.O. or covers, etc.

(g) Oil drain-back openings in bearing caps or case plugged with varnish, dirt, covered with gasket material, etc.

(h) Broken gaskets, gaskets shifted or squeezed out of position, pieces still under bearing caps, clutch housing, P.T.O. and covers, etc.

(i) Cracks or holes in castings.

(j) Drain plug loose.

(k) Also possibility that oil leakage could be from engine.

(l) Speedometer adaptor or connections.

Walking or Jumping Out of Gear

If the units are walking out of gear it could be caused by:

(a) Interference or resistance in the shift mechanism preventing full engagement of the sliding clutch gear, or

(b) If the gear has been shifted completely into position some other malfunction which could move the gear or the shift itself out of its proper location.

If remote controls are used, the mechanic must satisfy himself that the remote units are satisfactory and that the transmission is actually at fault. One other point that should be noted is whether the unit walks out of gear under drive (while pulling a load) or on a coast load. Also, does the gear hop occur on smooth or rough roads. A number of items that would prevent full engagement of gears are:

(a) Improperly positioned forward remote control which limits full travel forward and backward from the remote neutral position.

(b) Improper length shift rods or linkage that limits travel of forward remote from neutral position.

(c) Loose bell cranks, sloppy ball socket joints.

(d) Shift rods, cables, etc., too spongy, flexible, or not secured properly at both ends.

(e) Worn or loose engine mounts if forward unit is mounted to frame.

(f) Forward remote mount too flimsy, loose on frame, etc.

(g) Setscrews loose at remote control joints or on shift forks inside remote or even inside transmission unit.

(h) Shift fork pads or groove in sliding gear or collar worn excessively.

(i) Worn taper on gear clutch teeth.

(j) Transmission and engine out of alignment either vertically or horizontally:

A few items which could move the gear or shaft out of proper position, particularly on rough roads are:

(a) Use of heavy shift lever extension.

(b) Shift rod poppet springs broken.

(c) Shift rod poppet notches worn.

(d) Shift rod bent or sprung out of line.

(e) Shift fork pads not square with shift rod bore

(f) Excessive end-play in drive gear, mainshaft or countershaft, caused by worn bearings, retainers, etc.

(g) Thrust washers worn excessively or missing.

(h) Timing error on countershaft gears.

Hard Shifting

An improperly operating clutch will interfere with the proper shifting of gears in any transmission. It is important that the hydraulic, air or similar release mechanism (if used), also be used in proper working order. If the mechanic is sure that a full and complete clutch release is being made, the following could be a few of the possible causes for hard shifting complaints:

(a) No lubricant in remote control units. Forward remote is isolated and is often overlooked. However, many remote controls used on transmissions and auxiliaries require separate lubrication.

(b) No lubricant in (or grease fittings on) U-joints or swivels of remote controls.

(c) Lack of lubricant or wrong lubricant used, causing backup of sticking varnish and sludge deposits on splines of shaft and gears.

(d) Badly worn or bent shift rods.

(e) Improper adjustment on shifter linkage.

(f) Sliding clutch gears tight on splines of shaft.

(g) Clutch teeth burred over, chipped or badly mutilated because of improper shifting.

(h) Binding or interference of shift lever with other objects or rods inside the cab or near the remote control island.

(i) Driver not familiar with proper shifting procedure for the transmission. Also includes proper shifting if used with 2-speed axle, auxiliary, etc.

(j) Clutch or drive gear pilot bearing seized, rough, or dragging.

(k) Clutch brake engaging too soon when clutch pedal is depressed.

(l) Wrong lubricant, especially if E.P. type lubricant is added.

(m) Free running gears, seized or galled on either the thrust face or diameters.

(n) Worn or elongated shift rod poppet holes.

(o) Timing error on countershaft gears.

Sticking in Gear

(a) Clutch not releasing. Also check remote units such as hydraulic or air assist, etc. Note: On some units employing a full air control for clutch release, air pressure of approximately 60 lbs. or more must be secured before clutch can be released. Do not leave these vehicles parked in gear.

(b) Sliding clutch gears tight on splines.

(c) Chips wedged between or under splines of shaft and gear.

(d) Improper adjustment, excessive wear or lost motion in shifter linkage.

(e) Clutch brake set too high on clutch pedal, locking gears behind hopping guard

Bearing Failures

The service life of most transmissions, either main or auxiliaries, is governed by the life of the bearings. The majority of bearing failures can be attributed to vibration and dirt. Some of the more prominent reasons for unit removal with bearing failures are:

(a) Worn out because of excess dirt.

(b) Fatigue of raceways or balls.

(c) Wrong type or grade of lubricant.

(d) Lack of lubricant.

(e) Vibrations - breakup of retainer & brinelling of races, fretting corrosion.

(f) Bearings tied up because of chips in bearings.

(g) Bearings set-up too tight or loose.

(h) Improper assembly – brinelling bearing.

(i) Improper fit of shafts or bore.

(j) Acid etch of bearings because of water in lube.

(k) Overloading of vehicle. Overload from engine or engine too large for transmission.

Dirt

More than 90 percent of all bearing failures are caused by dirt which is always abrasive.

Dirt may enter the bearings during assembly of the units or be carried into the bearing by the lubricant while in service. Dirt may also enter through seals, breather, or even dirty containers used for addition or change of lubricant.

Softer materials such as dirt, dust, etc., usually form an abrasive paste or lapping compound within the bearings themselves, since the unit pressure between the balls and raceways make a perfect pulverizer. The rolling motion tends to entrap and hold the abrasives. As the balls and raceways wear, the bearings become noisy. The lapping action tends to increase rapidly as the fine steel from the balls and rollway adds to the lapping material.

Hard coarse material such as chips, etc., may enter the bearings during assembly from hammers, drifts, power chisels, etc., or be manufactured within the unit during service from raking teeth, etc. These chips produce small indentation in balls and races. Jamming of these hard particles between balls and races may cause the inner face to turn on the shaft, or the outer race to turn in the housing.

Fatigue

All bearings are subject to fatigue and must be replaced eventually. Your own operating experience will dictate mileage replacement of bearings showing only normal wear.

Corrosion

Water, acid and corrosive materials formed by deterioration of lubricant, will produce a reddish-brown coating and small etched holes over outer and exposed surfaces of the race. Corrosive oxides also act as a lapping agent.

Brinelling is caused by improper assembly or removal - usually hammering with off-center blows. Use drivers, preferably under an arbor press, or pullers for this type of work.

Shaft Fits

Excessive looseness under load is very objectionable because it produces a creeping or slipping of the inner ring on the rotating shaft. This causes the surface metal of the shafts to scrub or wear off.

Bearing fits on rotating shafts are usually specified as tight. When play or looseness, even .001 ", exists between the bearing and the shaft, there is a very powerful force which rotates the inner race on the shaft. This force is caused by the looseness or lost motion between the parts and disappears when no looseness exists.

Removal of Bearings

It is far more difficult to remove bearings from a shaft than to put them on. In most cases it is necessary to remove the bearing by pulling on the outer-race which can damage the balls or races. Since such damage is seldom visible, it does not become known until after complete reassembly. It is good preventative maintenance to replace most ball bearings during the overhaul period. If a bearing is not going to be replaced, avoid removal during low mileage rebuilds.

Interchangeability

All ball bearings (whether manufactured here or abroad) are interchangeable in regard to: standard dimensions, tolerances, and fits. However, for a given shaft size there are standard bearings for light, medium, and heavy-duty service.

Numbers and symbols stamped on inner and outer races of bearings designate size and type.

Numbering systems of different bearing manufacturers, however, have not been standardized. Consult interchangeable tables and use proper bearings for replacement parts.

Clutch Troubleshooting

Faulty clutch operation interferes with proper shifting of gears in any transmission. For complete information on Spicer Heavy Duty Clutches, refer to Bulletins No. 1308 and 1319. If a clutch other than a Spicer is used with this transmission, refer to the manufacturer's service manual for correct adjustment, maintenance, etc. The two following paragraphs describe the most common problems encountered with Spicer clutches.

(a) If the clutch slips or does not engage properly, first check the internal clutch adjustment. If adjustment does not remedy the situation, check for weak pressure springs, no free pedal, or worn or oily clutch facings and binding release mechanism.

(b) If the clutch drags or does not release properly, check the internal clutch adjustment. Some other causes for clutch drag are: intermediate plate sticking on drive pins or drive lugs; pressure plate not retracting; driven disc distored or warped; splines worn on main drive gear of transmission; clutch release bearing damaged, or bushing in release sleeve dragging on transmission drive gear.

NOTE

See "Transmission Installation" section of clutch manual for information on making the internal clutch adjustment to Spicer Heavy Duty Clutches.

SECTION 09: PROPELLER SHAFT

CONTENTS

1. PROPELLER SHAFT 09-2

1.1 Description 09-2

2. REMOVAL, DISASSEMBLY, REASSEMBLY AND INSTALLATION 09-2

3. CLEANING, INSPECTION AND LUBRICATION.....09-2

3.1 Cleaning and Inspection 09-2

3.2 Lubrication.....09-2

4. EXPLANATION OF COMMON DAMAGES.....09-3

5. TROUBLESHOOTING.....09-3

6. SPECIFICATIONS.....09-4

LIST OF ILLUSTRATIONS

FIG. 1: PROPELLER SHAFT ASSEMBLY.....09-3

1. PROPELLER SHAFT

1.1 Description

The propeller shaft transmits power from the transmission to the differential (Fig.1). According to the transmission model with series 60 engine, two lengths of propeller shafts are available. Refer to paragraph "6. Specifications" at the end of this section for details. Both propeller shafts are "Dana 1810" type and each shaft is tubular. They are provided with two heavy-duty universal joints (Fig. 1).

The propeller shaft has a full round end yoke at each end. The tube yoke is connected to the differential by a full round end yoke with four needle bearings.

The other extremity (slip yoke assembly) is connected to the transmission by a half round end yoke with two needle bearings.

Furthermore, a slip joint on the propeller shaft compensates for variations in distance between the transmission (manual or automatic) and the differential, or between the output retarder (optional on the automatic transmission) and differential.

These variations are brought about by the rise and fall of the drive axle as the vehicle passes over uneven surfaces. The slip joint also eases removal of the transmission or the drive axle.

2. REMOVAL, DISASSEMBLY, REASSEMBLY AND INSTALLATION

Refer to the "Spicer Universal Joint and driveshafts" annexed to the end of this section, under headings Heavy Duty - Removal, Disassembly, Reassembly and Installation.

Where applicable:

- Remove or install propeller shaft safety guard.
- Screw bolts to the specified torque (Fig. 1).

Note: ***Disregard the procedure on lock straps mentioned in the Spicer Universal Joints and Driveshafts Manual.***

3. CLEANING, INSPECTION AND LUBRICATION

3.1 Cleaning and Inspection

Thoroughly clean grease from bearings, journal, lubricating grease fittings and other parts. Needle bearing assemblies may be soaked in a cleaning solution to soften hard grease particles. It is extremely important that bearing assemblies be absolutely clean and blown out with compressed air, since small particles of dirt or grit can cause rapid bearing wear. Do not attempt to disassemble needle bearings.

Bearing journal areas should be inspected for roughness or grooving. If light honing does not remove roughness, the entire bearing assembly should be replaced. Excessive wear of the needle bearing is indicated if the needles drop out of the retainer, or if marks are present on the journal bearing surface. In such case, replace bearing assembly. Finally, inspect yokes for cracks, wear or distortion.

Note: *Repair kits are available for overhaul of the propeller shaft assembly. Refer to the paragraph "6. Specifications" of this section.*

3.2 Lubrication

Lubricate propeller shaft universal joints and slip yoke periodically, every 6,250 miles (10 000 km) or twice a year, whichever comes first. Apply grease gun pressure to the lube fitting. Use a good quality lithium-base grease such as: NLGI No.2 (suitable for most temperatures) or NLGI No.1 (suitable for extremely low temperatures). Refer to "Spicer Universal Joints and Driveshafts, Service Manual", under heading, "Inspection and Lubrication". See lubrication procedures for U-joints and lubrication for slip splines.

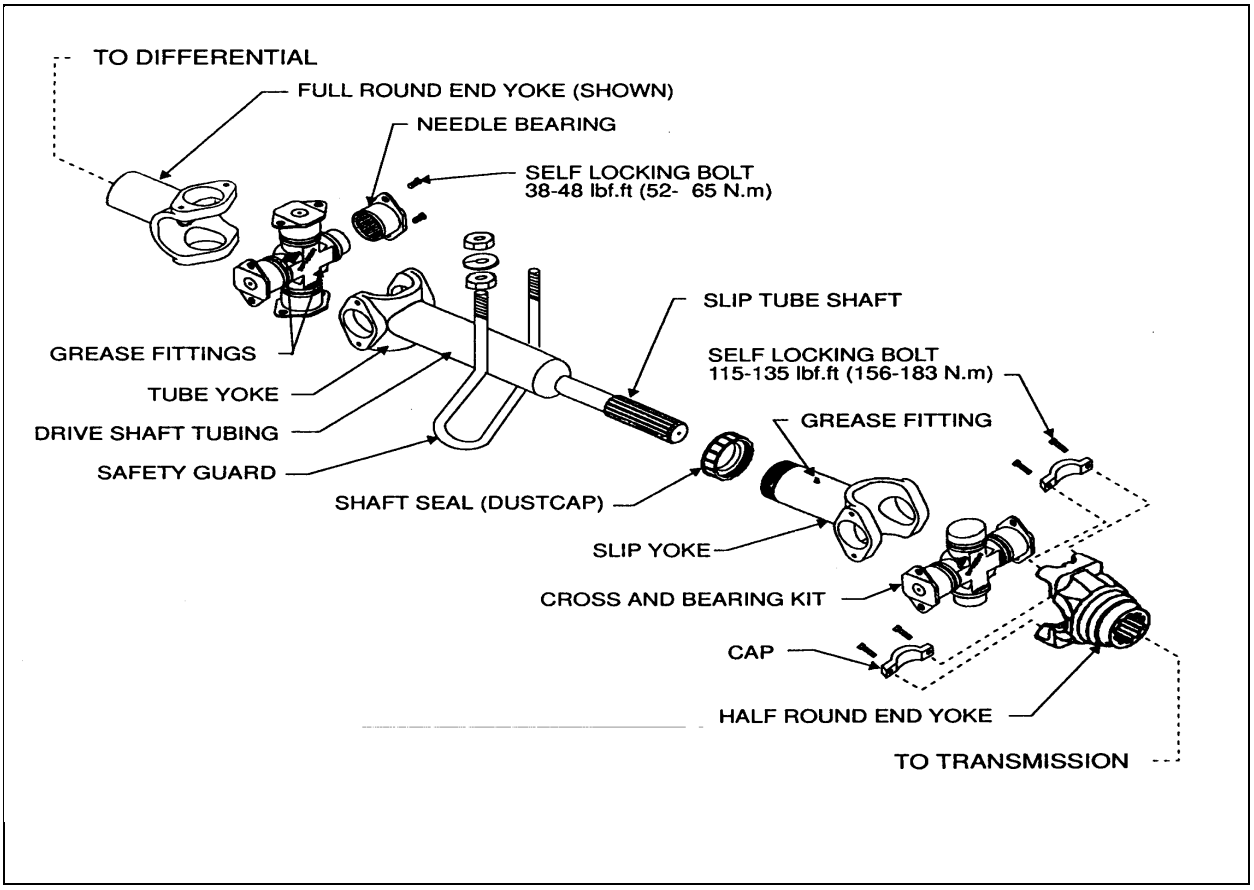

FIGURE 1: PROPELLER SHAFT ASSEMBLY 09001

4. EXPLANATION OF COMMON DAMAGES

1. Cracks: Stress lines due to metal fatigue. Severe and numerous cracks will weaken the metal until it breaks.

2. Galling: Scraping off of metal or metal displacement due to friction between surfaces. This is commonly found on trunnion ends.

3. Spalling (surface fatigue): Breaking off of chips, scales, or flakes of metal due to fatigue rather than wear. It is usually found on splines and U-joint bearings.

4. Pitting: Small pits or craters in metal surfaces due to corrosion. If excessive, pitting can lead to surface wear and eventual failure.

5. Brinelling: Surface wear failure due to the wearing of grooves in metal. It is often caused by improper installation procedures. Do not confuse the polishing of a surface (false brinelling), where no structural damage occurs, with actual brinelling.

6. Structural Overloading: Failure caused by a load greater than the component can stand. A structural overload may cause propeller shaft tubing to twist under strain or it may cause cracks or breaks in U-joints and spline plugs.

5. TROUBLESHOOTING

Refer to "Spicer Universal Joints and Driveshafts, Service Manual". See heading "Troubleshooting".

6. SPECIFICATIONS

PROPELLER SHAFT

For H3 Vehicles Equipped with a 6-Speed Manual Transmission

Make ..... Hayes-Dana Inc.
Series 1810
Supplier number 819325-2200
Prevost number 080072

For H3 Vehicles Equipped with an Automatic World Transmission or a 7-Speed Manual Transmission

Make ..... Hayes-Dana Inc.
Series 1810
Supplier number 819325-1900
Prevost number 080068

Repair kits

Make ..... Hayes-Dana Inc
U-joint kit (tube yoke), Supplier number 5-281X
U-joint kit (tube yoke), Prevost number 580043
U-joint kit (slip yoke), Supplier number 5-510X
U-joint kit (slip yoke), Prevost number 580062
Cap and bolt kit, bolt torque 115-135 lbf•ft (156-183 N•m), Supplier number 6.5-70-18X
Cap and bolt kit, bolt torque 115-135 lbf•ft (156-183 N•m), Prevost number 580063
Bolts kit, bolt torque 38-48 lbf•ft (52-65 N•m), Supplier number 6-73-209
Bolts kit, bolt torque 38-48 lbf•ft (52-65 N•m), Prevost number 580071

Half Round End Yoke

Make ..... Hayes-Dana Inc
(6-speed), Supplier number 6.5-4-3021-1
(6-speed), Prevost number 580072
Make ..... Dana-Spicer
(7-speed), Supplier number 6.5-4-3821-1
(7-speed), Prevost number 571690

Note: ***U-joint kits will come equipped with the serrated bolt and lock patch and will no longer contain a lock strap.***

SPICER® LIFE™ DRIVELINE COMPONENTS

COMPANION FLANGE (1)

(2 STYLES)

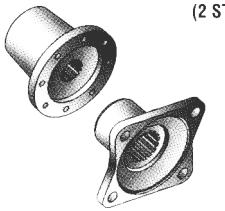

FLANGE YOKE (2)

(2 STYLES)

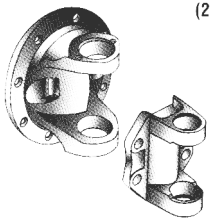

SLIP YOKE ASSEMBLY (3)

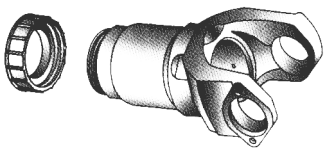

END YOKE (4)

(3 STYLES)

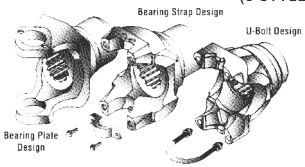

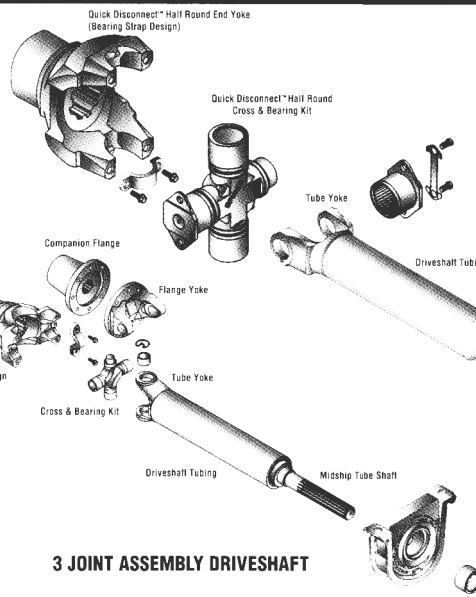

3 JOINT ASSEMBLY DRIVESHAFT

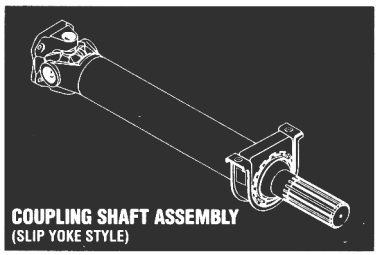

COUPLING SHAFT ASSEMBLY (SLIP YOKE STYLE)

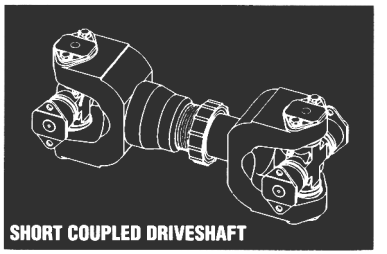

SHORT COUPLED DRIVESHAFT

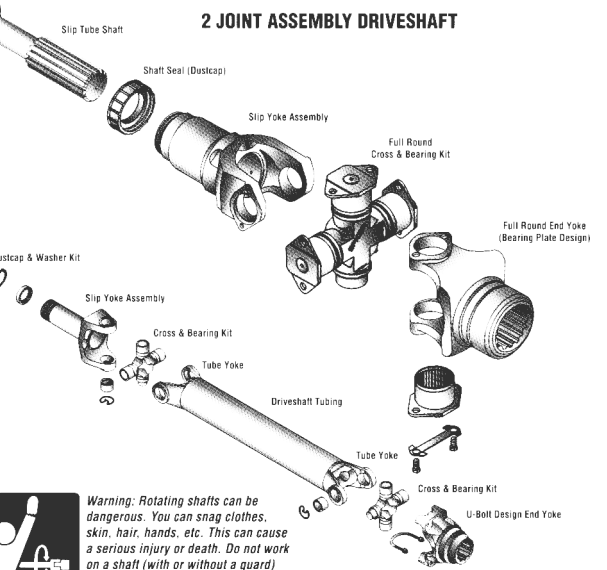

2 JOINT ASSEMBLY DRIVESHAFT

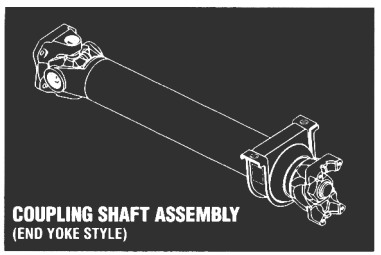

COUPLING SHAFT ASSEMBLY (END YOKE STYLE)



Warning: Rotating shafts can be dangerous. You can snag clothes, skin, hair, hands, etc. This can cause a serious injury or death. Do not work on a shaft (with or without a guard) when the engine is running.

1994 Dana Corporation Printed in U.S.A.

Dana Corporation
Spicer Universal Joint Division
P.O. Box 955
Toledo, Ohio 43697-0955

SPICER®

DANA

Bulletin J3211-2

TUBING (30 or 32)



TUBE SHAFT (40-42)

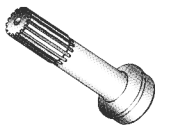

MIDSHIP TUBE SHAFT (53-57)

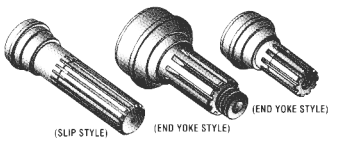

SERRATED BOLTS w/LOCK PATCH (73)



LOCK STRAP (98)



U-BOLT ASSEMBLY (94)

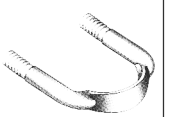

SOCKET YOKE (83)

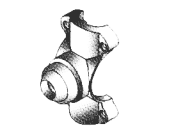

DUST CAP & WASHER KIT (VARIABLE PART NO.)

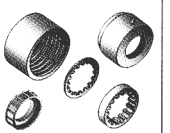

STRAP OR CAP & BOLT ASSEMBLY (70)

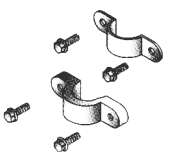

JOURNAL & BEARING KIT

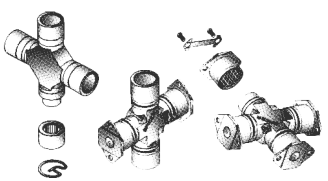

TUBE YOKE w/TUBE (27)

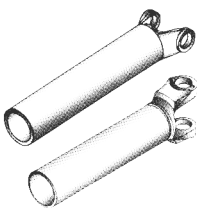

TUBE YOKE (28)

(2 STYLES)

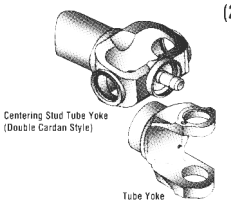

YOKE SHAFT (82)

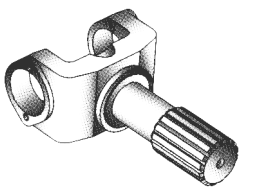

CENTER YOKE (26)

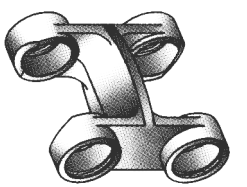

SHAFT SUPPORT BEARING ASSEMBLY

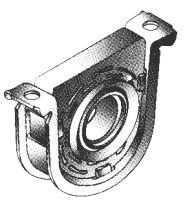

SPICER® LIFE™ DRIVELINE COMPONENTS

COMPANION FLANGE (1)

(2 STYLES)

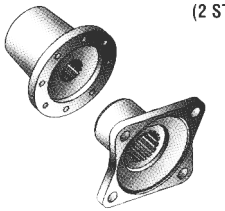

FLANGE YOKE (2)

(2 STYLES)

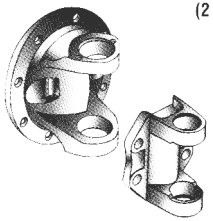

SLIP YOKE ASSEMBLY (3)

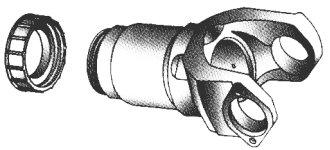

END YOKE (4)

(3 STYLES)

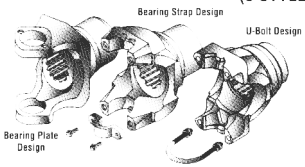

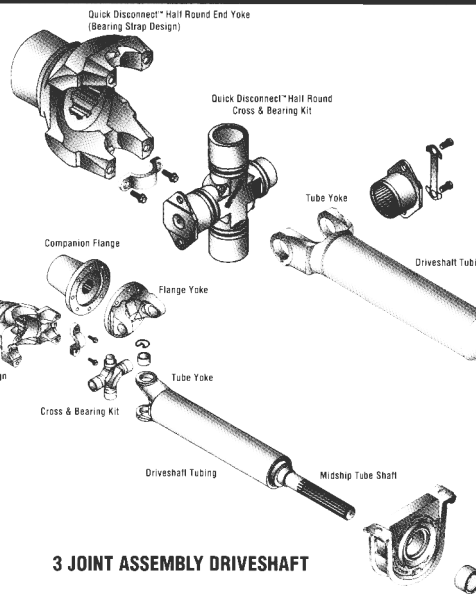

3 JOINT ASSEMBLY DRIVESHAFT

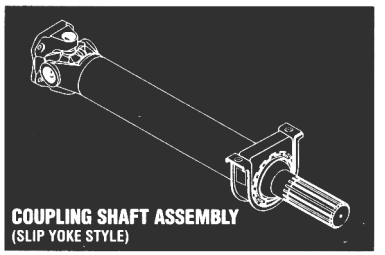

COUPLING SHAFT ASSEMBLY (SLIP YOKE STYLE)

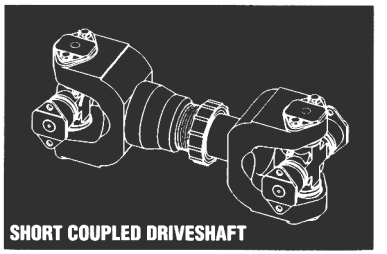

SHORT COUPLED DRIVESHAFT

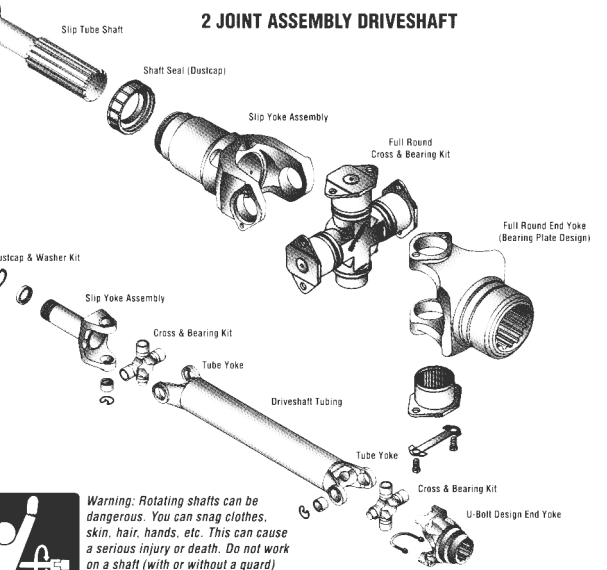

2 JOINT ASSEMBLY DRIVESHAFT

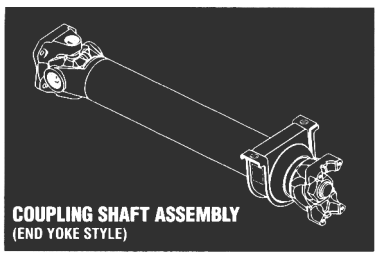

COUPLING SHAFT ASSEMBLY (END YOKE STYLE)



Warning: Rotating shafts can be dangerous. You can snag clothes, skin, hair, hands, etc. This can cause a serious injury or death. Do not work on a shaft (with or without a guard) when the engine is running.

1994 Dana Corporation Printed in U.S.A.

Dana Corporation
Spicer Universal Joint Division
P.O. Box 955
Toledo, Ohio 43697-0955

SPICER®

DANA

Bulletin J3211-2

TUBING (30 or 32)



TUBE SHAFT (40-42)

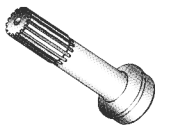

MIDSHIP TUBE SHAFT (53-57)

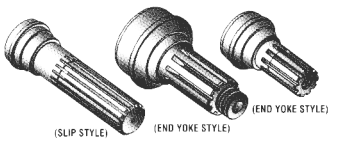

SERRATED BOLTS w/LOCK PATCH (73)



LOCK STRAP (98)



U-BOLT ASSEMBLY (94)

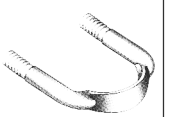

SOCKET YOKE (83)

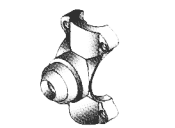

DUST CAP & WASHER KIT (VARIABLE PART NO.)

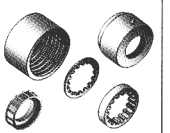

STRAP OR CAP & BOLT ASSEMBLY (70)

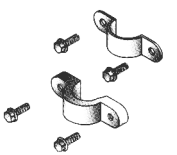

JOURNAL & BEARING KIT

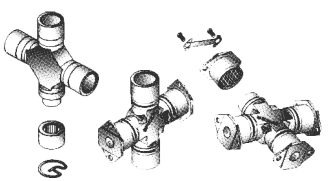

TUBE YOKE w/TUBE (27)

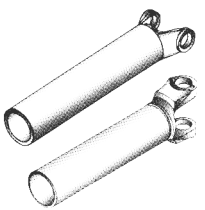

TUBE YOKE (28)

(2 STYLES)

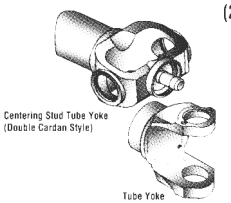

YOKE SHAFT (82)

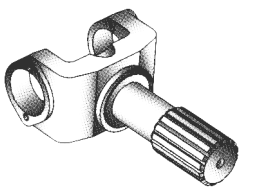

CENTER YOKE (26)

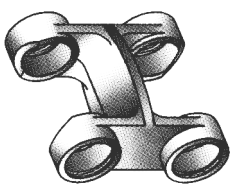

SHAFT SUPPORT BEARING ASSEMBLY

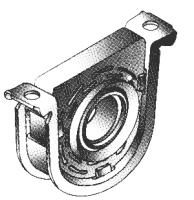

SPICER DRIVELINE COMPONENTS

TROUBLESHOOTING GUIDELINES

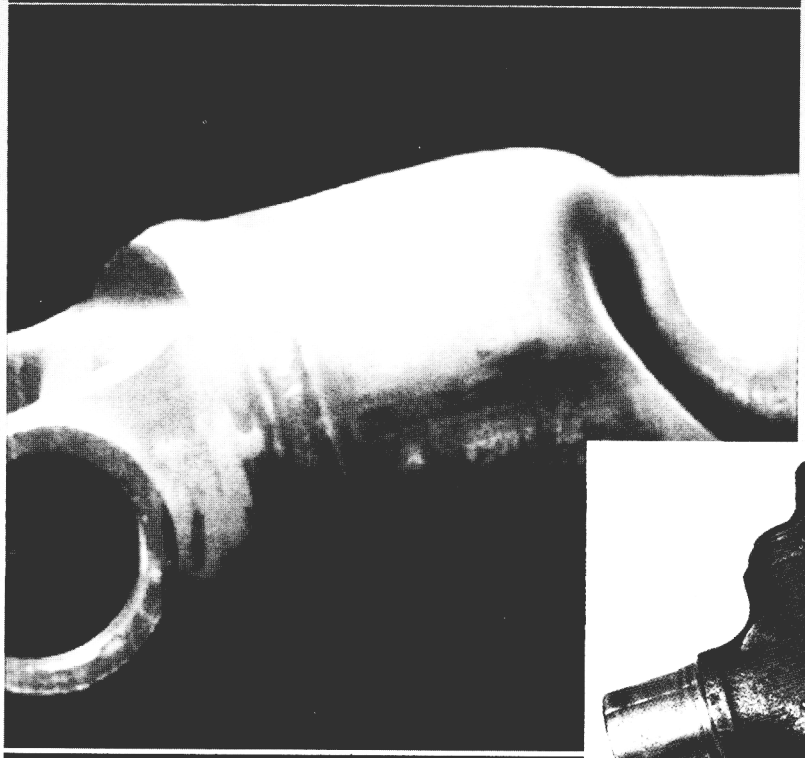

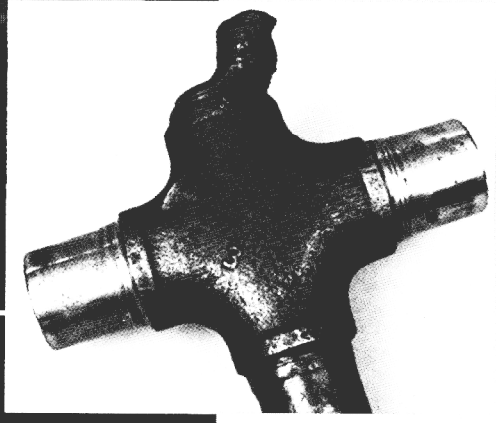

Causes and Solutions To Field Problems

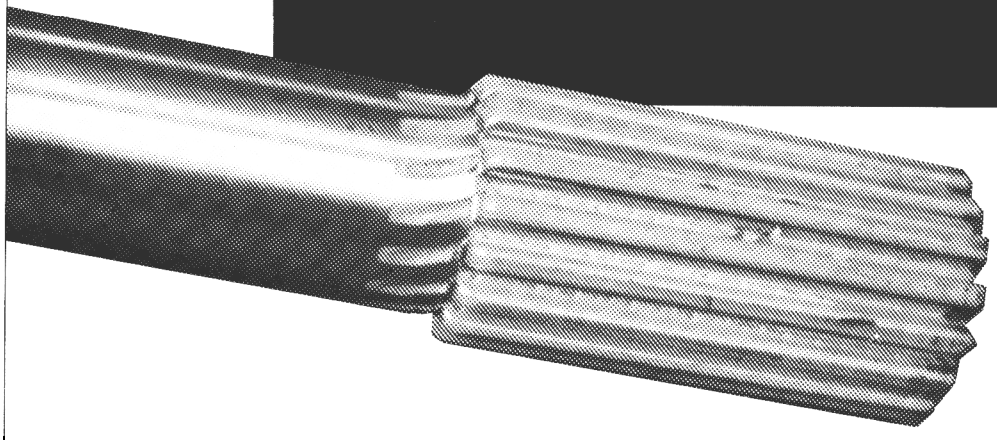

SPICER®

DANA

SAFETY PRECAUTIONS

GENERAL SAFETY INFORMATION

To prevent injury to yourself and/or damage to the equipment:

- Read carefully all owners manuals, service manuals, and/or other instructions.
- Always follow proper procedures and use proper tools and safety equipment.
- Be sure to receive proper training.
- Never work alone while under a vehicle or while repairing or maintaining equipment.
- Always use proper components in applications for which they are approved.
- Be sure to assemble components properly.
- Never use worn-out or damaged components.
- Always block any raised or moving device that may injure a person working on or under a vehicle.
- Never operate the controls of the power take-off or other driven equipment from any position that could result in getting caught in the moving machinery.



WARNING: ROTATING DRIVESHAFTS

- Rotating auxiliary driveshafts are dangerous. You can snag clothes, skin, hair, hands, etc. This can cause serious injury or death.
- Do not go under the vehicle when the engine is running.
- Do not work on or near an exposed shaft when engine is running.
- Shut off engine before working on power take-off or driven equipment.
- Exposed rotating driveshafts must be guarded.

WARNING: GUARDING AUXILIARY DRIVESHAFTS

We strongly recommend that a power take-off and a directly mounted pump be used to eliminate the auxiliary driveshaft whenever possible. If an auxiliary driveshaft is used and remains exposed after installation, it is the responsibility of the vehicle designer and PTO installer to install a guard.

WARNING: USING SET SCREWS

Auxiliary driveshafts may be installed with either recessed or protruding set screws. If you choose a square head set screw, you should be aware that it will protrude above the hub of the yoke and may be a point where clothes, skin, hair, hands, etc. could be snagged. A socket head set screw, which may not protrude above the hub of the yoke, does not permit the same amount of torquing as does a square head set screw. Also, a square head set screw, if used with a lock wire, will prevent loosening of the screw caused by vibration. Regardless of the choice made with respect to a set screw, an exposed rotating auxiliary driveshaft must be guarded.

A THIS SYMBOL WARNS OF POSSIBLE PERSONAL INJURY.

@ 1994 DANA COR^PORATION
Printed in USA.

INTRODUCTION

Universal joint failures, as a rule, are of a progressive nature, which, when they occur, generally accelerate rapidly resulting in a mass of melted trunnions and bearings.

Some recognizable signs of universal joint deterioration are:

1) Vibrations - Driver should report to maintenance.
2) U-joint Looseness - End play across bearings.
3) U-joint discoloration due to excessive heat build-up.
4) Inability to purge all four trunnion seals when relubing U-joint.

Items 2) thru 4) should be checked at re-lube cycle and if detected, reported to the maintenance supervisor for investigation.

Experience with universal joint failures has shown that a significant majority are related to lubricating film breakdown. This may be caused by a lack of lubricant, inadequate lube quality for the application, inadequate initial lubrication or failure to lubricate properly and often enough.

Failures which are not the result of lubrication film breakdown are associated with the installation, angles and speeds and manufacturing discrepancies.

Driveshaft failures through torque, fatigue and bending are associated with overload, excessively high U-joint angles and drive shaft lengths excessive for operating speeds.

The trouble shooting chart in this bulletin is intended to provide service people with an aid to enable them to associate complaints with some of the **probable causes** and **probable corrections.** Through normal vehicle maintenance and recognition of discrepancies, this may enable them to make necessary corrections to ward off a serious breakdown.

DRIVESHAFT TORQUE

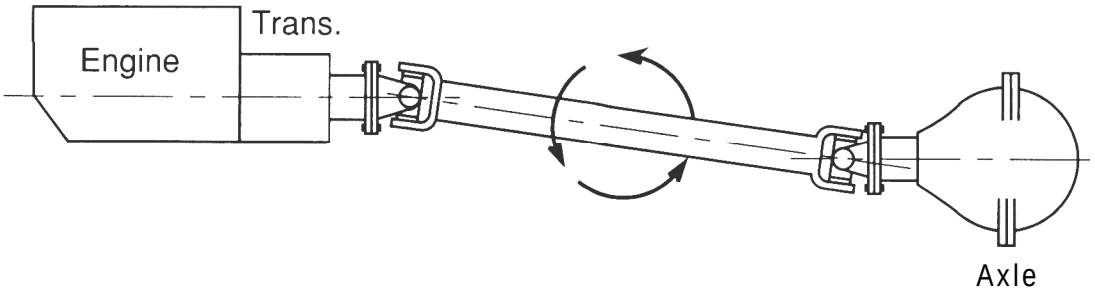

Twisted driveshaft tube?
Broken yoke shaft?
Broken journal cross?

Usually a result of torque overload– How much torque can be generated in your application?

Here is how to figure torque:

L.G.T. = N.E.T. x Trans L.G.R. x .85 (efficiency factor)

$$\text{D.L.T. (to Slip Wheels)} = \frac{W_R \times \text{C.O.F.} \times \text{R.R.}}{12 \times \text{A.R.}}$$

A.R. = Axle ratio
C.O.F. = Coefficient of friction (.7)
D.L.T. = Drive line torque
L.G.R. = Low gear ratio
L.G.T. = Low gear torque
N.E.T. = Net engine torque
R.R. = Tire loaded rolling radius
W_R = Weight on drive axle

Relate the lesser of above to Spicer U-joint ratings. If your torque exceeds the Spicer rating for the U-joint used in your application, switch to a size with a rating compatible to your calculation.

U-JOINT OPERATING ANGLES

U-joint operating angles are a primary source of problems contributing to:

- Vibrations
- Reduced U-joint life
- Problems with other drivetrain components that may include:
  - Transmission gear failures
  - Synchronizer failures
  - Differential problems
  - . Premature seal failures in axles, transmissions, pumps or blowers
  - Premature failure of gears, seals and shafts in Power Take-Offs

Every U-joint that operates at an angle will vibrate.

U-joint operating angles are probably the most common causes of driveline vibrations in vehicles that have been re-worked or in vehicles that have had auxiliary equipment installed.

To correct or eliminate these causes of driveline vibrations from your vehicle or new installation, you must determine the TRUE OPERATING ANGLE of each U-joint in your system.

The TRUE OPERATING ANGLE of a U-joint is a combination of the angle that occurs in the top view and the angle that occurs in the side view.

To determine the TRUE OPERATING ANGLE of a U-joint you must follow the instructions outlined in the following sections, numbered I and II, and calculate the TRUE OPERATING ANGLE using the information detailed in Section Ill.

I. TO DET E O NG A G ES IN TOP VIEW

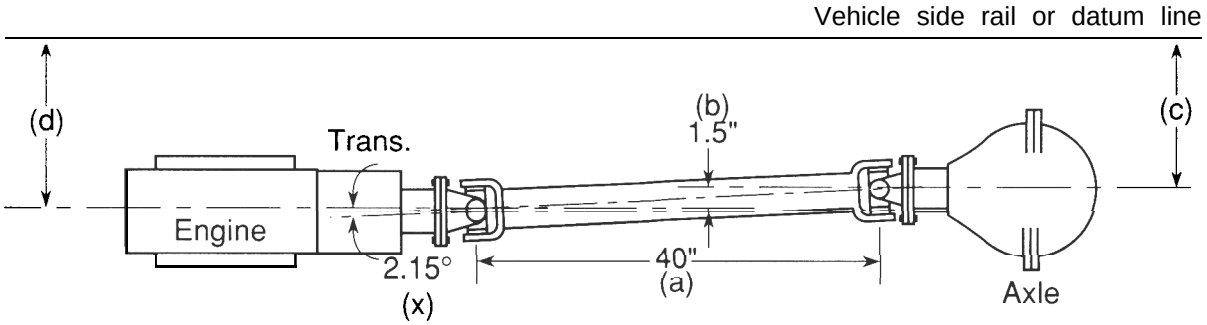

1. From side rail or convenient datum, measure offset dimensions c & d.
2. Calculate dimension b = d - c
3. Measure dimension a
4. Using dimensions a & b, determined through measurement, calculate U-joint angle x by using the chart provided.

Example:

Where a = 40.0”
b = 1.5”
X = 2.15° operating angle

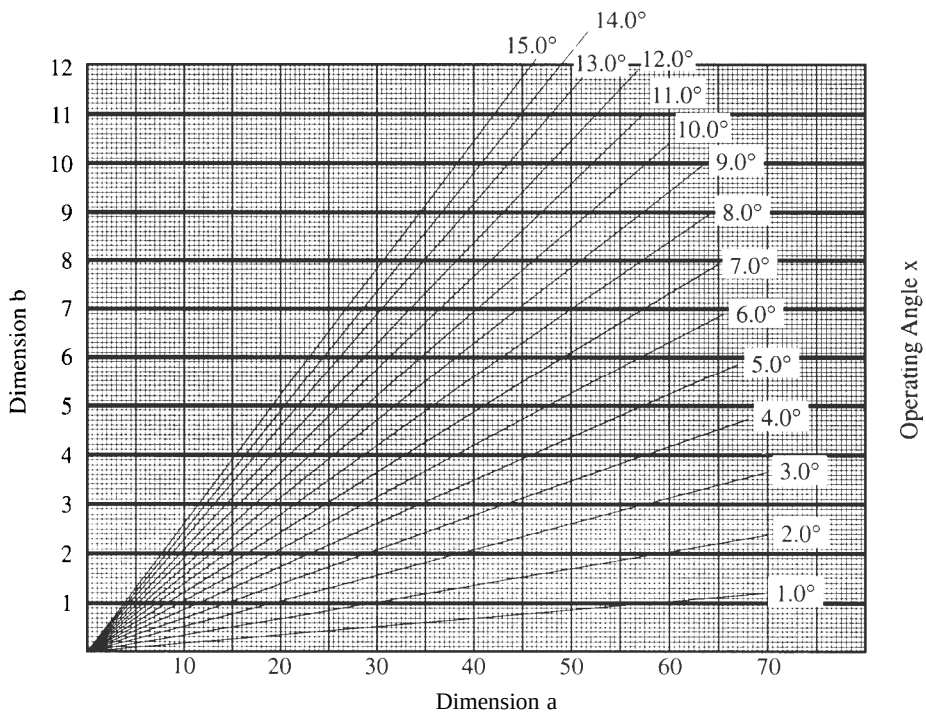

U-Joint Operating Angles

II. To determine operating angles in side view

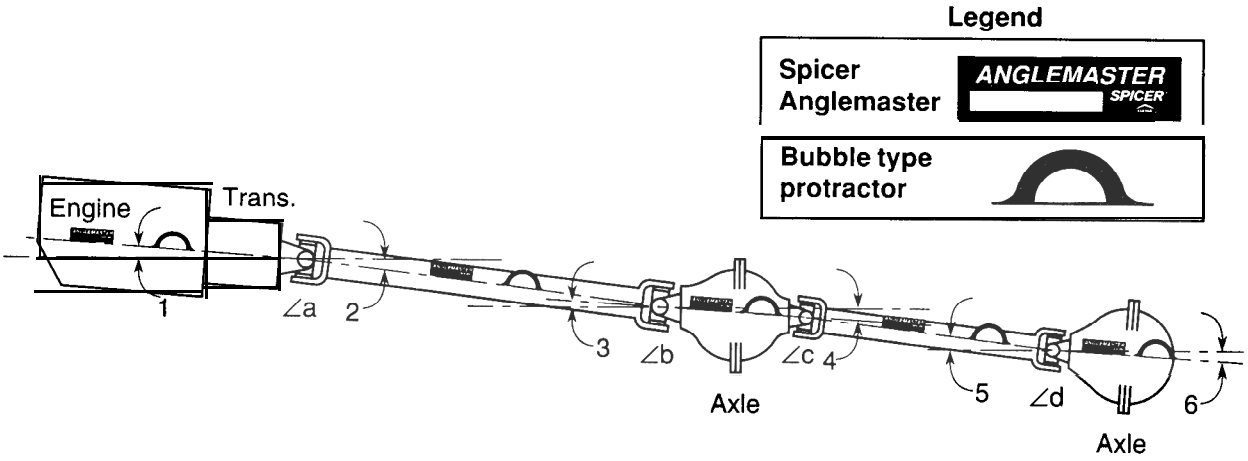

The most convenient way to determine U-joint angles in the side view is through use of a Spicer Anglemaster™ or a bubble type protractor. Procedure is as follows:

Step 1. Using an Anglemaster or a bubble protractor, record inclination angles of drivetrain components. Set Anglemaster or protractor on machined surfaces of engine, transmission, axle or on machined lugs of transmission output and axle input yokes.

Note: U-joint angles can change significantly in a loaded situation. Therefore, check vehicle loaded and unloaded to achieve the accepted angle cancellation. (See Step IV.)

Example:

Eng-Trans Output	4°30' Down (1)
Main Drive Shaft	7°00' Down (2)
Input 1st Rear Axle	4°00' Up (Input Shaft Nose Up) (3)
Output 1st Rear Axle	4°00' Down (4)
Inter-axle Shaft	7°00' Down (5)
Input 2nd Rear Axle	4°15' Up (Pinion Shaft Nose Up) (6)

Note: If inclination of driveshaft is opposite connecting component, add angles to obtain the U-joint operating angle.

∠ a = (2) - (1) = 7°00' - 4°30' = 2°30' (2.50°)
∠ b = (2) - (3) = 7°00' - 4°00' = 3°00' (3.00°)
∠ c = (5) - (4) = 7°00' - 4°00' = 3°00' (3.00°)
∠ d = (5) - (6) = 7°00' - 4°15' = 2°45' (2.75°)

III. Calculating the True U-Joint Operating Angle

The true U-joint operating angle is the sum of the U-joint angles in both the top view and the side view. The true U-joint operating angle is calculated in the following manner:

True operating angle = $\sqrt{x^{\circ 2} + a^{\circ 2}}$
Where x = 2.15° as determined by use of chart in Section I.

a = 2.5° as determined in Section II.

True operating angle = $\sqrt{2.15^2 + 2.5^2}$
= 3.297° or 3°18'

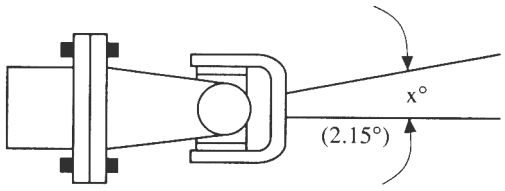

ANGLE IN TOP VIEW (FROM CHART)

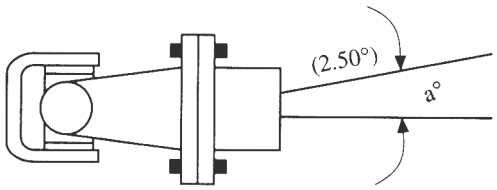

ANGLE IN SIDE VIEW (MEASURED)

IV. U-Joint Angle Cancellation

After calculating the TRUE OPERATING ANGLE of each U-joint in your driveline:

- Make sure the inboard yoke ears of each driveshaft are in line within each other.
- Compare the TRUE OPERATING ANGLE of each U-joint on each end of each shaft. They must be within one degree of each other or they will be a potential source of vibration.

If adjustments must be made to the system:

- Install shims between the axle housing and springs to rotate the axle input yoke to change operating angles.
- Change operating angle on torque arm type suspensions by lengthening or shortening torque arms.
- Raise, lower, or shift side to side a pump, blower or other piece of auxiliary equipment to change operating angles.

IMPORTANT TO REMEMBER: Keep the centerlines of two components that are connected by a driveshaft parallel in both the top and side views, so the operating angles will ALWAYS be equal.

V. Maximum True Operating Angles*

For Two Joint Shafts with Equal or Intersecting Angles

When you settle on a true operating angle that is correct, make sure it doesn't exceed the angles shown in this chart for the driveshaft RPM.

R.P.M. is the main factor in determining maximum allowable operating angles. As a guide to maximum normal operating angles, refer to the chart below.

Driveshaft RPM	Max. Normal Operating Angles	Driveshaft RPM	Max. Normal Operating Angles
5000	3.2°	3000	5.8°
4500	3.7°	2500	7.0°
4000	4.2°	2000	8.7°
3500	5.0°	1500	11.5°

*Based on application experience (1000 rad/sec acceleration).

THE FUNCTION OF ADRIVESHAFT

The basic function of a driveshaft is to transmit power from one point to another in a smooth and continuous action. In automobiles, trucks and construction equipment, the drivetrain is designed to send torque through an angle from the transmission to the axle (or auxiliary transmission).

The driveshaft must operate through constantly changing relative angles between the transmission and axle. It must also be capable of changing length while transmitting torque. The axle of a vehicle is not attached directly to the frame, but rides suspended by springs in an irregular, floating motion.

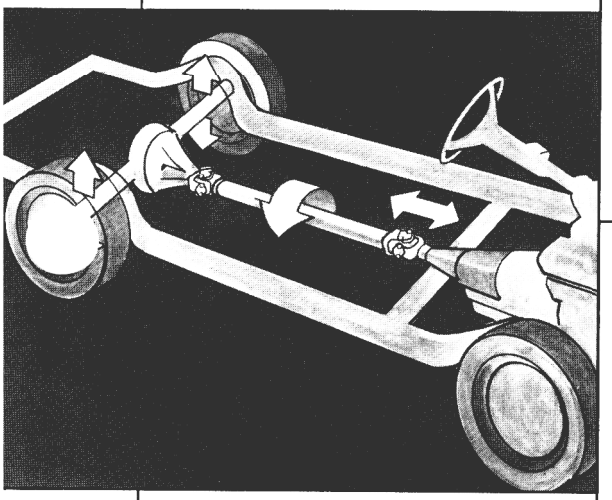

This means the driveshaft must be able to contract, expand and change operating angles when going over bumps or depressions. This is accomplished through universal joints, which permit the driveshaft to operate at different angles, and slip joints, which permit contraction or expansion to take place.

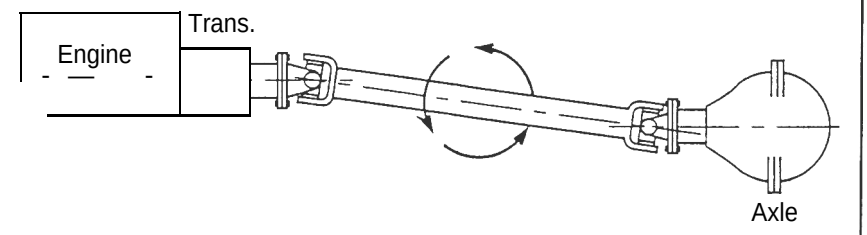

The geometry of a driveshaft in side view – vertical offset

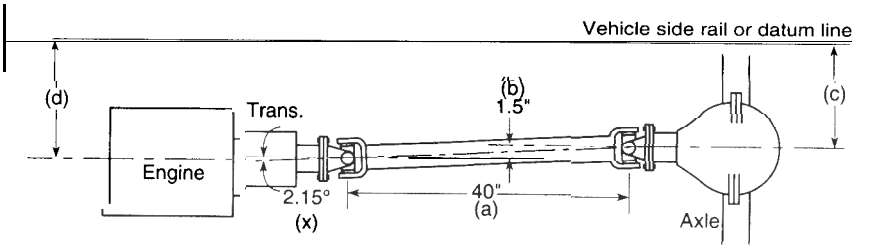

The geometry of a driveshaft in p/an view – horizonta/ offset

CONSTRUCTION OF A DRIVESHAFT (ALL TYPES)

To transmit required torque loads, the driveshaft must be durable and strong. Forged steel and high strength cast yokes, Including the Spicer Quick Disconnect™ end yoke for heavy duty vehicles, are used to provide the necessary rigidity required to maintain bearing alignment under torque loads. Spicer heavy-duty u-joint kits and Low Effort™ light-duty u-joint kits are designed to give extended driveshaft life.

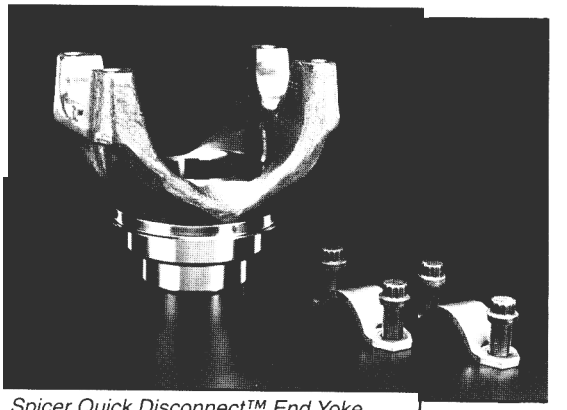

Spicer Quick Disconnect™ End Yoke

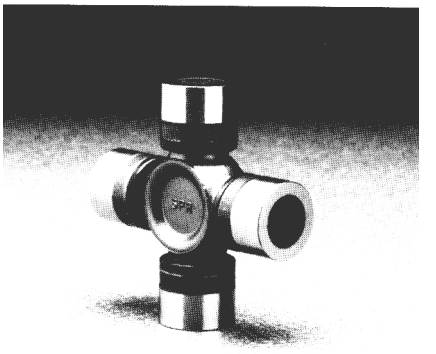

Spicer Lo w Effort™ U-Joint Kit

DRIVESHFT PARTS LISTING

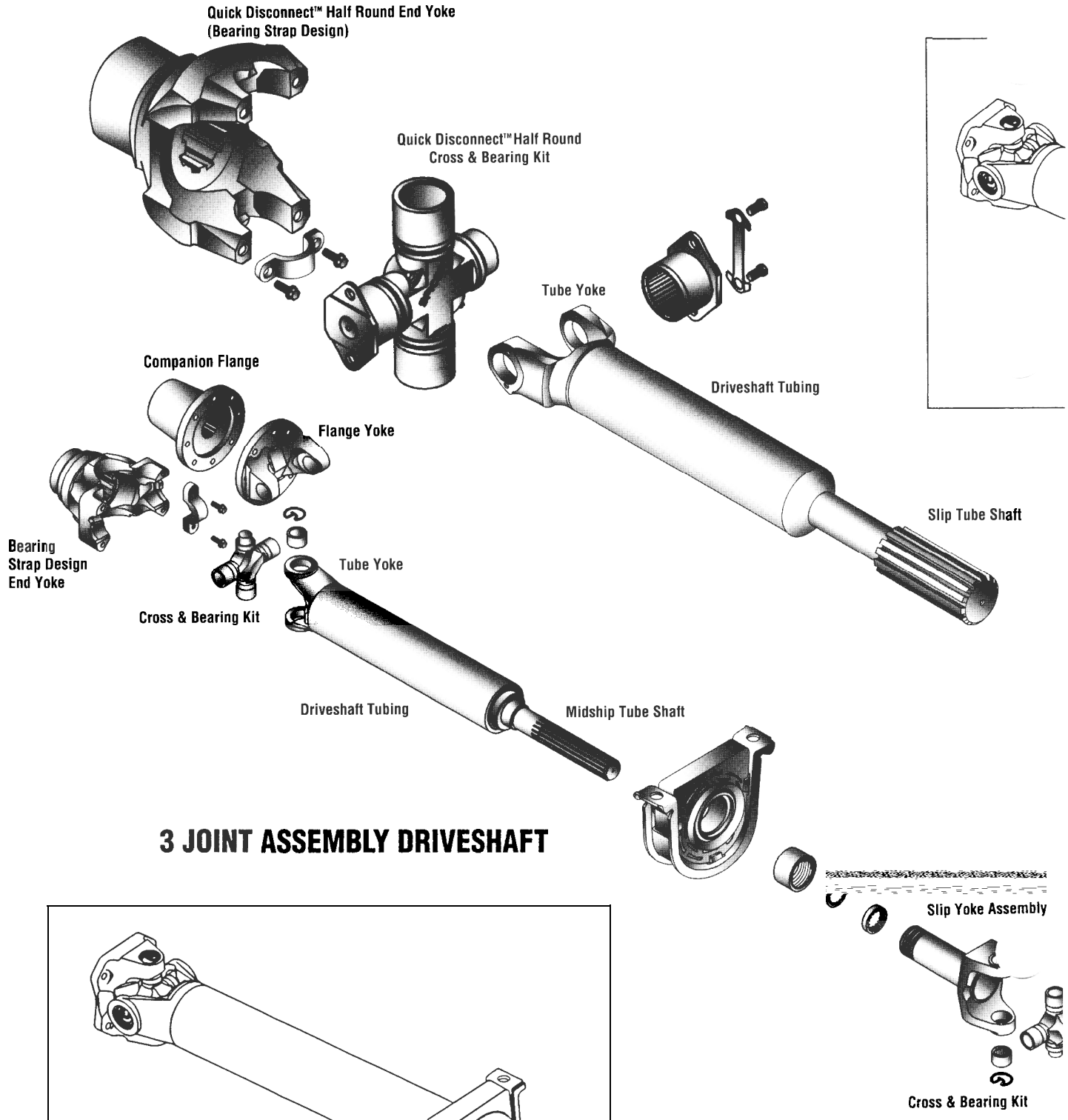

3 JOINT ASSEMBLY DRIVESHAFT

COUPLING SHAFT ASSEMBLY
(END YOKE STYLE)

COUPLING SHAFT ASSEMBLY
(SLIP YOKE STYLE)

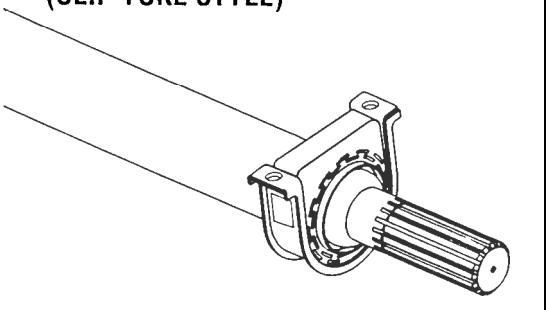

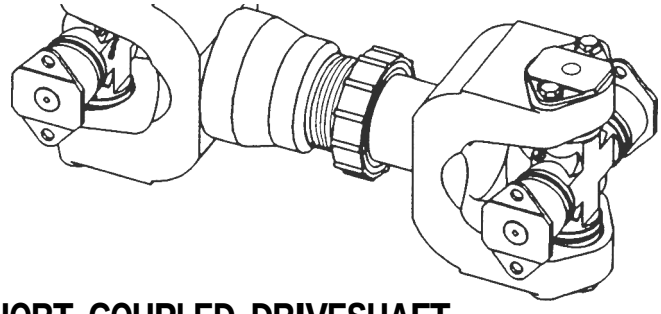

SHORT COUPLED DRIVESHAFT

2 JOINT ASSEMBLY DRIVESHAFT



Warning: Rotating shafts can be dangerous. You can snag clothes, skin, hair, hands, etc. This can cause a serious injury or death. Do not work on a shaft (with or without a guard) when the engine is running.

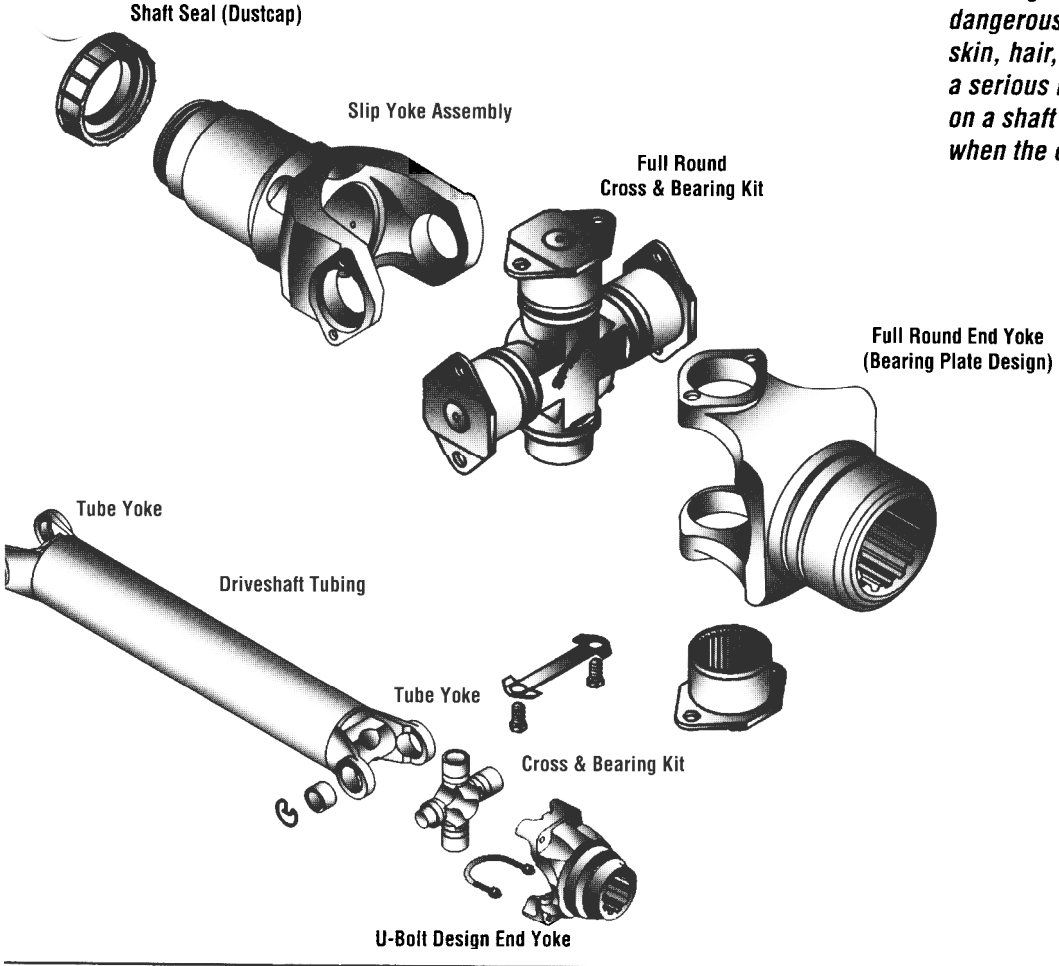

CONSTRUCTION OF A DRIVESHAFT

Anti-friction bearings are used to withstand required oscillating loads while the driveshaft is rotating at high speeds. The needle roller bearings on the trunnions of the cross carry large loads and are used because of their high capacity in a limited space.

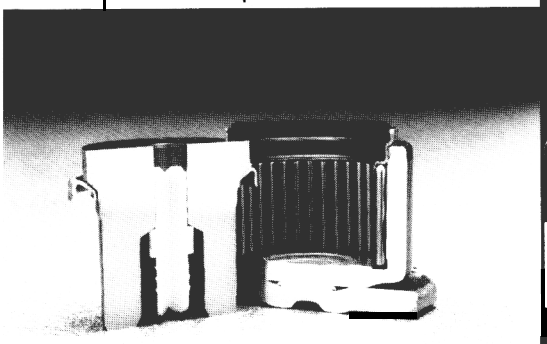

Spicer Positive Purging valve and exclusive crowned bearing race inside diameter.

Spicer's exclusive bearing assembly inside diameter crowning and tapered thrust pads distribute loads more evenly on needle roller bearings and cross trunnion ends to significantly reduce end galling. Bearing assemblies are individually sealed to provide retention of lubricants and prevent the entry of foreign material. If lubricants become contaminated with water or abrasive matter, needle roller bearing life is seriously affected.

Abrasive material is a major problem when a vehicle operates under conditions of extreme moisture and dirt. To combat this problem, synthetic rubber seals were developed and resulted in increased life, ability to withstand high temperature and a less critical relubrication cycle for driveshafts.

Special high-strength tubing is used to provide maximum torque carrying capacity at minimum practical weight. In addition to steel tubing in use for many years now, Spicer Lite™ aluminum and Graph-Lite™ composite (aluminum wrapped in graphite) driveshafts have been developed to meet the vehicular industry needs.

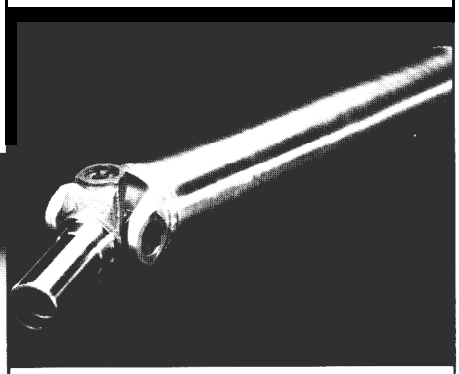

Spicer Lite™ Aluminum Driveshaft

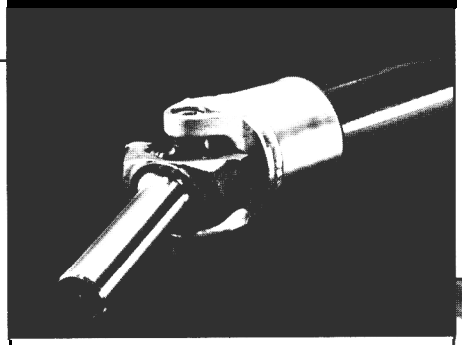

Spicer Graph Life™ Driveshaft

The sliding splines between slip joint and permanent joint must support the driveshaft and be capable of sliding under full torque loads. To aid in this axial or slip movement, Spicer Glidecote™ was developed to reduce sliding friction thereby reducing thrust loads under high torque. This non-metallic coating also prevents spline galling and extends spline life.

INSPECTING AND LUBRICATING THE DRIVESHAFT (All Types)



WARNING: Rotating shafts can be dangerous. You can snag clothes, skin, hair, hands, etc. This can cause serious injury or death. Do not work on a shaft (with or without a guard) when the engine is running.

INSPECTION

To keep a vehicle operating smoothly and economically the driveshaft must be carefully inspected at regular intervals. Vibrations and u-joint and shaft support (center) bearing problems are caused by such things as loose end yokes, excessive radial (side to side or up and down) looseness, slip spline radial looseness, bent shaft tubing, or missing plugs in the slip yoke.

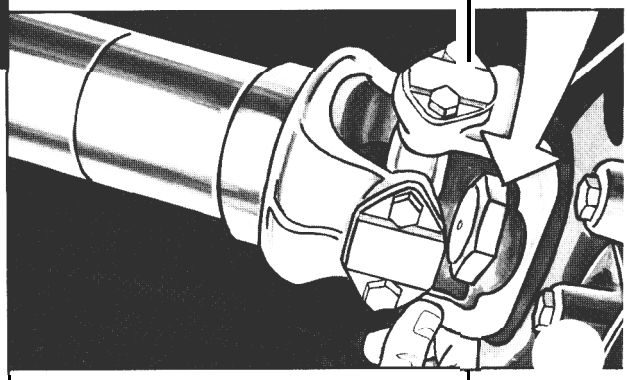

1. Check the output and input end yokes on both the transmission and axle, or axles, for looseness. If loose, disconnect the driveshaft and retorque the end yoke retaining nut to specification. If yoke replacement is required, check for manufacturer's recommendation regarding replacement frequency of the end yoke retaining nut.

ST

INSPECTING AND LUBRICATING THE DRIVESHAFT (ALL TYPES)

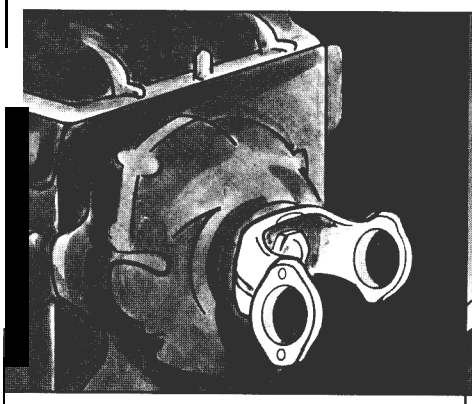

2. If the end yokes are tight, check for excessive radial looseness of the transmission output shaft and axle input and output shafts in their respective bearings. Consult transmission and axle manufacturer's specifications for acceptable radial looseness limits and method of **checking.**

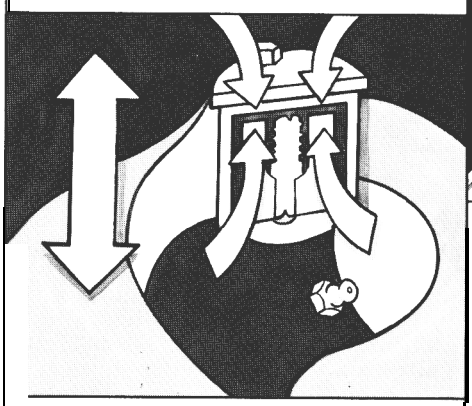

3. Check for excessive looseness across the ends of the bearing assemblies and trunnions. This looseness should not exceed .006 inches maximum.

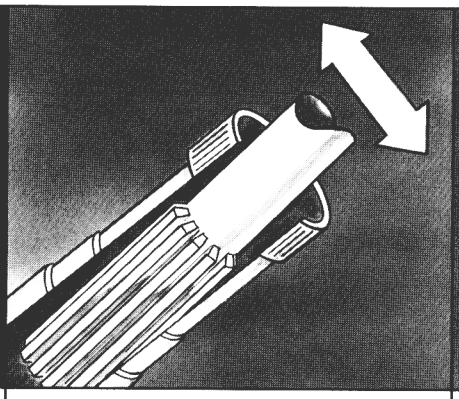

4. Check the slip spline for excessive radial movement. Radial looseness between the slip yoke and the tube shaft should not exceed .007 inches.

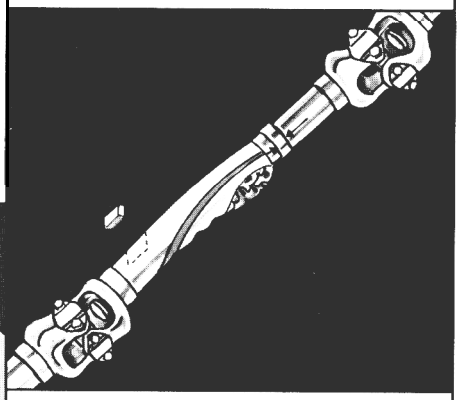

5. Check the shaft for damaged, bent tubing or missing balance weights. Make certain there is no build up of foreign material on the shaft, such as undercoat or concrete. If found, they should be removed carefully to avoid damage to the driveshaft.

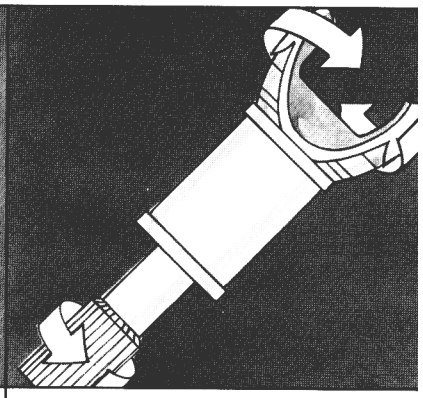

6. If runout readings are required, they should be taken with the driveshaft mounted in the vehicle, with the transmission in neutral and the axle shafts pulled, or by jacking rear wheels off the ground and placing axles on jack stands. This will allow rotating the driveshaft by hand to check indicator readings. The runout readings taken at the various locations should not exceed an additional 0.010 T.I.R. over the manufacturer's specified runout. (See page 24)

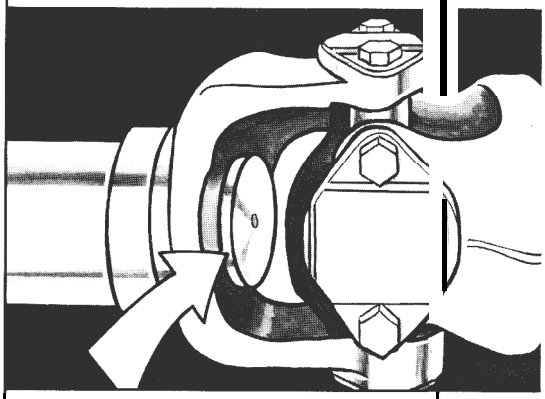

7. For an inboard and outboard slip yoke assembly design, check to be sure the plug is not loose or missing . . if it is, repair or replace it. Loose or missing plugs are commonly caused by not enough driveshaft slip capability.

INSPECTING AND LUBRICATING

LUBRICATION

Among the most common causes of joint and slip problems is lack of proper lubrication. Properly sized Spicer U-joints that are adequately relubricated at recommended intervals will normally meet or exceed vehicle operation requirements. Relubrication flushes the joints thus removing abrasive contaminants from the bearings.

LUBRICANTS FOR UNIVERSAL JOINTS

For a standard application, use a good quality E.P. (extreme pressure) grease (Timkin Test Load 45 lbs. min) meeting *N.L.G.I. Grade 2 specifications.

Grease must have an operating range of +325°F/+163°C to -10°F/-23°C and be compatible with commonly used multi-purpose greases such as Lithium Soap Types.

For driveshaft applications involving shaft speeds below 500 RPM, a mineral oil in the SAE 140 to 250 viscosity range should be used.

Consult your local lubricant source for greases that meet these specifications.

N.L.G.I. *E.P. Grade 2
Lubricating Grease

* National Lubricating Grease Institute

INITIAL LUBRICATION AND RELUBE CYCLES

Spicer replacement universal joint kits contain only enough grease to provide needle roller bearing protection during storage. It is therefore necessary to completely lubricate each replacement kit prior to assembly into the yokes. Each cross lube reservoir should be fully packed with a recommended grease and each bearing assembly should also be wiped with the same grease, filling all the cavities between the needle rollers and applying a liberal grease coating on the bottom of each bearing assembly. Too much grease may cause hydraulic "lock-up", making installation difficult. After the kits are installed into the yokes and prior to placing into service, they should be relubed, through the lube fitting, using the same grease.



Relubrication cycles vary depending on the service requirements and operating conditions of the vehicle. A recommended relube cycle for various types of service is shown below.

NOTE: On-highway is defined as all applications requiring less than 10% of operating time on gravel, dirt or unimproved roads. If longer than 10% operating time off-highway use off-high way recommendations.

TYPE OF SERVICE	MILES or TIME	
CITY	5000/8000	3 MONTHS
ON HIGHWAY [MID-RANGE)	10,000/15,000	3 MONTHS
ON HIGHWAY [LINE-HAUL)	10,000/15,000	30 DAYS
ON/OFF HIGHWAY	5,000/8,000	3 MONTHS
OFF HIGHWAY/ INDUSTRIAL		500/200 HRS."

"Relubrication cycles for off highway and industrial use vary depending on the application and operating conditions In general, to obtain maximum life, relubrication should occur every 500 hours for normal service and every 200 hours for continuous service or severe environnemental conditions

LUBRICATION PROCEDURE FOR U-JOINTS

(Except Constant Velocity Type Joints)

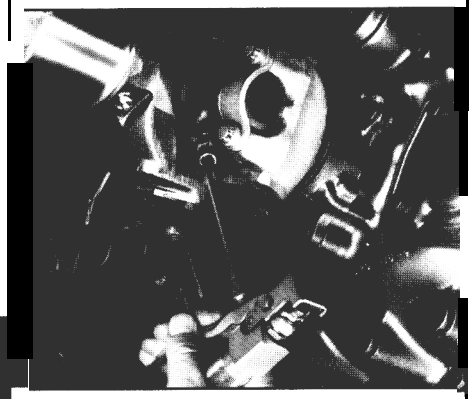



WARNING: Rotating shafts can be dangerous. You can snag clothes, skin, hair, hands, etc. This can cause serious injury or death.

Do not work on a shaft (with or without a guard) when the engine is running.

Do not go under the vehicle when the engine is running.

In order to avoid becoming entangled install power take-off and/or shaft behind the frame rail, tanks, battery box, etc.

If power take-off and/or shaft are still exposed after installation, install a guard.

1. Use the proper lubricant to purge all four seals of each u-joint. This flushes abrasive contaminants from each bearing assembly and assures all four are filled. Pop the seals. Spicer seals are made to be popped.

2. On center twin zerk design or single zerk kits, if any of the seals fail to purge, move the driveshaft from side to side and then apply gun pressure. This allows greater clearance on the thrust end of the bearing assembly that is not purging. On two-zerk kits, try greasing from the opposite lube fitting. For light-duty kits, check for a fully seated snap ring or burrs on the snap ring or snap ring groove.

3. Because of the superior sealing capability of the Spicer Seal design on the 1610, 1710, 1760, 1810 and 1880 Series, there will occasionally be one or more bearing assembly seals that will not purge.

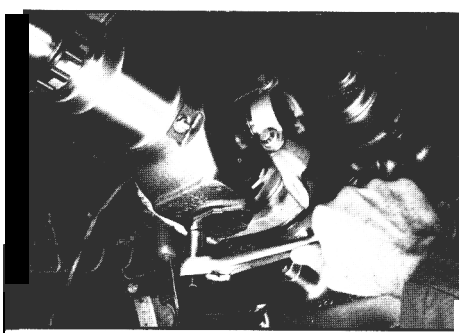

Release seal tension by loosening the bolts holding the bearing assembly that doesn't purge. It may be necessary to loosen the bearing assembly approximately 1/16 inch minimum. If loosening it does not cause purging, remove the bearing assembly to determine cause of blockage.

4. Install new bolts and torque to specifications.

CAUTION: Retaining bolts should not be reused. If loosening or removal of bolts is necessary, install new bolts and torque to specification.

LUBRICATION FOR SLIP SPLINES

The lubricant used for u-joints is satisfactory for slip splines. Glidecote™ and steel splines both use a good E.P. grease meeting N. L.G. I. Grade 2 specifications.

Relube splines at the intervals recommended in the chart for u-joints.

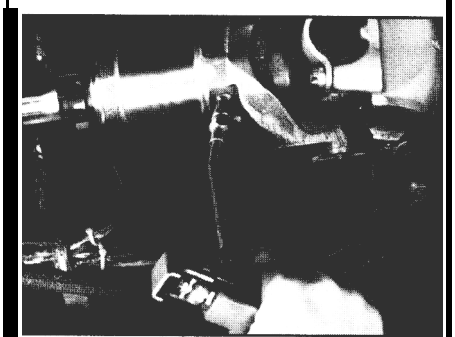

1. Apply grease gun pressure to the lube fitting until lubricant appears at the pressure relief hole in the plug at the slip yoke end of the spline.

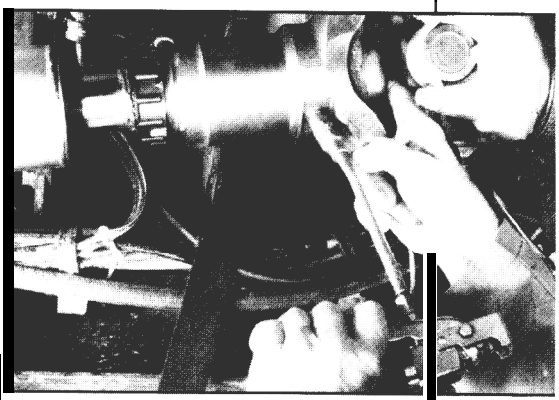

2. Now cover the pressure relief hole with your finger and continue to apply pressure until grease appears at the slip yoke seal.

CAUTfON: *In cold temperatures be sure to drive the vehicle immediately after lubricating. This activates the slip spline and removes the excessive lubricant. Failure to do so could cause the excess lubricant to stiffen in the cold weather and force the plug out. The end of the spline would then be open to collect* ***contaminants and cause the spline to wear and/or seize.***

SHAFT SUPPORT BEARING ASSEMBLIES

Bearing manufacturers do the initial lubrication and all Spicer shaft support (center) bearings are lubed for life. When replacing a shaft support bearing assembly, be sure to fill the entire cavity around the bearing with waterproof grease to shield the bearing from water and contaminants. Enough grease must be put in to fill the cavity to the extreme edge of the slinger surrounding the bearing. Lubricants must be waterproof. The following chart lists recommended waterproof lubricants for use with center bearings.

SERVICING THE DRIVESHAFT

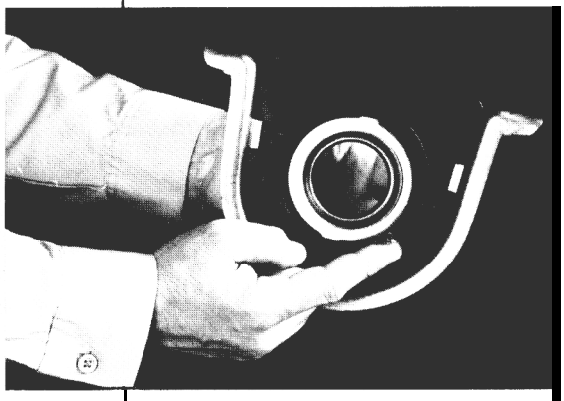

NOTE: *There are numerous instances when special lubrication is required by vehicle specification or customer request. The lubrication recommendations listed in this manual are what Spicer U-Joint engineers suggest. Any alternate lubricants, or lubrication procedures, are the responsibility of the user.*

Recommended Lubricants - Source

Rykon Premium No. 3
- Amoco Oil Company

Sun C-34 Grease (Cup No. 4)
- Sun Oil Company

Amolith 8516
- Amoco Oil Company

Van Talgar No. 4
- Exxon Company



SERVICING THE DRIVESHAFT'

Heavy Duty Application

Cross and Bearing Kit Replacement
Bearing Plate Design

Full Round and Quick Disconnect End Yoke Designs

Special Tools:

Torque wrench (125 lb./ft.)
Journal locator
U-joint press
V-block
- Alignment bar/No Go wear gauge

Common hand tools

One of the following is recommended:
Owatonna tool kit (#7057)
(Two-jaw puller)
Tiger tool kit
JJAG tool kit
J & J tool kit

'Available only from Dana Corporation Spicer Service Representatives.

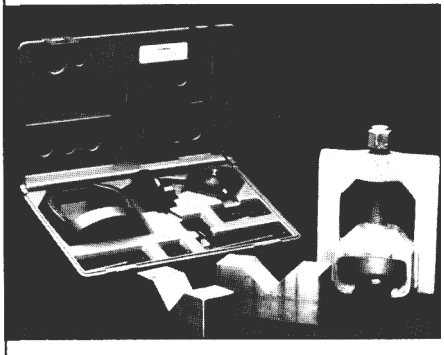

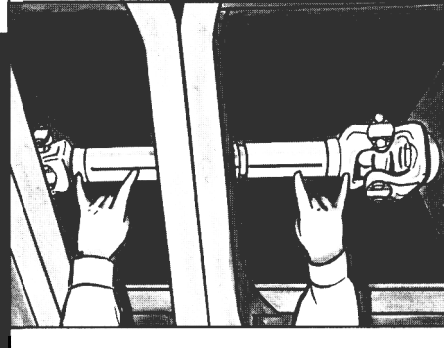

NOTE: Before removal of the driveshaft set the brakes, block the wheels, and mark the slip yoke assembly and tube shaft with a marking stick or paint to assure proper alignment when reassembled, This is known as keeping the driveshaft yokes "In Phase."

CAUTION: Never heat components or use sledge hammers and floor jacks to disassemble driveshafts. This can result in damaged, weakened or bent components.



WARNING: Rotating shafts can be dangerous. You can snag clothes, skin, hair, hands, etc. This can cause serious injury or death. Do not work on a shaft (with or without a guard) when the engine is running.

REMOVAL

(Full Round End Yoke Style)

1. The method of driveshaft removal should be one that assures safety and ease of removal to the mechanic without damage to the driveshaft, transmission or axle components. Suggested method is use of a u-joint puller: Owatonna tool kit #7057, Tiger tool kit, JJAG tool kit, or J&J tool kit.

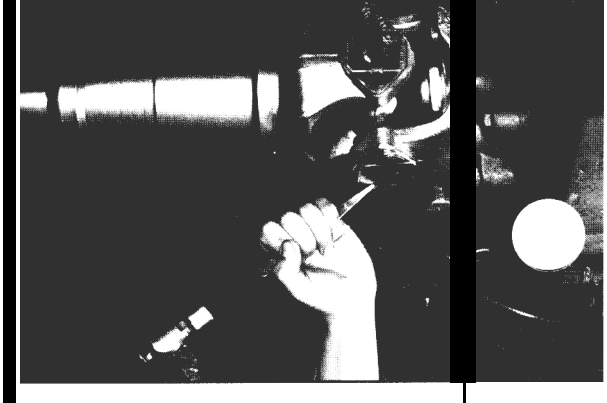

2. Bend tabs of lock straps away from bolt heads with a chisel.

NOTE: The self-locking bolt design for full-round end yokes uses serrated bolts with lock patch and DOES NOT require a lock strap.

SERVICING THE DRIVESHAFT

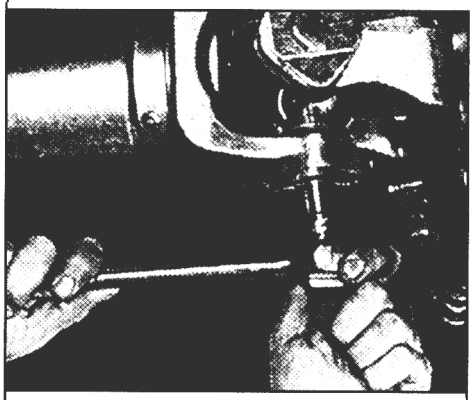

3. *Remove* bolts (four) from each bearing assembly connected to the transmission and axle end yoke.

CAUTION: *If a u-joint kit is to be reused, care should be taken not to nick trunnions or damage slingers.*

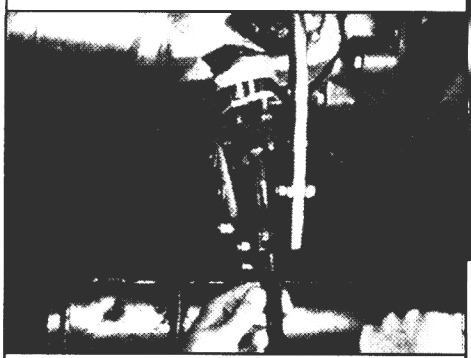

4. Remove bearing assemblies from the yoke cross holes using a u-joint removal tool kit.

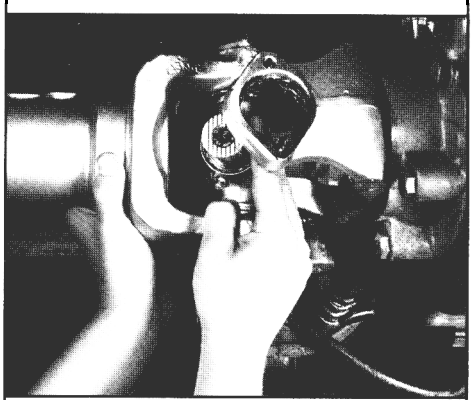

5. Free the trunnion from the end yoke by tilting the trunnion and collapsing the driveshaft.

NOTE: If only one end of the driveshaft requires service, disconnect that end, unscrew the slip shaft seal (dustcap) from the slip yoke assembly and then pull apart or slide off the assembly. When removing the entire driveshaft, disassemble one end at a time, laying the disconnected end on the floor carefully. When reassembling, BE SURE that the marks on the shaft and slip joint are in line to keep the driveshaft yokes in phase.

REMOVAL (Quick Disconnect™ Half Round End Yoke Style)

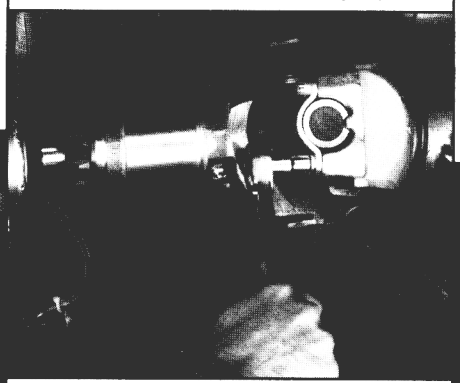

For half round end yoke disassembly install a nylon support strap, remove the bearing strap retaining bolts, one end at a time, and release the driveshaft.

REMOVAL (Flange Yoke Style)

1. Install nylon support strap. Loosen and remove nuts and bolts securing flange yoke to transmission or axle companion flange.
2. Holding driveshaft firmly, tap loose and compress from one end and lower to floor.
3. Repeat at other end.

DISASSEMBLY

(Full Round Style)

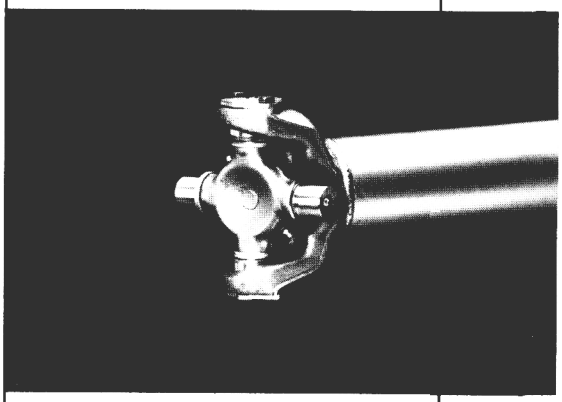

1. Place the driveshaft in v-blocks to remove the cross and bearing assemblies.

CAUTION: *Do not distort the tube with excessive grip.*

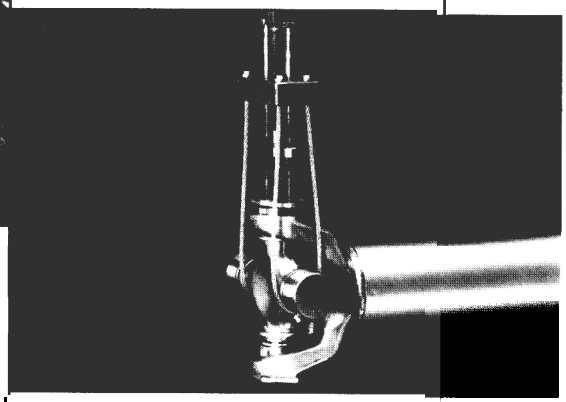

2. Completely remove the cross and bearings from both ends of the driveshaft by disassembling the bearing assemblies from the slip yoke and the tube yoke (and flange yoke where applicable) using a tool kit.

SERVICING THE DRIVESHAFT

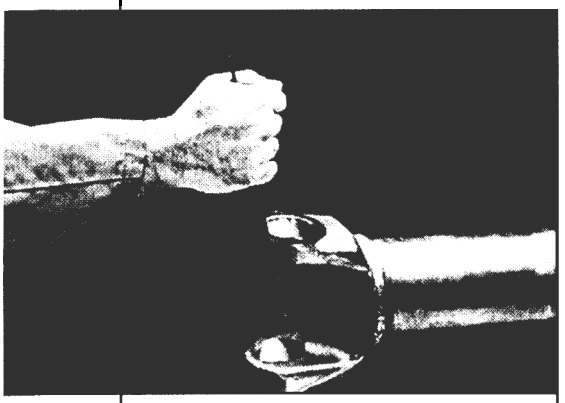



3. After removing the cross and bearings, both ends, inspect the cross hole surfaces for damage or raised metal. Raised metal can be removed with a rat tail or half round file and emery cloth. Check the yoke lug crossholes with a No-Go Wear Gauge and then use a Spicer Alignment Bar to inspect for damage by sliding through both cross holes simultaneously. The alignment bar will identify yoke lugs that have taken a set because of excessive torque. The raised metal or distorted lugs can be a cause of premature cross and bearing problems.

At this time, clean the cross holes of the yokes on the transmission and axle and inspect with an alignment bar gauge as described above.

If after proper cleaning of the cross holes the alignment bar will not pass through simultaneously, the yoke lugs are distorted and the yoke or yokes should be replaced.

CAUTION: *Use a journal locator to avoid nicking journal cross trunnions or damaging oil seal slingers.*

DISASSEMBLY

(Quick Disconnect™ Half Round End Yoke Style)

1. Place the driveshaft in v-blocks to remove the cross and bearing assemblies.

2. Completely remove the cross and bearings from both ends of the driveshaft by removing the bolts and bearing straps.

3. Remove the end yoke from the driveshaft and place in a soft jawed vise to inspect the crosshole surfaces. Raised metal can be removed with a rat tail or half round file. Emery cloth should be used to remove all rust and corrosion from crosshole bores.

4. Check the yoke for crosshole alignment using the Spicer Alignment gauge. Place the correct bushing in each lug ear allowing a .03 to .06 clearance between the tang and the bushing.



Assemble bearing straps and bolts, tightening bolts a minimum of 30 ft. lbs. Insert the alignment gauge into one crosshole. If the gauge enters and passes through the opposite crosshole, alignment is correct. If the alignment gauge will not enter the opposite crosshole, reinspect for burrs.

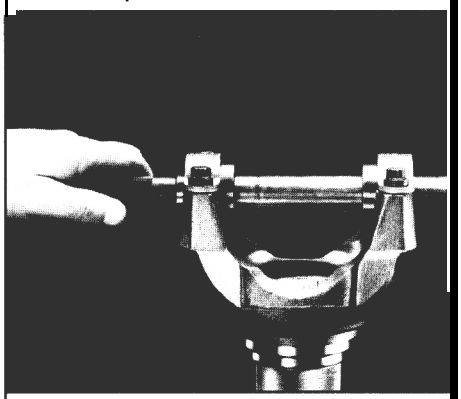

If, after proper cleaning, the alignment gauge still does not pass through both crossholes, the yoke lugs are distorted and the yoke should be replaced.

REASSEMBLY

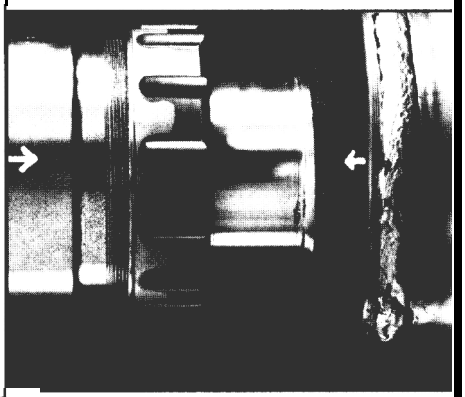

1. Place each end of the driveshaft, less cross and bearing kits, on v-blocks. Check the paint marking placed on the tube and slip yoke assembly prior to removing from the vehicle to be sure they are lined up or “in phase.”

SERVICING THE DRIVESHAFT

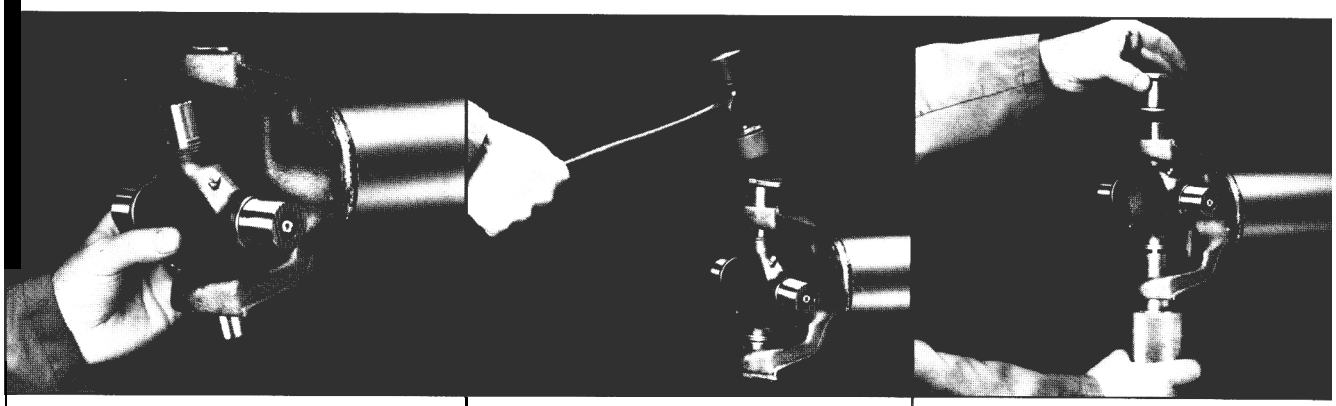

2. Remove the cross and bearings from the box and remove all four bearing assemblies.

   Rotate the cross to inspect for presence of the positive purging valve in each lube hole of all four trunnions. Then position the cross into the end yoke with its lube fitting in line as near as possible with the slip spline lube fitting. Keep the lube fitting on the inboard side.

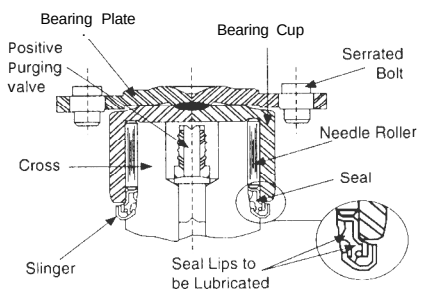

3. The lips of the seal on the u-joint **must** be lubricated with a light weight oil to prevent the seal from turning inside out upon installation. Also, each cross reservoir must be packed with grease and **each** cap bearing wiped with grease prior to assembly.

4. Move one end of the cross to cause a trunnion to project through the cross hole beyond the outer machined face of the yoke lug. Place a bearing assembly over the trunnion diameter and align it to the cross hole.

   Holding the trunnion in alignment with the cross hole, using the journal locator, press bearing assembly flush to face of end yoke by hand.

   A journal locator should be used to prevent damage to the u-joint trunnions and slingers. If the u-joint bearing cap is pressed into place, the bearings and bearing surfaces could be damaged.

   If bearing assembly binds in cross hole, tap with soft hammer directly in center of bearing assembly plate. Do not tap outer edges of bearing plate.

   Exact fit of all driveline components is extremely important. The correct parts and clean mating surfaces are essential for safe operation and good repair.

5. When the bearing assembly is completely seated, put the lock plate tab in place and use the “Grade Eight” cap screws that are furnished with the kit and insert them through the cap screw holes in both the lock strap and bearing assembly. Thread with hand or wrench into tapped holes in yoke. Do not torque down bolts.

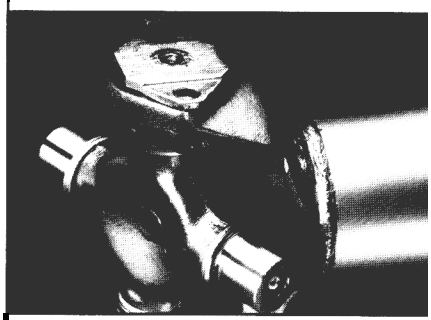

NOTE: *The self-locking bolt design for full-round yokes uses serrated bolts with lock patch and DOES NOT require a lock strap. DO NOT reuse ANY retaining bolt. If loosening or removal of a bolt is necessary, replace with a new one.*

6. Move the cross laterally to the opposite side and through the cross hole beyond the machined surface of the yoke lug. Place a bearing assembly over the cross trunnion and slide it into the cross hole, seating the plate to the face of the lug. Put the lock plate tab in place and thread the bolts with hand or wrench into tapped holes in yoke.

NOTE: Projecting the trunnion through a cross hole beyond the machined surface of the lug will provide a surface to help align the bearing assembly with the cross hole. This method should also be followed when assembling driveshaft to yokes of vehicle at 'transmission and axle or axles.

7. Repeat process of installation of cross and bearing kit at opposite end of the driveshaft. Make sure to position the cross in the yoke so that the lube fitting is in line with the lube fitting at the other end.

8. For flange yoke applications, install the flange yoke, bearing assemblies and bolts at this time.

CAUTION: Worn bearing assemblies used with a new cross or new bearing assemblies used with a worn cross will wear rapidly making *another replacement necessary in a short time.*

Always Replace the Cross, Four Bearing Assemblies and Bolts as a Unit.

INSTALLKTION IN VEHICLE

The installation of a driveshaft does not present any unusual mechanical difficulties. Before actual installation the driveshaft should be checked for the following items:

✓ Damage or dents on the driveshaft tubing.

✓ Splines should slide freely with slight drag from slip shaft seal.

✓ Cross should flex and be free from excessive bind. A slight drag is the most desirable condition on a new cross and bearing kit. Excessive looseness is not desirable and will result in an unbalanced driveshaft.

✓ Mounting flanges and pilots should be free from burrs, paint and foreign substances which would not allow proper seating at assembly.

When servicing system balanced assemblies it is imperative that the following rules be strictly adhered to:

1. Sleeve yokes to midship shafts, end yokes, companion flanges, etc. must not be rotated from their original position during reassembly.

2. It is strongly recommended that an indexing mark or line be painted down the entire length of all assemblies prior to removal from the vehicle.

3. Upon reassembly, all components must be reinstalled exactly as removed. Do not turn yokes or sleeves from their original position.

   For Spicer slip yoke interaxle applications, the slip yoke should be installed with the yoke ears "up hill" from the seal. In main driveshaft applications, the slip yoke seal should be up hill or with the slip yoke at the transmission in transmission-to-axle applications.

4. If at all possible, do not remove boots or dust caps from sleeve assemblies.

5. Inspect boots for any damage (rips or holes). If boot is damaged, it must be discarded. Do not reuse clamps.

6. Push on dust caps are not serviceable. If dust cap must be removed, replace it with a new one.

7. If a boot must be disconnected, remove the clamp at the sleeve end and leave the other end attached. Do not reuse clamp.

8. IMPORTANT: If any major component is replaced on any of the assemblies (any component other than boots, dust caps, or u-joints), the entire system balanced assembly must be rebalanced by a competent driveshaft repair facility capable of system balancing.

Failure to adhere to these recommendations can cause excessive driveline vibration and/or premature component failure.

***NOTE:** The unitized one piece seal now used on Spicer driveshafts is not intended to be removed in service. When servicing driveshafts with the pop on seal, DO NOT remove the seal from the slip yoke. Pull the tube shaft out of the slip yoke and carefully realign the splines on the tube shaft with the slip yoke upon reassembly. To separate the tube shaft from the slip yoke, pull the tube out of the slip yoke, leaving the seal in place. A significant amount of force will be required to remove as well as reinstall the tube shaft through the seal. Removal of the unitized seal causes damage to the seal lip where it contacts the slip yoke. If removal of the seal is absolutely necessary, it should be replaced with a new unit.*

To remove the old seal, hold the yoke assembly firmly in a vise. Using a large chisel, drive the seal off of the yoke. To install a new seal, generously lubricate the seal lip and press the new seal into place using a small arbor press or equivalent.



WARNING: Rotating shafts can be dangerous. You can snag clothes, skin, hair, hands, etc. This can cause serious injury or death.

SERVICING THE DRIVESHAFT

Do not go under the vehicle when the engine is running.

Do not work on a shaft (with or without a guard) when the engine is running,

Do not engage or disengage driven equipment by hand from under the vehicle when the engine is running,

In order to avoid becoming entangled, install the power take-off and/or shaft behind the frame rail, tanks, battery box, etc.

If power take-off and/or shaft are still exposed after installation, install a guard,

Install a support strap when servicing a driveshaft to prevent personal injury.

FULL ROUND END YOKE STYLE

1. Rotate the transmission end yoke by putting the transmission in neutral and the axle end yoke by jacking up one rear wheel, so the cross holes are in a horizontal position.

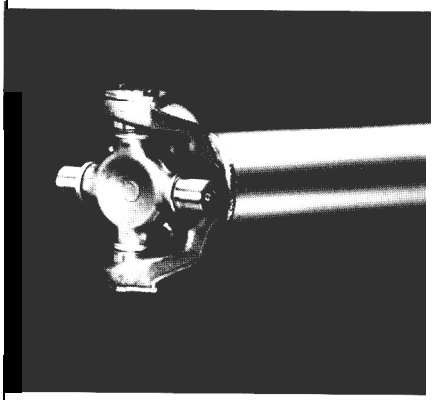

2. Tilt the cross trunnions of the driveshaft, both ends, with trunnions pointing toward each other from end to end, one side. Install with the slip joint nearest the source of power. Use a nylon support strap to aid in handling the driveshaft.

CAUTION: Use a journal cross locator to avoid nicking journal cross trunnions or damaging oil seal slingers.

3. Holding the driveshaft firmly, project a trunnion in an outward position between the lugs of either the axle or the transmission end yoke and through a cross hole. Repeat at opposite end. The driveshaft is being supported at each end by one trunnion surface in a cross hole and the nylon support strap.

   Tilt a cross trunnion until the opposite side can be inserted through a cross hole. Repeat at opposite end. The driveshaft is now being supported at each end by two trunnion surfaces in the cross holes and the nylon support strap.

4. Move one end of the shaft to cause a trunnion to project through the cross hole beyond the outer machined face of the yoke lug. Place a bearing assembly over the trunnion diameter and align it to the cross hole.

   Holding the trunnion in alignment with the cross hole, press bearing assembly flush to face of end yoke by hand.

   If bearing assembly binds in cross hole, tap with soft hammer directly in center of bearing assembly plate. Do not tap outer edges of bearing plate.

5. Slide the shaft to project an opposite trunnion through the cross hole beyond the face of the end yoke. Again, place a bearing assembly over the trunnion, align and place hands on opposite bearing assembly, and press both inward flush to yoke faces. If assembly binds, tap with soft hammer as outlined above. Put the lock plate tab in place and insert the "Grade Eight" cap screws through the holes in the lock plates and bearing assemblies. Thread cap screws into end yokes. Tighten with wrench until plates are flush against end yoke faces.

6. Lubricate the cross and bearing assembly until lube appears at all four seals. If any seal fails to purge, see "Lubrication Procedure for U-Joints." Also check slip yoke lubrication.

7. Torque all eight bolts to specification (see chart below). Bend lock plate tabs to flat of cap screwheads to lock in place.

NOTE: The self-locking bolt design for full-round yokes uses serrated bolts with lock patch and DOES NOT require a lock strap. DO NOT reuse ANY retaining bolts.

8. Repeat at opposite end. Remove nylon support strap.

FULL ROUND END YOKE

SERIES	THREAD SIZE	TORQUE LOCK STRAP DESIGN (Lb./Ft.)	(NM)	Bolt P/N	SERRATED BOLT w/LOCK PATCH (Lb./Ft.)	(NM)	Bolt P/N
1610	.312-24	26-35	35-48	5-73-109	26-35	35-48	5-73-709
1710	.375-24	38-48	52-65	6-73-109	38-48	52-65	6-73-209
1760	.375-24	38-48	52-65	6-73-109	38-48	52-65	6-73-209
1810	.375-24	38-48	52-65	6-73-109	38-48	52-65	6-73-209
1880	,438-20	60-70	81-95	7-73-115	*60-70*	*81-95*	*7-73-315*

SERVICING THE DRIVESHAFT

QUICK DISCONNECT™ HALF ROUND END YOKE

SERIES	THREAD SIZE	BOLT P/N	BOLT TORQUE (Lb./Ft.)	(NM)
SPL90	.375-24	6-73-412	45-60	61-81
1610	.375-24	6-73-412	45-60	61-81
1710	.500-20	8-73-316	115-135	156-183
1760	.500-20	8-73-316	115-135	156-183
1810	.500-20	8-73-316	115-135	156-183

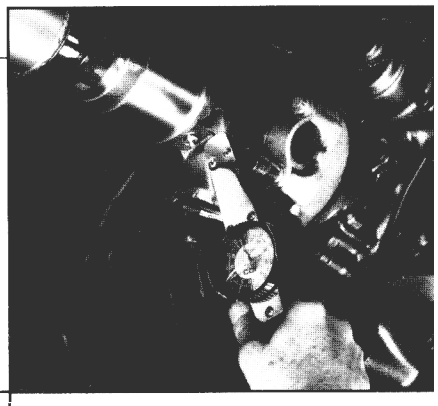

On Quick Disconnect applications, the bearing saddles of the end yoke must be clean and free of any contaminants.

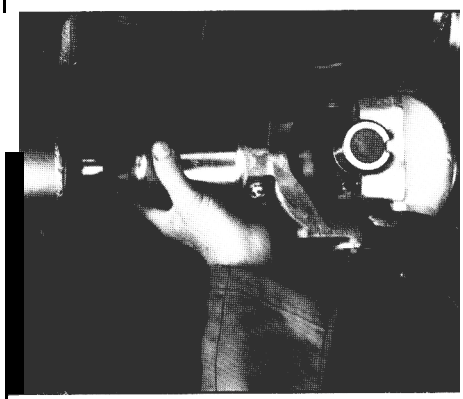

Using a soft hammer, tap the bearing assemblies until they are fully seated into the end yoke. Check to be sure the cups are fully seated in the bearing saddles of the yoke behind the yoke tabs as shown below.

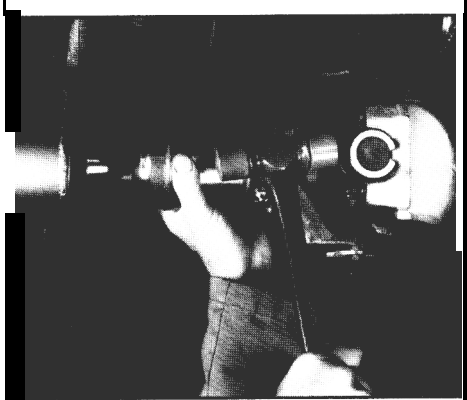

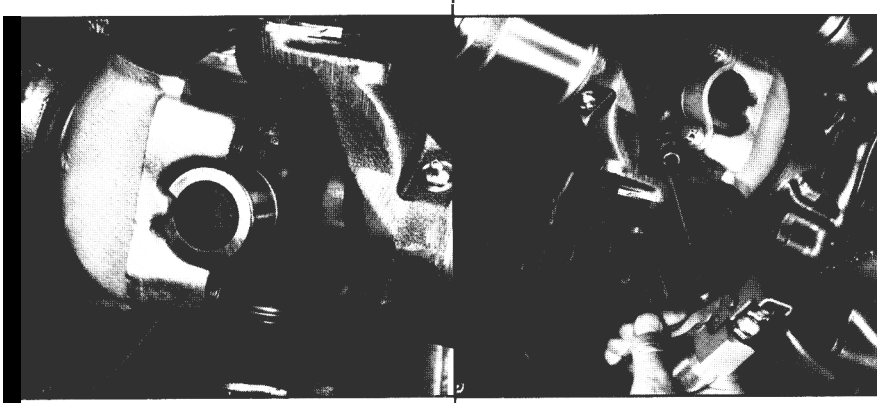

Install the bearing straps and bolts and torque all eight bolts to the proper specification. Bend lock plate tabs to flat of cap screwheads to lock in place.

NOTE: The self-locking bolt design for full-round yokes uses serrated bolts with lock patch and DOES NOT require a lock strap. DO NOT reuse ANY retaining bolts.

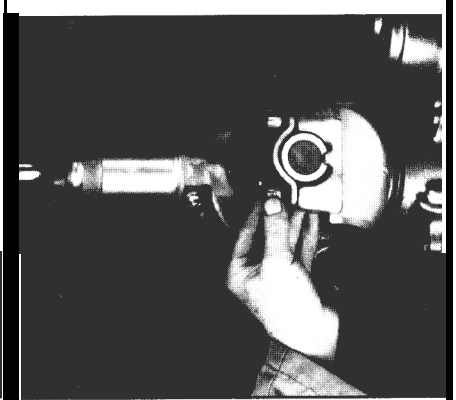

Lubricate the cross and bearing assembly until lube appears at all four seals. If any seal fails to purge, see "Lubrication Procedure for U-Joints." Also check slip yoke lubrication.

CAUTION: Excessive bearing rotation could cause premature wear of components involved. The causes of rotation are:

1. Use of non-Spicer parts with Genuine Spicer components.
2. Improper torque on retaining strap bolts.
3. Failure to firmly seat both bearing assemblies in the end yoke saddles before the strap bolts are tightened.
4. Dirty bearing saddles.

CAUTION: Half Round se/f-locking retaining bolts should not be reused. Follow instructions implicitly to prevent danger of serious personal injury or death from loss of driveshaft function.

SERVICING THE DRIVESHAFT

FLANGE YOKE

SERIES	THREAD SIZE	BOLT TORQUE (Lb./Ft.)	(NM)
SPL90	.375-24	40-48	54-65
1610	.375-24	40-48	54-65
1710	.375-24	40-48	54-65
1760	.438-20	63-75	85-102
1810	,438-20	63-75	85-102
1880	.625-18	194-232	263-315

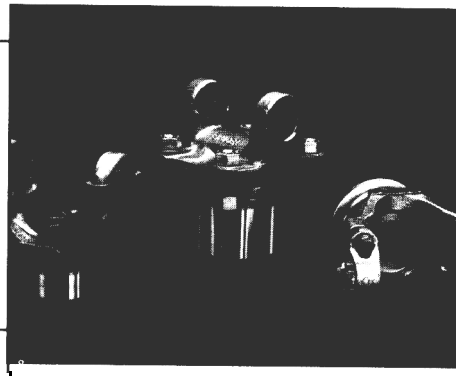

FLANGE YOKE STYLE

With nylon support strap in place and holding the driveshaft firmly, align the (permanent end) flange pilots of the driveshaft flange yoke and axle companion flange with each other. Align bolt holes and install bolts, lock washers and nuts to temporarily secure driveshaft to axle. Compress the slip assembly to position the opposite end of the driveshaft to the transmission companion flange. Align bolt holes and install bolts, lock washers, and nuts. Torque to specifications, both ends.

NOTE: 1650 Series Bearing Assemblies with Locking Flats.

When installing new bearing assemblies into cross holes, the locking flat on the bearing assembly must be aligned with the locking flat in the yoke cross hole. Proper location of locking flats will assure that the bearing assembly will not rotate.

LIGHT AND MEDIUM DUTY APPLICATION

Cross and Bearing Kit replacement

Inside and Outside Snap Ring, J-Bolt and Bearing Strap Design



! WARNING: Rotating shafts can be dangerous, You can snag clothes, skin, hair, hands, etc. This can cause serious injury or death. Do not go under the vehicle when the engine is running,

TOOLS (1000 -1500 SERIES):

Common Hand Tools

Soft Hammer

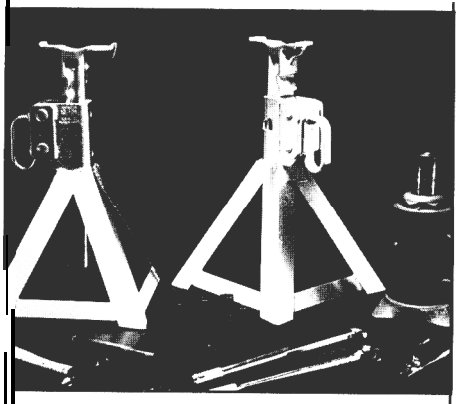

REMOVAL

Procedures for removing the driveshaft from light and medium duty vehicles are nearly the same as for heavy duty applications. One difference is that the cross and bearings vary in the method of attaching to the vehicle. Methods of attachment include u-bolt, bearing strap and flange yoke design.

For heavy driveshafts, support with a nylon support strap. Remove the u-bolts or strap cap screws from the end yoke. Slide the slip yoke toward the shaft to free the bearings from their seats between the yoke tabs in the end yokes, Care should be taken to avoid dropping the bearing assemblies. Repeat at opposite end.

For double flange applications, disassemble as a complete assembly by removing the companion flange bolts.

For flange yoke and end yoke combination-type driveshafts, remove as described above for whatever design applies.

OUTSIDE SNAP RING DESIGN (RELURABLE)

Disassembly

With the shaft removed, the following procedure should be fallowed

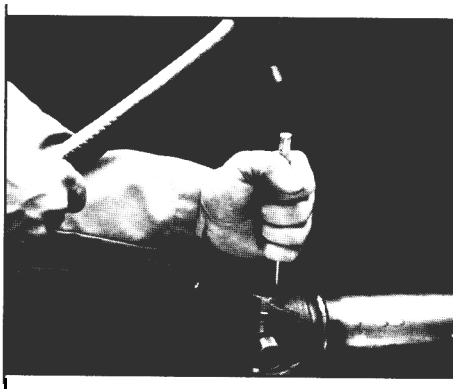

1. Using a soft drift, tap the outside of the bearing assembly to loosen snap ring. Tap bearing only hard enough to break assembly away from snap ring.

SERVICING THE DRIVESHAFT

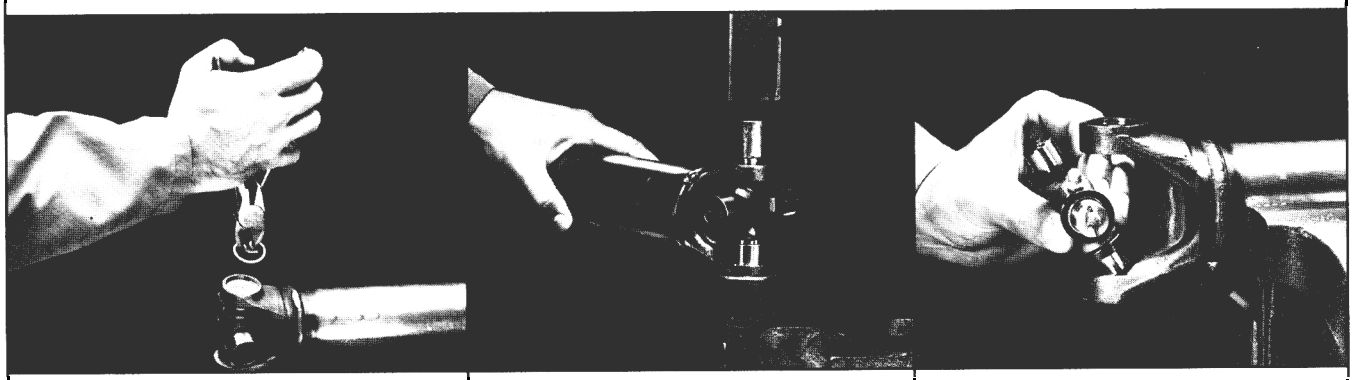

2. Remove snap ring from yoke. Turn joint over, tap bearing away from snap ring, then remove opposite snap ring.

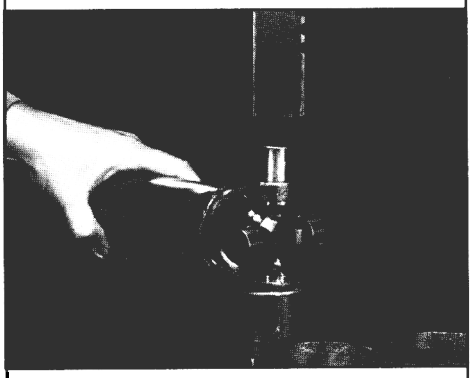

3. Set the yoke in the arbor press with a piece of tube stock beneath it. Position the yoke with the lube fitting pointing up to prevent interference during disassembly. Place a solid plug on the upper bearing assembly and press it through to release the lower bearing assembly.

4. If the bearing assembly will not pull out by hand after pressing, tap the base of the lug near the bearing assembly to dislodge it.

5. To remove the opposite bearing assembly, turn the yoke over and straighten the cross in the open cross hole. Then carefully press on the end of the cross so the remaining bearing assembly moves straight out of the bearing cross hole. If the cross or bearing assembly are cocked, the bearing assembly will score the walls of the cross hole and ruin the yoke.

6. Repeat this procedure on the remaining bearing assemblies to remove the cross from the yoke.

R e s s e m b l y

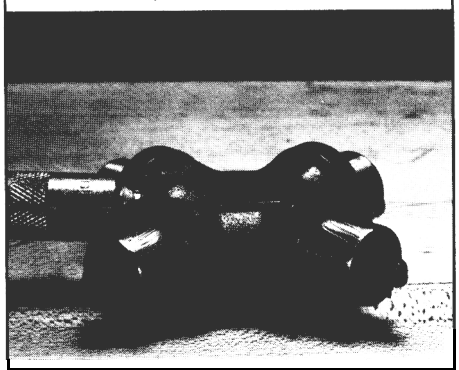

1. Pack the four grease cavities of the cross with a high quality extreme pressure N.L.G.I. Grade 2 grease (refer to page 6). Also pack each bearing assembly approximately 1/4 full with this grease.

2. Position the cross in the yoke with its lube fitting on the inboard side (toward driveshaft).

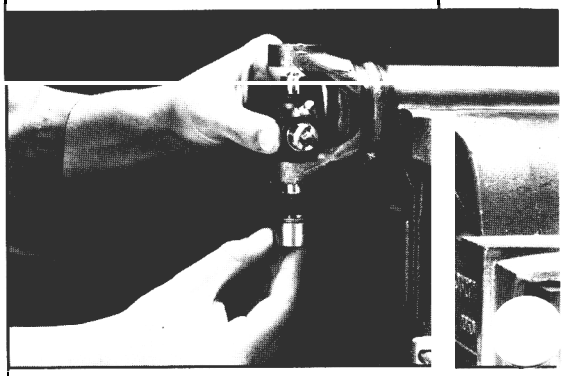

3. Move one end of the cross to cause a trunnion to project through the cross hole beyond the outer machined face of the yoke lug. Place a bearing assembly over the trunnion diameter and align it to the cross hole. Using an arbor press, hold the trunnion in alignment with the cross hole and place a solid plug on the upper bearing assembly. Press the bearing assembly into the cross hole enough to install a snap ring.

SERVICING THE DRIVESHAFT



4. Install a snap ring.



5. Repeat steps 3 and 4 to install the opposite bearing assembly. If the joint is stiff, strike the yoke ears with a soft hammer to seat the needle bearings.



CAUTION: Be sure snap rings are properly seated in grooves.

6. Repeat steps 2-5 at the opposite end of the driveshaft if installing a second kit. Make sure to keep lube fittings at each end of the driveshaft in line.

7. Install the reassembled driveshaft in the vehicle. If bearing straps or u-bolts hold the shaft in vehicle, be certain the bearing assemblies are fully seated between bearing locating shoulders.

8. Torque bolts to specification.

CAUTION: Self-locking bolts used with bearing straps should not be reused. Follow instructions implicitly to prevent danger of serious personal injury or death from loss of driveshaft function.

9. Apply more grease through the lube fitting until grease appears at all four bearing seals.

INSIDE SNAP RING DESIGN (RELUBABLE)

Disassembly



Removing an inside snap ring.

Repeat outside snap ring design disassembly instructions.

Reassembly

Repeat outside snap ring design reassembly instructions.



WARNING: Rotating shafts can be dangerous, You can snag clothes, skin, hair, hands, etc. This can cause serious injury or death. Do not go under the vehicle when the engine is running.

In order to avoid becoming entangled install power take-off and/or shaft behind the frame rail, tanks, battery box, etc.

If power take-off and/or shaft are still exposed after installation, install a guard,

PRELUBE OR LUBE-FOR-LIFE™ DESIGNS

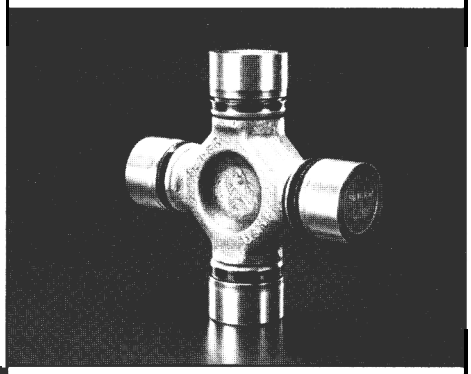

Spicer Prelube or Lube- for-Life™ U-joint Kit

Some Spicer crosses and bearings are prelube or lube-for-life designs and have no lube fittings. Since lubrication is critical, special seals are used to contain the lubricant in the cross/bearings in this design.

Service instructions are nearly the same for relubable and prelube or lube-for-life design, whether it is inside or outside snap ring, u-bolt or bearing strap design.

The difference is that lifetime lubrication is done by Spicer at the time of manufacture and relubrication should not be necessary. Replacement of the cross and bearing kit rather than relubrication is recommended.

TORQUE SPECS FOR LIGHT AND MEDIUM DUTY

POSITION	BOLT SIZE	TORQUE (Lb./Ft.)	TORQUE (NM)
U-Bolts	(5/1 6) ,312-24	14-17	19-23
	(3/8) .375-24	20-24	27-33
	(7/1 6) .438-20	32-37	43-50
Bearing Strap	(1/4) .250-28	13-18	18-24
	(5/1 6) .312-24	25-30	34-41
	(3/8) .375-24	45-60	61-81
Flange Bolts	(5/16) .312-24	22-26	16-35
	(3/8) .375-24	40-48	54-65
	(7/1 6) .438-20	63-75	85-102
	(1/2) .500-20	97-116	132-157

DOUBLE-CARDAN CONSTANT VELOCITY TYPE JOINT

(Light Duty)

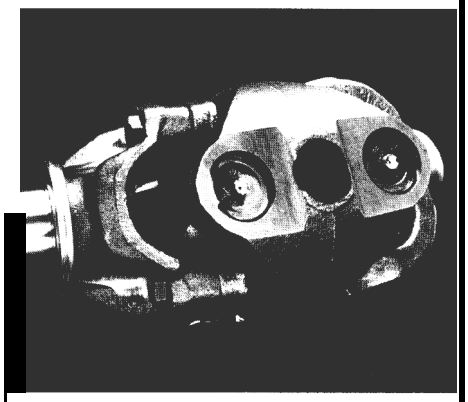

The double-cardan constant velocity (CV) type u-joint is a special design to accommodate necessary installation angles not compatible with single-cardan u-joints. The CV joint also requires special attention. Neglect is its main enemy.

The CV joints need lubrication to live. Some of the older assemblies using flush-type fittings require special lube gun fittings, such as a needle nose attachment. The crosses may or may not have lube fittings.

The centering socket and ball is critical to proper function of the CV joint and smooth operation. Without lubrication it will wear out, causing vibration and serious damage. Rebuilding the CV joint will be necessary.

LUBRICATION

The lube fitting for the centering socket in the CV joint can be difficult to reach and requires a special lube technique. It is necessary to rotate the driveshaft to a position with the flush type lube fitting in the centering socket up toward the floor board. The yokes spread or open in this position to allow access with the needle nose tip. It is still an awkward and blind procedure. That explains why neglect is so common.



WARNING: Rotating shafts can be dangerous. You can snag clothes, skin, hair, hands, etc. This can cause serious injury or death. Do not work on a shaft (with or without a guard) when the engine is running.

A more positive, less frustrating approach is to disconnect the driveshaft. The lube fitting will come into view but it may be necessary to jack one front wheel and rotate the driveshaft. This can be done to all 4WD vehicles with the double-cardan u-joint.

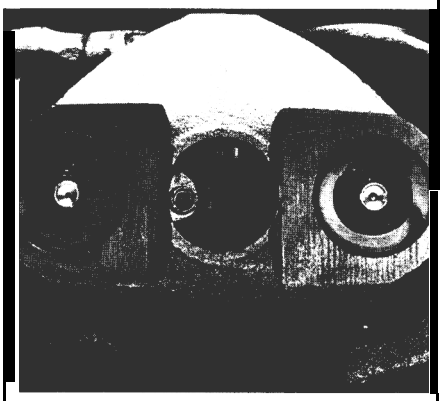

Lubrication access *hole in late-design Spicer Double Cardan Joints*

The later-design Spicer CV joints simplify lubrication by making easy access to the lube fittings. Service replacement kits have been modified with a lube fitting in one or more bearing assemblies to aid in lubrication access. Also, an access hole has been provided in the center yoke for easy lubrication of the centering ball. This new design eliminates the need to disconnect the shaft and puts the fittings in plain view.

Look for signs of u-joint trouble when lubricating u-joints:

- ✔ Lube spray from a leaky seal indicates need for u-joint replacement.
- ✔ Any looseness or noticeable “slop” at a u-joint in the driveshaft calls for immediate replacement of the u-joint, assuming the snap rings or bolts are already in place or torqued down.

SERVICING THE DRIVESHAFT

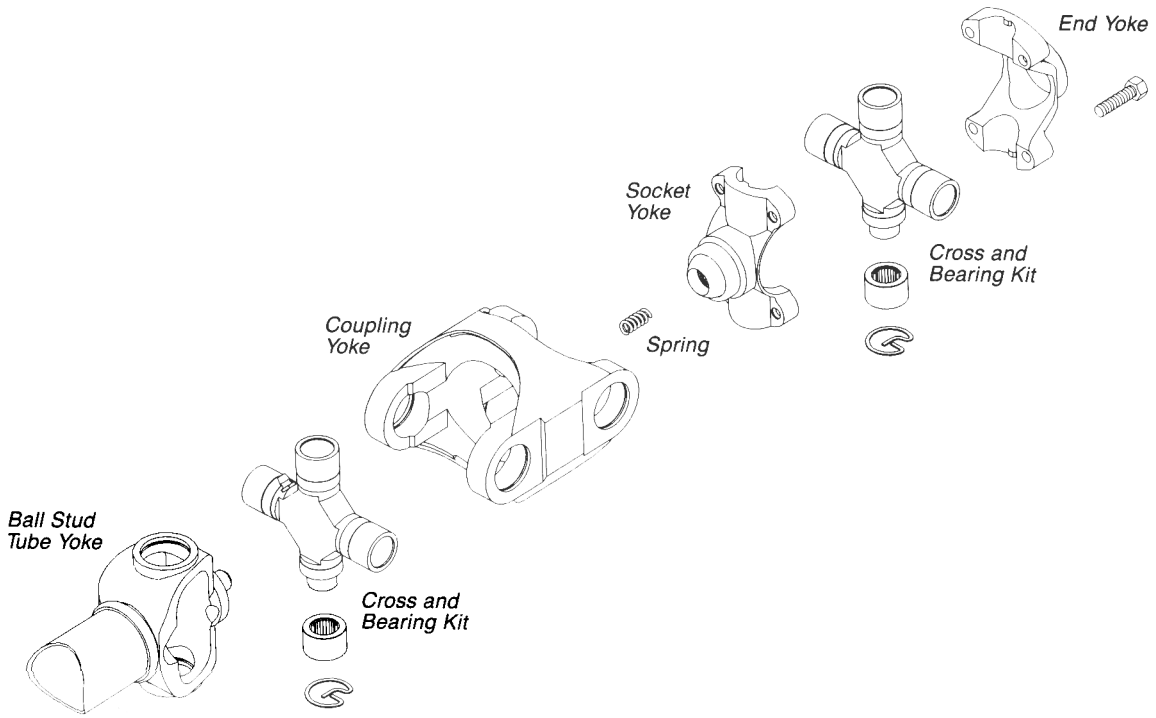

Spicer Double Cardan Constant Velocity Type Joint

SPICER STYLE REPAIR KIT

The Spicer style double cardan CV joint has outside snap rings. CV joint repairs should be made whenever inspections show any noticeable sign of loose fit, corrosion or loss/lack of lube at u-joint or centering ball.

Centering socket/ball repair kits are available from Spicer with installation instructions for replacement. The correct repair kit depends on whether the CV joint is the older or newer type. The advantage of easy access lube fittings for the new style center kit would be lost when installed in an old style u-joint. The centering kits have a different location for the lube fitting.

The disassembly and reassembly of both types is basically the same procedure. It is important that both styles be reassembled with all lube fittings

will make service lubrication more convenient and reduce the possibility of overlooking lube points.

DISASSEMBLY

1. Disconnect u-bolts or bearing straps at the single-cardan end yoke position. Disconnect cap screws from the CV end yoke or flange bolts from the CV companion flange. This will allow driveshaft removal from the vehicle.

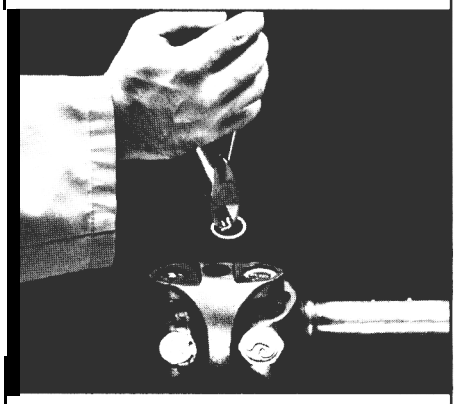

2. Remove all snap rings from the bearing assemblies.

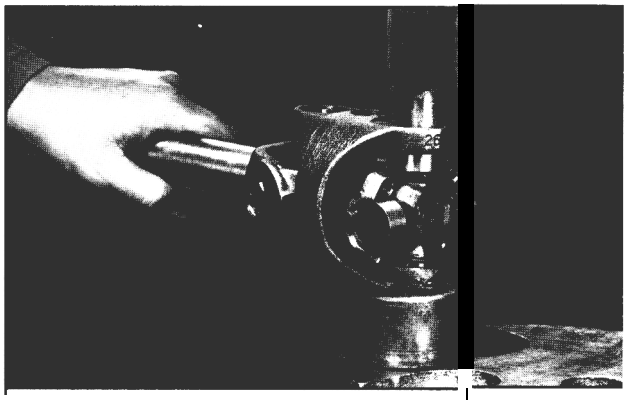

3. Press the bearing assembly partially from the outboard side of the center yoke — enough to grasp by vise jaws. Do not press the bearing assembly completely through.

NOTE: Be sure to remove lube fitting if it interferes with bearing assembly press-out.

SERVICING THE DRIVESHAFT



4. Grasp the protruding bearing assembly by vise jaws. Tap the tube yoke with a mallet and drift to dislodge the bearing assembly from the yoke hole.



5. Flip the assembly and repeat steps 3 and 4 for removing the opposite side bearing assembly. This will then allow removal of the cross centering kit assembly and spring.

6. Press the remaining bearing assemblies out on the other cross as described above to complete disassembly.

CAUTION: *Tap in the center of the "H" yoke. Never strike the yokes at the bearing assembly holes because the snap ring grooves may collapse and make reassembly impossible.*

REASSEMBLY

1. Fit a cross into the tube yoke.

2. Place a bearing assembly in a tube yoke hole and over a trunnion. Keep the needle rollers upright in the bearing assembly. A needle roller lying at the bottom of the bearing assembly will prevent proper assembly.



NOTE*: Be sure to remove the lube fitting if it interferes with bearing assembly press-up.*

3. Press the bearing assembly in place and install a snap ring.

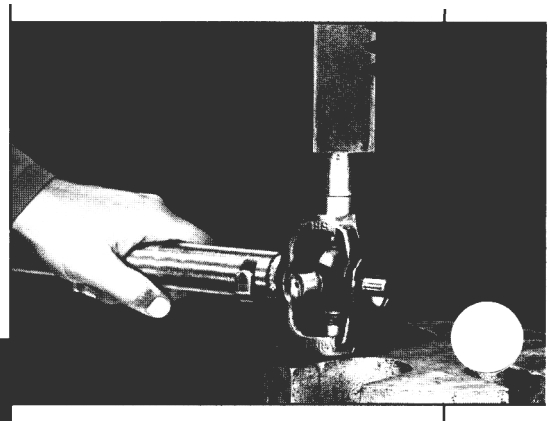

4. Flip the tube yoke and repeat bearing assembly installation on the opposite trunnion. Install a snap ring.

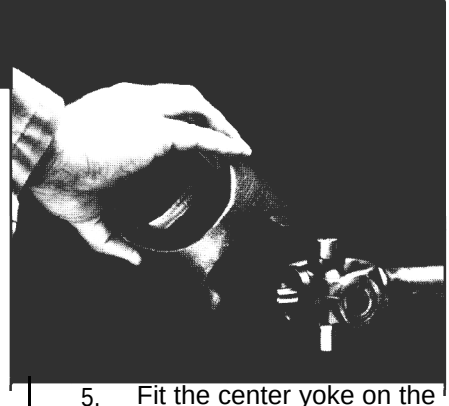

5. Fit the center yoke on the remaining two trunnions and press bearing assemblies in place, both sides. Install snap rings.

SERVICING THE DRIVESHAFT

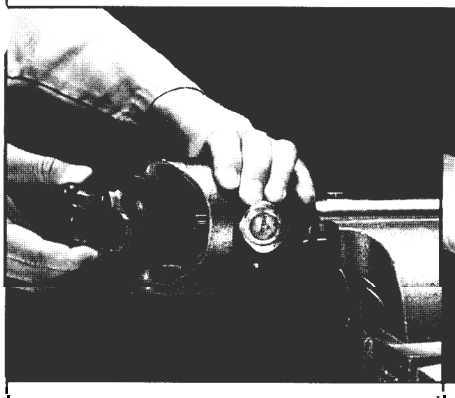

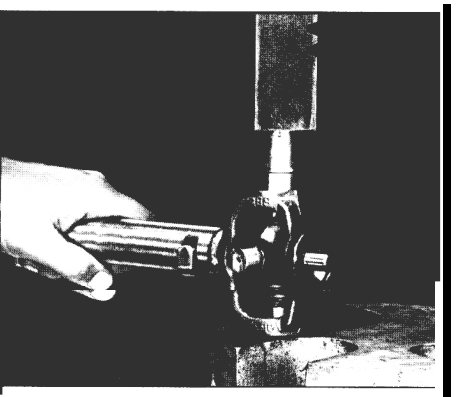

6. Next install the centering kit assembly inside the center yoke making sure the spring in the tube yoke is in place. Align the lube fitting on the centering kit assembly with the lube fitting on the installed cross.

8. Press the remaining two bearing assemblies into place and install snap rings.

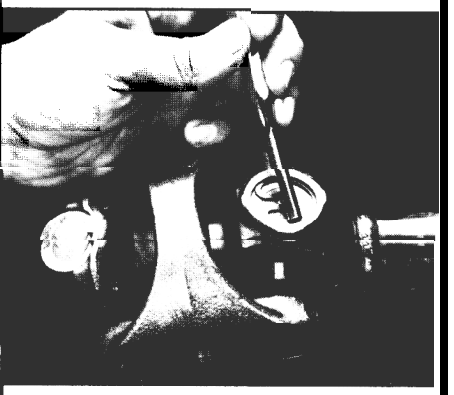

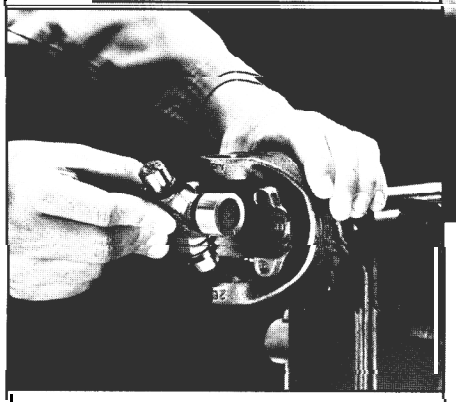

9. Tap the snap rings to allow them to set into the grooves. A bearing cup from a used u-joint works well for this.

7 Place two bearing assemblies on the remaining cross (opposite sides). Fit the open trunnions into the center yoke holes and the bearing assemblies into the centering kit assembly. Make sure the lube fitting on the cross is in line with the other two lube fittings.

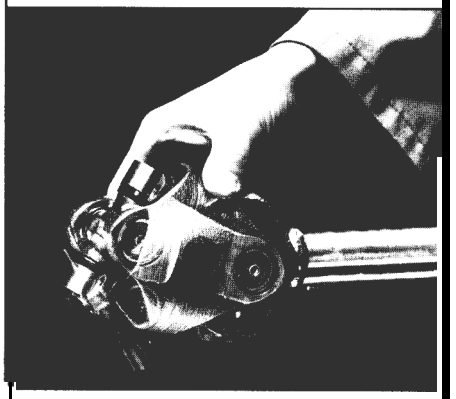

10. Check for proper assembly. Flex the CV joint beyond center. It should snap "over center" in both directions when all needle rollers and components are correctly assembled.

11. Reinstall in the vehicle.

12. Torque all bolts and cap screws to specifications shown below.

13. Add grease to all three lube fittings.

TORQUE SPECIFICATIONS FOR DOUBLE-CARDAN CONSTANT VELOCITY TYPE JOINTS

121O CV-Standard Grade Eight Bolts Bolt Torque -13-18 lb./ft. (.250-28)
1310/1330CV-Standard Grade Eight Bolts Bolt Torque -22-26 lb./ft. (.312-24)

CAUTION: *Self-locking bolts used with bearing straps should not be reused. Follow instructions implicitly to prevent danger of serious personal injury or death from loss of driveshaft function.*



WARNING: Rotating shafts can be dangerous, You can snag clothes, skin, hair, hands, etc. This can cause serious injury or death,

Do not go under the vehicle when the engine is running.

In order to avoid becoming entangled install power take-off and/or shaft behind the frame rail, tanks, battery box, etc.

If power take-off and/or shaft are still exposed after installation, install a guard.

SERVICING THE ADVANCED MATERIALS DRIVESHAFT

SERVICING THE DRIVESHAIT

Assembly and disassembly procedures for Spicer Lite™ aluminum and Spicer Graph- Lite™ driveshafts are similar to those of other driveshafts. However, some unique instructions must be followed to service advanced technology materials.

SPICER LITE™ ALUMINUM DRIVESHAFI'

Inspecting and Lubricating

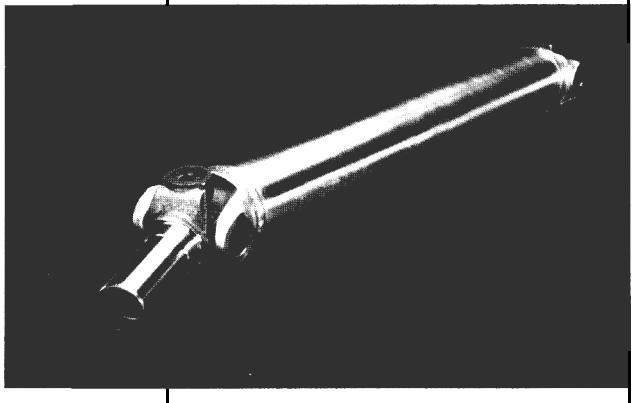

1) Inspect Spicer Lite™ aluminum driveshafts following the same procedures for steel driveshafts as outlined on pages 4-7.

2) Inspect the aluminum tubing for surface scratches and dents. These scratches may **not** exceed 0.008 inches in depth.

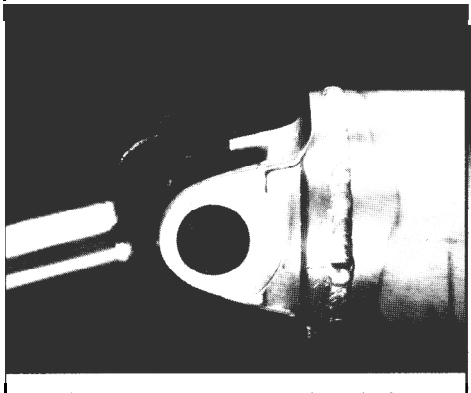

3) Visually inspect the circle welds and end fittings for any signs of cracks or signs of deterioration. If there are any cracks that exceed 0.008 inches in depth, the assembly must be replaced.

4) Check to be sure there are no missing balance weights, If balance weights are missing and a void has occurred in the aluminum tubing greater than 0.008 inches, the assembly must be replaced.

SERVICING

1) Service Spicer-Lite™ aluminum driveshafts following the same procedure for steel driveshafts as outlined on pages 13-15.

2) After removing the cross and bearings from both ends of the driveshaft, inspect the cross hole surfaces for damaged or raised metal. Raised metal can be removed with an emery cloth. The raised metal can cause premature cross and bearing problems.

CAUTION: *Aluminum is softer than steel. Care must be taken not to remove excessive material or damage cross holes.*

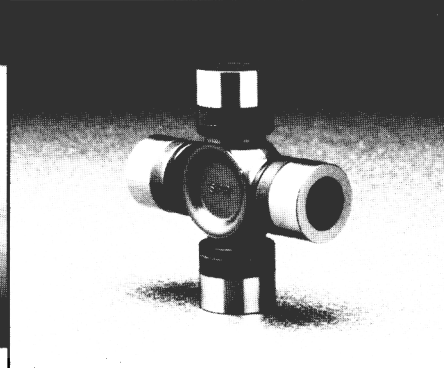

3) If the universal joint kit is replaced, it must be replaced with a kit designed specifically for use with aluminum. The use of non-endurion coated kits will result in damage to the driveshaft through galvanic corrosion.

CAUTION: *When replacing universal joint kits in aluminum driveshafts, use kits designed specifically for aluminum to avoid galvanic corrosion.*

Straightening and Balancing

1) Our Spicer Lite™ aluminum driveshaft can be straightened following the same procedure for steel driveshafts as outlined on page 24.

GRAPH-LITE™ DRIVESHAFTS

Inspecting and Lubricating

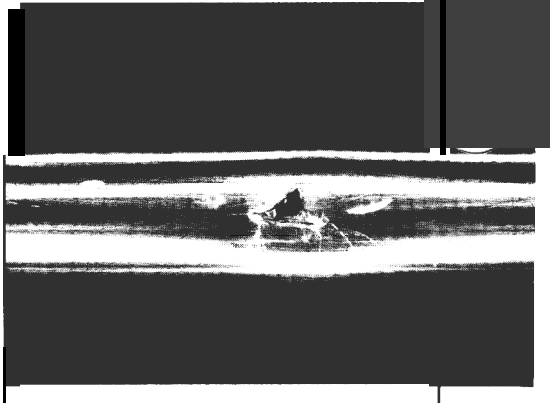

1) Inspect driveshaft for any surface imperfections in the black graphite covering. Look for torn graphite near the ends of the covering and surface scratches or cracks deeper than 0.008 inches along the length of the covering. If any imperfections such as these exist, the assembly must be replaced. The black graphite must be securely attached to the aluminum tubing in all areas. If there is any relative movement between the two materials (aluminum and carbon graphite), the assembly must be replaced.

SERVICING THE ADVANCED MATERIALS DRIVESHAFT

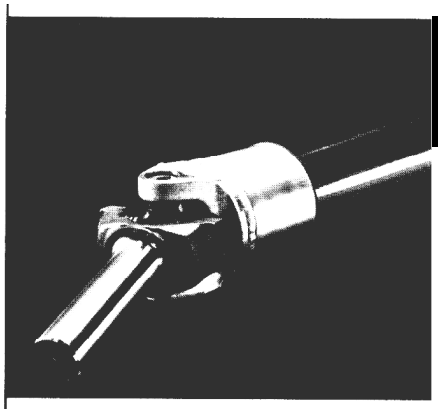

2) Inspect the driveshaft following the same procedures for steel driveshafts as outlined on pages 4-7.

3) Inspect the aluminum tubing for surface scratches and dents deeper than 0.008 inches.



4) Visually inspect the circle welds and end fittings for any signs of cracks or deterioration. If there are any cracks that exceed 0.008 inches in depth, the assembly must be replaced.

5) Check for any missing balance weights. If balance weights are missing, and a void has occurred in the aluminum tubing greater than 0.008 inches, the assembly must be replaced.

Servicing

1) Service Spicer Graph-Lite™ driveshafts following the same procedure for steel driveshafts outlined on pages 13-15.

2) After removing the cross and bearings from both ends of the driveshaft, inspect the cross hole surfaces for damaged or raised metal. Raised metal can be removed with an emery cloth. The raised metal can cause premature cross and bearing problems.

CAUTION: *Aluminum is softer than steel. Care must be taken not to remove excessive material or damage cross holes.*

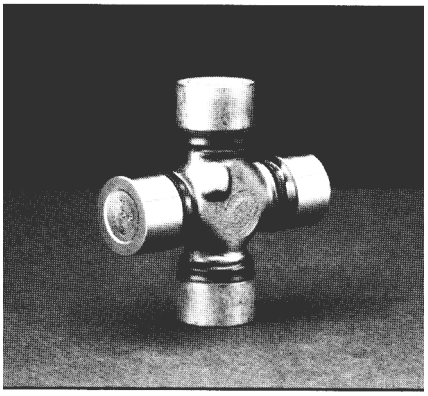

3) If the universal joint kit is replaced, it must be replaced with a kit designed specifically for use with aluminum. The use of non-endurion coated kits will result in damage to the driveshaft through galvanic **corrosion.**

CAUTION: *When replacing universal joint kits in Graph-Life ™ driveshafts, use kits designed specifically for aluminum to avoid galvanic corrosion.*

Straightening and Balancing

DO NOT, UNDER ANY CIRCUMSTANCES, ATTEMPT TO STRAIGHTEN ALUMINUM GRAPHITE DRIVESHAFTS. Any attempt to do this will cause damage to the carbon graphite covering resulting in decreased performance of the driveshaft. The entire driveshaft assembly must be replaced if the tubing is bent or twisted.



WARNING: Rotating shafts can be dangerous. You can snag clothes, skin, hair, hands, etc. This can cause serious injury or death.

Do not go under the vehicle when the engine is running.

Do not work on a shaft (with or without a guard) when the engine is running.

Do not engage or disengage driven equipment by hand from under the vehicle when the engine is running,

In order to avoid becoming entangled, install the power take-off and/or shaft behind the frame rail, tanks, battery box, etc.

If power take-off and/or shaft are still exposed after installation, install a guard.

Install a support strap when servicing a driveshaft to prevent personal injury.

A serious or fatal injury can occur ...

- ▲ if you lack proper training
- ▲ if you fail to follow proper procedures
- ▲ if you do not use proper tools and safety equipment
- ▲ if you assemble driveline components improperly
- ▲ if you use incompatible driveline components
- ▲ if you use worn-out or damaged driveline components
- ▲ if you use driveline components in a non-approved application

This manual contains detailed safety instructions. Read, understand and follow this manual.

- ▲ Get proper training
- ▲ Learn and follow safe operating procedures
- ▲ Use proper tools and safety equipment
- ▲ Use proper components in good condition

STRAIGHTENING AND BALANCING ANGLES AND PHASING

STRAIGHTENING AND BALANCING THE DRIVESHAFT

(Excluding Aluminum)

The rebuilding of a driveshaft assembly usually consists of replacing worn cross and bearing assemblies with a new kit. These kits replace the part of a driveshaft most subject to wear in operation. The potential off-center condition present in the cross and bearing assemblies makes it desirable to balance every assembly after installing new cross and bearing kits.

When the tubing is bent or twisted or the tube fittings are distorted, it will be necessary to replace the damaged parts.

Properly assemble the new components into the tube and straighten the shaft assembly before tack welding, to be sure the parts are on center. This can be done by mounting the complete assembly in the appropriate tooling and straightening until the ends of the tube run concentric within 0.005 T.I.R. Recheck for runout.

RUNOUT VERSUS OVALITY

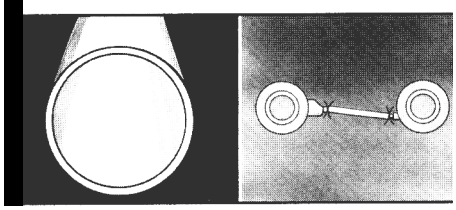

Runout-circular diameter, bent tubing

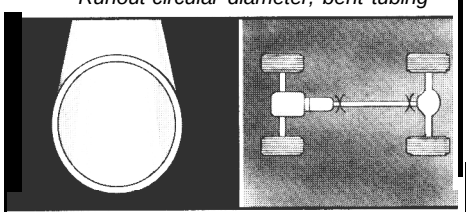

Ovality-oval diameter straight tubing

When checking for runout, it is important to distinguish between runout and ovality. Runout is when the tube is slightly bent but still maintains its circularity throughout the tube. During dynamic balancing, a dial indicator will show runout ONCE per revolution.

Ovality occurs when the tube is not circular but oval in shape. During dynamic balancing, a dial indicator will display ovality TWICE per revolution. Even though a tube may be straight, ovality will make it seem bent. A tube with ovality may be used up to a 0.010 T.I.R. runout reading. Beyond this limit the tube must be discarded for driveshaft purposes.

After welding, the entire driveshaft shouid be straightened to the following limits:

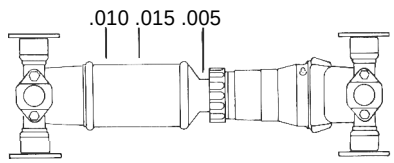

Heavy Duty Driveshaft Runout Limits

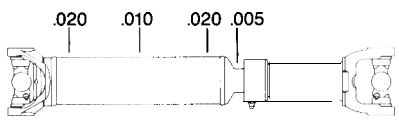

Light and Medium Duty Driveshaft Runout Limits for Unbalanced Driveshaft

Heavy Duty

0.005 T.I.R. on the neck of the slip tube shaft
0.010 T.I.R. on ends of tubing 3“ from welds
0.015 T.I.R. at linear center of the tube

Light and Medium Duty

0.005 T.I.R. on the neck of the slip tube shaft
0.010 T.I.R. on ends of tubing 3“ from welds
0.015 T.I.R. at linear center of the tube
0.015 T.I.R. for full length of tube with 30” or less

(T.I.R. – Total Indicator Reading)

These runouts should be taken with entire driveshaft assembly mounted on master tooling which locates on the outboard bearing assemblies of the u-joint kit (light and medium duty), or the trunnions of the outboard u-joint kit (heavy duty) or on selected flange yokes or yokes.

All flange yokes or yokes should be selected for dynamic balance to eliminate as much unbalance as possible. During balancing, the driveshaft again should be mounted on the same master tooling or selected flanges or yokes.

After straightening, balance the entire assembly to Original Equipment Manufacturer specifications.

ANGLES AND PHASING

(All Types)

Proper driveshaft angles and correct phasing of the yokes are very important in maintaining long life and quiet running shafts.

When in phase, the slip yoke lugs (ears) and tube yoke lugs (ears) are in line. Normally, this is the ideal condition and gives the smoothest running shaft. There may be an alignment arrow stamped on the slip yoke and on the tube shaft to assure proper phasing when assembling these components. If there are no alignment marks, they should be added before disassembly of the shaft to assure proper reassembly.

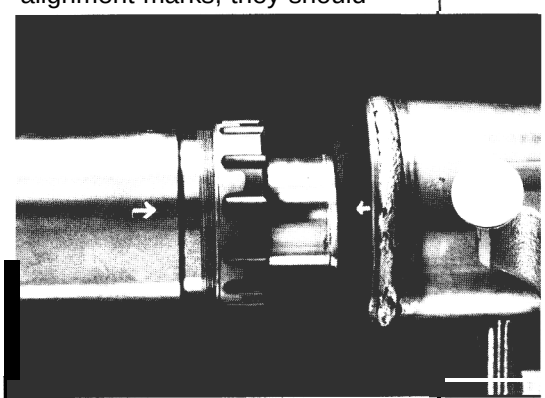

An” In Phase” Driveshaft

Phasing is relatively simple on a two-joint set . . . be sure that the slip yoke lugs and the tube yoke lugs-are in line. Driveshaft angles are a little more complicated.

SPICER® LIFE™ DRIVELINE COMPONENTS

COMPANION FLANGE (1)

(2 STYLES)

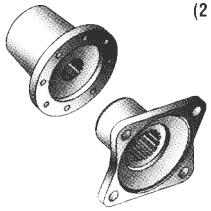

FLANGE YOKE (2)

(2 STYLES)

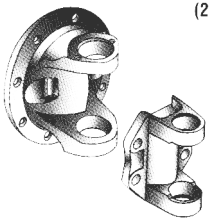

SLIP YOKE ASSEMBLY (3)

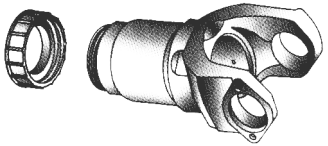

END YOKE (4)

(3 STYLES)

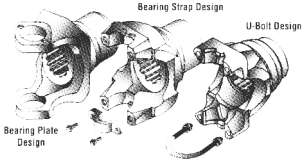

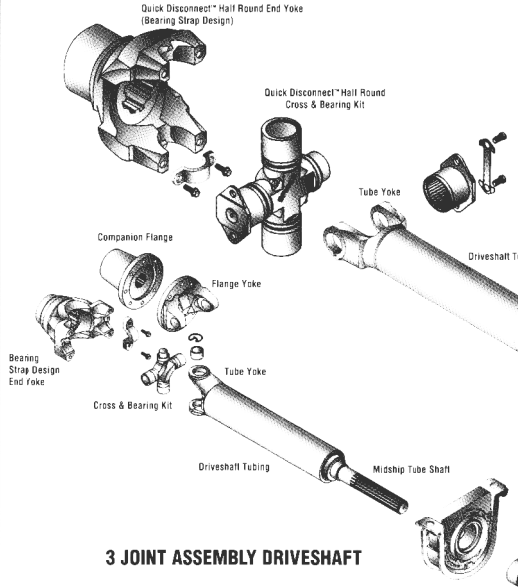

2 JOINT ASSEMBLY DRIVESHAFT

3 JOINT ASSEMBLY DRIVESHAFT

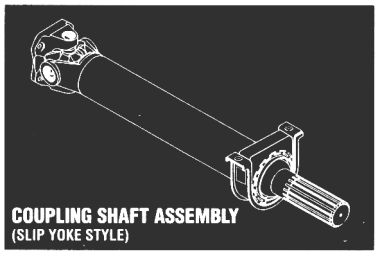

COUPLING SHAFT ASSEMBLY (SLIP YOKE STYLE)

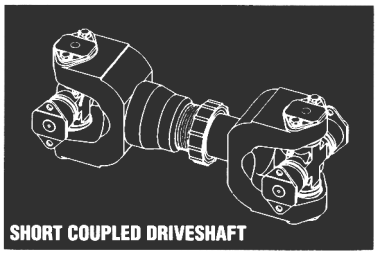

SHORT COUPLED DRIVESHAFT

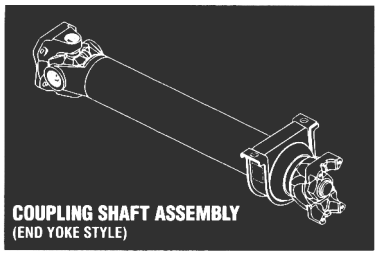

COUPLING SHAFT ASSEMBLY (END YOKE STYLE)



Warning: Rotating shafts can be dangerous. You can snag clothes, skin, hair, hands, etc. This can cause a serious injury or death. Do not work on a shaft (with or without a guard) when the engine is running.

1994 Dana Corporation Printed in U.S.A.

Dana Corporation
Spicer Universal Joint Division
P.O. Box 955
Toledo, Ohio 43697-0955

SPICER®

DANA

Bulletin J3211-2

TUBING (30 or 32)

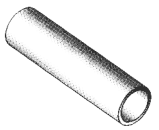

TUBE SHAFT (40-42)

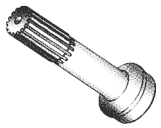

MIDSHIP TUBE SHAFT (53-57)

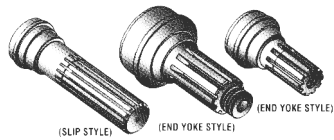

SERRATED BOLTS w/LOCK PATCH (73)



LOCK STRAP (98)



U-BOLT ASSEMBLY (94)



SOCKET YOKE (83)



DUST CAP & WASHER KIT (VARIABLE PART NO.)

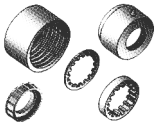

STRAP OR CAP & BOLT ASSEMBLY (70)

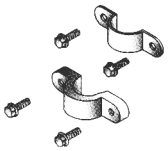

JOURNAL & BEARING KIT

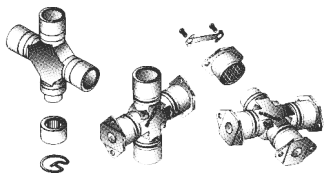

TUBE YOKE w/TUBE (27)

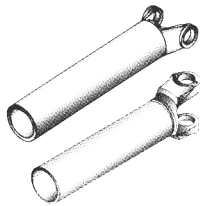

TUBE YOKE (28)

(2 STYLES)

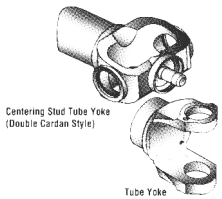

YOKE SHAFT (82)

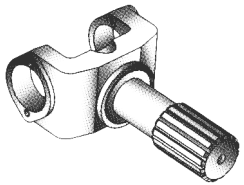

CENTER YOKE (26)

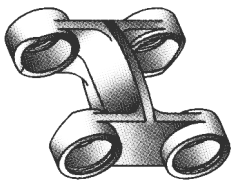

SHAFT SUPPORT BEARING ASSEMBLY

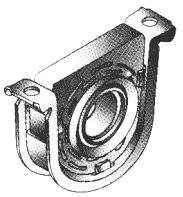

SECTION 10: FRONT AXLE

CONTENTS

1. FRONT AXLE....10-2
    1.1 Description....10-2
2. LUBRICATION....10-2
3. MAINTENANCE....10-2
4. REMOVAL AND REPLACEMENT....10-2
    4.1 Removal....10-2
    4.2 Replacement....10-3
5. SERVICE INSTRUCTION FOR STEER AXLE....10-3
6. FRONT WHEEL ALIGNMENT....10-3
    6.1 Minor front Wheel Alignment....10-3
    6.2 Major Front Wheel Alignment....10-4
    6.3 Inspection Before Alignment....10-4
    6.4 Turning Angle Adjustment....10-4
    6.5 Mechanical Stop....10-4
        6.5.1 R.H. Turn Adjustment....10-5
        6.5.2 L.H. Turn Adjustment....10-5
    6.6 Hydraulic Stop....10-5
    6.7 Front Wheel Camber....10-6
        6.7.1 Camber Check....10-6
    6.8 Front Axle Caster....10-7
    6.9 Front Wheel Toe-in....10-7
        6.9.1 Inspection and Adjustment....10-8
7. TROUBLESHOOTING....10-9
8. SPECIFICATIONS....10-10

LIST OF ILLUSTRATIONS

FIG. 1: CAMBER....10-6
FIG. 2: CASTER....10-7
FIG. 3: TOE-IN....10-7
FIG. 4: AIR BELLOWS MOUNTING SUPPORT AND AXLE....10-10
FIG. 5: DEFLECTION VERSUS APPLIED LOAD....10-11

1. FRONT AXLE

1.1 Description

All H3 vehicles have a front axle of the "Reverse Elliot" type manufactured by GKN. The front axle consists of a girder section axle bed or beam with stub axles. Each stub axle is carried on a taper king pin, with a steep angle taper roller bearing at its top and a plain phosphor bronze bush at the bottom. The hub taper roller bearings are of a generous size and they are adjusted by means of shims, and secured by a special nut and washer. Brakes are manufactured by KNORR-BREMSE. Steering ball joints with hardened balls and rubbing pads incorporate compression springs which automatically take up any wear.

The tie rod simplifies toe-in adjustment. The maximum turning angle is set through stop screws installed on the inner side of the knuckle.

Steering stabilizer (damper), hydraulic cylinder and steering drag link which are mounted on the front axles are described in Section 14, "Steering" of this manual.

2. LUBRICATION

Perform periodic lubrication. Lubrication points of the front axles are shown on the lubrication and servicing chart annexed to Section 24, "Lubrication". Grease fittings such as the tie rod ends and knuckle pins are provided with grease fittings for pressure lubrication. These grease fittings should be serviced every 6,250 miles
(10 000 km) or twice a year whichever comes first. Good quality lithium-base grease NLGI No. 1 and 2 are recommended.

3. MAINTENANCE

A periodic inspection of the front axle assembly should be made to check that all bolts are tight, and that no damage and distortion have taken place. Suspension support stud nuts, U-bolt nuts, tie rod arms, steering arm nuts, and stop screws should be checked and tightened, if necessary, to the torque specifications given at the end of this section. Also check the condition of the steering knuckle pins and bushings. In case of excessive looseness, the bushings and pins should be replaced.

Any looseness in the steering linkage under normal steering loads is a sufficient cause to immediately check all pivot pins for wear, regardless of accumulated mileage. Steering linkage pivot points should be checked each time the axle assemblies are lubricated. Looseness in the steering linkage pivot points can be visually detected during rotation of the steering wheel.

Steering knuckles, knuckle pins, and bushings may be replaced without removing the axle from the vehicle. However, if extensive overall work of the front axle is necessary, the axle should be removed.

4. REMOVAL AND REPLACEMENT

The following procedure deals with the removal of the front axle assembly. The method used to support the axle and suspension components during removal and disassembly depends upon local conditions and available equipment.

4.1 Removal

1. Raise the vehicle by its jacking points on the body (see Section 18, "Body" under heading, "16. VEHICLE JACKING POINTS") until vehicle body is approximately 20 inches (508 mm) from the floor. Place jack stands under frame. Remove the wheels (if required, refer to Section 13, "Wheels, Hub and Tires" under heading, "3.1 REMOVAL").

2. Exhaust compressed air from the air supply system by opening the drain valve of each air reservoir.

3. Install jacks under axle jacking points to support the axle weight.

Warning: *To help prevent personal injury caused by the axle rolling off the jacks, the jack lifts should be equipped with U-adaptors, or similar equipment.*

4. Disconnect the steering drag link from the steering arm.

5. Remove the ABS sensors from their location in the hub units (if vehicle is so equipped).

6. Disconnect the height control valve link from its support on the axle.

7. Disconnect the hoses from brake chambers.

Note: *Position the air lines so that they will not be damaged when removing the axle.*

8. Remove the steering stabilizer cylinder (damper) and the hydraulic cylinder from steering top lever.

9. Remove bolts and nuts fixing the steering (damper) and the hydraulic cylinder mounting support to the front axle.

10. Remove the bolts and nuts fixing the axle to the left-hand and right-hand side air bellows mounting supports.

11. Use the jacks to lower axle. Carefully pull away the jacks and axle assembly from under the vehicle.

4.2 Replacement

Reverse removal procedure to reinstall the axle. Make sure that the air bellows support mounting plates are clean.

Note: *Refer to Section 16, "Suspension", Section 14, "Steering" and to paragraph "6. SPECIFICATIONS" at the end of this section for proper torque tightening.*

5. SERVICE INSTRUCTIONS FOR STEER AXLE

Refer to GKN Parts and service manual for axles annexed to the end of this section. See Section B.

6. FRONT WHEEL ALIGNMENT

Correct front wheel alignment must be maintained for ease of steering and satisfactory tire life. Road shocks, vibrations, normal stress and strains on the front-end system under average operation can result in loss of front wheel alignment.

Check the front wheel alignment when the following occurs:

1. Every 200,000 miles (320 000 km) or 24 months (normal maintenance);

2. When the vehicle does not steer correctly; or

3. To correct a tire wear condition.

There are two types of front wheel alignments: a minor alignment and a major alignment.

6.1 Minor Front Wheel Alignment

Perform a minor front wheel alignment for all normal maintenance conditions.

Perform the minor front wheel alignment in the following sequence:

1. Inspect all the systems that affect the wheel alignment. See paragraph "6.3 INSPECTION BEFORE ALIGNMENT" in this section.

2. Check and adjust the hub bearings, See Section 13, "Wheels, Hubs and Tires", under heading "11.1.5 TO ASSEMBLE THE HUB".

3. Check and adjust the toe-in.

6.2 Major Front Wheel Alignment

Perform a major front wheel alignment to correct steering and tire wear conditions.

Perform the major front wheel alignment in the following sequence:

1. Inspect all the systems that affect the wheel alignment. See paragraph"6.3 INSPECTION BEFORE ALIGNMENT" in this section.

2. Check and adjust the hub bearings. See Section 13, "Wheels, Hubs and Tires", under heading "11.1.5 TO ASSEMBLE THE HUB".

***Note**: If steering angle stoppers are changed, a special procedure is required for readjusting gearbox poppet valves. (see paragraph "6.6 HYDRAULIC STOP" of this section).*

3. Check and adjust the turning angle adjustment.

4. Check the camber angle.

5. Check and adjust the caster angle.

6. Check and adjust the toe-in.

6.3 Inspection Before Alignment

Check the following before doing a front wheel alignment:

1. Ensure that the vehicle is at normal ride height (see Section 16, "Suspension" under heading "7. SUSPENSION HEIGHT ADJUSTMENT").

2. Ensure that front wheels are not the cause of the problem (refer to Section 13, "Wheels, Hubs and Tires"). Inspect the tires for wear patterns that indicate suspension damage or misalignment.

a. Make sure the tires are inflated to the specified pressure.

b. Make sure the front tires are the same size and type.

c. Make sure the wheels are balanced.

d. Check wheel installation and straightness.

3. Check the wheel bearing adjustment.

4. Check steering linkage for bending and pivot points for looseness.

5. Check knuckle pins for evidence of excessive wear.

6. Check radius rods for bending and rubber bushings for evidence of excessive wear.

7. Make sure all fasteners are tightened to the specified torque. Use a torque wrench to check the torque in a tightening direction. As soon as the fastener starts to move, record the torque. Correct if necessary. Replace any worn or damaged fasteners.

6.4 Turning Angle Adjustment

The maximum turning angle is set through the two steering stop screws installed on the axle center. The turning angle is factory adjusted to accommodate the chassis design, and therefore, does not require adjustment on new vehicles. However, these should be checked and adjusted, if necessary, any time any component of the steering system is repaired, disassembled or adjusted.

Proceed with the following method to check steering maximum turn angle.

6.5 Mechanical Stop

Check if front tires rub against the frame or if the steering gear has been serviced.

6.5.1 R.H. Turn Adjustment

1. Turn steering wheel to the right until the boss on the axle touches the right stop screw.

2. Verify the nearest point of contact of the ball socket body with the air bellows support assembly. Measure the distance between those two points.

3. The distance between these two points should be approximately 1/8 inch (3 mm). If not, the steering stop screws must be readjusted.

4. Check the nearest point of contact of the drag link with the tire. Measure the distance between these two points.

5. The distance should be 1 inch (25 mm) or more. If not, the steering stop screws must be readjusted.

6. This must be done for a full right turn.

7. If readjustment is required:

   a. Remove the swivel stop screw.

   b. Add to the stop screw the required number of washers to obtain the proper measure. Tighten the stop screw afterwards. Two washer thicknesses are available: 1/16 inch and 3/16 inch spacers.

6.5.2 L.H. Turn Adjustment

1. Turn steering wheel to the left until the boss on the axle touches the left stop screw.

2. Verify the nearest point of contact of the ball socket body with the air bellows support assembly. Measure the distance between these two points.

3. The distance should be approximately 1/8 inch (3 mm). If not, the steering stop screws must be readjusted.

4. Check the stroke of the steering stabilizer cylinder (damper). It should not exceed 12.59 inches (320 mm).

5. This must be done for a full left turn.

6. If readjustment is required:

   a. Remove the swivel stop screw.

   b. Add to the stop screw the required number of washers to obtain the proper measure. Tighten the stop screw afterwards. Two washer thicknesses are available: 1/16 inch and 3/16 inch spacers.

Note: *If steering angle stoppers are changed, a special procedure is required for readjusting gearbox poppet valves (see paragraph "6.6 HYDRAULIC STOP" of this section).*

6.6 Hydraulic Stop

Note: *Before poppet valve readjustment, verify vehicle wheel alignment, and ensure that oil level is checked and that air bleeding is done.*

Refer to "TAS Steering Gear Service Manual" annexed to Section 14, "Steering", under headings: "FILLING AND AIR BLEEDING THE SYSTEM" and "POPPET READJUSTMENT".

6.7 Front Wheel Camber

Wheel camber is the number of degrees the top of the wheel tilts outward (positive) or inward (negative) from a vertical plane (Fig.1).

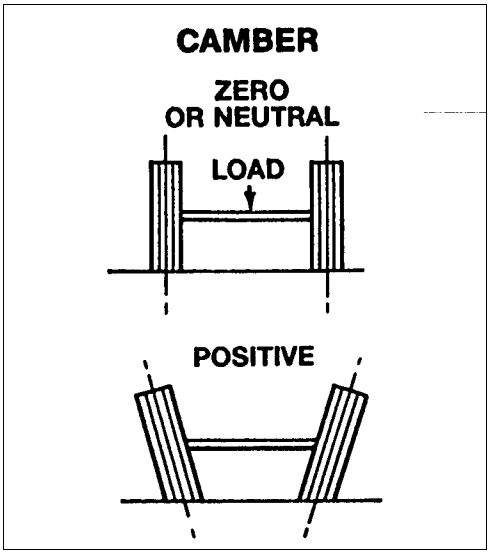

FIGURE 1: CAMBER 10006

The camber angle is not adjustable. Camber variations may be caused by wear at the wheel bearings, steering knuckle pins, or by a bent knuckle or sagging axle center. Steering effort is affected by improper camber, and uneven tire wear will result. Excessive positive camber causes an irregular wear of tire at the outer shoulder, and excessive negative camber causes wear at the inner shoulder.

6.7.1 Camber Check

For camber specifications, refer to paragraph "8. SPECIFICATIONS" in this section.

***Note**: Camber angle varies with axle loading. If the vehicle is not completely empty, please refer to the camber angle curve in the specifications at the end of this section .*

1. Use an alignment machine to check the camber angle.

2. If camber reading is not in the specifications, adjust the wheel bearings and repeat the check. If the reading is still not within specifications, verify the steering knuckle pins and axle center.

   See instructions in "GKN Parts and Service Manual For Axles", annexed to the end of this section, under heading "TO REMOVE THE STUB AXLE ASSEMBLY" .

3. Check the wheel lateral distortion as instructed in Section 13, "Wheels, Hubs and Tires", under heading "6. CHECKING FOR DISTORDED WHEEL ON VEHICLE". If distortion is excessive, straighten or replace wheel(s).

6.8 Front Axle Caster

For caster specifications, refer to paragraph "8. SPECIFICATIONS" in this section.

Positive caster is the rearward tilt from the vertical axis of the knuckle pin. Negative caster is the forward tilt from the vertical axis of the knuckle pin (Fig. 2). This vehicle is designed with a positive caster. The purpose of the caster angle is to give a trailing effect. This results in stabilized steering and a tendency for the wheels to return to the straight-ahead position after taking a turn.

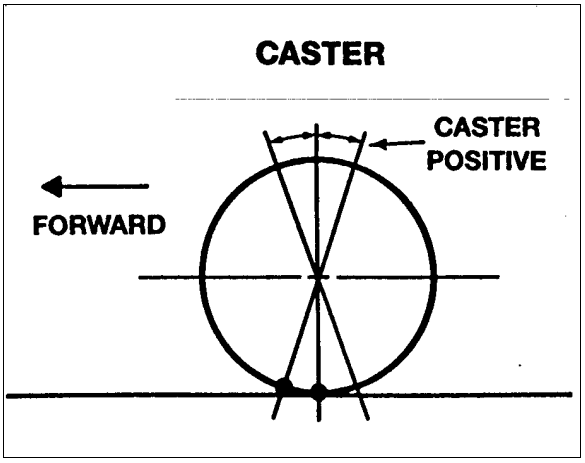

FIGURE 2: CASTER **10007**

Excessive caster results in hard steering around corners. A shimmy may also develop when returning to the straight-ahead position (pulling out of curves).

Insufficient caster will cause wandering and steering instability. Caster variations may be caused by a bent axle, tilting or distortion of the side suspension supports, damaged radius rod bushings, or unequal tightening of the front and rear suspension support bolts. Incorrect caster must be corrected by replacing the damaged suspension parts. A precision instrument should be used to measure the caster.

Note: *The caster of this vehicle is factory set and is nonadjustable. However, if after replacing damaged parts on the vehicle or in case of improper caster due to irregular setting, the front axle caster can be adjusted by means of shims (Prévost # 110663) on the left-hand side upper radius rod support in order to obtain minor adjustment.*

6.9 Front Wheel Toe-in

Wheel toe-in is the degree (usually expressed in fractions of an inch) to which the forward part of the vehicle front wheels are closer together than the rear part, measured at wheel centerline height with the wheels in the normal *"straight-ahead"* position of the steering gear. Incorrect toe-in results in excessive tire wear caused by side slippage and also steering instability with a tendency to wander. Toe-in may be measured from the center of tire treads or from the inside of the tires. Take measurements at both front and rear of axle (see "A" and "B" in Fig. 3).

When setting *"toe-in"* adjustment, the front suspension must be neutralized; that is, all component parts must be in the same relative position when making the adjustment as they will be when in operation.

To neutralize the suspension, the vehicle must be rolled forward, approximately ten feet.

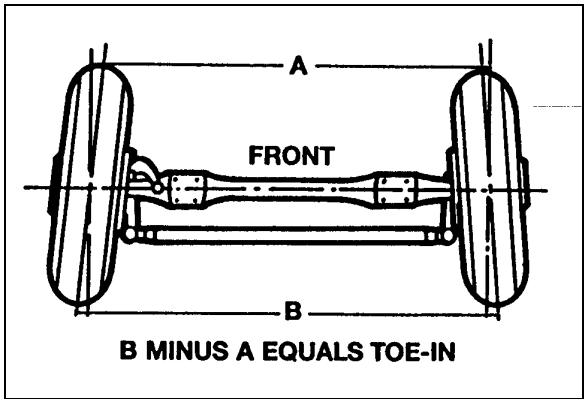

FIGURE 3: TOE-IN **..... 10008**

For toe-in specifications, refer to paragraph "8. SPECIFICATIONS" in this section.

By rolling the vehicle forward, all tolerances in the front suspension are taken up and the suspension is then in its normal operating position. Neutralizing the front suspension is extremely important, especially if the vehicle has been jacked up in order to mark the tires. Otherwise the front wheels will not return to their normal operating position due to the tires gripping the floor surface when the vehicle jack is lowered.

Note: *"Toe-in" measurements must be taken at the horizontal axis of the wheel centerline.*

6.9.1 Inspection and Adjustment

Before checking front wheel toe-in, first check the camber angles and make the necessary corrections.

1. Measure the toe-in.

2. If the toe measurement is not at the specified distance, Refer to the following procedure:

a. Loosen the pinch bolt nuts and bolts on each end of the tie rod.

b. Turn the tie rod until the specified toe-in distance is obtained.

c. Tighten pinch bolt nuts alternately and progressively to 65-75 lbf•ft (88-102 N•m), thus securing all joint to tie rod.

7. TROUBLE SHOOTING

Condition	Cause	Correction
Tires wear out quickly or have uneven tire tread wear.	1. Tires have incorrect air pressure. 2. Tires out-of-balance. 3. Incorrect tag axle alignment. 4. Incorrect toe-in setting. 5. Incorrect steering arm geometry.	1. Put specified air pressure in tires. 2. Balance or replace tires. 3. Align tag axle. 4. Adjust toe-in specified setting. 5. Service steering system as necessary.
Vehicle is hard to steer.	1. Low pressure in the power steering system. 2. Steering gear not assembled correctly. 3. Steering linkage needs lubrication. 4. King pins binding. 5. Incorrect steering arm geometry. 6. Caster improperly adjusted. 7. Tie rod ends hard to move. 8. Worn thrust bearing.	1. Repair power steering system. 2. Assemble steering gear correctly. 3. Lubricate steering linkage. 4. Replace king pins. 5. Service steering system as necessary. 6. Adjust caster as necessary. 7. Replace tie rod ends. 8. Replace thrust bearing.
Bent or broken steering arm, steering top lever, tie rod assembly	1. Too much pressure in the power steering system. 2. Cut-off pressure of the power steering system improperly adjusted. 3. Vehicle not powered on correctly. 4. Power steering system not installed correctly.	1. Adjust power steering system to specified pressure. 2. Make sure vehicle is powered on correctly. 3. Correctly install the power steering system. 4. Correctly install power steering system
Worn or broken steering ball stud.	1. Drag link fasteners tightened past specified torque. 2. Lack of lubrication or incorrect lubricant. 3. Power steering stops improperly adjusted.	1. Tighten drag link fasteners to specified torque. 2. Lubricate linkage with specified lubricant. 3. Adjust stops to specified dimension.
Worn king pins and knuckle bushings.	1. Worn or missing seals and gaskets. 2. Incorrect lubricant. 3. Axle not lubricated at scheduled frequency. 4. Incorrect lubrication procedures. 5. Lubrication schedule does not match operating conditions.	1. Replace seals and gaskets. 2. Lubricate axle with specified lubricant. 3. Lubricate axle at scheduled frequency. 4. Use correct lubrication schedule to match operating conditions. 5. Change lubrication schedule to match operating conditions.
Vibration or shimmy of front axle during operation.	1. Caster not adjusted properly. 2. Wheels and/or tires out-of-balance. 3. Worn steering stabilizer cylinder.	1. Adjust caster. 2. Balance or replace wheels and/or tires. 3. Replace steering stabilizer cylinder.

8. SPECIFICATIONS

Front Axle

Make ..... GKN
Axle type S-82
Front track ..... 84.4 inches / 2145 mm
Capacity (each) ..... 18,067 lbs / 8 200 kg

Torque Specifications

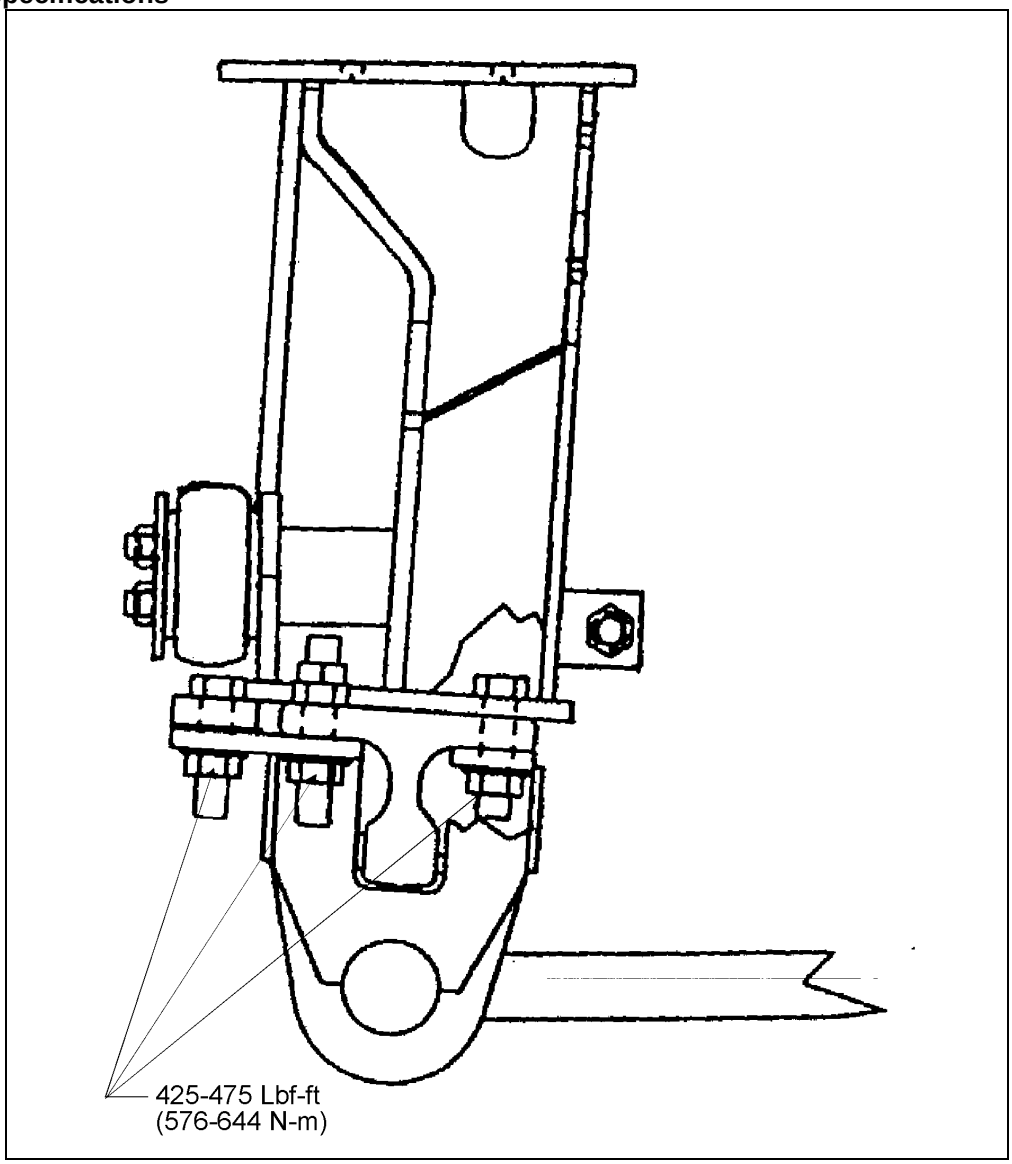

FIGURE 4: AIR BELLOWS MOUNTING SUPPORT AND AXLE 10009

For more torque specifications, see "GKN Parts and Service Manual For Axles", Manual No. 1604, Issue A, Section B annexed to the end of this section, under heading "Tightening Torque Table for Type S82 Steer Axle" .

Front wheel alignment specifications			
Front wheel alignment	**Minimal**	**Nominal**	**Maximal**
Camber (C), degrees R.H. and L.H. *	-1/2	0	+1/2
Caster (G), degrees R.H. and L.H.	+ 2	+ 2 3/4	+ 3 1/2
Toe-in (F minus E), inches	+ 1/16	+ 3/32	+ 1/8

Note: *Camber angle changes with loading. The given numbers are for an empty vehicle. See chart below for possible correction, if loaded.*

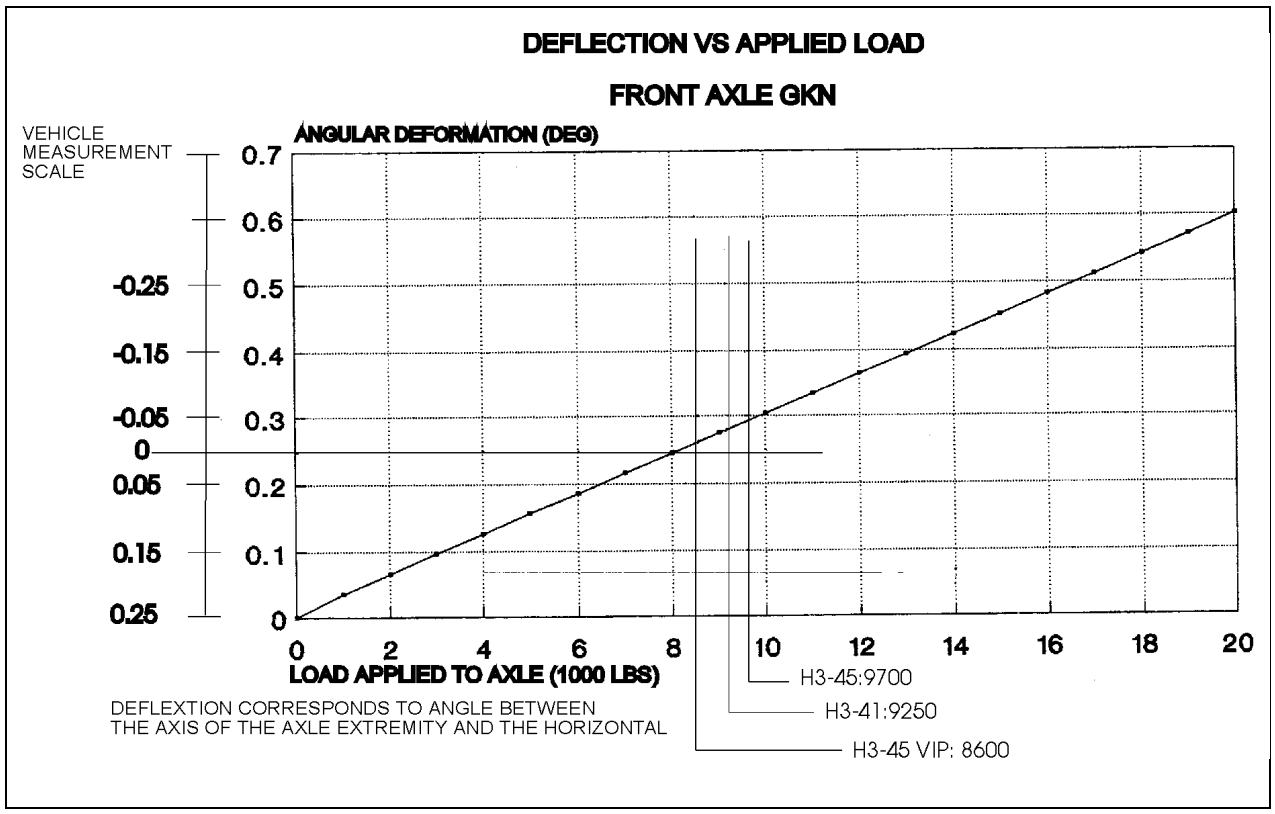

FIGURE 5: DEFLECTION VERSUS APPLIED LOAD **10010**

PARTS AND SERVICE MANUAL
FOR AXLES FITTED
TO PREVOST 6 X 2 COACH

1st. AXLE TYPE S82
AXLE ASSEMBLY No.25546
CUST. REF. 610985

REF. DRAWING *Nos.*
Hub F4651 A
Instl F4651 E

2nd AXLE TYPE TS5
AXLE ASSEMBLY *No.* 33533
CUST. REF. 621535

REF. DRAWING *NOS.*
Hub R9855C

Compiled by *David Ratcliffe*

PARTS AND SERVICE MANUAL
FOR AXLES FITTED
TO PREVOST 6 X 2 COACH

1st. AXLE TYPE S82
AXLE ASSEMBLY No.25546
CUST. REF. 610985

REF. DRAWING *Nos.*
Hub F4651 A
Instl F4651 E

2nd AXLE TYPE TS5
AXLE ASSEMBLY *No.* 33533
CUST. REF. 621535

REF. DRAWING *NOS.*
Hub R9855C

Compiled by *David Ratcliffe*

The description, testing procedures, and specifications contained in this parts / service publication were current at time of printing. This manual will not be updated. If in doubt about any aspect of maintenance or servicing of the axle please contact the vehicle bullder or our service department direct.

GKN Axles Ltd. Kirkstall Division reserves the right to discontinue or modify its procedures and to change specifications at any time without notice and without incurring obligation.

The recommendations of the vehicle manufacturer should be considered as the primary source of service Information regarding this GKN Axles product. This manual la Intended to be used as a supplement to such information.

Any references to brand names in this publication is made simply as an example of the types of tools and materials recommanded for use and, as such, should not be considered as an endorsement. Equivalents, if avallable, may be used.

MANUAL ISSUE SHEET

Page No.	Issue	Description / Alteration	Reason	Date
All	A	New manual		Aug. 94

MANUAL CONTENTS

SECTION A LUBRICATION

		Page No.
	Front Page	A1
	Lubrication instructions for type S82 steer axle	A2
	Lubrication instructions for type TS5 trailing axle	A3
	Notes	A4

SECTION B SERViCE INSTRUCTIONS FOR STEER AXLE TYPE S82

	Front page	B1
	Description	B2
Section 1	Routine maintenance	B2
Section 2	Removal of hub	83
Section 3	Removal of stub axle	B3
Section 4	Dismantling ball socket asembly	B4
section 5	Re-assembly of bail socket & tie rod	B5 & B6
Section 6	Refitting swivel assembly	B7
Section 7	Swivel bearing adjustment	B8
Section 8	Swivel final assembly	B 9 & B 1 0
Section 9	Assembly of hub	B11 to B13
Section 10	Final assembly	B14
	Tightening torque table for type S82 steer axle	B15
	Parts identification / spares lists	B16 & B17
	Notes	B18
	illustration for steer axie type S82 (F47)	

SECTION C SERVICE iNSTRUCTIONS FOR TS5 HUB UNIT

	Front Page	C1
	Description	C2
Section 1	Routine maintenance	C2
Section 2	Removal of hub unit	C2
Section 3	Assembly of hub unit	C3 to C5
	Tightening torque table for type 1S5 hub unit	C6
	Parts list for TS5 hub unit	C7
	Notes	C8
	illustration of 1S5 hub unit (H86)	

LUBRICATION INSTRUCTIONS FOR AXLES FITTED TO PREVOST 6 X 2 COACH

MANUAL SECTION A

LUBRICATION INSTRUCTIONS FOR TYPE S82 STEER AXLE

1.1 Lubricate the stub axle and socket assemblies with one of the following recommended greases at regular intervals not exceeding 10,000 miles or 6 (six) week Whichever occurs first at grease points as shown (fig. no.1).

.,2 Clean out and recharge hub & hub bearings every 12 months. See figure no.2 for amount of grease to be used.

Recommended Greases

Lithium base roller bearing grease NLGI - no.2 (Shell Retinax LX or equivalent).

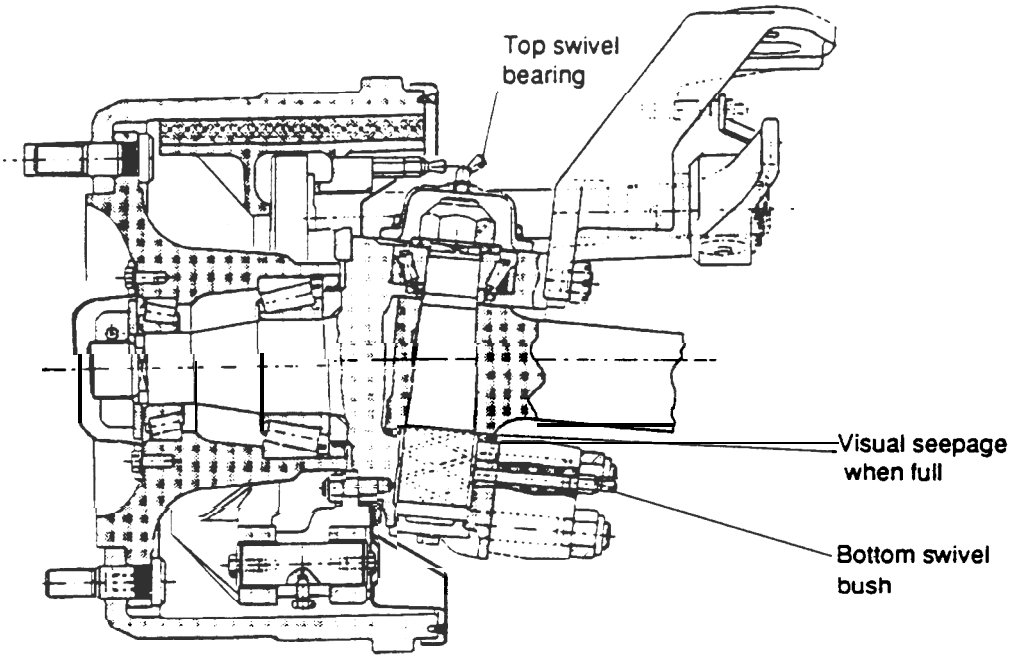

Greasing points
Fig No. 1

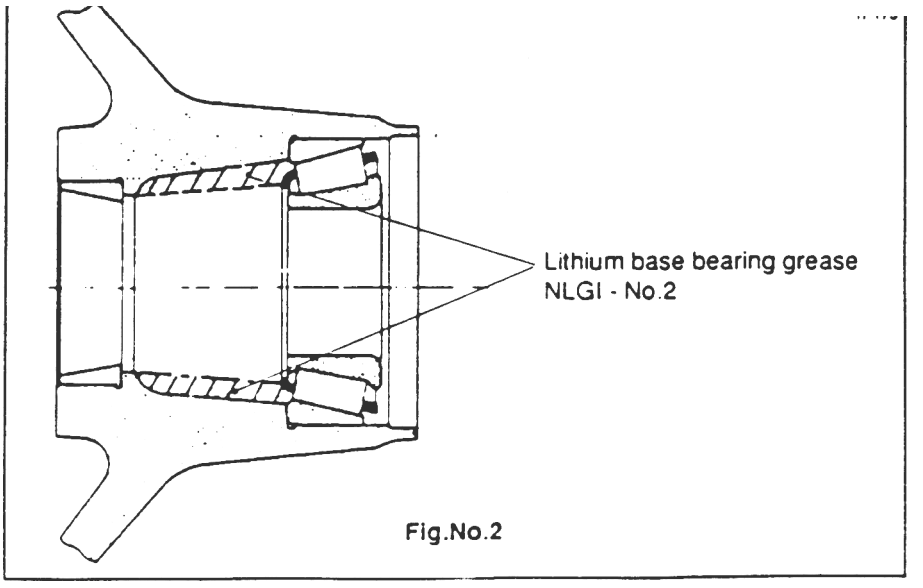

Fig.No.2

LUBRICATION INSTRUCTIONS FOR TS5 HUB UNIT WITH KNORR AIR DISC BRAKE

Clean out and recharge hub & hub bearings every 12 months See figure no.3 for amount of grease to be used.

Recommended Greases

Lithium base roller bearing grease NLGI - no 2 (Shell Retinax LX or equivalent)

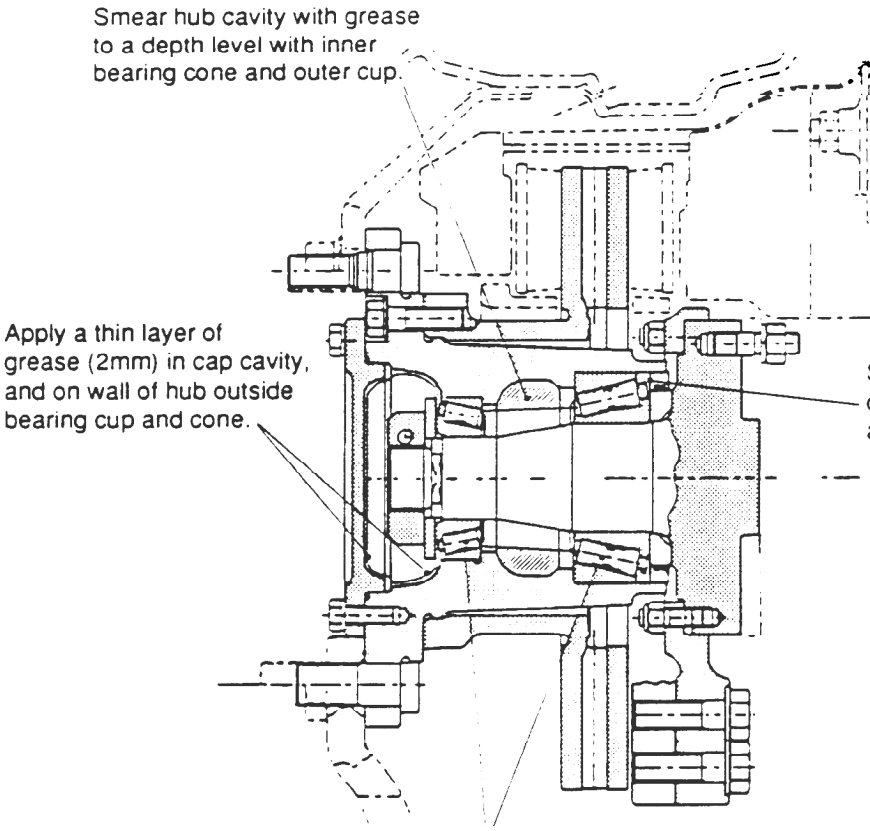

Fig. No. 3

Notes

PARTS AND SERVICE INSTRUCTIONS FOR S82 STEER AXLE WITH KNORR AIR DISC BRAKE

ILLUSTRATION No.F47

MANUAL SECTION B

PARTS AND SERVICE INSTRUCTIONS FOR TYPE S 82 STEER AXLE

DESCRIPTION

The axle is of the 'Reverse Elliot' type comprising a girder section axle bed or beam with stub axles. Each stub axle is carried on a taper king pin, with a steep angle taper roller bearing at its top and a plain phosphor bronze bush at the bottom.

The hub taper roller bearings are of a generous size and, adjusted by means of special split nut with 'D' washer.

Brakes may be of GKN or proprietary manufacture which can be serviced without disturbing the hub.

Steering ball joints with hardened balls and rubbing pads incorporate compression springs which automatically take up any wear.

SECTION 1 ROUTINE MAINTENANCE

1.1 Hub bearing adjustment

a) An inspection should be made after the first 3,000 miles (4,800 km) and then at intervals of 25,000 miles (40,000km). With the wheels raised they should revolve quite freely without roughness.

b) Hub bearings should have a slight end float movement within the limits 0.0005" to 0.002" when rocked forwards and backwards on axle stub.
See section 8, page B9 if any adjustment is required.

1.2 To check front wheel' Toe In'

a) To preserve correct steering and avoid excessive tyre wear, tracking (or alignment) of the front wheels should be checked periodically, as follows :-
Set the front wheels in straight ahead position and at points level with wheel centre, measure distance between edges of wheel rims, troth in front and behind axle centre. For correct 'Toe In', front measurement 'B' should be O" to $^{1}/_{32}$" smaller than rear measurement 'A'. See fig.no.1.

b) To allow for inaccuracies in wheels, the same check should be made with vehicle moved an equivalent to half of wheel revolution. Any adjustment required can be effected by slackening the clamp bolts in ball sockets and rotating tie (track) rod tube.
After adjustment, tighten clamp bolts to 51-62 Ibs. ft. (69 - 84Nm.) torque.

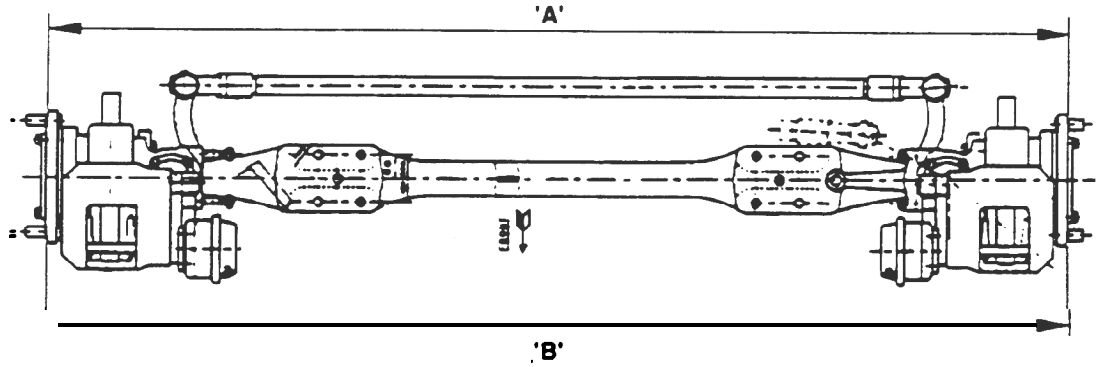

Measure dimensions 'A' and 'B' over hub flanges on horizontal centre line, To give correct 'TOE IN' dimension 'A' should be O" - 1/32" greater than dimension 'B'

Fig. No. 1

SECTION 2 TO REMOVE HUB UNIT

2.1 Chock the appropriate wheels.
2.2 whilst road wheels are still on ground loosen wheel nuts (7 Posn) slightly.
2.3 Raise vehicle, remove road wheel nuts and remove road wheels.
2.4 Disconnect air line from brake caliper (13).
2.5 Remove brake caliper setscrews with washers (16 & 15) then lift off brake caliper assembly (13).
2.6 Remove hub cap setscrews and washers (1 & 2).
2.7 Remove hub cap (3) with 'O' ring(4) then discard 'O' ring.
2.8 Remove hub bearing pinch bolt nut (5) and bolt (66), then remove hub bearing nut (67) along with hub bearing washer (6).
2.9 Remove hub (8) complete with its bearings (11/11 A & 64/64A) and oil seal (12) then lift off outer bearing cone (64A).
2.10 Remove oil seal (12) and inner bearing cone (11A) from hub (8)
2.11 Drive out hub bearing cups (11 & 64) from hub (8).
2.12 If hub bearing distance piece (oil seal wear sleeve) (60) shows Signs of wear or corrosion it must be removed and replaced with a new part.

SECTION 3 TO REMOVE THE STUB AXLE ASSEMBLY

3.1 Remove split pin (46) followed by nut (47) with washer (48), then separate ball socket (39) from bottom lever (49) with suitable ball pin extractor.

Note :- When separating ball joint from steering lever, an extractor tool MUST be used. DO NOT strike areas around ball pin tapers with hammer blows under any circumstances due to possible bail pin taper deformation.

3.2 Remove swivel lop cap setscrews and washers (25 & 24), enabling swivel top cap (23) to be removed.
3.3 Remove sealant from top cap and swivel mating faces (23 & 58) using Loctite' Chisel Gasket Remover ' or by carefully scraping sealant from faces
3.4 Remove bottom cap setscrews and washers (53 & 54).
3.5 Pull off swivel bottom cap (55) then remove sealant from bottom cap and swivel mating faces (55 & 58) using Loctite' Chisel Gasket Remover' or by carefully scraping sealant from faces.
3.6 Remove swivel pin nut and washer (22 & 21).
3.7 Give axle beam (37) a sharp tap to loosen swivel pin (56). The swivel pin (56) can then be driven out downwards, thus releasing it from axle beam.
3.8 The swivel assembly can be removed from axle beam (56).
3.9 Take out swivel pin bearing (20/20A), swivel bearing adjustment shims (19), swivel bearing sleeve (17) and swivel pin oil seal (18) from top of swivel (58).
3.10 Take out swivel bush seal (52) and swivel pin bush (57) from bottom of swivel (58).
3.11 Remove bottom lever nuts (42), then pull off bottom lever (49).
Care must be taken not to damage bottom lever studs (50 & 51).
3.12 Check the condition of swivel stop nut (33), and adjusting washer (32), removing for replacement if required.

Inspection

Thoroughly clean all parts, respect for wear and renew if required

SECTION 4 DISMANTLING BALL SOCKET SEE FIG No 2.

4.1 Remove dirt seal (15) also dirt Seal (pressing) (16) from ball pin.

4,2 Slacken pinch bolt nut (10) then unscrew and remove ball socket assembly from tie rod having first marked ball socket body and tie rod to enable tracking on re-assembly,

4,4 Remove adjuster split pin (9) from ball socket body (3).

4.5 Remove Cap (8) then using a suitable tool ie: a piece of 1 " x 1/8 " x 9 " flat bar, unscrew and remove adjusting piece (7). Waggle ball (2) to free thrust cap (5).

4.6 Remove compression spring (6) also thrust cap (5) from ball socket body.

4.6 Relieve peening on socket body top (3) then using a hide faced mallet, tap half pin (2) out of body. This operation will also remove cover plate (1) from body (3).

4.7 The rubbing pad (4) can now be removed from body (3).

Thoroughly clean all parts and check for wear, renewing where necessary.

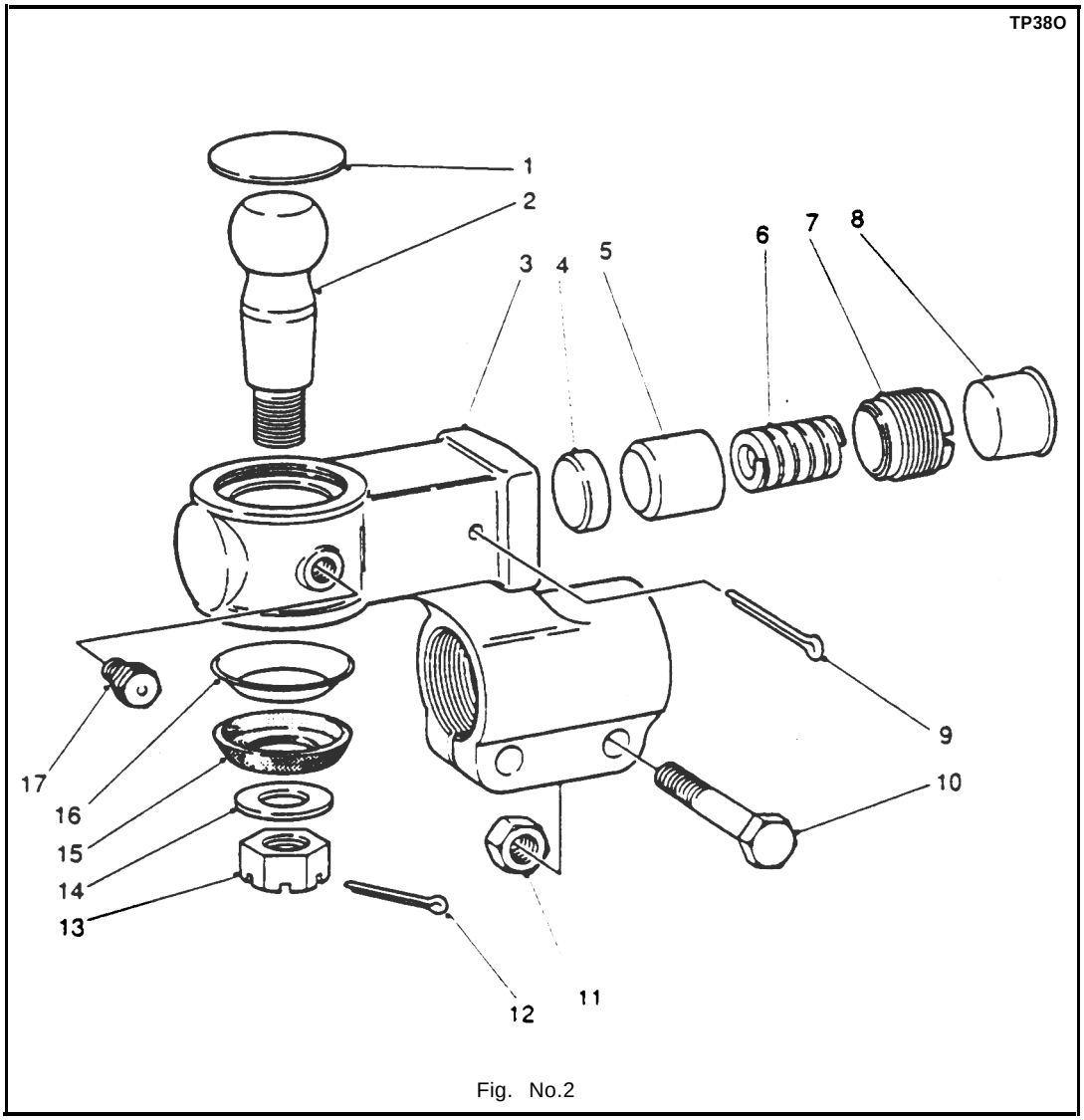

Fig. No.2

SECTION 5 ASSEMBLY OF BALL SOCKET ANO TIE ROD Fig No 3.

Note :- Method of assembling ball socket is same for drop type shown and alternative straight body type.

5.1 Apply a bead of Loctite 638 Sealant to mating corner of rubbing pad (4) in socket body (3) then knock rubbing pad (4) into its recess in ball socket body.

5.2 Thoroughly grease rubbing pad (4) and ball pin (2) with Shell 'Retinax LX' or equivalent.

5.3 Insert ball pin (2) into body.

5.4 insert thrust cap (5), compression spring (6) and adjuster piece (7) into body.

5.5 Using a suitable tool ie: a 1" x 1/8 " x 9" long flat bar, tighten adjuster piece (7) fully home (SOLID) locating thrust cup (5) onto ball pin (2).

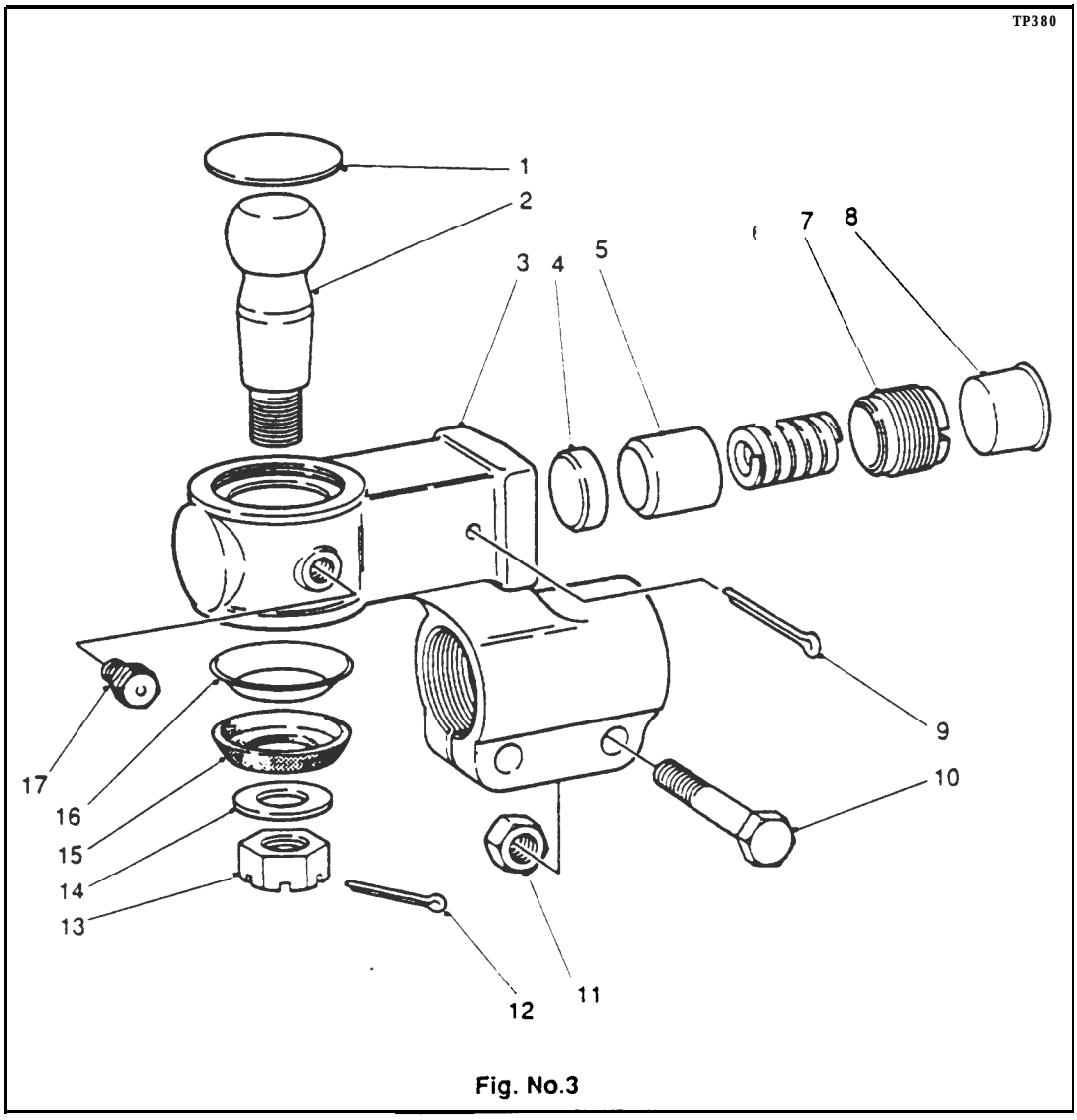

Fig. No.3

SECTiON 5 ASSEMBLY OF BALL SOCKET AND TIE ROD Cont.

5 7 Still with tool located on adjuster Piece (7), back off carefully **(LEAST AMOUNT)** until adjuster piece. split pm (9) is allowed to pass through body, and that bail pin shank can be moved by force of hand, then remove tool.

Note :- If ball pin (2) does not rotate when re-adjusted in line with above instructions, this suggests that ball pin has local worn flats as shown in fig.no.4. In this instance ball pin (2), thrust cup (5) and rubbing pad (4) MUST be replaced, if not FAILURE could occur in service, Ie ball pin (2) not being able to move in assembly when turning from lock to lock as shown in fig 5.

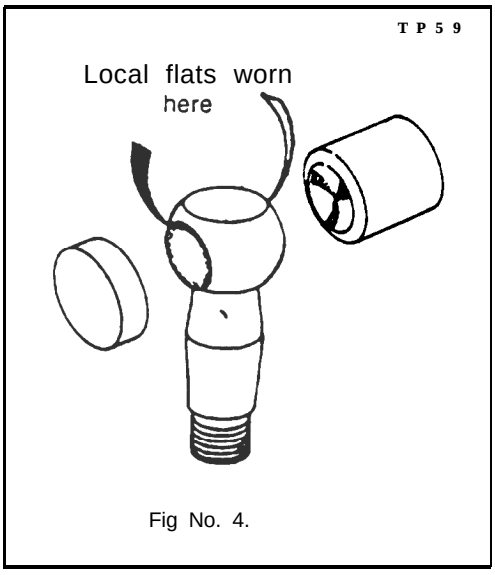

Fig No. 4.

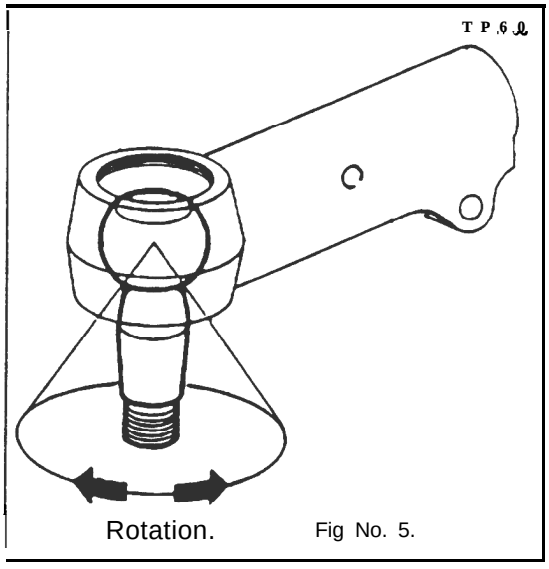

Fig No. 5.

5.8 Fit cover plate (1) into top of ball socket body, re-peen using a cold chisel to secure.
5.9 Screw assembled ball socket onto tie rod. Lining up marks on both body and tie rod previously made, or retracing using manual instructions.
5.10 Fit pinch bolts (1O) and nuts (11) then ighten nuts (11) alternately and progressively to 65- 75lbs.ft. (88 - 102Nm.) thus securing ball joint to tie rod.
5.11 Fit dirt seal (pressing) (16) and dirt seal (rubber) (15) onto ball pin (2).
5.12 Locate ball socket and tie rod assembly with steering lever, carefully align and fit ball pin (2) into hole in steering lever.

Note :- Ball pin (2) and ball pin tapers in bottom steering levers (49. F47) must be clean, dry and free from oil prior to assembly.

5.13 Fit pin washer (14) onto ball pin (2).
5.15 Screw pin nut (13) onto ball pin (2) then tighten to 175 tbs. ft. (237Nm.) torque.
5.16 Using a 21b hammer, tap steering lever to 'Shock' ball pin (2) into taper hole.
5.17 Re-torque pin nut (13) to 175 Ibs. ft. (237Nm)
5.18 Fit split pin (12), if slot / hole are not in line, adjust up to next slot.

Min pin nut torque 175 Ibs. ft. (237Nm). Max pin nut torque 200 Ibs ft. (271Nm)

519 Re-charge ball socket with Shell 'Retinax LX' or equivalent grease through lubricator (17).

SECTION 6 REFITTING SWIVEL ASSEMBLY

61 Prior to assembly, pack swivel pin bearing (20/20A) with lithium base grease (Shell Retinax LX or equivalent) using a bearing packer or manually knead grease between rollers, race and cage.

62 Coat all internal surfaces / parts with clean gear oil.

63 Fit swivel pin top oil seal (18), open side first, into position in top swivel bore (58).

64 Fit swivel pin bearing cup (20) into position in swivel bore (58),

65 Press swivel pin bottom bush (57) into position in swivel bore (58) flush with bottom face of swivel.

66 Fit swivel bush seal (52) onto the protruding diameter of swivel pin bottom bush (57) then place dirt excluder (78) into position over seal.

67 Position swivel assembly onto axle beam (37).

Note :- care must be taken during this operation so as not to roll or trap swivel bush seal (52).

Suggest a thin piece of card or plastic placed on seal during this operation.
Make sure that swivel pin bore is free of burrs and corrosion, then grease bore with multi purpose chassis grease.

68 Drive swivel pin (56) through swivel (58) and axle beam (37).

6.9 Lubricate swivel pin bearing sleeve (17) with clean oil / grease then fit over protruding swivel pin (56), large chamfer first to locate in oil seal bore (18) and abut axle bed (37).

6.10 Select swivel bearing adjustment shims (19) with a total thickness of approximately 0.020” and place in position on top swivel bearing sleeve (37).

6.11 Fit swivel pin cone (20A) into swivel pin bearing cup (20)

6.12 Fit swivel pin washer (21) and swivel pin nut (22) then tighten nut to 500-700 tbs. ft. (678 - 949Nm.)

6.13 Using a 7/14 lb hammer, shock load axle beam (37) on forged end area.

SECTION 7 SWIVEL BEARING ADJUSTMENT

7.1 With nominal shim (19) thickness of O 020 " placed between bearing (20/420A) and bearing sleeve (17), attach a cord and spring balance capable of reading 25 Ibs (11 ½ kg) to end of stub axle (58) as shown in fig. no. 6.
Pull swivel from lock to lock, noting spring balance reading, ignoring the force needed to start movement. The correct reading should be between 12 to 24 Ibs. (5.5 to 1 Ikg.) pull giving 10-20 Ibs ft. (13.6 - 27Nm.)
If the reading is outside these limits, it WiII be necessary to alter shim thickness (39) between bearing cone (20A) and its sleeve (17).

To increase the load required, remove shims from nominal pack.

To decrease the force required, add shims to the nominal pack.

Add or subtract shims as required until a reading of 10-20 Ibs. ft. (13.6 - 27Nm.) is obtained.

7.2 When swivel is set correctly, check that swivel pin nut (22) is tightened to 500-700 Ibs. ft. (678 - 949Nm.) torque.

T P 8 3

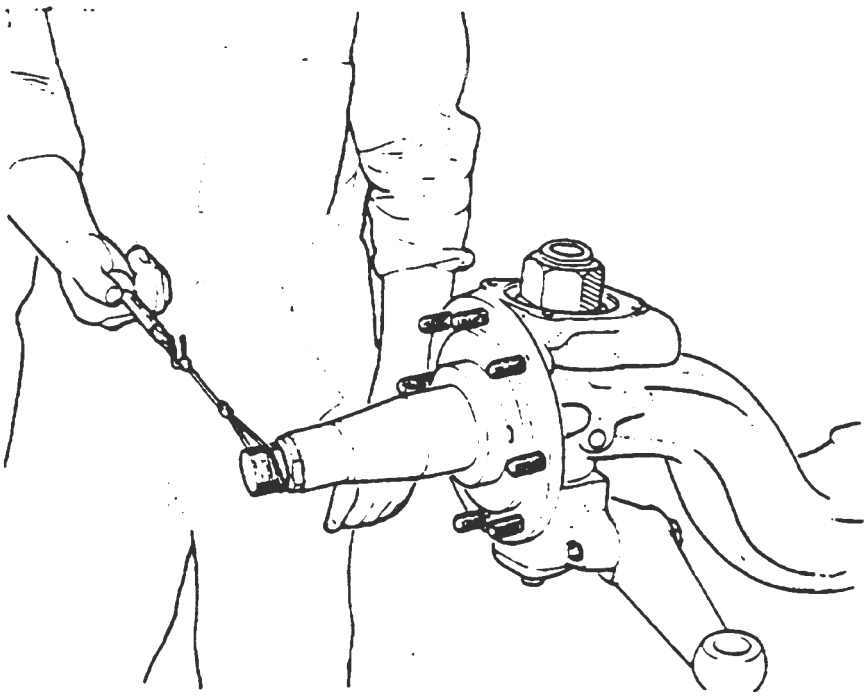

Method of checking swivel bearing adjustment

Fig. No. 6.

SECTION 8 SWIVEL FINAL ASSEMBLY

8.1 Apply a thin layer (1/18 "- 15mm) of lithium base grease (Shell Retinax LX or equivalent) to the inside of swivel top cap (23).

8.2 Clean fop cap and swivel mating faces (23 & 58) with Loctite Superclean Safety Solvent no.706 or other suitable chlorinated solvent then apply a complete 1/8" bead of Loctite Superflex (black) around base of top cap (23) before fitting to swivel (58) within 5 minutes of applying Loctite. See fig. no.3

8.3 Secure top cap (23) with swivel top cap setscrews and washers (25 & 24) and lighten to 51-62 tbs. ft. (69 - 84 Nm.).

8.4 Clean bottom cap and swivel mating faces (55 & 58) with Loctite Superclean Safety Solvent no.706 or other suitable chlorinated solvent then apply a complete 1/8" bead of Loctite Superflex (black) around base of bottom cap (55) before fitting to swivel (58) within 5 minutes of applying Loctite. See fig. no.7

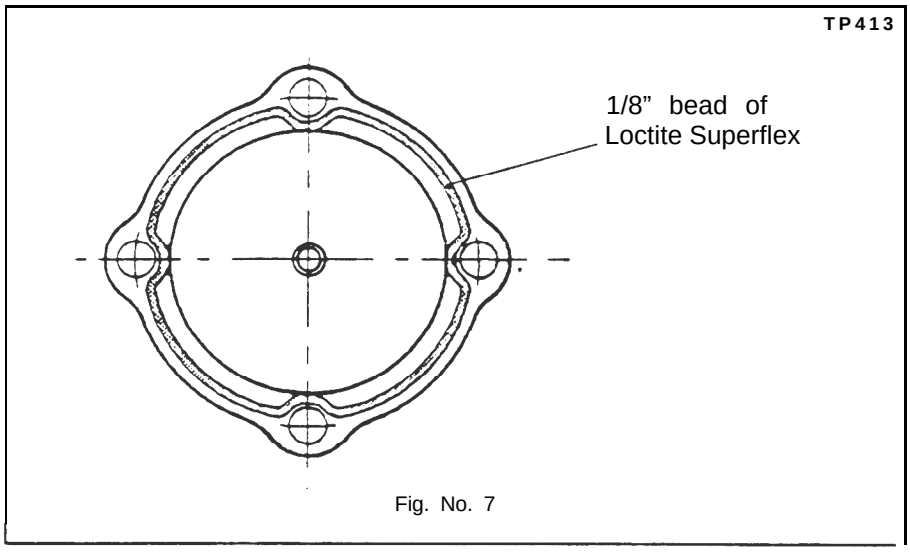

Fig. No. 7

8.5 Secure bottom cap (55) with swivel bottom cap setscrews and washers (53 & 54) then tighten to 26 - 32 lbs. ft. (33 - 35 Nm.).

8.6 Check tightening torque of bottom lever studs (50 & 51) is within limits of 190 - 210 Ibs ft. (258 - 285 Nm.).

8.7 Locate bottom steering lever (49) onto studs (50 & 51). then fit steering lever nuts (42) and tighten to 190 - 275 Ibs. ft. (258 - 353 Nm.).

8.8 Check that tightening torque of top steering lever studs (28) is between limits 190 - 210 Ibs ft. (258 - 285 Nm.).

8.9 Fit top steering lever (29) onto studs (28) then fit nuts (30) and tighten to 190 - 275 Ibs.ft. (258 - 353 Nm.).

8.10 Fit new lubricators (26 & 44) with protective caps (27 & 43) into their respective pcsitions in swivel top cap (23) and bottom steering lever (49).

SECTION 8 SWIVEL FINAL ASSEMBLY Cont.

8.12 Charge swivel assembly with grease,
Swivel is full when grease seeps from between **upper face** of axle beam (37) and swivel jaw (58) in top-half (see fig. no. 8) and from between swivel oil seal (58) and **lower face** of axle beam (37) (see fig. no.9).

TP377

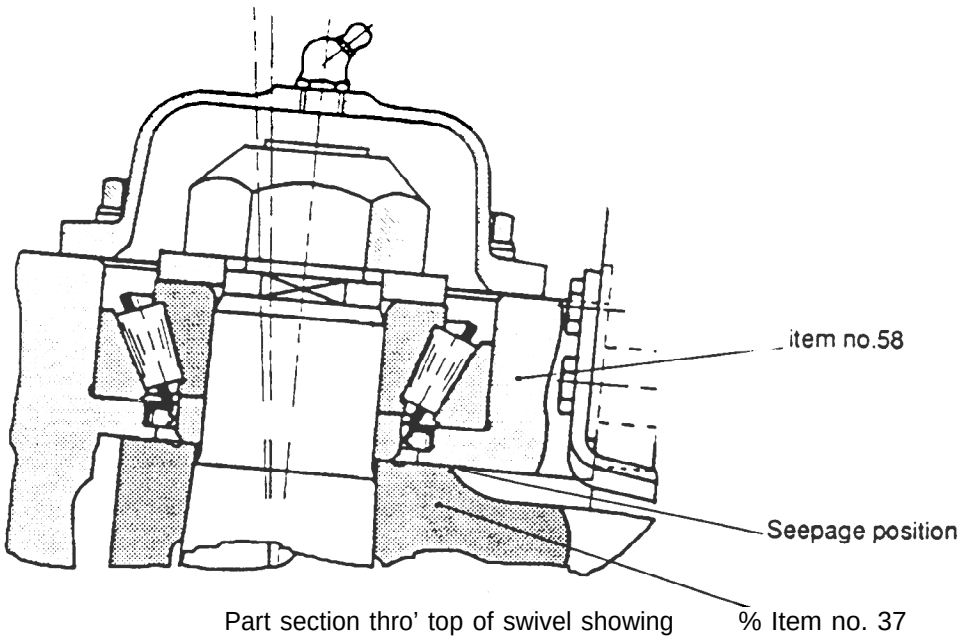

Part section thro' top of swivel showing grease seepage position when full.

Fig. No. 8

TP748

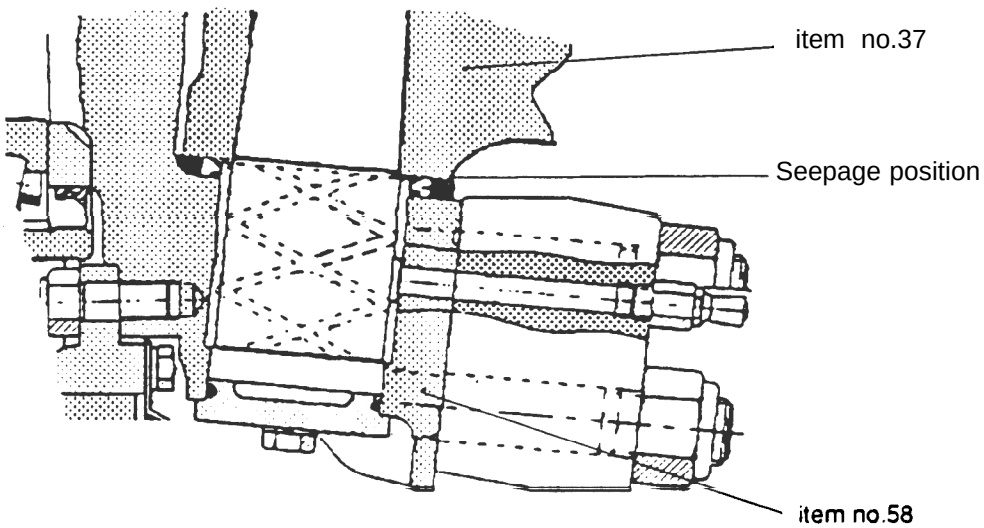

Part section thro' bottom of swivel showing grease seepage position when full.

Fig. No. 9

8.13 Reconnect ball socket and tie rod (39 & 38) to steering lever (49)

Note :- Ball pin (39) and ball pin tapers in bottom steering levers (49) must be clean, dry and free from oil prior to assembly.

SECTION 9 TO ASSEMBLE THE HUB

Prior to assembly, pack hub bearing (11/11A & 64/64A) with lithium base grease (Shell Retinax LX or equivalent) using a bearing packer or manually knead grease between rollers, race and cage.

9.1 Fit hub bearing distance piece (60) onto swivel stub axle (58).
9.2 Fit inner and outer hub bearing cups (11 & 64) onto their bores in hub (8).
9.3 Fill hub cavity with lithium base grease (Shell Retinax LX or equivalent) from outer bearing shoulder to centre line of inner bearing cone as shown in figure no.10.

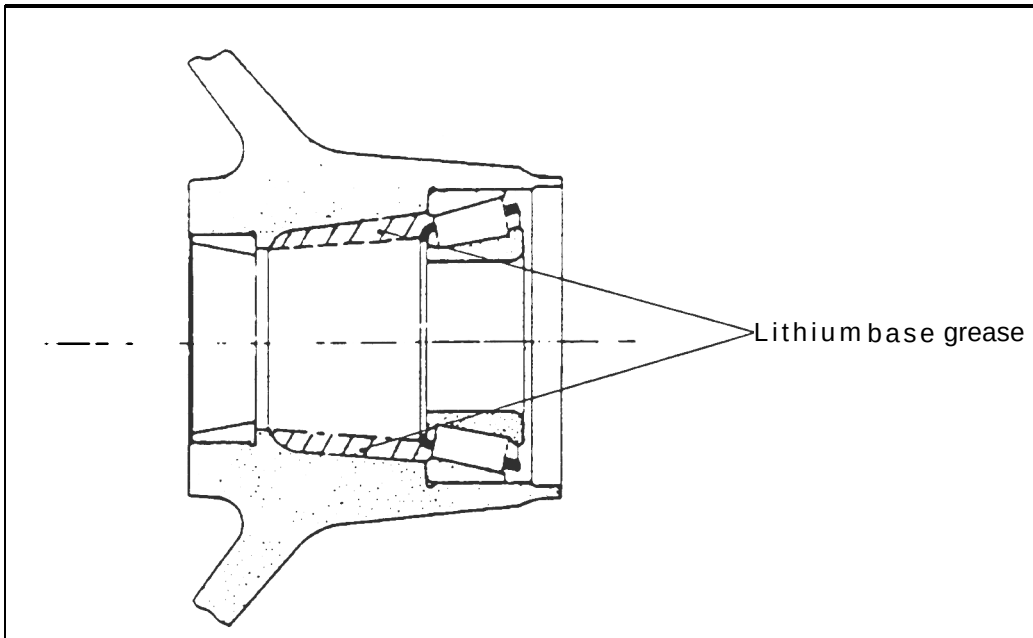

Fig. No.10

9.4 Fit inner hub bearing cone (11A) into its cup in hub (8).
9.5 Press hub oil seal (12) into position in hub (8)using a suitable bumper tool which locates on outer parltof seal to prevent damage on assemble.
9.6 Fit hub assembly onto swivel stub axle (58).
9.7 Fit outer bearing cone (64A) into its cup (64).
9.8 Fit hub bearing washer and hub bearing nut (6 & 67). Tighten nut hard with the aid of a small tommy bar just enough to take up bearing slack.
9.9 Fit hub bearing nut pinch bolt and nut (66 & 5), tighten finger tight.

SECTION 9 TO ASSEMBLE THE HUB Cont.

9.10 Adjust hub 'End Float' as follows :-
Rotate hub and using a hide faced mallet, knock hub backwards and forwards along axle arm to 'Shock Load' and thus settle bearings in positlion.

Note :- It Is very important to rotate and 'shock load' the hub because :-

a) The rotation serves to ensure that bearing rollers Settle into running in their correct tracks.
b) The' Shock Load" is to ensure that bearings are seated correctly up to their abutment shoulders.

Test the tightness of hub bearing nut (67), if loose, re-tighten hard.
Rotate and' Shock Load' the hub again.
Continue this procedure until hub bearing nut (67) cannot be tightened further after hub has been rotated and' Shock Loaded '.
Back off hub bearing nut (67) by approximately30' then rotate again and knock hub outward along axle arm to release bearings.
Mount a dial indicator on hub flange (8) and position its pointer on end of axle stub (see fig. no. 11.).
Rock the hub backwards and forwards along axle arm, taking a reading on dial indicator.
The correct' End Float' is between Iimits 0.0005" to 0.002" (0.013 to 0.050 mm).
Tighten the hub bearing pinch bolt nut (5) to 24-26 lbs ft. (33 - 35 Nm.).
Check the' End Float' again, using above procedure, and adjust if outside specified limits.

TP843

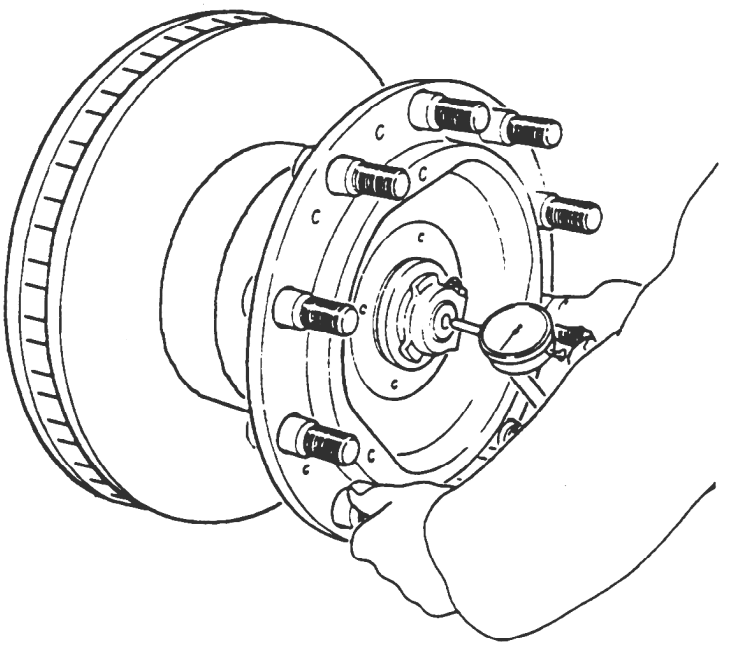

To adjust hub 'End Float'
Fig. No. 11.

SECTION 9 TO ASSEMBLE THE HUB Cont.

9.11 Smear the inside of hub cap (3) with a thin coating of grease as indicated in Iubrication section A, page no A3.

9.12 Clean hub cap and hub mating faces (3 & 8) with Loctite Superclean Safety Solvent no.706 or other sultable chlorinated solvent then apply a complete 1/8" bead of Loctite superflex (black] around mating face of hub cap (3). See fig. no. 12.

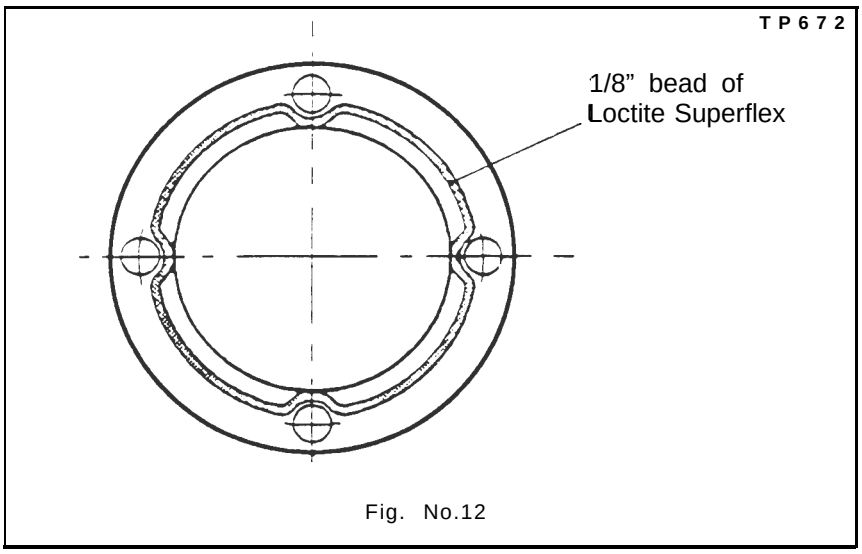

Fig. No.12

9.13 Fit hub cap along (3) within 5 minutes of applying sealant then secure with hub cap setscrews and washers (1 & 2) tightening setscrews to 85-103 Ibs. ft. (115 - 140 Nm.).

SECTION 10 FINAL ASSEMBLY

10.1 Refit road wheels, securing with wheel nuts (7 posn.).
Tighten nuts to 475-525 Ibs. ft. (644 - 712 Nm).

10.2 Check axle supports then lower vehicle to ground.

10.3 Remove chocks and jacks.

10.4 Check wheel alignment as follows:-
Set the wheels in a straight ahead position, and at points level with wheel centre, measure distance between edges of wheel rims both in front and behind axle centre.
For correct alignment the front measurements should be O“ to 1/32 " smaller than that of rear ie : ‘Toe In’ to allow for inaccuracies in the wheels, the same checks should be made with vehicle moved so that wheels have moved a further half a revolution (see fig. no.13)
Adjust if required by slackening ball joint clamp bolts and rotating track rod tube.

DO NOT forget to re-tighten the clamp bolts to 51-62 tbs. tt. (69 - 84Nm.) after adjusting.

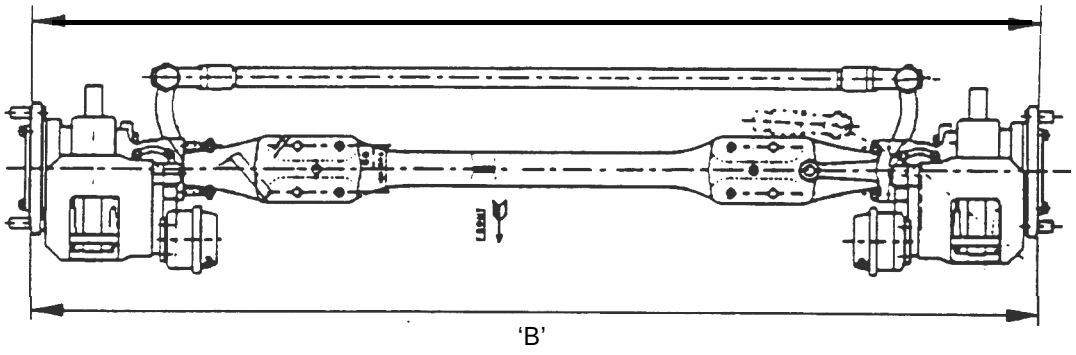

Measure dimensions ‘A’ and ‘B’ over hub flanges on horizontal centre line, To give correct **‘TOE IN’** dimension ‘A' should be O“ - 1/32” greater than dimension ‘B'

Fig. No. 13

TORQUE TABLE FOR S 82 STEER AXLE WITH KNORR AIR DISC BRAKE

Item No	Description	Torque
1	Hub cap setscrew	85 - 103 lbs. ft. (115 - 140Nm)
5	Hub pinch bolt nut	24 - 26 lbs. ft. (33 - 35Nm)
7	Wheel nut	475 - 525 lbs. ft. (644 - 712Nm)
16	Brake caliper setscrew	310 - 340 lbs. ft. (420 - 461Nm)
22	Swivel pin nut	500 - 700 lbs. ft. (678 - 949Nm.)
25	Top cap setscrew	51 - 62 lbs. ft. (69 - 84 Nm)
28	Top Lever stud	190 - 210 lbs. ft. (258 - 285Nm)
30	Top Lever nut	190 - 275 lbs. ft. (258 - 373Nm)
31	Caliper bracket nut	85 - 103 lbs. ft. (115 - 140Nm.)
42	Bottom lever nut	190 - 275 lbs. ft. (258 - 373Nm)
47	Ball socket nut	100 - 170 lbs. ft. (136 - 231Nm)
50 & 51	Bottom lever stud	190 - 210 lbs. ft. (258 - 285Nm)
53	Bottom cap setscrew	26 - 32 lbs. ft. (35 - 43Nm)
59	Caliper bracket stud	51 - 62 lbs. ft. (69 - 84Nm.)
62	Caliper bracket nut	85 - 103 lbs. ft. (115 - 140Nm.)

PARTS LIST FOR S82 STEER AXLE (WITH KNORR DISC BRAKE)

CUSTOMER PREVOST **AXLE ASSEMBLY No.2554E**

ILLUSTRATION No.F47

Item No	Description		Qty.Per Axle	Part No.	Recommended Spares Holding Per 25 Axles	50 Axles	100 Axles
1	Hub cap setscrew		8	ML6012/35S	8	8	16
2	Hub cap spring washer		8	ML5712/1	8	8	16
3	Hub cap		2	F4651/29	2	4	6
4	Hub cap 'O' ring		2	R9434/149	2	2	4
5	Bearing nut pinch nut		2	SL228/4	2	4	6
6	Hub bearing 'D' washer		2	7786/30	2	4	6
7	Wheel stud protective cover		20	R9855/161			
8	Hub		2	F4651/28	2	4	6
9	Wheel stud RH		10	F4561/75	30	60	120
	Wheel stud LH		10	F4561/76	30	60	120
10	Pole wheel		2	F4651/100	2	4	6
11	Hub outer bearing cup	Kit no.	2	SL289/107	4	8	16
11A	Hub outer bearing cone	17899/1	2	SL289/286	4	8	16
12	Hub oil seal		2	7786/32	4	8	16
13	Brake caliper RH		1	SM486/2K	1	2	3
	Brake caliper LH		1	SM486/3K	1	2	3
14	Caliper mounting bracket RH		1	F4651/86	1	2	3
	Caliper mounting bracket LH		1	F4651/87	1	2	3
15	Brake caliper retaining washer		12	N70040	12	12	24
16	Brake caliper retaining bolt		12	N70251	12	12	24
17	Swivel pin bearing sleeve		2	7662/19	2	4	6
18	Swivel pin oil seal		2	F4350/32	4	8	16
19	Adjusting shim (0.005")			4493/119	6	12	24
	Adjusting shim (0.010")		as	4493/119A	6	12	24
	Adjusting shim (0.015")		reqd	4493/119B	6	12	24
	Adjusting shim (0.008")		·	4493/119D	6	12	24
	Adjusting shim (0.006")		·	4493/119E	6	12	24
20	Swivel bearing cup	Kit no.	2	SL289/47	4	8	16
20A	Swivel bearing cone	17898I75	2	SL289/48	4	8	16
21	Swivel pin 'D' washer		2	7433/30	2	4	6
22	Swivel pin nut		2	F4330/15	2	4	6
23	Top cap		2	F4561/16	2	4	6
24	Top cap setscrew spring washer		8	SL241/5	8	8	16
25	Top cap setscrew		8	SL554/4	8	8	16
26	Lubricator		2	SL1000/1	2	2	4
27	Lubricator protective cap		2	SL1000/76	2	2	4
28	Top steering lever stud LH		2	SL778/11	2	2	4
	Top steering lever stud RH		2	SL778/21	2	2	4
29	Top lever (LH)		1	F4651/9	1	2	3
30	Top lever nut		4	SL222/9	4	4	8
31	Brake caliper bracket nut		6	SL228/6	6	6	12
32	Stop screw adjusting washer		as	SL246/151	6	12	24
	Stop screw adjusting washer		reqd	SL246/152	6	12	24
	Stop screw adjusting washer		·	SL246/153	6	12	24
	Stop screw adjusting washer		·	SL246/269	6	12	24
33	Swivel stop screw LH		1	7903/44A	1	2	3
	Swivel stop screw RH		2	7903/44G	2	4	6
34	Supplied within item 58						
35 & 36	Not required on this application						
37	Axle bed		1	F4651/1	1	2	3
38	Tie rod (assy with itm 39 - 25632/1)		1	F4560/12			
39	Socket assembiy		1	25630			
	Socket assembiy		1	25631			
40	Lubricator		2	SL1000/1	2	2	4
41	Lubricator protective cap		2	SL1000/76	2	2	4
42	Steering lever stud nut		4	SL222/9	4	4	8

AXLE ASSEMBLY No.25546
ILLUSTRATION No.F47

Item No	Description		Qty.Per Axle	Part No.	Recommended Spares Holding Per 25 Axles	50 Axles	100 Axles
43	Lubricator protective cap		2	SL1OOOI76	2	2	4
44	Lubricator		2	SL1000/1	2	2	4
45	Lubricator extension		2	SL1OOO/31			2
46-48	Supplied within item 39						
49	Bottom lever RH		1	F4651/7	1	2	3
	Bottom lever LH		1	F4651/8	1	2	3
50	Steering lever stud - long		2	SL778/18	2	2	4
51	Steering lever stud - short		2	SL778/13	2	2	4
52	Swivel pin seal (upper) ('V' ring)		2	LS1060/64A	6	12	24
53	Bottom cap setscrew		4	SL553/4	4	4	8
54	Spring washer		4	SL242/4	4	4	8
55	Swivel bottom cap		2	5430/34	2	4	6
56	Swivel pin		2	7786/14	2	4	6
57	Swivel pin bottom bush		2	7786/20	2	4	6
58	Swivel assembly LH		1	SF4651/2	1	2	3
	Swivel assembly RH		1	SF4651/3	1	2	3
59	Brake caliper bracket stud		10	SL785/110	10	10	20
60	Hub bearing distance piece		2	7816/26	2	4	6
61	Brake caliper bracket bolt		6	SL795/68	6	6	12
62	Brake caliper bracket nut		10	SL228/6	10	10	20
63	Brake disc		2	F4651/88	2	4	6
64	Hub Inner bearing cup	Kit no,	2	SL289/293	4	8	16
64A	Hub inner bearing cone	17899/2	2	SL289/294	4	8	16
65	Brake disc capscrew		20	ML7916/50X	20	20	40
66	Bearing nut pinch bolt		2	SL553/17	2	4	6
67	Hub bearing nut		2	7786/77A	2	4	6

Notes

Drawn by D J Highton February '94

Annotations relevant to Tightening Torque Table ●

● Tightening Torque					
Item Numbers	lbs ft	Nm	Item Numbers	lbs ft	Nm
1, 31, 62	85/103	115/140	28, 50, 51	190/210	258/285
5	24/26	33/35	30, 42	190/275	258/373
16	310/340	420/461	47	100/170	136/231
22	500/700	678/949	53	26/32	35/43
25, 59	51/62	69/84	65	295/325	400/441

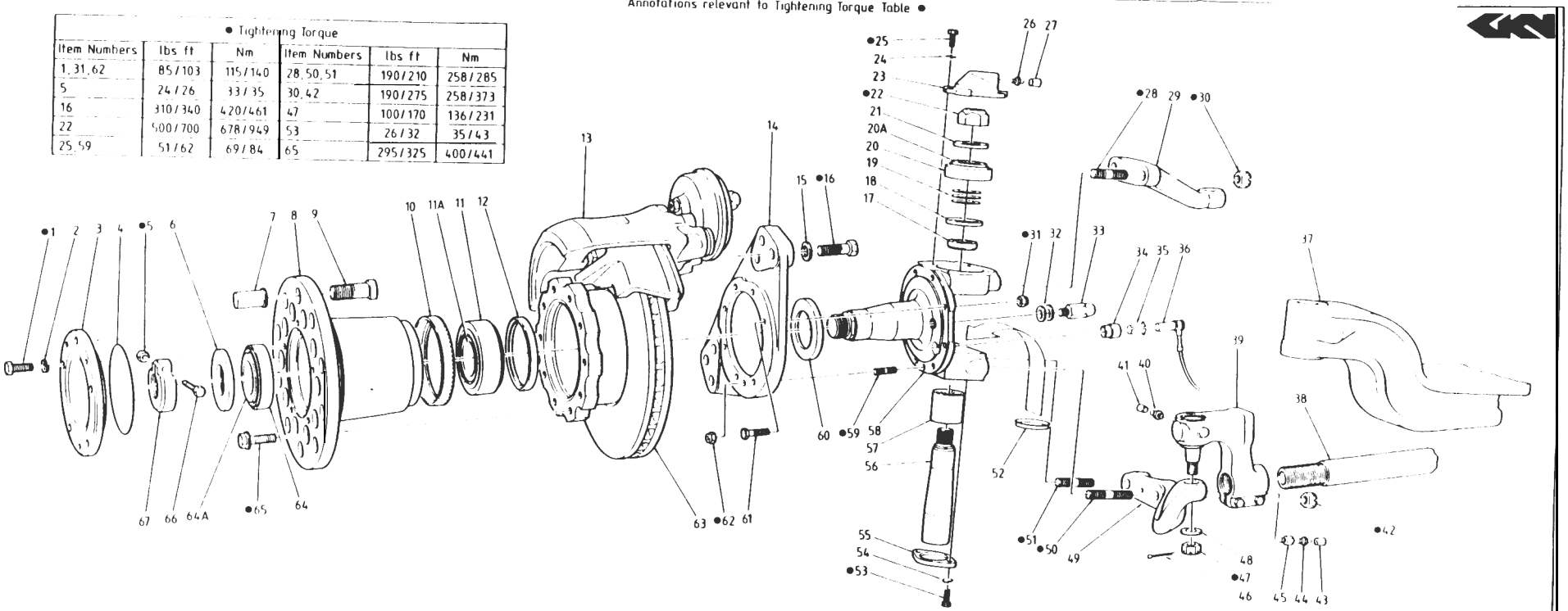

S82 DEAD STEER HUB UNIT

© 1994 GKN AXLES LIMITED KIRKSTALL DIVISION

Illustration No F47

PARTS AND SERVICE INSTRUCTIONS FOR TS5 HUB UNIT WITH KNORR AIR DISC BRAKE

ILLUSTRATION No.H86

MANUAL SECTION C

PARTS AND SERVICE INSTRUCTIONS FOR TYPE TS5 HUB UNIT

DESCRIPTION

The hub unit consists of a stub axle fitted with Knorr air disc brakes.
The hub taper roller bearings are of a generous size and, adjusted by means of a special split nut with pinch bolt arrangement.

SECTION 1 ROUTINE MAINTENANCE

1.1 Hub bearing adjustment

a) An inspection should be made after the first 3,000 miles (4,800 km) and then at intervals of 25,000 miles (40,000km). With the wheels raised they should revolve quite freely without roughness.

b) Hub bearings should have a slight end float movement within the limits 0.0005" to 0.002" when rocked forwards and backwards on axle stub.
See section 8, page B9 if any adjustment is required.

SECTION 2 TO REMOVE HUB UNIT

2.1 Chock the appropriate wheels.
2.2 Whilst road wheels are still on ground, loosen wheel nuts (7 posn.) sightly.
2.3 Raise vehicle, remove road wheel nuts and remove road wheels.
2.4 Disconnect air line from brake caliper (12).
2.5 Remove brake caliper setscrews with washers (15 & 14) then lift off brake caliper assembly (1 2).
2.6 Remove hub cap setscrews and washers (1 & 2).
2.7 Remove hub cap (3) with 'O' ring (4) then discard 'O' ring.
2.8 Remove hub bearing pinch bolt nut (5) and boft (26), then remove hub bearing nut (27) along with hub bearing washer (6).
2.9 Remove hub (8) complete with its bearings (11/1 1A & 24/24A) and oil seal (12) then fii off outer bearing cone (24A).
2.10 Remove oil seal (12) and inner bearing cone (11 A) from hub (8)
2.11 Drive out hub bearing cups (11 & 24) from hub (8).
2.12 If hub bearing distance piece (oil seal wear sleeve) (16) shows signs of wear or corrosion it must be removed and replaced with a new part

SECTION 3 TO ASSEMBLE THE HUB

Prior to assembly, pack hub bearing (11/11A & 24/24A) with lithium base grease (Shell Retinax LX or equivalent) using a bearing packer or manually knead grease between rollers, race and cage.

3.1 Fit hub bearing distance piece (16) onto swivel stub axle (1 7).

3.2 Fit inner and outer hub bearing cups (11 & 24) onto their bores in hub (8).

3.3 Fill hub cavity with lithium base grease (Shell Retinax LX or equivalent) from outer bearing shoulder to centre line of inner bearing cone as shown in figure no.1.

TP175

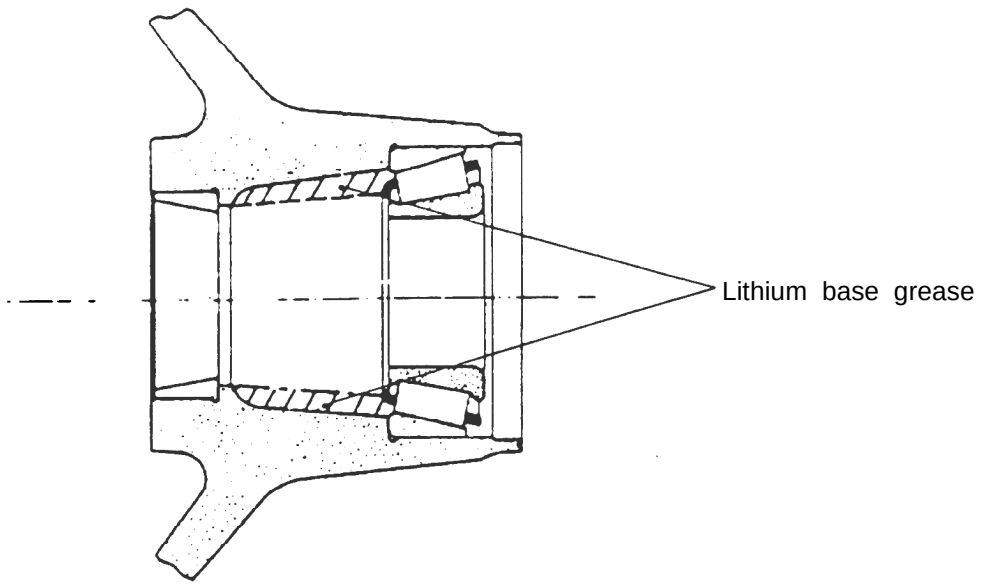

Flg.No.1

3.4 Fit inner hub bearing cone (11 A) into its cup in hub (8).

3.5 Press hub oil seal ({2) into position in hub (8) using a suitable bumper tool which locates on outer part of seal to prevent damage on assemble.

3.6 Fit hub assembly onto swivel stub axfe (1 7).

3.7 Fit outer bearing cone (24A) into its cup (24).

3.8 Fit hub bearing washer and hub bearing nut (6 & 27). Tighten nut hard with the aid of a small tommy bar just enough to take up bearing slack.

3.9 Fit hub bearing nut pinch bolt and nut (26 & 5), tighten finger tight.

SECTION 3 TO ASSEMBLE THE HUB Cont.

3.10 Adjust hub 'End Float' as follows :-
Rotate hub and using a hide faced mallet, knock hub backwards and forwards along axle arm to 'Shock Load' and thus settle bearings in position.

Note :- It is very important to rotate and ' shock load ' the hub because :-

a) The rotation seines to ensure that bearing rollers settle into running in their correct tracks.
b) The' Shock Load ' is to ensure that bearings are seated correctly up to their abutment shoulders.
Test the tightness of hub bearing nut (27), if loose, re-tighten hard.
Rotate and' Shock Load ' the hub again.
Continue this procedure until hub bearing nut (27) cannot be tightened further after hub has been rotated and' Shock Loaded'.
Back off hub bearing nut (27) by approximately 30•then rotate again and knock hub outward along axle arm to release bearings.
Mount a dial indicator on hub flange (8) and position its pointer on end of axle stub (see fig. no. 2.).
Rock the hub backwards and forwards along axle arm, taking a reading on dial indicator.

The correct' End Float' is between limits 0.0005 to 0.002 (0.013 to 0.050 mm).

Tighten the hub bearing pinch bolt nut (5) to 24-26 Ibs ft. (33 - 35 Nm.).

Check the' End Float' again, using above procedure, and adjust if outside specified limits.

TP310

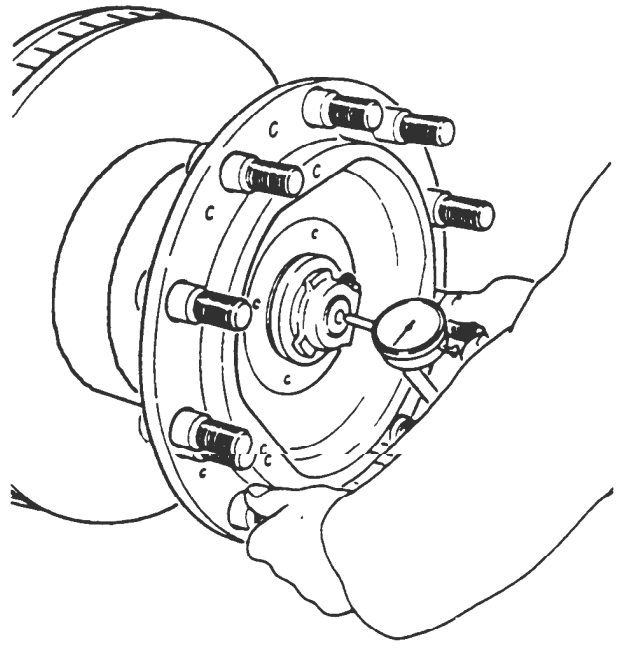

To adjust hub 'End Float'

Fig. No.7.

SECTION 3 TO ASSEMBLE THE HUB Cont.

3.11 Smear the inside of hub cap (3) with a thin coating of grease as indicated in lubrication section A, page no.A3.

3.12 Clean hub cap and hub mating faces (3 & 8) with Loctite Superclean Safety Solvent no.706 or other suitable chlorinated solvent then apply a complete 1/8" bead of Loctite Superflex (black) around mating face of hub cap (3). See fig. no. 3.

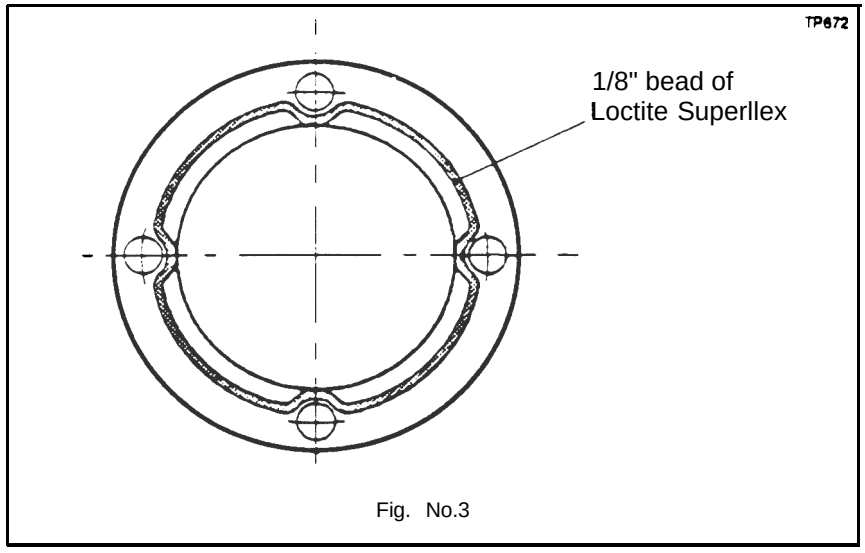

Fig. No.3

3.13 Fit hub cap along (3) within 5 minutes of applying sealant then secure with hub cap setscrews and washers (1 & 2) tightening setscrews to 85-103 lbs. ft. (115 - 140 Nm.).

SECTION 4 FINAL ASSEMBLY

4.1 Refit road wheels, securing with wheel nuts (7 pan.). Tighten nuts to 475-525 lbs. ft. (644 -712 Nm).

4.2 Lower vehicle to ground.

4.3 Remove chocks and jacks.

TORQUE TABLE FOR TS5 HUB UNIT WITH KNORR AIR DISC BRAKE

Item No	Description	Torque
1	Hub cap setscrew	85 - 103 lbs. ft. (115 - 140Nm)
5	Hub pinch bolt nut	24 - 26 lbs. ft. (33 - 35 Nm)
7	Wheel nut	475 - 525 lbs. ft. (644 - 712 Nm)
15	Brake caliper setscrew	310 - 340lbs. ft. (420 - 461 Nm.)
18	Axle stub stud	95 - 105lbs.ft. (129 - 142Nm.)
20	Axle Stub nut	210 - 256lbs.ft. (285 - 347Nm.)
21	Caliper bracket nut	85 - 103lbs.ft. (115 - 140Nm.)
22	Caliper bracket nut	85 - 103lbs.ft. (115 - 140Nm.)
59	Caliper bracket stud	51 - 62lbs. ft. (69 - 84Nm.)

PARTS LIST FOR TS5 HUB UNIT (WITH KNORR DISC BRAKE)

CUSTOMER PREVOST **AXLE ASSEMBLY No.33537**

ILLUSTRATION No. H86

Item No	Description		Qty.Per Axle	Part No.	Recommended Spares Holding Per 25 Axles	50 Axles	100 Axles
1	Hub cap setscrew		8	ML6012/35S	8	8	16
2	Hub cap spring washer		8	ML5712/1	8	8	16
3	Hub cap		2	F4651/29	2	4	6
4	Hub cap 'O' ring		2	R9434/149	2	2	4
5	Bearing nut pinch nut		2	SL228/4	2	4	6
6	Hub bearing 'D' washer		2	7786/30	2	4	6
7	Wheel stud protective cover		20	R8464/161			
8	Hub		2	F4651/28	2	4	6
9	Wheel stud RH		10	F4561/75	30	60	120
	Wheel stud LH		10	F4561/76	30	60	120
10	Hub Inner bearing cup	Kit no.	2	SL289/293	4	8	16
10A	Hub Inner bearing cone	17899/2	2	SL289/294	4	8	16
11	Hub oil seal		2	7786/32	4	8	16
12	Brake caliper RH		1	SM486/4K	1	2	3
	Brake caliper LH		1	SM486/5K	1	2	3
13	Caliper mounting bracket		2	R9855/65	2	4	6
14	Brake caliper retaining washer		12	N70040	12	12	24
15	Brake caliper retaining bolt		12	N70251	12	12	24
16	Hub bearing distance piece		2	7816/26	2	4	6
17	Axle stub		1	R9855/238	1	2	3
18	Chassis mounting stud		16	SB6416/42V	16	16	32
19	Chassis mounting washer		16	ML5716/1	16	16	32
20	Chassis mounting nut		16	ML50/61X	16	16	32
21	Brake caliper bracket stud		16	SL785/110	16	16	32
22	Brake caliper bracket nut		16	SL228/6	16	16	32
23	Brake disc		2	F4651/88	2	4	6
24	Hub outer bearing cup	Kit no.	2	SL289/107	4	8	16
24A	Hub outer bearing cone	17899/1	2	SL289/286	4	8	16
25	Brake disc capscrew		20	ML7916/50X	20	20	40
26	Bearing nut pinch bolt		2	SL553/17	2	4	6
27	Hub bearing nut		2	7786/77A	2	4	6

Notes

Drawn by D J Highton February '94

Annotations relevant to Tightening Torque Table ●

● Tightening Torque					
Item Numbers	lbs ft	Nm	Item Numbers	lbs ft	Nm
1, 22	85/103	115/140	20	210/256	285/347
5	24/26	33/35	21	51/62	69/84
15	310/340	420/461	25	295/385	400/522
18	95/105	129/142			

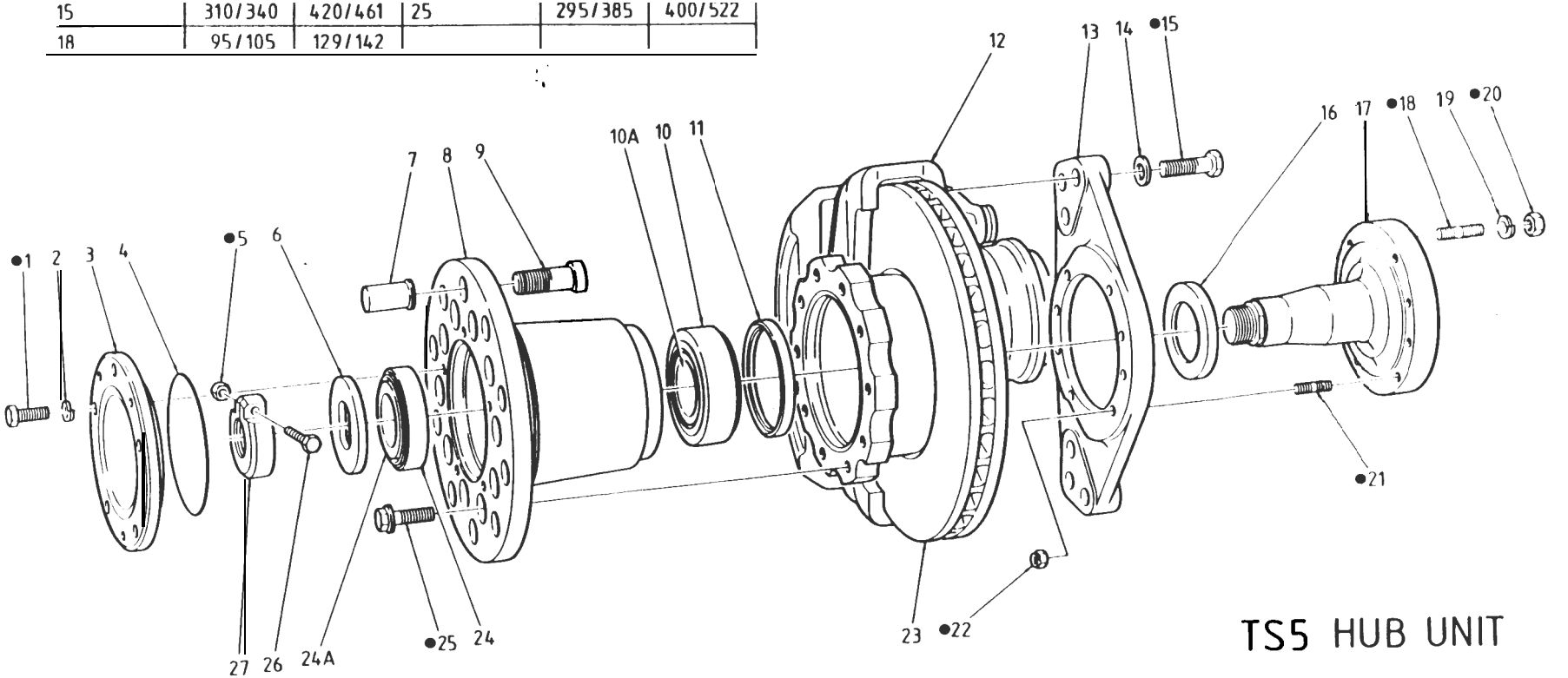

TS5 HUB UNIT

© 1994 GKN AXLES LIMITED KIRKSTALL DIVISION

Illustration No H86

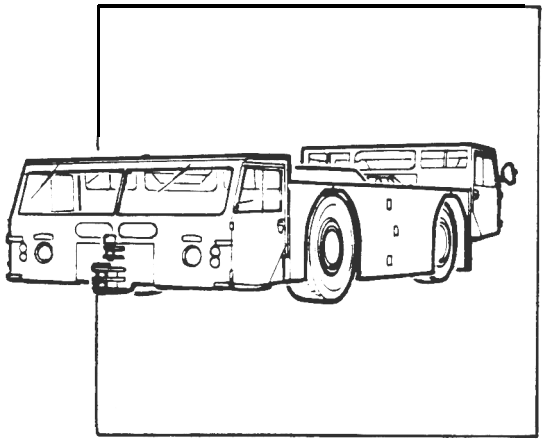

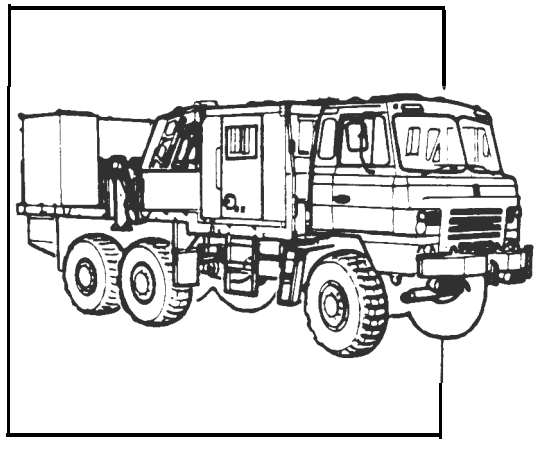

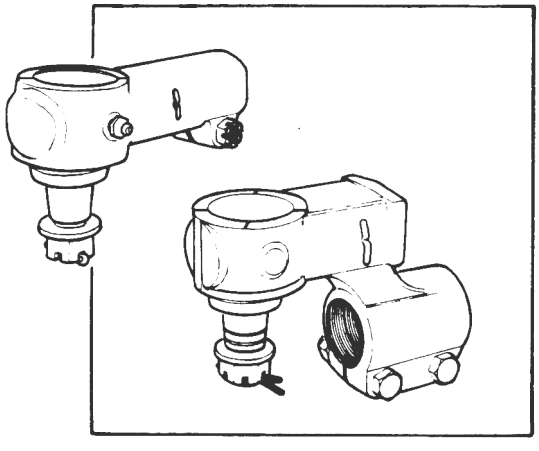

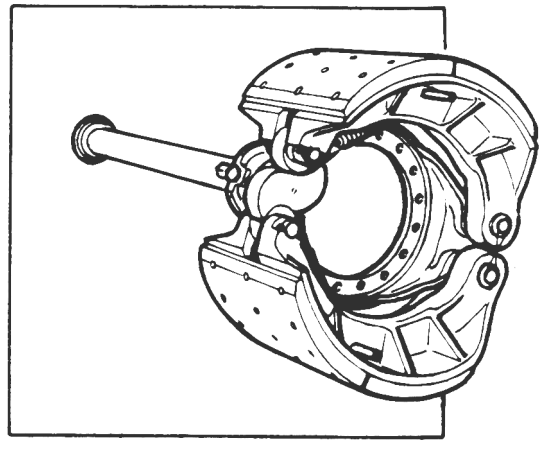

GKN AXLES LIMITED

KIRKSTALL DIVISION

Abbey Road • Kirkstall • Leeds LS5 3NF • England

Tel: 0532584611 Telex: 55109

Facsimile No 0532586097 (CCIT G3)

GKN AXLES LIMITED

KIRKSTALL DIVISION

PARTS AND SERVICE MANUAL FOR
AXLES FITTED TO
PREVOST 6 X 2 COACH

MANUAL No.1604 Issue A

SECTION 11:REAR AXLES

CONTENTS

1. DRIVE AXLE 11-2
- 1.1 Description 11-2
- 1.2 Drive Axle Lubrication 11-2
- 1.3 Maintenance 11-2
  - 1.3.1 Checking and Adjusting the Oil Level 11-3
  - 1.3.2 Draining and Replacing the Oil 11-3
  - 1.3.3 Speed Sensors (Anti-Lock Brake System, ABS) 11-3
- 1.4 Removal and Replacement 11-3
  - 1.4.1 Removal 11-3
  - 1.4.2 Replacement 11-4
- 1.5 Disassembly and reassembly 11-4
- 1.6 Gear Set Identification 11-4
- 1.7 Adjustments 11-4
- 1.8 Fastener Torque Chart 11-4
- 1.9 Tire Matching 11-4
- 1.10 Drive Axle Alignment 11-5
  - 1.10.1 Description 11-5
  - 1.10.2 Procedure 11-5
- 1.11 Axle Shaft Sealing Method 11-6

2. TAG AXLE 11-7
- 2.1 Description 11-7
- 2.2 Oil Lubricated Wheel Bearings 11-8
- 2.3 Removal and Replacement 11-8
  - 2.3.1 Removal 11-8
  - 2.3.2 Replacement 11-9
- 2.4 Tag Axle Alignment 11-9
  - 2.4.1 Description 11-9

3. SPECIFICATIONS 11-10

LIST OF ILLUSTRATIONS

FIG. 1: DIFFERENTIAL AXLE HOUSING BOWL 11-2
FIG. 2: DRIVE AXLE ALIGNMENT 11-6
FIG. 3: AXLE SHAFT INSTALLATION 11-7
FIG. 4: OIL FILL CAP 11-8

1. DRIVE AXLE

1.1 Description

The Rockwell drive axle is equipped with a single reduction standard carrier mounted in front of the axle housing. The carrier has a hypoid drive pinion, a ring gear set and gears in the differential assembly.

A straight roller bearing (spigot) is mounted on the head of the drive pinion. All other bearings in the carrier are tapered roller bearings. When the carrier operates, there is a normal differential action between the wheels all the time.

Several speed ratios are available for the drive axle. These ratios depend upon the motor and transmission. Also, special applications may suggest slightly different gear ratios.

1.2 Drive Axle Lubrication

Additional lubrication information is covered in "Field Maintenance Manual No. 5" annexed to the end of this section. During initial stage of normal operation, tiny metal particles originating from moving parts can be found on mating surfaces. These particles are carried by the lubricant through the assembly and act as lapping compound which accelerates wear of all parts. To ensure maximum life of the differential and prevent premature failure, the original "factory fill" lubricant should be drained. Change break-in oil after 3,000 miles (4 800 km) of initial operation (drain the unit while it is still warm from operation), in accordance with the lubrication and servicing schedule.

Change differential oil and clean the breathers, the magnetic fill and drain plug, every 100,000 miles (160 000 km) or once every two years, whichever comes first. Use Multigrade gear oil MIL-L-2105-D. Use the 75W90 gear oil for northern climates and the 80W140 for southern climates. In extreme conditions, or for better performance, fill with synthetic gear oil.

Check oil level and if necessary add oil every 6,250 miles (10 000 km) or twice a year, whichever comes first (Fig. 1).

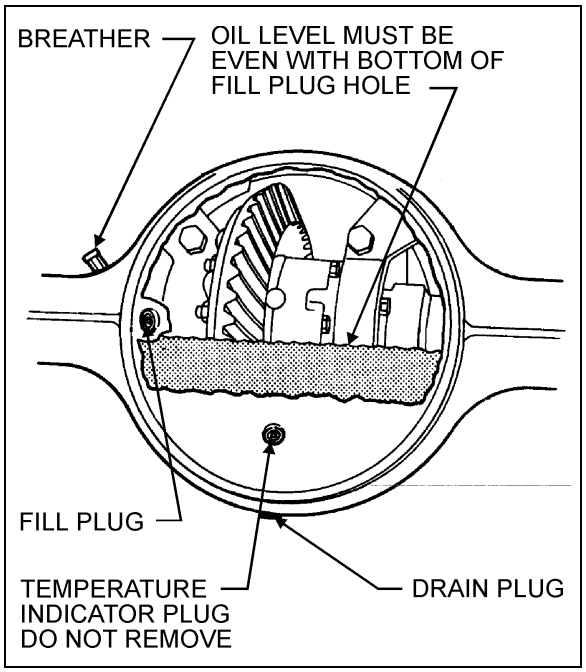

FIGURE 1: DIFFERENTIAL AXLE HOUSING BOWL 11007

1.3 Maintenance

Proper vehicle operation begins with preventive maintenance, such as good differential use. The most common types of drive axle carrier failures are spinout, shock, fatigue, overheating and lubrication. Avoid neglecting these points as it would be the first step to improper maintenance, expensive repairs, and excessive downtime.

Inspect the pinion oil seal, axle shaft flange and carrier housing gaskets for evidence of lubricant leakage. Tighten the bolts and nuts, or replace the gaskets and seals to correct leaks. Maintenance of the axle mountings consists primarily in a regular and systematic inspection of the air suspension units and radius rods, as directed in Section 16, "Suspension".

1.3.1 Checking and Adjusting the Oil Level

1. Make sure the vehicle is parked on a level surface.

Caution: *Check the oil level when the axle is at room temperarure. When hot, the oil temperature may be 190 F (88 C) or more and can cause burns. Also, a correct reading is not obtained when the axle is warm or hot.*

2. Make sure the axle is "cold" or at room temperature.

3. Clean the area around the fill plug. Remove the fill plug from the differential axle housing bowl.

4. The oil level must be even with the bottom of the hole of the fill plug.

   a. If oil flows from the hole when the plug is loosened, the oil level is high. Drain the oil to the correct level.

   b. If the oil level is below the bottom of the hole of the fill plug, add the specified oil.

5. Install and tighten the fill plug to 35-50 lbf•ft (48-67 N•m).

1.3.2 Draining and Replacing the Oil

1. Make sure the vehicle is parked on a level surface. Put a large container under the axle.

Note: *Drain the oil when the axle is warm.*

2. Remove the drain plug from the bottom of the axle. Drain and discard the oil.

3. Install and tighten the drain plug to 35-50 lbf•ft (48-67 N•m).

4. Clean the area around the fill plug. Remove the fill plug from the differential housing bowl.

5. Add the specified oil until the oil level is even with the bottom of the hole of the fill plug. Allow the oil to flow through the axle and check the oil level again (lube capacity 41 pints [13,3 liters]).

6. Install and tighten the fill plug to 35-50 lbf•ft (48-67 N•m).

1.3.3 Speed Sensors (Anti-Lock Brake System, ABS)

For removing and installing the rockwell in-axle speed sensors (for anti-lock brake systems, ABS), refer to Rockwell technical bulletin annexed at the end of this section.

1.4 Removal and Replacement

The following procedure deals with the removal of the drive axle assembly and its attachments as a unit. The method used to support the axle during removal and disassembly depends upon local conditions and available equipment.

1.4.1 Removal

1. Raise vehicle by its jacking points on the body (see Section 18, "Body" under heading "16. VEHICLE JACKING POINTS"). Place jack stands under frame. Remove drive axle wheels (if required, refer to Section 13, "Wheels, Hubs and Tires".

2. Exhaust compressed air from the air supply system by opening the drain cock of each air reservoir.

3. Disconnect the propeller shaft as directed in Section 9, "Propeller Shaft", of this manual.

4. On both sides of the vehicle, unscrew fasteners retaining front wheelhouse plastic guards, and remove them from vehicle.

5. Disconnect both height control valve links from air spring mounting plate brackets.

6. Remove cable ties securing the ABS cables (if vehicle is so equipped) to service brake chamber hoses. Disconnect the ABS cable plugs from connectors on the differential carrier.

Note: *When you remove cable ties to ease operation, remember to replace them afterwards.*

7. Disconnect the brake chamber hoses. Position the hoses so they will not be damaged when removing the axle.

8. Install jacks under the axle jacking points to support the axle weight.

9. Remove the four shock absorbers as outlined in Section 16, "Suspension" under heading "3.2 SHOCK ABSORBER REMOVAL".

10. Remove the sway bar.

11. Remove the lower and upper longitudinal radius rod supports from vehicle subframe as outlined in Section 16, "Suspension", under heading "4.2 RADIUS ROD REMOVAL".

Note: *The upper mounting bolt of each lower radius rod support is accessible from the last baggage compartment.*

12. Remove the transversal radius rod support from the vehicle subframe.

13. Remove the two retaining nuts from each of the four air bellows lower mounting supports.

14. Use the jacks to lower axle. Carefully pull away the jacks axle assembly from under the vehicle.

1.4.2 Replacement

Reverse removal procedure to reinstall drive axle.

Note: *Refer to Section 16, "Suspension" for suspension components proper torques tightening.*

1.5 Disassembly and Reassembly

Disassembly and reassembly procedures are explained under applicable headings in "Rockwell Field Maintenance Manual, No. 5", annexed to this section.

1.6 Gear Set Identification

Gear set identification is explained under applicable heading in "Rockwell Field Maintenance Manual No. 5", annexed to this section.

1.7 Adjustments

Adjustments are explained under applicable headings in Rockwell Field Maintenance No. 5, annexed to this section.

1.8 Fastener Torque Chart

A differential fastener torque chart is provided in Rockwell Field Maintenance No. 5, annexed to this section.

1.9 Tire Matching

Drive axle tire matching is explained under the applicable heading in Section 13, "Wheels, Hubs and Tires" of this manual.

1.10 Drive Axle Alignment

1.10.1 Description

For* drive axle alignment *specifications, refer to paragraph "3. SPECIFICATIONS" in this section.

The drive axle alignment consists in aligning the axle according to the frame. The axle must be perpendicular to the frame. The alignment is achieved with the use of shims inserted between the lower longitudinal radius rod supports and the frame.

Drive axle alignment is factory set and is not subject to any change, except if the vehicle has been damaged by an accident or if there are requirements for replacement.

Caution: *If this setting is altered significantly, the vehicle will produce offset tracking (dog tracking).*

If the axle has been removed for repair or servicing and if all the parts are reinstalled exactly in the same place, the axle alignment is not necessary. However, if the suspension supports have been replaced or altered, proceed with the following instructions to verify or adjust the drive axle alignment.

1.10.2 Procedure

1. Park vehicle on level floor, then chock front vehicle wheels.

2. Using two jacking points (which are at least 30 inches [76 cm] apart) on drive axle, raise the vehicle sufficiently so that wheels can turn freely at about ½ inch from ground. Secure in this position with safety stands, and release parking brake.

3. Using an optical toe and tracking system installed on each side of the drive axle, fix and position the projector in the center of the wheel. Measure the distance on each side of projector mounting rods. Distance should be equal on both sides. If not, adjust the projector.

4. Install a target board on each side of the vehicle, at the level of the last baggage compartment front wall (see installation in Fig. 2).

5. Connect the projectors and set to zero. Rotate the wheel and set projectors to zero at four opposite positions. It is important to have a zero marking when rotating the wheel in order to eliminate wheel run-out.

6. Aim projector on the target board. Measure distance between target center line (provided by the projector) and the frame post located immediately beside the target board.

   Record measurent, then repeat procedure on the other side (Fig. 2). Dimensions obtained are identified RR on rear right-hand side and RL on rear left-hand side.

7. Move the target boards to the front of vehicle, i.e. at 13 feet towards the first target location (Fig. 2) for installation.

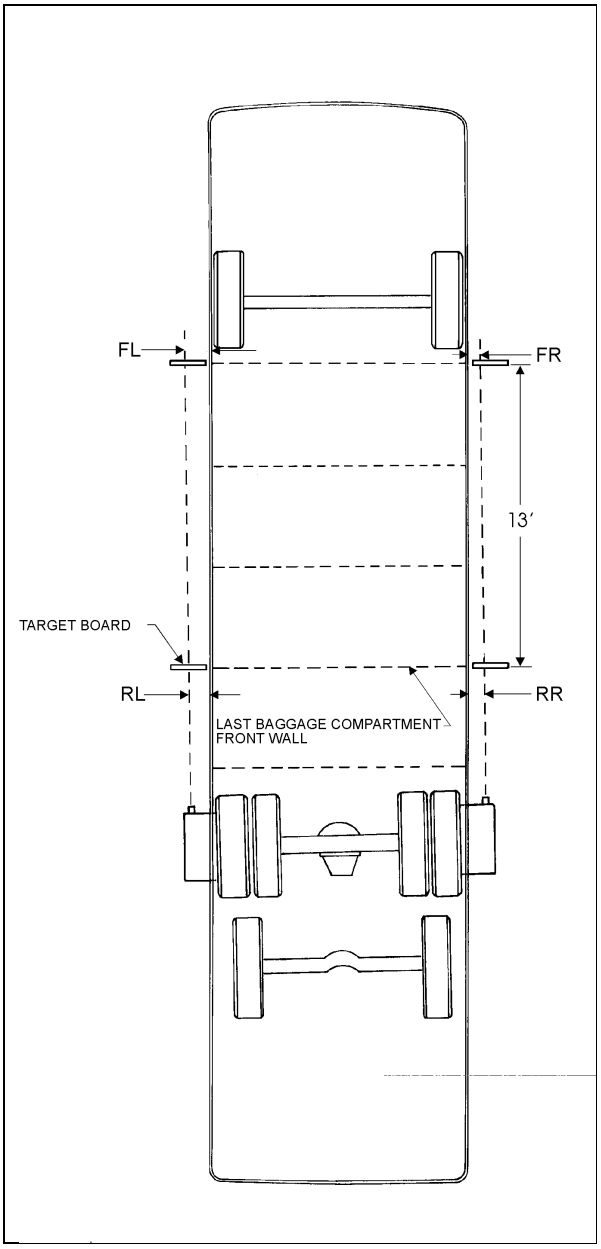

FIGURE 2: DRIVE AXLE ALIGNMENT 11008

8. Aim the projector on the target board, then measure the distance between target centerline (provided by the projector) and the frame post located immediately beside the target board. Record measurent, then repeat on the other side. Dimensions obtained are identified FR on front right-hand side and FL on front left-hand side.

9. Subtract measurement taken at rear of the vehicle from measurement taken at front of the vehicle on the same side. Record results. Repeat previous operation on other side of vehicle. Record results.

FR - RR = RESULT "A"
FL - RL = RESULT "B"

10. The results on either side must be less than or equal to 5/8 inch (16 mm) for H3-41 and 9/16 inch (14 mm) for H3-45 vehicles. These results are obtained with a distance of 13 feet between the two target board locations. If one or both results exceed the value specified for the vehicle, corrective action should be taken with respect to axle position.

11. Correct axle position by inserting a shim between the lower longitudinal radius rod support and the frame, on right or left side of vehicle, according to the previous results.

Note: *Refer to Section 16, "Suspension", for proper torque tightening of the longitudinal radius rod support nuts.*

12. Repeat steps 6 to 10 to ensure that axle is truly perpendicular to the frame.

1.11 Axle Shaft Sealing Method

The following method is to be used to ensure that axle shaft installation is fluid-tight:

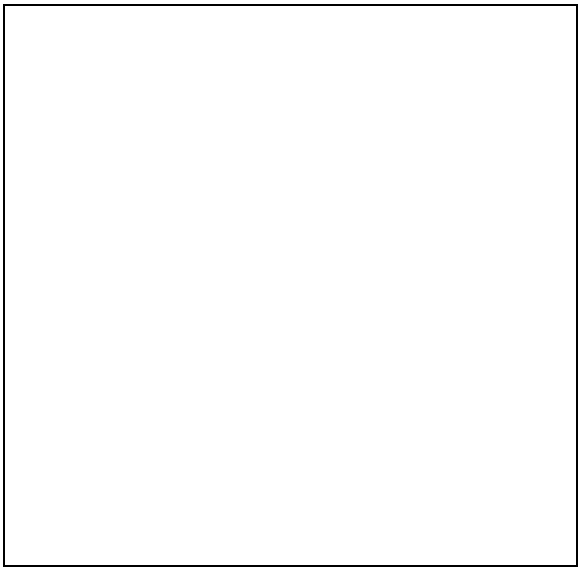

FIGURE 3: AXLE SHAFT INSTALLATION 11003

1.....Silicone sealant*
2.....Axle shaft
3.....Gasket
4.....Wheel hub

1. Clean the mounting surfaces of both the axle shaft flange and wheel hub where silicone sealant will be applied. Remove all old silicone sealant, oil, grease, dirt and moisture. Dry both surfaces.

2. Apply a continuous thin bead of silicone sealant* (Prévost P/N 680053) on the mounting surfaces and around the edge of all fastener holes of both the axle shaft flange and wheel hub.

Warning: *Carefully read cautions and instructions on the tube of silicone sealant and its packing.*

* *GENERAL ELECTRIC Silicone Rubber Adhesive Sealant RTV 103 Black.*

3. Assemble components immediately to permit the silicone sealant to compress evenly between parts.

   a. Place a new gasket, then install the axle shaft into the wheel hub and differential carrier. The gasket and flange of the axle shaft must fit flat against the wheel hub.

   b. Install the tapered dowels at each stud and into the flange of the axle shaft. Use a punch or drift and hammer if needed.

   c. Install the lock washers and nuts on the studs. Tighten nuts to the correct torque value.

Note: *Torque values are for fasteners that have a light application of oil on the threads (refer to Rockwell Maintenance Manual).*

9/16-18plain nut:110 - 165 bf•ft(149 - 224 N•m)

5/8-18 plain nut: 150 - 230 lbf•ft(203 - 312 N•m)

2. TAG AXLE

2.1 Description

The tag axle is located behind the drive axle. It carries a single wheel and tire on each side. The standard system allows unloading of the tag axle air springs without raising the axle, while the optional system enables unloading and raising of the tag axle (refer to Operator's Manual for details about control location). Both these systems have been designed for the following purposes:

1. Shortening of wheelbase, thus allowing tighter turning in tight maneuvering areas such in a parking lot or when making a sharp turn.
2. Transferring extra weight and additional traction to the drive wheels on slippery surfaces.

Caution: *Never exceed 30 mph (50 km/h) with tag axle up or unloaded for normal driving.*

The tag axle service brakes operate only when the axle is in normal driving (loaded) position.

2.2 Oil Lubricated Wheel Bearings

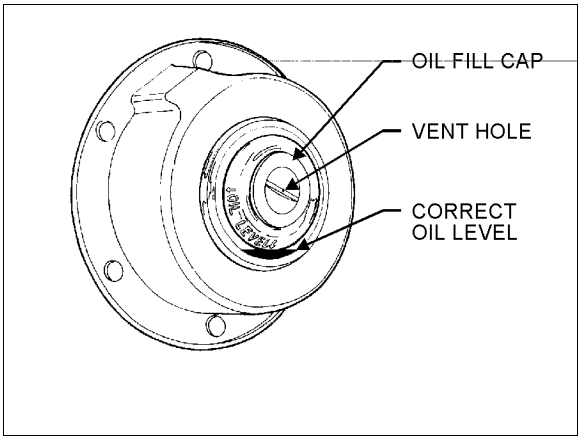

FIGURE 4: Oil Fill Cap 13003

The oil level on the tag axle wheel bearings must be maintained to the level mark in the cap. The level is determined by a line, indicated by arrows, that is incorporated to the plastic lens and passes underneath the words "OIL LEVEL" (Fig. 4). To check oil level after vehicle has been driven, wait at least 15 minutes to ensure that oil has settled.

2.3 Removal and Replacement

The following procedure deals with the removal of the tag axle assembly along with the suspension components. The method used to support the axle and suspension components during removal and disassembly depends upon local conditions and available equipment.

2.3.1 Removal

1. Raise vehicle by its jacking points on the body (see Section 18, "Body" under heading "16. VEHICLE JACKING POINTS"). Place jack under frame. Remove drive axle wheels (if required, refer to Section 13, "Wheels, Hubs and Tires").
2. Exhaust compressed air from the air supply system by opening the drain cock of each air reservoir.
3. Install jacks under tag axle jacking points to support the axle weight.
4. Only for vehicle equipped with the retractable tag axle. Disconnect tag axle lifting chain collars from lower longitudinal radius rods
5. Remove the propeller shaft as directed in Section 9, "Propeller Shaft", of this manual.
6. Disconnect the tag axle brake chamber hoses. Position the hoses so they will not be damaged when removing axle.
7. Disconnect hose from the air spring upper mounting plate.
8. Remove the two shock absorbers as outlined in Section 16, "Suspension", under "3.2 SHOCK ABSORBER REMOVAL".
9. Disconnect the lower longitudinal radius rods as outlined in Section 16, "Suspension", under "4.2 RADIUS ROD REMOVAL".
10. Disconnect the transversal radius rod.
11. Disconnect the upper longitudinal radius rod.
12 Remove the retaining nuts of the air bellows from each of the two upper mounting plates.
13. Use the jacks to move the axle forward to clear the axle of the transmission. Lower the axle.

Caution: *On vehicles equipped with an automatic transmission (with or without the output retarder), move tag assembly very carefully. Pay special attention to the U-shaped section, as the transmission end components may be easily damaged through a false maneuver.*

2.3.2 Replacement

Reverse removal procedure to reinstall tag axle.

Note: *Refer to Section 16, "Suspension", for proper torque tightening of suspension components.*

2.4 Tag Axle Alignment

2.4.1 Description

For tag axle alignment specifications, refer to paragraph "3. SPECIFICATIONS" in this section.

The tag axle alignment consists in aligning the tag axle parallel to the drive axle position. Before aligning the tag axle, proceed with the drive axle alignment (see paragraph "1.10 DRIVE AXLE ALIGNMENT"). Tag axle alignment is achieved with the use of shims inserted between the lower longitudinal radius rod supports and axle. Tag axle alignment is factory set and is not subject to any change, except if vehicle has been damaged by an accident or if there are requirements for part replacement.

Caution: *If this setting is altered significantly, it will cause excessive wear.*

If axle has been removed for repair or servicing and if all parts are reinstalled exactly in the same place, axle alignment is not necessary. However, if the suspension supports have been replaced or have changed position, proceed with the following instructions to verify or adjust the tag axle alignment.

3. SPECIFICATIONS

Drive Axle

Make .....Rockwell International
Drive track..... 76.7 inches (1 949 mm)
Gear type .....Hypoid
Axle type..... Full floating
Lube capacity ..... 41 pints (19,3 liters)

Drive axle ratio

w/11.1L - PS130-6B and w/12.7L - PS145-7A
3.21:1 Standard
3.07:1 Optional
World Transmission
4.88:1 Standard
4.56:1 Optional

Drive Axle Alignment Specifications		
Off Tracking	Specifications	Inst.
H3-41 (Both sides)	5/8 inch max. on 13 feet	Projector
H3-45 (Both sides)	9/16 inch max. on 13 feet	Projector

Note: *The drive axle alignment consists in aligning the axle according to the frame. The axle must be perpendicular to the frame.*

Tag Axle

Make .....Prévost
Type.....GKN TS5 hub unit
Rear track .....83.6" (2 124 mm)

Tag Axle Alignment Specifications			
Toe	Minimal	Nominal	Maximal
H3-41 and H3-45 (Both sides)	-3/64	0	+3/64

Note: *The tag axle alignment consists in aligning the tag axle parallel to the drive axle position.*

Remove the Speed Sensor

⚠ *WARNING*

The Rockwell Speed Sensor is part of an electrical system. When you work on the speed sensor, take the same precautions as you must take with any electrical system to avoid serious personal injury. As with any electrical system, there is a danger of electrical shock or sparks which can ignite flammable substances. Always disconnect the battery ground cable before working on the speed sensor or electrical system.

Wear safe eye protection to help prevent serious personal injury when servicing the vehicle.

Do not work under a vehicle that is supported only by jacks. Jacks can slip or fall over and cause serious personal injury. Support the vehicle with jack stands.

1. Follow steps 1 and 2 of Remove Differential Carrier From Axle Housing in Section 2, Disassembly, on page 4 of Maintenance Manual No. 5.
2. Shut off the vehicle ignition.
3. Disconnect the ground cable from the battery.

⚠ *CAUTION*

Do not disconnect the sensor plug from the connector by pulling the sensor extension cable. Damage to the plug will occur and cause an open circuit. Always disconnect the sensor by pulling the plug housing.

4. Disconnect the left-hand and right-hand sensor plugs from the connectors. See **Figures 1 and 3** for the location of the parts.

In one action, hold the plug, press the lock tab on the top of the plug housing and pull the plug from the connector. **Figure 3.**

Figure 3

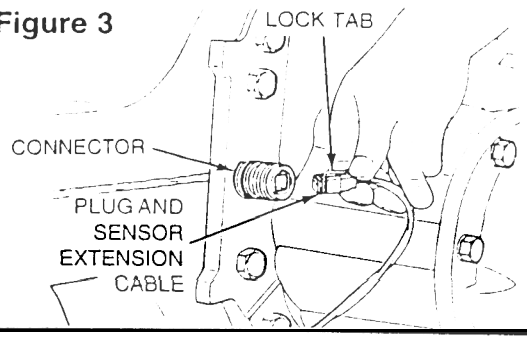

NOTE:

Before continuing on, perform the following Sensor Continuity Test.

Sensor Continuity and Short Tests

A. **Sensor Continuity Test** — Sensor resistance should be 1080 to 1320 ohm (Û) at 70”F; however, it may vary between 900 to 1500 ohm (Û) depending upon large temperature extremes. **Figure 4.**

Figure 4

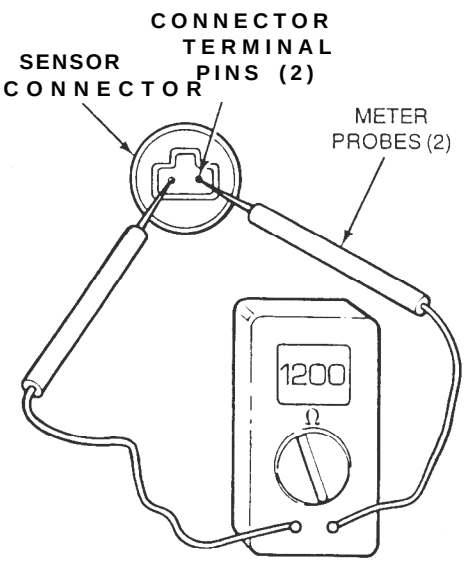

A TYPICAL DIGITAL MULTIMETER SET ON RESISTANCE MEASUREMENT

Remove the Speed Sensor

⚠ *WARNING*

The Rockwell Speed Sensor is part of an electrical system. When you work on the speed sensor, take the same precautions as you must take with any electrical system to avoid serious personal injury. As with any electrical system, there is a danger of electrical shock or sparks which can ignite flammable substances. Always disconnect the battery ground cable before working on the speed sensor or electrical system.

Wear safe eye protection to help prevent serious personal injury when servicing the vehicle.

Do not work under a vehicle that is supported only by jacks. Jacks can slip or fall over and cause serious personal injury. Support the vehicle with jack stands.

1. Follow steps 1 and 2 of Remove Differential Carrier From Axle Housing in Section 2, Disassembly, on page 4 of Maintenance Manual No. 5.
2. Shut off the vehicle ignition.
3. Disconnect the ground cable from the battery.

⚠ *CAUTION*

Do not disconnect the sensor plug from the connector by pulling the sensor extension cable. Damage to the plug will occur and cause an open circuit. Always disconnect the sensor by pulling the plug housing.

4. Disconnect the left-hand and right-hand sensor plugs from the connectors. See **Figures 1 and 3** for the location of the parts.

In one action, hold the plug, press the lock tab on the top of the plug housing and pull the plug from the connector. **Figure 3.**

Figure 3

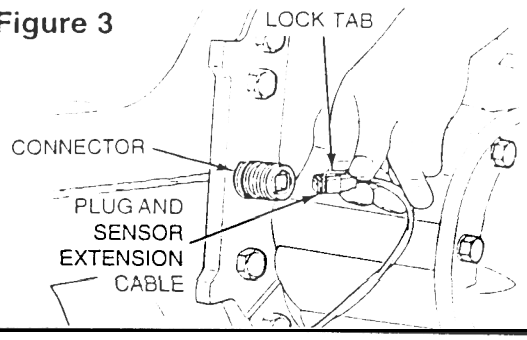

NOTE:

Before continuing on, perform the following Sensor Continuity Test.

Sensor Continuity and Short Tests

A. **Sensor Continuity Test** — Sensor resistance should be 1080 to 1320 ohm (Û) at 70”F; however, it may vary between 900 to 1500 ohm (Û) depending upon large temperature extremes. **Figure 4.**

Figure 4

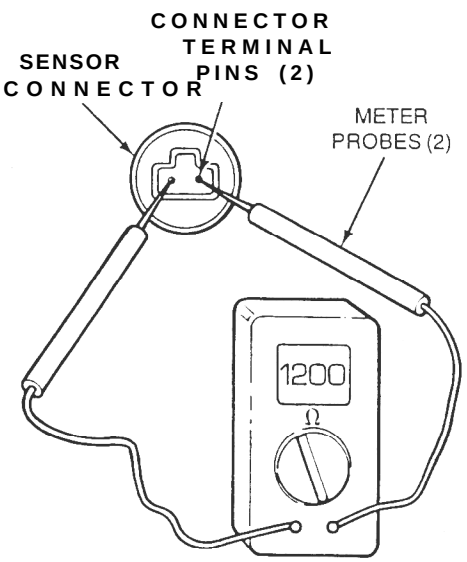

A TYPICAL DIGITAL MULTIMETER SET ON RESISTANCE MEASUREMENT

. **Sensor Short Test** — Test for short between sensor connector and carrier/ axle housing before removing and after installing the carrier into housing. **Figure 5.**

Figure 5

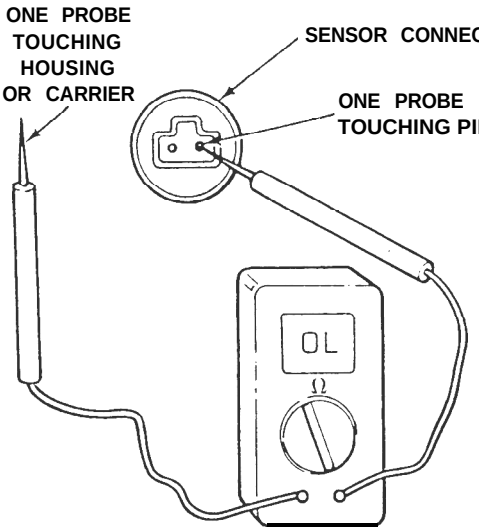

DIGITAL MULTIMETER

NOTE: THESE TESTS MAY BE PERFORMED WITH AN ANALOG MULTIMETER IF A DIGITAL ONE IS UNAVAILABLE.

RESISTANCE BETWEEN EACH PIN AND THE CARRIER (OR HOUSING) SHOULD BE: INFINITE (m)

OVERLOAD (OL)

5. If you are using Maintenance Manual No. 5, follow steps 3-15 of Remove Differential Carrier From Axle Housing in Section *2,* Disassembly, starting on page 4.

If you are using Maintenance Manual No. 5L, follow steps 1-6, 8-21 and 23 of Removing the Differential Carrier From the Axle Housing in Section 3, Disassembly, starting on page 7.

6. Remove the snap ring that holds the speed sensor in the adjusting ring of the differential bearing. Use snap ring pliers. **Figure 6.**

Figure 6

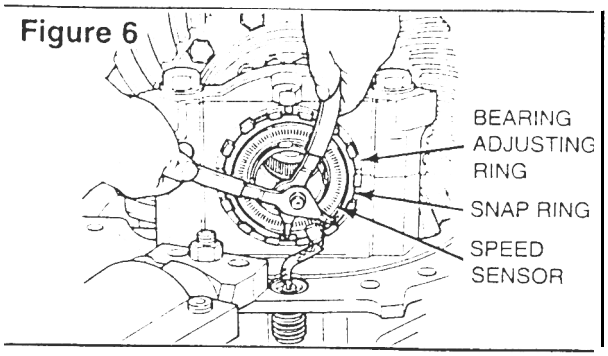

⚠ *CAUTION*

When you pry out the speed sensor from the bearing adjusting ring always position the screwdrivers under the metal tabs. Do not pry out the sensor from the plastic wire outlet area of the coil. Damage to the coil will occur.

7. Pry the speed sensor loose but do not completely remove it from the bearing adjusting ring. Use two screwdrivers to pry the sensor at the two opposite tabs. **Figure 7.**

Figure 7

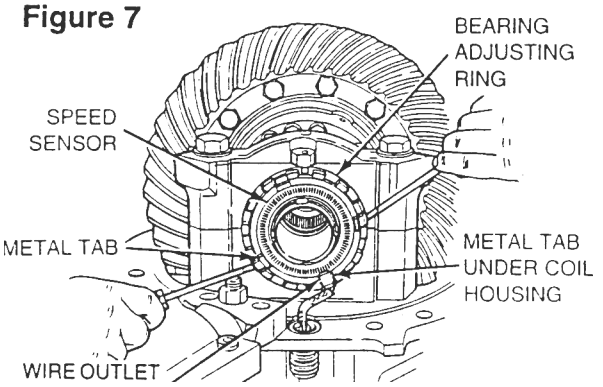

AREA OF COIL

Figure 12

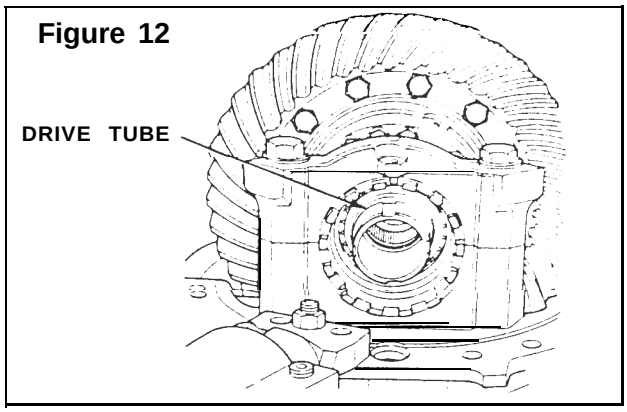

12, If you are using Maintenance Manual *No: 5,* continue with the following steps in Section 2, Disassembly:

- Page *5,* all steps of Remove The Differential and Ring Gear From The Carrier.
- Page 8, steps 1-4 of Disassemble The Differential And Ring Gear Assembly.

If you are using Maintenance Manual No: 5L, continue with the following steps in Section 3, Disassembly:

- Page 21, steps 1-7 of Removing The Main Differential Case And Ring-Gear Assembly.

Page 22, steps 1-3 of Disassembling The Main Differential Case And Ring Gear.

13.

the differential case half. **Figure 13.**

Figure 13

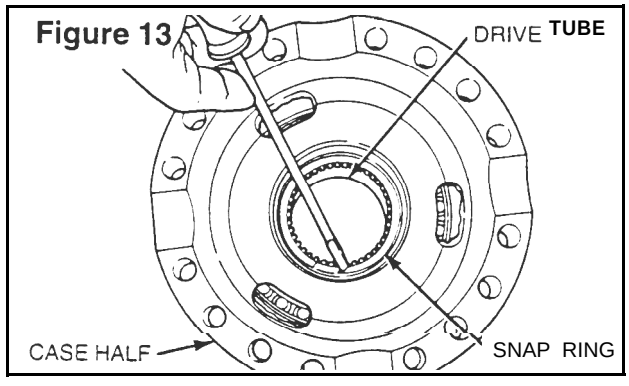

14. Lift out the back-up washer that is behind the snap ring, inside the differential case half. **Figure 14.**

Figure 14

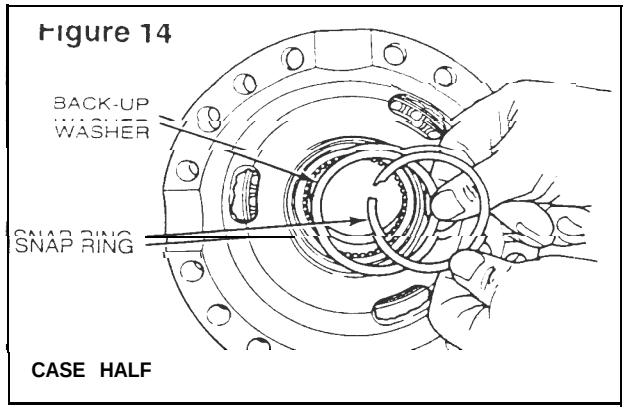

15. Pull the drive tube out from the bearing side of the differential case half. **Figure 15.**

Figure 15

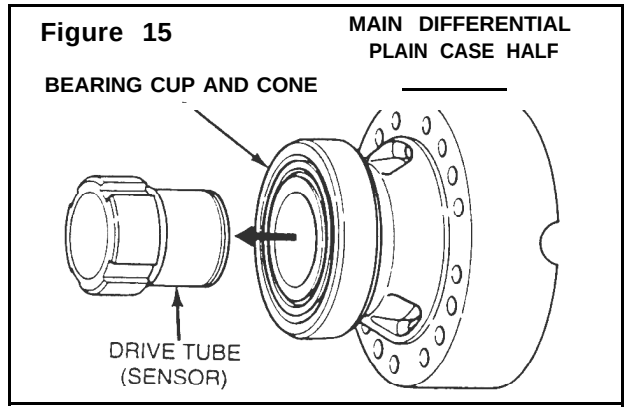

Prepare Parts For Assembling

⚠ *CAUTION*

Do not clean the speed sensor assembly by using cleaning solvents. Damage to components can occur. Clean the speed sensor assembly only with a clean dry rag or paper towel.

1. If you are using Maintenance Manual No. 5, continue with the following:
   - Section 3, Prepare Parts for Assembly, starting on page 15, all necessary steps.
   - Section 4, General Procedures, starting on page 20, all necessary steps.

If you are using Maintenance Manual No. 5L, continue with the following:

- Section *4,* Prepare the Parts for Assembly, starting on page 25, all necessary steps.
- Section 5, General Information, starting on page 31, all necessary steps.

Install the Speed Sensors

If the drive tube was not removed, start with the **Note** before **Figure 18** and step 4 on page 7.

1. Install the drive tube into the differential case half from the bearing side. **Figure 16.**

Figure 16

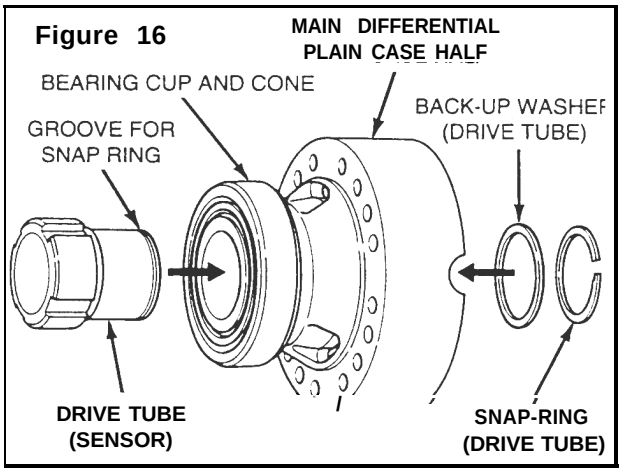

2. While holdinq the drive tube in position, place the back-up washer over the drive tube and against the inside of the differential case half. Install the snap ring into the groove in the drive tube using a screwdriver if necessary. **Figures 16 and 17.**

Figure 17

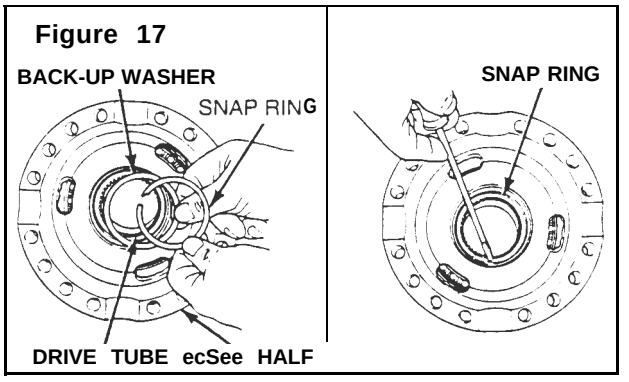

3. If you are using Maintenance Manual No. 5, continue with the following steps in Section 5, Assembly:

- Page 39, steps 9-16 of Assemble the Main Differential and Ring Gear Assembly.

Continue with all steps of the following procedures in Section 5, Assembly:

- Page 41, Rotating Resistance Check of Differential Gears.
- Page 42, Install the Differential and Ring Gear Assembly.
- Paqe 43, Adjust Preload of Differential Bearings.
- Page 45, Check Runout of Ring Gear.
- Page 45, Adjust Backlash of the Ring Gear.
- Page 47, Check Tooth Contact Patterns of the Gear Set.
- Page 50, Install and Adjust the Thrust SCREW.

If you are using Maintenance Manual No. 5L, continue with the following steps in Section 6, Assembly:

- Page 45, steps 5-13 of Assembling the Main Differential Case and the Ring Gear.

Continue with all steps of the following procedures in Section 6, Assembly:

- Page 46, Checking the Rotating Resistance of the Side Gears in the Main Differential Case.
- Page 47, Installing the Main Differential Case and Ring Gear Assembly into the Carrier.
- Page 49, Adjusting the Preload on the Differential Bearings.
- Page 51, Checking the Runout of the Ring Gear.
- Page 52, Adjusting the Backlash of the Ring Gear.
- Page 53, Checking the Tooth Contact Patterns of the Gear Set.

NOTE:

Before you start installing the speed sensor assembly and components into the bearing adjusting ring, check the position of the roll pin that locks the adjusting ring in place. Correct installation of the speed sensor cannot be done if the roll pin extends beyond the snap ring groove in the lugs of the adjusting ring. Adjust the position of the roll pin, if necessary, by using a drift and hammer. **Figure 18.**

Figure 18

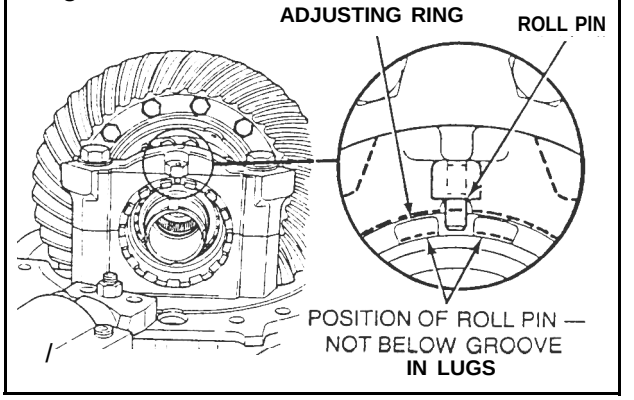

4. Check the outside of the speed sensor connector, there must be an O-ring positioned in the first groove. Install an O-ring if necessary. **Figure 19.**

Figure 19

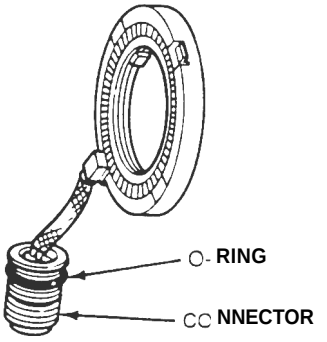

~ *CAUTION*

If an old sensor assembly is being installed, a visual inspection of the cables should be performed. /f there is evidence of broken wire insulation the sensor assembly may not function correctly. The old sensor assembly should be replaced.

5. Using your thumbs, push the connector of the speed sensor through the large hole in the carrier flange. Push from the inside surface of the flange toward the outside surface.

6. Using you thumb, apply and hold pressure against the back of the connector. While you hold the pressure, install the snap ring into the first full groove that appears past the outside surface of the carrier flange. Needle nose pliers are shown to install the snap ring. **Figure 20.** Lay the sensor on the inside face of the carrier flange and continue with step 7.

Figure 20

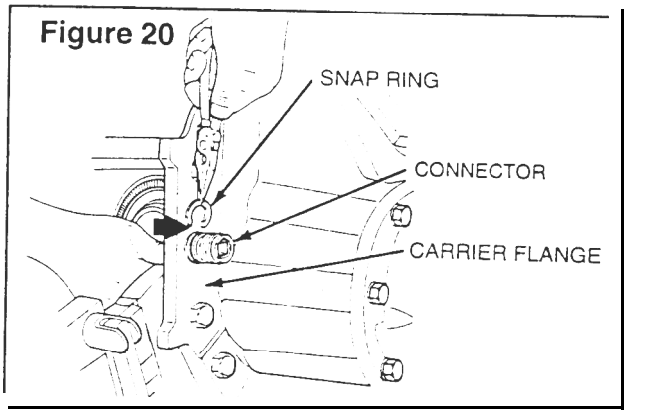

7. Install the wave washer inside the bore of the bearing adjusting ring. **Figure 21.**

Figure 21

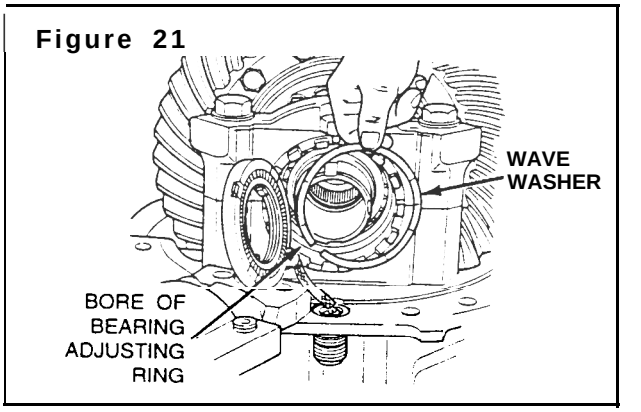

8. Apply the same lubricant that is used in the axle to the outer surface of the drive tube and on the drive seal of the speed sensor. **Figure 22.**

Figure 22

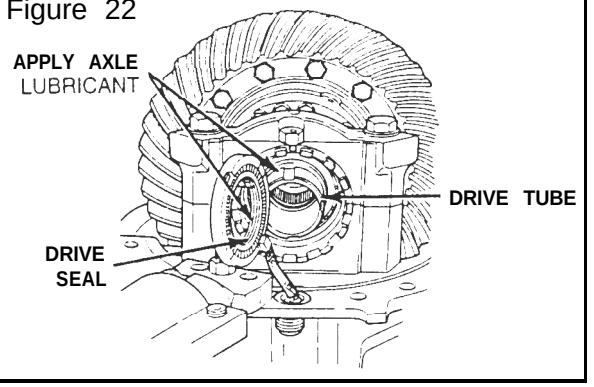

NOTE:

Correct position of the speed sensors installed in the bearing adjusting rings are shown in Figures 23 and 24. The wire outlet area of the coil of each sensor must face out and be aliqned with the correct slot in the adjusting ring.

Figure 23

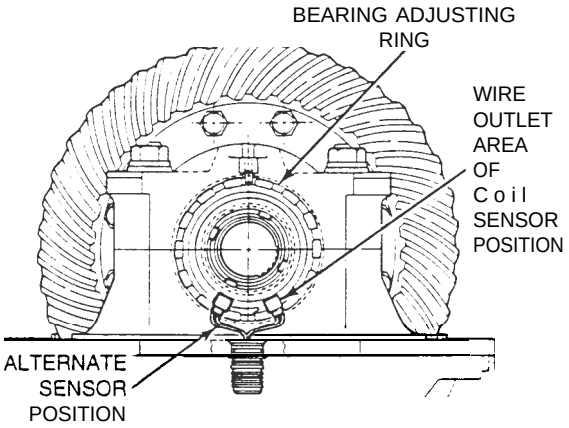

POSITION OF SPEED SENSOR IN PLAIN CASE HALF SIDE

Figure *24*

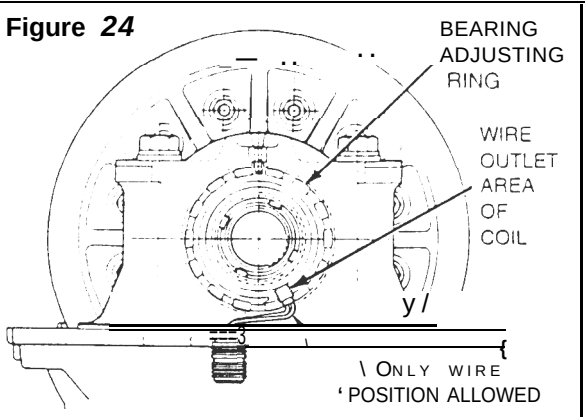

POSITION OF SPEED SENSOR IN FLANGE CASE HALF SIDE

9. Place the speed sensor assembly over the bearing adjusting ring with the wires in the position shown in **Figure 23 or 24.** Turn the rotor in the sensor until the tabs align with the slots in the drive tube. **Figure 25.**

Position the sensor so the wire outlet area of the coil is centered in the slot. It must not hit the adjusting ring lug as the sensor assembly is pushed into the bore. The wire outlet area of the coil will not center itself and can be damaged during the installation.

Figure 25

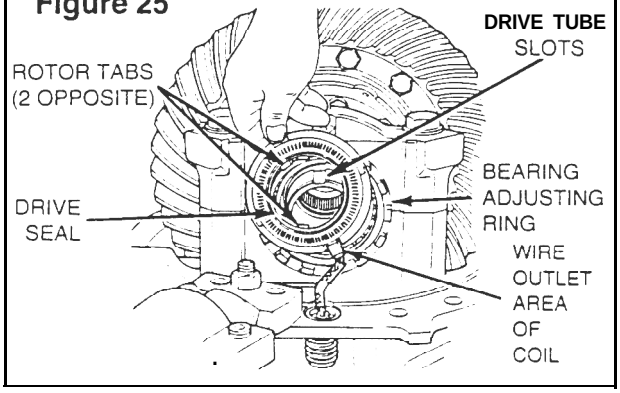

⚠ CAUTION

The speed sensor must be installed carefully and evenly into the bore of the bearing adjusting ring or damage to the sensor can occur.

10. Press the speed sensor evenly into the bore of the bearing adjusting ring by hand while carefully sliding the drive seal over the drive tube. Watch the wire outlet area of the coil to see that it freely enters the slot and is not being distorted. Use even pressure around the sensor, nearthe outer diameter until the sensor is against the wave washer.

    If the drive seal slips off the rotor of the sensor, remove the speed sensor from the adjusting ring. Place the drive seal in position on the rotor and repeat steps 9 and 10. **Figure 2.**

11. Press the speed sensor down into the bearing adjusting ring so that the top of the sensor is past the snap ring grooves in the lugs. Hold the sensor in this position for snap ring installation.

12. Place the snap ring over the speed sensor with the opening-aligned with the wire outlet area of the coil. Start by placing one end of the snap ring in the groove close to the wire outlet area of the coil. While you apply and hold even pressure around the sensor, install the snap ring into the grooves in the lugs of the adjusting ring. Use snap ring pliers or a screwdriver, if necessarv, to help install the snap ring. **Figure 26. -**

Figure 26

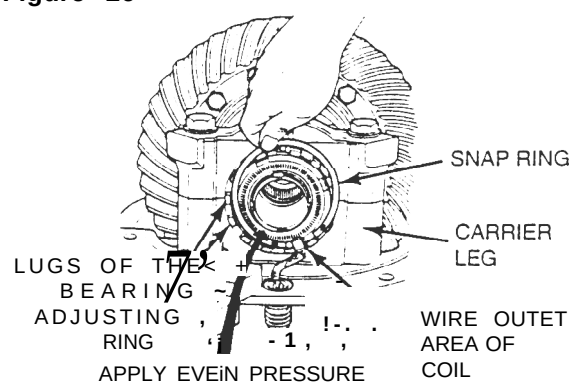

13. The sensor should position itself firmly and evenly against the snap ring. If it does not, apply hand pressure to the sensor, depressing it against the wave washer until sensor realignment occurs.

14. After the sensor is installed, make sure the outlet wires of the sensor are as close to the carrier leg as possible to be sure they will not get pinched when the carrier is installed in the axle housing.

15. If you are using Maintenance Manual *No. 5,* continue with the following steps:

    - Section 5, Assembly, page 51, all steps of Install Differential Carrier into Axle Housing.
    - Fill the axle with the specified type and amount of lubricant. See Section 7, Lubrication, page 62.

    Ž For additional information about lubrication, see Rockwell Maintenance Manual No. 1, Lubrication.

    If you are using Maintenance Manual No. 5L, continue with the following steps:

    - Section 6, Assembly, page 71, all steps of Install the Differential Carrier in the Axle Housing.

16. Perform “Sensor Continuity and Short Tests” as outlined in steps A. and B. on pages 2 and 3.

⚠ WARNING

The Rockwell Speed Sensor is part of an electrical system. When you work on the speed sensor, take the same precautions as you must take with any electrical system to avoid serious personal injury. As with any electrical system, there is a danger of electrical shock or sparks which can ignite flammable substances.

17. Connect the ground cable to the battery.

NOTE:

You must perform a complete ABS check-out per the manufacturer's recommendations prior to returning the vehicle to service.

NOTES

RocKWeLL Automotive

North American Truck Systems
Rockwell International Corporation
2135 West Maple Road
Troy, Ml 48084 U.S.A.
800-535-5560

information contained in this publication was in effect at the time the publication was approved for printing and is subject to change without notice or liability. Rockwell International reserves the right to revise the information presented or discontinue the production of parts described at any time.

0 Copyright 1995
Rcckwelf International
Al Rights Reserved

Printed in the U.S.A.
Please Recycle

TP-9597
Issued 5/95
16579/24240

TP-9597
issued 5-95

Rockwell

TECHNICAL BULLETIN

Removing and Installing The Rockwell In-Axle Speed Sensors (For Anti-Lock Brake Systems, ABS)

When a vehicle is equipped with an anti-lock brake system that has Rockwell in-axle mounted speed sensors, there are two sensor assemblies in the differential carrier. The speed sensors mount into each adjusting ring of the differential bearings. **Figure 1.**

Service both speed sensors by using the following instructions and the procedures from Rockwell Maintenance Manuals No. 5 or 5L that are indicated in the steps.

Use Maintenance Manual No. 5 if the speed sensors are mounted in a single drive axle or the rear axle of a tandem. Use Maintenance Manual No. 5L if the speed sensors are mounted in the forward axle of a tandem.

Figure 1

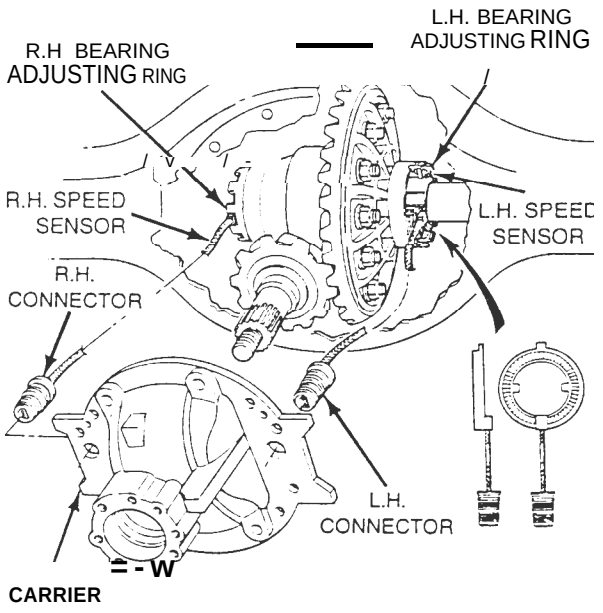

NOTE:

Illustrations used in this publication are of an RS-145 Series single drive axle. The parts and location of tfie connectors of 160 and 180 Series single and tandem axles may vary from those shown.

One speed sensor assembly and all related parts are shown in **Figure 2.** Use Figures 1 and 2 as a reference when using these instructions.

Figure 2

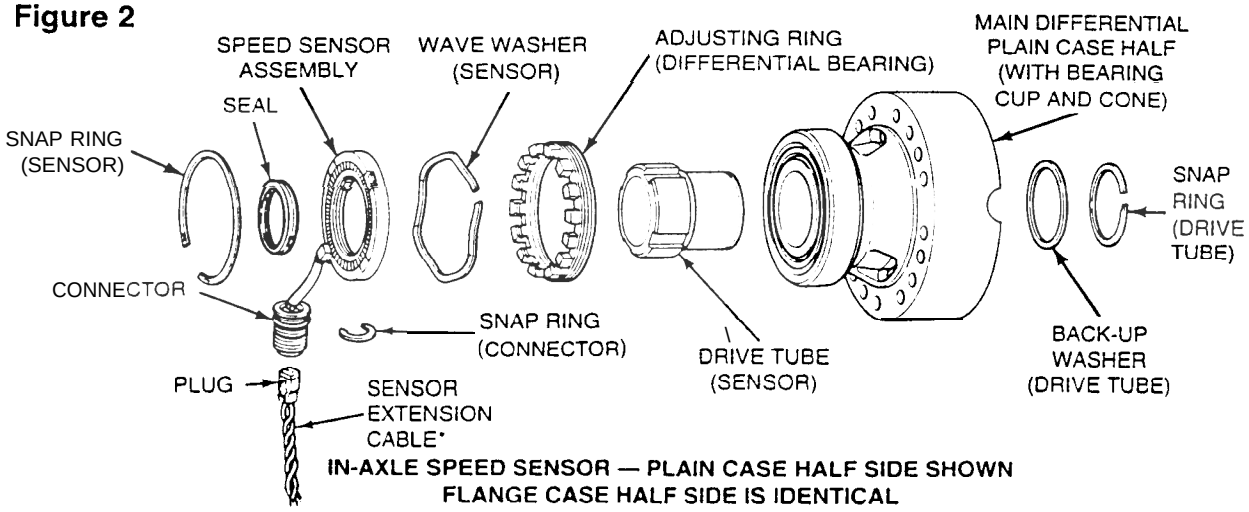

" NOTE: Sensor Extension Cable — it is recommended that the two wires be twisted together at greater than 20 turns per meter.

section 1 Introduction

Standard Single Reduction Carriers Without Diff. Lock

Rockwell single reduction standard carriers, Figure 1, are used in most Rockwell single axles, rear of tandem axles and front drive steering axles.

The sinqle reduction carrier models are front mounted into the-axle housing. These carriers have a hypoid drive pinion and ring gear set and bevel gears in the differential assembly.

A straight roller bearing (spigot) is mounted on the head of the drive pinion. All other bearings in the carrier are tapered roller bearings.

When the carrier operates, there is normal differential action between the" wheels all the time.

Figure 1

Standard Carrier

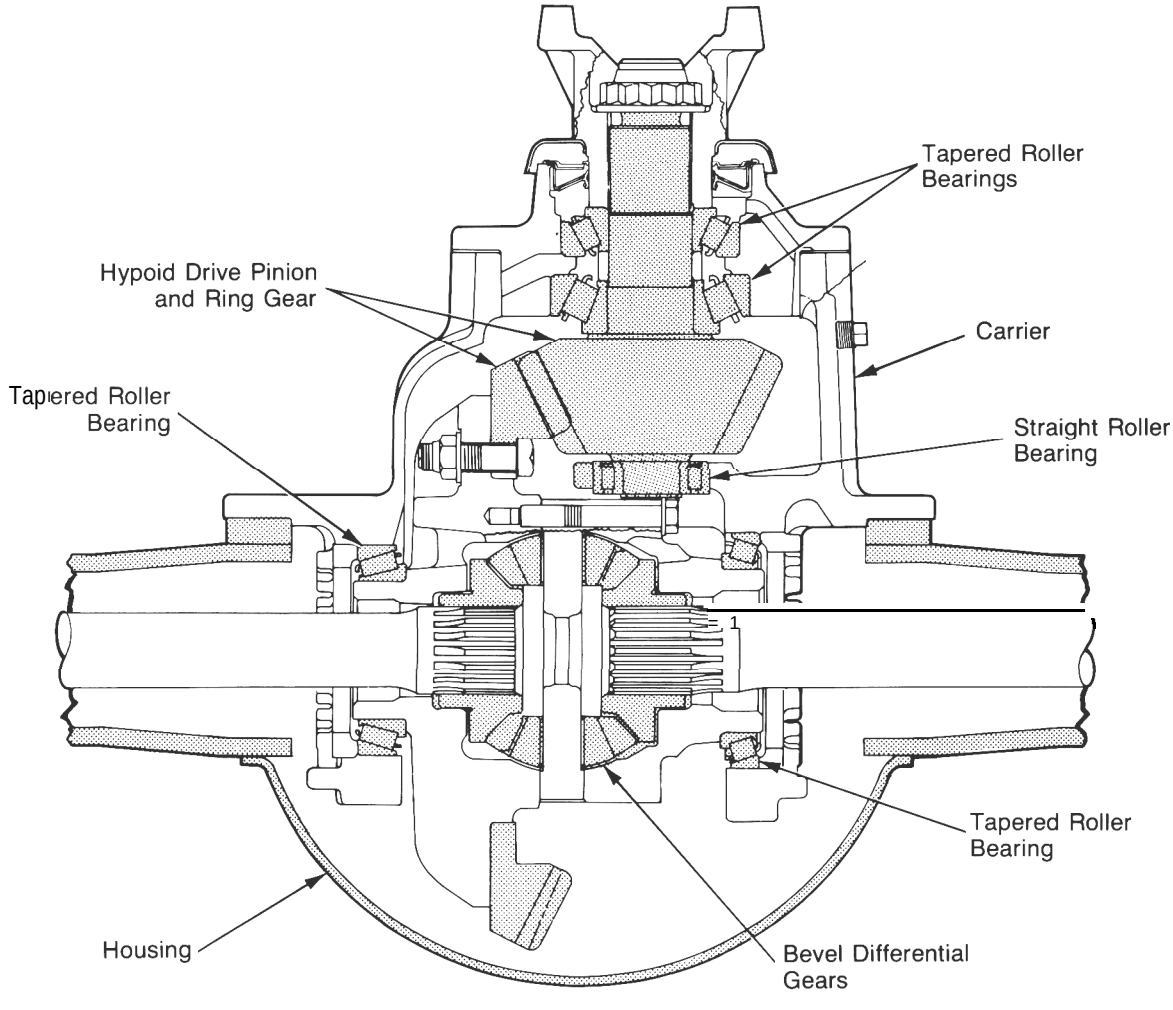

Single Reduction Carriers with Driver Controlled Main Differential Lock (Diff. Lock)

Rockwell single reduction carriers with Differential Lock, Figure 2, have the same type of gears and bearings as the standard type carriers.

The differential lock is operated by an air actuated shift assembly that is mounted on the carrier. When the differential lock is activated, the shift collar is moved along the splines of the axle shaft toward the differential case. When the splines on the collar are engaged with splines on the differential case the axle shafts and differential assembly are locked together. When the carrier operates in the locked position, there is no differential action between the wheels. When the carrier is operated in the unlocked position, there is normal differential action between the wheels all the time.

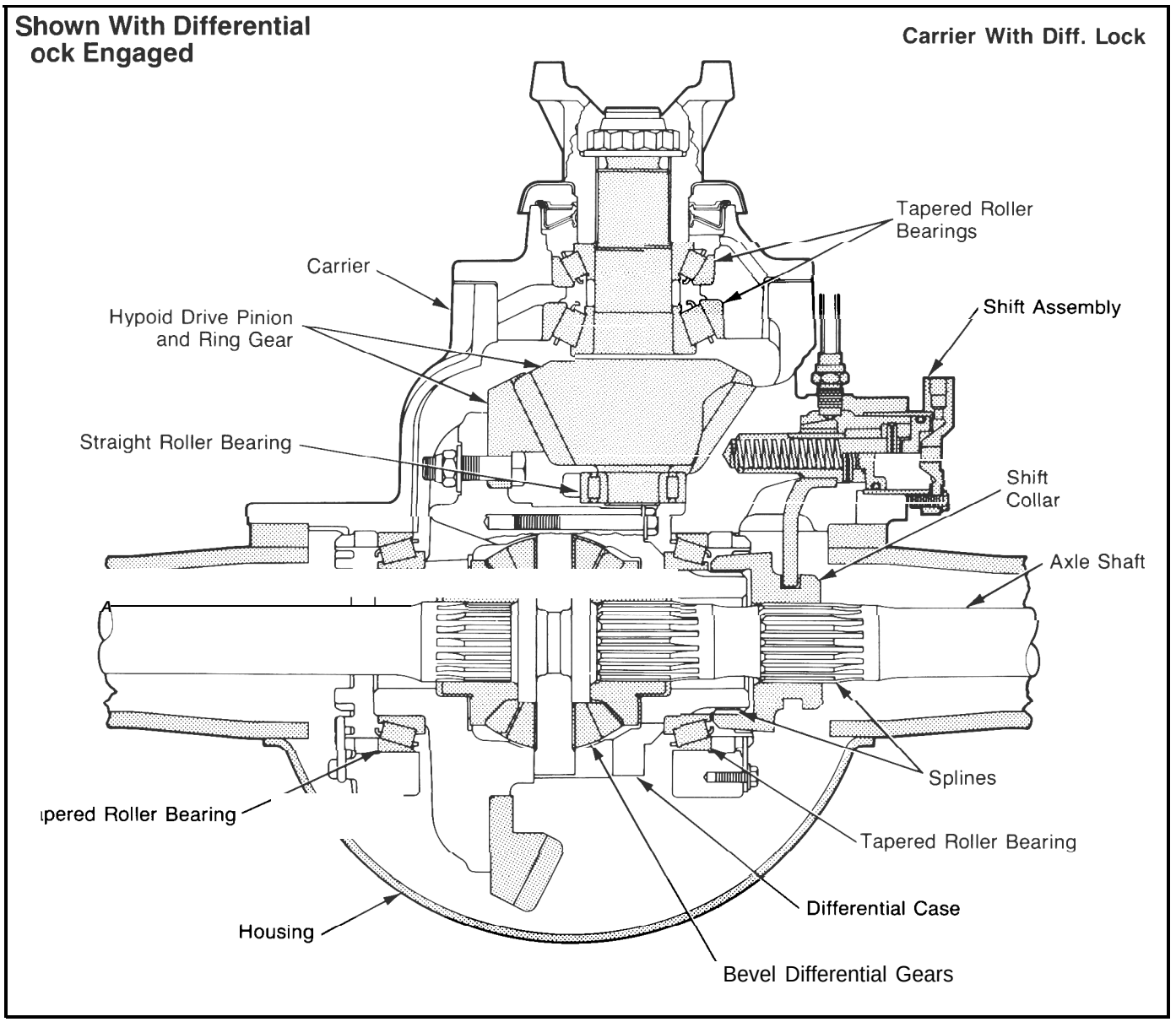

section 2 Disassembly

Remove Differential Carrier From Axle Housing

IMPORTANT. If the vehicle is equipped with a driver controlled main differential lock, see complete instructions beginning on page 53. To tow a vehicle see instructions on pages 25 and 26.

1. Raise the end of vehicle where the axle is mounted. Use a jack or other lifting tool. **Figure 3.**

⚠ *WARNING:*

***Do not work under* the vehicle if supported by jacks or lifting tools only. *Jacks and lifting* tools can slip and cause injury.**

Figure 3

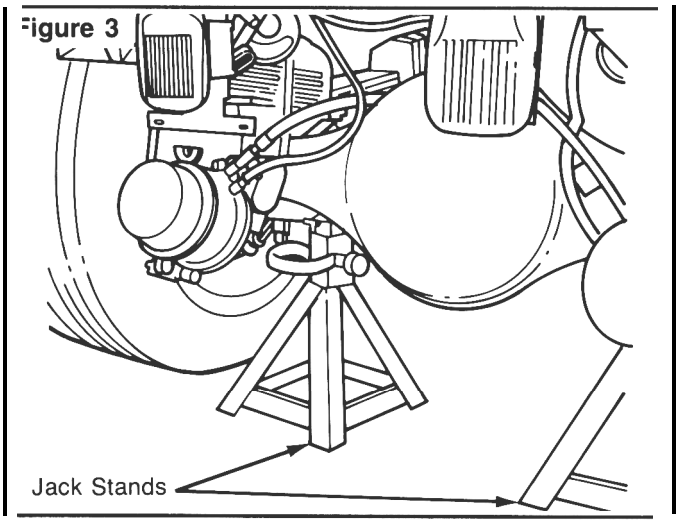

2. Put jack stands under each spring seat of the axle to hold vehicle in the raised position. **Figure 3.**

3. Remove the plug from bottom of axle housing and drain lubricant from the assembly.

4. Disconnect the driveline universal joint from the pinion input yoke or flange on the carrier. **Figure 4.**

5. Remove the capscrews* and washers or stud nuts* and washers from the flanges of both axle shafts.

6. Loosen the tapered dowels* in the flanges of both axle shafts as" follows.

"Some Rockwell carriers do not have the parts described.

Figure 4

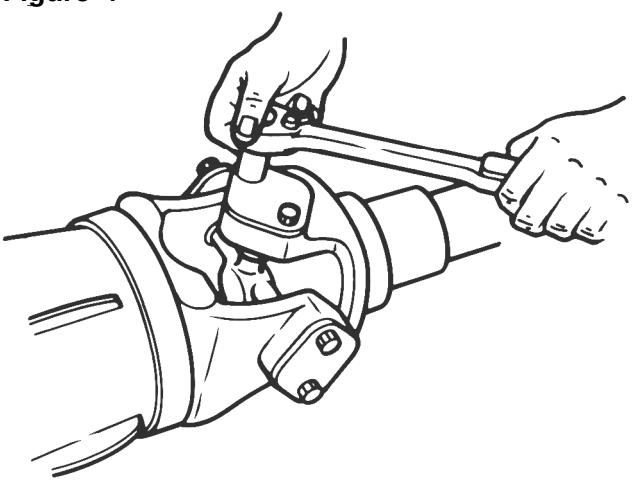

⚠ *WARNING:*

Wear safe eye protection. Do not hit the round driving lugs on the head of axle shafts. Lugs can break and cause injury.

A. Hold a 1-1/2 inch diameter brass drift against the center of the axle shaft, inside the round driving lugs. **Figure 5.**

Figure 5

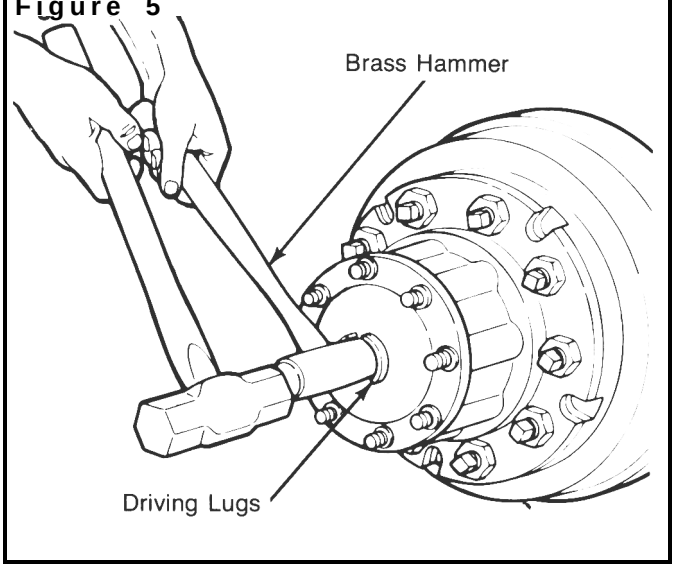

NOTE:

A 1-1/2 inch diameter brass hammer *can be used as a drift.*

B Hit the end of the drift with a large hammer (five to six pounds) and the axle shaft and tapered dowels will loosen.

CAUTION:

Do not use a chisel or wedge to loosen the axle shafts and dowels. The chisel or wedge can damage the hub, axle shafts and, if used, oil seals.

7. Remove the tapered dowels and both axle shafts from the axle assembly.

8. Place a hydraulic roller jack under the differential carrier to support the assembly. **Figure 6.**

Figure 6

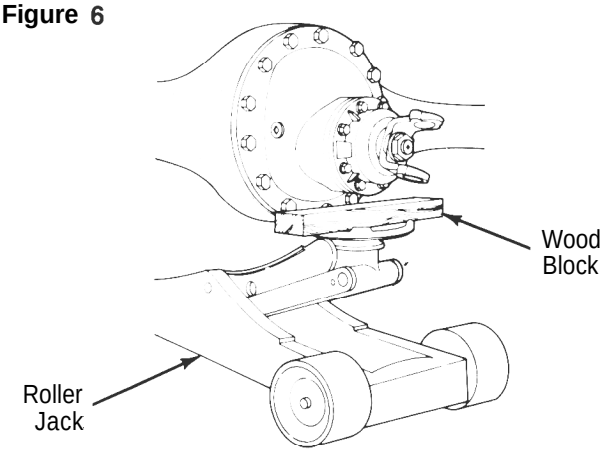

9. Remove all but the top two carrier to housing capscrews or stud nuts and washers.

10. Loosen the top two carrier to housing fasteners and leave attached to the assembly. The fasteners will hold the carrier in the housing.

11. Loosen the differential carrier in the axle housing. Use a leather mallet to hit the mounting flange of carrier at several points.

NOTE:

Some carrier models have threaded puller screw holes in the mounting flange. Puller screws can be used to loosen and pull the carrier from the axle housing. If puller screws are used, clean the threaded holes before the puller screws are installed.

12. After the carrier is loosened, remove the top two fasteners.

13. Carefully remove the carrier from the axle housing using the hydraulic roller jack. Use a pry bar that has a round end to help remove the carrier from the housing.

CAUTION:

When using a pry bar be careful not to damage the carrier or housing flange. Damage to these surfaces will cause oil leaks.

14. Remove and discard the carrier to housing gasket.

15. Lift the differential carrier by the input yoke or flange and put the assembly in a repair stand. **Figure 7.** Use a lifting tool for this procedure. Do not lift by hand. A carrier stand can be made by using the drawing on page 6.

Figure 7

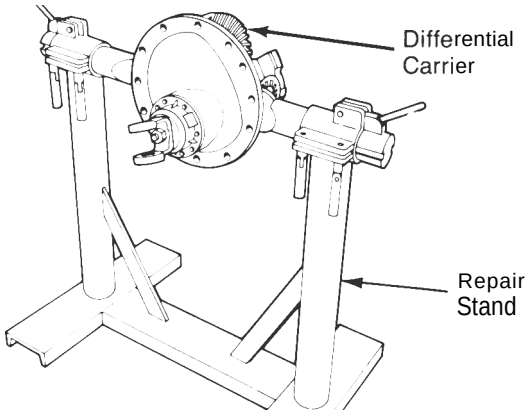

Remove The Differential And Ring Gear From The Carrier

NOTE:

Before you start work on the differential carrier inspect the hypoid gear set for damage. If the inspection shows no damage, the same gear set can be used again. Measure the backlash of the gear set and make a note of the dimension.* Figure 8. *(See procedure on page 46, Steps 1 to 5.) Adjust the backlash to the same dimension after the gear set is installed into the carrier.

A carrier stand, part number J 3409-01 is available from Kent-Moore, Heavy-Duty Division, 29784 Little Mack, Roseville, Michigan 48066-2298.

Carrier Stand

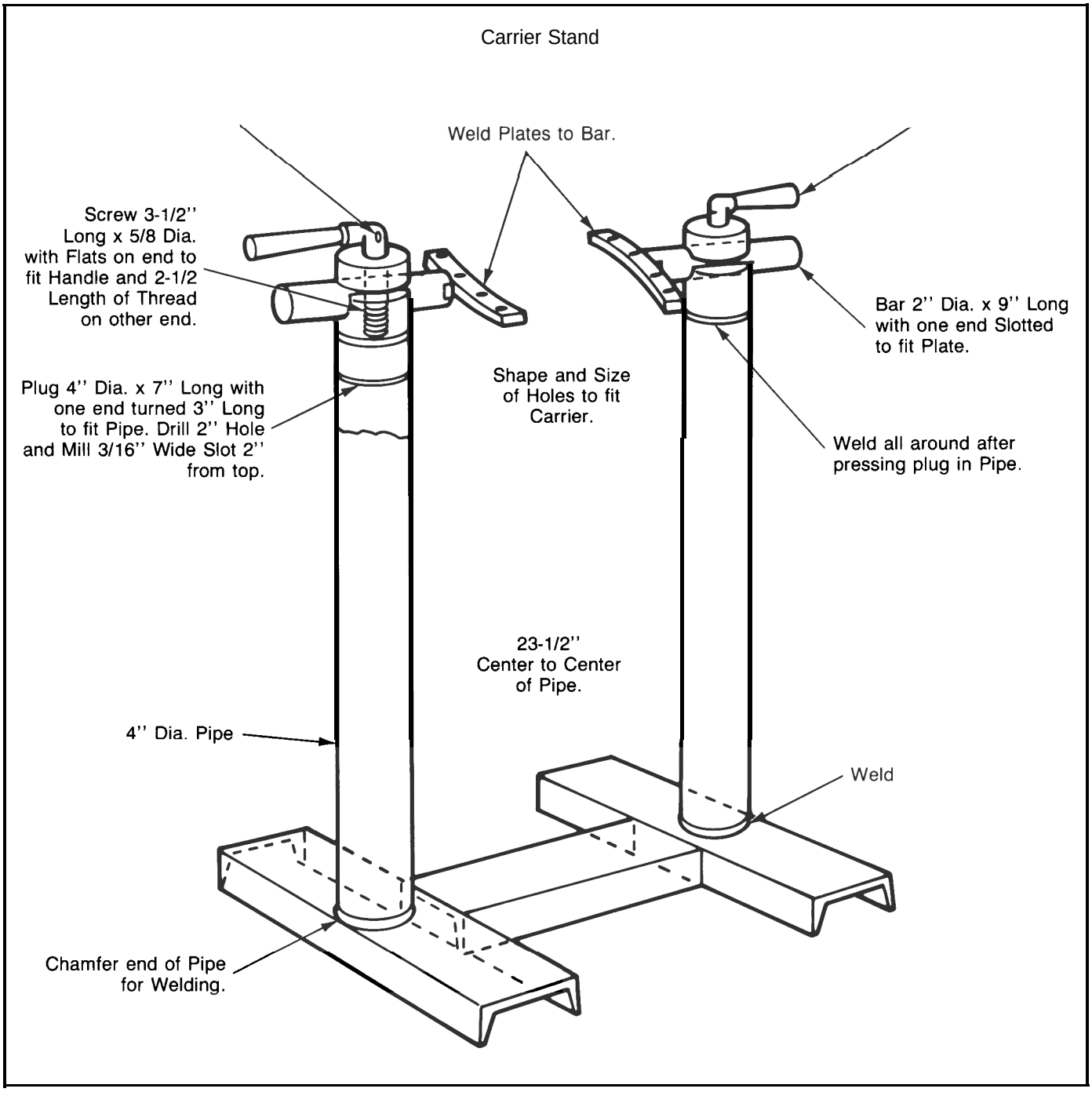

Figure 8

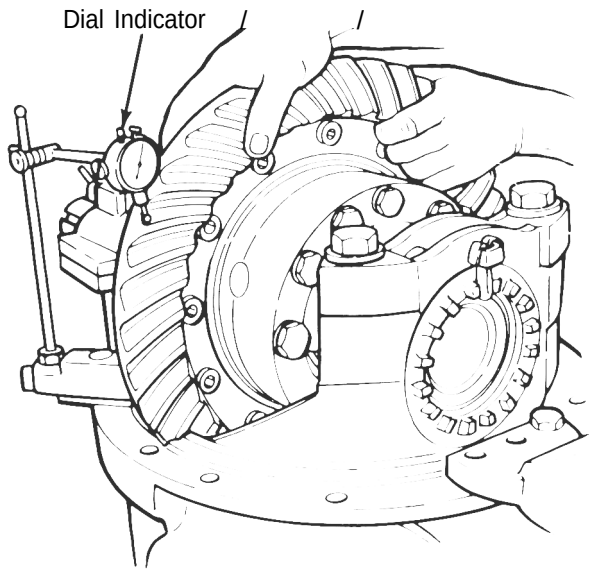

1. Loosen the jam nut* on the thrust screw*.

2. Remove the thrust screw* and jam nut* from the differential carrier. **Figure 9.**

g 9

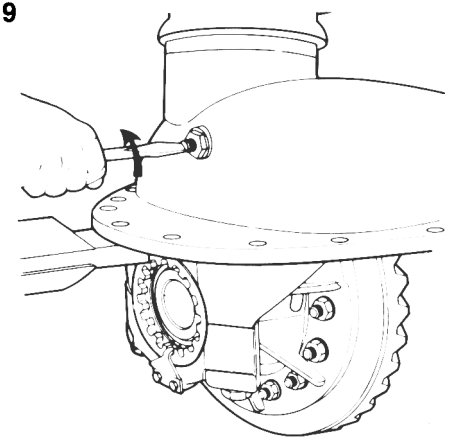

NOTE:

Some Rockwell carrier models have a thrust block: The thrust block will fall away from the ring gear inside the carrier when you remove the thrust screw. **Figure 10.**

Figure 10

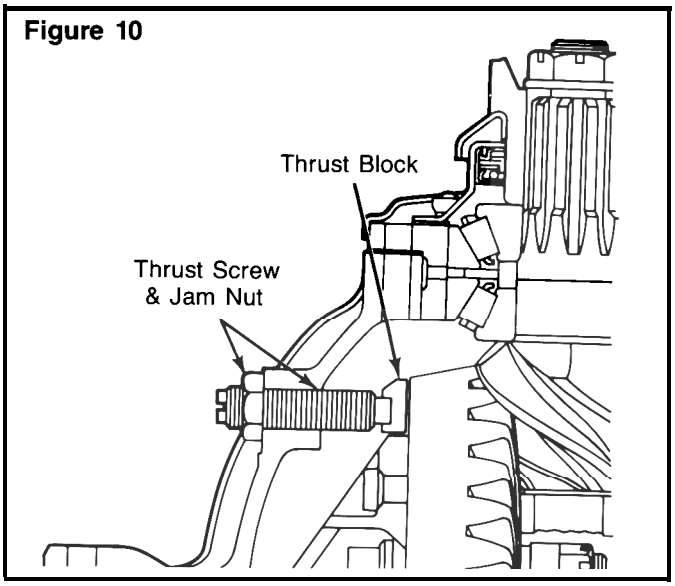

3. Rotate the differential carrier in the repair stand until the ring gear is at the top of the assembly.

4. Mark one carrier leg and bearing cap for the purpose of correctly matching the parts when you assemble the carrier. A center punch and hammer can be used to mark the parts. **Figure 11.**

Figure 11

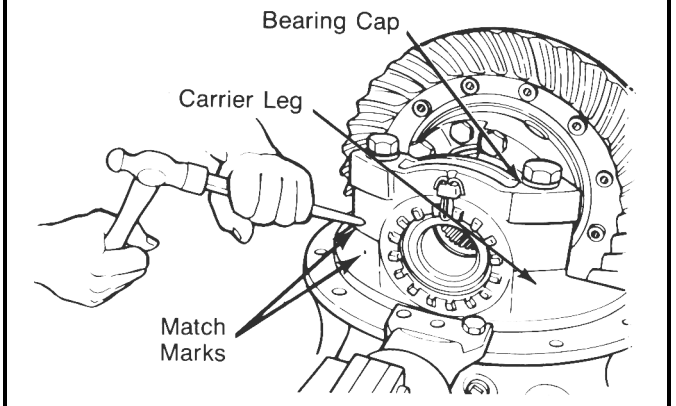

5. Remove the cotter keys*, pins* or lock plates* that hold the two bearing adjusting rings in position. Use a small drift and hammer to remove pins. Each lock plate is held in position by two capscrews. **Figure 12.**

'Some Rockwell carriers do not have the parts described.

Figure 12

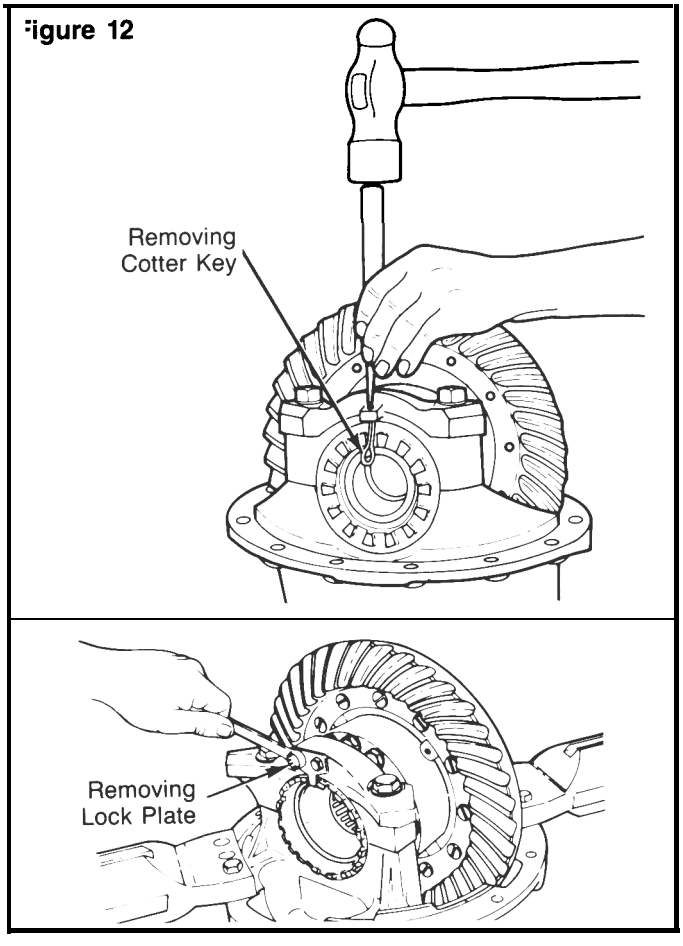

6. Remove the capscrews and washers that hold the two bearing caps on the carrier. Each cap is held in position by two capscrews and washers. **Figure 13.**

Figure 13

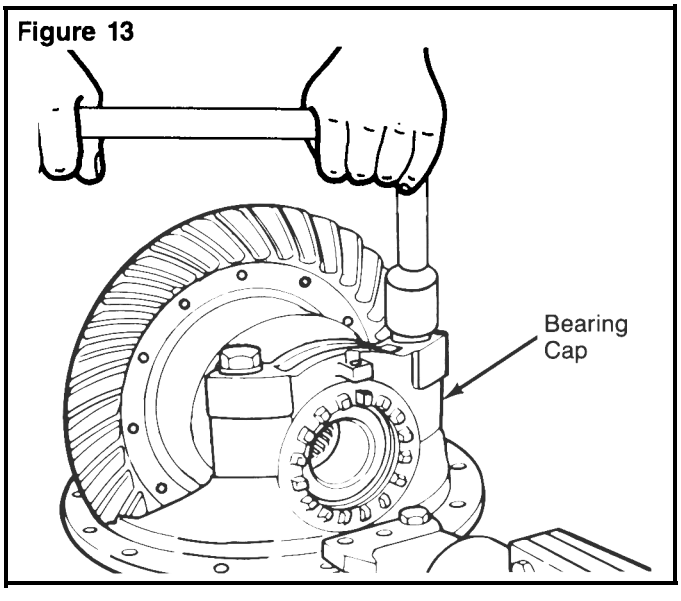

7. Remove the bearing caps and bearing adjusting rings from the carrier. **Figure 14.**

Figure 14

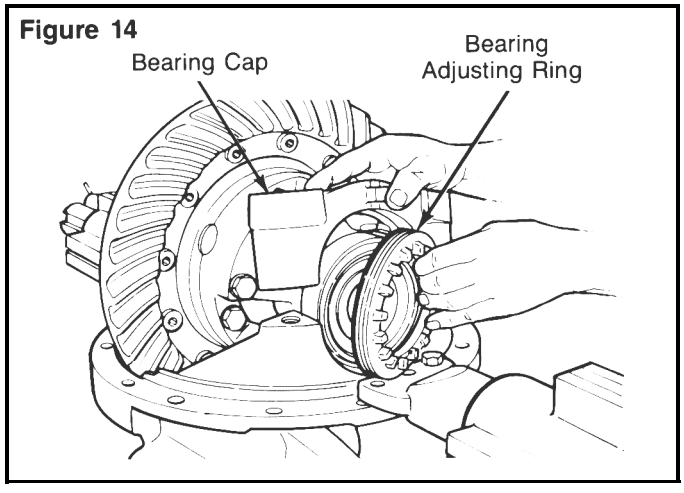

8. Safely lift the main differential and ring gear assembly from the carrier. Put the assembly on a work bench. **Figure 15.**

Figure 15

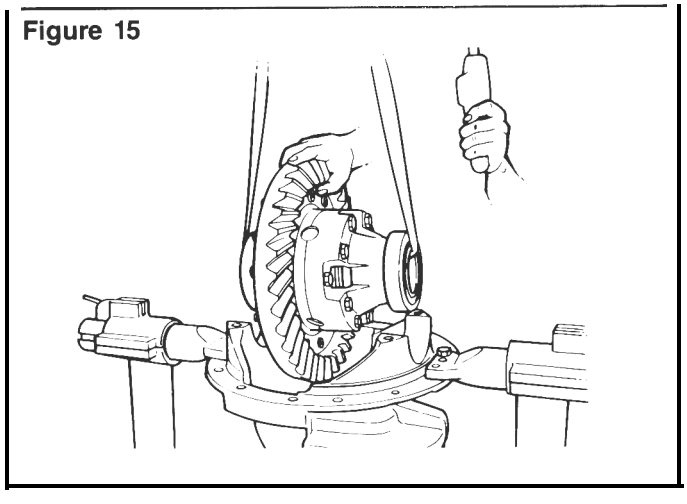

9. Remove the thrust block* from inside the carrier.

Disassemble the Differential and Ring Gear Assembly

1. If the matching marks on the case halves of the differential assembly are not visible, mark each case half with a center punch and hammer. The purpose of the marks is to match the plain half and flange half correctly when you assemble the carrier. **Figure 16.**

"Some Rockwell carriers do not have the parts described.

Figure 16

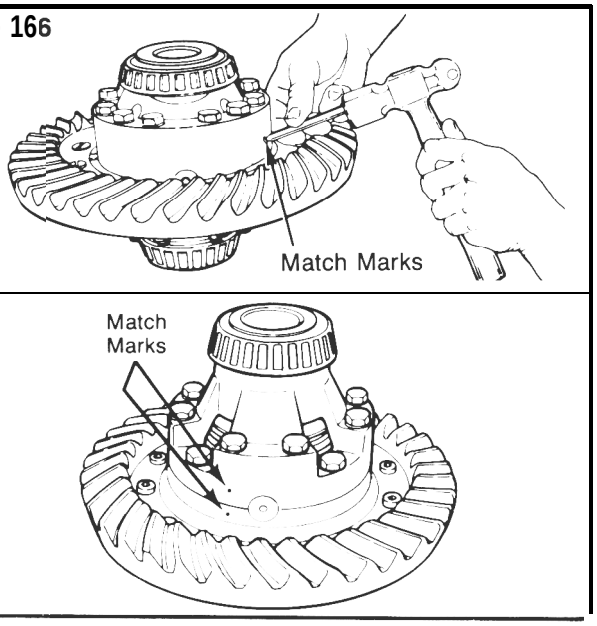

2. Remove the lock wire* capscrews' and washers* or bolts*, nuts* and washers that hold the case halves together.

⚠ WARNING:

Wear safe eye protection. Do not hit steel parts with a steel hammer. Parts can break and cause injury.

3. Separate the case halves. If necessary, use a brass, plastic or leather mallet to loosen the parts.

4. Remove the differential spider (cross), four pinion gears, two side gears and six thrust 'washers from inside the case halves. **Figure 17.**

Figure 17

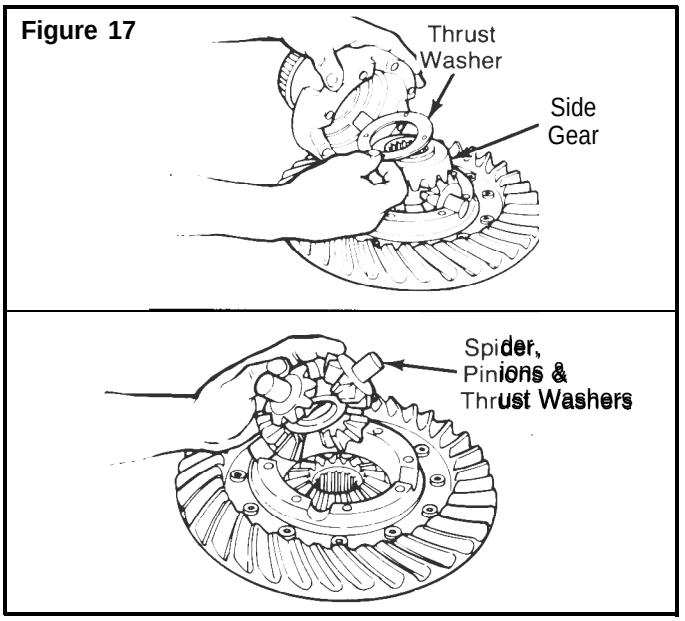

5. If the ring gear needs to be replaced, remove the bolts*, nuts*, and washers* that hold the gear to the flange case half.

6. If rivets* hold the ring gear to the flange case half, remove the rivets as follows:

A. Carefully center punch each rivet head in the center, on the ring gear side of the assembly,

B. Drill each rivet head on the ring gear side of the assembly to a depth equal to the thickness of one rivet head. Use a drill bit that is 1/32 of an inch smaller than the body diameter of the rivets. **Figure 18.**

Figure 18

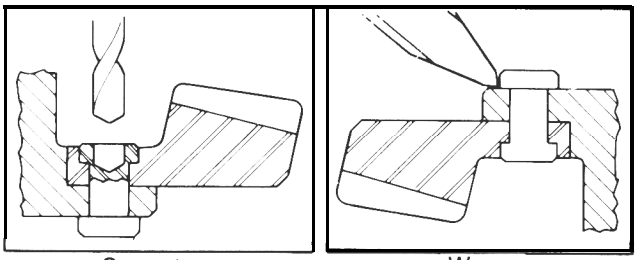

C. Press the rivets through holes in the ring gear and flange case half. Press from the drilled rivet head.

⚠ CAUTION:

Do not remove the rivets or rivet heads with a chisel and hammer. The chisel can damage the flange case half. **Figure 18.**

7. Separate the case half and ring gear using a press. Support the assembly under the ring gear with metal or wood blocks and press the case half through the gear. **Figure 19.**

Figure 19

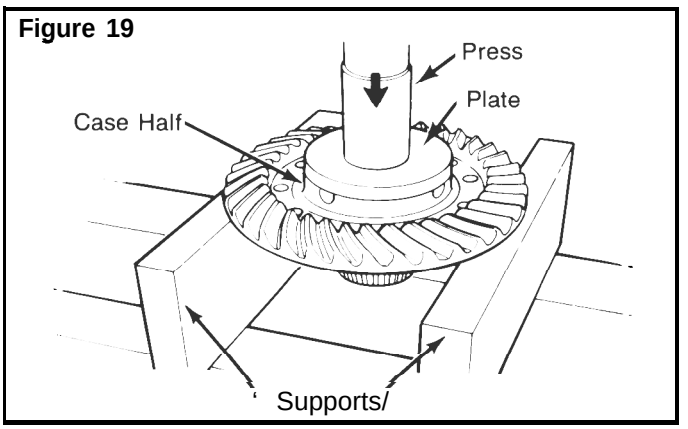

**Some Rockwell carriers do not have the parts described.*

8. If the differential bearings need to be replaced, remove the bearing cones from the case halves. Use a bearing puller or press. **Figure 20.**

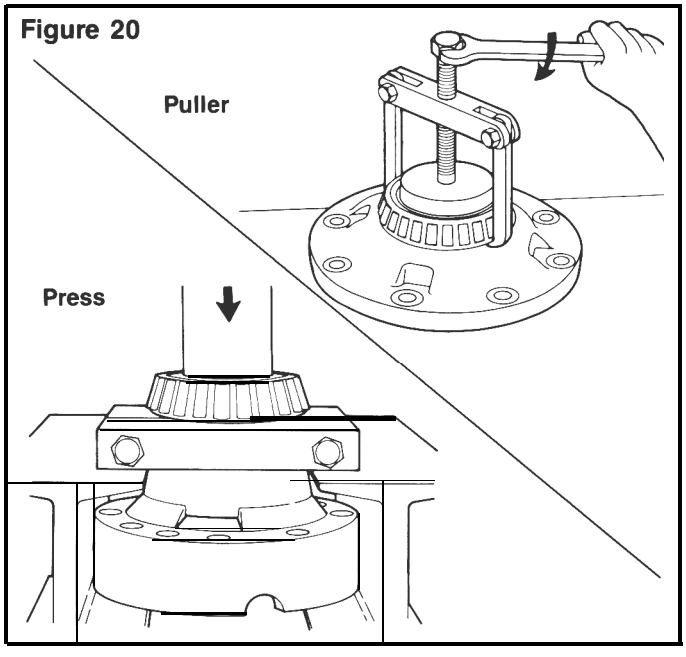

Remove the Drive Pinion and Bearing Cage From Carrier

1. Fasten a yoke or flange bar to the input yoke or flange. The bar will hold the drive pinion in position-when the nut is removed. **Figure 21.**

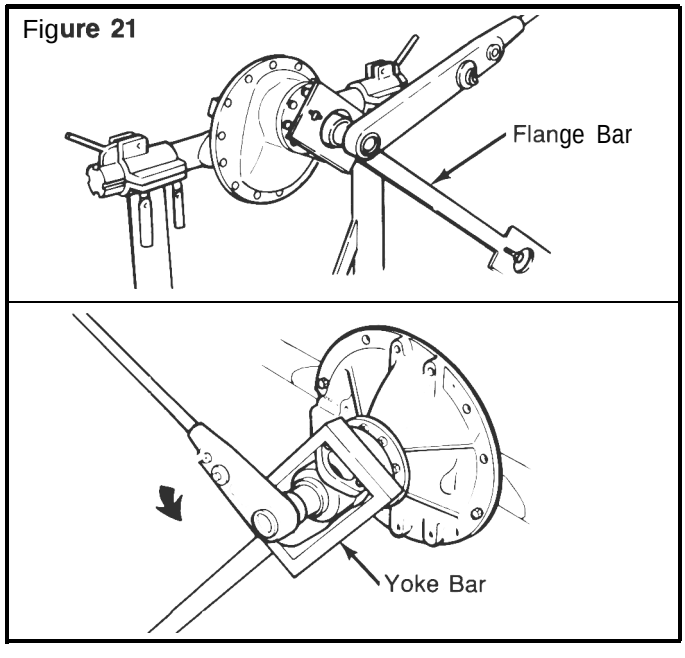

2. Remove the nut and washer* from the drive pinion. **Figure 21.**

3. Remove the yoke or flange bar.

4. Remove the yoke or flange from the drive pinion. If the yoke or flange is tight on the pinion, use a puller for removal. **Figure 22.**

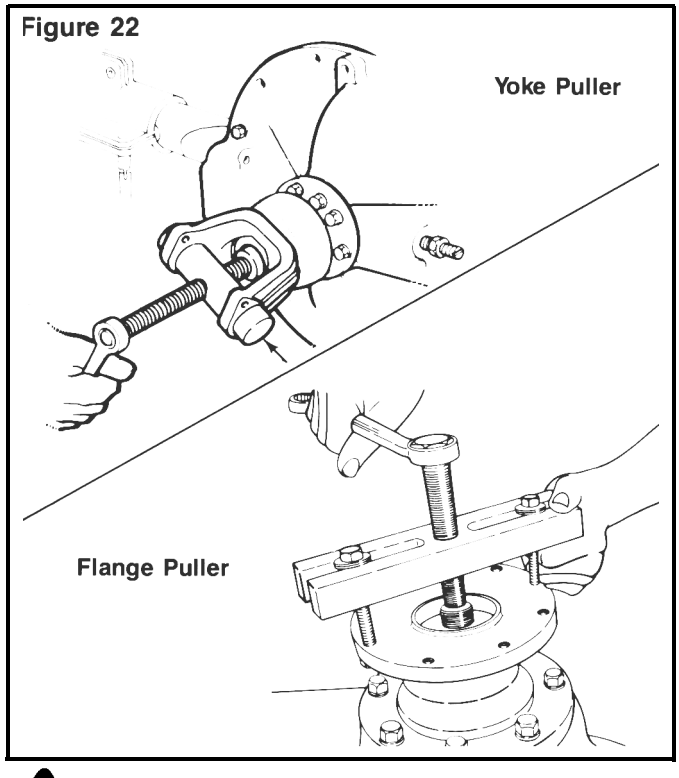

⚠ CAUTION:

Do not use a hammer or mallet to loosen and remove the yoke or flange. A hammer or mallet can damage the parts and cause runout or alignment problems.

5. Remove the capscrews and washers that hold the bearing cage in the carrier. **Figure 23.**

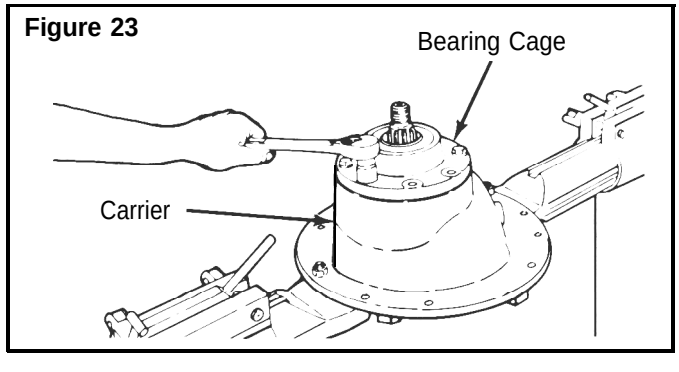

**Some Rockwell carriers do not have the parts described.*

WARNING:

Wear safe eye protection. Do not hit steel parts with a steel hammer Parts can break and cause injury.

6. Remove the cover* and seal assembly and gasket* from the bearing cage. If the cover* is tight on the bearing cage, use a brass drift and hammer for removal. **Figure 24.**

Figure 24

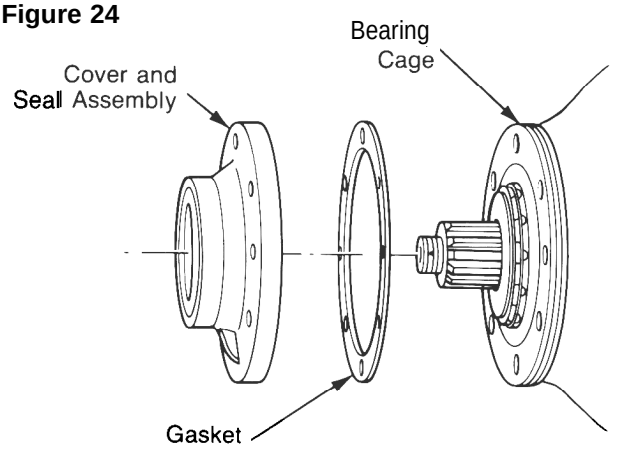

7. If the pinion seal is damaged, remove the seal from the cover*. Use a press and sleeve or seal driver. If a press is not available, use a screwdriver or small pry bar for removal. Discard the pinion seal.

NOTE:

If the carrier does not have a cover and seal assembly the pinion seal will be mounted in the outer bore of the bearing cage. Remove the seal after the drive pinion is removed from the bearing cage.

Figure 25

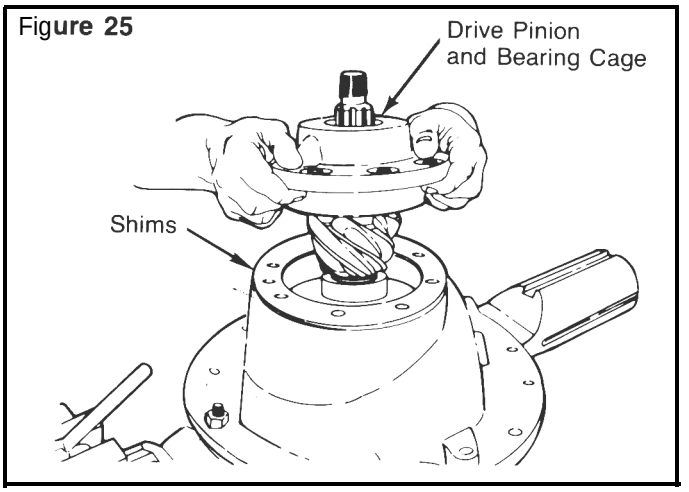

8. Remove the drive pinion, bearing cage and shims from the carrier. If the bearing cage is tight in the carrier, use the following procedures to loosen the cage. **Figure 25.**

WARNING:

Wear safe eye protection. Do not hit steel parts with a steel hammer. Parts can break and cause injury.

A. Hit the bearing cage at several points around the flange area with a leather, plastic or rubber mallet.

B. Some bearing cages have threaded puller screw holes* in the mounting flange. Puller screws can be used to loosen and pull a tightly fitted cage from the carrier. If puller screws are used, clean the threaded holes before the puller screws are installed, **Figure 26.**

Figure 26

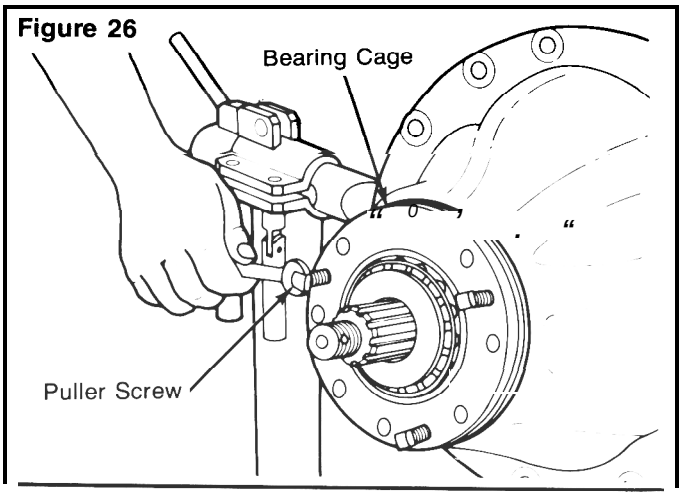

CAUTION:

Do not use a pry bar to remove the bearing cage from the carrier. A pry bar can damage the bearing cage, shims and carrier.

9. if the shims are in good condition, keep the shims together for use later when the carrier is assembled.

10. If shims are to be discarded because of damage, first measure the total thickness of the pack. Make a note of the dimension. The dimension will be needed to calculate the depth of the drive pinion in the carrier when the gear set is installed.

'Some Rockwell carriers do not have the parts described.

Disassemble The Drive Pinion And Bearing Cage

'igure 27 – (Pinion & Bearing Cage Assembly)

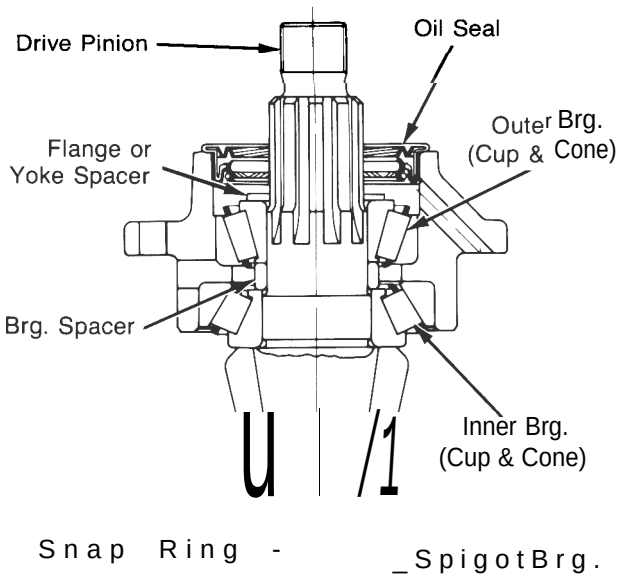

1. Put the drive pinion and bearing cage in a press. The pinion shaft must be toward the top of the assembly. **Figure 28.**

Figure 28

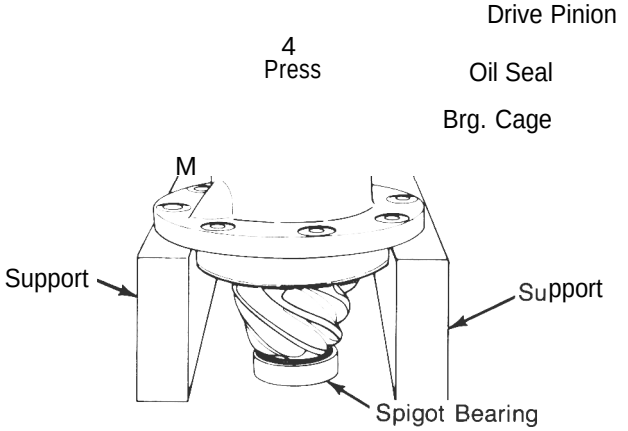

2. Support the bearing cage under the flange area with metal or wood blocks. **Figure 28.**

3. Press the drive pinion through the bearing cage. **Figure 28.**

NOTE:

The inner bearing cone and bearing spacer or spacers will remain on the pinion shaft.

⚠ *WARNING:*

Wear safe eye protection. Do not hit steel parts with a steel hammer. Parts can break and cause injury.

4. If a press is not available, use a leather, plastic or rubber mallet to drive the pinion through the bearing cage.

5. If the pinion oil seal is mounted directly in the outer kre of the bearing cage, remove the seal at this time. Be careful that you do not damage the mounting surfaces of the bearing cage. **Figure 29.**

If the seal is a one piece design (without mounting flange), discard the seal.

If the oil seal is a triple-lip design (with flange), inspect the seal for damage. If the surfaces of the seal and the yoke or flange are smooth and not worn or damaged, you can use the seal again when you assemble the carrier.

Figure 29

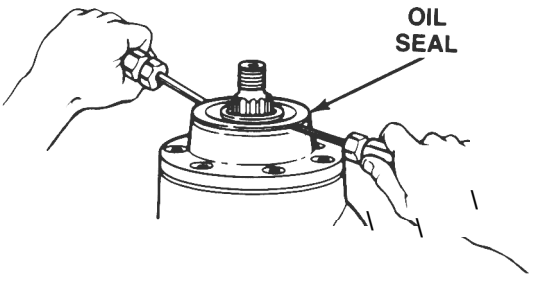

⚠ *CAUTION:*

Be careful when using a screwdriver or pry bar to remove the seal. Do not damage the wall of bore. Damage to the* bore can *cause oil leaks.

6. If the pinion bearings need to be replaced, remove the inner and outer bearing CUP the inside of cage. Use a press and sleeve, bearing puller or a small drift and hammer. The type of tool used depends on the design of the bearing cage. **Figure 30.**

   When a press is used, support the bearing cage under the flange area with metal or wood blocks.

Figure 30

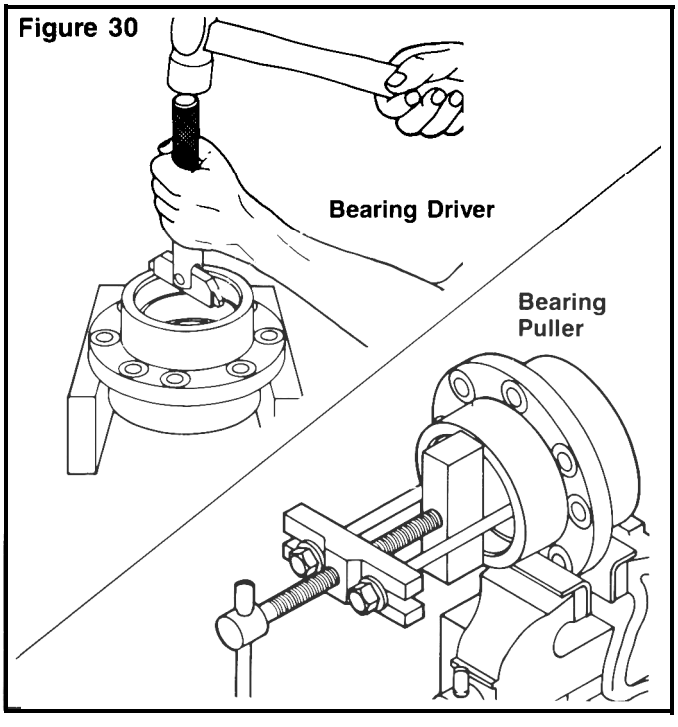

7. If the pinion bearings need to be replaced, remove the inner bearing cone from the drive pinion with a press or bearing puller. The puller MUST fit under the inner race of the cone to remove the cone correctly without damage. **Figure 31.**

Figure 31

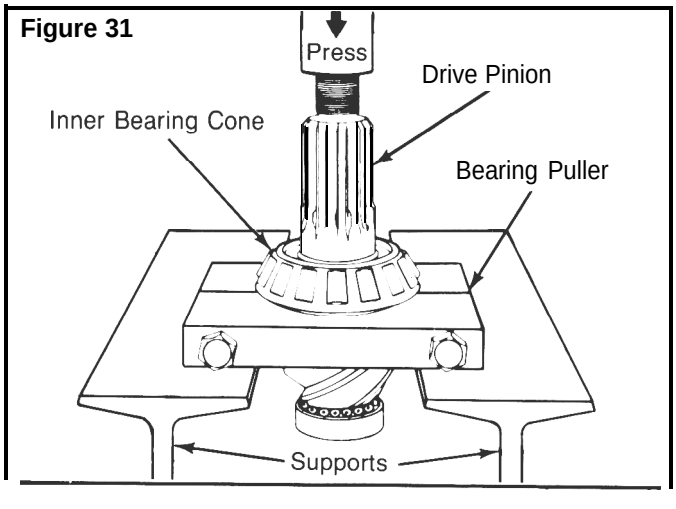

8. If the spigot bearing needs to be replaced, put the drive pinion in a vise. Install a soft metal cover over each vise jaw to protect the drive pinion.

9. Remove the snap ring* from the end of drive pinion with snap ring pliers that expand. **Figure 32.**

Figure 32

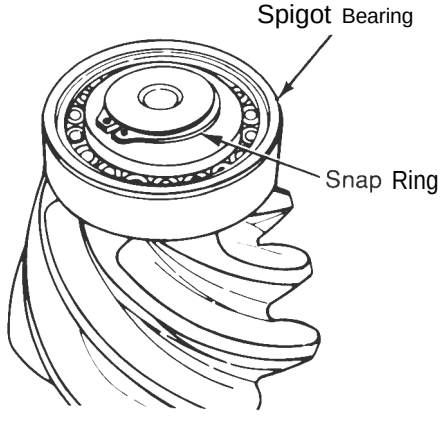

NOTE:

Some spigot bearings are fastened to the drive pinion with a special peening tool. **Figure 33.**

Figure 33

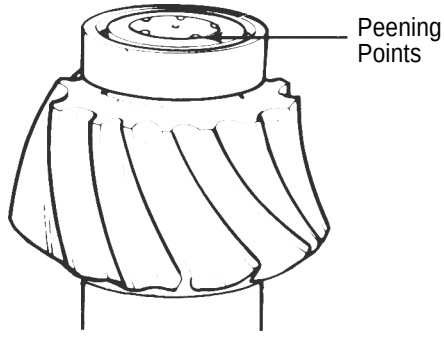

**Some Rockwell carriers do not have the parts described.*

10. Remove the spigot bearing from the drive pinion with a bearing puller. **Figure 34.**

Figure 34

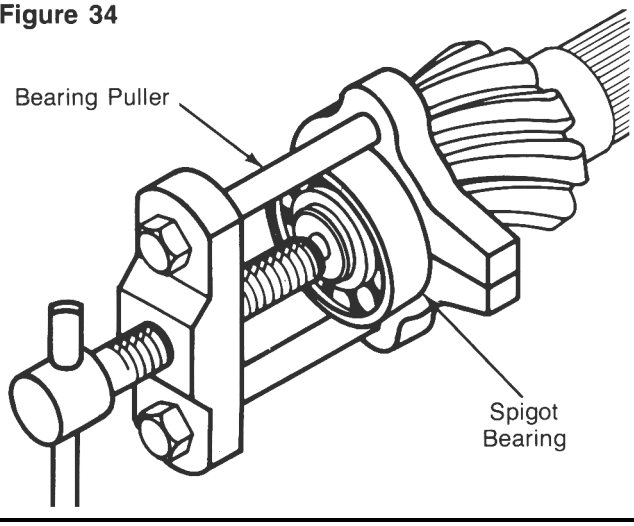

NOTE:

Some spigot bearings are a two-piece assembly. Remove the inner race from the pinion with a bearing puller. Remove the outer racelroller assembly from carrier with a drift or a press. **Figure 35.**

Figure 35

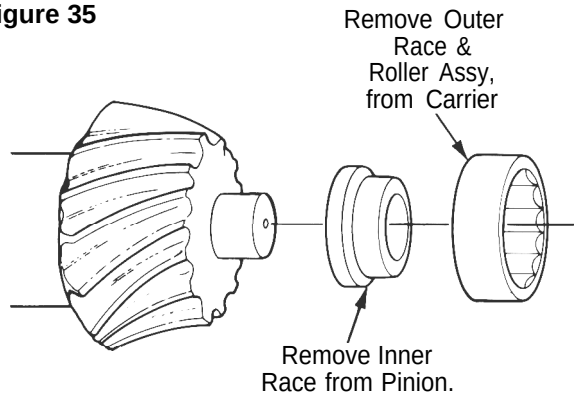

Prepare Parts for Assembly

section 3

Clean Ground and Polished Parts:

1. Use a cleaning solvent to clean ground or polished parts or surfaces. Kerosene or diesel fuel oil can be used for this purpose. DO NOT USE GASOLINE.

WARNING:

Be careful when using cleaning solvents. Follow the solvent manufacturer's instructions for safe use to prevent injury.

2. Use a tool with a flat blade if required to remove gasket material from parts. Be careful not to damage the ground surfaces.

3. DO NOT clean ground or polished parts in a hot solution tank, water, steam or alkaline solutions.

Clean Rough Parts:

1. Clean rough parts the same as cleaning ground and polished parts.

2. Rough parts can be cleaned in hot solution tanks with a weak alkaline solution.

3. Parts must remain in hot solution tanks until completely cleaned and heated.

WARNING:

Be careful when using hot solution tanks and alkaline solutions. Follow the alkaline manufacturer's instructions for safe use to prevent injury.

4. Parts must be washed with water until the alkaline solution is removed.

Clean Axle Assemblies:

1. A complete axle assembly can be steam cleaned on the outside to remove dirt.

2. Before the axle is steam cleaned, close or put a cover over all openings in the axle assembly. Examples of openings are breathers or vents in air chambers.

Dry Parts That Have Been Cleaned:

1. Parts must be dried immediately after cleaning and washing.

2. Dry the parts using soft clean paper or cloth rags.

3. Except for bearings, parts can be dried with compressed air.

CAUTION:

Damage to bearings can be caused if dried by rotating with compressed air.

Prevent Corrosion and Rust on Cleaned Parts:

1. Apply axle lubricant to cleaned and dried parts that are not damaged and are to be assembled.

2. To store parts, apply a special material that prevents corrosion and rust to all surfaces. Wrap them in a special paper that prevents corrosion and rust.

Inspect Parts:

It is very important to inspect all parts carefully and completely before the axle or carrier is assembled. Check all parts for wear and replace damaged parts. Replacement of damaged or worn parts now, will prevent failure of the assembly later.

1. Inspect Tapered Roller Bearings:

   Inspect the cup, cone, rollers and cage of all tapered roller bearings in the assembly. If any of the following conditions exist, the bearing MUST be replaced.

section 3 Prepare Parts for Assembly

A. The center of large diameter end of rollers worn level with or below the outer surface. **Figure 36.**

Figure 36

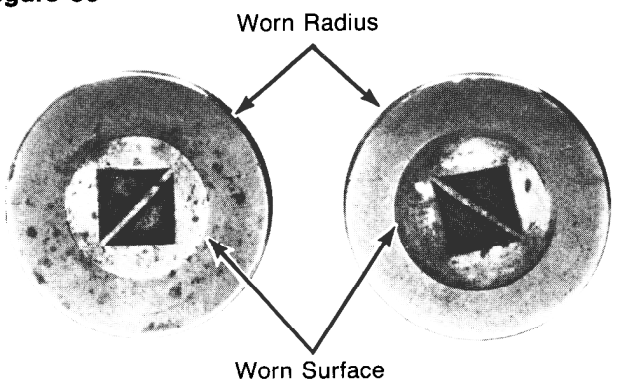

B. The radius at large diameter end of rollers worn to a sharp edge. **Figure 36.**

C. A visible roller groove in the cup or cone inner race surfaces. The groove can be seen at the small or large diameter end of both parts. **Figure 37.**

Figure 37

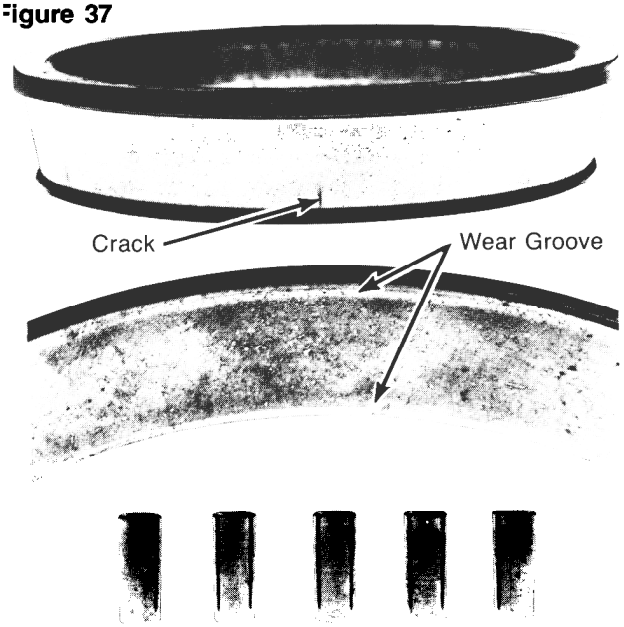

D. Deep cracks or breaks in the cup, cone inner race or roller surfaces. **Figure 37.**

E. Bright wear marks on the outer surface of the roller cage. **Figure 38.**

Figure 38

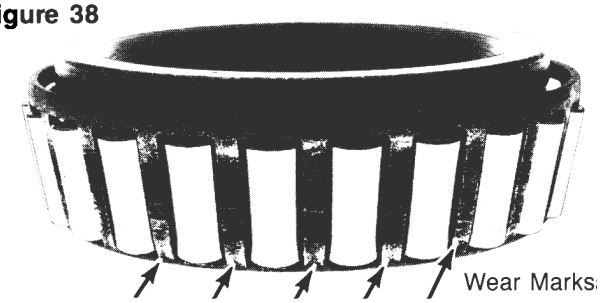

F. Damage on rollers and on surfaces of the cup and cone inner race that touch the rollers. **Figure 39.**

Figure 39

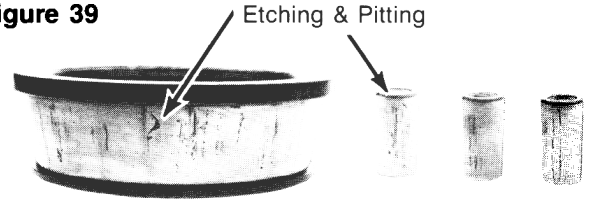

G. Damage on the cup and cone inner race surfaces that touch the rollers. **Figure 40.**

Figure 40

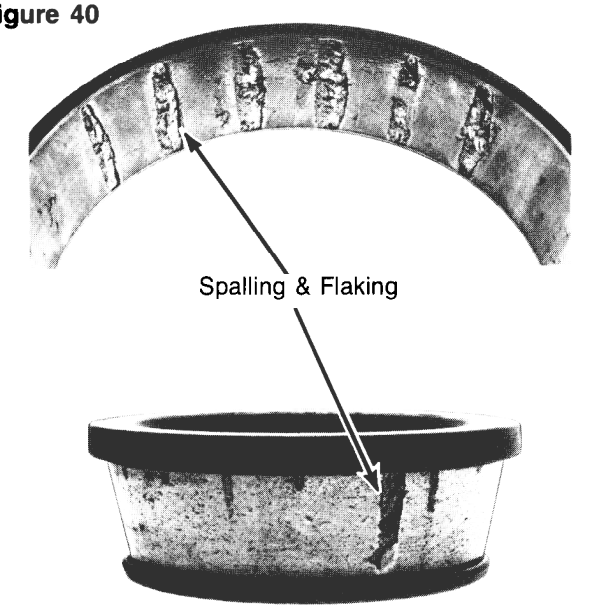

2. Inspect Hyproid Drive Pinion and Ring Gear Sets:

A. Inspect hypoid pinions and gears for wear or damage. Gears that are worn or damaged MUST be replaced.

CAUTION:

Hypoid drive pinions and ring gears are machined in matched sets. When a drive pinion or ring gear of a hypoid set needs to be replaced, both drive gear and pinion must be replaced at the same time.

3. Inspect the Main Differential Assembly:

Inspect the following parts for wear or stress. Parts that are damaged MUST be replaced, **Figure 41.**

Figure 41

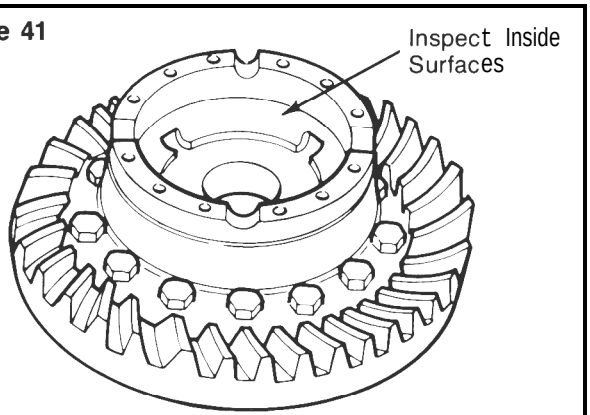

DIFFERENTIAL CASE HALVES

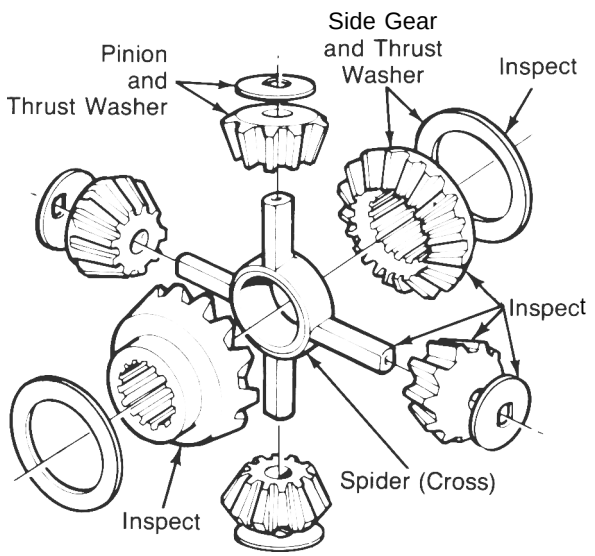

DIFFERENTIAL GEAR NEST ASSEMBLY

A. Inside surfaces of both case halves.

B. Both surfaces of all thrust washers.

C. The four trunnion ends of the spider (cross).

D. Teeth and splines of both differential side gears.

E. Teeth and bore of all differential pinions.

CAUTION:

Always replace thrust washers, differential side gears and pinion gears in sets. A higher stress on parts and early failure of the assembly will occur if a new part is used with parts that are old or worn.

4. Inspect Axle Shafts:

A. Inspect axle shafts for wear and cracks at the flange, shaft and splines. Replace axle shaft if required.

Repair or Replace Parts General:

Replace worn or damged parts of an axle assembly. The following are some examples to check for, repair or replace.

1. Replace any fastener if corners of the head are worn,

2. Replace washers if damaged.

3. Replace gaskets, oil seals or grease seals at the time of axle or carrier repair.

4. Clean parts and apply new silicone gasket material where required when axle or carrier is assembled, **Figure 42.**

Figure 42

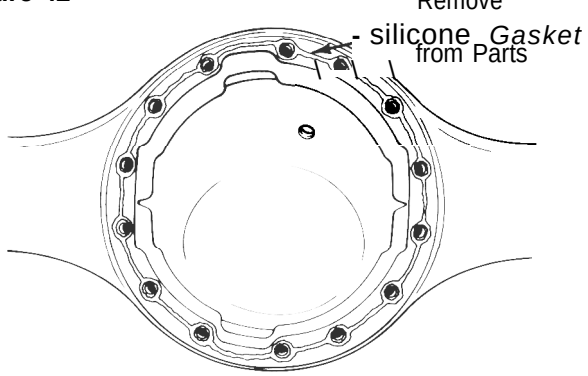

5. Remove nicks, mars and burrs from parts having machined or ground surfaces. Use a fine file, india stone, emery cloth or crocus cloth for this purpose.

6. Clean and repair threads of fasteners and holes. Use a die or tap of the correct size or a fine file for this purpose.

CAUTION:

Threads must be without damage and clean so that accurate adjustments and correct torque values can be applied to fasteners and parts.

7. Tighten all fasteners to the correct torque values. See the chart on page 65 for torque values of fasteners. **Figure 43.** T

Figure 43

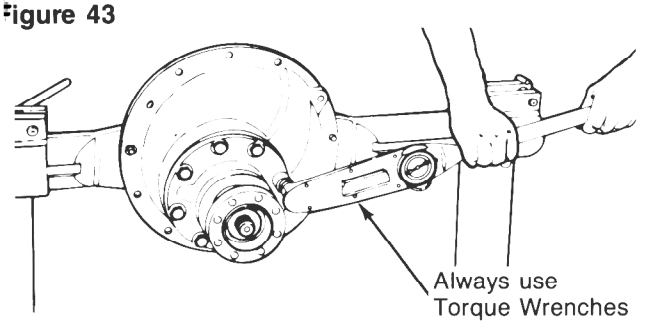

8. DO NOT repair rear axle housings by bending or straightening.

WARNING:

Repair of axle housings by bending or straightening will cause poor or unsafe operation of the axle and early failure.

Repair Axle By Welding:

1. Rockwell International will permit repairing drive axle housing assemblies by welding ONLY in the following areas:

A. Cover welds.

B. Snorkel welds.

C. Housing seam welds between the suspension attaching brackets.

CAUTION:

Welding can be used when the crack or damaged area is within the o/d weld material. Replace the axle housing if the crack extends into the metal next to the old weld. A housing that has damage in the seam weld or cover weld because of overload conditions can be repaired. A repaired housing must be used in correct applications.

WARNING:

Using wrong welding procedures or welding at locations other than the three areas permitted by Rockwell will make the heat-treated component weak. A weak component will cause poor or unsafe operation of the axle and early failure. The following procedure must be used.

2. Welding Procedure

A. Drain the lubricant from the axle assembly.

B. Remove the axle shafts and differential carrier from the axle housing.

WARNING:

Be careful when using a cleaning solvent. Follow the solvent manufacturer's instructions for safe use to prevent injury.

C. Clean the damaged area inside and outside the housing. Cleaning solvent can be used.

D. Grind the damaged weld to the base metal.

E. Warm the complete axle housing to a temperature of 70° F -80° F (21° C -27° C) or higher.

F. Before you start welding, heat the damaged area to be repaired to approximately 300° F (1490°c).

G. Use a 70,000 psi tensile weld material and the correct voltage and amperage for the diameter weld rod used. Examples of weld rods that can be used are E-7018 or ER-70S-3.

CAUTION:

If ***the E-7018 weld rod is used, the rod must be kept dry. Electrodes that are not stored in the correct sealed containers must be heated at 700° F (371° C) for one hour before welding. Wet electrodes must be dried at 180° F (82° C) for one to two hours and then heated at 700° F (371° C) for one hour before welding.***

H. Fill in the Weld Gap as Follows:

CAUTION:

Do not connect the ground cable at any point on the axle assembly that will put a bearing between the ground cable and weld area. If a bearing is between the ground cable and weld, the bearing will be damaged because of electricity arcing. A good location to connect the ground cable is the spring mounting pad of the housing.

1. The snorkle weld MUST be a .375 inch (9.5 mm) fillet.
2. The opening in cover welds MUST be filled level with the old weld.
3. The opening in seam welds MUST be ground out *to 70‰* of the wail thickness. The wall thickness can be measured at the carrier opening of housing.
4. Clean the new weld area. Carefully remove all the rough weld material.
5. Install the differential carrier and axle shafts.
6. Fill the axle assemblv with the correct amount of lubricant. See page 62 or Rockwell Field Maintenance Manual No. 1 for information on lubricants.

NOTE:

To weld brackets or other components to the ax/e housing, use the procedure in Rockwell Technical Service Aid, TSA-2-95.

Bending or Straightening Drive Axle Housings:

Rockwell International is emphatically opposed to any attempt to correct or modify drive axle housings by bending or straightening. All damaged drive axle housings should be replaced.

Also, Rockwell will allow *repair welding on/y* in the following areas: cover welds, snorkel welds, and housing seam welds between the suspension attaching brackets. Repair welding should be performed only if the crack/porosity is located within the weld material.

Replace any housing assemblies where cracks have worked into the parent metal. Also, any housings that have seam weld or cover weld cracks, due to known overloading of the axle, should not be repair welded.

CAUTION:

Bending, straightening, improper repair welding procedures or repair welding at locations other than those indicated above, may result in premature housing failure and affect the safe operation of the axle assembly.

For further information regarding Repair Welding, refer to page 18.

section 4 General Procedures

Use of Dri-Loc Fasteners and Rockwell Liquid Adhesive 2297-C-3747 or Loctite 277

Install New Dri-Loc Fasteners.

1. Clean the oil and dirt from threaded holes. There is no special cleaning required.
2. Assemble parts using the new Dri-Loc fasteners.

CAUTION:

Do not apply adhesives or sealants on new Dri-Loc fasteners or in the threaded holes. If other adhesives or sealants are used, the new Dri-loc adhesive will not function correctly.

3. Tighten the Di-Loc fasteners to the required torque valve for that size fastener. There is no special procedure or torque value required. See the torque chart on page 65. (T)

NOTE:

There is no drying time required for Dri-loc fasteners.

Install Old Dri-Loc Fasteners using Rockwell Liquid Adhesive 2297-C-3747 or Loctite 277.

Figure 44

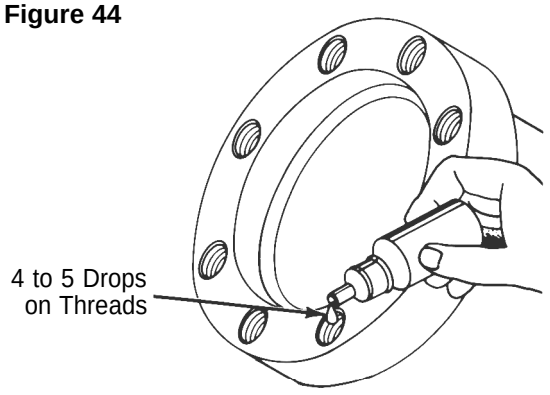

1. Clean the oil and dirt from threaded holes. There is no special cleaning required and it is not necessarv to remove the old Dri-Loc adhesive from threads.
2. Apply four or five drops of Rockwell Liquid Adhesive or Loctite 277 to threaded holes ONLY. Make sure the adhesive is on the threads. **Figure 44.**

CAUTION:

Do not ***apply adhesive to the fastener threads. Air pressure in the hole will push the adhesive out as the fastener is installed.***

3. Tighten the fasteners to the required torque value for that size fastener. There is no special procedure or torque value required. See the torque chart on page 65. **Figure 45.** (T)

Figure 45

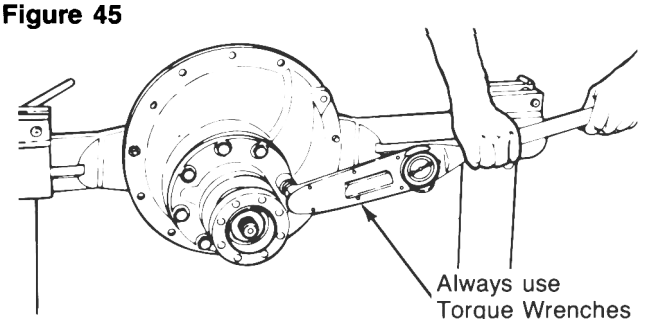

NOTE:

There is no drying time required for **Rockwell** ***Liquid Adhesive 2297-C-3747 or Loctite 277.***

Check Torque Values of Dri-Loc Fasteners not requiring removal.

CAUTION:

If Dri-Loc fasteners do not require removal from components, check **the** ***fasteners for correct torque value as follows:***

1. Apply the MINIMUM amount of torque required for that size fastener. See the torque chart on page 65. The fastener MUST NOT rotate. **Figure 45.**

2. If the fastener rotates any amount, remove the fastener from the component and apply adhesive to the threaded hole. Follow the procedure for installing old Dri-Loc fasteners.

Remove Dri-Loc Fasteners.

If it is difficult to remove Dri-Loc fasteners from components, the strength of Dri-Loc, Rockwell adhesive or Loctite 277 can be decreased by heating. Use the following procedure:

1. Heat the fastener for three to five seconds ONLY and try to loosen the fastener with a wrench. DO NOT use an impact wrench to loosen the fastener or hit the fastener with a hammer.

2. Repeat step 1 until the fastener can be removed.

⚠ *CAUTION:*

Do not exceed 350° F (+177° C) maximum. Heating must be done slowly to prevent thermal stresses in the other components.

Application of Rockwell Adhesive 2297-T-4180 or 1199-Z-3250 in Bearing Bores for the Differential

- Use adhesive 1199-Z-3250 for SQ series axles.
- Use adhesive 2297-T-4180 for all other axles.

1. Clean the oil and dirt from outer diameters of bearing cups and bearing bores in the carrier and bearing caps. There is no special cleaning required.

2. Apply axle lubricant to the bearing cones and the inner diameters of the bearing cups of the main differential. DO NOT get oil on the outer diameter of the bearing cup and DO NOT permit oil to drip on the bearing bores.

3. Apply a single continuous bead of the adhesive to the bearing bores in the carrier and bearing caps. Apply the adhesive 360° around the smooth, ground surfaces ONLY, DO NOT put adhesive on threaded areas. **Figure 46.**

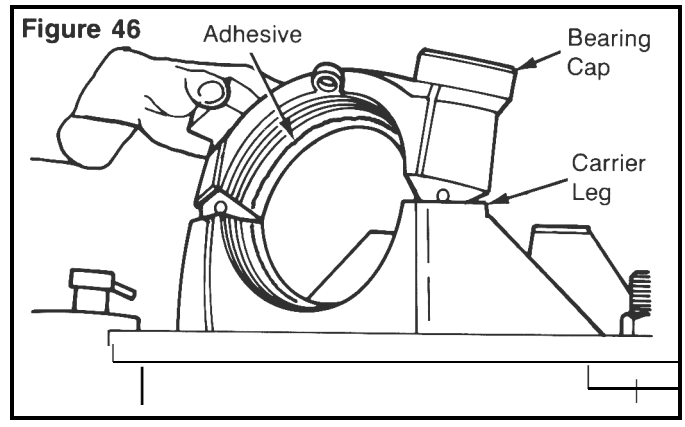

NOTE:

The Rockwell adhesives will become hard (dry) in approximately two hours. The following two steps of the procedure must be done in two hours from the time the adhesive was applied. If two hours have passed since application, clean the parts again and apply new adhesive.

4. Install the main differential assembly, bearing cups and bearing caps into the carrier. Use the normal procedure, see page 42.

5. Adjust preload of the differential bearings, backlash and tooth contact patterns of the gear set as required using the normal procedures, See pages 43-51.

Application of Silicone Gasket Material

NOTE:

The following silicone gasket products can be used on Rockwell-components

a. Dow Corning Silicone Rubber Sealant, *No, 732* Black.

b. General Electric No, RTV-1473 Black.

c. From Rockwell International:

- 40 pound containers, Part No. 1199-Q-2981
- Ten ounce tubes, Part No. 1250-X-388
- Three ounce tubes, Part No. 1199-T-3842

⚠ WARNING:

Small *amounts of acid vapor are present when applying silicone gasket material. For this reason, be sure there is good ventilation* in the work area. If the silicone gasket material gets *in the eyes, flush the eyes with water for 15 minutes. Have the eyes checked by a doctor.*

1. Remove all old gasket material from both surfaces. **Figure 47.**

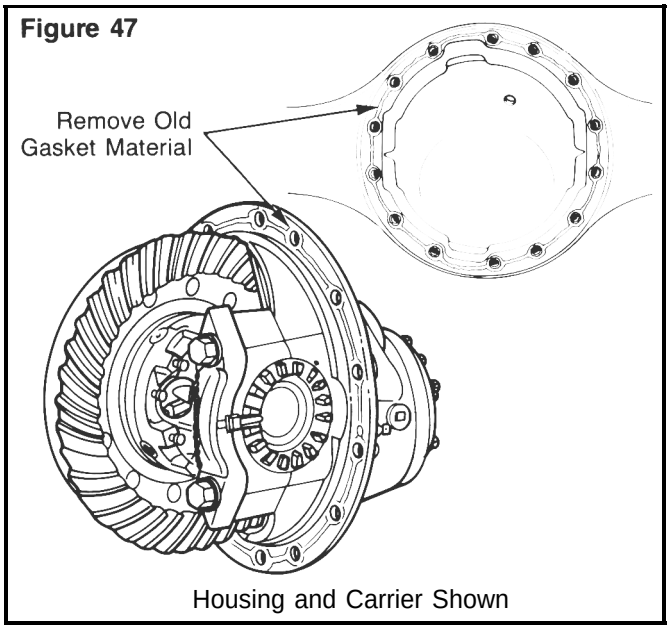

2. Clean the surfaces where silicone gasket material will be applied. Remove all oil, grease, dirt and moisture.

3. Dry both surfaces.

4. Apply a 1/8 inch diameter continuous bead of the silicone gasket material around one surface. Also apply the gasket material around the edge of all fastener holes in that surface. **Figure 48.**

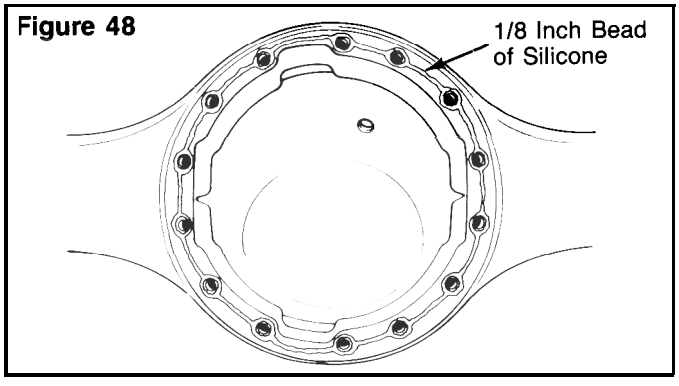

⚠ CAUTION:

The amount of silicone gasket material applied must not exceed a 1/8 inch diameter bead. Too much gasket material can block lubrication passages.

5. Assemble the components immediately to permit the silicone gasket material to compress evenly between the parts. Tighten fasteners to the required torque value for that size fastener. There is no special procedure or torque value required. See Torque Chart on page 65. T
6. Wait 20 minutes before the assembly is filled with lubricant.

NOTE:

The *Rockwell adhesive and gasket products are available from:*

Rockwell International Corp.
Florence Distribution Center
7975 Dixie Highway
Florence, Kentucky 41042

Installing Tight Fit Yokes using the Three Piece Pilot Tool

NOTE:

A* three piece installation tool is required to correctly *install yokes with interference fit splines.* The yoke installation tools are not available from Rockwell International but can be purchased from OTC Tool and Equipment Division, 655 Eisenhower Drive, Owatonna, MN 55060. Specify the Rockwell axle model *when ordering. See the following list.

Axle Series	Position	OTC Tool Number
H-172		D80T-4859-A
L-172		D80T-4859-A
P-174		D80T-4859-A
R-155		D80T-4859-A
R-255		D80T-4859-A
R-170		D80T-4859-B
R-270		D80T-4859-A
s-170		D80T-4859-B
U-170		D80T-4859-B
U-240		D80T-4859-A
U-270		D80T-4859-A
U-280		D80T-4859-A
W-280		D80T-4859-A
RS-13-120*		D89T-4859-B
RS-15-120*		D89T-4859-B
RS-15-21O*		D89T-4859-B
RS-17-140*		D89T-4859-B
RS-17-220*		D89T-4859-B
RS-19-145*		D89T-4859-B
RS-20-230*		D89T-4859-B
RS-21-145*		D89T-4859-B
RS-23-160•		D89T-4859-A
RS-23-180*		D89T-4859-A
RS-23-240*		D89T-4859-B
RS-26-180•		D89T-4859-A
RS-30-180*		D89T-4859-A
RT-34-145*	Forward Input	D89T-4859-B
	Forward Output	D89T-4859-B
	Rear Input	D89T-4859-B
RT-40-145*	Forward Input	D89T-4859-B
	Forward Output	D89T-4859-B
	Rear Input	D89T-4859-B
RT-44-145*	Forward Input	D89T-4859-B
	Forward Output	D89T-4859-B
	Rear Input	D89T-4859-B
RT-46-160•	Forward Input	D89T-4859-A
	Forward Output	D89T-4859-B
	Rear Input	D89T-4859-A
RT-48-180"*	Forward Input	D80T-4859-B
	Forward Output	D80T-4859-A
	Rear Input	D89T-4859-A
RT-52-160•	Forward Input	D89T-4859-A
	Forward Output	D89T-4859-B
	Rear Input	D89T-4859-A
RT-52-180'*	Forward Input	D80T-4859-B
	Forward Output	D80T-4859-A
	Rear Input	D89T-4859-A
RT-58-180'•	Forward Input	D80T-4859-B
	Forward Output	D80T-4859-A
	Rear Input	D89T-4859-A
SL-100	Forward Input	D80T-4859-A
	Forward Output	D80T-4859-B
	Rear Input	D80T-4859-B
SQ-100	Forward Input	D80T-4859-A
	Forward Output	D80T-4859-A
	Rear Input	D80T-4859-A
SQR-100	Forward Input	D80T-4859-A
	Forward Output	D80T-4859-A
	Rear Input	D80T-4859-A
SSHD	Forward Input	D80T-4859-B
	Forward Output	D80T-4859-A
	Rear Input	D80T-4859-A
STHD	Forward Input	D80T-4859-B
	Forward Output	D80T-4859-A
	Rear Input	D80T-4859-A
SR-170	Forward Input	D80T-4859-B
	Forward Output	D80T-4859-A
	Rear Input	D80T-4859-B
ST-170	Forward Input	D80T-4859-B
	Forward Output	D80T-4859-A
	Rear Input	D80T-4859-B
Su-170	Forward Input	D80T-4859-B
	Forward Output	D80T-4859-A
	Rear Input	D80T-4859-B
SR-270/280	Forward Input	D80T-4859-B
	Forward Output	D80T-4859-A
	Rear Input	D80T-4859-A
ST-270/280	Forward Input	D80T-4859-B
	Forward Output	D80T-4859-A
	Rear Input	D80T-4859-A
SU-270/280	Forward Input	D80T-4859-B
	Forward Output	D80T-4859-A
	Rear Input	D80T-4859-A
SW-280	Forward Input	D80T-4859-B
	Forward Output	D80T-4859-A
	Rear Input	D80T-4859-A
SFDD-4640	Forward Input	D80T-4859-B
	Forward Output	D80T-4859-A
	Rear Input	D80T-4859-A

*Axle models have metric size threads on drive pinions, input shafts and output shafts.
* *Metric threads only on drive pinions of rear/rear axles.

CAUTION:

Do not install tight fit yokes on shafts using a hammer or mallet. A hammer or mallet will damage the yoke.

1. Apply axle lubricant on the yoke seal.

2. Check all surfaces of the yoke hub for damage. If necessary, polish the yoke hub with an india stone, emery cloth or crocus cloth.

3. Install the pilot shaft on the input shaft of the assembly. **Figure 49.**

Figure 49

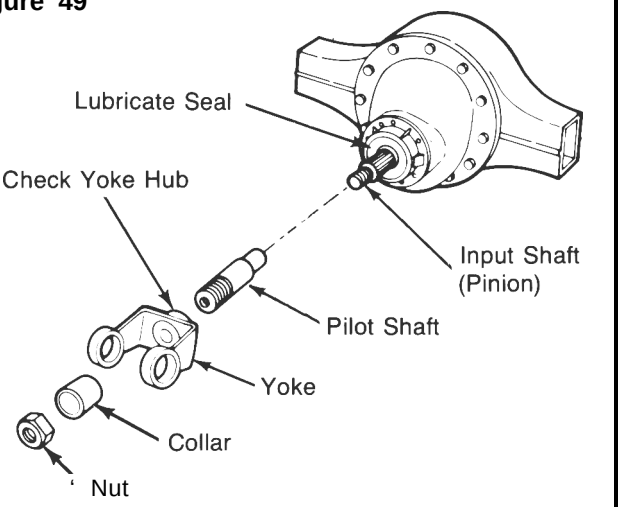

4. Slide the yoke over the pilot shaft. Align the yoke splines with the shaft splines.

5. Put the collar on the pilot shaft and slide it against the yoke.

6. Install the nut on the pilot shaft and against the collar. Tighten the nut against collar until the yoke is completely in position on the shaft. Sometimes a torque value of 200 lb.—ft. on the nut is required to install the yoke correctly.

CAUTION:

Do not use the assembly yoke nut for installation purposes. Use the nut that is supplied with the three piece pilot tool.

7. Remove all parts of the pilot tool from the shaft. (Pilot shaft, collar and nut).

8. Install the washer (if required) and yoke nut on the shaft, Tighten the nut to the required torque value. See the torque chart on page 65. T

Gear Set Information (Drive Pinion and Ring Gear Marks)

NOTE:

Before a new gear set is installed in the carrier read the following information. Always check the gear set for correct marks to make sure the gears are a matched set.

The location of the marks are *shown in Figure 50.*

Figure 50

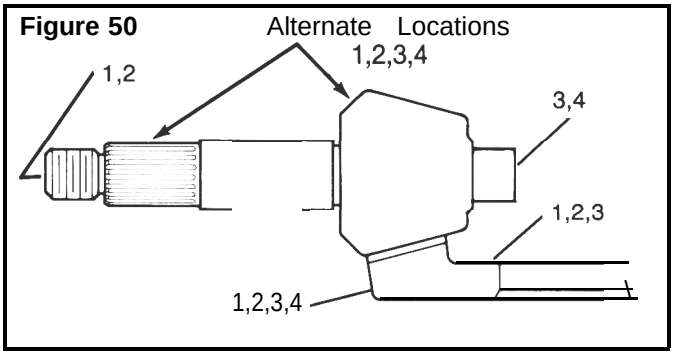

1. Part Number

A. Examples of gear set part numbers: Conventional ring gear, 36786. Conventional drive pinion, 36787. Generoid ring gear, 36786 K or 36786 K2. Generoid drive pinion, 36787 K or 36787 K2.

NOTE:

The last *digit* in part numbers *for* Generoid gears is a letter or letter and number.

B. Location on Drive Pinion: End at threads.

C. Location on Ring Gear: Front face or outer diameter.

2. Tooth Combination Number

A. Example of a tooth combination number: 5-37.

NOTE:

A 5-37 gear set has a 5 tooth drive pinion and a 37 tooth ring gear.

B. Location on Drive Pinion: End at threads.

C. Location on Ring Gear: Front face or outer diameter.

3. Gear Set Match Number

Rockwell drive pinions and ring gears are available only as matched sets, Both gears of a set have a match number.

A. Example of a gear set match number: M29.

NOTE:

A gear set match number has any combination of a number or letter and number.

B. Location on Drive Pinion: End of gear head.

C. Location on Ring Gear: Front face or outer diameter.

4. Pinion Cone Variation Number

NOTE:

The pinion cone variation number* is *not used* when *checking for a matched gear set. The number is used when you adjust the depth of the pinion* in *the carrier. See the procedure for adjusting the shim pack thickness under the pinion cage on Pages 35.37.

A. Examples of pinion cone variation numbers: PC+ 3, PC-5, +2, -1, + .01 mm or -.02mm. **Figure 51.**

Figure 51

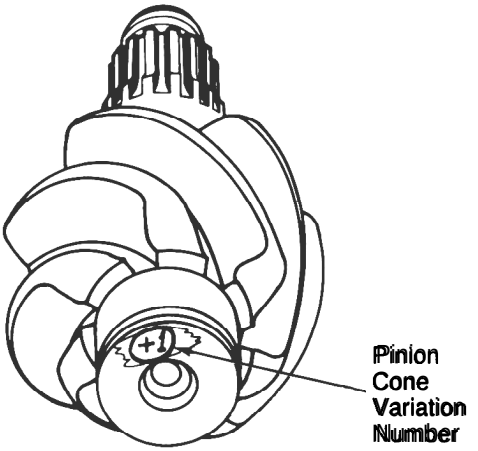

B. Location on Gear Set: End of pinion gear head or outer diameter of ring gear.

Vehicle Towing Instructions:

When towing or “piggybacking” a vehicle with the wheels of one or both drive axles on the ground, it is possible to damage the axles or cause additional damage if the wrong procedure is used before towing begins. Rockwell recommends that you use the following procedure.

Before Towing:

1. If the drive axle(s) are equipped with a main differential lock, shift the differential to the unlocked (disengaged) position. The differential lock light in the cab of the vehicle will go out.

NOTE:

If the ***air supply to the differential lock is damaged, the differential will unlock (disengage)*** when air pressure is lost.

2. Identify each axle shaft so that they can be installed in the same location after repair is completed.

3. Remove both axle shafts of drive axles that will remain on the ground while the vehicle is being towed. Follow the procedures described in the Disassembly section of this manual.

NOTE:

If the axle(s) are equipped with main differential lock, the left-hand *front axle shaft and right-hand rear axle* shaft of tandem axles and the right-hand axle shaft of single axles have two sets of splines. One set of splines is engaged with the side gear and one set is engaged with the shift collar. It may be necessary to rotate the shaft when pulling it through the shift collar. Figure 51A (single *or* rear of tandem axle shown).

Figure 51A RIGHT HAND SIDE OF DIFFERENTIAL CARRIER

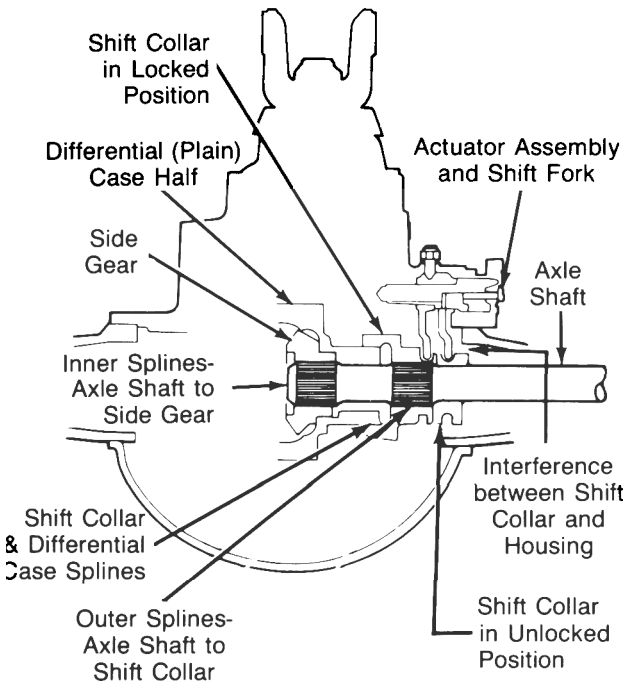

4. Install a cover over the openings of both hubs to retain the lubricant and keep dirt from entering the hub.

Before Operating the Vehicle:

1. Remove the covers from the hubs.

2. If the drive axle(s) are equipped with a main differential lock, shift the differential to the unlocked (disengaged) position. Install the axle shafts with two sets of splines and new gaskets in the correct locations as follows:

A. Push the axle shaft and gasket into the hub and housing until the shaft stops against the shift collar.

B. Push down and in on the axle shaft flange and rotate the shaft until the splines of the shaft and collar are engaged.

C. Push the axle shaft further into the housing until the shaft stops against the differential side gear.

D. Push down on the axle shaft flange and rotate the shaft until the splines of the shaft and side gear are engaged.

E. Push the axle shaft completelv into the housing until the flange and gasket are flush against the hub.

3. Install the other axle shafts at the locations from where they were removed. Follow the procedures described in the Assembly section of this manual.

4. Check the lubricant level in the axles and hubs where the axle shafts were removed. Add lubricant if necessary. See the Lubrication section of this manual for information.

Assembly section 5

Assemble the Drive Pinion, Bearings and Bearing Cage

1. Put the bearing cage in a press. **Figure 52.**

Figure 52

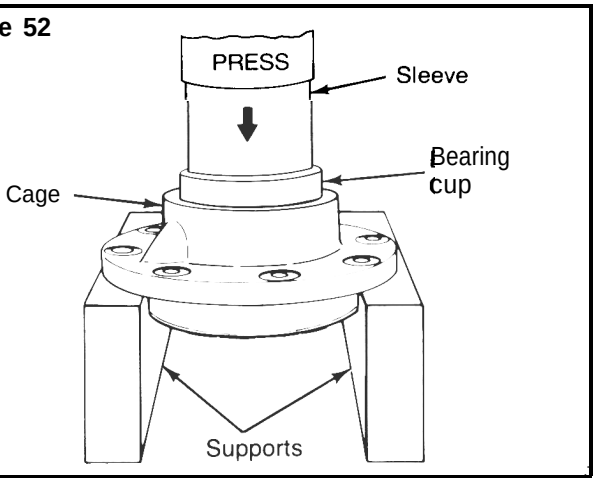

2. Support the bearing cage with metal or wood blocks.

3. Press the bearing cup into the bore of bearing cage until cup is flat against bottom of bore. Use a sleeve of the correct size to install bearing cup. **Figure 52.**

NOTE:

Use the same procedure for both bearing cups.

4. Put the drive pinion in a press, gear head (teeth) toward the bottom. **Figure 53.**

Figure 53

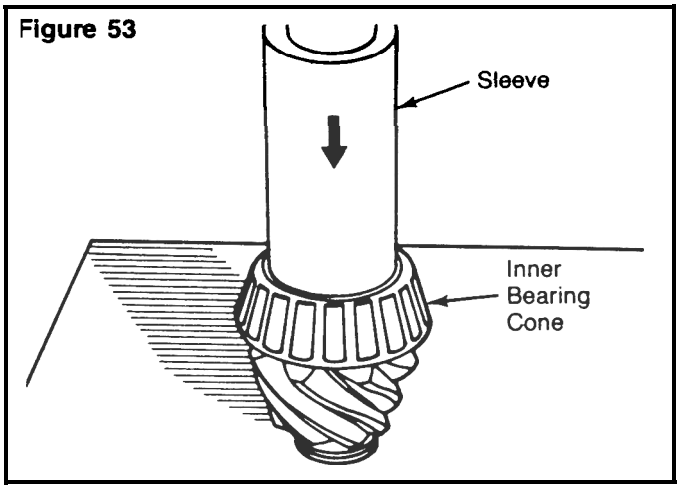

5. Press the inner bearing cone on the shaft of the drive pinion until the cone is flat against the gear head. Use a sleeve of the correct size against the bearing inner race.

NOTE:

Some spigot bearings are fastened to the drive pinion with a snap ring, some are fastened with a peening tool, and some are a two-piece bearing assembly with the inner race pressed on the nose of the pinion and the outer race pressed into its bore in the carrier. B-140 single rear axles and SQHP rear rear axles do not use spigot bearings. Use the following procedure to install the spigot bearing, then continue with steps 6 through 9 on page 31.

Installing the One-Piece Spigot Bearing on the Drive Pinion with Snap Ring

NOTE:

This procedure applies to all axles except:

- ***All H-170 and B-140 single rear axles.***
- ***Some 120, 125 and 160 Series single axles. These axles may use snap rings.***
- ***All SQHP rear tandem axles.***
- ***Some SL-1OO, SQ-1OO and 160 and 180 Series rear rear tandem axles. These axles may use snap rings.***

A, Put the drive pinion in a press, gear head (teeth) toward the top. **Figure 54.**

B. Press the spigot bearing on the end of drive pinion until the bearing is flat against the gear head. Use a sleeve of the correct size against the bearing inner race. **Figure 54.**

Figure 54

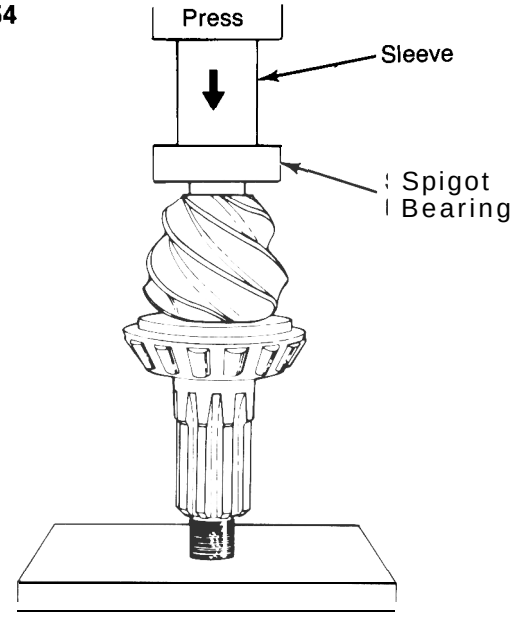

C. On R-155 and R-163 single rear axles, and SRHD, SSHD, STHD and SUHb rear rear axles, install the dished washer on the end of the drive pinion.

D. Install the snap ring' into groove in end of drive pinion with snap ring pliers. **Figure 55**.

Figure 55

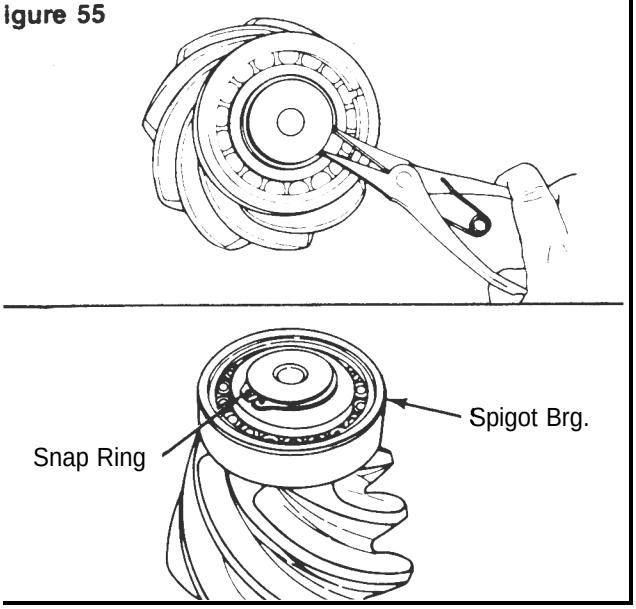

Peening the One-Piece Spigot Bearing on the Drive Pinion (without Snap Ring)

NOTE:

This procedure applies to the following axles:

- ***All H-170 single rear axles.***
- ***Some 120 and 125 Series single axles. These axles may use snap rings.***
- ***Some SL-1OO, SQ-1OO and 180 Series rear rear tandem axles. These axles may use snap rings.***

Specification:

Apply 3,000 kg (6,614 lb.) force on a 10 mm or .375 inch ball.
Peen the end of drive pinion at a minimum of five points. **Figure 56.**

Figure 56

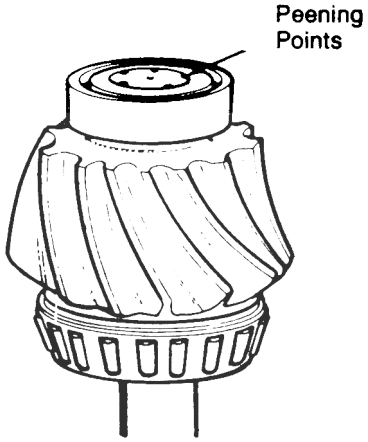

When a peen tool and press **(Figure 57)** are used, calculate the force required on the tool as follows.

3,000 kg (6,614 lb.) x amount of balls in tool = kilograms or pounds

Example: 6,614 lb. x 3 balls = 19,842 pounds

'Some Rockwell carriers do not have the parts described.

For information about the peen tool write to Rockwell International, Communications Department, 2135 West Maple Road, Troy, Michigan 48084. **Figure 57.**

Figure 57

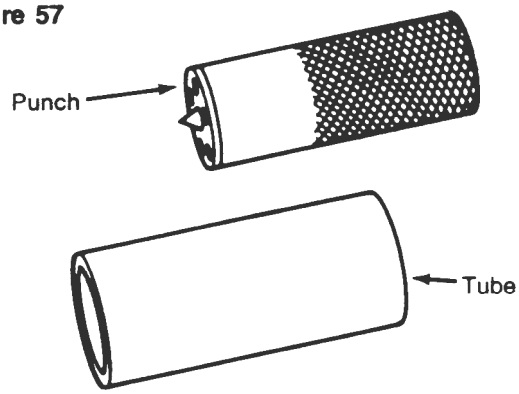

A. Put the drive pinion and the tube of the peen tool in a press, spigot bearing toward the top. **Figure 58.**

B. Calculate the amount of force that will be required on the peen tool. See specification and example calculation.

Figure 58

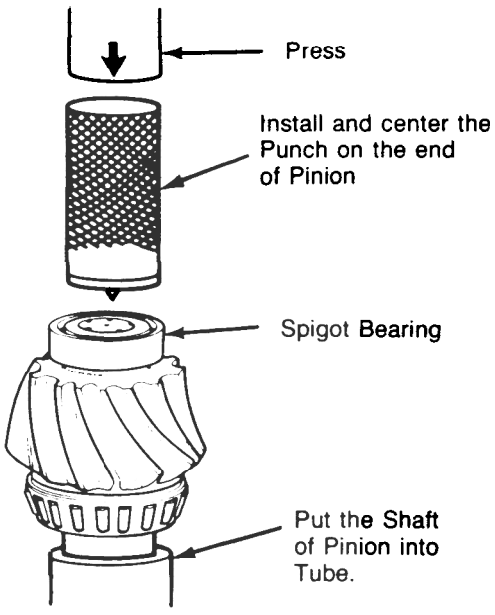

C. Put the punch of the peen tool over the end of the pinion and spigot bearing. Apply the required amount of force on the punch. **Figure 58.**

⚠ CAUTION:

Do not align new points with grooves in end of drive pinion or in old points. If the new peen points are put in the wrong areas, the spigot bearing will not be held correctly on the pinion.

D. Rotate the punch as many times as required for a minimum of five points. Repeat step C for each point.

NOTE:

If a three ball peen tool is used, rotate the tool 180° (degrees).

Installing and Staking the Two-Piece Spigot Bearing on the Drive Pinion

NOTE:

This procedure applies to some 160 Series single rear axles and rear rear tandem axles. These axles may also use a one-piece spigot bearing with a snap ring retainer.

The inner race of two-piece spigot bearings must be staked in place on RS and RR-160 series rear axles. Before you stake the pinion, you must heat the pinion stem to soften it.

NOTE:

Kent-More Kit J-39039 includes the staking tool, temperature indicating liquid, heating shield and plastigage needed for this job.

A. Apply two stripes of temperature indicating liquid on the pinion stem from the top to the bottom. **Figure 59.** Apply a green stripe to indicate 400°F and a blue stripe to indicate 500°F.

Figure 59

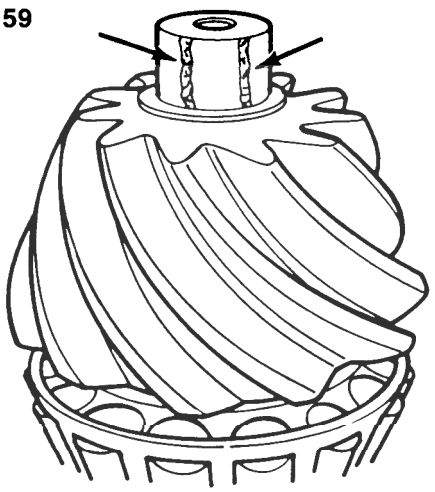

B, Put the heating shield over the pinion stem so that you can see the temperature indicating liquid through the hole in the shield. **Figure 60.**

Figure 60

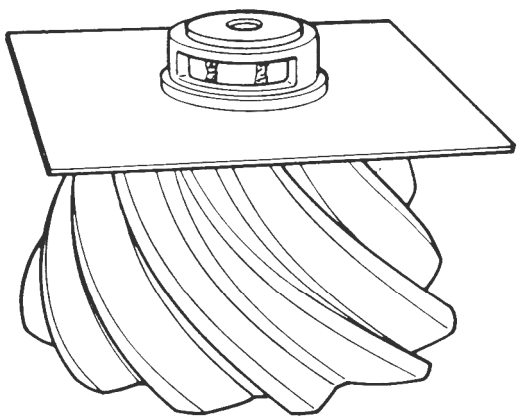

WARNING:

To protect yourself from injury, wear safety glasses when you do steps C-F. Wear heat resistant gloves while you do steps C and D.

CAUTION:

Do not heat the pinion stem without the heat shield in place. Also, do not overheat the pinion stem or you will weaken the metal which can cause early failure. Correct heating will take approximately 25-35 seconds, depending on how hot the torch is.

C Light and adjust the torch until the white part of the flame is approximately 1/4 inch long. Keep the white part of the flame approximately 1/8 inch from the top of the stem. **Figure 61.** Move the flame around the outer diameter of the top of the pinion stem. The green temperature indicating liquid will turn black before the blue liquid does. Heat the stem until the blue liquid turns black at a point in the middle of the window.

Figure 61

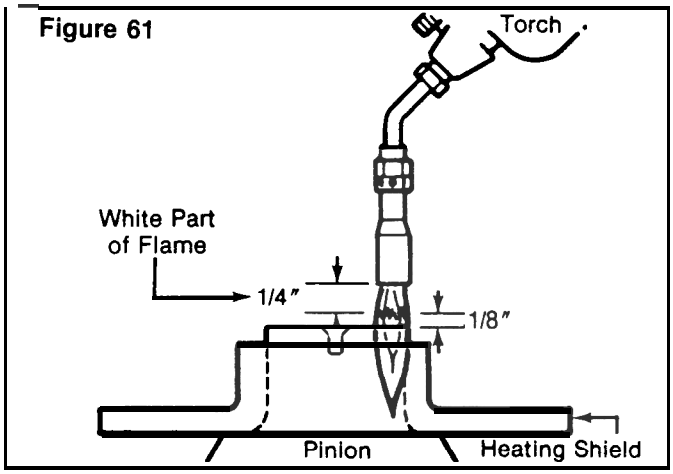

D. Remove the flame and the heat shield from the pinion. Let the pinion air cool for 10 minutes. Use a razor blade to remove the temperature indicating liquid.

CAUTION:

Do not press or hit directly on the new inner race in step E or you will damage the bearing.

E, Use a press, if available, or a brass hammer to install the new inner race. Use the old inner race as a sleeve. The race is completely seated when you cannot fit a 0.002 inch feeler gauge between the race and the pinion shoulder.

NOTE:

If you cannot hold the races in place, try using the staking tool instead of the old race to start the new race on the stem. But, use the old race to completely seat the new race.

NOTE:

In Step F, you do not need to use the plastigage for every stake. Just use it until you are sure you are hitting the punch with the correct force.

F. Put the staking tool over the bearing race. Cut a one inch piece from the green plastigage strip and put in between the punch and the staking tool. **Figure 62** — View A. Hit the punch with a two-three pound brass hammer to upset the end of the pinion stem, Then, remove the strip and measure its thickness against the gauge on the wrapper that the strip came in. The strip must not be less than 0.003 inch thick. This thickness indicates that you are using enough force when you hit the punch. If the strip is too thin, then you must hit the punch harder so the stake will hold the race in place, Rotate the tool and repeat this procedure until there are six evenly spaced stake marks around the stem. **Figure 62 — View B.**

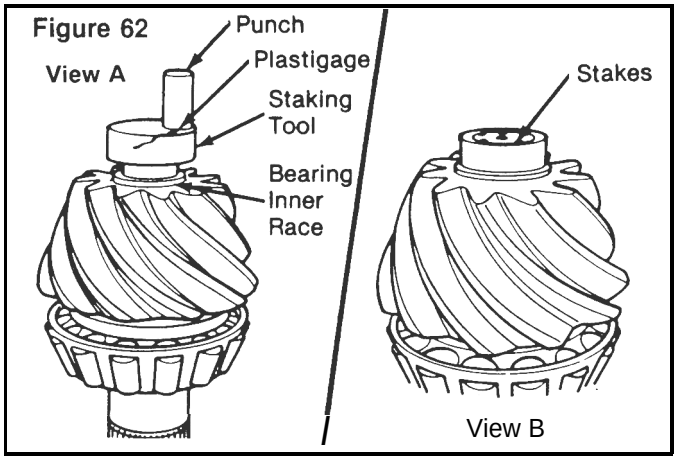

G. With a press or a soft mallet and sleeve, install the outer race and roller assembly into its bore in the carrier. Use a sleeve that is the same size as the outer race and press the bearing until it is squarely against the shoulder in the bottom of its bore.

6. Apply axle lubricant on bearing cups in the cage and bearing cones,

7. Install the drive pinion into the bearing cage.

8. Install the bearing spacer or spacers on pinion shaft against the inner bearing cone. **Figure 63.**

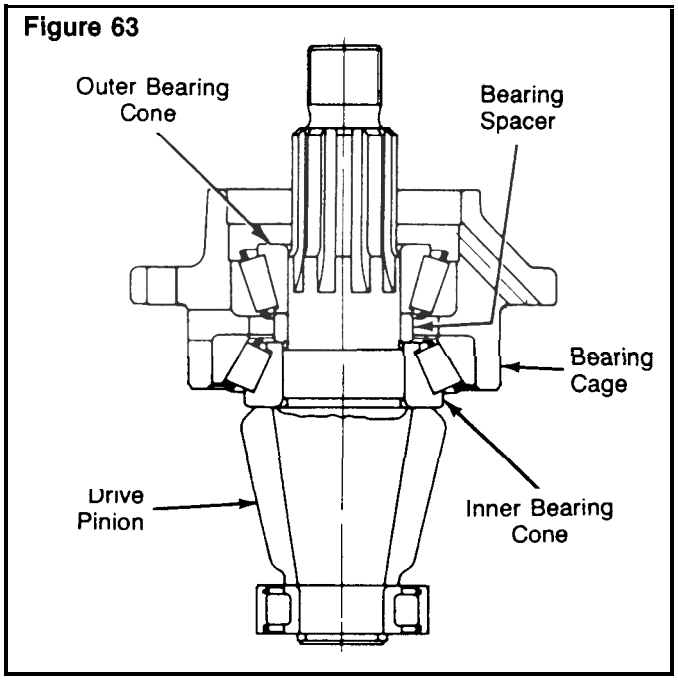

NOTE:

The spacer or spacers control the preload adjustment of the drive pinion bearings.

9. Install the outer bearing cone on pinion shaft against the spacer. **Figure 63.**

NOTE:

DO NOT install pinion seal in bearing cage. Continue with adjusting preload of pinion bearings.

Adjust Preload of Pinion Bearings

Specifications:

New pinion bearings -5 to 45 lb.-in. (.56 to 5.08 N.m) torque.

Used pinion bearings in good condition -10 to 30 lb.-in. (1.13 to 3.39 N.m) torque.

Press Method

NOTE:

If ***a press is not avaiiable, or the press does not have a pressure gauge, use the yoke or flange method to adjust preload. See page 33.***

A. Put the drive pinion and cage assembly in a press, gear head (teeth) toward the bottom.

Figure 64

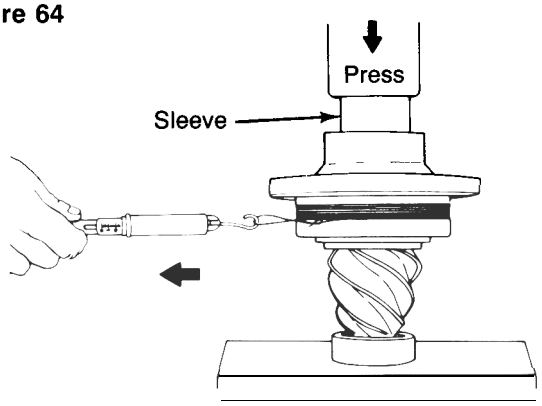

Figure 65

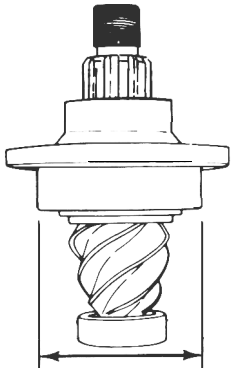

B. Install a sleeve of the correct size against the inner race of the outer bearing. **Figure 64.**

C. Apply and hold the correct amount pressure to the pinion bearings. See chart 1. As pressure is applied rotate the bearing cage several times so that bearings make normal contact.

D. While pressure is held against the assembly, wind a cord around the bearing cage several times.

E. Attach a spring scale to the end of the cord.

F. Pull the cord with scale on a horizontal line. As the bearing cage rotates, read the value indicated on scale. Make a note of reading. **Figure 64.**

NOTE:

Do not read starting torque. Read only the torque value after the cage starts to rotate. Starting torque will give a false reading.

G. Measure the diameter of bearing cage where the cord was wound. Measure in inches or centimeters. **Figure 65.**

H. Divide the dimension in half to get the radius. Make a note of radius dimension.

I. Use the following procedure to calculate the bearing preload (torque).

Pounds pulled x Radius (inches) =
lb.-in. preload x .113 = N.m preload OR
Kilograms pulled x Radius (centimeters) =
kg-cm preload x .098 = N.m preload

Examples:
Reading from spring scale = 7.5 pounds (3.4 kg)
Diameter of bearing cage= 6.62 inches (1 6.8 cm)
Radius of bearing cage = 3.31 inches (8.4 cm)

7.5 lb. x 3.31 in, = 24.8 in.-lb. preload x .113 = 2.8 N.m preload OR
3.4 kg x 8.4 cm = 28.6 kg-cm preload x .098 = 2.8 N.m preload

J. If the preload (torque) of pinion bearings is not within specifications, do the following procedure then repeat steps A to 1.

To increase preload, install a thinner bearing spacer. To decrease preload, install a thicker bearing spacer.

K. Check the bearing preload with the drive pinion and cage assembly installed in the carrier. Follow the procedures to adjust preload of pinion bearings, yoke or flange method.

CHART 1

Thread Size of Pinion Shaft	Press Pressure Needed on Bearings for Correct Preload. pounds/tons (kg/metric tons)	T Torque Value Needed on Pinion Nut for Correct Bearing Preload. lb.-ft. (N.m)
7/8''-20	22,000 / 11 (9979 / 10)	200-275 (271-373)
1''-20	30,000 / 15 (13608 / 13.6)	300-400 (407-542)
1 1/4''-12	54,000 / 27 (24494 / 24.5)	700-900 (949-1220)
1 1/4''-18	54,000 / 27 (24494 / 24.5)	700-900 (949-1220)
1 1/2''-12	54,000 / 27 (24494 / 24.5)	800-1100 (1085-1491)
1 1/2''-18	54,000 / 27 (24494 / 24.5)	800-1100 (1085-1491)
1 3/4''-12	50,000 / 25 (22680 / 22.7)	900-1200 (1220-1627)
2''-12	50,000 / 25 (22680 / 22.7)	1200-1500 (1627-2034)

Yoke or Flange Method

A. Install the input yoke or flange, nut and washer* on the drive pinion. The yoke or flange MUST be against the outer bearing.

NOTE:

If the fit between the yoke or flange splines and drive pinion splines are tight, use a press to install the yoke or flange. **Figure 66.**

If ***a press is not available, use the three piece pilot tool for installation. See the procedure on page 22.***

Figure 66

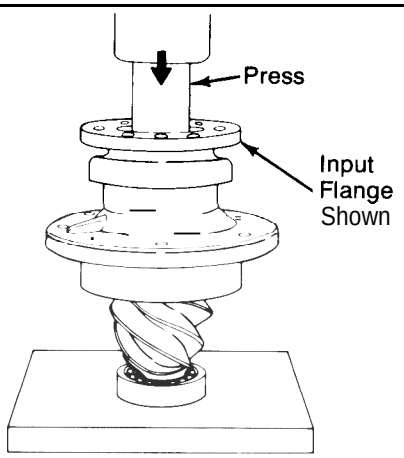

⚠ *CAUTION:*

Do not install tight fit yokes or flanges on shafts using a hammer or mallet. A hammer or mallet will damage the yoke or flange.

B. Temporarily install the drive pinion and cage assembly in the carrier. Do not install shims under the bearing cage. **Figure 67.**

Figure 67

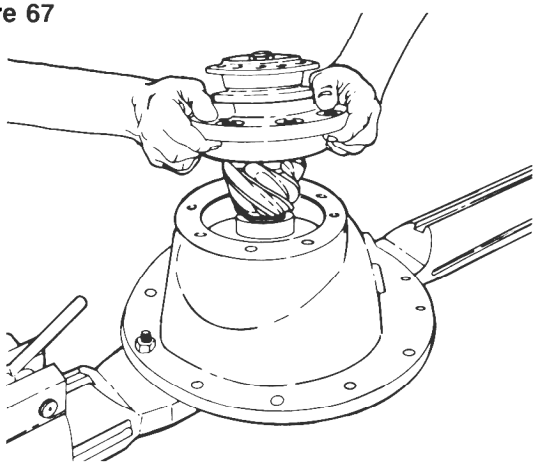

C. Install the bearing cage to carrier capscrews. Washers are not required at this time. Tighten the capscrews hand tight.

D. Fasten a yoke or flange bar to the input yoke or flange. The bar will hold the drive pinion in position when the nut is tightened. **Figure 68.**

Figure 68

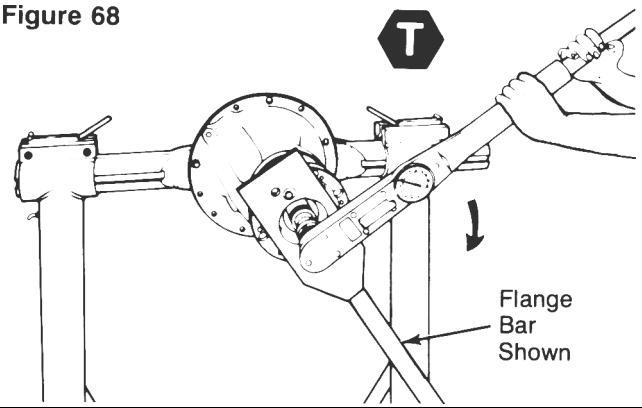

E. Tighten the nut on drive pinion to the correct torque value. **Figure 68.** T
See chart 1 on page 32.

F. Remove the yoke or flange bar.

G. Attach a torque wrench on the drive pinion nut. Rotate the drive pinion and read the value indicated on torque wrench. **Figure 69.**

Figure 69

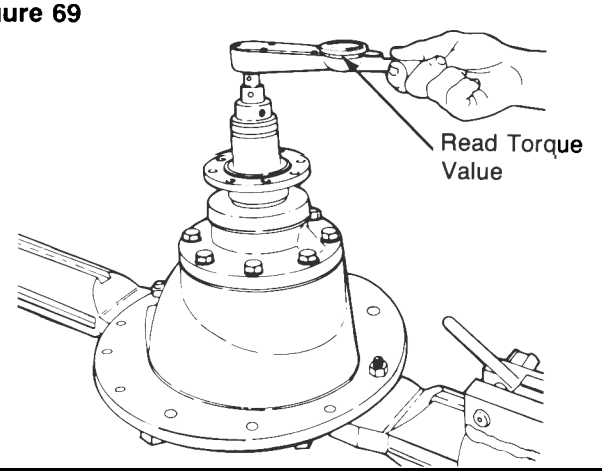

"Some Rockwell carriers do not have the parts described.

. If the preload (torque) of pinion bearings is not within specifications, remove the pinion and cage assembly from carrier. Do the following procedure then repeat steps A to G.

To increase preload, install a thinner bearing spacer.

To decrease preload, install a thicker bearing spacer.

10. After adjusting preload of pinion bearings, remove the drive pinion and bearing cage from carrier. Follow steps 1 to 5 on page 10.

11. If the carrier has a cover and seal assembly over the bearing cage, install a new seal into cover as follows.

A. Apply Lubriplate or grease used for wheel bearings to the seal lips and cavities between lips. The Rockwell specification for grease is 0-617-A, O-617-B or equivalent.

B. Apply a sealing compound on the outer diameter of seal.

C. Put the cover in a press, large diameter toward the top.

D. Support the cover under the small diameter opening with metal or wood blocks. **Figure 70.**

Figure 70

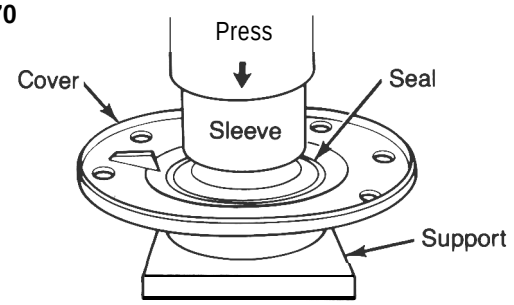

E. Press the seal into cover until seal is flat against the bottom of bore. Use a sleeve or seal driver of the correct size that fits against the metal retainer of seal. **Figure 70.**

NOTE:

If *a press is not available, use a mallet and the sleeve or driver to install the seal.* Figure 71.

WARNING:

Wear safe eye protection. Do not hit steel parts or tools with a steel hammer. Parts or tools can break and cause injury.

Figure 71

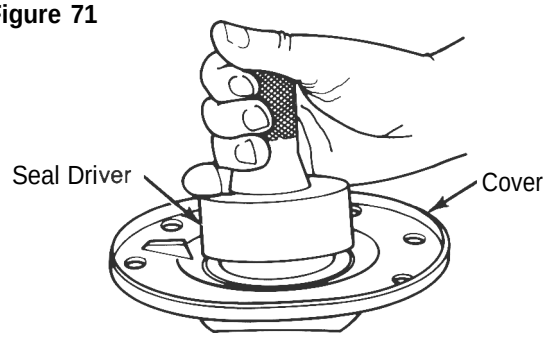

12. If the pinion seal mounts directly into the bearing cage, install a new triple-lip seal as follows.

A. The old triple-lip seal can be installed into the bearing cage if the seal is not worn or damaged. See page 12.

Figure 72

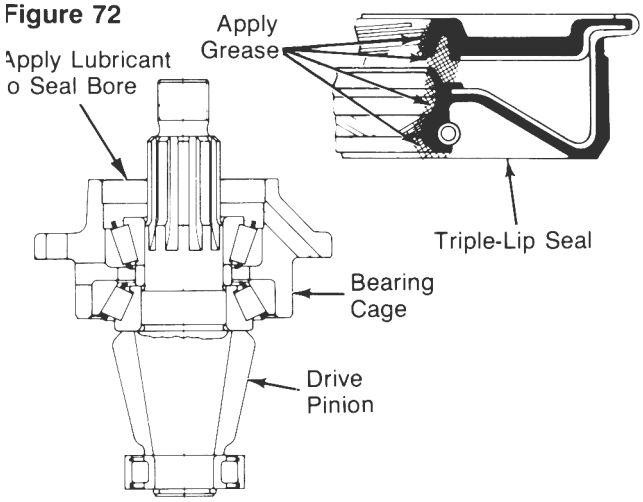

B. Apply the same lubricant used in the axle housing to the outer surface of the seal and the seal bore in the bearing cage. **Figure 72.**

CAUTION:

Make sure that the seal lips are clean and free from dirt and particles that will cause a leak between the yoke and the seal.

C. On reused seals, apply Lubriplate or wheel bearing grease to the seal lips.

D. Put the drive pinion and cage assembly in a press, seal bore toward the top.

E. Press the seal into bearing cage until flange of seal is flat against the top of bearing cage. Use a sleeve or seal driver of the correct size that fits against the metal flange of seal. The diameter of the sleeve or driver MUST be larger than the diameter of the flange. **Figure 73.**

Figure 73

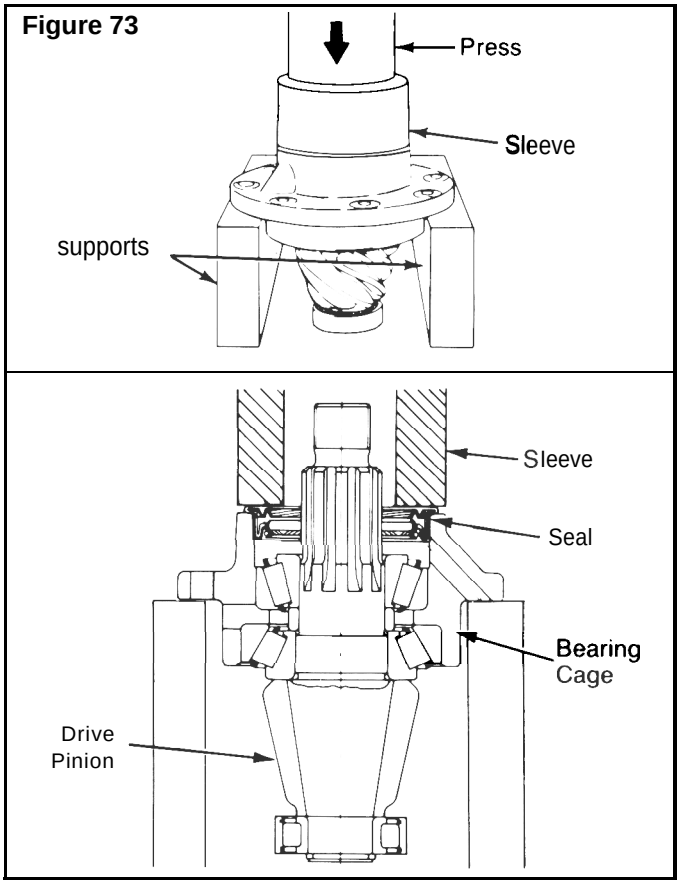

NOTE:

If a *press is not available, use a mallet and the sleeve or driver to install the seal.* Figure 74.

g 74

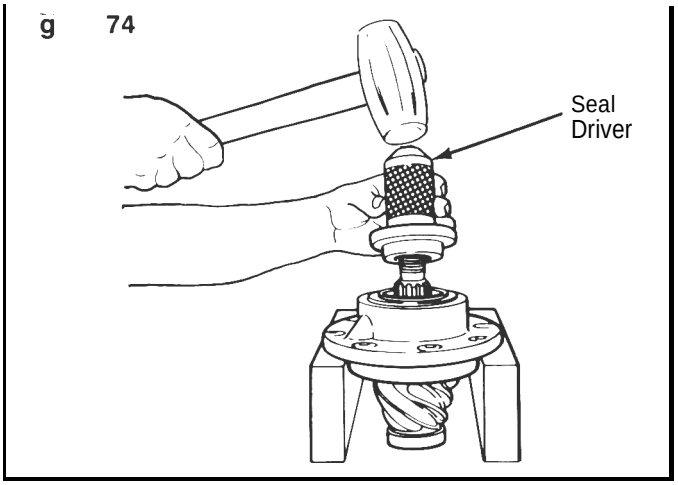

WARNING:

Wear safe eye protection. Do not hit steel parts or tools with a steel hammer. Parts or tools can break and cause injury.

F. After the triple-lip seal is installed, a gap of approximately .015 to .030 inch (.38 to .76 mm) between the flange and bearing cage is normal. **Figure 75.**

Figure 75

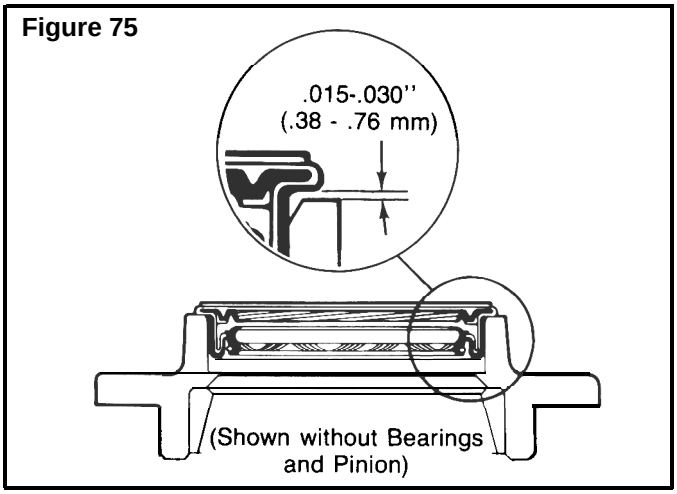

Check the gap with a feeler gauge at several points around the seal. The gap must be within .015 to .030 inch (.38 to .76 mm). The difference between the largest and smallest gap measurement MUST NOT exceed .010 inch.

Adjust Thickness of Shim Pack for the Pin. ion Cage (Depth of Pinion)

NOTE:

Use *this procedure if a new drive pinion and ring gear set is installed, or if the depth of the drive pin. ion has to be adjusted.* Figure 76.

Figure 76

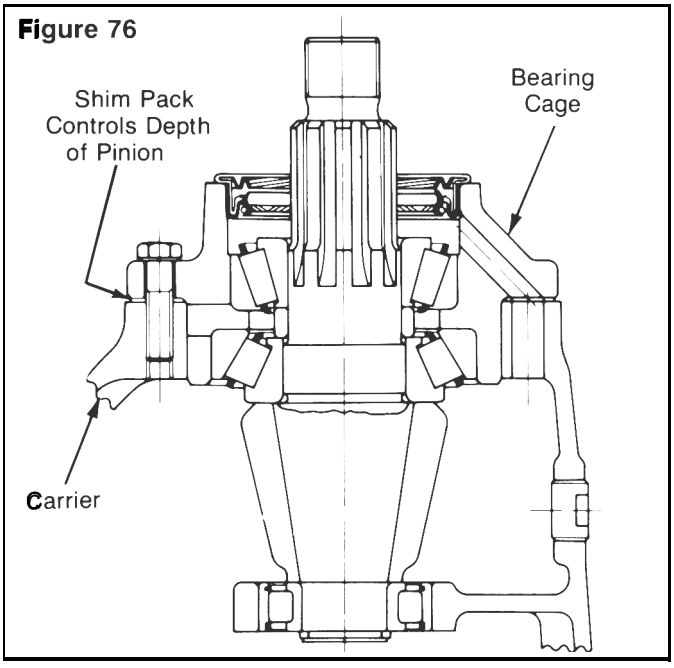

1. Measure the thickness of the old shim pack that was removed from under the pinion cage with a micrometer. Record the measurement for later use. **Figure 77.**

Figure 77

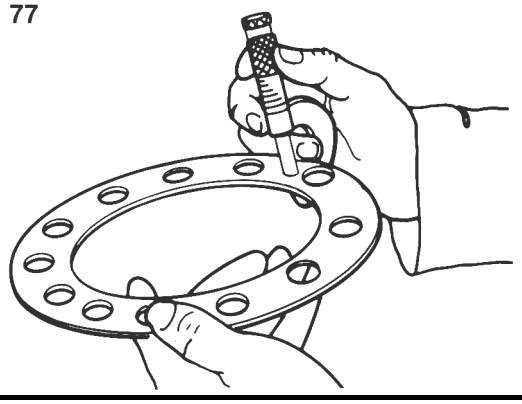

2. Look at the pinion cone ("PC") variation number on the old drive pinion that is "being replaced. See Gear Set Information, step 4 on page 25 for examples and location of the number. Record the number for later use. If ("PC") variation number cannot be located, assemble gear set with shim pack thickness found in step 1. **Figure 78.**

Figure 78

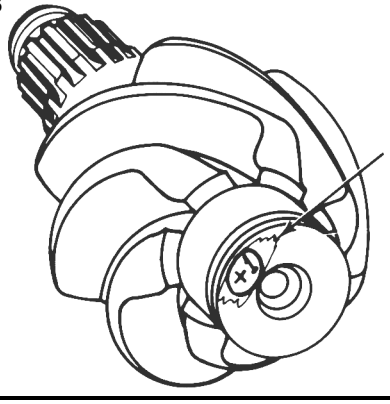

NOTE:

The pinion cone number can be either 1,000ths of an inch or 100ths of a millimeter. See the following examples.

PC+ *3, PC-3,* + *3* or -3 equal .003 inch.
PC+ .03, PC-.O3 mm, + *.03* mm or -.03 equal .03 m m

To change inches to millimeters, multiply inches by 25.40
To change millimeters to inches, multiply millimeters by 0.039

3. If the old pinion cone number is a plus (+), subtract the number from the old shim pack thickness that was measured in step 2.

4. If the old pinion cone number is a minus (-), add the number to the old shim pack thickness that was measured in step 2.

NOTE:

The value calculated in step 3 or 4 is the thickness of the standard shim pack, without a variation.

5. Look at the pinion cone ("PC") variation number on the new drive pinion that will be installed. Record the number for later use.

6. If the new pinion cone number is a plus (+), add the number to the standard shim pack thickness that was calculated in step 3 or 4.

7. If the new pinion cone number is a minus (-), subtract the number from the standard shim pack thickness that was calculated in step 3 or 4.

NOTE:

The value calculated in step 6 or 7 is the thickness of the new shim pack that will be installed. See the following examples, Chart 2.

Chart 2

Examples:	Inches	mm
1. Old Shim Pack Thickness	*.030*	.76
Old PC Number, PC+2(+.05 mm)-	.002 -	.05
Standard Shim Pack Thickness	.028	.71
New PC Number, PC+5(+.13 mm)+	.005 +	.13
New Shim Pack Thickness	.033	.84
2. Old Shim Pack Thickness	.030	.76
Old PC Number, PC-2 (-.05 mm)	+ .002 +	.05
Standard Shim Pack Thickness	.032	.81
New PC Number, PC+5(+.13 mm)+	.005 +	.13
New Shim Pack Thickness	.037	.94
3. Old Shim Pack Thickness	.030	.76
Old PC Number, PC+ 2(+.05 mm)-	.002 -	.05
Standard Shim Pack Thickness	.028	.71
New PC Number, PC-5 (-.13 mm) -	.005 -	.13
New Shim Pack Thickness	.023	.58
4. Old Shim Pack Thickness	.030	.76
Old PC Number, PC-2 (-.05 mm)	+ .002 +	.05
Standard Shim Pack Thickness	.032	.81
New PC Number, PC-5(-.13 mm) -	.005 -	.13
New Shim Pack Thickness	.027	.68

IMPORTANT Remember, that Rockwell drive pinions and ring gears MUST be replaced as matched sets.

8. Install the drive pinion, bearing cage and new shim pack into the carrier.

Install the Drive Pinion, Bearing Cage and Shim Pack into the Carrier

NOTE:

If a new drive pinion and ring gear set is installed, or if the depth of the drive pinion has to be adjusted, calculate the thickness of the shim pack. See the procedure to Adjust Thickness Of Shim Pack For The Pinion Cage on page 35.

1. Install the correct shim pack between the bearing cage and carrier. **Figure 79.**

2. Align the oil slots in the shims with oil slots in the bearing cage and carrier, The use of guide studs will help align the shims. **Figure 79.**

Figure 79

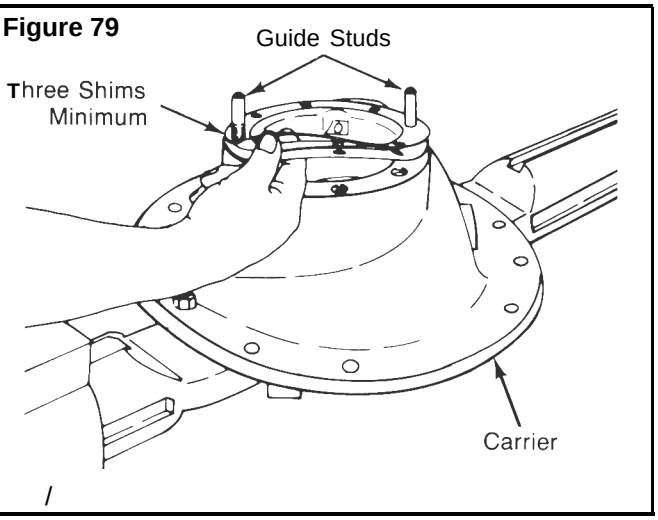

NOTE:

Use a *minimum of three shims in a pack. If the pack is made from different thickness shims, install the thinnest shims on both sides of the pack for maximum sealing.*

3. Install the drive pinion and bearing cage into the carrier. If necessary, use a rubber, plastic or leather mallet to hit the assembly into position. **Figure 80.**

Figure 80

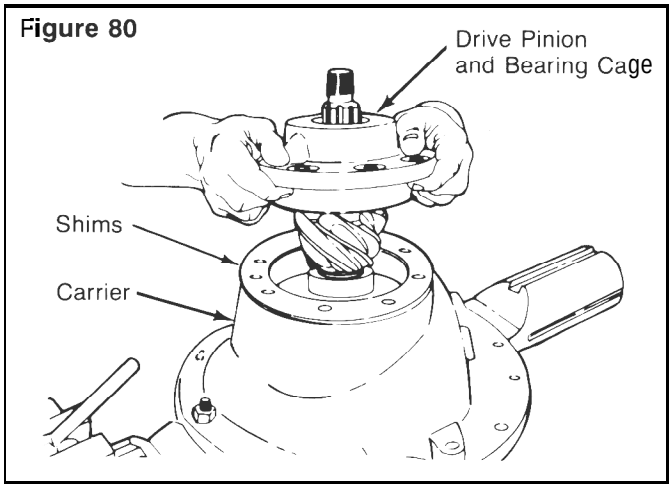

WARNING:

Wear safe eye protection. Do not hit steel parts with a steel hammer. Parts can break and cause injury.

4. If used, install the cover* and seal assembly and gasket* over the bearing cage. **Figure 81.**

Figure 81

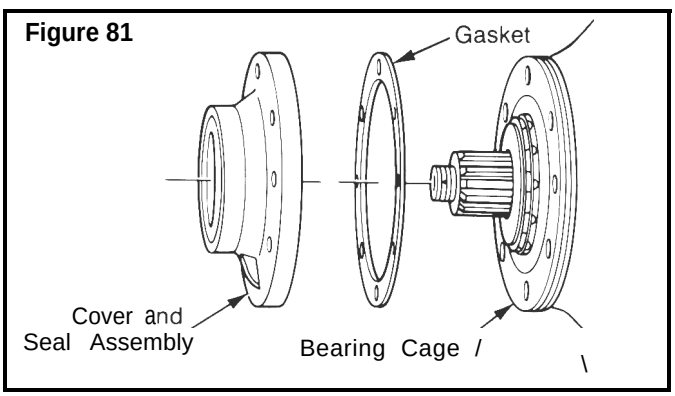

5. Align the oil slots in the cover* and gasket* with oil slot in the bearing cage.

● *Some Rockwell carriers do not have the parts described.*

6. Install the bearing cage to carrier capscrews and washers. Tighten capscrews to correct torque value. See the torque chart on page 65. **Figure 82.** T

Figure 82

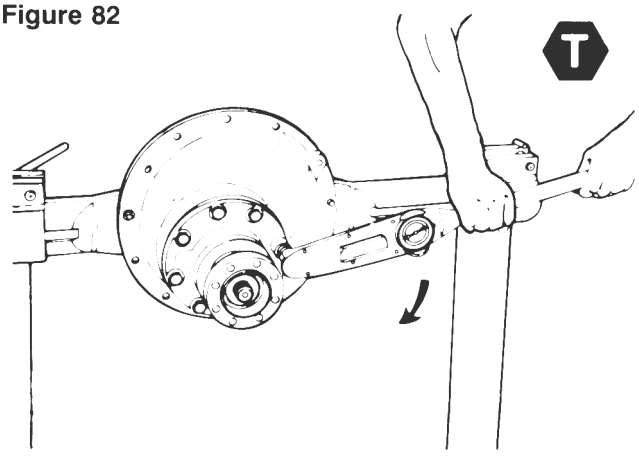

7. Install the input yoke or flange, nut and washer* on the drive pinion. The yoke or flange MUST be against the outer bearing.

NOTE:

If the fit between the yoke or flange splines and drive pinion splines is tight, use the three-piece pilot tool for installation. See the procedure on page 22.

CAUTION:

Do not install tight fit yokes or flanges on shafts using a hammer or mallet. A hammer or mallet will damage the yoke or flange.

8. Tighten the pinion nut to the correct torque value. See the torque chart on page 65. **Figure 83.** T

Figure 83

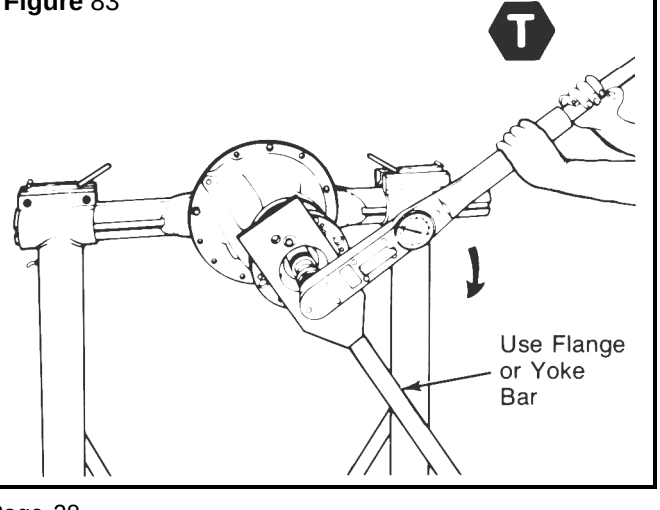

Assemble the Main Differential and Ring Gear Assembly

CAUTION:

Do not press a cold ring gear on the flange case half. A cold ring gear will damage the case half because of the tight fit. Metal particles between the pads will cause gear runout that exceeds the Rockwell specification of .008 inch (0.2 mm)

1. Expand the ring gear by heating the gear in a tank of water to a temperature of 160°F to 180° F (71“C to 82”C) for 10 to 15 minutes.

WARNING:

Wear safe clothing and gloves that will protect you from injury when you touch the hot ring gear.

2. Safely lift the ring gear from the tank of water using a lifting tool.

3. Install the ring gear on the flange case half immediately after the gear is heated. If the ring gear does not fit easily on the case half, heat the gear again. Repeat step 1.

4. Align fastener holes of the ring gear and flange case half. Rotate the ring gear as needed.

5. Install the bolts*, nuts* and washers* that hold the ring gear to the flange case half. Install the bolts from the gear side of the assembly. The bolt heads MUST be against the ring gear. **Figure 84.**

Figure 84

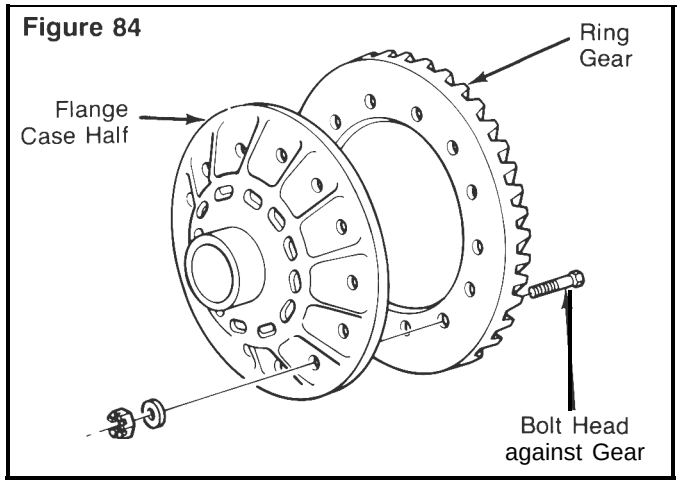

6. Tighten the bolts* and nuts* to the correct torque value. See the torque chart on page 65. T

7. If rivets* are used to hold the ring gear to the flange case half, install the rivets* as follows:

**Some Rockwell carriers do not have the parts described.*

CAUTION:

Do not heat rivets before installation. Use only cold rivets to fasten the ring gear correctly on the flange case half.

A. Install the correct size rivets* in pairs opposite each other from the case half side of the assembly. The rivet* heads MUST be against the flange case half. **Figure 85.**

Figure 85

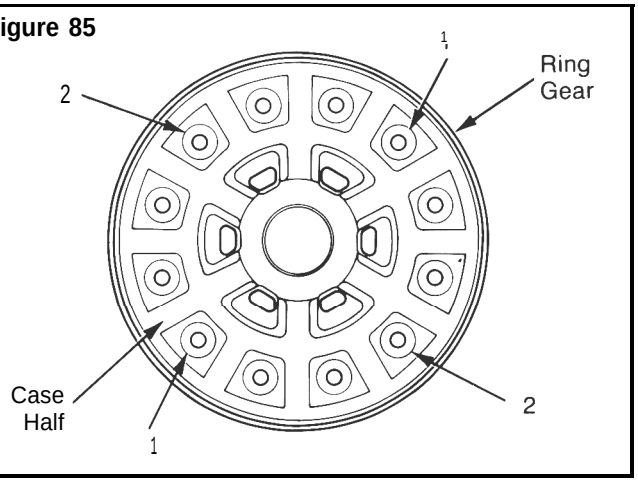

B. Press the rivets* into position from the ring gear side of the assembly. Use a riveter machine and apply the correct amount of pressure. See Chart 3 for rivet pressures.

Chart 3

Diameter of Rivet Body	Press Pressure Needed to Install Rivets	
inch (mm)	**pounds / tons**	**kilograms / metric tons**
.438 (11.13)	44,000 / 22	19958 / 20
.500 (12.70)	60,000 / 30	27216 / 27.2
.563 (14.30)	72,000 / 36	32659 / 32.7
.625 (15.88)	90,000 / 45	40824 / 40.8

CAUTION:

The pressure on rivets must be held for approximately one minute so that the rivet body will fill the hole.

C. After the rivets are installed, check for gaps between the back surface of the ring gear and the case flange. Use a .003 inch (.08 mm) feeler gauge and check at four points around the assembly. **Figure 86.**

If the gauge fits more than one half the distance between the outer diameter of the flange and the pilot diameter of the gear, remove the ring gear. See the procedure on page 9 and the following steps D and E. If the gap is less than .003 inch (.08 mm), continue by following step 8.

Figure 86

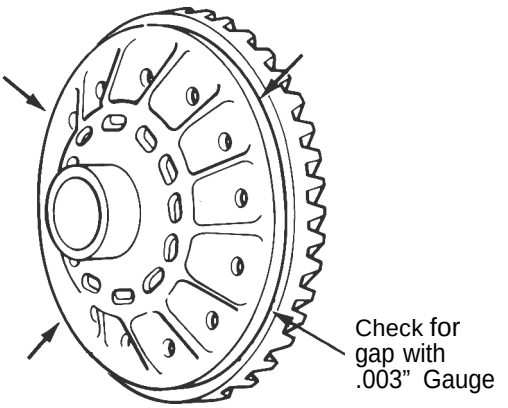

D. Check the flange case half and ring gear for the problem that causes the gap. Repair or replace parts.

E. After the parts are repaired or replaced, assemble the ring gear on the flange case half. Repeat the procedure on page 38, and steps A to C on this page.

8. Install the bearing cones on both of the case halves. Use a press and sleeve of the correct size. **Figure 87.**

Figure 87

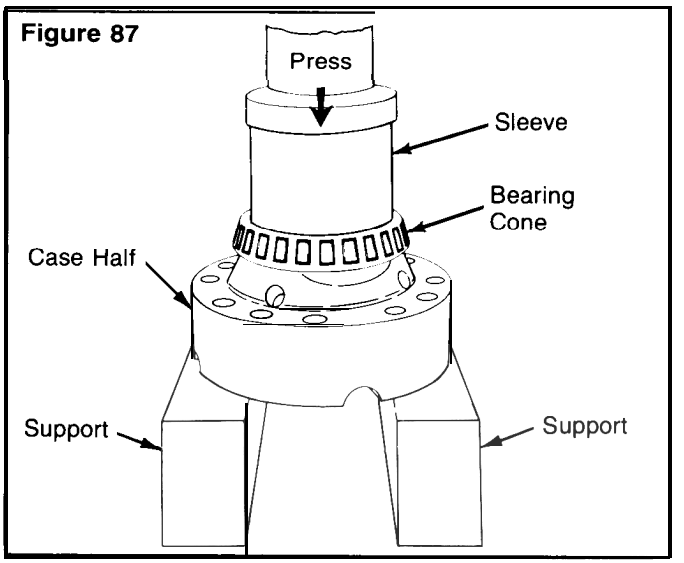

9. Apply axle lubricant on the inside surfaces of both case halves, spider (cross), thrust washers, side gears and differential pinions.

10. Put the flange case half on a bench, ring gear teeth toward top.

● *Some Rockwell carriers do not have the parts described.*

11. Install one thrust washer and side gear into the flange case half. **Figure 88.**

Figure 88

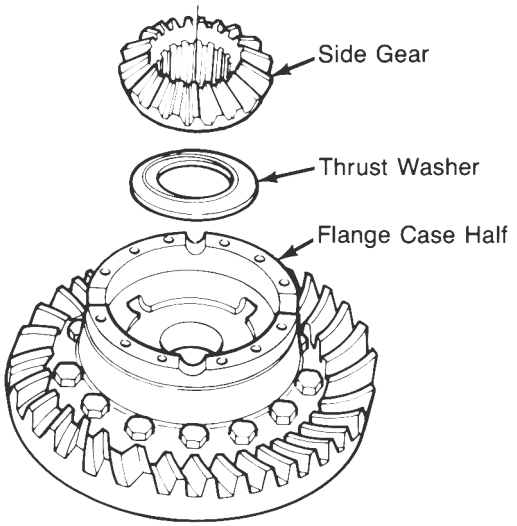

CAUTION:

The *side gears in some* carrier *models have hubs of different lengths. Install the correct length side gear into the flange case half.*

12. Install the spider (cross), differential pinions and thrust washers into the flange case half. **Figure 89.**

Figure 89

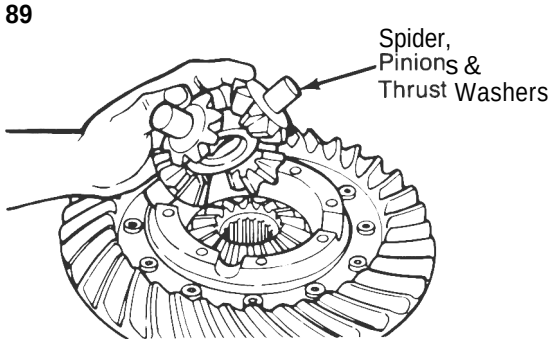

13. Install the second side gear and thrust washer over spider and differential pinions. **Figure 90.**

Figure 90

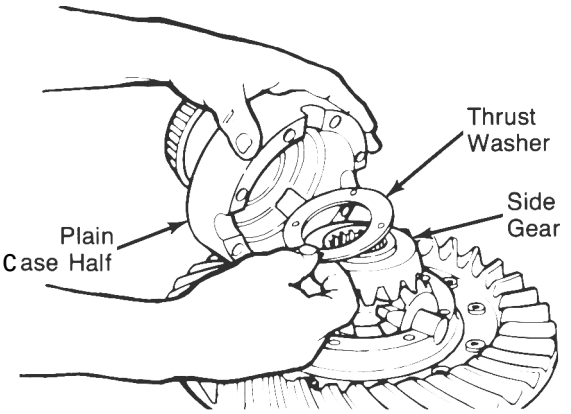

14. Put the plain half of the differential case over the flange half and gears. Rotate the plain half as needed to align the match marks. **Figure 90 and 91.**

Figure 91

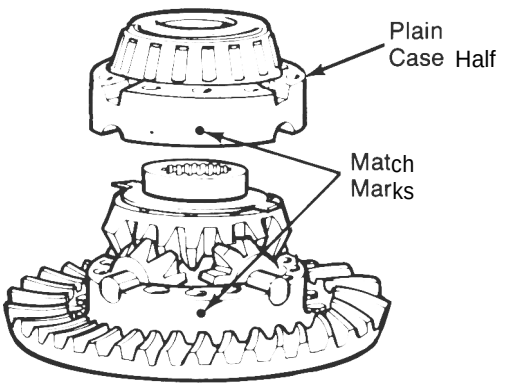

15. Install Dri-Loc fasteners into the case halves. See the procedures on page 20 and the following steps A and B.

A. Install four capscrews' and washers* or bolts*, nuts* and washers* into the case halves. The distance between the fasteners MUST be equal. Tighten the fastners to the correct torque value in a pattern opposite each other. **Figure 92** and see torque chart on page 65. T

**Some Rockwell carriers do not have the parts described.*

Figure 92

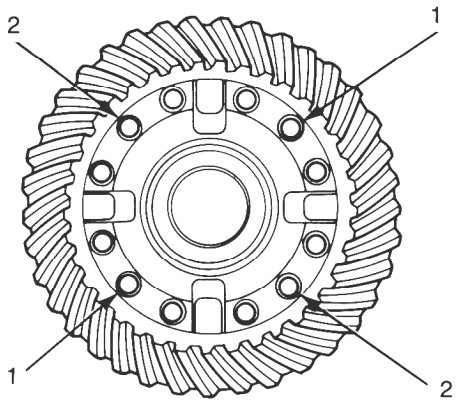

B. Install the other fasteners into the case halves. Tighten the fasteners to the correct torque value. See the torque chart on page 65. T

16. Check the rotating resistance of the differential gears. Use the following procedure.

Rotating Resistance Check of Differential Gears

Specification:
50 lb.-ft. (67.8 N.m) torque maximum applied to one side gear.

NOTE:

***Make a tool for checking the rotating resistance of the differential gears. The tool can be made from an axle shaft that matches the spline size of the differential side gear. See* Figure 93.**

Figure 93

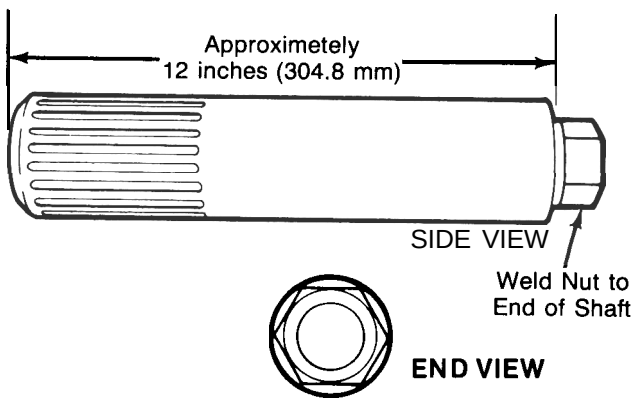

A. Install soft metal covers over vise jaws to protect the ring gear. **Figure 94.**

B. Put the differential and ring gear assembly in the vise.

C. Install the tool into the differential until the splines of the tool and one side gear are engaged. **Figure 94.**

Figure 94

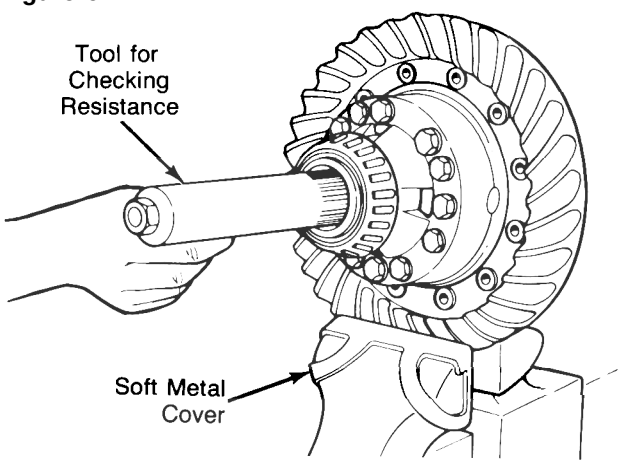

D. Attach a torque wrench to the nut of the tool and rotate the differential gears. As the differential gears rotate, read the value indicated on the torque wrench. **Figure 95.**

Figure 95

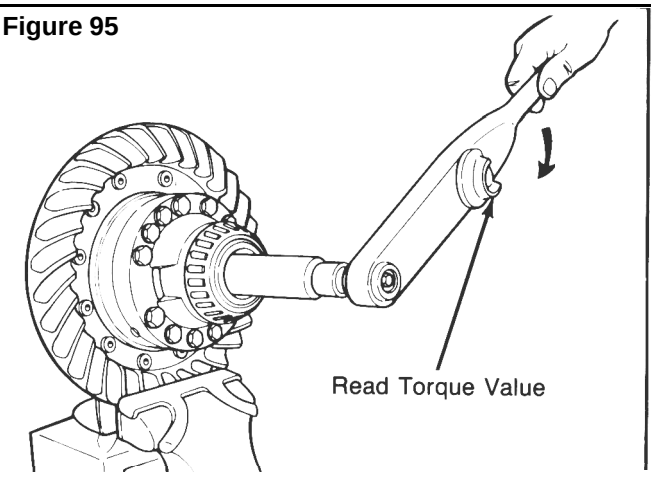

E. If the torque value exceeds the specification, disassemble the differential gears from the case halves.

F. Check the case halves, spider, gears and thrust washers for the problem that causes the torque value to exceed the specification. Repair or replace parts.

17. After the parts are repaired or replaced, assemble the parts and repeat steps A to F.

'Some Rockwell carriers do not have the parts described.

Install the Differential and Ring Gear Assembly

1. Clean and dry the bearing cups and bores of the carrier legs and bearing caps.

2. Apply axle lubricant on the inner diameter of the bearing cups and on both bearing cones that are assembled on the case halves.

3. Apply Rockwell Adhesive in the bearing bores of the carrier legs and bearing caps. See the procedure on page 21. **Figure 96.**

Figure 96

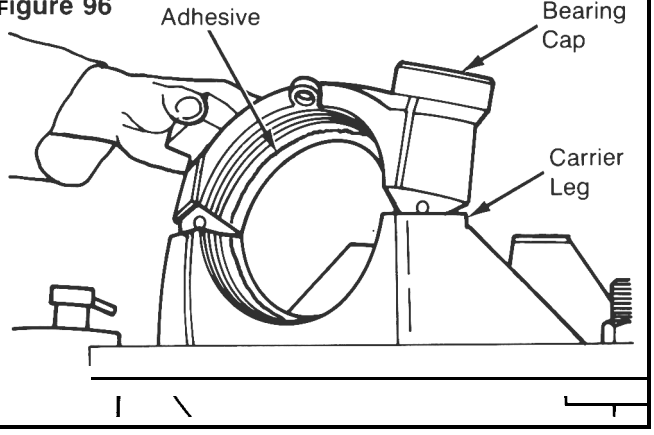

4. Install the bearing cups over the bearing cones that are assembled on the case halves. **Figure 97.**

Figure 97

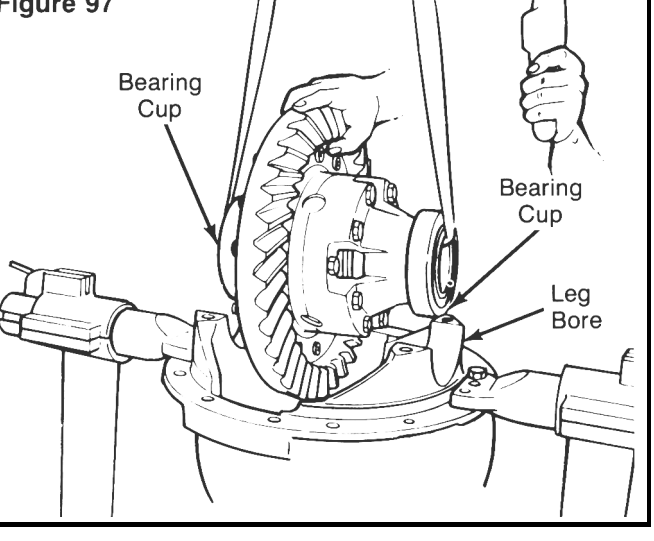

5. Safely lift the differential and ring gear assembly and install into the carrier. The bearing cups MUST be flat against the bores between the carrier legs. **Figure 97.**

6. Install both of the bearing adjusting rings into position between the carrier legs. Turn each adjusting ring hand tight against the bearing cup. **Figure 98.**

Figure 98

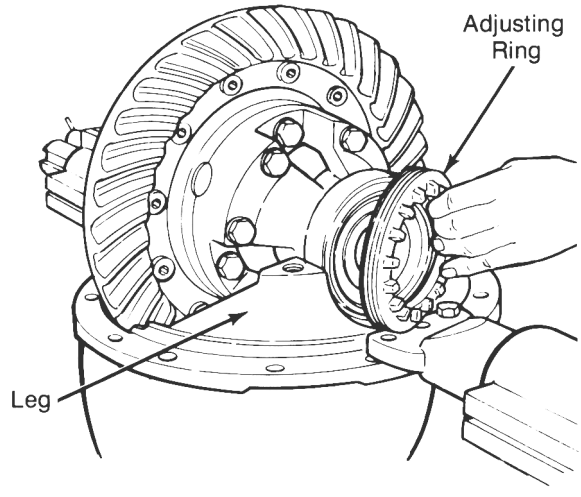

7. Install the bearing caps over the bearings and adjusting rings in the correct location as marked before removal. **Figure 99.**

Figure 99

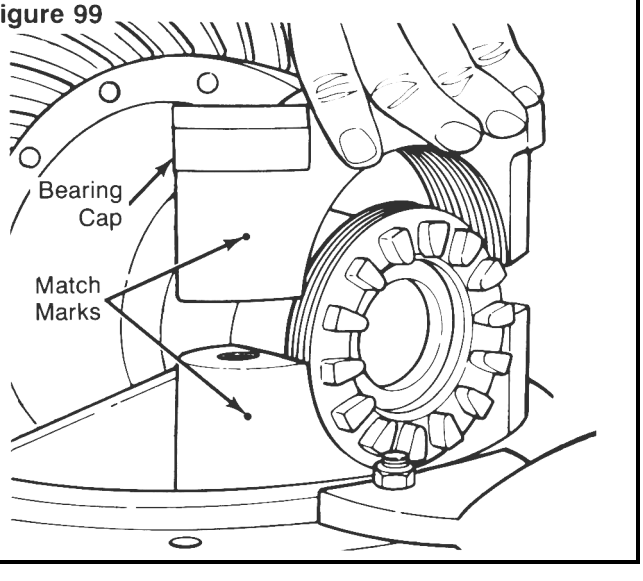

WARNING:

Wear safe eye protection. Do not hit steel parts with a steel hammer. Parts can break and cause injury.

8. Hit each bearing cap into position with a light leather, plastic or rubber mallet. The caps MUST fit easily against the bearings, adjusting rings and carrier. DO NOT FORCE THE BEARING CAPS INTO POSITION.

CAUTION:

If bearing caps are not installed in correct locations, the bores and threads in caps will not match the carrier. You will have problems assembling the caps on the carrier and damage to parts can occur. Do not force the bearing caps into position.

9. If bearing caps do not correctly fit into position, check the alignment of match marks between caps and carrier. Remove the caps and repeat steps 6 to 8.

10. Install the capscrews and washers that hold bearing caps to the carrier. Tighten the capscrews by hand four to six turns, then tighten the capscrews to the correct torque value. See the torque chart on page 65. T

NOTE:

Do not install the cotter keys* pins* or lock plates* that hold the bearing adjusting rings in position. Continue by adjusting the preload of differential bearings, adjust backlash of the hypoid gear and check tooth contact patterns.

Adjust Preload of Differential Bearings

Specifications:
Preload of differential bearings - all carrier models - 15 to 35 lb.-in. (1.7 to 3.9 N.m) torque.
or
Expansion between bearing caps -
RS-140 and RS-145 carrier models -.003 to .009 inch (.08 to ,22 mm)
All other carrier models -.006 to .013 inch (.15 to .33 mm)

**Some Rockwell carriers do not have the parts described,*

Method 1.

1. Attach a dial indicator on the mounting flange of the carrier.

2. Adjust the dial indicator so that the plunger or pointer is against the back surface of the ring gear. **Figure 100.**

Figure 100

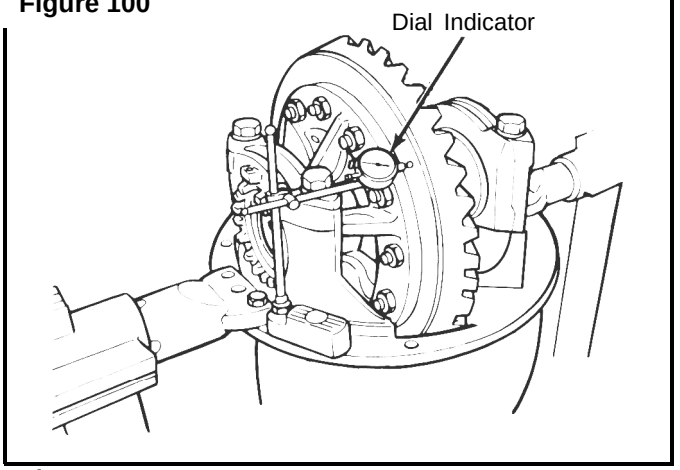

CAUTION:

When you turn the adjusting rings, always use a tool that engages two or more opposite notches in the ring. A "T" bar wrench can be used for this purpose. If the tool does not correctly fit into the notches, damage to the lugs will occur. **Figure 101.**

3. Loosen the bearing adjusting ring that is opposite the ring gear so that a small amount of end play shows on the dial indicator. **Figure 101.** Move the differential and ring gear to the left and right with pry bars while you read the dial indicator. Use the following step A or B.

Figure 101

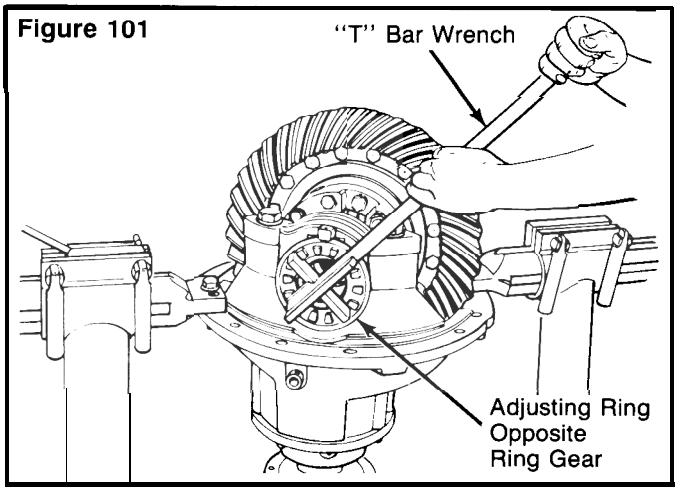

A. Use two pry bars that fit between the bearing adjusting rings and ends of the differential case. The pry-bar MUST NOT touch the differential bearings. **Figure 102.**

Figure 102

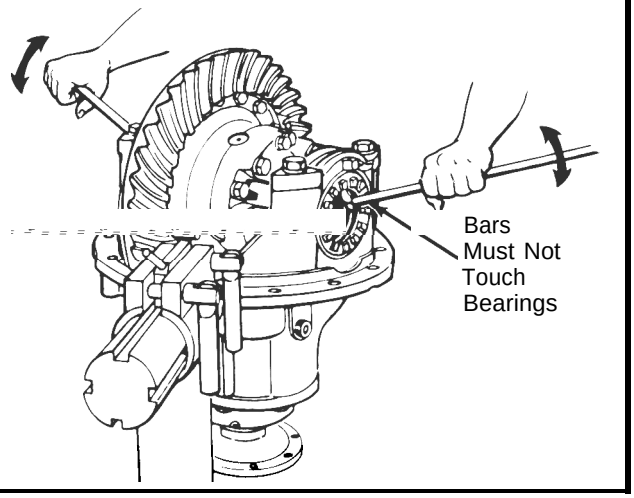

B. Use two pry bars between the differential case or ring gear and the carrier at locations other than described in step A. The prv bars MUST NOT touch the differential bearings. **Figure 103.**

Figure 103

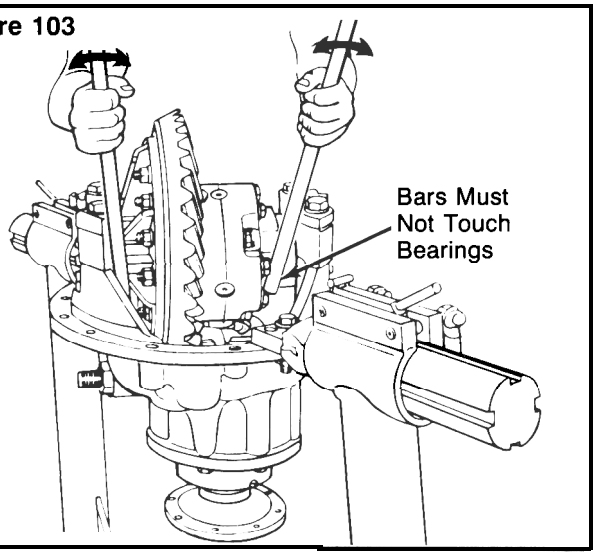

4. Tighten the same bearing adjusting ring so that no end play shows on the dial indicator. Move the differential and ring gear to the left and right as needed. Repeat step A or B.

5. Tighten each bearing adjusting ring one notch from the zero end play measured in step 4.

6. Continue by checking runout of the ring gear.

Method 2.

A second method of checking preload is to measure the expansion between the bearing caps after you tighten the adjusting rings. Use the following procedure.

1. Turn both adjusting rings hand tight against the differential bearings.

2. Measure the distance X or Y between opposite surfaces of the bearing caps. Use a large micrometer of the correct size. **Figures 104 and 105.** Make a note of the measurement.

Figure 104

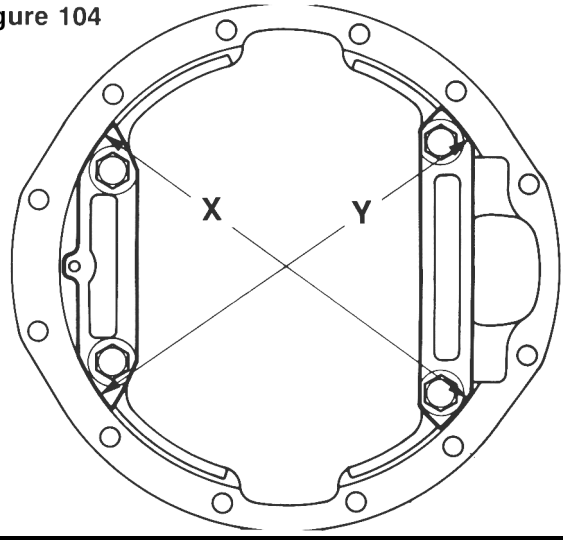

Figure 105

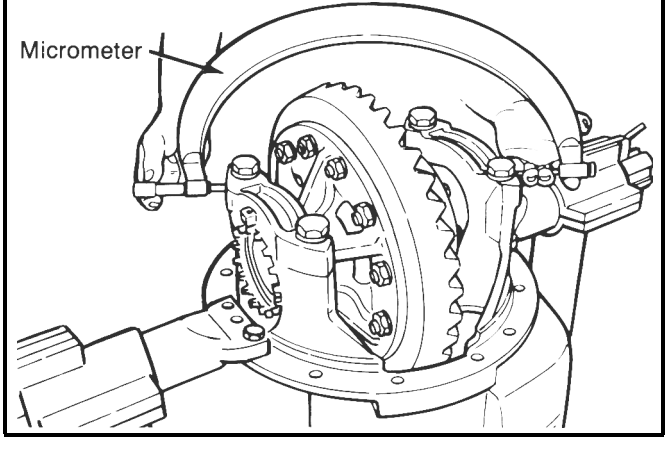

3. Tighten each bearing adjusting ring one notch.

4. Measure the distance X or Y again. Compare the dimension with the distance X or Y measured in step 2. The difference between the two dimensions is the amount the bearing caps have expanded.

Example: Measurements of a Q-100 carrier,

Distance X or Y before tightening adjusting rings = 15.315 inch (389.00 mm).
Distance X or Y after tightening adjusting rings = 15.324 inch (389.23 mm)

15.324 inch -15.315 inch = .009 inch (.23 mm) difference.

If the dimension is within specifications, continue by checking runout of the ring gear. If the dimension is less than specifications, repeat step 3 and 4 as needed.

If runout of the ring gear exceeds specifications, remove the differential and ring gear assembly from the carrier. See the procedure on page 5 and the following steps 5 and 6.

5. Check the differential parts including the carrier for the problem that causes the runout of gear to exceed specifications. Repair or replace parts.

6. After the parts are repaired or replaced, install the differential and ring gear into the carrier. See the procedure on page 42.

7. Repeat preload adjustment of differential bearings.

Check Runout of Ring Gear

Specification:
.008 inch (.20 mm)

1. Attach a dial indicator on the mounting flange of the carrier. **Figure 106.**

Figure 106

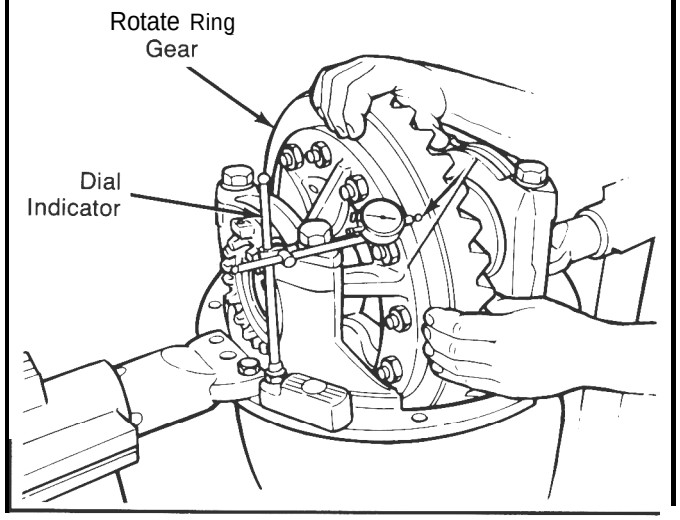

2. Adjust the dial indicator so that the plunger or pointer is against the back surface of the ring gear.

3. Adjust the dial of the indicator to zero (0).

4. Rotate the differential and ring gear while you read the dial indicator. The runout of the ring gear MUST NOT EXCEED .008 inch (.20 mm). **Figure 106.**

Adjust Backlash of the Ring Gear

Specifications:
Ring gears that have a pitch diameter of less than 17 inches (431.8 mm).
Range of backlash setting -.008 to .018 inch (.20 to .46 mm).
Backlash setting for new gear sets -.012 inch (.30 mm).

Ring gears that have a pitch diameter of 17 inches (431.8 mm) or greater than 17 inches.
Range of backlash setting -.010 to .020 inch (.25 to .51 mm)
Backlash setting for new gear sets -.015 inch (.38 mm)

Figure 107

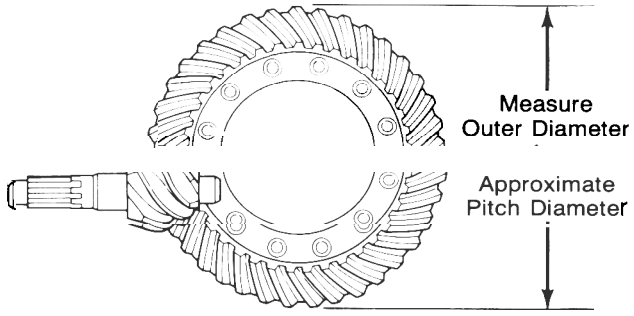

NOTE:

Measure the outer diameter of ring gear for approximate pitch diameter. **Figure 107.**

If the old gear set is installed, adjust the backlash to the setting that was measured before the carrier was disassembled.

If a new gear set is installed, adjust the backlash to the correct specification for new gear sets.

During the check of tooth contact patterns, the backlash can be adjusted within specification limits, if needed, to change the location of the pattern.

1. Attach a dial indicator on the mounting flange of the carrier. **Figure 108.**

Figure 108

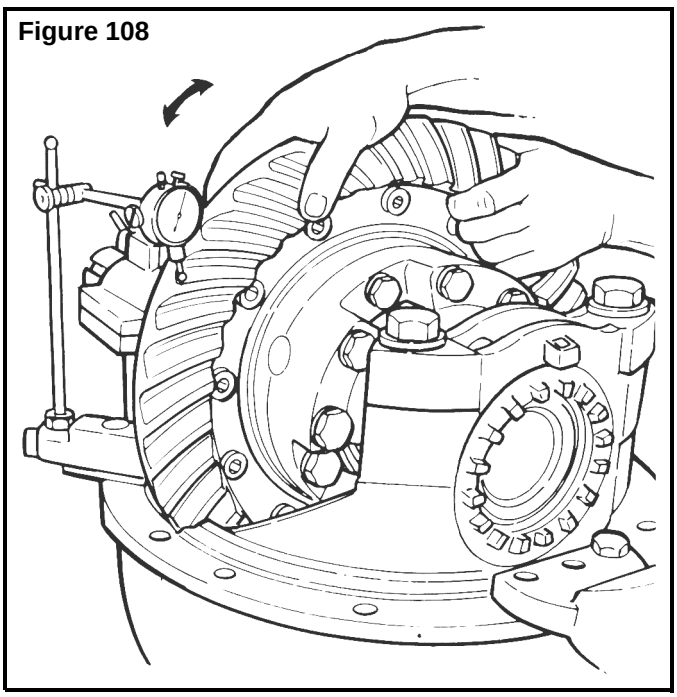

2. Adjust the dial indicator so that the plunger or pointer is against the tooth surface. **Figure 108.**

3. Adjust the dial of the indicator to zero (0).

4. Hold the drive pinion in position.

5. While you read the dial indicator, rotate the differential and ring gear a small amount in both directions, against teeth of the drive pinion. If the backlash reading is within specification, continue by checking tooth contact patterns. If the backlash reading is not within specifications, adjust backlash as needed. Continue by following steps 6 and 7.

NOTE:

***Backlash is increased by moving the ring gear away from the drive pinion.* Figure 109.**
***Backlash is decreased by moving the ring gear toward the drive pinion.* Figure 110.**

Figure 109

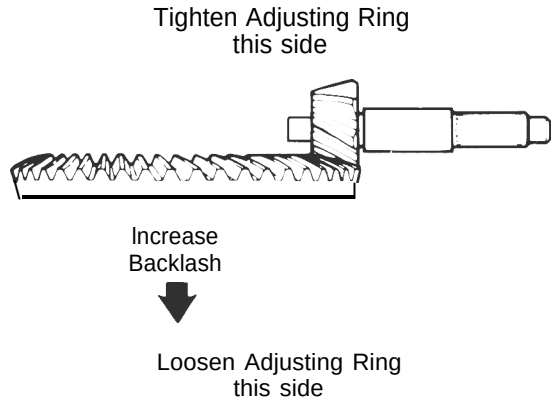

6. Loosen one bearing adjusting ring one notch then tighten the opposite ring the same amount. **See Figures 109 and 110.**

Figure 110

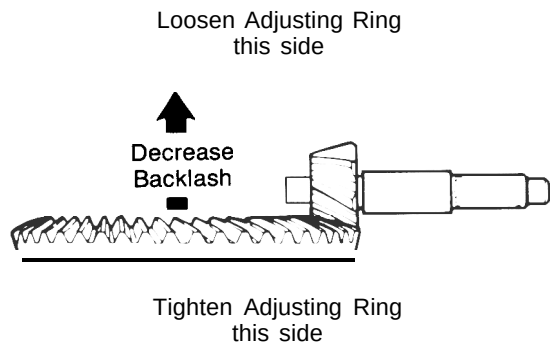

NOTE:

When *you* adjust backlash, *move the ring gear* ONLY *DO NOT move the drive pinion.*

7. Repeat steps 2 to 6 until the backlash is within specifications.

Check Tooth Contact Patterns of the Gear Set

General Information

Rockwell carriers can have a conventional hypoid gear set or a GENEROID hypoid gear set. The tooth contact patterns for each type of gear set are different. Look at the part numbers to see what type of gear set is in the carrier. See **Figure 111** for the location of part numbers.

Figure 111

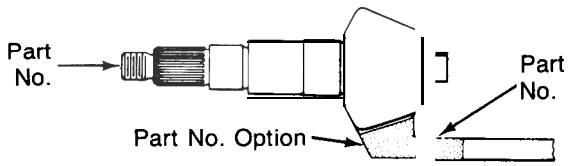

Examples of part numbers for conventional gear sets,
36786 for the ring gear.
36787 for the drive pinion.

Examples of part numbers for GENEROID gear sets.
36786-K or 36786-K2 for the ring gear.
36787-K or 36787-K2 for the drive pinion.

In the following procedures, movement of the contact pattern in the length of the tooth is indicated as, toward the “heel’ or “toe” of the ring gear. **Figure 112.**

Figure 112

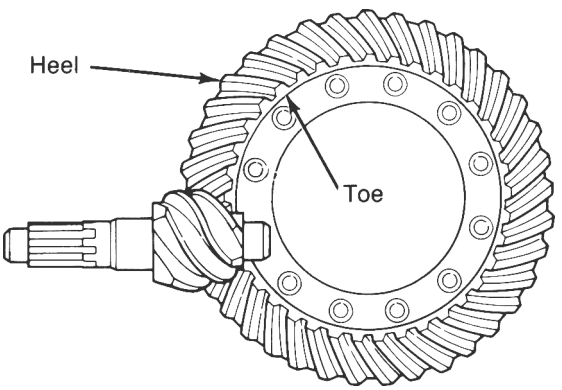

Always check tooth contact patterns on the drive side of the gear teeth. **Figure 113.**

Figure 113

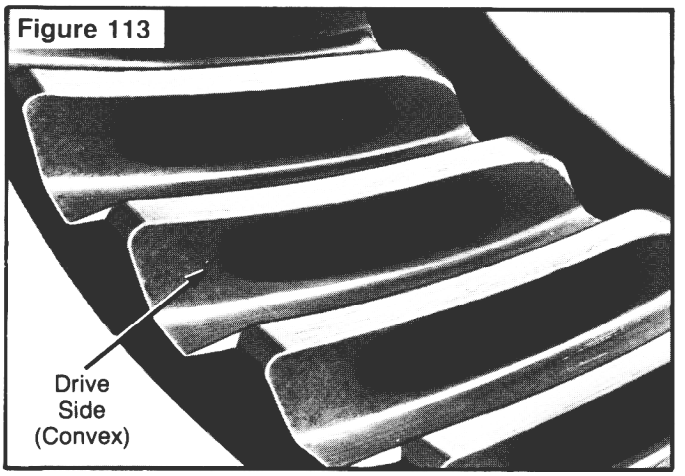

Tooth Contact Patterns of Conventional Hypoid and Generoid Hypoid Gear Sets

1. Adjust the backlash of a new gear set to either .012 inch (.30 mm) or .015 inch (.38 mm) depending on the size of the ring gear. Adjust the backlash of an old gear set to the setting that was measured before the carrier was disassembled. See the procedure on page 45.
2. Apply a marking compound to approximately 12 gear teeth of the ring gear. Rotate the ring gear so that the 12 gear teeth are next to the drive pinion. **Figure 114.**

Figure 114

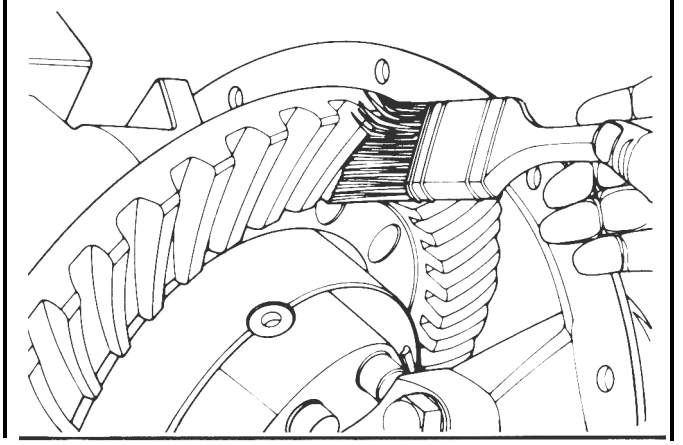

3. Rotate ring gear forward and backward so that the 12 gear teeth go past the drive pinion six times to get the contact patterns. Repeat if needed to get a more clear pattern.

Conventional Gears

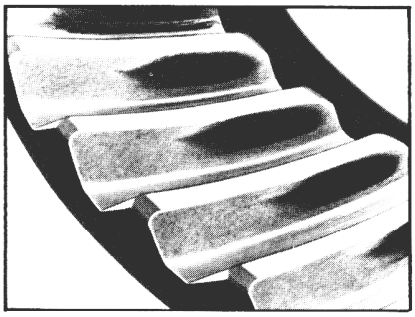

Figure 115A
Good Hand Rolled Pattern

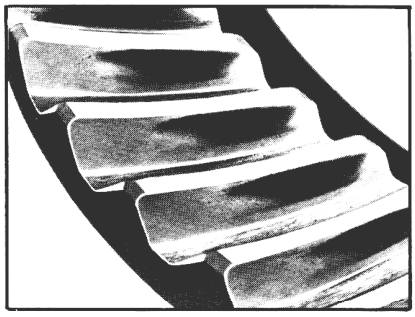

Figure 116A
High Pattern

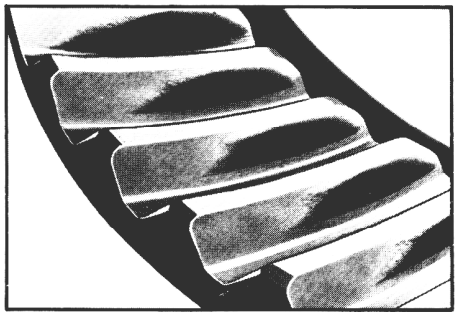

Figure 117A
Low Pattern

Generoid Gears

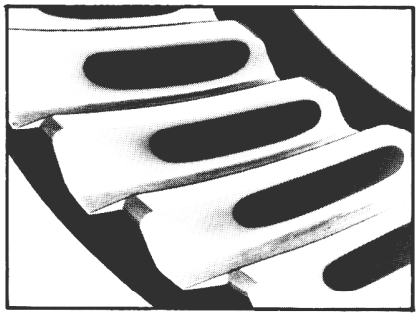

Figure 115B
Good Hand Roller Pattern

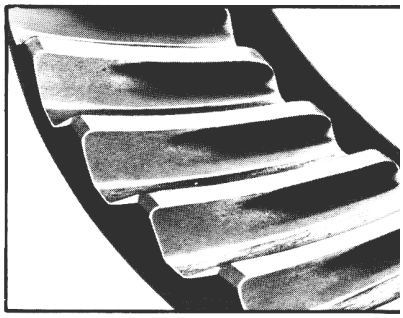

Figure 116B
High Pattern

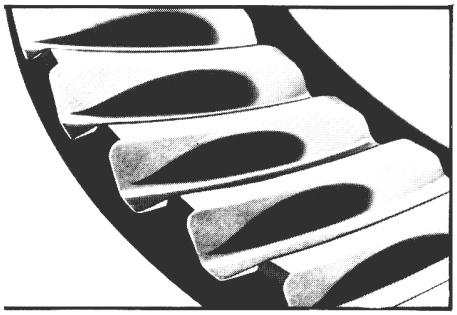

Figure 117B
Low Pattern

4. Look at the contact patterns on the ring gear teeth. Compare the patterns to Figures115A or B, 116Aor B and 117Aor B.

The Location of Good Hand Rolled Contact Patterns.

New Conventional and Generoid Gear Sets - toward the toe of the gear tooth and in the center between the top and bottom of the tooth. See **Figures 115A and 115B.**

When the carrier is being operated, a good pattern will extend approximately the full length of the gear tooth. The top of the pattern will be near the top of the gear tooth. **See Figure 118A or B.**

The location of a good hand rolled contact pattern for an old gear set MUST match the wear pattern in the ring gear. The contact pattern will be smaller in area than the wear pattern

If the contact patterns require adjustment, continue by following step 5 to move the contact patterns between the top and bottom of the gear teeth. If the contact patterns are in the center of the gear teeth, continue by following step 6

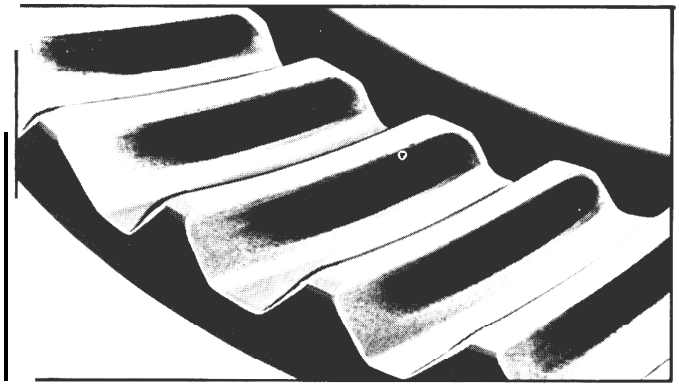

Figure 118A
Good Pattern in Operation
Conventional Gears

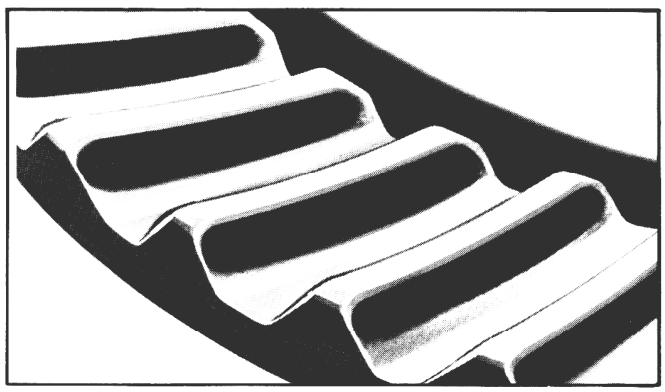

Figure 118B
Good Pattern in Operation
Generoid Gears

5. Change the thickness of the shim pack under bearing cage to move the contact patterns between the top and bottom of the gear teeth. Use the following procedure.

NOTE:

A high contact pattern indicates that the drive pin. ion was not installed deep enough into the carrier. A low contact pattern indicates that the drive pin. ion was installed* too deep *in the carrier.

A. Remove the drive pinion and bearing cage from the carrier. See the procedure on page 10.

B. To correct a high contact pattern, **Figure116A or B** decrease the thickness of the shim pack under the bearing cage. When you decrease the thickness of the shim pack, the drive pinion will move toward the ring gear. **Figure 119.**

To correct a low contact pattern, **Figure 117A or B** increase the thickness of shim pack under the bearing cage. When you increase' the thickness of the shim pack, the drive pinion will move away from the ring gear. **Figure 120.**

Figure 119

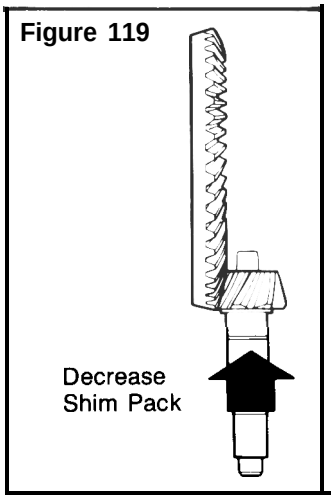

Figure 120

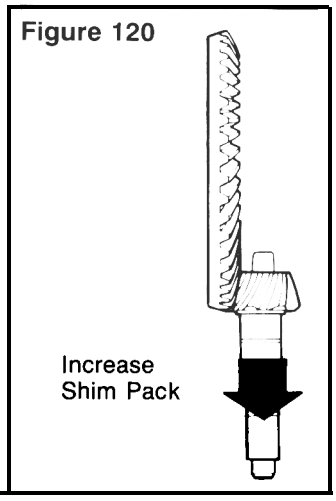

C. Install the drive pinion, bearing cage and shims into the carrier. See the procedure on page 35.

D. Repeat steps 2 to 5 until the contact patterns are in the center between the top and bottom of the gear teeth.

6. Adjust backlash of the ring gear within specification range to move the contact patterns to the correct location in the length of the gear teeth. See the procedure on page 45.

A. Decrease backlash to move the contact patterns toward the toe of the ring gear teeth. **Figure 121.**

Figure 121

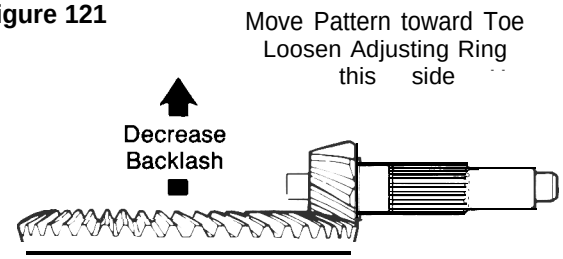

B. Increase backlash to move the contact patterns toward the heel of the ring gear teeth. **Figure 122.**

Figure 122

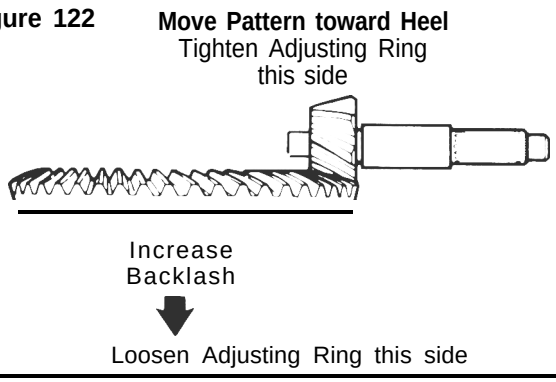

C. Repeat steps 2 to 4 and 6 until the contact patterns are at the correct location in the length of the gear teeth.

7. Install cotter keys*, pins*, or lock plates* that hold the two bearing adjusting rings in position. Use the following procedures.

⚠ *CAUTION:*

If your carrier was built using cotter keys, lock the adjusting rings oniy with cotter keys. if your carrier was built using roll pins, reuse the roll pins or lock the adjusting rings with cotter keys. Do not force a roll pin into a cotter key hole.

A. Cotter keys* - Install cotter keys between lugs of the adjusting ring and through the boss of the bearing cap. Bend the two ends of the cotter key around the boss. **Figure 123.**

B. Pins* - Install pin through boss of the bearing cap until the pin is between lugs of the adjusting ring. Use a drift and hammer to install the pin. **Figure 123.**

'Some Rockwell carriers do not have the parts described.

C. Lock Plates* - Install lock plate on bearing cap so that the tab is between lugs of the adjusting ring. Install the two capscrews that hold the lock plate to the bearing cap. Tighten the capscrews to correct torque value. See the torque chart on page 65. **Figure 123.** T

Figure 123

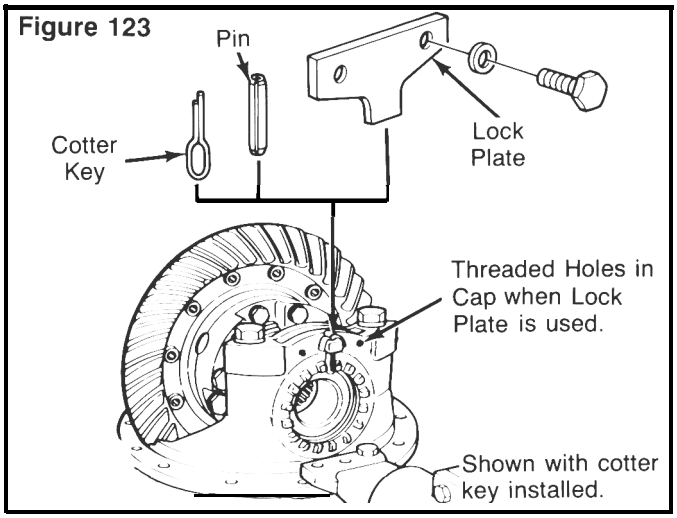

Install and Adjust the Thrust Screw*

Specification:
Clearance between thrust screw or block and ring gear -.025 to .045 inch (.65 to 1.14 mm). Loosen the thrust screw 1/2 turn, 180°.

If the carrier does not have a thrust block*, start at step 4.

1. Rotate the carrier in the repair stand until the back surface of ring gear is toward the top.

Figure 124

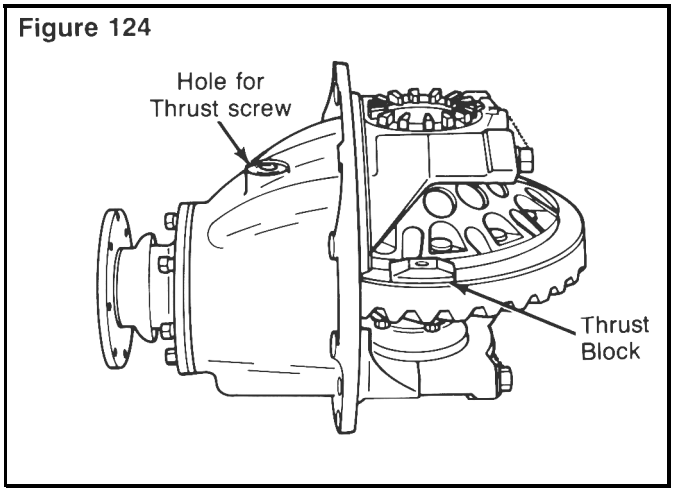

2. Put the thrust block'on the back surface of the ring gear. The thrust block* MUST be in the center between the outer diameter of gear and differential case.

3. Rotate the ring gear until the thrust block* and hole for thrust screw, in carrier, are aligned. **Figure 124.**

4. Install the jam nut* on the thrust screw*, one half the distance between both ends. **Figure 125.**

Figure 125

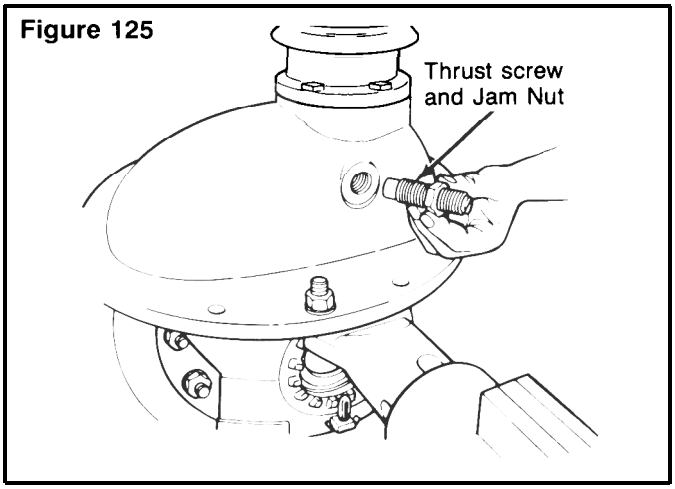

5. Install the thrust screw* into the carrier until the screw stops against the ring gear or thrust block*. **Figure 125.**

6. Loosen the thrust screw* 1/2 turn, 1800. **Figure 126.**

Figure 126

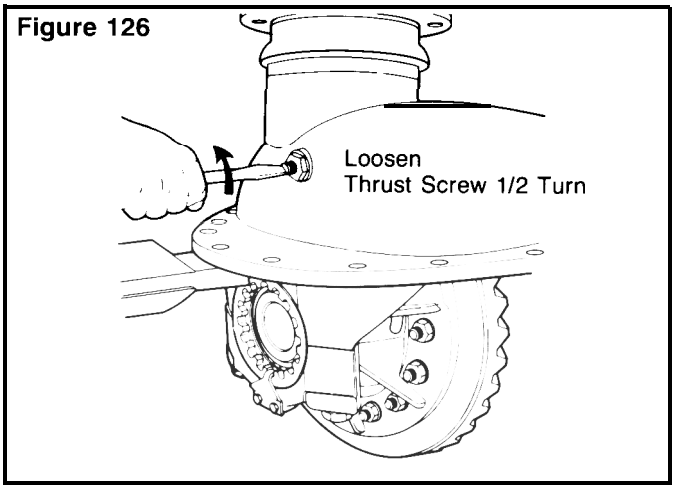

● *Some Rockwell carriers do not have the parts descrbed.*

7. Tighten the jam nut* to the correct torque value against the carrier. See the torque chart on page 65. **Figure 127.** T

Figure 127

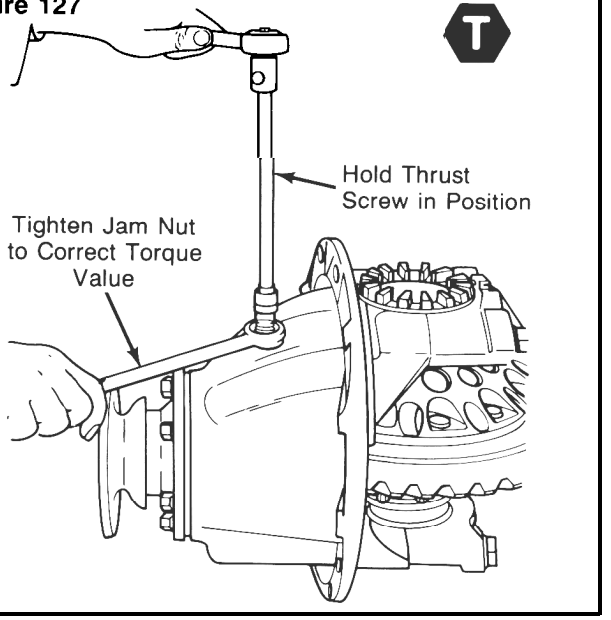

IMPORTANT: To complete the assembly of axles equipped with driver controlled main differential locks, see pages 57 through 61. Start with "Install Differential Shift Assembly" page 57.

Install Differential Carrier into Axle Housing

WARNING:

Be careful when using cleaning solvents. Follow the solvent manufacturer's instructions for safe use to prevent injury.

1. Clean the inside of axle housing and the mounting surface where the carrier fastens. Use a cleaning solvent and rags to remove dirt. Blow dry the cleaned areas with air. Also see the procedure on page 15.

2. Inspect the axle housing for damage. Repair or replace the axle housing. See the procedure on pages 17 to 19.

3. Check for loose studs* in the mounting surface of the housing where the carrier fastens. Remove and clean the studs* that are loose.

4. Apply liquid adhesive to the threaded holes and install the studs* into axle housing. See the procedure on page 20. Tighten studs* to correct torque value. See the torque chart on page 65. T

5. Apply silicone gasket material to the mounting surface of the housing where the carrier fastens. See the procedure on page 21. **Figure 128.**

Figure 128

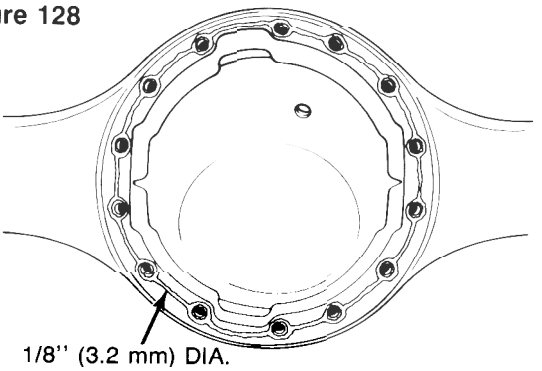

6. Install the carrier into the axle housing. Use a hydraulic roller jack or a lifting tool.

CAUTION:

Do not install the carriers using a hammer or mallet. A hammer or mallet will damage the mounting flange of carrier and cause oil leaks.

7. Install nuts* and washers or capscrews and washers in the four corner locations around the carrier and axle housing. Tighten the fasteners hand tight at this time. **Figure 129.**

Figure 129

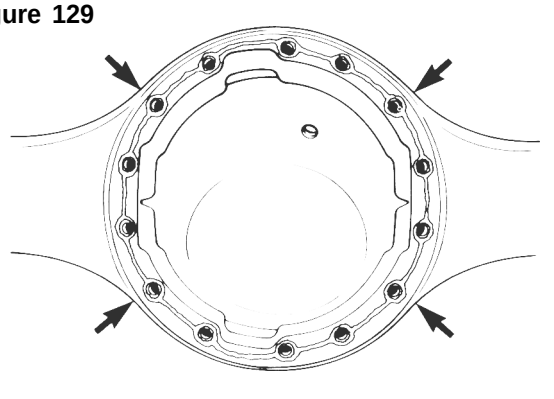

'Some Rockwell carriers do not have the parts described.

8. Carefully push the carrier into position, Tighten the four fasteners two or three turns each in a pattern opposite each other. See **Figure 129.**

9. Repeat step 8 until the four fasteners are tightened to the correct torque value. See the torque chart on page 65. T

10. Install the other fasteners and washers that hold the carrier in the axle housing. Tighten fasteners to the correct torque value. See the torque chart on page 65. T

11. Connect the driveline universal joint to the pinion input yoke or flange on the carrier.

12. Install the gaskets and axle shafts into the axle housing and carrier. The gasket and flange of the axle shafts MUST fit flat against the wheel hub. **Figure 130.**

13. Install the capscrews and washers that hold the axle shaft to the wheel hub. Tighten capscrews to the correct torque value. See the torque chart on page 65. T

14. If the wheel hubs have studs*, install the tapered dowels* at each stud and into the flange of the axle shaft. Use a punch or drift and hammer if needed.

Figure 130

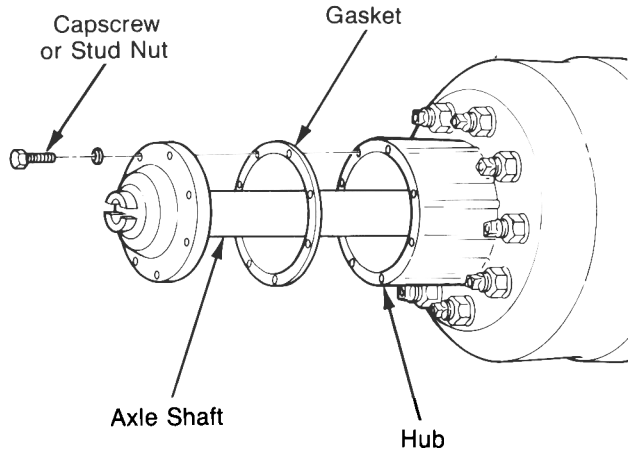

15. Install the nuts* and washers on the studs*. Tighten nuts* to the correct torque value. See the torque chart on page 65. T

'Some Rockwell carriers do not have the parts described.

Driver Controlled **Main Diff. Lock**

section 6

Driver Controlled Main Differential Lock

Figure 131

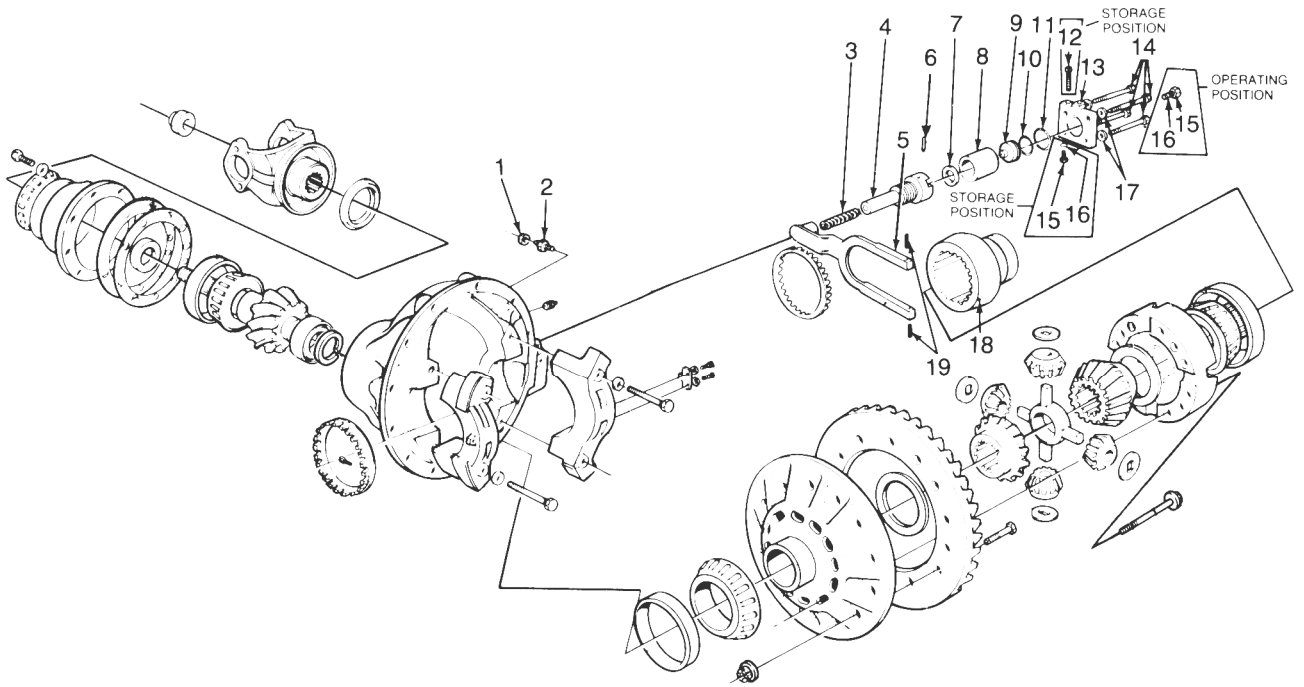

1. Lock Nut - Sensor Switch
2. Sensor Switch
3. Shift Shaft Spring
4. Shift Shaft
5. Shift Fork
6. Spring Retaining Pin
7. Flat Washer (or silastic as reqd.)
8. Air Cylinder Tube
9. Piston
10. Piston “O” Ring
11. Cover Copper Gasket
12. Capscrew - Manual Actuation
13. Cylinder Cover
14. Cover Capscrews
15. Cover Plug
16. Plug Gasket
17. Washers
18. Shift Collar
19. Shift Fork Roll Pins

Some Rockwell drive axle models have a driver controlled main differential lock. This differential lock is operated by a carrier mounted, air actuated shift unit. When activated, the shift unit moves a sliding collar which is installed on the splines of the axle shaft. When engaged, the collar locks the axle shaft to a second set of splines on the differential case. **Figure *131.***

NOTE:

The Rockwell carrier models with driver controlled differential lock equipment are manufactured in metric dimensions and sizes. When these carriers are serviced, it is important to use the correct metric size tools on the fasteners. See the metric torque charf at the back of this manual.

1. Remove the axle shafts before the vehicle is towed. See the procedures on pages 25 and 26.

⚠ CAUTION:

If the vehicle must be towed to a service facility with the drive axle wheels on the ground, it is necessary to* remove the ax*l*e shafts before the *vehicle is towed.

2. Install the axle shafts after the vehicle is towed. See the procedure on page 26.

3. If the differential carrier must be removed from the axle housing, use the following procedures.

Remove Differential Carrier From Axle Housing

Before the differential carrier can be removed or installed, the differential lock MUST be shifted into and held in the locked (engaged) position. The locked position gives enough clearance between the shift collar and the axle housing to permit the removal or installation of the carrier.

NOTE:

If the axle shafts were removed for towing with the differential in the unlocked (disengaged) position, install the right-hand axle shaft into the housing before continuing. Follow steps 1 and 2 of "install Axle Shafts After the Vehicle is Towed" on page 26.

To shift into the locked position, use either of the following "Air Pressure" or the "Manual Engaging" methods.

Air Pressure Method:

1. Remove the drain plug from the bottom of the housing and drain the lubricant.

2. Raise the right hand wheel of the drive axle off the floor with a hoist or jack.

⚠ WARNING:

Do not start the vehicle engine and engage the transmission with one wheel raised from the floor. When the differential is in locked (engaged) position, power will go to the wheel on the floor and cause the vehicle to move.

3. Put a jack stand under the right-hand spring seat to hold the vehicle in the raised position.

⚠ WARNING:

Do not work under a vehicle supported only by jacks. Jacks can slip or tip over and cause injury,

4. Disconnect the driveline from the pinion input yoke.

5. Disconnect the vehicle air line from the differential lock actuator assembly.

6. Connect an auxiliary air supply to the differential lock actuator assembly.

NOTE:

If an auxiliary air supply is not available, continue to "Manual Engaging Method" of locking the differential.

7. Apply and hold air pressure to the actuator assembly. The air pressure will move the shift collar to engage with the splines on the differential case half and lock the assembly.

8. Make sure that the shift collar has moved the full distance on the splines of the differential case half. Rotate the drive pinion or the right-hand wheel until the right-hand wheel makes one complete rotation (forward or backward).

Continue to hold the main differential in the locked position with air pressure until the carrier assembly is completely removed from the axle housing.

9. Remove the axle shafts from the housing. Follow Steps 1-3 of "Remove Axle Shafts Before The Vehicle is Towed" on page 26.

10. Remove the carrier from the housing as described in Steps 8 through 15 on page 5.

11. After the carrier is removed from the axle housing, release the air pressure from the actuator assembly.

Manual Engaging Method:

If an auxiliary air supply is not available or if the differential carrier is to be stored for later use, use this manual engaging method, **Figure 132.**

1. Follow Steps 1 through 5 of the "Air Pressure Method".

Figure 132

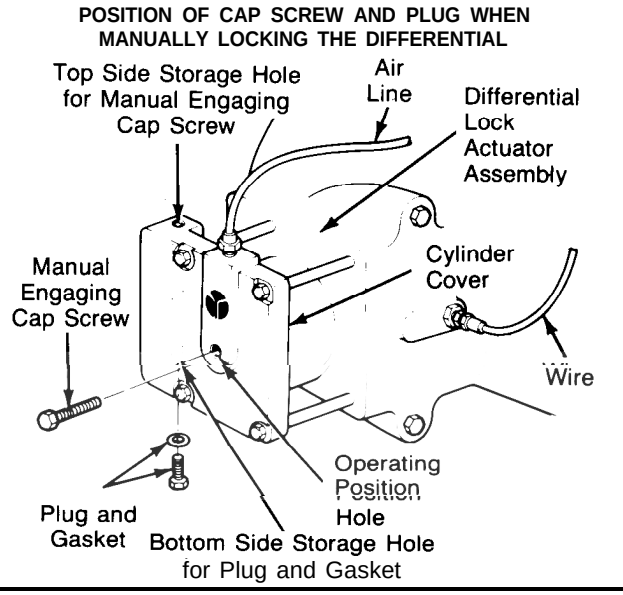

2. Remove the plug and gasket from the hole in the center of the cylinder cover.

3. Remove the manual engaging cap screw from the top storage hole in the cylinder cover.

4. Install the plug and gasket into the bottom storage hole in the cylinder cover.

NOTE:

The storage hole for the plug and gasket is the opposite end of the storage hole for the manual engaging cap screw.

5. Install the manual engaging capscrew into the threaded hole in the center of the cylinder cover.

6. Turn the manual adjusting capscrew to the right until the head is approximately 1/4 inch from the cylinder cover. DO NOT turn the capscrew beyond its normal stop. The capscrew is now in the service position and the main differential lock is completely engaged.

⚠ *CAUTION:*

There will be a small amount of spring resistance felt when you turn in the manual engaging capscrew. If a high resistance is felt before reaching the locked (engaged) position, STOP TURNING THE CA PSCREW, or the cover and capscrew threads will be damaged.

A high resistance on the capscrew indicates that the splines of the shift collar and the differential case half are not aligned or engaged. To align the splines use the following procedure:

A. Rotate the drive pinion or right-hand wheel to align the splines of the shift collar and case half while you turn in the manual engaging capscrew.
B. When the normal amount of spring resistance is again felt on the capscrew, the splines are engaged. Continue to turn in the manual engaging capscrew until the head is approximately 1/4 inch from the cylinder cover.

7. Remove the carrier from the axle housing as described in steps 8 through 15 on page 5.

section 6 Driver Controlled Main Differential Lock

Remove Differential And Gear Assembly

1. To remove the differential lock sliding shift collar, tap out the two retainer roll pins until thev are level with the inner face of the shift fork. Release the differential lock if it is manually engaged. **Figure 133.**

Figure 133

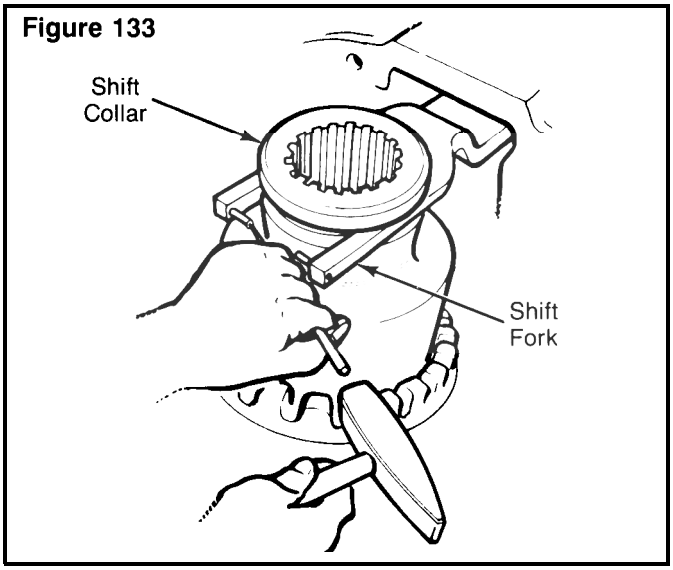

2. If required, remove the differential lock shift unit.

A. Remove the sensor switch and lock nut.

B. Remove the four capscrews and washers that hold the cylinder cover. Remove the cover and copper gasket. **Figure 134.**

Figure 134

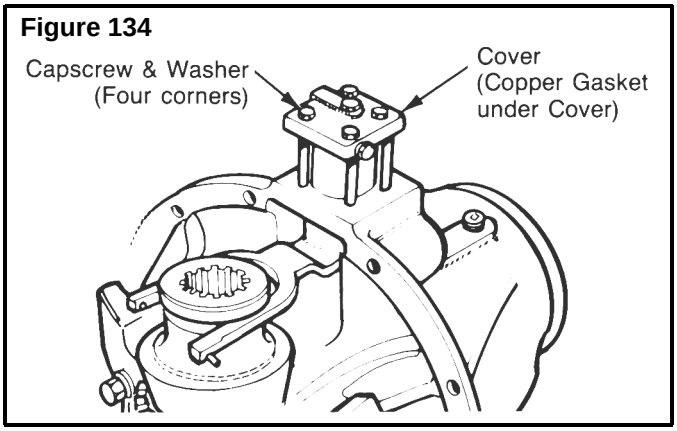

C. Remove the shift unit-cylinder and piston. Remove the O-ring from the piston.

D. Remove the shift shaft from the shift fork. The shaft may be Ioctited to the fork, use the heating procedure to breakdown Ioctite. The recommended procedure is similar to "Remove Dri-Lock Fasteners" on page 21.

E. Remove the shift shaft spring and flat washer.

NOTE:

Some models use silastic seal instead of the flat washer in Step E.

F. Remove the shift fork,

NOTE:

A roll pin is installed in the shift shaft and is used as a stop for the shift shaft spring. It is not necessary to remove this roll pin during a normal disassembly.

3. Remove the cotter keys*, pins* or lock plates* that hold the two bearing adjusting rings in position. Use a small drift and hammer to remove pins. Each lock plate is held in position by two capscrews.

4. Match mark one bearing cap and one carrier leg so that these parts will be assembled in the correct positions. Remove the bearing cap capscrews and washers, the bearing caps and the adjusting rings.

5. Lift the differential and gear assemblv from the carrier. Tilt the assembly as required to permit the ring gear to clear the support for the pinion spigot bearing. **Figure 135.**

Figure 135

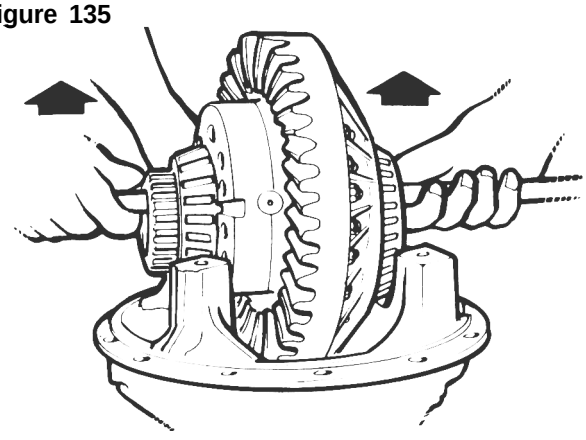

● *Some Rockwell carriers do not have the parts described.*

FURTHER DISASSEMBLY OF THESE CARRIERS IS THE SAME AS AXLES WITHOUT THE DRIVER CONTROLLED MAIN DIFFERENTIAL LOCK. TO CONTINUE DISASSEMBLY FOLLOW THE PROCEDURES STARTING ON PAGE 8.

PREPARE PARTS FOR ASSEMBLY, ADJUSTMENTS, AND CARRIER ASSEMBLY (UP TO THE POINT OF "INSTALL DIFFERENTIAL CARRIER INTO AXLE HOUSING" ON PAGE 51) ARE ALSO THE SAME FOR BOTH AXLES.

Install Differential Shift Assembly

Install the differential shift assembly after the differential carrier is assembled and the gear and bearing adjustments are made. Parts of the shift assembly are shown in **Figure 136.**

Figure 136

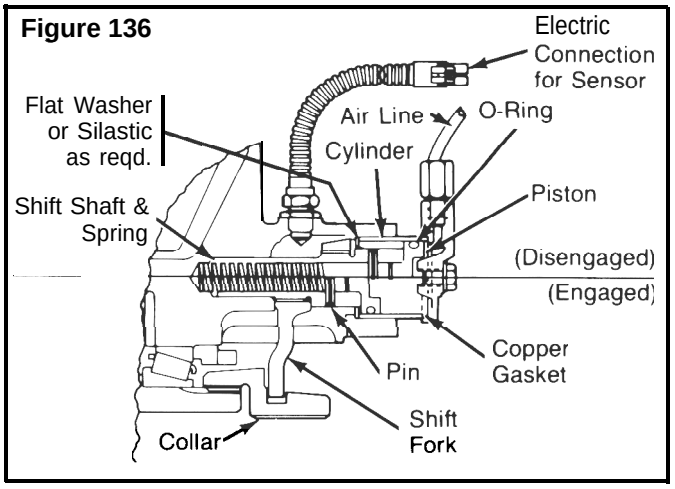

1. Install the two roll pins into the ends of the shift fork. Tap the pins into position until they are level with the inner yoke face. **Figure 137.** Do not install completely at this time.

Figure 137

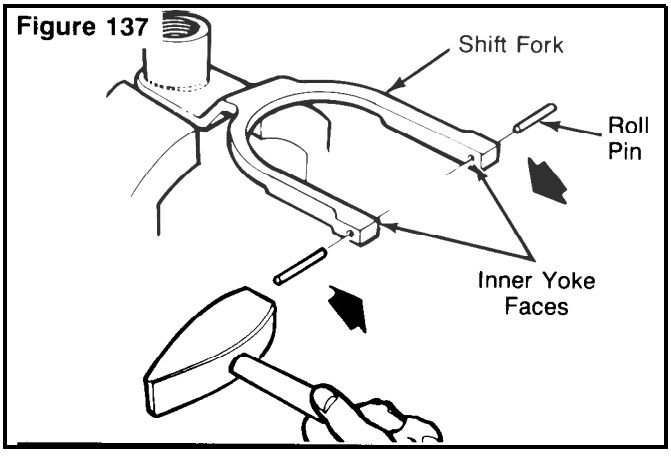

2. If the spring stop roll pin was removed from the head of the shift shaft, install the pin at this time,

3. Apply Loctite 222 (Rockwell Part No. 2297-B-61 12) to the threads of the shift shaft.

4. Install the shift fork into its correct position in the carrier case. **Figure 138.**

Figure 138

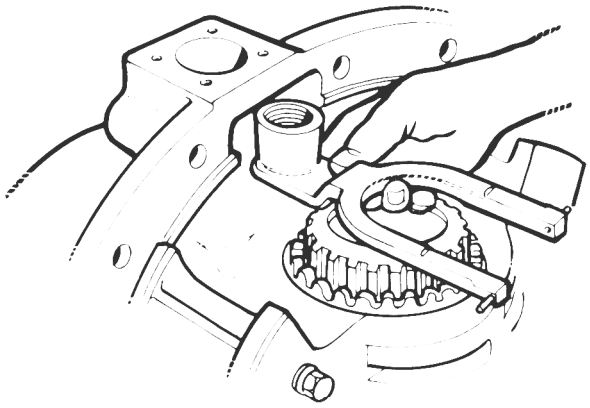

5. Hold the shift fork in position and install the shift shaft spring into the shift shaft opening in the carrier, through the shift fork bore and into the bore for the shift shaft spring. **Figure 139.**

Figure 139

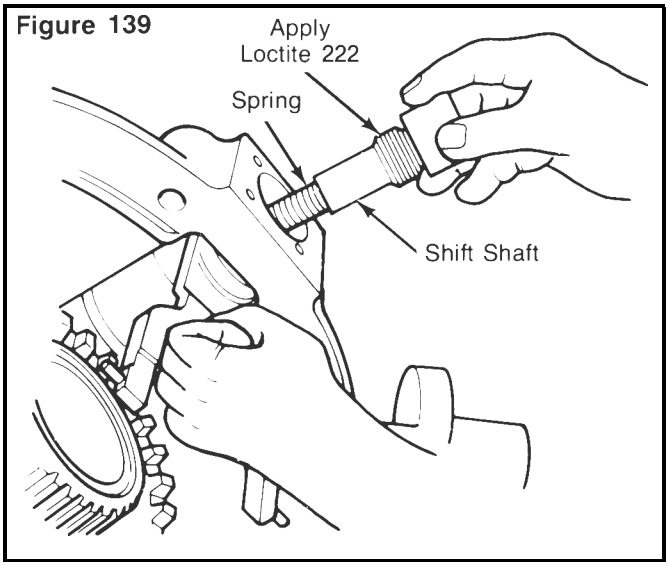

6. Slide the shift shaft over the spring and install the shaft into the shift fork. Tighten to 20-25 lb. ft. (27-34 N.m) torque. T

7. Install the flat washer (when used) or apply silastic sealant (Rockwell Part No. 1199-Q-2981) to the bottom of the cylinder bore. **Figure 140.**

Driver Controlled Main Differential Lock

8. Install the O-ring into its groove on the piston. Lubricate the O-ring with axle lubricant. Install the piston into the air cylinder. **Figure 140.**

Figure 140

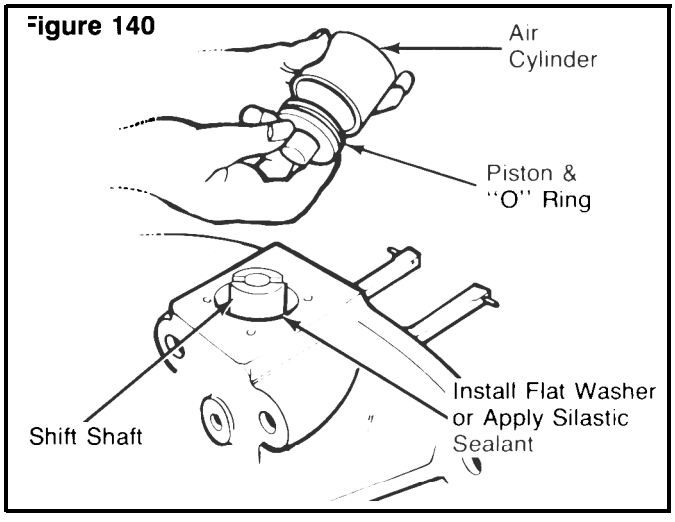

9. Install the cylinder into the housing bore. Make sure that the pilot journal on the piston is against its bore on the shift shaft. **Figure 141.**

Figure 141

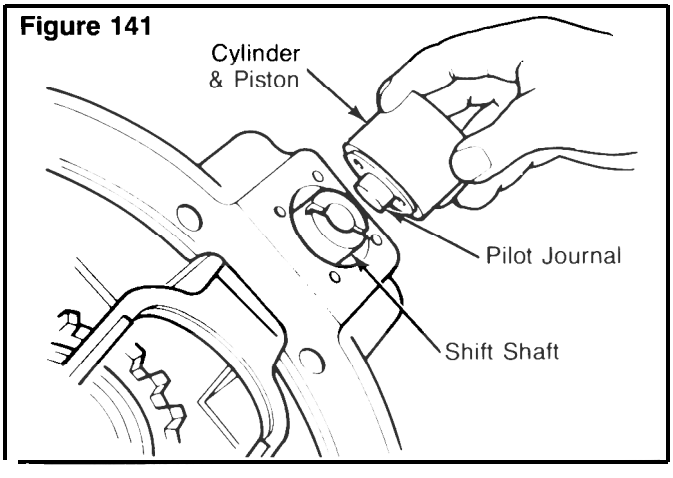

10. Install the copper gasket into its bore on the inside of the cylinder cover. Put the cover in position over the cylinder so that the air intake port will point up when the carrier is installed into the housing. install the cover with the four attaching capscrews and washers. Tighten to 7.4-8.9 lb. fi. (10-12 N.m) torque. **Figures 136 and 142.** T

11. Slide the shift collar into the fork and engage the shift collar splines with the splines of the differential case. Use the manual actuation capscrew to move the shift collar splines into the differential case splines. See "Manual Engaging Method" on page 60.

Figure 142

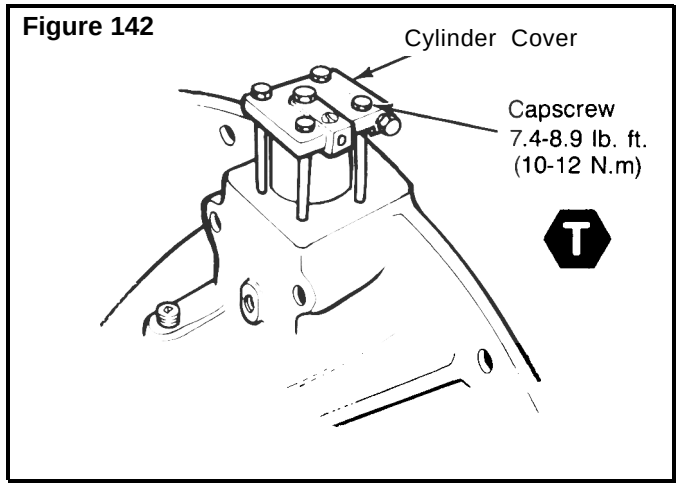

12. Hold the shift collar in the locked (engaged) position and tap in the two roll pins in the shift fork ends until they are level with the outer yoke faces, **Figure 143.**

Figure 143

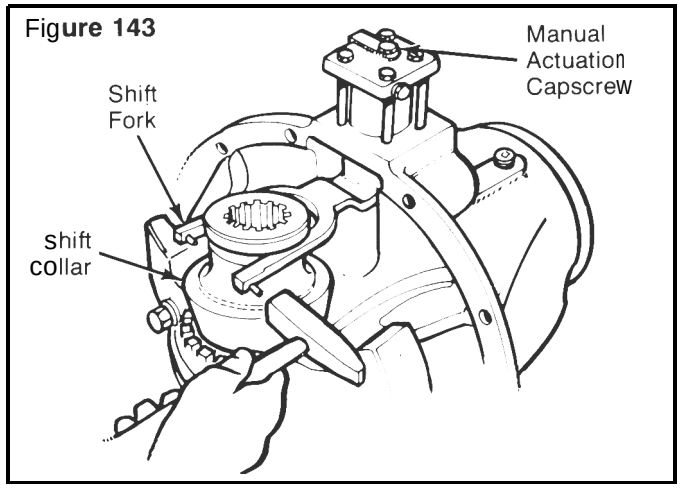

13. While the shift collar is still in the locked position, put the sensor switch (with the lock nut loosely attached) into its hole.

14. Connect a battery/bulb tester to the sensor switch and rotate the switch into its hole until contact with the shift fork causes the light to go on. Turn the switch one additional revolution and tighten the lock nut to 26-33 lb. ft. (35-45 N.m) torque. T

NOTE:

For carriers without the differential lock (Less Air Shift), assemble the sensor switch plug and cover plate as follows:

1. Install the washer and plug into the hole for the sensor switch. Tighten the plug to 45-55 lb. ft. (60-74 N.m). **Figure 145.** T

2. Apply silicone gasket material to the cover plate mounting surface on the carrier. (See procedures on page 21).

3. Install the four washers and capscrews. Tighten the capscrews to 7.4-8.9 lb. ft. (10-12 N.mj. (T) **Figure 144.**

Figure 144

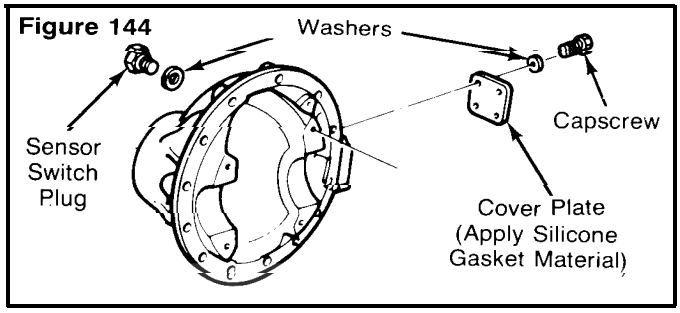

NOTE:

When the carrier is to be installed into the axle housing, the shift collar must be held in the engaged position. This can be done by keeping the air pressure applied to the shift cylinder (see "Air Pressure Method" on page 60), or by using the manual engaging bolt (see "Manual Engaging Method" on page 60). Failure to keep the differential in the locked (engaged) position will make it impossible to install the carrier assembly into the axle housing.

After the carrier is installed into the axle housing, shift the differential into the unlocked (disengaged) position to permit the installation of the right hand axle shaft.

Install Carrier Into Axle Housing

1. Clean the inside of the axle housing and the mounting surface where the carrier fastens. Use a cleaning solvent and rags to remove the dirt. Blow dry the cleaned areas with compressed air. (See procedures on page 15).

WARNING:

Be careful when using cleaning solvent. Follow the solvent manufacturer's instructions for safe use to prevent injury.

2. Inspect the axle housing for damage. If necessary, repair or replace the housing. (See procedures on pages 17 to 19).

3. Check for loose studs in the mounting surface of the housing where the carrier fastens. Remove and replace the studs where required.

4. Install the differential carrier into the housing. Use one of the following procedures.

Air Pressure Method:

A. Before the carrier is installed into the housing, install the right-hand axle shaft through the shift collar and into the side gear. (The axle shaft is being used as a spline alignment tool).

NOTE:

A similar tool can be made from a damaged right-hand axle shaft by cutting off approximately 24 inches from the spline end.

B. Align the splines of the shift collar and differential case half by rotating the axle shaft tool or drive pinion.

WARNING:

Do not use your hands to hold the collar in position. Injury can result when air pressure is applied to the actuator.

C. Connect an auxiliary air supply to the actuator assembly.

D. Apply and hold pressure to the actuator assembly. The air pressure will move the shift collar to engage the differential case half and lock the assembly.

E. If the shift collar has not moved the full distance on the splines of the differential case half, rotate the axle shaft tool or the drive pinion one complete rotation to the right or left.

F. Remove the axle shaft tool from the carrier.

NOTE:

Continue to hold the main differential in the locked (engaged) position with air pressure until the carrier is completely installed in the axle housing. If no air supply is available, use the "Manual Engaging Method" on this page to lock (engage) the differential.

G. Apply silicone gasket material to the mounting surface of the housing where the carrier fastens. (See procedures on page 21).

H. Install the carrier into the axle housing. Follow steps 6-10 on page 51.

I. Release the air pressure from the differential lock actuator and disconnect the auxiliary air supply.

J. Proceed to Step 5 on page 61.

Manual Engaging Method:

A. Align the splines of the shift collar and the differential case half. This can be done by hand or by installing the right-hand axle shaft through the shift collar and into the side gear. See Steps A and B of the "Air Pressure Method" on this page.

B. Install the manual engaging capscrew into the threaded hole in the center of the cylinder cover.

C. Turn the manual adjusting capscrew to the right until the head of the capscrew is approximately 1/4 inch from the cylinder cover. DO NOT turn the capscrew beyond its normal stop. The capscrew is now in the service position and the main differential lock is completely engaged.

CAUTION:

There will be a small amount of spring resistance felt when you turn in the manual engaging capscrew. If a high resistance is felt before reaching* the locked (engaged) position, STOP TURNING THE CAPSCREW, or the *cover, fork and capscrew threads will be damaged.

A high resistance on the capscrew indicates that the splines of the shift collar and the differential case half are not aligned or engaged.

Lift the shift collar as required and rotate to align the splines of collar and case half while you turn in the manual engaging capscrew. When the normal amount of spring resistance is again felt on the capscrew, the splines are engaged. Continue to turn in the manual engaging capscrew.

D. Install and fasten the carrier into the axle housing. Follow Steps G and H of the "Air Pressure Method" on page 60.

E. Remove the plug and gasket from their position. Remove the manual engaging capscrew from its service position.

NOTE:

***When the manual engaging capscrew is removed from the service position in the actuator, the main differential lock* becomes disengaged.**

F. Clean the plug, gasket, cylinder cover, and threaded hole in the center of the cylinder cover.

G. Install the plug and gasket into their operating position in the cylinder cover. Install the manual engaging capscrew into its storage position. See **Figure 145.**

Figure 145

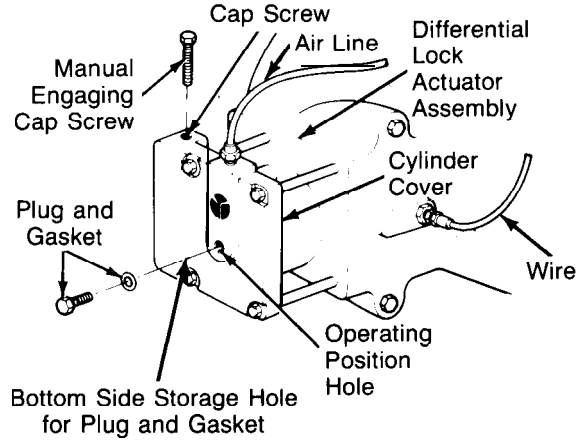

H. Tighten the plug to 44-55 lb. ft. (60-75 N.m) torque. Tighten the manual engaging capscrew to 22-28 lb. ft. (30-38 N.m). T

5. Connect the vehicle air line to the differential lock actuator assembly.

6. Install the electrical connection on the sensor switch located in the carrier, below the actuator assembly.

7. Install the right and left-hand axle shafts. Follow the procedures in Steps 2 through 4 of "Before Towing" on page 26.

8. Remove the jack stand from under the drive axle and lower the vehicle to the floor.

Check the Differential Lock

1. Shift the vehicle transmission to neutral and start the engine to get the system air pressure to the normal level.

⚠ *WARNING:*

Do not start the vehicle engine and engage the transmission with one wheel raised from the floor. When the differential is in locked (engaged) position, power will go to the wheel on the floor and cause the vehicle to move.

2. Put the differential lock switch (in the cab of the vehicle) in the unlocked (disengaged) position.

3. Drive the vehicle at 5-10 MPH (8-16 kmph) and check the differential lock indicator light. The light must be off when the switch is in the unlocked position.

4. Continue to drive the vehicle and put the differential lock switch in the locked (engaged) position. Let up on the accelerator to remove the driveline torque and permit the shift. The light must be on when the switch is in the locked position.

NOTE:

If the indicator light remains "on" with the switch in the unlocked position, the differential is still in the locked position. Check to make sure that the manual engaging capscrew was removed from the cylinder cover of the actuator assembly. See Steps E through H of "Manual Engaging Method" on this page.

Driver Caution Label

Figure 146



Check to see that the "Driver Caution" label is installed in the vehicle cab. The caution label must be put in a location that is easily visible to the driver. A recommended location is on the instrument panel, next to the differential lock switch and lock indicator light. Driver Caution labels (Tp-861 01) are available from Rockwell International, Troy, Michigan. **Figure 146.**

section 7

Lubrication

NOTE:
For complete information on lubricating drive axies and carriers, see Rockwell Fieid Maintenance Manual No. 1.

See the following charts 4, 5 and 6 for standard information on lubricants, schedules and capacities.

Chart 4

LUBRICANT CROSS REFERENCE (VISCOSITY) AND TEMPERATURE CHART

Rockwell Lubricant Specification	Description	Cross Reference	Minimum Outside Temperature	Maximum Outside Temperature
O-76-A	Hypoid Gear Oil	GL-5, S.A.E. 85W140	– *12.2°C (*+ 10°F)	. . .**
O-76-B	Hypoid Gear Oil	GL-5, S.A.E. 80W/140	– 26.1 °C (– 15”F)	. . .**
O-76-D	Hypoid Gear Oil	GL-5, S.A.E. 80W/90	– 26.1 °C (– 15”F)	... **
O-76-E	Hypoid Gear Oil	GL-5, S.A. E. 75W/90	– 40”C (– 40°F)	. . .**
O-76-J	Hypoid Gear Oil	GL-5, S.A.E. 75W	– 40”C (– 40”F)	+ 1.6°C (+ 35”F)
O-76-L	Hypoid Gear Oil	GL-5, S.A. E. 75WH140	– 40”C (– 40rF)	. .. -**

● *There is no upper limit on these outside temperatures, but the axle sump temperature MUST NEVER EXCEED + **121°C (250”F)**

Chart 5

LUBRICATION SCHEDULE

• Heavy-Duty On-Highway • On and off Highway • Off-Highway		• Common Carrier On-Highway	
Less than 60,000 miles (96,000 Km) a year	More than 60,000 miles (96,000 Km) a year	Less than 100,000 miles (160,000 Km) a year	More than 100,000 miles (160,000 Km) a year
Two Times A Year	25,000 to 30,000 miles (40,000 to 48,000 Km)	One Time A Year	100,000 miles (160,000 Km)
NOTE: If operation is continuous heavy-duty, check lubricant each 1,000 miles (1,600 Km).			

CHART 6

LUBRICANT CAPACITIES

Use the following lubricant capacities as a guide only. The capacities are measured with the drive pinion in the horizontal position. When the angle of the drive pinion changes, the lubricant capacity of the axle will change.

AXLE MODEL	CAPACITY	
	U.S. Pints	Liters
Single Drive Axles		
A-150	5.5	2.6
B-100	10	4.7
B-140	12	5.7
B-1 50	3.5	1.7
C-1 00	12.5	5.9
D-1OO	12.5	5.9
D-140	12.5	5.9
E-1 00	15	7.1
E-105	12.5	5.9
E-1 50	9	4.3
F-1 00	13	6.2
F-1 06	13	6.2
F-120	15	7.1
F-1 21	15	7.1
F-1 40	14	6.6
FDS-75	14	6.6
FDS-65	15	7.1
FDS-90	14	6.6
FDS-750	7	3.3
FDS-1600	23	10.9
FDS-1800	35	16.6
FDS-1805	35	16.6
G-161	21	9.9
H-1OO	20	9.5
H-140	21	9.9
H-150	11	5.2
H-162	20	9.5
H-1 70	27*	12.8*
H-1 72	27	12.8
L-1 00	23	10.9
L-140	24	11.4
L-155	24	11.4
L-172	27	12.8
M-172	27	12.8
QT-140	24	11.4
Q-1 00	31	14.7
Q-1 45	24	11.4
RL-170	48	22.7
R-100	30	14.2
R-140	28	13.2
R-1 55	28	13.2
R-1 60	28	13.2
R-163	34	16.1
R-1 70	43	20.3
s-1 70	43	20.3
U-140	24	11.4
u-1 70	43	20.3
w-1 70	43	20.3
RS-13-120	15	7.2
RS-1 5-120	15	7.2
RS-1 6-141	31	14.7
RS-1 7-140	32	15.4
RS-I 7-141	31	14.7
RS-1 9-145	36	17.3
RS-21-145	35	16.9
RS-23-160	43141	0.7/19.5
RS-23-180	39	18.6
RS-26-160	51	24.2
RS-26-180	38	18.3
RS-30-180	38	18.3
Rear Axle Of Tandems		
SDHD (DHR rear)	16	7.6
SFHD (FHR rear)	16.5	7.8
SHHD (HHR rear)	26	12.3
SL-1OO (LR-1OO rear)	37	17.5
SLHD (LHR rear)	32	15.1
SQ-I 100 (QR-1OO rear)	33	15.7
SQHD (QHR rear)	31	14.7
SQHP (QAR rear)	36	17
SR-170 (RR-170 rear)	43	20.3
SRHD (RHR rear)	36	17
SSHD (SHR rear)	28	13.2
ST-1 70 (TR-170 rear)	43	20.3
STHD (THR rear)	28	13.2
Su-170 (U R-170 rear)	43	20.3
SUHD (UHR rear)	28	13.2
SW-170 (WR-170 rear)	43	20.3
RT-34-140 (RR-17-140)	35	16.9
RT-34-145 (RR-17-145 rear)	36	17.1
RT-40-140 (RR-20-1 40)	35	16.9
RT-40-145 (RR-20-145 rear)	36	17.3
RT-44-145 (RR-22-1 45 rear)	35	16.9
RT-46-160 (RR-23-160 rear)	43/41	20.7/19.5
RT-52-160 (RR-26-160 rear)	51	24.2
RT-48-I 80 (RR-24-180 rear)	39	18.6
RT-52-180 (RR-26-1 80 rear)	39	18.3
RT-58-180 (RR-29-180 rear)	39	18.3

'Includes 1 pint (0.97 liter) for each wheel end and with drive pinion angle at 3".

section 8 Fastener Torque Info.

Torque Values for Fasteners

General Information.

1. The torque values in chart 7 are for fasteners that have a light application of oil on the threads.

2. If the fasteners are dry, increase the torque values by ten percent (10%).

3. If the fasteners have a heavy application of oil on the threads, decrease the torque values by ten percent (10%).

4. If you do not know the size of the fastener that is being installed, measure the fastener. Use the following procedure.

American Standard Fasteners

A. Measure the diameter of the threads in inches, dimension X. **Figure 147.**

Figure 147

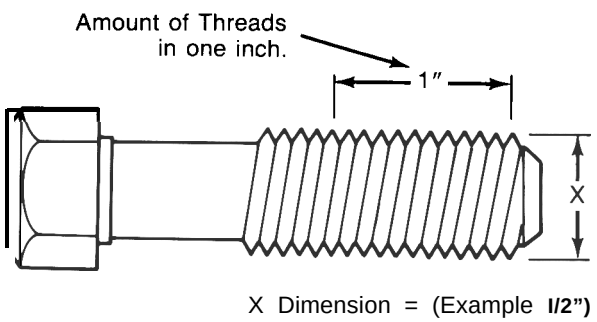

X Dimension = (Example **I/2")**

B. Count the amount of threads there are in one inch (1.0 inch). **Figure 147.**

Example of an American Standard size fastener is .50 -13.
The .50 is the diameter of the fastener in inches or dimension X.
.50 -13 is the amount of threads in one inch (1.0

Metric Fasteners

A. Measure the diameter of the threads in millimeters (mm), dimension X. **Figure 148.**

Figure 148

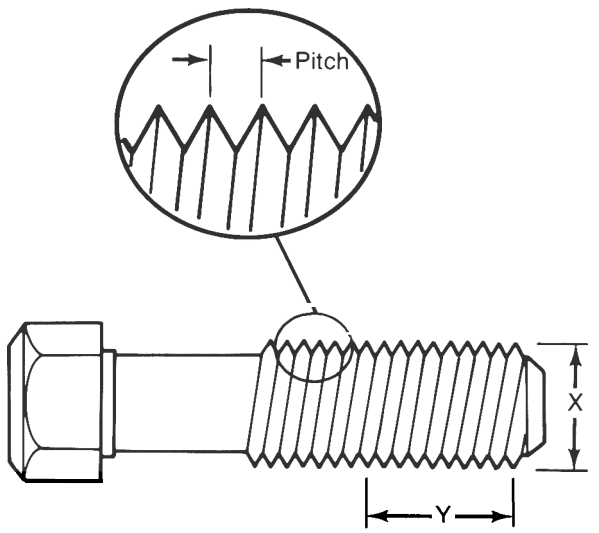

X Dimension = (Example M8 or 8.mm)
Y Dimension = Distance of 10 Threads

B. Measure the distance of ten (10) threads, point to point in millimeters (mm), dimension Y. Make a note of dimension Y. Figure **148.**

C, Divide dimension Y by ten (10). The result will be the distance between two threads or pitch.

Example of a Metric size fastener is M 8 x 1.25.

The M 8 is the diameter of the fastener in millimeters (mm) or dimension X.

The 1.25 is the distance between two threads or pitch.

5. Compare the size of fastener measured in step 4 to the list of fasteners in chart 7 to find the correct torque value.

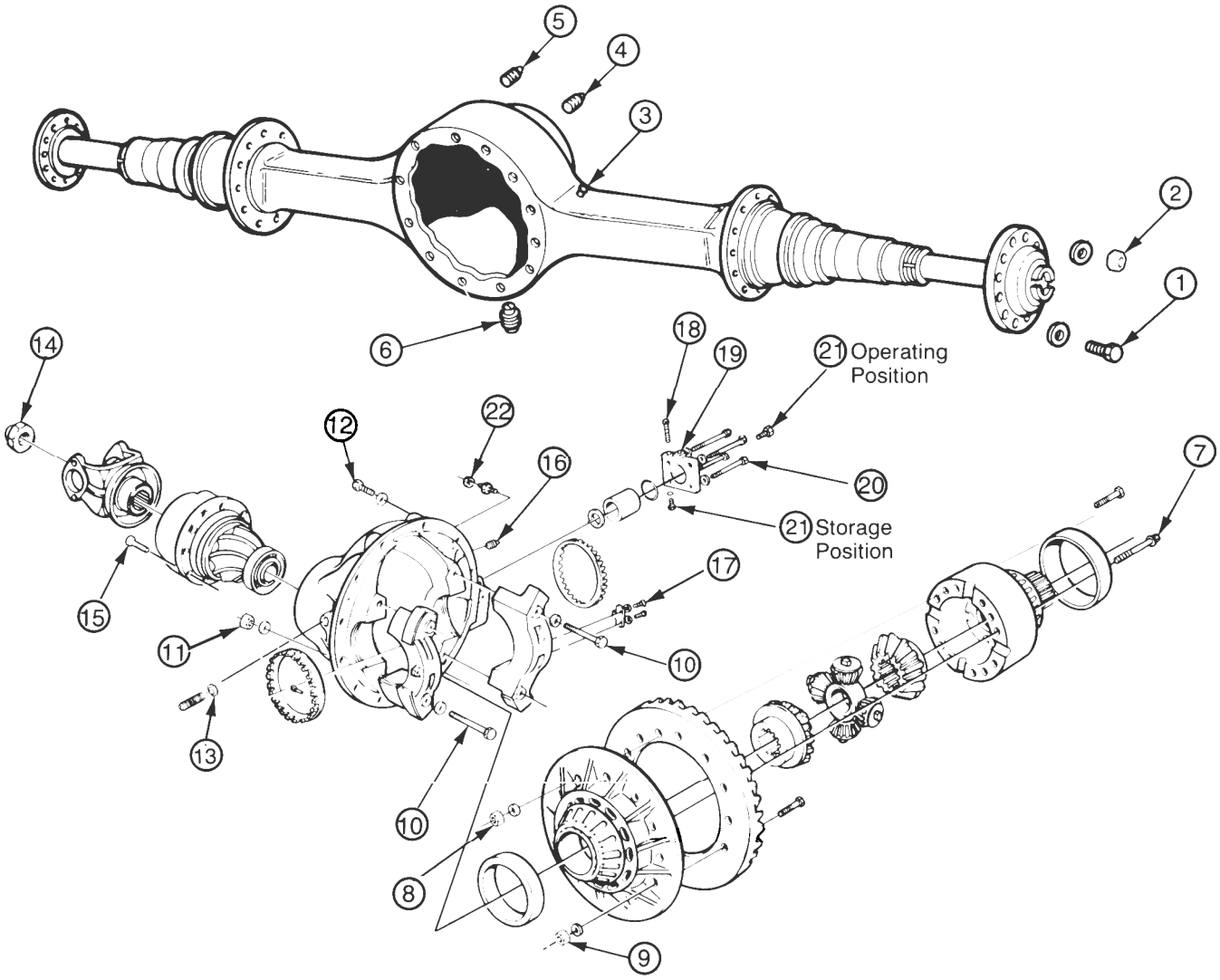

CHART 7

FASTENER TORQUE CHART

	FASTENER	THREAD SIZE	TORQUE VALUE lb-ft (N.m)	
1.	* Capscrew, Axle Shaft	.31-24	18-24	(24-33)
		.50-13	85-115	(115-156)
2.	* Nut, Axle Shaft Stud	Plain Nut		
		.44-20	50-75	(68-102)
		.50-20	75-115	(1 02-1 56)
		.56-18	110-165	(149-224)
		.62-18	150-230	(203-31 2)
		Lock Nut		
		.44-20	40-65	(54-88)
		.50-20	65-100	(88-136)
		.56-18	100-145	(1 36-1 97)
		.62-18	130-190	(176-258)

" Some Rockwell carriers do not have the parts described.

CHART 7 (Continued)

	FASTENER	THREAD SIZE	TORQUE VALUE lb-ft (N.m)
3.	Breather	.38-18	20 minimum (27 minimum)
4.	*Plug, Oil Fill (Housing)	.75-14	35 minimum (47.5 minimun)
5.	*Plug, Heat Indicator	.50-14	25 minimum (34 minimum)
6.	Plug, Oil Drain	.50-14	25 minimum (34 minimum)
7.	Capscrew, Differential Case	.38-16	35-50 (48-68)
		.44-14	60-75 (81-102)
		.50-13	85-115 (115-156)
		.56-12	130-165 (176-224)
		.62-11	180-230 (244-312)
	Grade 10.9 Flange Head	M12 x 1.75	85-103 (115-140)
	Grade 10.9 Standard Hex Head	M12 x 1.75	75-95 (100-130)
	Grade 12.9 Standard Hex Head	M12 x 1.75	105-125 (143-169)
		M16 x 2	203-251 (275-340)
8.	*Nut, Differential Case Bolt	.50-13	75-100 (102-136)
		.50-20	85-115 (115-156)
		.62-11	150-190 (203-258)
		.62-18	180-230 (244-312)
		M12 x 1.75	74-96 (100-130)
9.	*Nut, Ring Gear Bolt	.50-13	75-100 (102-136)
		.50-20	85-115 (115-156)
		.62-11	150-190 (203-258)
		.62-18	180-230 (244-312)
		M12 x 1.25	66-81 (90-110)
		M12 x 1.75	77-85 (104-115)
	Flange Head	M16 x 1.5	192-214 (260-290)
	Standard Hex Head	M16 x 1.5	190-225 (260-305)
10.	Capscrew, Bearing Cap	.56-12	110-145 (149-197)
		.62-11	150-190 (203-258)
		.75-10	270-350 (366-475)
		.88-14	360-470 (488-637)
		.88-9	425-550 (576-746)
		M16 x 2	181-221 (245-300)
		M20 x 2.5	347-431 (470-585)
		M22 x 2.5	479-597 (650-810)
11.	Nut, Housing to Carrier Stud	.44-20	50-75 (68-102)
		.50-20	75-115 (102-156)
		.56-18	110-165 (149-224)
		.62-18	150-230 (203-312)
12.	Capscrew, Carrier to Housing	.44-14	50-75 (68-102)
		.50-13	75-115 (102-156)
		.56-12	110-165 (149-224)
		.62-11	150-230 (203-312)
		.75-10	270-400 (366-542)
		M12 x 1.75	74-89 (100-120)
		M16 x 2	181-221 (245-300)

• *Some Rockwell carriers do not have the parts described.*

CHART 7 (Continued)

	FASTENER	THREAD SIZE	TORQUE VALUE lb-ft (N.m)
13.	*Jam Nut, Thrust Screw	.75-16 .88-14 1.12-16 M22 x 1.5 M30 x 1.5	150-190 (203-258) 150-300 (203-407) 150-190 (203-258) 148-210 (200-285) 236-295 (320-400)
14.	Nut, Drive Pinion	.88-20 1.0-20 1.25-12 1.25-18 1.50-12 1.50-18 1.75-12 M32 x 1.5 M39 x 1.5 M45 x 1.5	200-275 (271-373) 300-400 (407-542) 700-900 (949-1220) 700-900 (949-1220) 800-1100 (1085-1491) 800-1100 (1085-1491) 900-1200 (1220-1627) 738-918 (1000-1245) 922-1132 (1250-1535) 996-1232 (1350-1670)
15.	Capscrew, Bearing Cage	.38-16 .44-14 .50-13 .56-12 .62-11 M12 x 1.75	30-50 (41-68) 50-75 (68-102) 75-115 (102-156) 110-165 (149-224) 150-230 (203-312) 74-96 (100-130)
16.	*Plug, Oil Fill (Carrier)	.75-14 1.5-11.5 M24 x 1.5	25 minimum (34 minimum) 120 minimum (163 minimum) 35 minimum (47 minimum)
17.	*Capscrew, Lock Plate	.31-18 M8 x 1.25	20-30 (27-41) 21-26 (28-35)

THE FOLLOWING FASTENERS AND TORQUE VALUES ARE FOR DIFF. LOCK CARRIERS ONLY

18.	Capscrew, Manual Actuation (Storage Position)	M1O X 1.5	15-25 (20-35)
19.	Adapter, Air Cylinder	M12 X 1.5	22-30 (30-40)
20.	Capscrew, Air Cylinder Cover	M 6 x 1	7.4-8.9 (10-12)
21.	Capscrew/Plug, Air Cylinder Cover (Operating Position) (Storage Position)	MIO X1.5	 15-25 (20-35) 15-25 (20-35)
22.	Lock Nut, Sensor Switch	M16X1	26-33 (35-45)

** Some Rockwell carriers do not have the parts described.*

section 9 Adjustments and Specifications

DRIVE PINION BEARINGS - PRELOAD

	PAGE
Specification: New bearings -5 to 45 lb-in (.56 to 5.08 N.m) torque Used bearings in good condition - 10-30 lb-in (1 .13 to 3.39 N.m) torque **Adjustment:** Preload is controlled by the thickness of the spacer between bearings. To increase preload install a thinner spacer To decrease preload install a thicker spacer	31

DRIVE PINION - DEPTH IN CARRIER

Specification: Install the correct amount of shims between the bearing cage and carrier. To calculate, use old shim pack thickness and new and old pinion cone numbers. **Adjustment:** Change the thickness of the shim pack to get a good gear tooth contact pattern	35-37

HYPOID GEAR SET - TOOTH CONTACT PATTERNS (HAND ROLLED)

Specification: Conventional gear set - Toward the toe of the gear tooth and in the center between the top and bottom of the tooth Generoid gear set - Between the center and toe of the tooth and in the center between the top and bottom of the tooth **Adjustment:** Tooth contact patterns are controlled by the thickness of the shim pack between the pinion bearing cage and carrier and by ring gear backlash To move the contact pattern lower, decrease the thickness of the shim pack under the pinion bearing cage To move the contact pattern higher, increase the thickness of the shim pack under the pinion bearing cage To move the contact pattern toward the toe of the tooth decrease backlash of the ring gear To move the contact pattern toward the heel of the tooth increase backlash of the ring gear	47-49

MAIN DIFFERENTIAL BEARINGS - PRELOAD

Specification: 15 to 35 lb-in (1.7 to 3.9 N.m) torque OR Expansion between bearing caps - RS-140 and RS-145 carrier models -.003 to .009 inch (.08 to .22 mm) All other carrier models -.006 to .013 inch (.15 to .33 mm) **Adjustment:** Preload is controlled by tightening both adjusting rings after zero end play is reached	43

SECTION 12:
BRAKE AND AIR SYSTEM

CONTENTS

1. DESCRIPTION....12-6
   - 1.1 Air System....12-6
   - 1.2 Brakes....12-6
   - 1.3 Maintenance....12-6
     - 1.3.1 Lubrication....12-6
     - 1.3.2 Brake Adjustment....12-6
2. AIR RESERVOIRS....12-6
   - 2.1 Location and Function....12-6
   - 2.2 Maintenance....12-7
     - 2.2.1 Wet (Main) Air Tank....12-7
     - 2.2.2 Primary Air Tank....12-7
     - 2.2.3 Secondary Air Tank....12-7
     - 2.2.4 Accessory Air Tank....12-7
     - 2.2.5 Kneeling Air Tank and Emergency/Parking Brake Overrule Air Tank (If Applicable) 12-8
3. FILL VALVES....12-8
4. ACCESSORY AIR FILTER....12-8
   - 4.1 Servicing....12-8
   - 4.2 Disassembly....12-8
   - 4.3 Cleaning....12-8
   - 4.4 Reassembly....12-9
5. AIR GAUGES (PRIMARY AND SECONDARY)....12-9
6. AIR DRYER (SYSTEM SAVER 1000)....12-9
7. AIR LINES AND HOSES....12-10
   - 7.1 Tubing and Hoses....12-10
     - 7.1.2 Nylon Tubing....12-10

7.1.3 Flexible Hoses 12-10
7.2 Air Line Serviceability Test 12-10
7.2.1 Operating Test 12-10
7.2.2 Leakage Test 12-11
7.3 Maintenance 12-11
8. PRESSURE REGULATING VALVES 12-11
8.1 Description 12-11
8.2 Maintenance 12-12
8.3 Pressure Setting Procedure 12-12
9. DOOR EMERGENCY RELEASE VALVE 12-13
9.1 Removal and Installation 12-13
10. AIR SYSTEM COMPONENTS 12-13
10.1 Air Compressor (TU-FLO 750) 12-13
10.1.1 Removal and Installation 12-14
10.2 Governor (D-2) 12-14
10.3 Push-Pull Control Valve (PP-1) 12-14
10.4 Flip-Flop Control Valve (TW-1) 12-14
10.5 Horn Valve (HV-3) 12-14
10.6 Dual Brake Application Valve (E-15) 12-14
10.6.1 Brake Pedal Adjustment 12-14
10.6.2 Maintenance 12-15
10.7 Stoplight Switches 12-15
10.8 Brake Relay Valves (R-12) 12-15
10.9 Quick Release Valves (QR-1) 12-15
10.10 Spring Brake Valve (SR-1) 12-16
10.11 Pressure Protection Valve (PR-2) 12-16
10.12 Low Pressure Indicators (LP-3) 12-17
10.13 Shuttle-Type Double Check Valve (DC-4) 12-17
11. AIR SYSTEM TROUBLESHOOTING 12-17
12. BRAKE OPERATION 12-17
13. AIR BRAKES 12-18

13.1 Disc Brakes....12-18
13.1.1 Disc Brake Pads....12-18
13.2 Drum Brakes....12-19
13.2.1 Maintenance....12-19
14. RECOMMENDED BRAKE SERVICE PROCEDURES TO REDUCE EXPOSURE TO NON-ASBESTOS FIBER DUST....12-19
15. AIR BRAKE TROUBLESHOOTING....12-20
15.1 Pressure Build-up / Low Pressure Warning / Cutoff Point / Governor Cutout....12-21
15.1.1 High or Low Warning Cutoff Point....12-21
15.1.2 High or Low Governor Cutout Point....12-21
15.1.3 More Than 30 Seconds to Build-up Pressure from 85 to 100 psi (585 - 690 kPa) at Full Engine RPM....12-21
15.2 Air Supply Reservoir Leakage....12-21
15.2.1 Excessive Air Loss....12-22
15.3 Air Brake Leakage....12-22
15.3.1 Excessive Leakage on Brake Service Side....12-22
16. BRAKE AIR CHAMBER....12-22
16.1 Description....12-22
16.2 Maintenance....12-23
16.2.1 Every 6,250 Miles (10 000 km) Depending on Type of Operation....12-23
16.2.2 Every Two Years or After 100,000 Miles (160 000 km) Depending on Type of Operation....12-23
16.2.3 Airtightness Test....12-23
16.3 Emergency/Parking Brake Manual Release....12-23
16.3.1 Drive Axle....12-23
16.3.2 Tag Axle....12-24
16.4 Removal, Installation and Disassembly....12-24
16.4.1 Removal....12-24
16.4.2 Installation....12-24
16.4.3 Disassembly....12-24
17. ANTI-LOCK BRAKING SYSTEM (ABS)....12-25

17.1 Description....12-25
17.2 Troubleshooting and Testing....12-25
18. ABS COMPONENTS....12-25
18.1 Electronic Control Unit....12-25
18.1.1Description....12-25
18.1.2 Welding Procedures....12-26
18.2 ABS Modulator Valve....12-26
18.2.1Description....12-26
18.2.2Maintenance....12-26
18.3 Sensors....12-26
18.3.1Description....12-26
18.3.2Maintenance....12-26
18.3.3Installation....12-26
18.4 Clamping Bush....12-26
18.4.1Description....12-26
18.4.2Maintenance....12-27
19. FITTING TIGHTENING TORQUES....12-27
20. SPECIFICATIONS....12-28

LIST OF ILLUSTRATIONS

FIG. 1: AIR RESERVOIRS LOCATION 12-7
FIG. 2: ENGINE R.H. SIDE COMPARTMENT 12-7
FIG. 3: FRONT SERVICE COMPARTMENT 12-8
FIG. 4: ACCESSORY AIR FILTER ASSEMBLY 12-9
FIG. 5: AIR DRYER 12-9
FIG. 6: AIR PRESSURE REGULATING VALVE 12-11
FIG. 7: AIR PRESSURE REGULATING VALVE 12-12
FIG. 8: R.H. SIDE OF THE DRIVER'S HVAC UNIT ACCESS PANEL 12-13
FIG. 9: AIR COMPRESSOR AND GOVERNOR 12-14
FIG. 10: BRAKE PEDAL ADJUSTMENT 12-15
FIG. 11: FRONT SERVICE COMPARTMENT 12-15
FIG. 12: VALVE MOUNTING PLATE 12-16
FIG. 13: LINING WEAR INDICATOR 12-18
FIG. 14: DRUM BRAKE ASSEMBLY 12-19
FIG. 15: GREASE FITTINGS LOCATION 12-19
FIG. 16: DRUM BRAKE (INSIDE DIAMETER) 12-19
FIG. 17: BRAKE AIR CHAMBERS OPERATION 12-22
FIG. 18: BRAKE AIR CHAMBERS ASSEMBLY 12-22
FIG. 19: FRONT AXLE BRAKE AIR CHAMBER 12-23
FIG. 20: TAG AXLE BRAKE AIR CHAMBER 12-23
FIG. 21: FRONT ELECTRIC COMPARTMENT 12-25
FIG. 22: CLAMPING BUSH 12-27
FIG. 23: HOSE FITTINGS 12-27
FIG. 24: HOSE FITTING 12-27
FIG. 25: HOSE FITTING 12-27
FIG. 26: HOSE FITTING 12-28

1. DESCRIPTION

1.1 Air System

The basic air system consists of an air compressor, reservoirs, valves, filters and interconnecting lines and hoses. It provides a means for breaking, operating controls and accessories, and suspension (refer to Section 16, *"Suspension"*, for complete information on suspension description and maintenance). An air system schematic diagram is annexed to this section for better understanding of the system.

Warning: *Depressurize parts prior to remove them.*

1.2 Brakes

This vehicle uses both the service brake and emergency/parking brake. The service brake air system is divided into two independent circuits to isolate front brakes from rear brakes, thus providing safe breaking in the event that one circuit fails. Front axle brakes operate from the secondary air system, while brakes on both the drive axle and tag axle operate from the primary air system.

Note: *The tag axle service brake operates only when the axle is in normal ride position (loaded and down).*

Furthermore, the brake application sequence, which is increased by a pneumatic relay valve (R-12), will start with the rear axles and will be followed by the front axle, thus providing uniform braking on a slippery road. The vehicle may also be equipped with an Anti-Lock Braking System (ABS), which is detailed later in this section.

The drive and tag axles are provided with spring-applied emergency/parking brakes, which are applied automatically whenever the control valve supply pressure drops below 40 psi (275 kPa). The optional emergency/parking brake overrule system allows the driver to release spring brakes, and to move the vehicle to a safe parking place, such as in the case of a self-application of these brakes due to a drop in air pressure.

1.3 Maintenance

Brake and air system maintenance consist of periodic inspections. Check all parts for damage and brake adjustment (refer to subsequent headings in this section for more details). Ensure all fasteners are tight.

1.3.1 Lubrication

On drive axle, slack adjusters, camshaft bushings and anchor pins are provided with grease fittings. Slack adjusters should be serviced every 6,250 miles (10 000 km), and camshaft bushings every 100,000 miles (160 000 km) or once every two years, whichever occurs first, whereas anchor pins and shoe rollers should be serviced when necessary, and whenever disassembling brakes, using the appropriate lubricants. Refer to Section 24, *"Lubrication"*.

Warning: *Care must be taken when lubricating camshaft bushings, anchor pins and shoe rollers. Too much lubrication could cause lubrication saturation of brake linings and possible safety problems.*

1.3.2 Brake Adjustment

Refer to *"Rockwell Maintenance Manual no.23B - Bus and Coach Brakes"* annexed to this section for drive axle.

2. AIR RESERVOIRS

2.1 Location and Function

The air coming from the air dryer is first forwarded to the wet (main) tank, then to the primary (for the primary brake system), secondary (for the secondary brake system), and accessory (for the pneumatic accessories) air tanks. Refer to the air system schematic diagram annexed to this section.

Two additional air reservoirs may be installed on the vehicle: the kneeling air tank and emergency/parking brake overrule air tank (Fig. 1).

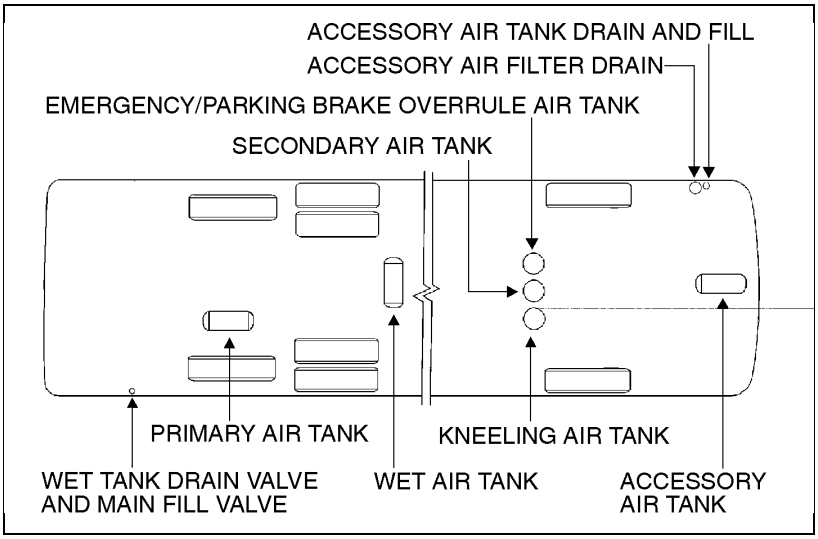

FIGURE 1: AIR RESERVOIRS LOCATION 12032

2.2 Maintenance

Ensure that both the wet (main) tank and accessory tank are purged during pre-starting inspection. Moreover, a good practice is to purge these reservoirs at the end of every working day. The remaining reservoirs must be purged every 12,500 miles (20 000 km) maximum intervals.

2.2.1 Wet (Main) Tank

This reservoir is located over the drive axle in rear wheelhousing, and is provided with bottom drain valve. For daily purge, use the remote drain valve located in engine R.H. compartment (Fig. 2). It is recommended to purge the reservoir by its bottom drain valve every 12,500 miles (20 000 km), or every three months.

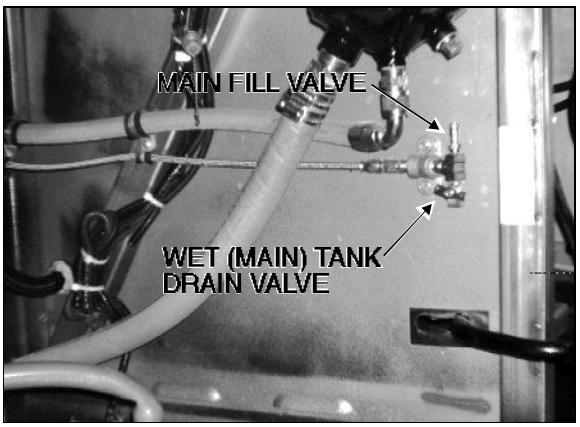

FIGURE 2: ENGINE R.H. SIDE COMPARTMENT 12033

2.2.2 Primary Air Tank

This reservoir is located on R.H. side of rear wheelhousing, right over the tag axle, and is provided with a bottom drain valve. It is recommended to purge it every 12,500 miles (20 000 km) or twice a year.

2.2.3 Secondary Air Tank

This reservoir is located in front wheelhousing, centered behind steering axle, and is provided with a bottom drain valve. It is recommended to purge it every 12,500 miles (20 000 km) or twice a year.

2.2.4 Accessory Air Tank

This reservoir is located in reclining bumper compartment and is provided with a drain valve in front service compartment (Fig. 3). This drain valve could be used for daily purge, and every 12,500 miles (20 000 km) or twice a year.

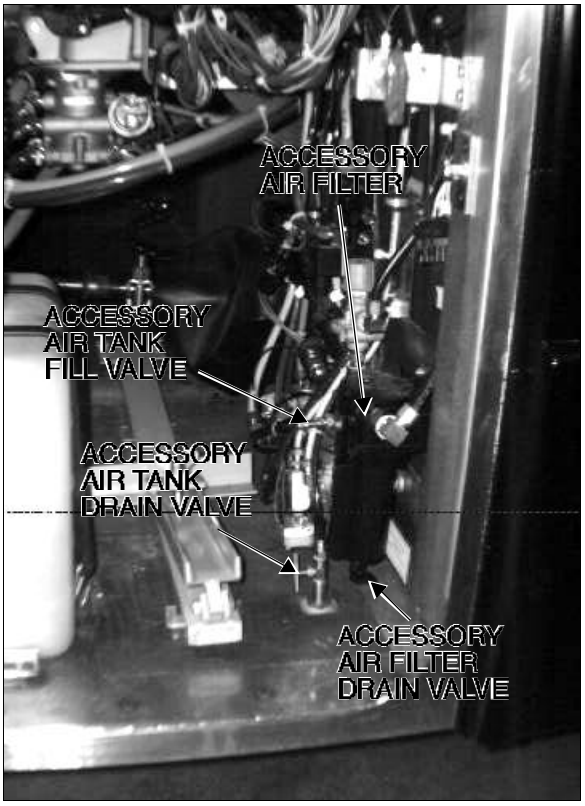

FIGURE 3: FRONT SERVICE COMPARTMENT 12034

2.2.5 Kneeling Air Tank and Emergency/Parking Brake Overrule Air Tank (If Applicable)

These reservoirs are located in front wheelhousing, behind steering axle (R.H. side for kneeling air tank, and L.H. side for emergency/parking brake overrule air tank) and are provided with a bottom drain valve. It is recommended to purge them, with all other reservoirs, every 12,500 miles (20 000 km) or twice a year.

3. FILL VALVES

Two external air supply fill valves are installed to supplement air system. Both are similar to those used on tires, so a standard air line may be used to supply air to the system.

Caution: *No other point should be used to supply air system. The maximum allowable air pressure is 125 psi (860 kPa).*

One valve is located in engine compartment, and is accessible through the engine R.H. side door (Fig. 2). This valve supplies the whole air system. The other fill valve is located in steering compartment, and supplies accessories only (Fig. 3).

4. ACCESSORY AIR FILTER

This filter is located inside the front service compartment (Fig. 3), and its main function consists in straining the air supply of the accessory air reservoir, when it is connected to an external supply line.

Ensure filter is purged whenever supplying the system with an external air line every 12,500 miles (20 000 km) maximum intervals.

Purge filter with the accessory air filter drain valve,by depressing the pin inside drain outlet. Let the moisture come out, then close the drain valve.

4.1 Servicing

Clean or replace filter element when plugged or dirty, or once every two years, or when service life indicator shows approximately one-half red/green whichever occurs first.

4.2 Disassembly

Shut off inlet pressure and reduce pressure in inlet and outlet lines to zero. Filter can be disassembled without removal from air line.

Disassemble filter in general accordance with the item numbers on the exploded view (Fig. 4).

4.3 Cleaning

1. Clean (37, Fig. 4) with warm water only. Clean other parts with warm water and soap solution. Rinse thoroughly with clean water.
2. Blow dry with compressed air making sure the air stream is moisture free and clean. Blow air through filter element (52, Fig. 4) from inside to outside to dislodge surface contaminants. Replace filter element when plugged. Pay particular attention to the internal passages.
3. Inspect all parts for damage and replace if necessary.

4.4 Reassembly

1. Lubricate o-rings with a light coat of o-ring grease, then assemble the filter as shown on the exploded view (Fig. 4).
2. Screw baffle (51, Fig. 4) onto centerpost (53, Fig. 4) until contact is made with element (52, Fig. 4), then tighten and additional ¼ turn. Turn bowl (40, Fig. 4) fully clockwise into body.

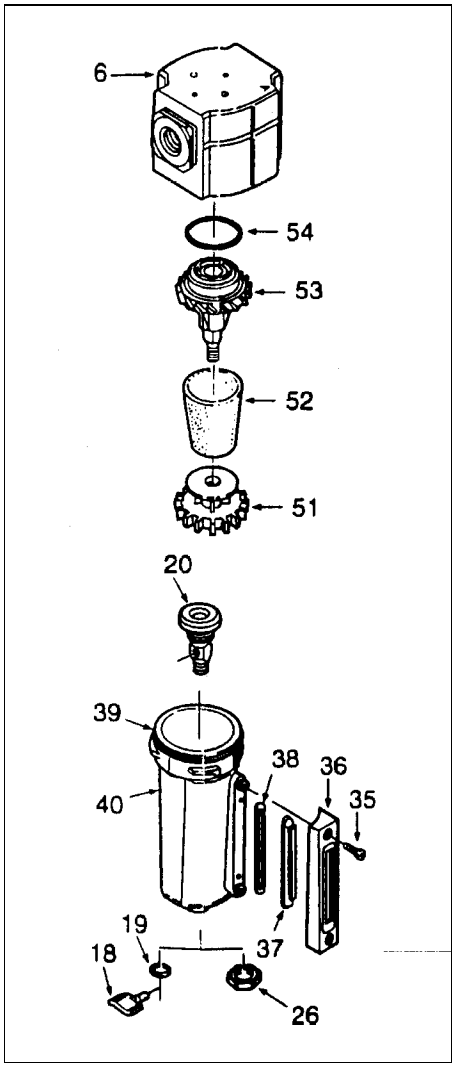

FIG. 4: ACCESSORY AIR FILTER ASSEMBLY 12088

Torque Table (Fig. 4)	
Item	**Inch•Pounds (N•m)**
26 (Nut)	20-25 (2.3-2.8)
35 (Screw)	13-16 (1.5-1.8)
53 (Centerpost)	18-24 (2.0-2.7)

5. AIR GAUGES (PRIMARY AND SECONDARY)

The air pressure gauges, located on the central dashboard panel (see *"Operator's Manual"*), are connected to the DC-4 double check valve, which is located on the R.H. side of the front service compartment. The latter is connected to the air lines running from the primary and secondary air tanks, as shown on the pneumatic system diagram annexed to this manual.

The vehicle should never be set in motion until the buzzer alarm and warning lights turn off, i.e when air pressure registers at least 66 psi (455 kPa). Moreover, if pressure drops below 66 psi (455 kPa), the *"Low air pressure"* warning lights will turn on, and the *"Low air pressure"* buzzer will sound. Stop the vehicle immediately, determine and correct the cause(s) of pressure loss. Check the gauges regularly with an accurate test gauge. Replace the gauge with a new unit if there is a variation of 4 psi (27 kPa) or more in the reading.

6. AIR DRYER (SYSTEM SAVER 1000)

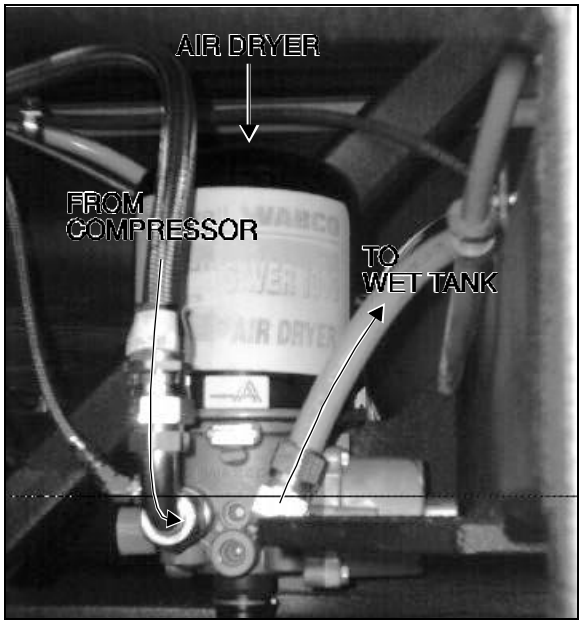

FIGURE 5: AIR DRYER **12035**

The purpose of the air dryer is to remove moisture that could damage the air system before the air enters the system reservoir. The air dryer also filters the air to remove dirt, compressor oil, and other contaminants that can damage the system. Maintenance and repair information on the air dryer are supplied in the applicable booklet annexed to this section under reference "Maintenance manual 4CC". Air dryer is mounted on the rear subframe immediately over the drive axle (Fig. 5).

7. AIR LINES AND HOSES

Copper tubing, nylon-reinforced tubing, and flexible hoses are used to connect the units in the pressurized air system, including air brake system, suspension system, and accessory systems such as door, fresh air damper cylinder, air horns etc. Furthermore, the nylon tubing is color coded to ease identification. Refer to the following table for the complete color identification code. Service instructions for each type of air line are also provided under the applicable headings.

Color	Circuit
Red	Secondary
Green	Primary and Delivery
Yellow	Parking Brake
Blue	Suspension
Black	Accessory
White	Entrance Door

7.1 Tubing and Hoses

7.1.1 Copper Tubing

Annealed copper tubing with three-piece compression type fittings are used in the engine compartment where non-flexible hoses are required, but must be heat resistant. Connections should be checked for leakage at least every 6,250 miles (10 000 km), and tightened or replaced if necessary. When replacing copper tubing, the tubing must be free of burrs, copper cuttings, and dirt. Blow out tubing with compressed air. Any of the above-mentioned particles will destroy sealing seats in air control units. New tubing must be the same size as the old one.

Always use new tubing ring when replacing tubing. When tightening tube connector nuts, tighten to the specified torque to ensure an airtight connection (refer to paragraph "19. FITTING TIGHTENING TORQUES" at the end of this section). Overtightening will cause leakage. Apply SAE 10 oil or spray white grease (Prévost # 680343) to ball sleeves, tubes, and male threads, then torque to the minimum value and check for leaks. If leaking occurs, back off tube nut about 1/2 turn and retorque to a higher than minimum value.

7.1.2 Nylon Tubing

Nylon tubing is used for air lines in areas where usage of this material is suitable. Nylon tubing is flexible, durable, and weather resistant. When replacing an air line, use nylon tubing only where it has been used previously. Teflon-braided stainless steel hoses used in the engine compartment must be replaced only with similar hoses.

Caution: *Nylon air lines should be used to replace existing nylon lines only, and must comply with the color identification code to ease pneumatic system troubleshooting.*

Nylon air lines must never be routed in areas where temperature could exceed 200 °F (93 °C).

7.1.3 Flexible Hoses

A flexible hose is used normally where it is impractical to use copper or nylon tubing due to constant flexing during operation, such as brake chamber hoses or belt tensioner air cylinder hoses. Hose connections should be tested for leakage at least every 6,250 miles (10 000 km), and tightened or replaced if necessary. Any hose which is chafed, worn or kinked should be replaced.

7.2 Air Line Serviceability Test

7.2.1 Operating Test

If any trouble symptom such as slow brake application or slow brake release indicates a restricted or clogged air line, disconnect the

suspected tube or hose at both ends and blow through it to clear the passage. Inspect tubing and hose for partial restriction that may be caused by dents or kinks. If such a condition is found, the tubing or hose should be replaced.

7.2.2 Leakage Test

With air system fully charged and the brakes applied, coat all tubing and hose connections with a soapy solution to check for air leakage. No leakage is permitted. Leakage can sometimes be corrected by tightening the connection. If this fails to correct the leakage, new fittings, nylon tubing, copper tubing, teflon-braided stainless steel and flexible hoses must be installed as applicable.

7.3 Maintenance

Inspect all lines for cuts, swelling, kinks or other damage or deterioration. Check for lines being pinched by other components. Retaining clips and ties must be in place. Any support or bracket should be in good condition and mounted firmly in position. Hose spring guards should be in usable condition and not distorted. Particular attention should be given to long lines. Any supporting component (clips, ties, grommets, etc.) must be secured to prevent unnecessary vibrations and eventual loosening of connections. Any leak detected should be attended to. Be sure nylon lines are not near areas of intense heat. Check for any missing grommets or loom material where chafing or cutting may occur. Replace with new material as required. In general, lines should be securely located in position and free from any binding condition which would hinder air flow.

8. PRESSURE REGULATING VALVES

8.1 Description

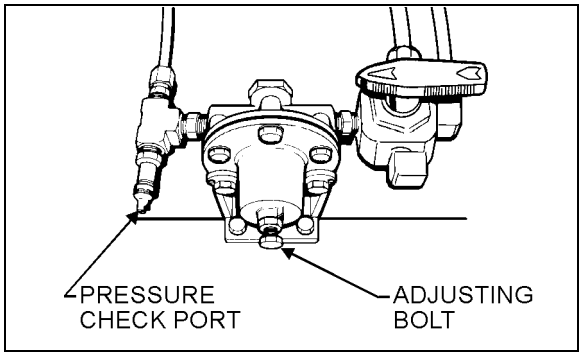

FIGURE 6: AIR PRESSURE REGULATING VALVE 12036

There is one pressure regulating valve for the belt tensioners, and an optional one either for world transmission output retarder or for manual transmission servo-clutch. Refer to figure 6.

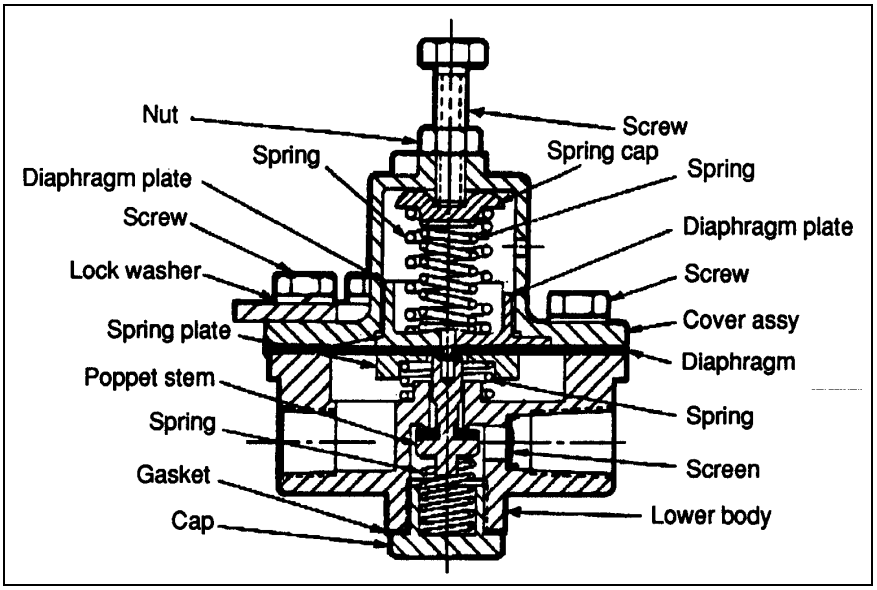

FIGURE 7: AIR PRESSURE REGULATING VALVE 12037

The belt tensioner pressure regulating valve controls pressure in the three belt tensioner cylinders as these latter are parallel mounted. It is located on the structure post at left of the oil reserve tank in engine compartment and is used to limit the air pressure in belt tensioners to 50 ± 2 psi (345 ± 15 kPa).

The optional one is located in engine compartment and is accessible by the service R.H. side door. It could be used for transmission retarder or for servo-clutch. When used with the transmission retarder, it should be adjusted to 80 ± 3 psi (550 ± 20 kPa), and when used with the manual transmission servo-clutch, it should be adjusted to 40 psi (275 kPa).

	Air Pressure (psi)	Air Pressure (kPa)
Belt Tensionner	50 ± 2	345 ± 15
Retarder	80 ± 3	550 ± 20
Servo-Clutch	40	275

8.2 Maintenance

Every 100,000 miles (160 000 km), or annually, disassemble valve and wash all metal parts in a cleaning solvent (Fig. 7). Examine the diaphragm; if cracked, worn or damaged, replace with new diaphragm. If the valve is excessively grooved or pitted, it should be replaced. Replace any other parts that appear worn or damaged. After valve is assembled, adjust the valve to the specified pressure setting and check for air leakage.

8.3 Pressure Setting Procedure

Remove the dust cap from the pressure check port. Attach a pressure gauge at this port and check the pressure reading. If the pressure reading is not correct, it can be adjusted by means of the screw on top of the regulating valve as follows:

1. Loosen the locknut, turn the adjusting screw counterclockwise to decrease pressure approximately 10 psi (70 kPa) below the required pressure.
2. Turn the adjusting screw clockwise to increase the pressure slowly until the required pressure setting is reached. Tighten the locknut.
3. Replace dust cap on the pressure check port.

9. DOOR EMERGENCY RELEASE VALVE

The entrance door of the vehicle is provided with two emergency release valves (one inside and one outside the vehicle), for use in the event of possible malfunction of its main control or failure of its internal components. The interior release valve is located on R.H. side of the driver's HVAC unit access panel, and releases pressure from the lock cylinders. The exterior release valve is located in front service compartment, and also releases pressure from the cylinders (for more information on operation, refer to paragraph *"*7. COACH ENTRANCE DOOR*"* in section 18, *"Body"*). The door emergency release valve should be checked periodically for leakage by applying a soapy solution to the exhaust ports while the valve is closed. Internal leakage will be evident with the appearance of bubbles. If leakage is noted, or valve fails to operate properly, remove and repair, or replace valve.

9.1 Removal and installation

Refer to figure 8 for location of different components.

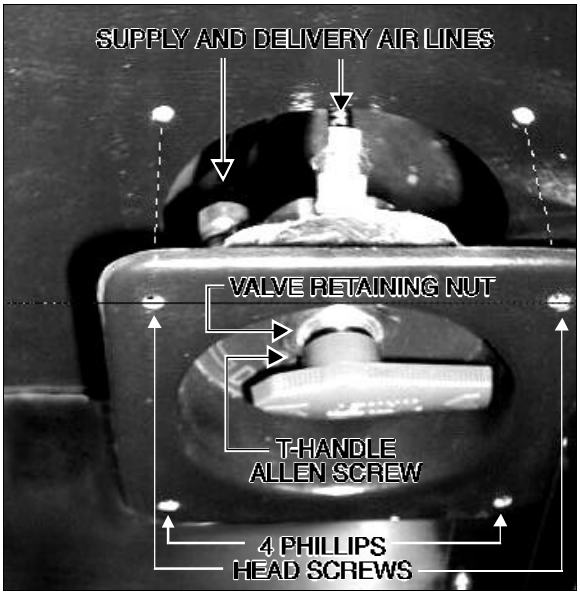

12038

FIGURE 8: R.H. SIDE OF THE DRIVER'S HVAC UNIT ACCESS PANEL

1. Remove the valve T-handle allen screw.
2. Remove the four phillips head screws attaching the emergency release valve plate (interior release valve only).
3. Remove the valve retaining nut.
4. Disconnect the supply and delivery air lines from valve.
5. Repair or replace valve as necessary.

To install, reverse removal procedure.

10. AIR SYSTEM COMPONENTS

10.1 Air Compressor (TU-FLO 750)

The air compressor is located on starter side of engine, on the rear of the engine gear case. The function of the compressor is to provide and maintain air under pressure to operate devices in brake and air systems.

This air compressor also drives the engine fuel pump which is bolted to the rear end of the compressor.

The air compressor is water cooled. Engine coolant is fed to the compressor through a flexible hose tapped into the block water jacket and connected to the rear of the compressor. Coolant returns from the right of the compressor (governor side) through a flexible hose to the engine cylinder head. The compressor air inlet is taken from the air intake manifold and entered in the back of the compressor.

The compressed air is pushed in the discharge line located on top of the compressor, which is dispatching air to the air dryer. Lubricating oil is supplied to the compressor by a line from the cylinder block oil gallery that connects to the air compressor. Lubricating oil returns to the engine crankcase through the air compressor drive assembly.

Maintenance and repair information on the TU-FLO 750 air compressor is supplied in the applicable booklet annexed to this section under reference number SD-01-344.

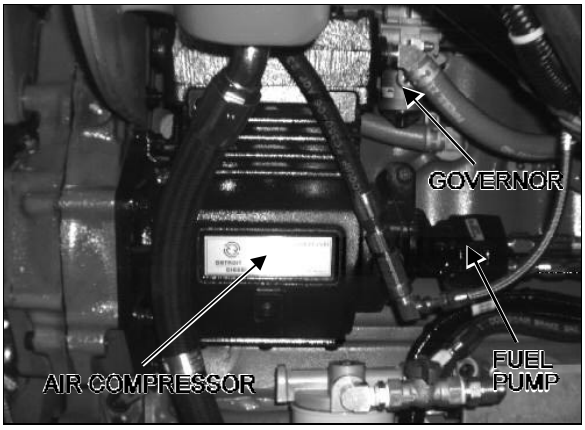

FIGURE 9: AIR COMPRESSOR AND GOVERNOR 12068

10.1.1 Removal and Installation

1. Exhaust compressed air from air system by opening the drain valve of each air tank.
2. Drain the engine cooling system. See Section 5: "*Cooling System*".
3. Identify and disconnect all air, coolant and oil lines from the compressor and governor assembly.
4. Gain access to the compressor by the engine R.H. side compartment. Remove the four compressor mounting bolts, and the two fuel pump support bracket bolts.
5. Slide air compressor rearward to disengage the hub from coupling. Remove the air compressor.

Reverse removal procedure for installation.

10.2 Governor (D-2)

The governor is mounted on the air compressor (Fig. 9), its function is to maintain the system pressure between a minimum and a maximum value. Maintenance and repair information on D-2 governor is supplied in the applicable booklet annexed to this section under reference number SD-01-16.

10.3 Push-Pull Control Valve (PP-1)

A push-pull control valve mounted on the R.H. lateral console is provided for parking brake application or release. The spring brakes are self-actuated whenever the control valve supply pressure drops below 40 psi (275 kPa). Maintenance and repair information on this valve is supplied in the applicable booklet annexed to this section under reference number SD-03-61.

10.4 Flip-Flop Control Valve (TW-1)

A flip-flop control valve mounted on the R.H. lateral console is provided to unload tag axle air springs (and to lift tag axle if vehicle is so equipped) and low-buoy system. It is a manually operated "ON-OFF" valve. Maintenance and repair information on this valve is supplied in the applicable booklet annexed to this section under reference number SD-03-64.

10.5 Horn Valve (HV-3)

The horn valve is a simple "ON-OFF" non-exhausting valve, designed specifically for controlling air horn. The horn valve is designed to return to the off position when application force is removed from it.

10.6 Dual Brake Application Valve (E-15)

The E-15 dual brake valve is floor mounted, treadle operated type brake valve with two separate supply and delivery circuits.

10.6.1 Brake Pedal Adjustment

After brake pedal replacement or repair, adjust the pedal to its proper position according to the following procedure:

Replace the linkage, loosen threaded rod locknuts, and screw or unscrew the threaded adjustment rod in order to obtain a brake pedal inclination corresponding to 45° (Fig. 10). Tighten threaded rod locknuts.

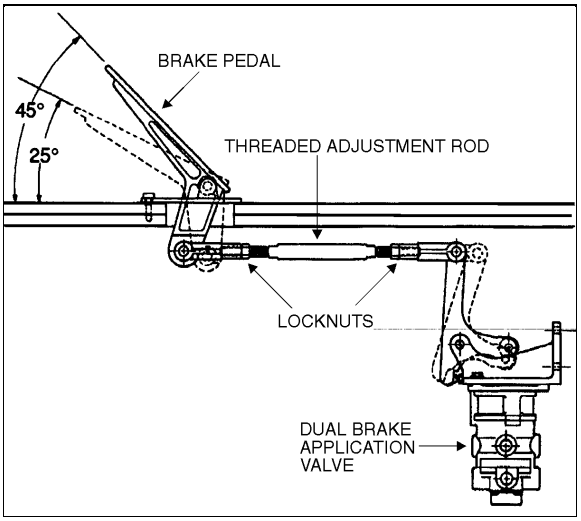

FIGURE 10: BRAKE PEDAL ADJUSTMENT 12040

10.6.2 Maintenance

Maintenance and repair information on the E-15 dual brake application valve is supplied in the applicable booklet annexed to this section under reference number SD-03-826.

10.7 Stoplight Switches

Two electro-pneumatic stoplight switches are mounted on the dual brake application valve (E-15). The upper one is used for the primary air circuit while the lower one is used for the secondary air circuit. Both switches are connected in parallel and have the same purpose, i.e. completing the electrical circuit and lighting the stoplights when a brake application is made. The upper switch is designed to close its contact between 2 psi and 4 psi (14 kPa to 28 kPa), while the lower one closes its contact at 4 psi (28 kPa). The switches are not a serviceable item; if found defective, the complete unit must be replaced.

10.8 Brake Relay Valve (R-12)

Three brake relay valves are provided on this vehicle; one is mounted on the drive axle service brake air line, while the other two are mounted on the tag axle service brake air line and act as interlock valves. Maintenance and repair information on these valves is supplied in the applicable booklet annexed to this section under reference number SD-03-31.

10.9 Quick Release Valves (QR-1)

Two quick release valves are provided on this vehicle. One is mounted on the front axle service brake air line, while the other is mounted on the drive axle emergency brake air line. They are responsible for the rapid exhaust of air pressure from brakes, thus decreasing the brake release time. Maintenance and repair information on these valves is supplied in the applicable booklet annexed to this section under reference number SD-03-69.

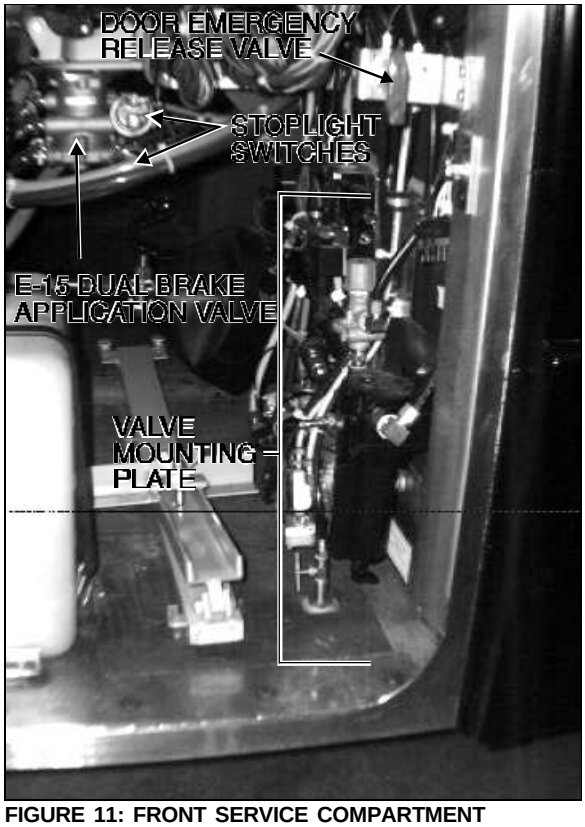

FIGURE 11: FRONT SERVICE COMPARTMENT
12041

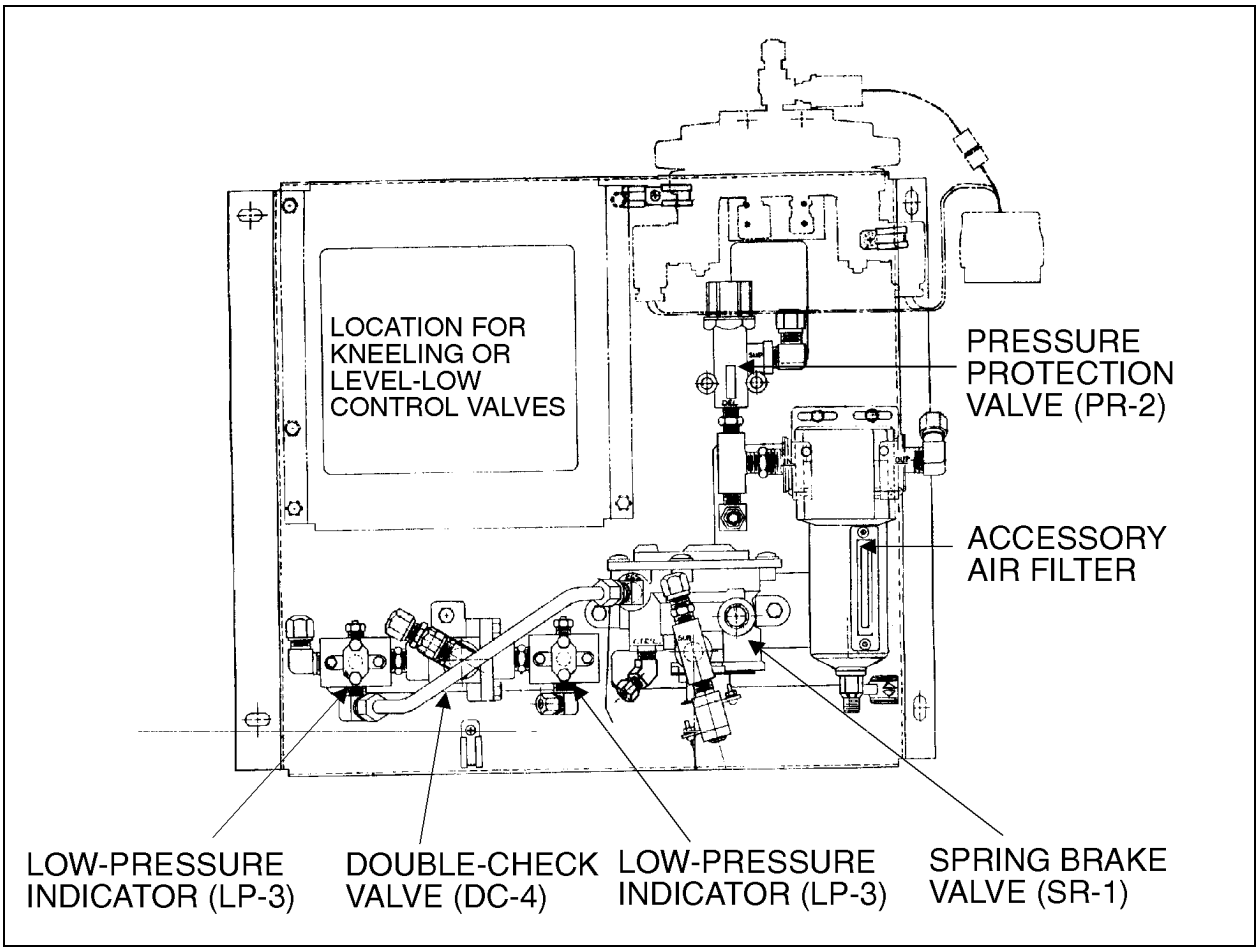

FIGURE 12: VALVE MOUNTING PLATE 12042

10.10 Spring Brake Valve (SR-1)

This valve is installed on the valve mounting plate, which is located on the R.H. side in the front service compartment (For location, see figure 11, and figure 12 for details). The function of the SR-1 is to modulate the spring brake through application of the foot brake valve in the event of loss of service brake pressure. Maintenance and repair information on the spring brake valve is supplied in the applicable booklet annexed to this section under reference number SD-03-87.

10.11 Pressure Protection Valve (PR-2)

Maintenance and repair information on the pressure protection valve is supplied in the applicable booklet annexed to this section under reference number SD-03-55. This valve is installed on the valve mounting plate, which is located on the R.H. side in the front service compartment (see figure 11 for location, and figure 12 for details). The primary function of this valve is to protect the main air system by ensuring that a sufficient air pressure is in the main system at all times (i.e. air delivered to the accessories will be shut off in case of a decrease in pressure). This valve remains closed until a preset pressure is reached (approximately 60 psi (415 kPa)). It then opens and passes air out the delivery port.

10.12 Low Pressure Indicators (LP-3)

Maintenance and repair information on the low pressure indicators is supplied in the applicable booklet annexed to this section under reference number SD-06-2. These switches are installed on the valve mounting plate, which is located on the R.H. side in the front service compartment (For location, see figure 11, and figure 12 for details). These pressure sensitive electro-pneumatic switches are designed to give an automatic warning to the driver in the event that air pressure in the service brake system is below 66 ± 6 psi (455 ± 40 kPa). It activates a dash mounted light and buzzer.

10.13 Shuttle-Type Double Check Valve (DC-4)

Maintenance and repair information on the shuttle-type double check valve is supplied in the applicable booklet annexed to this section under reference number SD-03-67. This valve is installed on the valve mounting plate, which is located on the R.H. side in the front service compartment (For location, see figure 11, and figure 12 for details).

11. AIR SYSTEM TROUBLESHOOTING

The following list has been designed to help in troubleshooting some of the most common problems in the air system and their main causes. (For air brake troubleshooting, refer to paragraph : "15. AIR BRAKE TROUBLESHOOTING" later in this section. For other troubleshooting, refer to the manufacturer's brochures annexed to this section.)

1. **Air pressure doesn't rise to, or doesn't maintain, a normal setting**
   - Defective air gauge (registering incorrectly)
   - Excessive leaking in air system
   - Reservoir drain cock open
   - Governor poorly adjusted or defective
   - Defective compressor
   - Worn compressor or excessive wear on piston and/or ring
2. **Air pressure rises to normal setting too slowly**
   - Excessive leaking in air system
   - Clogged engine air cleaner
   - Worn compressor or excessive wear on piston and/or ring
   - Engine speed too low
3. **Air pressure rises above a normal setting**
   - Defective air gauge (registering incorrectly)
   - Governor poorly adjusted or defective
   - Restriction in line between governor and compressor unloading mechanism
4. **Air pressure drops quickly when engine is stopped**
   - Leaks in compressor discharge valve
   - Leaks in governor
   - Leaks in air lines
   - Leaks in air system valves

12. BRAKE OPERATION

The vehicle braking system uses both service and parking air-operated brakes. The air system is divided into two (2) independent circuits to isolate the front axle brakes and the rear axle brakes (drive and tag), thus providing safe brake operation in the event that one circuit of the system fails. The primary circuit is connected to the drive and tag axle brakes, while the secondary circuit is connected to the front axle brakes. The tag axle service brakes operate only when the axle is in the normal driving (loaded) position. The spring-type emergency brakes are mounted on the drive axle, and will apply automatically if primary system pressure falls below 40 psi (276 kPa). The optional parking brake override system can cancel the parking brakes, enabling the driver to move the vehicle to a safe parking place. To operate this system, push down and hold the control knob located on the R.H. lateral console (See *"Operator's Manual"* for more details).

Furthermore, the brake application sequence, which is increased by a pneumatic relay valve (R-12), will start with the rear axles and be followed by the front axle, thus providing uniform braking on a slippery surface. The vehicle may also be equipped with an Anti-lock Brake System (ABS), which is detailed later in this section.

13. AIR BRAKES

13.1 Disc Brakes

Knorr-Bremse SB7000 vented-type disc brakes are used on front and tag axles. The front axle discs are actuated by 24 square inch effective area air brake chamber, while on tag axle, the brake chambers have a 16 square inch effective area for service brake and a 16 square inch effective area for emergency/parking brake. The *Knorr-Bremse SB7000* brakes are supplied with automatic clearance (slack) adjusters as standard equipment for easier adjustment. For more information on disc brake components and maintenance, refer to the manufacturer's brochure at the end of this section.

13.1.1 Disc Brake Pads

Brake pads have to be checked on a regular basis depending on the vehicle operation. The remaining thickness of the pads should never be less than 3/32 in (2 mm). To check pad condition without removing the wheel, verify the position of guide bush relatively to guide sleeve (Fig. 13). When guide sleeve is in alignment with guide bush, brake pad thickness has to be checked more precisely with wheel removed. When replacing the brake pads, all four pads on an axle have to be changed at the same time. There is no inner or outer pad, since all pads are the same.

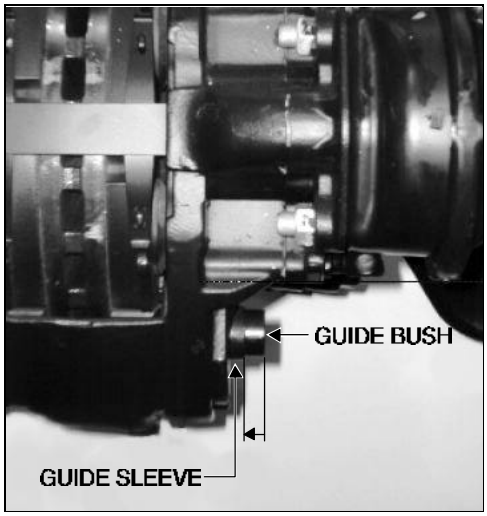

FIGURE 13: LINING WEAR INDICATOR 12043

For information on how to change the brake pads, refer to the manufacturer's brochure, annexed to this section.

Note: *While breaking in new brake pads, avoid long brake applications as well as harsh braking.*

13.2 Drum Brakes

The drive axle is equipped with Cam-Master, W-Series drum brakes from Rockwell. They're actuated by a 30 square inch effective diaphragm area for service brake, and a 36 square inch area for emergency/parking brake. Automatic slack adjusters from *Haldex* are provided as standard equipment with these brakes. For information on installation and adjustment of Automatic slack adjusters, refer to Haldex brochure at the end of this section: *"Automatic Brake Adjusters, Installation and Maintenance"*, and refer to fig. 14.



FIGURE 14: DRUM BRAKE ASSEMBLY 12044

13.2.1 Maintenance

Lubricate brake camshaft bushing every 100,000 miles (160 000 km). Grease one fitting on each drive axle drum brake, with good quality lithium-base grease NLGI no.1 or NLGI no.2. Refer to fig.15 for localization of fitting. Lubricate brake spider, camshaft splines, anchor pins and shoe rollers when necessary.

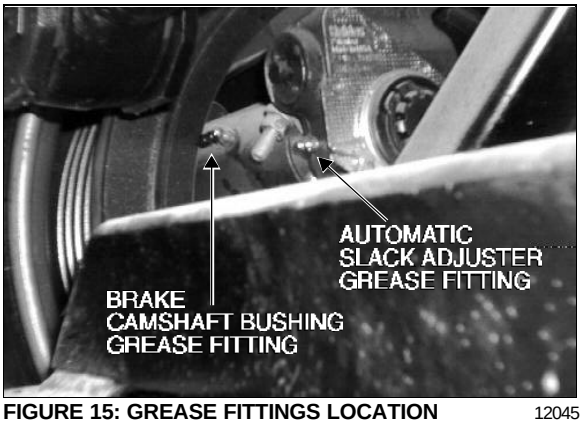

FIGURE 15: GREASE FITTINGS LOCATION 12045

Check brake drums periodically for cracks, severe heat checking, heat spotting, scoring, pitting and distortion. Replace damaged drums. Measure the inside diameter of the drum in several locations with a drum caliper or inside micrometer. Replace the drum if the diameter exceeds the specifications marked on the drum (Fig. 16). For more information on brake drums maintenance, refer to Rockwell's brochure *"Field Maintenance Manual Number 23B - Bus and Coach Brakes", annexed to this section*.

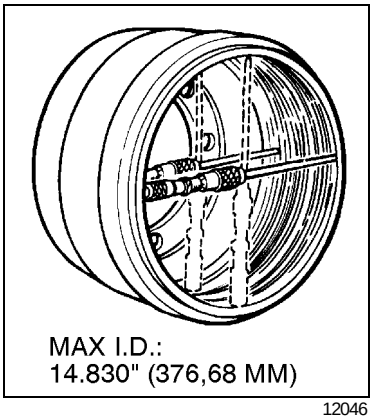

12046

FIGURE 16: DRUM BRAKE (INSIDE DIAMETER)

Caution: *Prévost does not recommend the turning or reboring of the brake drums because it decreases the strength and heat capacity of the drum. However, if drums must be refaced, the new diameter MUST NOT exceed the maximum inside diameter marked on the drum.*

Grease one fitting on each automatic slack adjuster every 6,250 miles (10 000 km), refer to figure 15 for localization. For more information on maintenance of Haldex's automatic slack adjusters, refer to Haldex brochure at the end of this section: *"Automatic Brake Adjusters, Installation and Maintenance"*.

14. RECOMMENDED BRAKE SERVICE PROCEDURES TO REDUCE EXPOSURE TO NON-ASBESTOS FIBER DUST

Most recently manufactured brake linings no longer contain asbestos fibers. Instead of asbestos, these linings contain a variety of

ingredients, including glass fibers, mineral wool, aramid fibers, ceramic fibers, and carbon fibers. At present, OSHA (Occupational Safety and Health Administration) does not specifically regulate these non-asbestos fibers, except as nuisance dust. Medical experts do not agree about the potential long-term risks from working with and inhaling non-asbestos fibers. Nonetheless some experts think that long-term exposure to some non-asbestos fibers could cause diseases of the lung, including pneumoconiosis, fibrosis, and cancer. Therefore, lining suppliers recommend that workers use caution to avoid creating and breathing dust when working on brakes that contain non-asbestos fibers.

Warning:

1. Whenever possible, work on brakes in a separate area away from other operations.

2. Always wear a respirator approved by NIOSH (National Institute of Occupational Safety and Health) or MSHA (Mine Safety and Health Administration) during all brake service procedures. Wear the respirator from removal of the wheels through assembly.

3. NEVER use compressed air or dry brushing to clean brake parts or assemblies. OSHA recommends that you use cylinders that enclose the brake. These cylinders have vacuums with high efficiency (HEPA (Health and Environment Protection Agency)) filters and workmans' arm sleeves. But, if such equipment is not available, carefully clean parts and assemblies in the open air.

4. Clean brake parts and assemblies in the open air. During disassembly, carefully place all parts on the floor to avoid getting dust into the air. Use an industrial vacuum cleaner with an HEPA filter system to clean dust from the brake drums, backing plates and other brake parts. After using the vacuum, remove any remaining dust with a rag soaked in water and wrung until nearly dry.

5. Grinding or machining brake linings. If you must grind or machine brake linings, take additional precautions because contact with fiber dust is higher during these operations. In addition to wearing an approved respirator, do such work in an area with exhaust ventilation.

6. Cleaning the work area. NEVER use compressed air or dry sweeping to clean the work area. Use an industrial vacuum with an HEPA filter and rags soaked in water and wrung until nearly dry. Dispose of used rags with care to avoid getting dust into the air. Use an approved respirator when emptying vacuum cleaners and handling used rags.

7. Worker clean-up. Wash your hands before eating, drinking or smoking. Do not wear your work clothes home. Vacuum your work clothes after use and then launder them separately, without shaking, to prevent fiber dust from getting into the air.

8. Material safety data sheets on this product, as required by OSHA, are available from Rockwell.

15. AIR BRAKE TROUBLESHOOTING

The following tests and check lists have been designed to identify the cause(s) of a sluggish performance and/or leaks in the system. These tests require very little time to perform, and give you a general idea of the system condition. Each test is provided with a corresponding check list, that will guide you to the most common causes of problems.

Prior to performing any test, check all air lines for kinks or dents, and hoses for signs of wear, drying out or overheating.

Warning: *When working on or around brake system and its related components, the following precautions should be observed.*

1. Always block vehicle wheels. Stop engine when working under a vehicle. Keep hands away from chamber push rods and slack adjusters as they may apply when system pressure drops.

2. Never connect or disconnect a hose or line containing air pressure. It may whip as air escapes. Never remove a component or pipe plug unless you are sure all system pressure has been depleted.

3. Never exceed recommended air pressure and always wear safety glasses when working with air pressure. Never look into air jets or direct them at anyone.

4. Never attempt to disassemble a component until you have read and understood the recommended procedures. Some components contain powerful springs and injury can result if not properly disassembled. Use only proper tools and observe all precautions pertaining to the use of those tools.

5. Always clean connecting piping and/or fittings, and coat pipe threads with teflon pipe sealant before installing any air brake system component.

15.1 Pressure Build-up / Low Pressure Warning / Cutoff Point / Governor Cutout

CONDITION: Vehicle parked, wheels chocked

1. Completely drain air reservoirs.
2. Start engine and run at fast idle. Low pressure warning lights should be *"On"*.
3. Start checking pressure at 50 psi (344 kPa).
4. Low pressure warning lights and buzzer should go off at or above 60 psi (415 kPa).
5. At 85 psi (586 kPa), run engine at full rpm, then check that build up time to 100 psi (690 kPa) is 30 seconds or less.
6. Governor cutout. Cuts out at the correct pressure of 120-125 psi (826-861 kPa).
7. Governor cut-in. Reduce service air pressure to governor cut-in. The difference between cut-in and cut-out pressures should not exceed 25 psi (172 kPa).

For common corrections, refer to the following check list.

15.1.1 High or Low Warning Cutoff Point

1. Check dash gauge with an accurate test gauge.
2. Repair or replace the defective low pressure indicator switches.
3. Repair or replace buzzer or light bulb, and check wiring.

15.1.2 High or Low Governor Cutout Point

1. Check dash gauge with an accurate test gauge.
2. Adjust governor to desired cutout.

OR

3. Repair or replace governor as necessary after checking that compressor unloader mechanism is operating correctly.

15.1.3 More Than 30 Seconds to Build-up Pressure from 85 to 100 psi (585 - 690 kPa) at Full Engine RPM

1. Check air gauges on the dashboard with an accurate test gauge.
2. If compressor strainer or inlet line is restricted, clean or replace element or faulty line.
3. If compressor head or discharge line is carbonized or otherwise restricted, clean or replace.
4. If discharge valves are leaking, pull head and correct or replace cylinder head.
5. If drive is slipping, change gear as indicated.
6. If inlet valves are stuck, open or leaking severely, replace unloader kit, inlet valves and/or seats as necessary.
7. If drain cock is found open, close it.
8. If governor leaks when *"unloaded"*, clean or replace inlet valve or replace governor.
9. Listen for air leaks and repair.

Retest to check all items repaired or replaced.

15.2 Air Supply Reservoir Leakage

CONDITION: Full pressure, engine stopped, parking brake applied

1. Allow at least 1 minute for pressure to stabilize.
2. Stop engine, then check air pressure gauge for 2 minutes, and note any pressure drop.

3. Pressure drop should not be more than 3 psi (20 kPa) per minute.

For common corrections, refer to the following check list.

15.2.1 Excessive Air Loss:

1. With the primary air system at normal operating pressure (95 - 125 psi (655 - 860 kPa)), coat all air line connections and pneumatic components with a water and soap solution. Bubbles will indicate an air leak, and none should be permissible. Repair or replace defective parts.
2. Listen for leaks and correct as required.

Retest to check all items repaired or replaced.

15.3 Air Brake Leakage

CONDITION: Full pressure, engine stopped, parking brake released

1. Apply foot brake, allow at least 1 minute for pressure to stabilize.
2. Hold down foot valve for 2 minutes while observing air pressure gauge on the dash-board.
3. Pressure drop should not be more than 4 psi (27 kPa) per minute.

For common corrections, refer to the following check list.

15.3.1 Excessive Leakage on Brake Service Side:

1. With the primary air system at normal operating pressure (95 - 125 psi (655 - 860 kPa)) and foot brake applied, coat all air line connections and brake pneumatic components with a water and soap solution. Bubbles will indicate an air leak, and none should be permissible. Repair or replace defective parts.
2. Listen for leaks and correct as required.

Retest to check all items repaired or replaced.

16. BRAKE AIR CHAMBER

16.1 Description

This vehicle is equipped with "Anchorlock" brake chambers on drive axle, used as a service brake chamber, an emergency brake in case of air pressure loss and a spring-applied parking brake. It consists of two separate air chambers, each having its own diaphragm and push rod. Refer to figures 17 and 18.

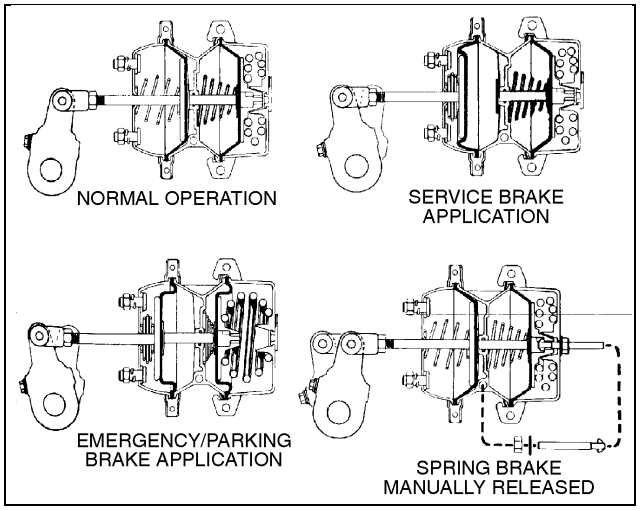

FIGURE 17: BRAKE AIR CHAMBERS OPERATION 12047

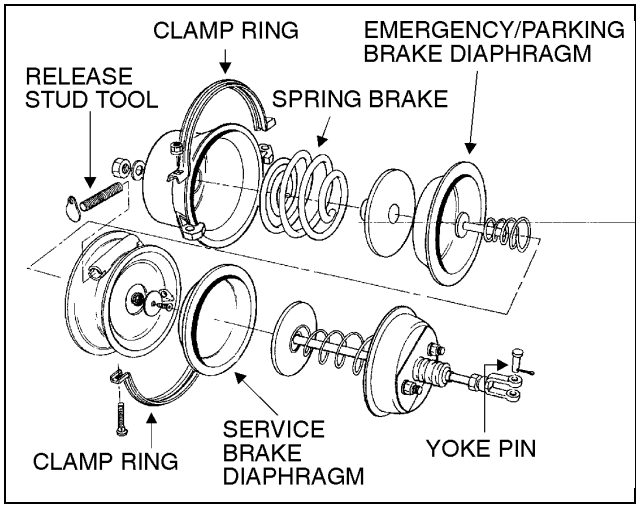

FIGURE 18: BRAKE AIR CHAMBERS ASSEMBLY 12048

The front and tag axles are equipped with "Knorr-Bremse" brake chambers, used for service brake on front axle (Fig. 19) and for service and emergency/parking brake on tag axle (Fig. 20).



FIGURE 19: FRONT AXLE BRAKE AIR CHAMBER 12049

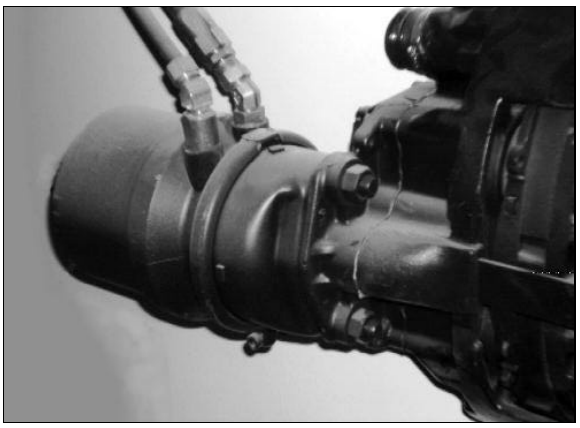

FIGURE 20: TAG AXLE BRAKE AIR CHAMBER 12050

16.2 Maintenance

16.2.1 Every 6,250 Miles (10 000 km) Depending on Type of Operation

1. Apply brakes and observe that the push rods move out promptly without binding.
2. Release brakes, and observe that the push rods return promptly and without binding to the released position.
3. Check tightness of mounting nuts. Check that cotter pins are in place.
4. Check all hoses and lines. They should be secure and in good condition.

16.2.2 Every Two Years or After 100,000 Miles (160 000 km) Depending on Type of Operation

1. Disassemble and clean all parts.
2. Install new diaphragm or any other part if worn or deteriorated.

Note: *When the diaphragm, spring, or both are replaced, they should be replaced with the corresponding chamber on the same axle.*

16.2.3 Airtightness Test

1. Make and hold a full brake application.
2. Coat clamping ring(s) with a soapy solution. If leakage is detected, tighten clamping ring only enough to stop leakage. ***Do not overtighten*** as this can distort sealing surface or clamping ring. Coat area around push rod hole (loosen boot if necessary). No leakage is permitted. If leakage is detected, the diaphragm must be replaced.

16.3 Emergency/Parking Brake Manual Release

Warning: *Never stand in the axis line of the spring brake chambers, especially when caging the spring.*

16.3.1 Drive Axle

1. Block the wheels to prevent the vehicle from moving.
2. Remove the release stud tool from its storage place on drive axle brake air chamber.
3. Remove the access plug from the end of the spring chamber, then insert the release stud through the opening. Turn the release stud 1/4 turn (clockwise) to anchor it into the spring plate. Install the flat washer and nut, then turn the nut clockwise to cage the spring. Repeat on the opposite side.

Warning: *Make sure the release stud is properly anchored in spring plate receptacle prior to caging the spring.*

4. To manually reset the emergency/parking brake, turn the nut counterclockwise. Rein-

stall access plugs on the spring chambers and release stud tools in their storage places.

16.3.2 Tag Axle

1. Block the wheels to prevent the vehicle from moving.
2. Turn the release bolt counterclockwise to cage the power spring (approximately 2.5 inches (6 cm)). Repeat on the opposite side.
3. To manually reset the emergency/parking brake, turn the bolt clockwise.

16.4 Removal, Installation and Disassembly

16.4.1 Removal

Warning: *To prevent personal injuries, brakes should be inoperative prior to working on any of their components.*

1. Block the wheels to prevent the vehicle from moving.
2. Safely support vehicle at the recommended body jacking points.

To gain access to a given brake air chamber, the corresponding wheel can be removed (refer to Section 13: *"Wheels, Hubs and Tires"*).

3. Exhaust compressed air from air system by opening the drain valve of each reservoir.
4. For the drive and tag axles brake chambers, manually release spring brakes (refer to paragraph "16.3 EMERGENCY/PARKING BRAKE MANUAL RELEASE" procedure).
5. Disconnect air line(s) from brake chamber.
6. On drive axle, remove the yoke pin connecting brake chamber and slack adjuster.
7. Unbolt and remove the brake chamber from vehicle.

16.4.2 Installation

Reverse removal procedure, then check brake adjustment.

Caution: *Always clean air lines and fittings, and coat pipe threads with teflon pipe sealant before reconnecting air lines.*

Caution: *On Knorr-Bremse air chamber (front and tag axles), do not use molybdenumsulphite combined grease. Use brake chamber with inner sealing, and ensure that the o-ring is in the correct position between the brake caliper and brake chamber.*

16.4.3 Disassembly

Warning: *Spring brake chambers (drive and tag axles) contain an extremely high compressive force spring, which can possibly cause serious injury if special precautions are not taken when working around this area. To avoid such injury, the following recommendations must be applied:*

1. Prévost recommends the installation of a new spring brake chamber if it is found to be defective.

2. Spring brake chamber maintenance and/or repair must be performed by trained and qualified personnel only.

3. Before manually releasing spring brakes, visually check spring brake for cracks and/or corrosion.

4. On "Anchorlock" brake chambers (drive axle), make sure the release stud is properly anchored in spring plate receptacle prior to caging the spring.

5. Never stand in the axis line of the spring brake chambers, especially when caging the spring.

Warning: *To prevent personal injury, brakes should be inoperative prior to working on any components.*

1. Block the wheels to prevent the vehicle from moving.
2. Safely support vehicle at the recommended body jacking points.

To gain access to a given brake air chamber, the corresponding wheel can be removed (refer to Section 13: *"Wheels, Hubs and Tires"*).

3. Exhaust compressed air from air system by opening the drain valve of each reservoir.

4. For the drive and tag axles brake chambers, manually release spring brakes (refer to paragraph "16.3 EMERGENCY/PARKING BRAKE MANUAL RELEASE" procedure).
5. Remove clamp ring, and remove and discard the existing diaphragm. Install the new diaphragm squarely on body.
6. Reverse the procedure for assembly. Tap clamp ring to ensure proper seating. Check for proper operation before placing vehicle in service.

17. ANTI-LOCK BRAKING SYSTEM (ABS)

17.1 Description

This device has been designed to ensure stability and steerability of vehicle during braking, and to minimize its stopping distance whatever the road conditions are. On slippery roads and generally in emergency situations, overbraking frequently induces wheel locking. The anti-lock braking system provides maximum braking performance while maintaining adequate steerability on slippery roads.

The ABS continuously monitors the wheel behaviour during braking. Sensors on each wheel of front and drive axles transmit data to a four channel electronic processor which senses when any wheel is about to lock. Modulator valves quickly adjust the brake pressure (up to 5 times per second) to prevent wheel locking. Each wheel is therefore controlled according to the grip available between its tire and the road.

With this device, the vehicle is brought to a halt in the shortest possible time, while remaining stable and under the driver's control.

Since the vehicle braking system has dual circuits, the ABS is also provided with a secondary system should a fault develop in the ABS. Anti-lock systems are fail safe. Should the system cut out due to a malfunction, the braking system reverts to normal non anti-lock controlled operation. But since ABS consists of two diagonally related circuits, only the half system which has sustained damage or other fault is switched off (i.e. wheels return to normal non-ABS braking). The other diagonal half remains under full ABS control.

Note: *ABS is active on service brake, transmission retarder, Jake brake, but is inactive on emergency/parking brake.*

17.2 Troubleshooting and Testing

For troubleshooting and testing of the vehicle's anti-lock braking system, refer to *"Maintenance Manual No. 28: Anti-Lock Brake Systems For Trucks, Tractors and Buses"*, at the end of this section.

18. ABS COMPONENTS

The main components of the ABS system are listed hereafter. Refer to each component for its specific function in the system and its maintenance.

18.1 Electronic Control Unit

18.1.1 Description

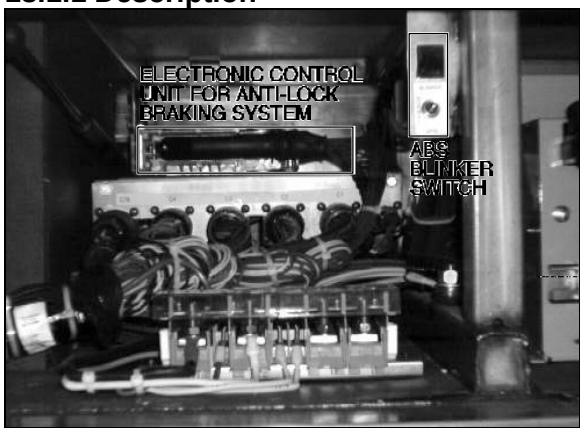

FIGURE 21: FRONT ELECTRIC COMPARTMENT 12051

This control unit is located in the front electric compartment (refer to figure 21 for location of E.C.U. and blinker switch). According to the data transmitted by the sensors (number of pulses/sec is proportional to the speed of each wheel), the electronic control unit determines which wheel is accelerating or decelerating. It then establishes a reference speed (average speed) from each wheel data, and compares

the speed of each wheel with this reference speed to determine which wheel is accelerating or decelerating.

As soon as wheel deceleration or wheel slip threshold values are exceeded, the electronic control unit signals a solenoid control valve to limit the excessive brake pressure produced by the driver in the brake chamber.

18.1.2 Welding Procedures

The following precautions are to be taken to protect the electronic control components. Refer to Section 1, paragraph "8. WELDING PRECAUTION" in this manual.

18.2 ABS Modulator Valve

18.2.1 Description

This ABS system is equipped with four modulator valves, located between the brake chamber and the relay valve or quick release valve. Note that there is only one solenoid valve controlling the drive and tag axle wheels on the same side. This is an "ON/OFF" type valve, i.e., at brake application, the valve exhausts air from the brake chamber when the electronic unit senses that the corresponding wheel speed decreases according to the other wheels.

18.2.2 Maintenance

Like the electronic control unit, no specific maintenance is required for the solenoid control valve.

18.3 Sensors

18.3.1 Description

The sensors are mounted on the front and drive axle wheel hubs. The inductive sensors consist essentially of a permanent magnet with a round pole pin and a coil. The rotation of the toothed wheel alters the magnetic flux picked up by the coil, producing an alternating voltage, the frequency of which is proportional to the wheel speed. When wheel speed has a tendency to decrease due to the braking coefficient, the magnetic flux produced and sensed afterwards by the electronic control unit will be decreased. Consequently, the electronic control unit will command the solenoid control valve to decrease the pressure at the corresponding brake chamber.

18.3.2 Maintenance

No specific maintenance is required for sensors, except if the sensors have to be removed for axle servicing. In such a case, sensors should be lubricated with a special grease before their reinstallation. Refer to paragraph "18.3.3 INSTALLATION" for details.

Note: *The resistance value, when sensors are checked as a unit, must be equal to 1,75 Kohms. To check the sensors for proper output voltage after the sensors and toothed wheels have been assembled to the axle, connect a suitable AC voltmeter across the output terminals. With the hubs rotating at 30 rpm, the output voltages should read from 50 to 1999 mV to be acceptable.*

18.3.3 Installation

The following procedure deals with sensor installation on the axle wheel hubs. Read procedure carefully before reinstalling a sensor, as its installation must comply with operational tolerances and specifications.

1. Dip clamping bush into the special grease (Prévost #680460), press clamping bush and insert in the bushing on hub.

Caution: *Use only this type of grease on the sensors.*

2. Install sensor inside the clamping bush. Push on assembly to seat it on the pulse wheel. Ensure mounting is rigid, as it is an important criteria for an adequate sensor operation.

Note: *This installation should be of the "press fit" type.*

18.4 Clamping Bush

18.4.1 Description

The clamping bush retains the sensor in its mounting bracket close to the toothed pulse wheel. The gap between the sensor end and

teeth is set automatically by pushing the sensor in its bush hard up against the pole wheel, and the latter knocks back the sensor to its adjusted position (Fig. 22).

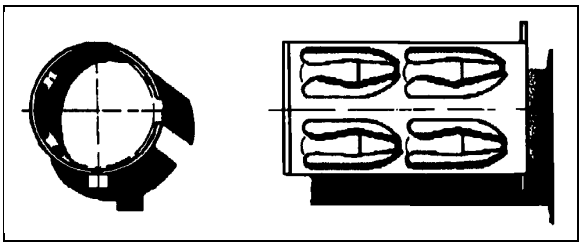

FIGURE 22: CLAMPING BUSH 12052

18.4.2 Maintenance

The clamping bush requires no specific maintenance.

19. FITTING TIGHTENING TORQUES

1. 45° Flare and Inverted Flare: Tighten assembly with a wrench until a solid feeling is encountered. From that point, tighten 1/6 turn (Fig. 23).

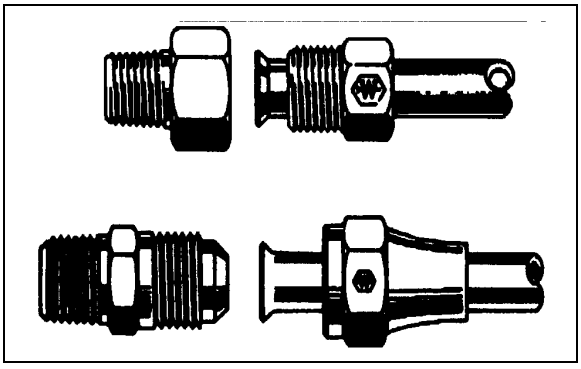

FIGURE 23: HOSE FITTINGS 12053

2. Compression: Tighten nut hand tight. From that point, tighten with a wrench the number of turns indicated in the chart hereafter (Fig. 24).

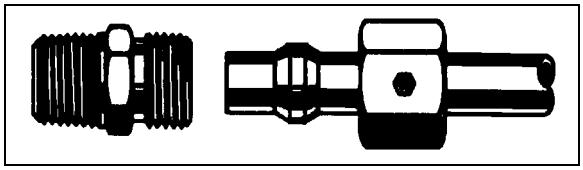

FIGURE 24: HOSE FITTING 12054

Fitting size	Pipe diameter (inch)	Number of additional turns required following manual tightening
2	1/8	1 1/4
3	3/16	1 1/4
4	1/4	1 1/4
5	5/16	1 3/4
6	3/8	2 1/4
8	1/2	2 1/4
10	5/8	2 1/4
12	3/4	2 1/4
16	1	2 1/4

3. NTA-type Plastic Tubing: Tighten nut hand tight. From that point, tighten with a wrench the number of turns indicated in the chart hereafter (Fig. 25).

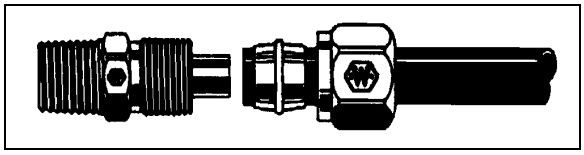

FIGURE 25: HOSE FITTING 12055:

Tubing diameter (inch)	Number of additional turns required following manual tightening
1/4	3
3/8 to 1/2	4
5/8 to 3/4	3 1/2

4. AB-type Copper Piping: Tighten nut hand tight. From that point, tighten with a wrench the number of turns indicated in the chart hereafter (Fig. 26).

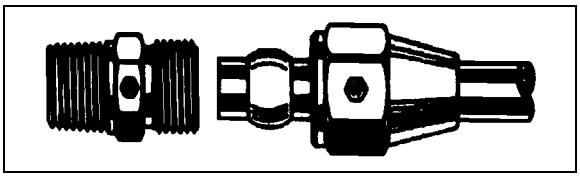

FIGURE 26: HOSE FITTING 12056

Piping diameter (inch)	Number of additional turns required following manual tightening
1/4, 3/8, 1/2	2
5/8, 3/4	3

5. Piping Tightening: All connections must be hand tightened. From that point, tighten a minimum of 2 1/2 additional turns.

20. SPECIFICATIONS

Air Compressor
Make .....Bendix Westinghouse
Model .....Tu-Flo 750
Capacity (at 1250 rpm) 16.5 cfm (0,467 m^3/min)
Supplier number (Bendix) 109426
Supplier number (Detroit Diesel)..... 23516841
Prévost number..... 641362

Governor
Make .....Bendix Westinghouse
Model D-2
Cut-in pressure .....95-105 psi (655-724 kPa)
Cutout pressure .....120-125 psi (827-861 kPa)
Supplier number..... 284358
Prévost number..... 640964

Push-Pull Control Valve (Parking Brakes)
Make .....Bendix Westinghouse
Model PP-1
Automatic release pressure
.....40 psi (275 kPa) nominal
Supplier number..... 287325
Prévost number..... 641128

Flip-Flop Control Valve
Make.....Bendix Westinghouse
Model.....TW-1
Type .....On-Off
Supplier number 229635
Prévost number 640136

Dual Brake Application Valve
Make.....Bendix Westinghouse
Model..... E-15
Supplier number 109174
Prévost number 641257

Stoplight Switches
Make.....Bendix Westinghouse
Model..... SL-5
Contact close (ascending pressure)
.....6 psi (41,4 kPa)
Supplier number 286392
Prévost number 640852

Brake Relay Valves
Make.....Bendix Westinghouse
Model.....R-12H
Supplier number 102852
Prévost number 641088

Quick Release Valve
Make.....Bendix Westinghouse
Model..... QR-1
Supplier number 229859
Prévost number 641014

Spring Brake Valve
Make.....Bendix Westinghouse
Model.....SR-1
Supplier number 286364
Prévost number 640870

Pressure Protection Valve
Make.....Bendix Westinghouse
Model.....PR-2
Nominal closing pressure .....60 psi (415 kPa)
Supplier number 277226
Prévost number 640439

Low Pressure Indicators
Make.....Bendix Westinghouse
Model..... LP-3
Contact close.....66 psi (455 kPa)
Supplier number 288522
Prévost number 640975

Shuttle-Type Double Check Valve
Make .....Bendix Westinghouse
Model DC-4
Supplier number..... 277988
Prévost number..... 641015

Air Dryer
Make ..... Rockell Wabco
Model ..... System Saver 1000
Heater consumption.....100 watts
Supplier number..... RWABK-095
Prévost number..... 641337
Desiccant cartridge kit supplier number
.....R950011
Desiccant cartridge kit Prévost number
..... 641278

Air Pressure Regulator
Make ..... Williams Air Controls
Adjustable output range
.....0-80/85 psi (0-552/586 kPa)
Recommended pressure setting
..... 75 psi (517 kPa)
Supplier number.....WM-279-1
Prévost number..... 640938

Accessory Air Filter
Make .....Norgren
Type..... with manual drain
Supplier number..... F74G-3AN-QD1
Prévost number..... 641338
Filter element
Supplier number..... 4338-04
Prévost number..... 641340
O-ring
Supplier number..... 4380-700
Prévost number..... 641354
Level indicator
Supplier number..... 4380-050
Prévost number..... 641355

Front Axle Brake Chambers
Make .....Knorr Bremse
Type..... 24
Effective diaphragm area24 sq.in. (154,8 sq.cm)
Supplier number.....BS 3517 II/31651
Prévost number..... 641309

Drive Axle Brake Chambers
Make.....Anchorlock division
Type 30-36
Effective diaphragm area
.....30 sq.in (193,5 sq.cm) as service
.....36 sq.in (232,3 sq.cm) as emergency
Supplier number 3036GC164318
Prévost number 641181

Tag Axle Brake Chambers
Make.....Knorr Bremse
Type 16/16
Effective diaphragm area
.....16 sq.in. (103,2 sq.cm) as service
.....16 sq.in. (103,2 sq.cm) as emergency
Supplier number 11/18224/V1-BS9396
Prévost number 641308

Automatic Slack Adjuster (Drive Axle)
Make.....Haldex Corporation
Supplier number 419-10585
Prévost number 621523

Solenoid Control Valve (Anti-Lock Braking System)
Make..... Rockwell Wabco
Voltage ..... 24 V
Supplier number 472 195 006 0
Prévost number 641097

Section 13: WHEELS, HUBS & TIRES

CONTENTS

1. WHEELS AND TIRES 13-3
    1.1 Description 13-3
2. WHEEL MAINTENANCE 13-3
3. SINGLE WHEEL 13-3
    3.1 Removal 13-3
    3.2 Installation 13-4
    3.3 Inspection 13-4
4. DUAL WHEELS 13-4
    4.1 Removal 13-4
        4.1.1 Outer Wheel 13-4
        4.1.2 Inner Wheel 13-4
    4.2 Installation 13-4
        4.2.1 Inner Wheel 13-4
        4.2.2 Outer Wheel 13-4
    4.3 Inspection 13-4
5. CORROSION PROTECTION OF ALUMINUM WHEELS 13-5
6. CHECKING FOR DISTORTED WHEEL ON VEHICLE 13-5
7. WHEEL STUDS 13-6
    7.1 Drive Axle 13-6
    7.2 Front and Tag Axles 13-6
8. SPARE WHEEL AND TIRE (if applicable) 13-6
9. REMOVING SPARE WHEEL AND TIRE FROM COMPARTMENT 13-7
10. SPARE WHEEL AND TIRE MAINTENANCE 13-7
11. FRONT AND TAG AXLE WHEEL HUBS (OIL TYPE WHEEL HUBS) 13-7
    11.1 Hub Bearing Maintenance 13-7
    11.2 Hub Bearing Inspection 13-8
    11.3 To Remove Hub Unit 13-8
    11.4 To Assemble the Hub 13-8
12. DRIVE AXLE WHEEL HUBS 13-8
    12.1 Description 13-8
    12.2 Bearing Adjustment 13-8
    12.3 Disassembly and Repair 13-9
13. TIRE MAINTENANCE 13-9
    13.1 Recommended Tire Inflation Pressure (Cold) 13-10
    13.2 Tire Matching 13-10
    13.3 Wheel and Tire Balancing 13-11
    13.4 Tire Rotation 13-11

LIST OF ILLUSTRATIONS

FIG. 1: TIGHTENING SEQUENCE 13-3
FIG. 2: DUAL WHEEL INSTALLATION 13-4
FIG. 3: SUGGESTED DIAL GAUGE INSTALLATION 13-6
FIG. 4: FRONT BUMPER - H3 COACHES 13-6
FIG. 5: SPARE WHEEL INSTALLATION 13-7
FIG. 6: TIRE INFLATION 13-10

1. WHEELS AND TIRES

1.1 Description

Where the vehicle is provided with stud-mounted wheels, wheel studs and nuts on the left side of the vehicle have left-hand threads whereas those on the right side have right-hand threads. If equipped with hub-mounted wheels, all studs and nuts have right-hand threads. Either disc steel wheels or optional aluminium-polished wheels may be installed on the vehicle. Both are mounted with radial tubeless tires.

Both steel and aluminum wheel dimensions are 22.50 X 9 inches (571.5 X 228.6 mm) for the following recommended tire dimensions (in order of preference):

315/80 R 22.5
12.75 R 22.5
1200 R 22.5

2. WHEEL MAINTENANCE

Wheel maintenance consists of periodic inspections to ensure that wheel nuts are tightened to the proper torque. In the case of a new vehicle, or after a wheel installation, stud nuts should be tightened every 100 miles (160 km) for the first 500 miles (800 km) to allow setting in of clamping surfaces.

Wheel studs and nuts must be kept free from grease and oil. No lubricant whatsoever should be used. Cleanliness of the wheel and its rotor or brake drum mating surfaces is important for proper wheel mounting.

It is also important that wheel stud nuts be tightened alternately on opposite sides of the wheel. Refer to Figure 1 for the suggested tightening sequence.

However, for hub mounted wheels, it is recommended to add some rust protection lubricant on the pilot diameter of the hub (only to facilitate futur removal).

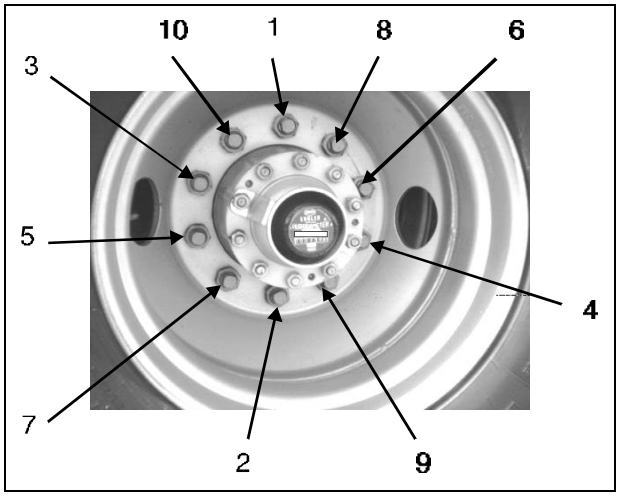

FIGURE 1: TIGHTENING SEQUENCE OEH3B404

3. SINGLE WHEEL

3.1 Removal

1. Stop engine and apply parking brake.

2. Loosen wheel nuts about one turn (do not remove the nuts). (This is not necessary if equipped with hydraulic gun.)

Note: *For stud-mounted wheels, turn nuts counterclockwise for R.H. side and clockwise for the L.H. side. For hub-mounted wheels, turn nuts counterclockwise on both side of the vehicle.*

3. Raise the vehicle by its jacking points on the body. See Section 18, "Body", under heading "16. VEHICLE JACKING POINTS".

4. Unscrew wheel hex stud nuts and remove the wheel.

3.2 Installation

1. Screw in the hex stud nuts (refer to Figure 1 for sequence) so that wheel will position itself concentrically with hub. This is important, otherwise wheel may be eccentric with hub and will not run straight. In this initial step, slightly tighten the nuts to correctly position the wheel.

2. Tighten stud nuts progressively as shown in Figure 1. The final tightening should be done with a torque wrench. Tighten stud nuts to 450 - 500 lbf•ft (610 - 680 N•m) for aluminum as well as steel wheel.

3.3 Inspection

Repeat step 2 in previous paragraph.

4. DUAL WHEELS

4.1 Removal

4.1.1 Outer Wheel

Unscrew the hex stud nuts, using the Single Wheel Removal procedure described previously, paragraph 3.1.

4.1.2 Inner Wheel

1. Unscrew inner cap nuts.

2. Remove inner wheel.

4.2 Installation

4.2.1 Inner Wheel

1. Screw in the inner cap nuts (shown in Fig. 2) and refer to Figure 1 for sequence, so that wheel will position itself concentrically with hub.

2. Tighten inner cap nuts progressively according to sequence shown in Figure 1. The final tightening should be done with a torque wrench. Tighten inner cap nuts to 450 - 500 lbf•ft (610 - 680 N•m) for aluminum as well as steel wheel.

4.2.2 Outer Wheel

Tighten the hex head nuts (shown in Fig. 2) using the single wheel installation procedure described previously.

4.3 Inspection

1. Loosen a hex head nut three turns (Fig. 2).

2. Tighten the inner cap nut to the correct torque (450 - 500 lbf•ft [610 - 680 N•m]).

3. Tighten the hex head nut to the correct torque (450 - 500 lbf•ft [610 - 680 N•m]).

4. Repeat the 3 previous steps for each of the 10 *"hex head nut - inner cap nut* assemblies" according to the tightening sequence in Figure 1.

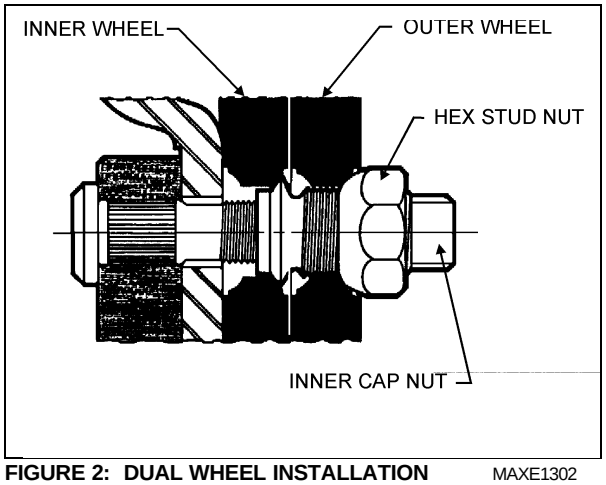

FIGURE 2: DUAL WHEEL INSTALLATION MAXE1302

Caution: *Do not attempt to tighten an inner cap nut without having previously loosened the hex head nut.*

Note: *When mounting rear dual wheels, care should be taken to position the tire valve stems 180 apart to access both inner and outer tire valves.*

5. CORROSION PROTECTION OF ALUMINUM WHEELS

1. Clean wheels often by means of a high pressure water jet. Cleaning may be accelerated with mild soap. Do not use concentrated alkaline cleaning products.

2. When tire is removed, clean and inspect wheel completely. Remove dirt and corrosion on rim by means of a wire brush. Do not use a wire brush on the outer surface of the wheel.

3. The following measures should be taken to maintain original appearance of the aluminum wheels:

- Use a sponge, a soft cloth, or a soft fiber brush, with a mild soap and warm water solution to wash the outer wheel surfaces.
- Rinse thoroughly with clean water.
- Wipe and dry thoroughly to prevent water stains.
- Wax surface with *"Simonize Body Guard"*, *"Dupont 7 New Car Wax"*, or an equivalent product.

Clean aluminum wheels as required to maintain original look.

Warning: *Wheel surfaces may have sharp or cutting edges which may cause injury to the hands. To prevent contact with sharp edges, it is strongly recommended to wear rubber gloves when washing or polishing wheels.*

6. CHECKING FOR DISTORTED WHEEL ON VEHICLE

1. Slightly raise axle to be checked and place a safety support underneath.

2. Check the rim for distortion. Install a dial gauge as shown in Figure 3, then rotate the wheel one full turn. As the wheel turns, note any variation on the dial gauge.

Caution: *Take care not to damage the dial gauge as it may interfere with the balancing weights on the wheel.*

3. The variation should not exceed 0.125 inch (3,2 mm). If the rim is distorted beyond this dimension, the wheel must be replaced.

4. If doubt exists whether wheel or hub is distorted, hub may be checked as follows:
   Replace the existing wheel with a wheel known to be correct. Revolve the wheel and proceed with the previously mentioned tests. If tests are within limits, the hub is satisfactory, but the wheel is distorted.

Caution:NEVER STRAIGHTEN ALUMINUM WHEELS. Never heat aluminum wheels for the purpose of repairing damages incurred after hitting a curb or resulting from other causes. The special alloy in wheels has been heat treated, and any uncontrolled heating could alter the wheel structure. Furthermore, never weld aluminum-forged wheels for any reason whatsoever.

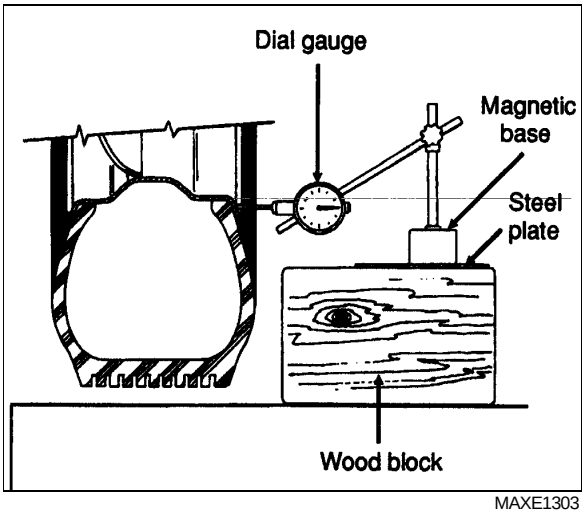

MAXE1303

FIGURE 3: SUGGESTED DIAL GAUGE INSTALLATION

7. WHEEL STUDS

Stripped threads may be the result of excessive torquing, or a result of damage during wheel installation, when placing the wheel over the studs. Where a damaged thread is discovered, the stud must be replaced. Broken studs are a direct result of operating with loose stud nuts or improperly seated wheels. When a broken stud is replaced, the adjacent studs on each side of the broken stud must also be replaced because they could have been subject to excessive strain and may have become fatigued.

When installing wheel studs to hubs, check nuts retaining the wheel stud to wheel hub and if they are deformed, damaged or severely corroded, install new parts. Install nut (and washer where applicable) to new stud and torque to 110 - 130 lbf•ft (150 - 177 N•m) for studs mounted on front and tag axle wheel hubs and torque to 450 - 500 lbf•ft (610 - 680 N•m) for those mounted on drive axle wheel hubs.

7.1 Drive Axle

Wheel can be mounted on the drive axle with studs (3/4"-16 thread) or hub mounted (7/8"-14 thread) and with the inner cap nut (1-1/8"-16 thread).

7.2 Front and Tag Axles

Wheel can be mounted on tag axle with studs (1-1/8"-16 thread) or hub mounted (7/8"-14 thread).

Note: *Wheel studs and nuts must be kept free from grease and oil. No lubricant whatsoever should be used.*

8. SPARE WHEEL AND TIRE (if applicable)

In the case of H3 coaches, the spare wheel and tire are stored in a compartment directly behind the reclining front bumper. Access is reached by unscrewing nuts located at each extremity under the bumper, then by pushing them upwards. Lower bumper slowly as it is quite heavy (Fig. 4).

There is no spare wheel in the case of a converted vehicle. An air shutter is located behind the reclining front bumper. Access is obtained by pressing a latch located in the middle and upper part of the bumper air inlet.



FIGURE 4: FRONT BUMPER - H3 COACHES 18057

Note: *It is recommended that two people perform the above operation.*

Warning:*. This compartment has not been designed for storage. Never leave any loose objects in this area as it may interfere with steering linkage mechanism.*

9. REMOVING SPARE WHEEL AND TIRE FROM COMPARTMENT

To pull out the spare wheel and tire, open reclining bumper according to previous instructions. Loosen and turn buckle of the holding chain to release the wheel and dolly assembly. Open the front service compartment, unscrew the wing nut retaining the support and rail extension assembly, then pull out the assembly. Fix it by matching its two holes to the corresponding mounting pins located in front center of spare tire compartment. Pull out spare wheel using strap as illustrated in Figure 5. Remove tire covering, then separate spare wheel from its dolly by unscrewing the two mounting wing nuts.

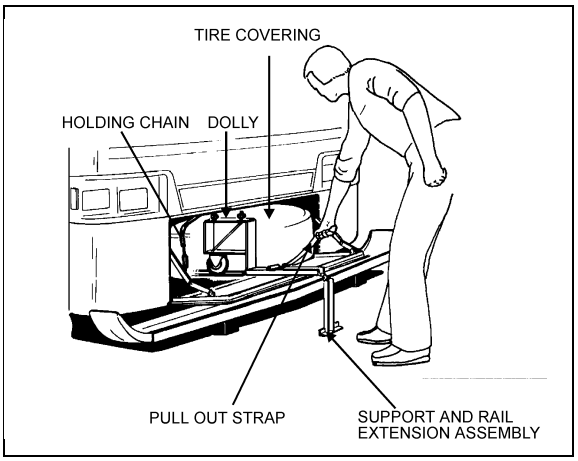

FIGURE 5: SPARE WHEEL INSTALLATION MA3E1304

Note: *Reinstall support and rail extension assembly and fix tire with loading chain before moving vehicle.*

Caution: *Check that the bumper is safely hooked in place, and that retaining nuts are firmly tightened after bumper compartment has been closed.*

Note: *The jack and wheel nut wrench are stored in the right side baggage compartment.*

10. SPARE WHEEL AND TIRE MAINTENANCE

Maintenance of the spare wheel and tire consists in ensuring that tire inflation pressure is the same as the tire on the coach which has the highest inflation pressure (refer to Recommended Tire Inflation Pressure (cold) in this section). Inspect rim to ensure that there is no important corrosion, check if spare wheel cover is in good condition and check that spare tire is securely fastened in compartment.

Caution: *If the spare wheel and tire must be installed, deflate the tire in accordance with recommended pressure.*

11. FRONT AND TAG AXLE WHEEL HUBS (OIL TYPE WHEEL HUBS)

11.1 Hub Bearing Maintenance

The front and tag axle wheel hubs use oil lubrication which eliminates periodic grease repacking of the hubs. A sight glass is provided for convenient check of oil level. Oil level should be checked daily and must be maintained to the level mark in the sight glass. If oil is not visible through the sight glass, general purpose gear lubricant SAE 90 (A.P.I. spec. GL5) must be added by removing the snap plug in center of the hub cap to bring oil to the correct level. To check oil level after vehicle has been driven, wait at least 15 minutes to ensure that oil has settled.

Caution: *Hub oil fill cap is provided with a very small vent hole. Occasionally insert a small tip to avoid hole restriction, as it prevents overpressure in bearing housing.*

11.2 Hub Bearing Inspection

1. An inspection should be made after the first 3,000 miles (4 800 km) and then at intervals of 25,000 miles (40 000 km). When the wheels are raised, they should revolve quite freely without roughness.
2. Hub bearings should have a slight end movement with the limits 0.0005 inch to 0.002 inch when rocked forward and backwards on axle stub. See paragraph "11.4 TO ASSEMBLE THE HUB" in this section.

11.3 To Remove Hub Unit

Refer to "GKN Parts and Service Manual for Axles, Manual No. 1604", Issue A, Section B, annexed to the end of Section 10, "Front Axle".

11.4 To Assemble the Hub

Refer to "GKN Parts and Service Manual for Axles, Manual No. 1604", Issue A, Section B, annexed to the end of Section 10, "Front Axle".

12. DRIVE AXLE WHEEL HUBS

12.1 Description

Drive wheels use a single oil-seal assembly and are lubricated from the oil supply in the differential housing. Bearings are tapered rollers, adjustable to compensate wear. Maintain differential oil level with general purpose gear lubricant (refer to in Section 24, *"Lubrication"* for proper oil grade selection) to ensure adequate oil supply to wheel bearings at all times.

12.2 Bearing Adjustment

To adjust drive wheel bearings, raise vehicle until both dual wheels can be turned freely (approximately 6 inches from the ground). Position jack stands under drive axle, then lower vehicle approximately 2 inches in order to avoid entire weight of the axle being supported by the suspension air bellows and the shock absorber pins.

Remove axle shaft as indicated in *"Rockwell Field Maintenance Manual No. 5"* entitled *"Single Reduction Differential Carriers"* annexed to the end of Section 11 in this maintenance manual. Remove gaskets. Unscrew lock nut and remove adjusting nut lock ring.

To adjust, tighten adjusting nut until the wheel binds, rotate the wheel while tightening so that all surfaces are in proper contact. Back off adjusting nut approximately 1/4 to 1/3 turn to assure 0.001 inch to 0.007 inch end play and to ensure that wheel turns freely. Replace lock ring, and adjust nut dowel pin in one of the holes. The ring may be turned over if necessary to allow more accurate adjustment of bearings.

Tighten lock nut and recheck bearing adjustment. Replace the axle shaft using a new gasket.

12.3 Disassembly and Repair

Jack vehicle as outlined above under heading *"Bearing Adjustment"* and remove axle shaft as indicated in *"Rockwell Field Maintenance Manual no. 5"* entitled *"Single Reduction Differential Carriers"* annexed to the end of Section 11 in this maintenance manual. Remove wheels and tires.

Caution: *Always mark position of the wheel on the axle prior to removal, to replace wheel at the same location, thus avoiding a new wheel balancing.*

Remove lock nut, lock ring and adjusting nut from axle housing to prevent the outer bearing from falling out. Remove outer bearing cone and roller assembly.

Remove screws attaching inner oil seal retainer to hub, and remove inner oil seal assembly. Remove inner bearing cone and roller assembly. Bearing cups can be removed from the hub using a hammer and a long brass drift.

All parts should be thoroughly cleaned. Bearing cone and roller assemblies can be cleaned in a suitable cleaning solvent using a stiff brush to remove old lubricant.

If excessive wear, deterioration, cracking, or pitting are present on the bearing cups, rollers, or cones, the bearings should be replaced. Seals should be replaced each time they are removed from the hub. To install new oil seal, use a suitable adaptor and drive the seal into the retainer bore until it bottoms.

When installing wheel on spindle, center the wheel hub with spindle to avoid damaging the seal with the end of the spindle. Push wheel straight over the spindle until inside diameter of seal press fits on wiper ring. Prefill hub cavity with general purpose gear lubricant (refer to Section 24 *"Lubrication"* in for proper oil grade selection). Lubricate outer bearing cone and assemble.Adjust bearing and lock.

Assemble axle flange to axle using a new gasket. Apply sealant in stud area. After both wheels have been assembled according to above procedure, fill the differential to the proper factory recommended level.

Note: *During regular inspection, do not forget to check lubricant level in differential. Clean thoroughly or replace vent as required.*

13. TIRE MAINTENANCE

The most critical factor in tire maintenance is proper inflation (Fig. 6). No tire is completely impervious to loss of air pressure. To avoid the hazards of underinflation, lost air must be replaced. Improper inflation decreases tire life.

Any underinflated tire builds up excessive heat that may result in sudden tire destruction thus resulting in possible loss of vehicle control. Check inflation pressure on all the tires, including the spare tire, at least once a week before driving when tires are cold. This is especially important in cases where vehicle is operated by more than one driver.

Warning: *Failure to maintain correct tire inflation pressure may result in sudden tire destruction, improper vehicle handling, and will cause rapid and irregular tire wear. Therefore, inflation pressures should be checked weekly and always before long distance trips.*

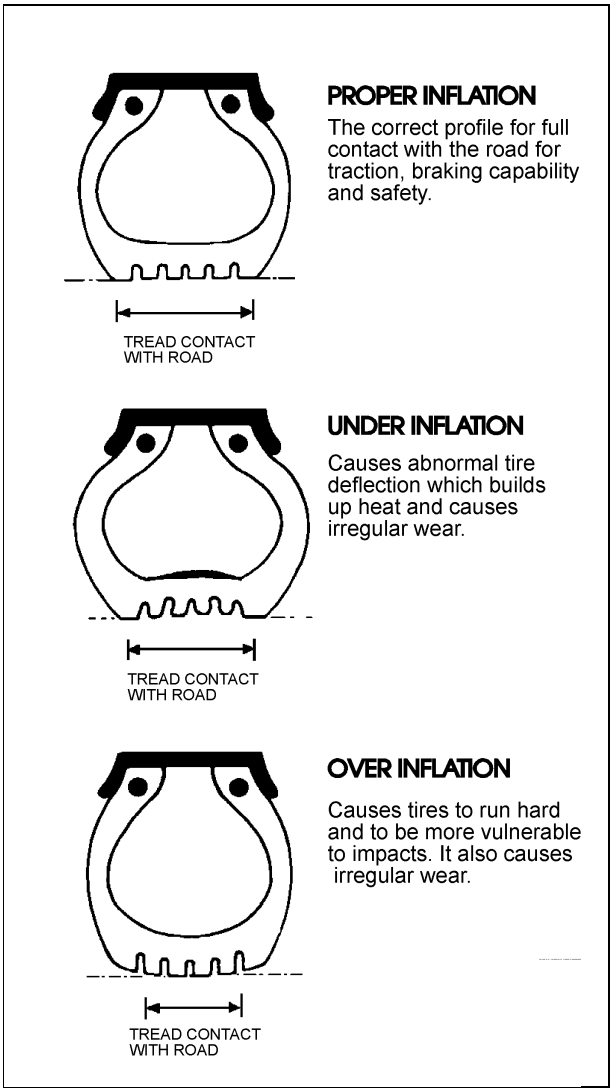

FIGURE 6: TIRE INFLATION MAXE130

13.1 Recommended Tire Inflation Pressure (Cold)

Keep the tires inflated to the recommended inflation pressure for prolonged tire life and safety. If the coach is equipped with 315/80 R 22.5 tires, then see charts below “Standard Inflation Pressure for H3 Coaches”, or else see the tire inflation pressures and loadings in the Coach Final Record in the technical publication box provided with the vehicle.

Note: *For a specific vehicle, inflation pressures vary according to loadings and type of tires.*

Note: *Tires are considered cold when the vehicle has not been driven for at least three hours, or driven less than 1 mile (1,6 km). Driving, even for a short distance, causes tires to heat up and air pressure to increase.*

Note: *Never bleed air from hot tires as tires will then be underinflated. Use an accurate tire gauge to check pressures. (Do not hit tires as an inflation check. This is an unreliable method).*

Note: *In the case of a converted vehicle, weigh vehicle fully loaded and pressurize according to tire manufacturer's recommendations.*

Warning: *All tires on the same axle should always be inflated to the same pressure. There should not be a difference in pressure between right and left tires on the same axle. A 5 psi (35 kPa) underinflation in one front tire can not only destroy ease of steering, but creates steering hazards which can lead to a potential accident.*

13.2 Tire Matching

Unmatched tires on drive axle will cause tire wear and scuffing, as well as possible damage to the drive unit. Consequently, we recommend that tires be matched within 1/8 inch of the same rolling radius, and ¾ inch of the same rolling circumference.

13.3 Wheel and Tire Balancing

Wheels and tires must be clean and free from all foreign matter. The tires should be in good condition and properly mounted. Unbalanced wheel and tire assembly can be due to a bent wheel or improper mounting. Before removing the wheel and tire assembly from the vehicle, check for swaying movement, and if necessary, check the wheel lateral runout as outlined under heading "Wheel Straightness Check". If tire balancing is required, refer to a specialist.

13.4 Tire Rotation

The radial tires should be rotated only when necessary. If the tires are wearing evenly, there is no need to rotate. If irregular wear becomes apparent or if the wear rate on the tires is perceptively different (from axle to axle), the tires should be rotated in such a manner as to alleviate the condition.

Note: *There is no restriction on criss-cross rotation.*

Standard Inflation Pressure for H3 Coaches

H3-41	Tires	Rims	Normal loading			Maximum loading		
			lbs	kg	Tire pressure (psi)	lbs	kg	Tire pressure (psi)
Front	315/80 R 22.5	22.5 X 9	12510	5685	85	16500	7500	115
Diff.	315/80 R 22.5	22.5 X 9	19850	9025	80	21600	9820	85
Tag	315/80 R 22.5	22.5 X 9	11250	5115	75	13700	6225	95
Maximum gross vehicle weight rating: 49,000 lbs (22 270 kg)								

H3-45	Tires	Rims	Normal loading			Maximum loading		
			lbs	kg	Tire pressure (psi)	lbs	kg	Tire pressure (psi)
Front	315/80 R 22.5	22.5 X 9	12725	5785	85	16500	7500	115
Diff.	315/80 R 22.5	22.5 X 9	20900	9500	80	21600	9820	85
Tag	315/80 R 22.5	22.5 X 9	11815	5370	80	13700	6225	95
Maximum gross vehicle weight rating: 49,000 lbs (22 270 kg)								

SECTION 14: STEERING

CONTENTS

1. STEERING SYSTEM 14-3
   1.1 Description 14-3
2. POWER STEERING GEAR 14-3
   2.1 Description 14-3
3. BLEEDING POWER STEERING HYDRAULIC SYSTEM 14-4
4. HYDRAULIC PRESSURE TEST 14-4
5. TROUBLESHOOTING 14-4
6. POWER STEERING HYDRAULIC PUMP 14-4
   6.1 Description 14-4
   6.2 Removal and Installation 14-4
7. STEERING WHEEL 14-4
   7.1 Removal 14-4
   7.2 Installation 14-5
8. STEERING COLUMN 14-5
   8.1 Removal and Lubrication 14-5
9. TURNING ANGLE ADJUSTMENT 14-5
10. STEERING LINKAGE ADJUSTMENT 14-5
11. PITMAN ARM 14-5
   11.1 Removal 14-5
   11.2 Installation 14-6
   11.3 Adjustment 14-6
12. MAINTENANCE 14-6
   12.1 Power Steering Reservoir and Filter 14-7
      12.1.1 Oil Level - Hot Check Procedure 14-7
      12.1.2 Filter Replacement 14-8
   12.2 Steering Stabilizer Cylinder (Damper) 14-8
   12.3 Hydraulic Cylinder Assembly 14-8
   12.4 Drag Link 14-8
   12.5 Power Steering Hydraulic Pump 14-8
13. TORQUE CHARTS 14-9
14. SPECIFICATIONS 14-10

LIST OF ILLUSTRATIONS

FIG. 1: STEERING SYSTEM AXLE SETUP 14-3
FIG. 2: FRONT SERVICE COMPARTMENT 14-4
FIG. 3: STEERING COLUMN 14-5
FIG. 4: PITMAN ARM ADJUSTMENT 14-6
FIG. 5: ENGINE COMPARTMENT R.H. SIDE DOOR 14-7
FIG. 6: TIE ROD END 14-9
FIG. 7: FRONT AXLE COMPONENTS 14-9

1. STEERING SYSTEM

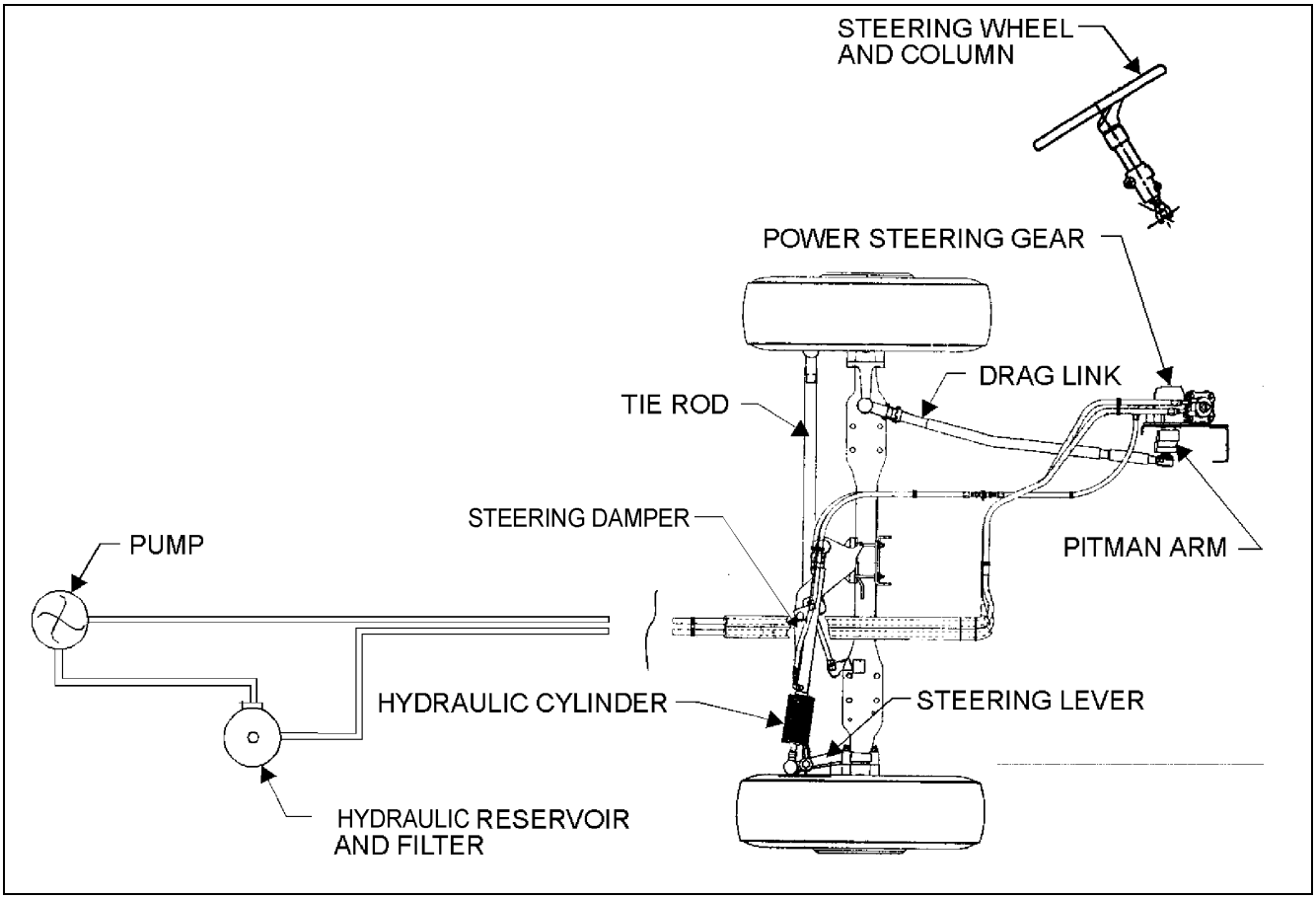

FIGURE 1: STEERING SYSTEM AXLE SETUP 14004

1.1 Description

The steering system is made up of following components, namely the steering wheel, steering column, shaft assembly, power steering gear, tie rod, pitman arm and drag link (Fig. 1).

Hydraulic components are added to transmit, increase and regulate steering control forces. These elements are:

1. Hydraulic cylinder ;
2. Steering stabilizer (damper);
3. A vane type hydraulic pump;and
4. Hydraulic reservoir and hoses.

The steering stabilizer reduces road shocks and vibrations in the system. The steering gearbox is self powered and provides movement with power assistance mainly to the left wheel. The hydraulic cylinder provides an added source of assistance and, being connected to the right wheel, makes it such that the total steering forces are produced with minimal stress on mechanical linkages.

Wheels, hubs, tires, air suspension, brakes, front suspension and front end alignment are covered in their respective sections in this manual.

2. POWER STEERING GEAR

2.1 Description

The power steering is located in the front lower service (Fig. 2). The integral power steering

gear (TAS 85) incorporates a manual steering mechanism, a hydraulic control valve and a hydraulic power cylinder.

Refer to the *"TAS 85 Steering Gear Service Manual"* annexed to this section for the functional aspects and maintenance procedure of the power steering gear.

Caution: *Before attempting to adjust the poppet valves of the power steering gear, properly set the steering stop screws as outlined in Section 10, "Front Axle", under* heading "6.4 TURNING ANGLE ADJUSTMENT*".*



FIGURE 2: FRONT SERVICE COMPARTMENT 14005

3. BLEEDING POWER STEERING HYDRAULIC SYSTEM

To bleed the power steering hydraulic system, refer to the *"TAS 85 Steering Gear Service Manual"* annexed to this section, under heading *"Filling and Air Bleeding the System"*.

4. HYDRAULIC PRESSURE TEST

Perform a pressure test as outlined in the *"Chart your Way to Easy Steering"* annexed to this section.

5. TROUBLESHOOTING

Perform troubleshooting of the steering gear as outlined in the *"Chart your Way to Easy Steering"* annexed to this section.

6. POWER STEERING HYDRAULIC PUMP

6.1 Description

The power steering pump is a vane type, gear driven, hydraulic unit which supplies hydraulic pressure for the operation of the steering gear. The pump is mounted on the engine, beside the crankshaft pulley.

6.2 Removal and Installation

The pump is accessible through the engine compartment rear door. To remove the pump, disconnect the inlet and outlet hoses from the pump, then remove the two mounting screws. Cap hose openings to prevent contamination of hydraulic system. The mounting flange gasket should be replaced whenever pump is removed. To install pump, reverse the removal procedure.

7. STEERING WHEEL

7.1 Removal

1. Set the battery main disconnect switches to the *"*OFF*"* position.

2. Using a tool, such as a little flat head screwdriver, pry off the electric horn cap.

3. Loosen the small screw in center of cap and the other retaining the black wire, then disconnect the white terminal. Remove horn cap.

4. Loosen and remove the steering wheel nut.

5. Using a suitable puller, remove the steering wheel.

7.2 Installation

To install, reverse the removal procedure. Torque steering wheel nut to 35-45 lbf•ft (47-60 N•m).

8. STEERING COLUMN

8.1 Removal and Lubrication

To disassemble the steering column, refer to Figure 3 as a guide. The steering column has three lubrication points which must be serviced only when needed, using a good quality lithium-base grease NLGI No. 1 and 2. The lower steering column U-joint grease fitting is easily accessible through the front service compartment. The upper steering column U-joint and the steering slip joint grease fittings are accessible from the front driver's area. To access these fittings, proceed as follows:

1. From the front driver's area, unfasten and lift the steering column boot, then remove the four snap caps on front of upper steering column cover (Fig. 3).

2. Unscrew the four retaining screws on upper steering column cover. Remove the upper cover.

3. Unscrew the three retaining screws on lower steering column cover. Remove the lower cover.

4. Position the steering wheel in order to gain access to the grease fittings.

Note: *For an easier access to the slip joint grease fitting, lift steering wheel to its maximum position using the release handle located on the left-hand side of the steering column.*

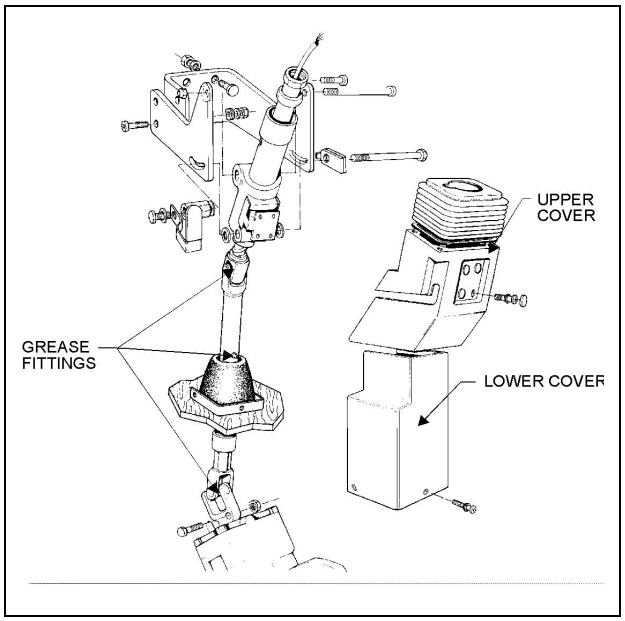

FIGURE 3: STEERING COLUMN ..14008

9. TURNING ANGLE ADJUSTMENT

To adjust the turning angle, refer to Section 10, "Front Axle", under heading "6.4 TURNING ANGLE ADJUSTMENT".

10. STEERING LINKAGE ADJUSTMENT

To adjust the steering linkage, refer to Section 10, "Front Axle", under heading "6. FRONT WHEEL ALIGNMENT".

11. PITMAN ARM

11.1 Removal

1. Remove cotter pin, nut and washers from drag link ball stud at pitman arm.

2. Disconnect drag link from pitman arm, using jaw style pullers (pressure screw type).

Warning: *Always wear approved eye protection when operating pullers.*

Caution: *Do not drive pitman arm on or off pitman shaft as this can damage the steering gear.*

Caution: *Heating of components to aid in disassembly is not allowed because it has a detrimental effect on axle components and steering linkages.*

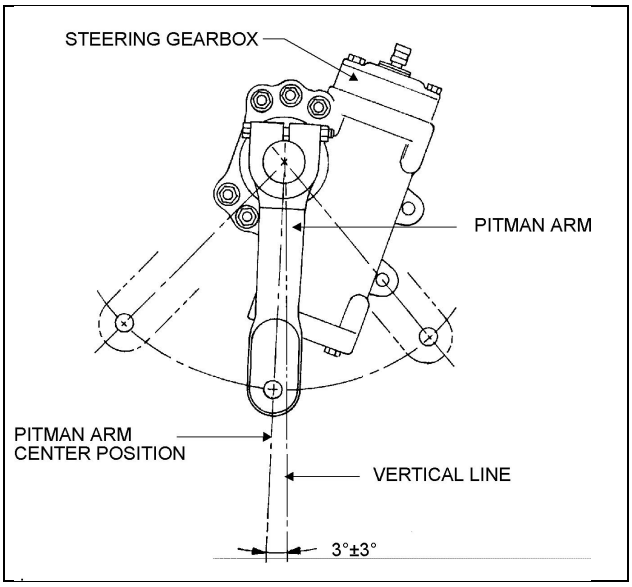

FIGURE 4: PITMAN ARM ADJUSTMENT 14007

3. Remove pitman arm clamp bolt nut, washer and bolt.

4. Check the radial position of the pitman arm in relation to the sector shaft prior to removal of pitman arm.

5. Add reference marks to the arm and shaft if necessary to ensure correct alignment at reassembly.

6. Remove pitman arm. A chisel will help you loosen the pitman arm. Use a puller if you cannot remove the pitman arm manually.

11.2 Installation

1. Position pitman arm on sector gear shaft with reference marks aligned. Ensure that the clamp bolt groove matches.

2. Install bolt, washer and nut. Tighten nut to 280-300 lbf•ft (380-408 N•m).

3. Connect drag link to pitman arm. Install washers. Tighten nut to 200-220 lbf•ft (272-300 N•m). Afterwards, install a new cotter pin.

11.3 Adjustment

1. Disconnect the drag link from pitman arm. Center steering wheel by dividing the total number of steering wheel turns in two. Scribe a reference mark on steering gearbox at the center previously determined.

2. Using a protractor, check the angle of the pitman arm.

3. The pitman arm should be adjusted to an angle of 3° ± 3° in relation with the vertical axis (towards rear of vehicle), refer to Fig. 4 for details. If not, unscrew and remove bolt, nut and washer. Remove the pitman arm according to the procedure outlined under previous heading "11.1 REMOVAL". Adjust to the proper angle.

4. When adjustment is achieved, replace bolt, nut and washer, and torque to 280-300 lbf•ft (380-408 N•m).

12. MAINTENANCE

The power steering system requires little maintenance. However, the system should be kept clean to ensure maximum operating performance and troublefree service. Periodic inspections should also be made to check leakage.

When the slightest evidence of dirt, sludge or water is discovered in the system, disconnect fluid lines at the power steering gear to drain the system. Drain and refill the system with *"Dexron-IIE or Dexron-III"* automatic transmission oil.

Air in the hydraulic system will cause spongy action and noisy operation. When any hose has been disconnected or when fluid has been lost for any reason, the system must be bled. Bleed system as outlined under heading *"*3. BLEEDING POWER STEERING HYDRAULIC SYSTEM*"* in this section.

Warning: *Do not operate the pump without fluid in the power steering fluid reservoir.*

If the steering linkage between the steering gear and the two front wheels is not properly adjusted, bent, twisted or worn, the steering of the vehicle will be seriously impaired. Whenever any steering linkage part is repaired, replaced or adjusted, steering geometry and front wheel alignment must be checked and necessary correctionsmade.Refer to Section 10, entitled *"Front Axle"* for paragraph "6. FRONT WHEEL ALIGNMENT".

At regular lubrication intervals, the steering linkage should be thoroughly inspected for worn or loose components.

After the vehicle has been operated continually and high mileage figures have been reached, overhaul of the various steering units will be required. General overhaul procedure normally requires removal of the entire assembly, cleaning and inspection of all parts and final assembly.Careful inspection of all parts during overhaul is very important and must not be neglected.

All lubrication fittings must be cleaned before applying lubricant. Moreover, always be sure the equipment used in applying lubricant is clean. Every precaution should be taken to prevent entry of dirt, grit, lint or other foreign matter into lubricant containers. Replace fittings that have become broken or damaged. Lubrication intervals, as well as the recommended lubricants for the steering components, are given in the *"Lubrication and Servicing Schedule"* in Section 24 of this manual. The intervals given in the schedule are recommended for normal service. More frequent intervals may be required under severe operating conditions.

12.1 Power Steering Reservoir and Filter

The power steering reservoir is located on R.H. side of engine compartment, on front wall (Fig. 5). At regular intervals, fluid level should be checked in the reservoir and filter assembly. Furthermore, the oil filter cartridge element in the power steering reservoir should be replaced every 50,000 miles (80 000 km) or once a year, whichever comes first.

12.1.1 Oil Level - Hot Check Procedure

1. Stop engine. Open engine compartment R.H. side door.
2. Unscrew and remove the dipstick located on top of reservoir and wipe with a clean rag.
3. Replace dipstick in reservoir. Remove it again to check fluid level.
4. Adjust level to *"FULL"* mark, using *"Dexron-IIE or Dexron-III"* automatic transmission oil.
5. Replace and tighten the dipstick.

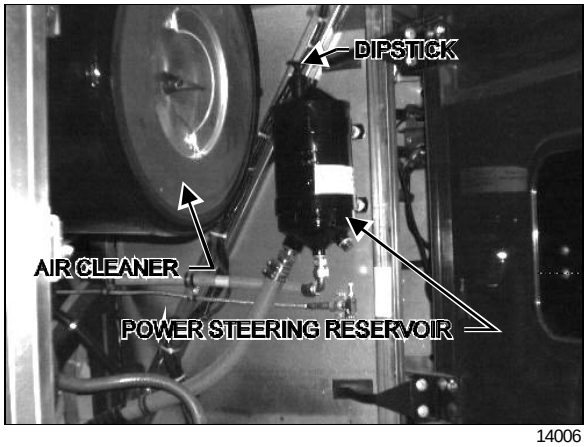

14006

FIGURE 5: ENGINE COMPARTMENT R.H. SIDE DOOR

12.1.2 Filter Replacement

1. Unscrew and remove the wing nut located on top of the power steering reservoir.

2. Remove the reservoir cover and gasket.

3. Remove the retaining spring and finally the filter cartridge element.

12.2 Steering Stabilizer Cylinder (Damper)

This vehicle is provided with a steering stabilizer cylinder installed on right-hand side of front axle. The cylinder is non-repairable, so if oil leakage is evident or cylinder has no resistance, the complete unit must be replaced. Lubricate the steering stabilizer cylinder rod end every 6,250 miles (10 000 km) or twice a year, whichever comes first. Good quality lithium-base grease NLGI No. 1 and 2 are recommended. Inspect the spherical joint regularly. In case of wear, replace rod end assembly.

12.3 Hydraulic Cylinder Assembly

The hydraulic cylinder is installed on the right hand side of front axle. Repair kit Prévost # 660902 containing seal is available. Lubricate the fittings at each cylinder end of the power steering cylinder every 6,250 miles (10 000 km) or twice a year, whichever comes first. Good quality lithium-base grease NLGI No. 1 and 2 are recommended

12.4 Drag Link

Lubricate the fittings every 6,250 miles (10 000 km) or twice a year, whichever comes first. Good quality lithium-base grease NLGI No. 1 and 2 are recommended.

12.5 Power Steering Hydraulic Pump

For the maintenance of the power steering hydraulic pump, refer to the *"Vickers Overhaul Manual"* annexed to this section.

13. TORQUE CHARTS

TORQUE (DRY)			
Descriptions	**References**	**lbf•ft**	**N•m**
Drag link end stud nut (on steering arm)	Fig. 1	160-300	218-409
Drag link end pinch bolt nuts	Fig. 1	50-65	68-88
Drag link end stud nut (on pitman arm)	Fig. 1	160-300	218-409
Tie rod end screw pin nut	Fig. 6, T1	100-175	136-237
Tie rod end pinch bolt nuts	Fig. 6, T2	65-75	88-102
Hydraulic cylinder fixation nuts	Fig. 6, T1	160-300	218-409
Steering stabilizer cylinder fixation nuts	Fig. 7, T2	100-120	136-164
Retaining rod support fixation nuts	Fig. 7, T3	150-200	204-273
Steering damper and hydraulic cylinder mounting support nuts	Fig. 7, T4	66-70	90-95
Steering top lever nuts	Fig. 7, T5	150-200	203-271

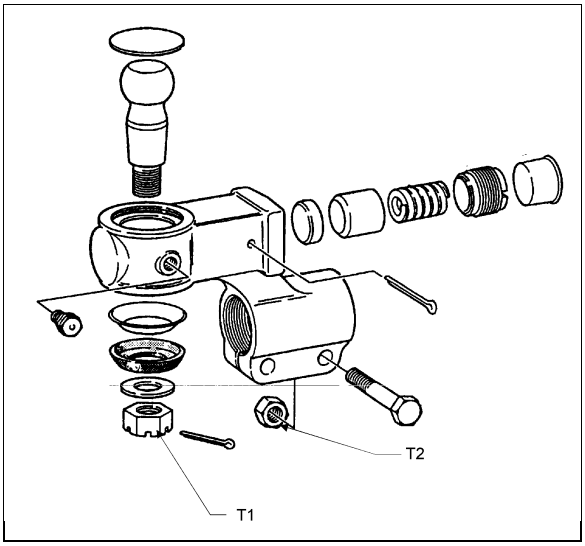

FIGURE 6: TIE ROD END 14009

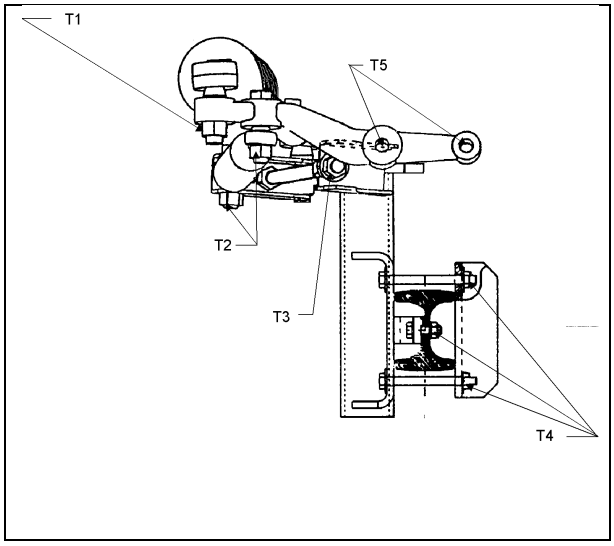

FIGURE 7: FRONT AXLE COMPONENTS 14010

14. SPECIFICATIONS

Power Steering Gear

Make	TWR
Model	TAS 85
Supplier number	TAS85040
Prevost number	660927
F.E.W.	18,000 lbs (8 200 kg)
Pressure rating	2,175 psi (150 Bar)
Gear ratio	23.3:1
Minimum pump flow for 1.5 hwt/sec	3.5 gpm (13.2 lpm)

Power Steering Pump

Make	Vickers
Type	V20
Relief valve setting	2,250 psi (15 510 kPa)
Supplier number	V20NF-1R11T-38C6J-22-LH
Prevost number	661006

Power Steering Reservoir

Make	Nelson Muffler
Oil capacity	4 US qts (3.7 liters)
Supplier number	91410A
Prevost number	660982
Make	Nelson Muffler
Element filter - Supplier number	83804 E
Element filter - Prevost number	660987

Steering Stabilizer Cylinder (Damper)

Make	Gabriel
Extended length	32.73±0.12"
Collapsed length	20.26±0.12"
Stroke	12.47±0.12"
Supplier number	651535
Prevost number	660979
Dust cap - Prevost number	660980

Hydraulic Cylinder Assembly

Make	Hayes-Dana
Bore	1 1/2"
Stroke	17"
Rod diameter	0.875"
Supplier number	006-9231-0
Prevost number	16-0886
Repair kit - Supplier number	306-7200-00
Repair kit - Prevost number	660902

TRW Automotive
Steering & Suspension Systems

TAS Steering Gear Service Manual

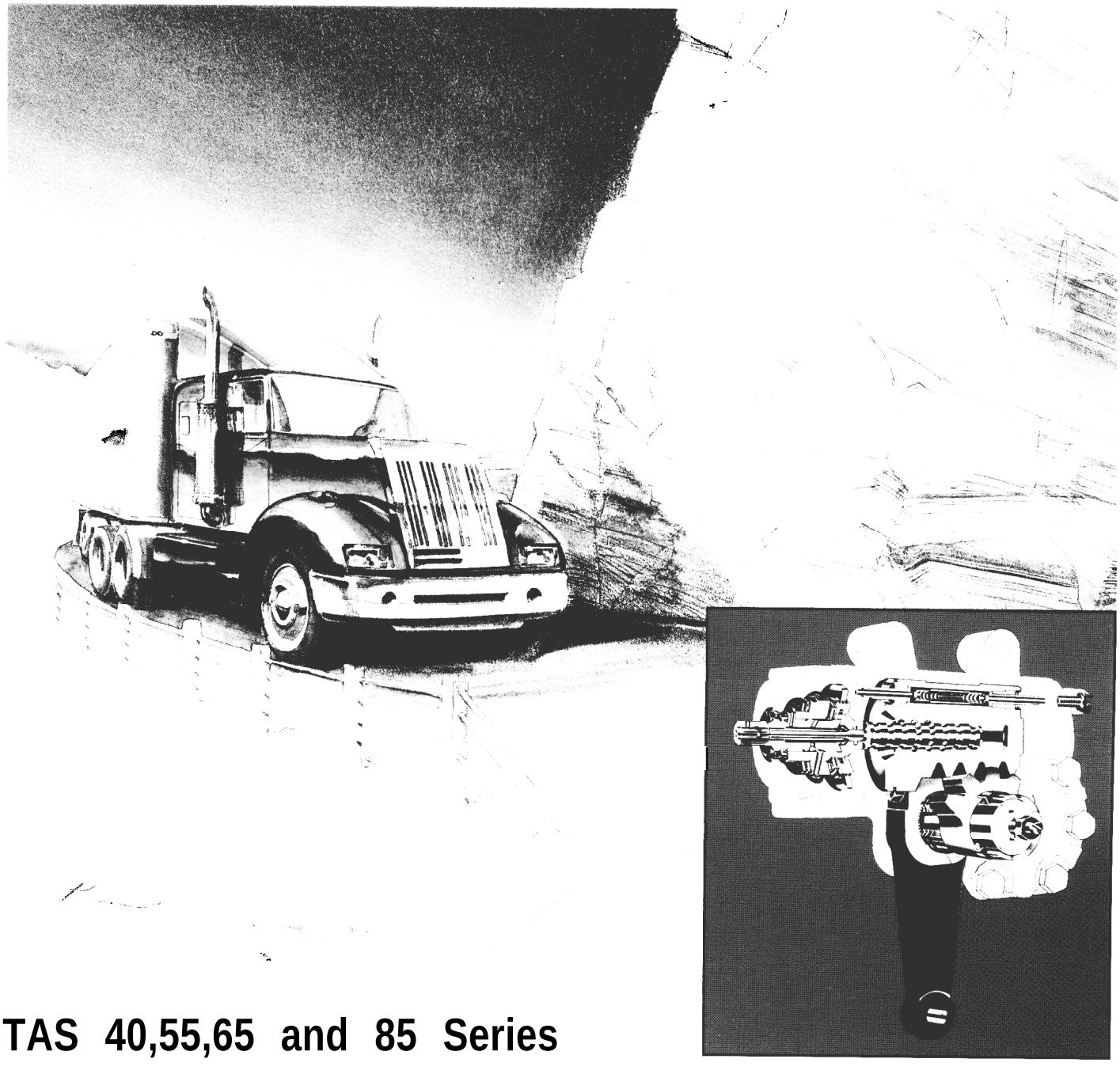

TAS 40,55,65 and 85 Series

Design Features

1. **Rotary Valve -** This device provides responsive steering control.

2. **Poppets (optional)-** These unloading valves are automatically set to furnish power steering pump protection and reduce pressure to unload steering linkage at vehicle axle stop settings.

3. **Recirculating Balls -** Combine high mechanical efficiency with smooth operation.

4. **Dirt& Water Seals -** Lip-type seals on both input and output shafts.

5. **Torsion Bar -** Provides positive valve centering with definitive “feel of the road”.

- Relief valves furnish pump protection by limiting maximum pressure (optional).
- Balanced area cylinder so back pressures cannot affect steering stabililty.
- High temperature seals were developed to with-stand temperatures of 250°F,
- Manual steering capability provides for steering control in the event of hydraulic failure
- Auxiliary porting available for auxiliary cylinder control
- Seal protectors provide protection from harsh environment conditions

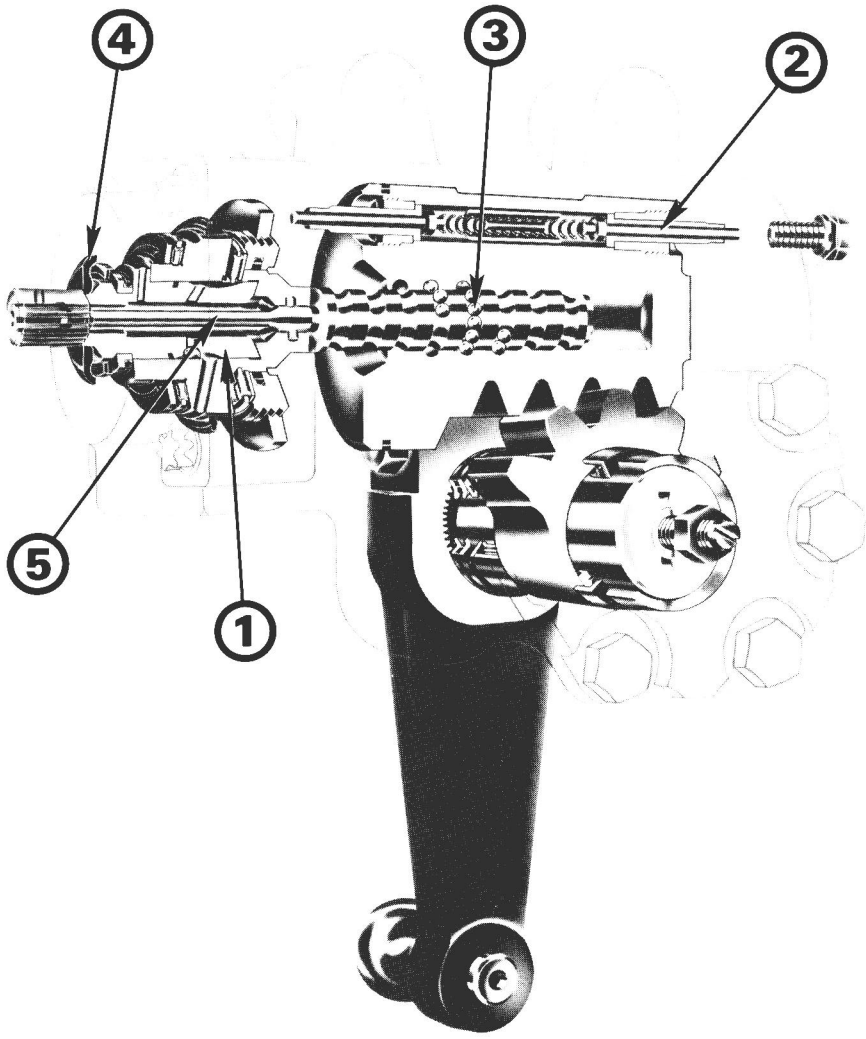

Hazard Warning Definitions

⚠ WARNING	**A warning describes hazards or unsafe practices which could result in severe personal injury or death.**
⚠ CAUTION	**A caution describes hazards or unsafe practices which could result in personal injury or product or property damage.**
NOTE	A note gives key information to make following a procedure easier or quicker.

Disclaimer

This Service Manual has been prepared by TRW Commercial Steering Division for reference and use by mechanics who have been trained to repair and service steering components and systems on heavy commercial vehicles. TRW Commercial Steering Division has exercised reasonable care and diligence to present accurate, clear and complete information and instructions regarding the TRW Commercial Steering TAS Series Integral Power Steering Gears. Since this IS a general Service Manual, the photographs and illustrations may not look exactly like the steering gear being serviced. The procedures, therefore , must be carefully read and understood before servicing,

If inspection or testing reveals evidence of abnormal wear or damage to the TAS steering gear or if you encounter circumstances not covered in the Manual, STOP - CONSULT THE VEHICLE MANUFACTURER'S SERVICE MANUAL AND WARRANTY DO NOT TRY TO REPAIR OR SERVICE ATAS STEERING GEAR WHICH HAS BEEN DAMAGED OR INCLUDES ANY PART THAT SHOWS EXCESSIVE WEAR UNLESS THE DAMAGED AND WORN PARTS ARE REPLACED WITH ORIGINAL TRW REPLACEMENTAND SERVICE PARTS AND THE UNIT IS RESTORED TO TRW'S SPECIFICATIONS FOR THE TAS STEERING GEAR.

It IS the responsibility of the mechanic performing the maintenance, repairs or service on a particular TAS steering gear to (a) Inspect the steering gear for abnormal wear and damage, (b) choose a repair procedure which wiII not endanger his/her safety, the safety of others, the vehicle, or the safe operation of the vehicle, and (c) fully inspect and test the TAS steering gear and the vehicle steering system to ensure that the repair or service of the steering gear has been properly performed and that the steering gear and system wiII function properly.

Patents

TRW Commercial Steering Division TAS power steering gears are covered by several United States and foreign patents, either issued or pending,

© TRW Inc., 1992

Contents

Section 1 General Information

Directory for Chart Your Way to Easy Steering Users. 3
Introduction. 4
Oil Flow illustration. 5
General Design 6
General Operation 7
Approved Hydraulic Fluids 8
Gear Specification Numbers.. 8
Torque Chart 9
Exploded View . . . .9A&9B
Service Parts List 1O

Section 2 Initial Installation

Installation 11
Poppet Setting 11
Maintenance Tips 12

Section 3 On-Vehicle Service

Filling and Air Bleeding the System 13
Input Shaft Seal Replacement 14
Sector Shaft Adjustment 18
Poppet Readjustment 20

Section 4 Reseal & Repair

Disassembly 23
Inspection 31
Assembly 33
Internal Damage Repair (by reference)
Poppet Component Replacement 4l
Valve Housing Worm Screw Disassembly 43
Roller Bearing or Retaining Ring Replacement 50
Replace Housing Ports, Plugs, Screws, Fittings 51
Final AdJustments. 52

Section 5 Reinstallation

Reinstallation 55
Poppet Resetting .. . . . . 55.
Maintenance Tips 56

Glossary 57

⚠ WARNING **All steering mechanisms are safety critical items. As such, it is imperative that the instructions in this booklet be followed to the letter. Failure to observe the procedures set forth in this pamphlet may result in a loss of steering.**

Section 1 General Information

Directory for Chart Your Way to Easy Steering Users 3

Introduction 4

Oil Flow Illustration 5

General Design 6

General Operation 7

Approved Hydraulic Fluids 8

Gear Specification Numbers 8

Torque Chart 9

Exploded View . .. .9A &9B

Service Parts List ... .I O

Chart Your Way to Easy Steering Directory

Chart Your Way to Easy Steering is a separate publication (actually a Manual, Flow Charts and two Videotapes) that facilitates troubleshooting steering system complaints. If while using this tool, your system has failed one or more tests, you probably have been directed to this Service Manual for repairs. The following directory will help you locate the specific repairs you will need to make to proceed with the Chart Your Way to Easy Steering process.

Use Example: The driver of the vehicle you are working on complains of "Steering Wheel Kick". You have first determined (using Chart Your Way to Easy Steering that there IS no air in the system, The book then directs you to perform test #18 to check for lash in the system. While performing this test you detected lash or lost motion from the input shaft to the output shaft. Since this looseness IS inside the steering gear you would refer to this Service Manual and locate the test number of the failed test, test #18. The problem listed below is "Input shaft - Output shaft lash", and the solution is to make a sector shaft adjustment. You would then proceed to section 3 of this Service Manual and perform the Sector Shaft Adjustment procedure.

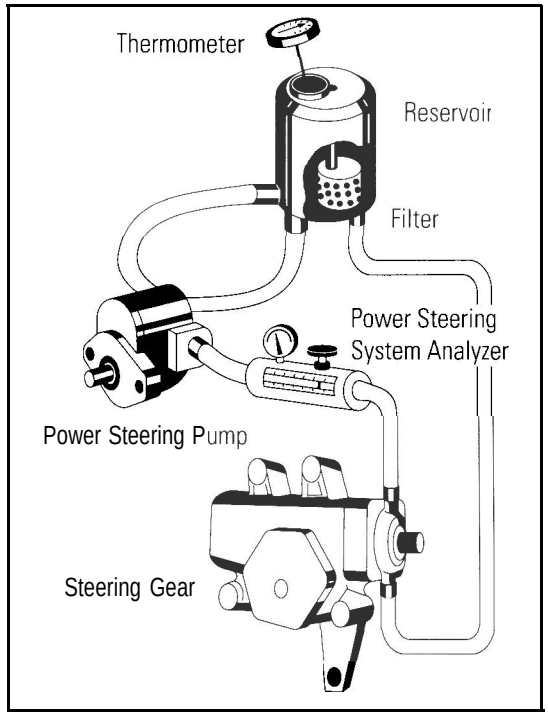

Failed Test	Problem	Solution	Section
Test 8	Excessive Internal Leakage	Replace damaged parts / reseal	4
Test 9	Excessive Internal Leakage	Replace damaged parts / reseal	4
Test 11	Intermittent loss of power assist	Reseal	4
Test 12	Air in hydraulic system	Bleed system	3
Test 17	Poppets improperly set	Reset poppets	3
Test 18	Input shaft - Output shaft lash	Adjust sector shaft	3
Test 19	Steering gear misadjusted	Adjust sector shaft first if required, replace worm assembly	3 4
Test 28	Gear control valve imbalance	Replace worm-valve assy / reseal	4
External Leakage	Porosity in housing, side cover or valve assy	Replace porous parts / reseal	4
	Input shaft seal	Replace seal	3
	Output shaft seal	Reseal	4
	Side cover seal, vent plug, bolts, gaskets	Replace parts / reseal	4
	Valve housing sealing area	Remove nicks or replace/ reseal	4
	Poppet screw or sealing nut	Replace with poppet adjusting screw kit / Reset poppets	3

Introduction

This new TAS Service Manual replaces all previous editions of TRW's TAS40, 55, 65 and TAS85 Service Manuals.

Changes in the layout of this Service Manual reflect TRW's commitment to provide easily usable material and highly recognizable hazard notices, Some of the major changes are:

- Revised caution and warning definitions that conform to international standards.
- Revised torque, force, pressure and flow notations that conform to international standards.
- Service Manual divided into sections for easier reference.
- Directory for Chart Your Way to Easy Steering users to speed service of correctly diagnosed problems.
- Uninterrupted resealing instructions. Reference to damage section allows you to repair or replace damaged parts and return to the resealing procedures easily.
- Binding process that better allows the Service Manual to lay flat.

The three-column format used in the Service Manual will also help make it easy for you to service a steering gear. Column 1 illustrates the procedure with photographs, column 2 gives a brief key as well as tools to be used for each procedure, and column 3 explains in detail the procedure you should follow. **Pay special attention to the notes, cautions and warnings.**

The exploded view is on a fold-out page so you can see it while reading through the procedures, Item numbers on the exploded view correspond with item numbers used throughout the Service Manual.

As you gain experience in servicing TAS steering gears, you may find that some information in this Service Manual could be clearer and more complete. If so, let us know about it, Don't try to second-guess the Service Manual; if you do not understand a procedure, or are stuck, contact our Field Service Department at 317.423.5377. Servicing TAS series steering gears should be safe and productive.

A **special thanks to our customers who took the time to review this document prior to printing. It's a better publication because of your effort.**

Oil Flow Illustration

Right Hand Lead

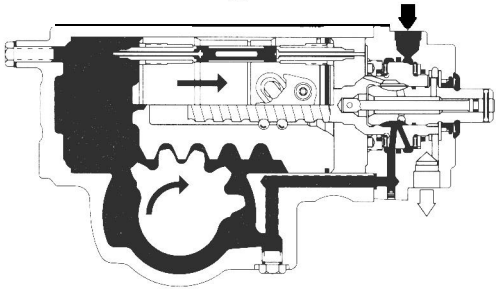

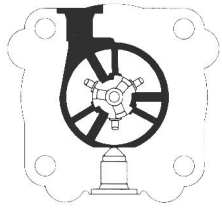

Left Hand Lead

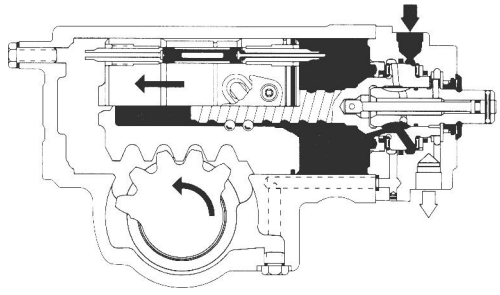

Right Hand Turn

Steering Wheel Input:
Clockwise Rotation

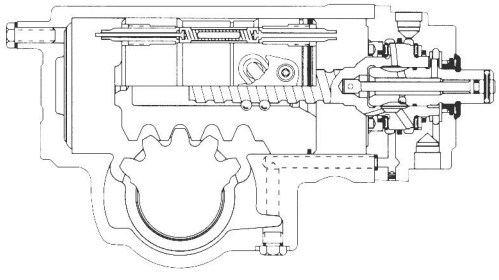

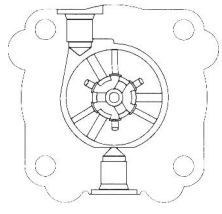

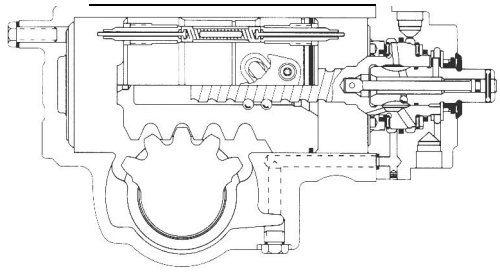

Straightline Running

No Steering Action

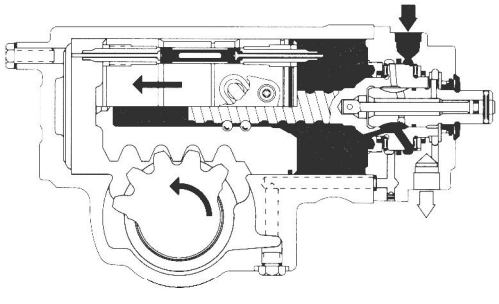

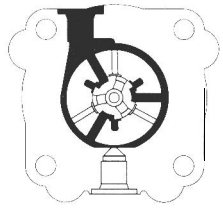

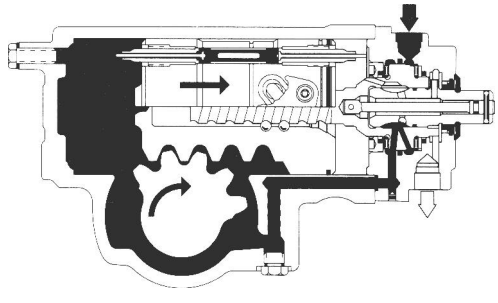

Left Hand Turn

Steering Wheel Input:
Counter-Clockwise Rotation

■ **Supply Pressure**

□ **Return Pressure**

General Design

Integral Power Steering

TAS power steering gears are the latest design in the TRW Commercial Steering Division family of integral hydraulic power steering gears. Integral hydraulic power steering means that the gear contains a manual steering mechanism, a hydraulic control valve, and a hydraulic power cylinder, all in a single, compact package

Rotary Control Valve

The rotary control valve combines simplicity of construction with desirable performance characteristics. The speed at which the driver can turn the steering wheel with power assist IS dependent upon the pump flow (measured in gallons per minute or liters per minute) directed to a cylinder cavity. The control valve controls flow through the steering gear.

The pressure (measured in pounds per square inch, or bar) required for the gear to steer the vehicle is created by the power steering pump to overcome resistance at the steered wheels. The control valve senses these requirements and directs fluid to the appropriate cylinder cavity in the steering gear (and in the auxiliary cylinder if it is a dual steering system) at the proper flow rate and pressure,

Pressure Means Work, Flow Means Speed

The higher pressure a steering gear can withstand, the more work it can perform, The maximum operating pressure for all TAS gears is 2,175 psi (150 bar), maximum flow rate for all TAS gears is 8 gal/min (30.3 L/min).

The TAS series gears can steer a vehicle withtin its front-end weight rating through a turn at low speed and engine idle. As the driver turns the steering wheel faster or slower, more or less fluid wiII be required by the gear. TAS series vehicle front-end weight ratings are as follows:

Gear	Front Axle Rating
TAS40	9,000 lb (4,100 kg)
TAS55	12,000 lb (5,400 kg)
TAS65	14,300 lb (6,500 kg)
TAS85	18,000 lb (8,200 kg)

The recommended minimum flow at 1½ steering wheel turns per second is as follows:

Gear	Minimum Flow Rate
TAS40	2.2 gal/min (8.3 L/min)
TAS55	2.6 gal/min (9,8 L/min)
TAS65	3.0 gal/min (11,4 L/min)
TAS85	3.6 gal/min (13.6 L/min)

If the steering gear valve is controlling an auxiliary cylinder, increased minimum flow is required (generally at least 75%) based on the size of the auxiliary cylinder and the vehicle's steering geometry.

General Operation

What Happens During a Steering Maneuver

When the driver turns the steerling wheel, he transmits force from the steering wheel to the steering gear input shaft, A torsion bar, pinned at its one end to the input shaft and at its other end to the worm shaft, turns with the input shaft and exerts a rotational force on the worm shaft. In response to this rotational force, the worm shaft, acting through the recirculating ball mechanism, tries to move the rack piston axially through the gear housing cylinder bore

The rack piston's axial movement is resisted by its engagement to the sector shaft, which is connected by linkage to the steered wheels. Because of this resistance, the torsion bar is twisted by the input shaft, thereby actuating the control valve. Pressurized fluid, directed by the control valve, assists in moving the rack piston axially through the cylinder bore. The rack piston then turns the sector shaft to steer the vehicle.

Shock Loads to the Gear

If the steered wheels receive a shock load, the shock forces are transmitted through the sector shaft to the rack piston, and on to the worm shaft. The internal geometry of the steering gear causes the control valve to send high-pressure fluid to the correct cylinder cavity to resist the shock forces. By absorbing the shock forces hydraulically, the steering gear prevents objectionable kickback at the steering wheel.

Unloading (Poppet) Valves

Most TAS gears are equipped with two unloading valves, one at each end of the rack piston. One valve or the other, depending on the direction of turn, will trip as the steered wheels approach the axle stops (which must be set according to manufacturer's specification). The tripped valve reduces pressure in the gear and helps to reduce heat generated by the pump. At the same time, the valves also reduce forces on the steering linkage. These valves are automatically set to axle stops after installation in vehicle at first full right and left turn.

Relief Valve

Some TAS gears, (with or without poppets), are supplied with a relief valve. The relief valve limits maximum supply pressure to protect the power steering gear, but it does not reduce pressure as the steered wheels approach the axle stops.

Bleed Systems

Some TAS gears which are mounted with the output shaft above the rack piston bore are equipped with either an automatic bleed system or a manual bleed screw.

The procedure for air bleeding the system IS on page 13 of this manual. Replacement of damaged automatic bleed plugs, and manual bleed screws is described on page 51.

Approved Hydraulic Fluids

Automatic Transmission Fluid Dexron II
Automatic Transmission Fluid Type “E” or “F”
Chevron 10W-40
Chevron Custom 10W-40 Motor 011
Chevron Torque 5 Fluid
Exxon Nuto H32 Hvdraulic Fluid
Fleetrite PSF (Can #990625C2)
Ford Spec. M2CI 38CJ
Mack EO-K2 Engine Oil
Mobil ATF 210
Mobil Super 10W-40 Motor 011
Shell Rotella T30W
Shell Rotella T SAE 30
Texaco 10W-40
Texaco TL-I 833 Power Steering Fluid
Union 10W-40
Union 15W-40
Unocal Guardol 15W-40 Motor Oil

The steering system should be kept filled with one of the above fluids.

⚠ WARNING **Completely flush the steering system with one of the recommended fluids above only. Do not mix oil types. Any mixture or any unapproved oil could lead to seal deterioration and leaks. A leak could ultimately cause the loss of fluid, which could result in a loss of power steering assist.**

Specification Numbers

The steering gear specification number and date code are stamped on a machined surface opposite the input shaft of every TAS gear. An example date code would be 01 2-90; this means the gear was built on the 12th day of 1990.

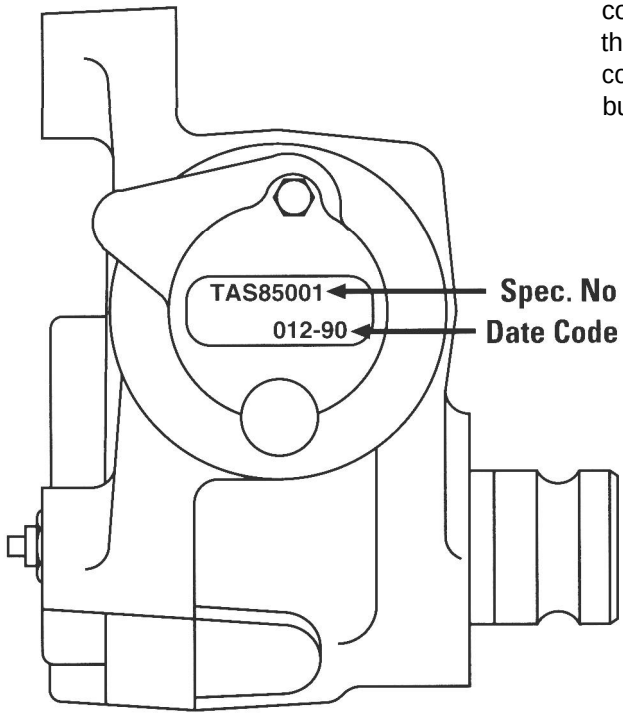

TAS Series Exploded View -- Typical

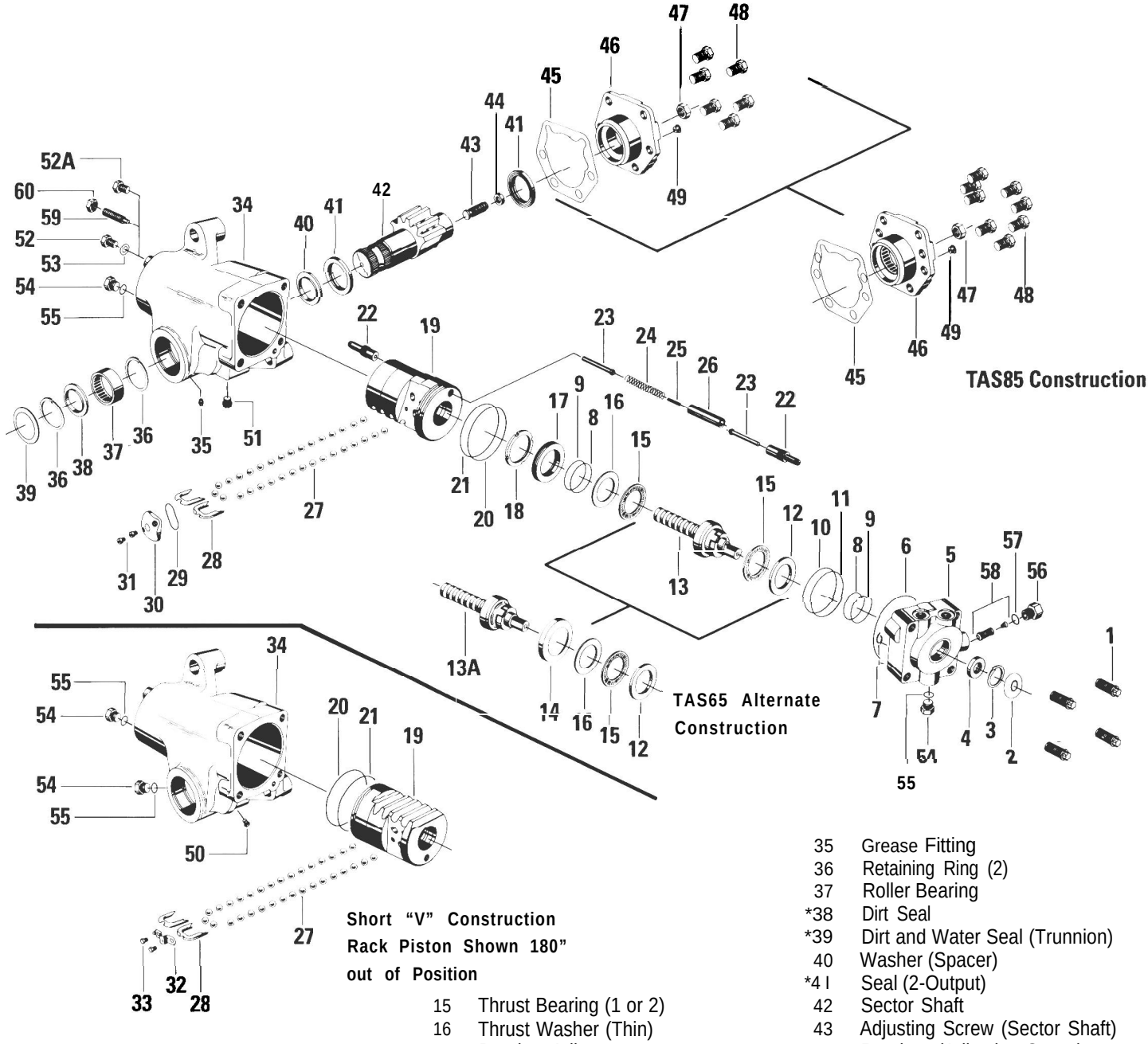

Item	Description
	Bolts (4-Valve Housing)
*2	Dirt and Water Seal
*3	Retaining Ring
'4	Seal (Input Shaft)
5	Valve Housing
*6	Seal Ring (Valve Housing)
*7	Seal Ring (Valve Housing)
*8	Seal Ring (2)
*9	O-ring (2)
*I0	Seal Ring
*11	O-ring (Valve Housing)
12	Thrust Washer (Thick)
13	Input Shaft, Valve, Worm Assy.
13A	Input Sh,, Valve, Worm Assy. (Alt)
14	Spacer Sleeve (Alt.)
15	Thrust Bearing (1 or 2)
16	Thrust Washer (Thin)
17	Bearing Adjuster
*I8	Adjuster Locknut
19	Rack Piston
*2O	Teflon Seal Ring
*2 I	O-ring (Back up, Rack Piston)
22	Poppet Seat and Sleeve Assy (2)
23	Poppet (2)
24	Poppet Spring
25	Spacer Rod
26	Push Tube
27	Balls
*28	Ball Return Guide Halves (2)
*29	Seal (Cap)
30	Ball Return Guide Cap
'31	Torx Screws (2-Cap)
*32	Ball Return Guide Clip
33	Hex Screws (2-Clip)
34	Housing
35	Grease Fitting
36	Retaining Ring (2)
37	Roller Bearing
*38	Dirt Seal
*39	Dirt and Water Seal (Trunnion)
40	Washer (Spacer)
*4 I	Seal (2-Output)
42	Sector Shaft
43	Adjusting Screw (Sector Shaft)
44	Retainer (Adjusting Screw)
*45	Gasket (Side Cover)
46	Side Cover Assembly
47	Jam Nut
48	Special Bolts (6 or 8-Side Cover)
*49	Vent Plug (Side Cover)
50	Bleed Screw (Manual)
51	Plug (Auto Bleed)
52	Fixed Stop Screw (Poppet)
52A	Fixed Stop Screw (Poppet-Alt)
53	Washer (Stop Screw)
54	Auxiliary Port Plug (2)
*55	O-ring (2-Aux Port Plug)
56	Relief Valve Cap
*57	O-ring (Relief Valve)
58	Relief Valve (2 piece)
59	Service Poppet Adjusting Screw
60	Service Sealing Jam Nut

*These items are included in seal kits. Kits also include 406015 lubricant and a service bulletin.

Service Parts List

Common Parts

Item	Description	Part Number
1	Bolts (4-Valve Housing)	020251
2	Dirt and Water Seal	478044
3	Retaining Ring	401637
4	Seal (Input Shaft) (High Temp)	478076
7	Seal Ring (Valve Housing)	032823
8	Seal Ring (2)	029123
9	O-ring (2) (High Temp)	032200-158
10	Seal Ring	029116
11	O-ring (Valve Housing) (High Temp)	032200-152
12	Thrust Washer (Thick)	400143
15	Thrust Bearing (2)	070027
16	Thrust Washer (Thin)	400144
17	Bearing Adjuster	400149
18	Adjuster Locknut	027007
27	Balls	216191-XI
29	Seal (Cap)	478042
30	Ball Return Guide Cap	400161
31	Torx Screws (2-Cap)	020228
32	Ball Return Guide Clip	402448
33	Hex Screws (2-Clip)	G179810
35	Grease Fitting	037027
43	Adjusting Screw (Sector Shaft)	021200
44	Retainer (Adjusting Screw)	062005
47	Jam Nut	G941 9666
49	Vent Plug (Side Cover)	036201
50	Bleed Screw (Manual)	213705
51	Plug (Auto Bleed)	021397
52A	Fixed stop screw	021426
54	Auxiliary Port Plug (2)	G941 0358
55	O-ring (2-Aux Port Plug)	032229
57	O-ring (Relief Valve)	032200-153
59	Service Poppet Adjusting Screw	021407
60	Service Sealing Jam Nut	025119

Parts Vary by Specification*

Item	Description
5	Valve Housing
13	Input Shaft, Valve, Worm Assy
13A	Input Shaft, Valve, Worm Assy. (Alt)"
14	Spacer Sleeve (Alt.)**
19	Rack Piston
34	Housing
42	Sector Shaft
46	Side Cover Assembly
56	Relief Valve Cap
58	Relief Valve (2 piece)

*Contact Service/Sales for part numbers
**Applicable to TAS65 gears only

Kits

Items	Description	Part Number
54 & 55	Port Plug & O-ring	415437-Al
56 & 57	Relief Valve Cap & O-ring	411061-Al
59 &60	Poppet Adj. Ser. & Jam Nut	021407-XI
	TAS40 Seal Kit	TAS400002
	TAS55 Seal Kit	TAS550002
	TAS65 Seal Kit	TAS650006
	TAS85 Seal Kit	TAS850002

Parts Vary by Gear Size

Item	Description	TAS40	TAS55	TAS65	TAS85
6	Seal Ring (Valve Housing)	032829	032829	032616	032834
20	Teflon Seal Ring	032828	032830	032590	032547
21	O-ring (Back up; Rack Piston)	032827	032831	032615	032556
22	Poppet Seat and Sleeve Assy. (2)	4091 18-A2	4091 18-A2	4091 18-A2	4091 18-A6
23	Poppet (2)	040210	040210	040210	040217
24	Poppet Spring	401662	401662	401662	401684
25	Spacer Rod	040209	040209	040209	040218
26	Push Tube	080154	080154	080154	080158
28	Ball Return Guide Halves (2) R H.	400158	400160	400156	400162
	L.H	400159	400165	400157	400163
36	Retaining Ring (2)	401674	401650	401650	401685
37	Roller Bearing	070028	071025	071020	072003
38	Dirt Seal	478052	478041	478041	478057
39	Dirt and Water Seal (Trunnion)	478053	478045	478045	478059
40	Washer (Spacer)	028527	028519	028519	028534
41	Seal (2-Output)	478051	478040	478040	478058
45	Gasket (Side Cover)	HFB529000	HFB649000	HFB649000	TAS859000
48	Special Bolts (6 or 8-Side Cover)	021277	G223734	G223734	G223734

Section 2 Initial Installation

installation..... 11

Poppet Setting ... .11

Maintenance Tips 12

Initial TAS Installation

- Bolt gear to frame, torque to vehicle manufacturer's recommendation,
- Connect return line to TAS return port.
- Connect hydraulic line from pump to pressure port in TAS unit,
- Connect steering column to input shaft, torque pinch bolt to vehicle manufacturer's recommendation.
- Install pitman arm on output shaft, torque bolt to vehicle manufacturer's recommendation,

Initial Poppet Setting

For this procedure to work correctly, you must have: A new gear received from TRW or your vehicle manufacturer's aftermarket system, **or** a used gear on which poppet seats have been replaced or reset during gear disassembly procedures, **ALSO:** Fixed stop screw Installed in housing, or poppet adjusting screw Installed so that it duplicates fixed stop screw length.

⚠ CAUTION **The axle stops and all steering linkage must be set according to vehicle manufacturer's specifications, and the pitman arm must be correctly aligned on the sector shaft for poppets to be set correctly.**

Full turn in one direction

1. With the engine at idle and the vehicle unloaded, turn steering wheel to full travel in one direction until axle stop contact is made. Maximum input torque to be applied during this procedure is 40 lb rim pull (178 N) on a 20 in, (508mm) diameter steering wheel.

NOTE If you encounter excess rim pull effort, allow vehicle to roll forward or jack up the vehicle at the front axle.

Full turn in other direction

2. Follow the same procedure while turning the steering wheel in the other direction, The poppets are now positioned to trip and reduce pressure as the steered wheels approach the axle stops in either direction,

Maintenance Tips

Never high-pressure wash or steam clean a power steering gear while on or off the vehicle. Doing so could force contaminants inside the gear and cause it to malfunction.

Make sure vehicle wheel cut or clearances meet manufacturer's specifications, and make sure pitman arm timing marks are aligned properly to **prevent internal bottoming** of the steering gear.

Regularly check the fluid and the fluid level in the power steering reservoir.

Keep tires inflated to correct pressure.

Never use a torch to remove pitman arm.

Investigate and immediately **correct the cause of any play, rattle, or shimmy** in any part of the steering system.

Make sure the steering column is aligned properly.

Encourage drivers to report any malfunctions or accidents that could have damaged steering components.

Do not attempt to weld any broken steering component. Replace the component with original equipment only

Do not cold straighten, hot straighten, or bend any steering system component.

Always **clean off around the reservoir filler cap** before you remove it Prevent dirt or other foreign matter from entering the hydraulic system.

Investigate and correct any external leaks, no matter how minor.

Replace reservoir filters according to requirements.

If you feel the vehicle is developing excessively **high hydraulic fluid temperatures,** consult with your vehicle manufacturer for recommendations.

Maintain grease pack behind the output shaft dirt and water seal as a general maintenance procedure at least twice a year, in the Spring and Fall. Grease fitting IS provided in housing trunnion. Use only NLGI grade 2 or 3 multipurpose chassis lube, and use only a hand operated grease gun on fitting. Add grease until it begins to extrude past the sector shaft dirt and water seal.

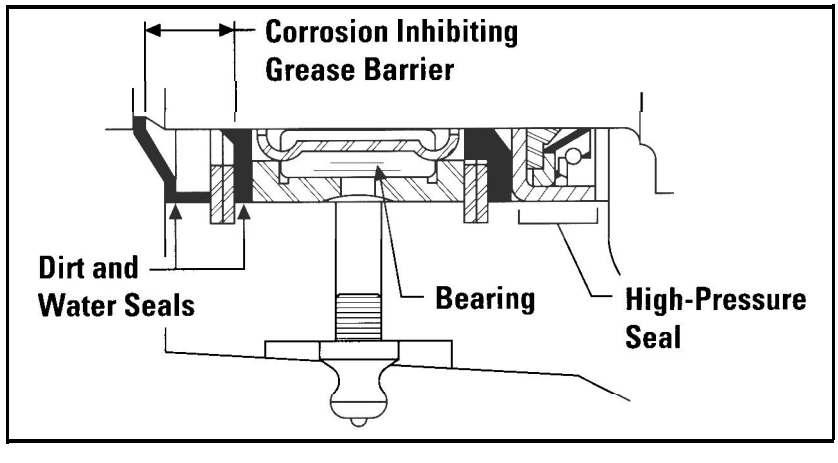

Section 3 On-Vehicle Service

Filling and Air Bleeding the System 13

input Shaft Seal Replacement 14

Sector Shaft Adjustment 18

Poppet Readjustment 20

Filling and Air Bleeding the System

Tools Required	Materials Required
5/16" Socket Lbf*in. Torque wrench	Hydraulic fluid

⚠ CAUTION **Make sure poppets are set correctly before beginning this procedure.**

Run engine for 10 seconds, turn off and fill reservoir

I Hydraulic fluid I

1. Fill the reservoir nearly full. Do not steer. Start and run the engine for 10 seconds, then shut it off. Check and refill the reservoir Repeat at least three times, checking the reservoir each time

⚠ CAUTION **Do not allow the fluid level to drop significantly or run out of the reservoir. This may induce air into the system.**

Run engine for2 minutes, turn off and fill reservoir

2. Start the engine and let it idle for 2 minutes, Do not steer, Shut off the engine and check the fluid level in the reservoir. Refill as required,

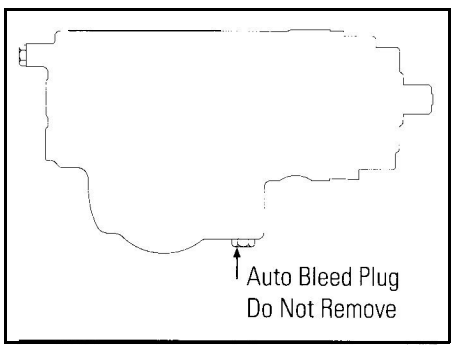

Steer vehicle

3. Start the engine again. Steer the vehicle from full left to full right several times, Add fluid, as necessary, to the full line on the dip stick,

Automatic bleed systems should now be free from trapped air, **Manual bleed systems continue with step 4.**

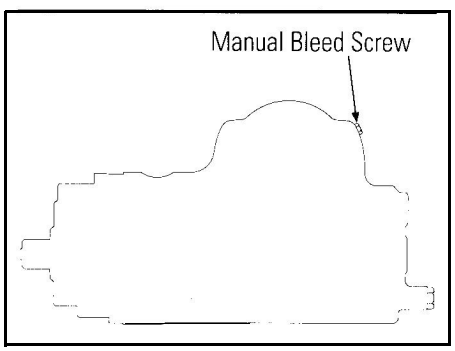

Allow air to bleed out from bleed screw

Lbf•in. Torque wrench
5/16" Socket

4. With engine idling, steer from full left turn to full right turn several times. Stop steering and loosen the manual bleed screw about one turn. Allow air and aerated fluid to "bleed out" until only clear fluid is seen. Close the bleed screw, refill the reservoir if required,

Repeat step 4 three to four times until all the air IS discharged, Torque manual bleed screw to 30 **lbf*in.**

⚠ CAUTION **Do not turn steering wheel with bleed screw loosened.**

Input Shaft Seal Replacement

Tools Required	Materials Required
Hammer J37073 Screwdriver	Clean cloth Drip pan High pressure fitting Hydraulic fluid Plug Shop towel

This procedure uses the vehicle's power steering pump to force out the input shaft seal. To use this procedure, the power steering pump should have a minimum of 1,500 PSI available.

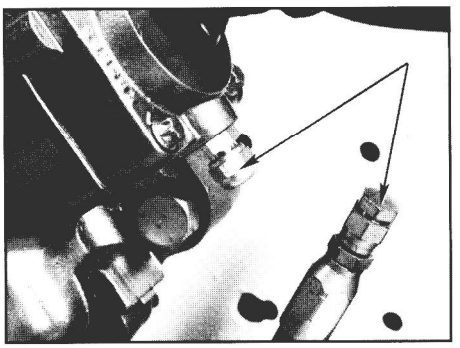

Disconnect return line

High pressure fitting
Plug

1. Disconnect return line from the steering gear and plug the line. Also cap the return port of the gear with a high pressure fitting.

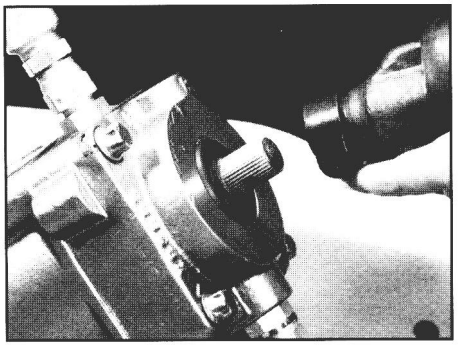

Disconnect column

2. Remove the steering column from the gear input shaft.

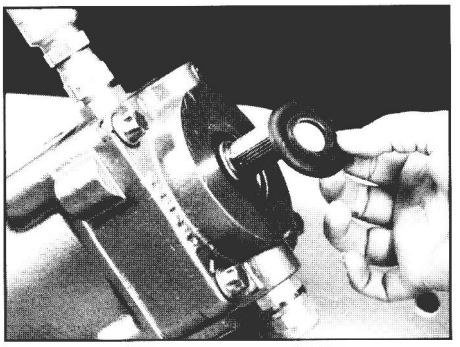

Remove dirt & water seal

3. Remove the dirt and water seal from the steering gear.

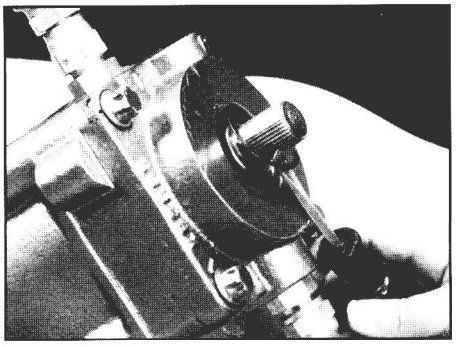

Remove retaining ring

Clean cloth
Screwdriver

4 Wipe out the grease and then remove the spiral retaining ring. Use a screwdriver Inserted into the notch formed in the end of the ring. Be careful not to scratch the bore with the screwdriver.

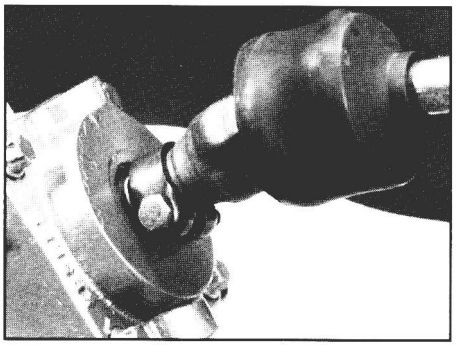

Replace column

5 Slip the steering column back onto the input shaft with the pinch bolt installed, but not tightened.

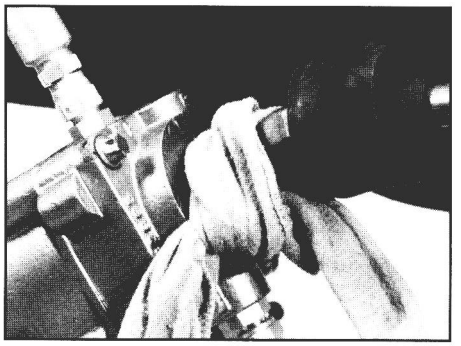

Wrap exposed area

6. Tie or wrap a shop towel around the input shaft area and place a drip pan under the vehicle to catch the oil.

Drip pan
Shop towel

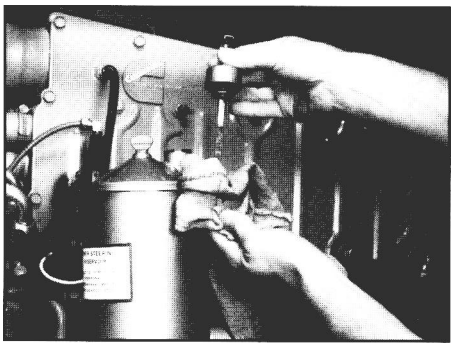

Fill reservoir

7. Add fluid as necessary, to the full line on the dipstick. Do not mix fluid types.

Hydraulic fluid

⚠ WARNING Any mixture of fluid types, or use of any unapproved fluid could lead to seal deterioration and leaks. A leak could ultimately cause the loss of fluid, which could result in a loss of power steering assist.

Force out the seal

8. With the vehicle in neutral, momentarily turn the starter (quickly turn off the engine if it starts).

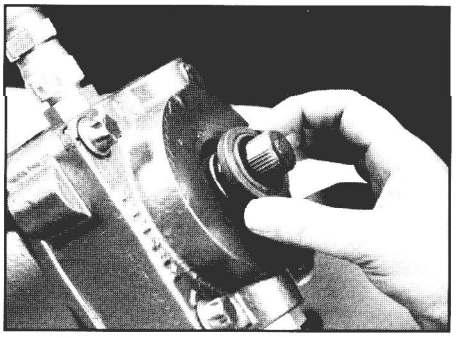

Remove input shaft seal

9. Remove the shop towel. Disconnect the steering column, and remove the input shaft seal.

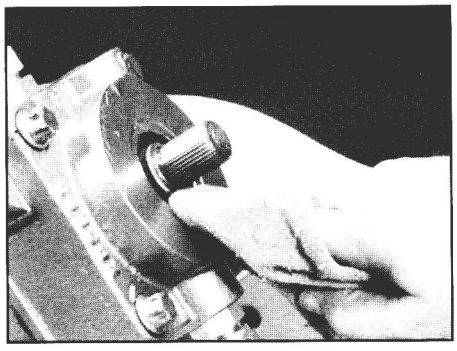

Inspect seal area

10. Check the seal area of the valve housing for any seal fragments, Remove any that are found.

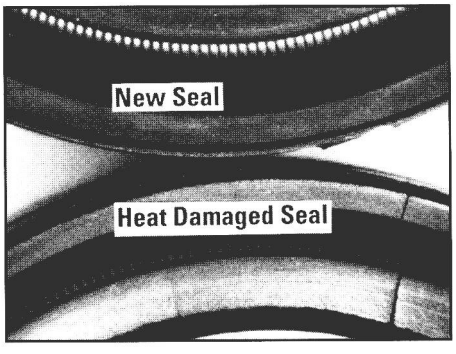

Inspect old seal

11. Check the seal for heat damage, If the seal is stiff and brittle, and not pliable like the new seal, it is probably heat damaged. Determine and fix the cause of excessive heat in the vehicle.

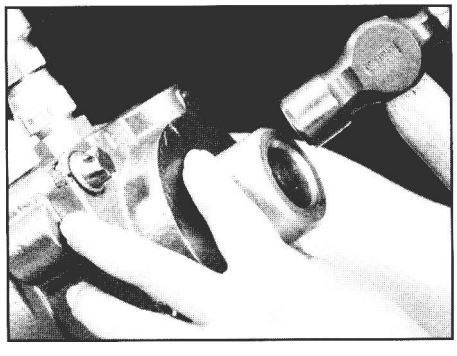

Install new seal

Hammer
J37073

12 Put clean grease (Mobil Temp' 1 or 2 or equivalent) on the inside dia. of the new input shaft seal, and place it over the input shaft. With the small dia. of tool J37073 against the seal, tap the tool until the tool shoulder is square against the valve housing Remove any seal material that may have sheared off in the seal bore or retaining ring groove.

⚠ CAUTION **Do not use a socket to install this seal because you will not be able to control seal installation depth, possibly causing a leak.**

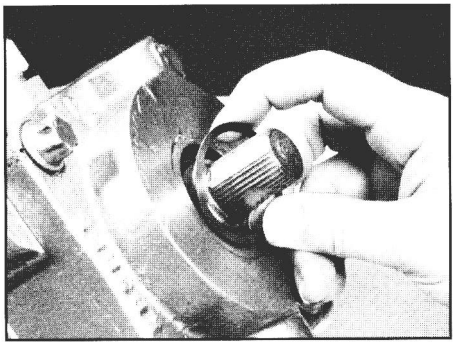

Install retaining ring

13. Insert new retaining ring into the groove

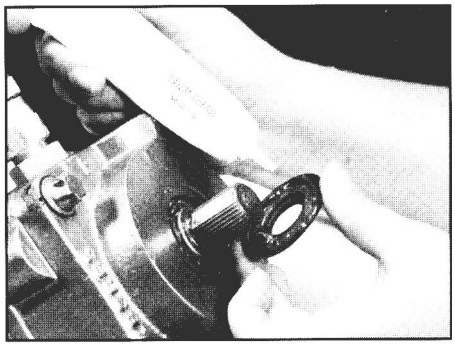

Install dirt& water seal

14. Pack the end of the valve housing bore around the input shaft with clean, high temperature industrial grease (Mobil Temp* 1 or 2 or equivalent). Apply more of the grease to a new dirt & water seal and install it over the input shaft. Seat it in the groove behind the serrations and against the valve housing.

*Trademark of Mobil 011 Corp.

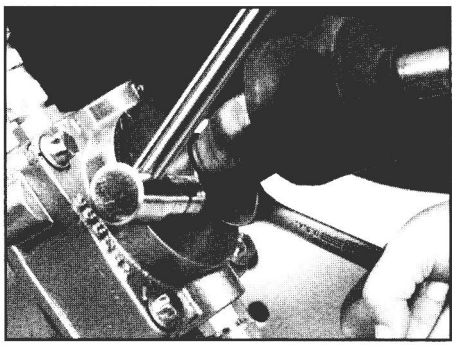

Reconnect column

15, Reconnect the steering column to the input shaft and tighten the pinch bolt to torque level specified

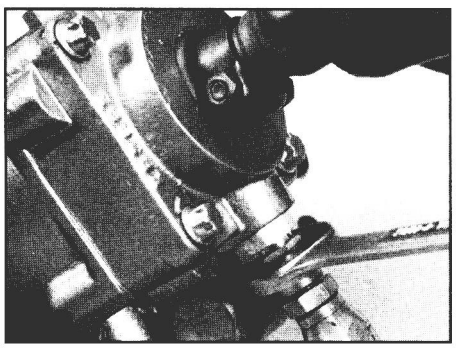

Reconnect return line

16. Reconnect the return line to the steering gear return port.

Air bleed system

17. Air bleed the system using the procedure on page 13.

Sector Shaft Adjustment

Tools Required	Materials Required
Screwdriver ¾" Socket ¾" Open end wrench	

This adjustment can only be completed on the vehicle if the adjusting screw jam nut is accessible. This nut is located on the side cover.

Photos in this section were taken on a mock frame rail for clarity.

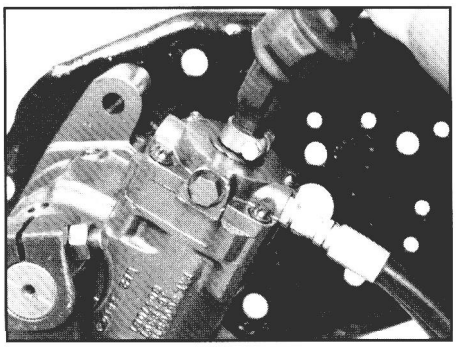

Center the sector shaft

1. With the engine off, rotate the steering wheel (input shaft) until the timing mark on the sector shaft lines up with the mark on the housing. The line on the sector shaft should be at a 90° angle from the input shaft. The sector shaft is now on its “center of travel”.

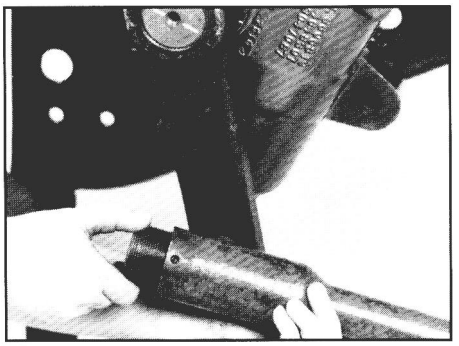

Remove the drag link

2. Remove the drag link from the pitman arm.

⚠ CAUTION **To avoid resetting the poppets, do not rotate the input shaft more than 1½ turns from the "center of travel" position while the drag link is disconnected.**

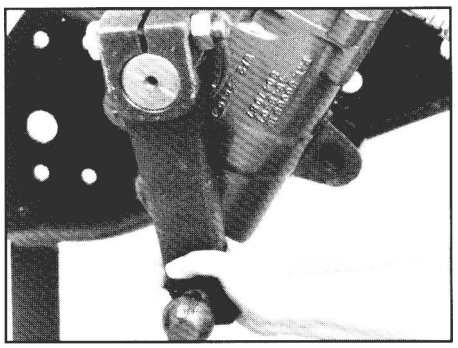

Check for sector shaft lash

3. From the “center of travel” position, grasp the pitman arm and gently try to rotate it. If looseness or lash is felt at this point, the sector shaft is out of adjustment.

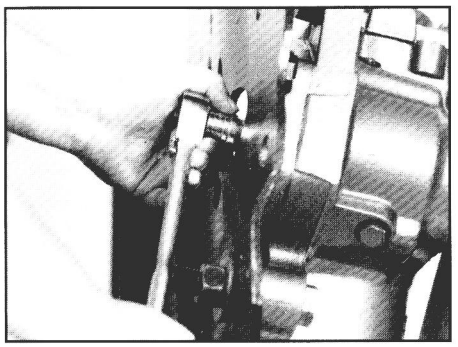

Loosen jam nut

¾" Socket

4. Loosen the jam nut

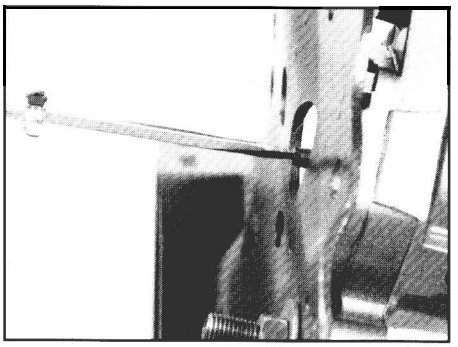

Position adjusting screw

Screwdriver

5 If no lash was detected in step 3, turn the shaft adjusting screw counterclockwise until you feel lash at the output shaft,

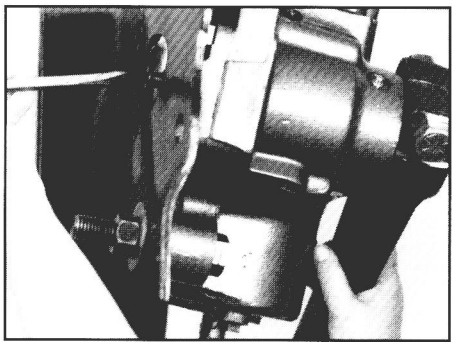

Adjust shaft

Screwdriver
¾" Open end wrench

6 Slowly turn the shaft adjusting screw clockwise until you feel no lash at the output shaft without using more than 10 lbf"ft (14 N-m) of torque, From this position, turn the screw clockwise ⅛ to 3/16 of a turn more. Hold the adjusting screw in place, and tighten the jam nut, **Final torque 43 lbf+t (58** N-m).

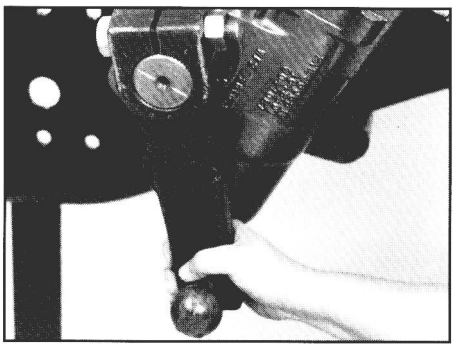

Recheck for lash

7 Turn the steering wheel 1/4 turn each side of center, then back to center and recheck the pitman arm for lash, You should feel no lash; if there IS lash, repeat steps 4, 6 and 7,

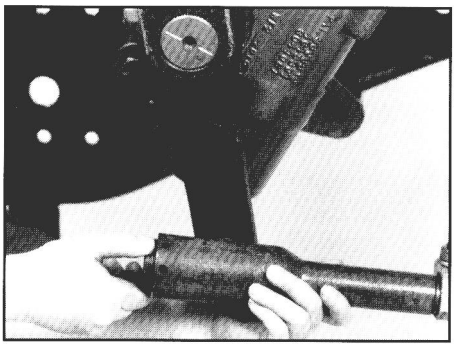

Connect drag link

8 Reconnect the drag link to the pitman arm according to manufacturer's specifications.

⚠ CAUTION **Maintain grease in the sector shaft bearing through the grease fitting in the housing using only a hand operated grease gun. Add grease until it begins to extrude past the dirt and water seal. Do not use a power grease gun because it will supply grease too fast this could adversely affect the high pressure seal and contaminate the hydraulic fluid.**

Poppet Readjustment

Tools Required	Materials Required
7/32" Allen wrench	Hydraulic fluid
5/8" Open end wrench	Jack
3/4" Open end wrench	
3/4" Socket	
Lbf*lb Torque wrench	

This resetting procedure will work in most cases with at least 1¾ hand-wheel-turns from each side of center. If you're making a large reduction in wheelcut and this procedure does not work, you may have to replace or internally reset the poppets using the procedure described in the Poppet Component section of this Service Manual

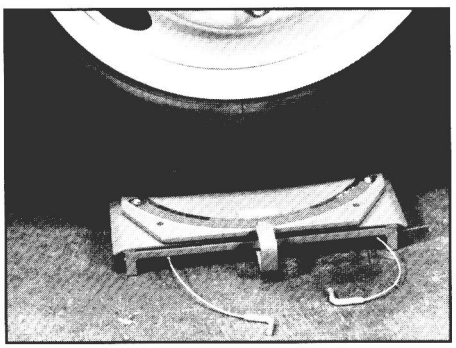

Set axle stops, warm-up system

1. Set the axle stops to vehicle manufacturer's wheelcut or clearance specifications.

   Start the engine and allow the vehicle to idle for 5-10 minutes to warm the hydraulic fluid. Shut off the engine.

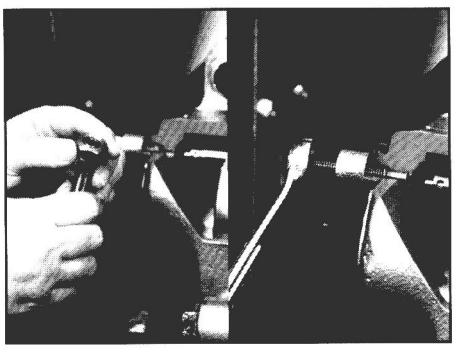

Assemble adjusting screw into nut

2. If a new poppet adjusting screw and nut are being used, turn the screw into the non-sealing end of the jam nut until the drive end of screw is flush with the nut.

   Your steering gear will have either a fixed stop bolt or an adjusting screw. If the adjusting screw is already part of the steering gear, back the nut off of the adjusting screw until it is flush with the end of the adjusting screw.

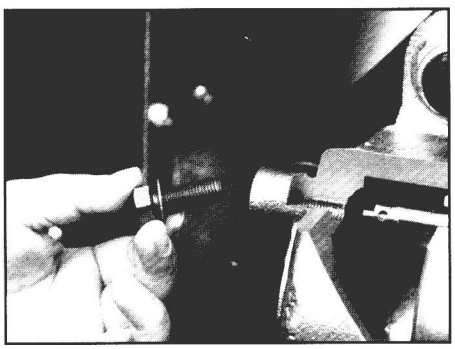

Remove poppet stop bolt

5/8" Open end wrench

3, Make sure the engine is off and the road wheels are in straight ahead position. Remove and discard the poppet fixed stop bolt (if equipped) and washer (if equipped) from the lower end of the housing.

If the unit has a poppet adjusting screw and sealing nut that need to be replaced, remove and discard them.

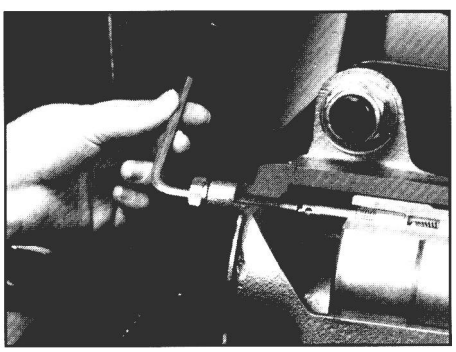

Turn adjusting screw assembly into housing

7/32" Allen wrench

4. Turn the adjusting screw and sealing nut assembly, without rotating the nut on the screw, into the housing until the nut is firmly against the housing using a 7/32" Allen wrench. Tighten the sealing nut against the housing.

⚠ CAUTION **If the drive end of the screw is below the face of the nut, the popet seat flange will break during step 7d.**

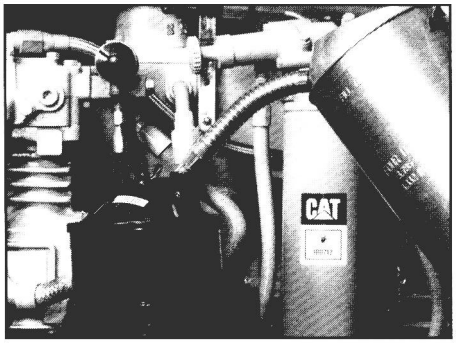

Refill reservoir 5.

Hydraulic fluid

Refill the system reservoir with approved hydraulic fluid.

⚠ CAUTION **Do not mix fluid types. Mixing of transmission fluid, motor oil, or other hydraulic fluids will cause seals to deteriorate faster.**

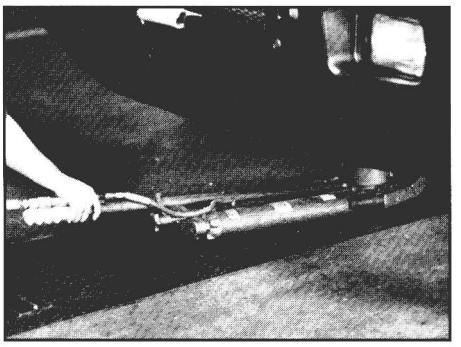

Jack up vehicle 6.

Jack

Place a jack under the center of the front axle and jack up the front end of the vehicle so the steer axle tires are off the ground.

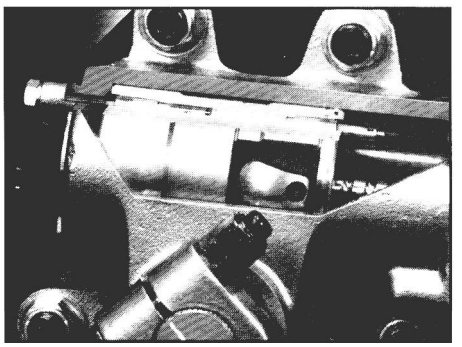

Push upper poppet out to prepare it for setting 7,

a) Start the engine and let it run at idle speed,

b) Note which output shaft timing mark is nearest the housing piston bore,

c) Turn the steering wheel in the directlon that makes this timing mark move toward the adjusting screw just Installed. Turn in this direction until axle stop contact is made.

d) Pull hard on the steering wheel (put up to 40 lb rim pull on a 20” dia. steering wheel) after the axle stop is contacted.

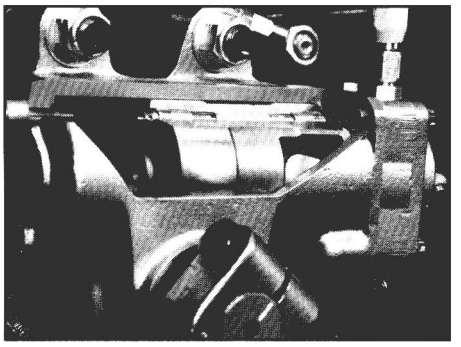

Set upper poppet 8.

a) Turn the steering wheel in the opposite direction (end of timing mark away from adjusting screw) until the other axle stop is contacted.

b) Pull hard on the steering wheel (put up to 40 lb rim pull on a 20” dia. steering wheel).

c) Release the steering wheel and shut off the engine.

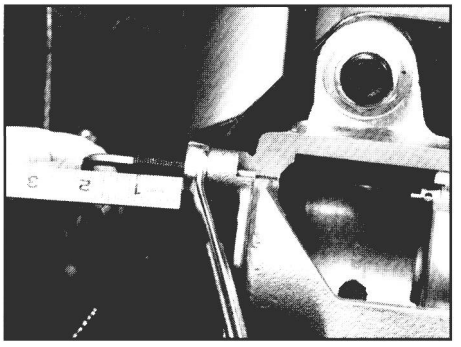

Back out adjusting screw 9

7/32" Allen wrench
3/4" Open end wrench

Loosen the sealing nut and back out the adjusting screw until 1“ is past the nut, Tighten the sealing nut against the housing.

⚠ CAUTION **Do not hold the steering wheel at full turn for more than 10 seconds at a time; the heat build-up at pump relief pressure may damage components.**



Set lower poppet

10. **a)** Start the engine and let it idle

b) Turn the steering wheel in the original direction (end of timing mark toward adjusting screw), until axle stop contact is made.

c) Hold the steering wheel in this position (with up to 40 lb rim pull) for 10 seconds, then release. Repeat this hold and release process as many times as necessary while completing step 11.

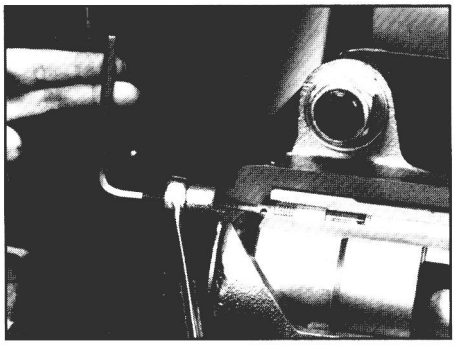

Position adjusting screw

7/32" Allen wrench
3/4" Open end wrench
3/4" Socket
Lbf•ft Torque wrench

11. **a)** With steering wheel held tightly at full turn loosen the jam nut and hold it in place with a wrench.

b) Turn the adjusting screw in (clockwise) using **finger-pressure only (don't use a ratchet),** until the Allen wrench stops. Do not attempt to turn it in further. Pause the turning-in process each time the driver releases the steering wheel; continue turning only while the wheel is held at full turn.

c) Back off the adjusting screw 3¼ turns and tighten the sealing nut. Torque sealing nut to **35 lbf•ft**

The procedure is complete

12. The poppets have now been completely reset. Lower the vehicle, Check the reservoir and fill if required.

⚠ WARNING **The length of the adjusting screw beyond the nut must be no more than 1'/16" for proper thread engagement.**

NOTE The length of adjusting screw beyond the sealing nut may be different for each vehicle.

Dual System

TAS Gear with Linear Cylinder:

Reset the TAS gear using the procedures described above

TAS Gear with Rotary Cylinder:

Back out the poppet adjusting screws (leave any fixed stop bolts in place) on the assist cylinder as follows:

RCS Rotary - 1" to 1 1/16" of poppet adjusting screw protruding beyond the nut

RCB Rotary - Back both screws out completely, then screw back in 10-12 turns.

Set the main TAS gear using the procedures described above. Leave adjusting screws on rotary cylinders in place as described above after poppets on main gear have been reset.

Section 4 Reseal & Repair

Disassembly 23

inspection 3l

Assembly 33

Internal Damage Repair (by reference)

Poppet Component Replacement 4l

Valve Housing Worm Screw Disassembly 43

Roller Bearing or Retaining Ring Replacement 50

Replace Housing Ports, Plugs, Screws, Fittings 51

Final Adjustments 52

Disassembly Preparation

Stop the vehicle with wheels pointed straight ahead,

Clean off all outside dirt from around fittings and hose connections before you remove the gear,

Remove input and output shaft connections per vehicle manufacturer's instructions

⚠ WARNING **When using a chisel to spread a pinch bolt-type pitman arm boss for assembly or removal from the shaft, maintain a firm grip on the chisel at all times. Failure to do this may result in the chisel flying loose which could cause an injury. Never leave the chisel wedged in the pitman arm boss. If you cannot remove the pitman arm from the shaft with a chisel and your hands, remove the chisel from the arm boss and use a puller only to remove pitman arm.**

⚠ CAUTION **Do not use a hammer on the pitman arm to remove it from sector shaft as internal damage to steering gear could result. Be sure there is no spreading wedge left in the pitman arm boss before tightening pitman arm clamp bolt after assembly on sector shaft. Do not pound the universal joint or input shaft coupling on or off the input shaft as internal damage to the steering gear can result.**

⚠ CAUTION **Unless the poppet adjuster seat and sleeve assemblies (22) are to be removed and replaced or reset for automatic poppet adjustment, or a manual adjustment with a service poppet adjuster screw (59) and nut (60) is anticipated, do not allow the input shaft on a steering gear with the automatic poppet adjustment feature to rotate more than 1.5 input shaft revolutions from "straight ahead position" when the output shaft is disconnected from the vehicle steering linkage; this could disrupt the poppet setting achieved at initial installation. The steering gear is in the "straight ahead position" when the timing marks on the end of the housing trunnion and sector shaft are aligned.**

Remove the supply and return lines from the gear, and immediately plug all port holes and fluid lines

⚠ WARNING **TAS steering gears can weigh up to 110 pounds dry. Exercise caution when you remove, lift, carry, or fix in a bench vise.**

Remove the steering gear from the vehicle and take it to a clean work surface.

Clean and dry the gear before you start to disassemble it.

As you disassemble the gear, clean all parts in clean, OSHA approved solvent, and air blow-dry them only.

⚠ WARNING **Because they are flammable, be extremely careful when using any solvents. Even a small explosion or fire could cause injury or death.**

⚠ WARNING **Wear eye protection and be sure to comply with OSHA or other maximum air pressure requirements.**

⚠ CAUTION **Never steam clean or high-pressure wash hydraulic steering components. Do not force or abuse closely fitted parts. Use care that bearing and sealing surfaces are not damaged by the assembly and disassembly procedures.**

Keep each part separate to avoid nicks and burrs.

Discard all seals, o-rings, and gaskets removed from the gear. Replace them with new parts only.

The steering gear should be identified to the vehicle from which it was removed, The poppet adjuster seat and sleeve assemblies are set for that particular vehicle only.

Disassembly

Tools Required		Materials Required
Allen wrenches	Screwdriver	Emery cloth
Pocket knife	Sockets:	Masking tape
Ratchet	● Standard	
Rolling head pry bar	● Torx	
	Vise	
Rubber mallet		

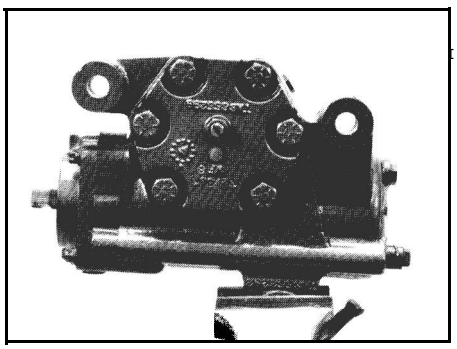

Position gear in vise

1. Put the steering gear in a vise, clamping firmly against the housing mounting flange or boss. Input shaft should be horizontal; side cover and valve housing are accessible for disassembly.

⚠ CAUTION **Do not clamp against body of housing. If mounting boss or flange is not accessible, fabricate and attach a mounting plate to the housing mounting bosses.**

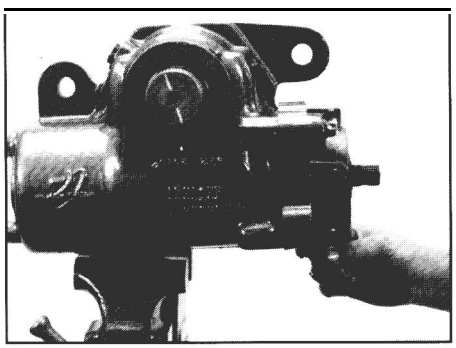

Unplug ports

Appropriate size socket or open-end wrench

2. Prepare for fluid drainage and unplug hydraulic ports.

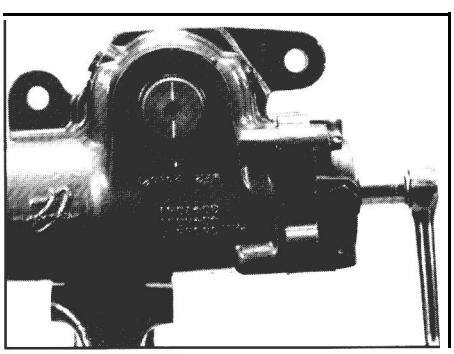

Position sector shaft

3. Rotate the input shaft until the timing mark on the end of the sector shaft is in line with the timing mark on the end of the housing This will position the sector shaft for removal.

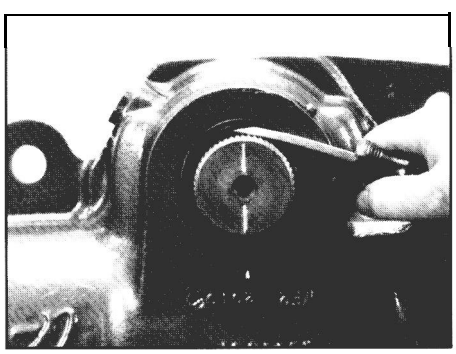

Remove dirt & water seal

Small screwdriver

4. Remove and discard dirt & water seal (39) from the housing trunnion.

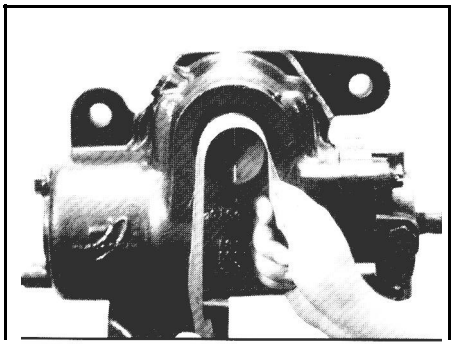

Clean sector shaft 5

Fine grade emery cloth

Remove any paint or corrosion from the exposed area of the sector shaft (42).

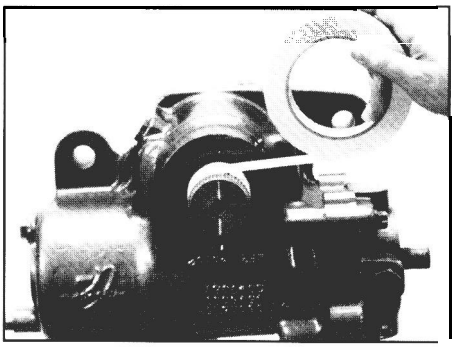

Tape sector shaft 6

Masking tape

Tape the serrations and bolt groove of the sector shaft with one layer of masking tape. The tape should not extend onto the sector shaft bearing diameter.

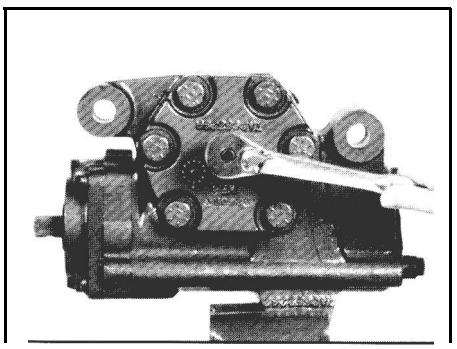

Remove jam nut 7.

3/'' Socket

Remove the sector shaft adjusting screw jam nut (47).

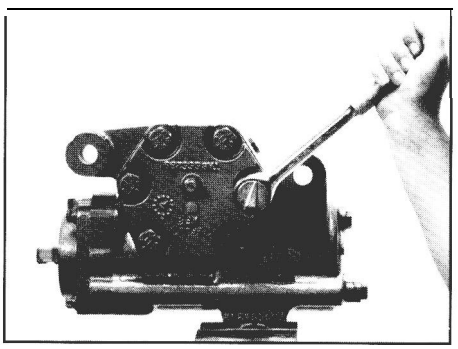

Remove side cover bolts 8

15/16" Socket or 13/16" Socket

Be prepared for more fluid drainage and remove the six or eight special bolts (48) from the side cover (46)

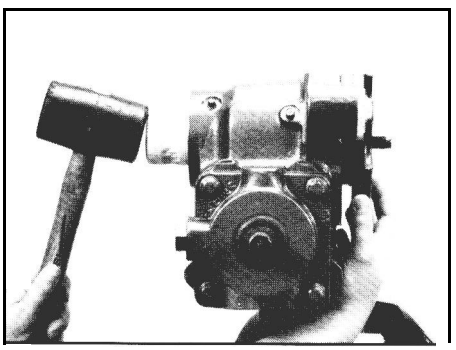

Remove side cover 9

Soft mallet

Be prepared for more fluid drainage and remove the side cover and sector shaft assembly from the gear, You may start the shaft and cover assembly removal by tapping the end of the shaft lightly with a soft mallet or wooden hammer handle,

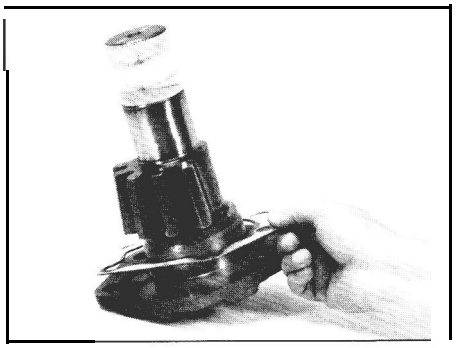

Discard gasket

10. Remove and discard the side cover gasket (45).

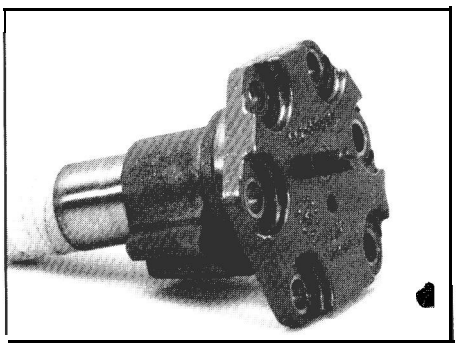

Remove vent plug

11. Remove and discard the vent plug (49).

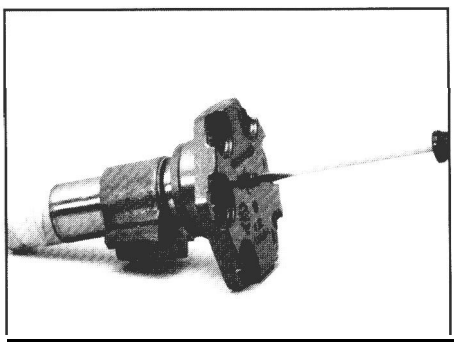

Remove sector shaft from cover

Screwdriver

12. Screw sector shaft adjusting screw (43) clockwise through the side cover and pull the sector shaft out of the side cover.

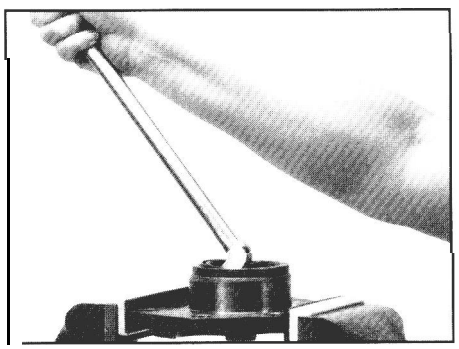

Remove side cover seal

⅜" Drive socket
Rolling head pry bar

13. **⚠ CAUTION** **Don't damage the bore or DU bushing when removing the seal. TAS85 gears are not equipped with the DU bushing.**

Clamp the side cover in a vise. Place a standard ⅝" or 11/16" - ⅜ drive socket in the center of the side cover. pry the seal out with a rolling head pry bar, using the socket for support. Discard the seal and remove the socket.

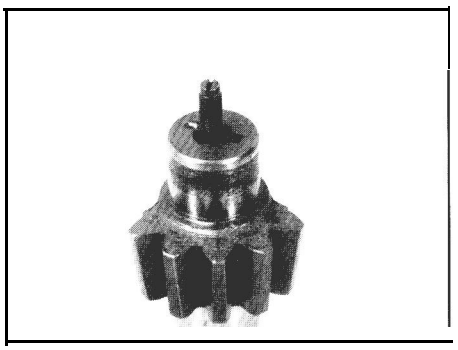

Inspect adjusting screw and retainer

14. Inspect the sector shaft assembly for damaged adjusting screw threads. The retainer (44) must be securely staked in place The adjusting screw must rotate by hand with no perceptible end play (lash)

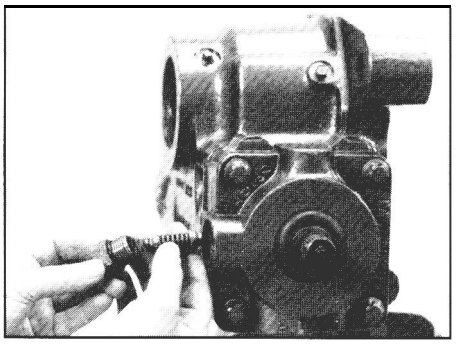

Remove relief valve components

7/8" Socket

15. If equipped, remove relief valve cap (56), o-ring (57) and two-piece relief valve (58) from the valve housing. Discard the o-ring.

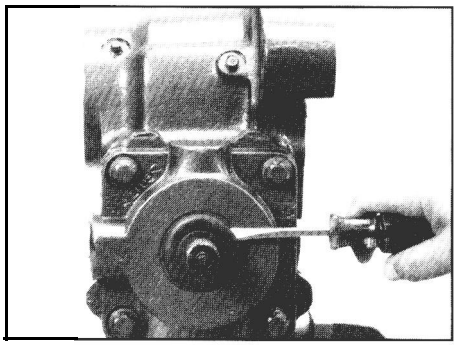

Remove dirt & water seal

16. Remove and discard the dirt & water seal (2) from the input shaft (13 or 13A)

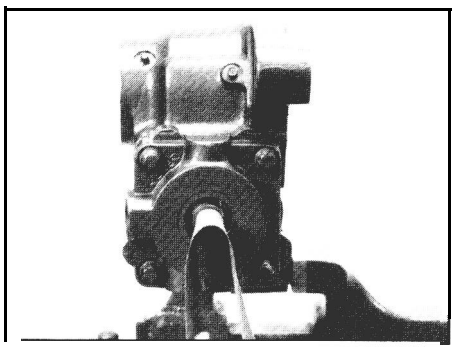

Clean input shaft

Fine grade emery cloth

17, Clean any paint or corrosion from the exposed area of the input shaft.

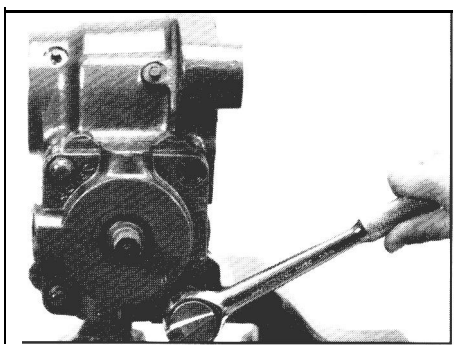

Remove valve housing bolts

Torx socket E-16 or E-18

18. Remove the four torx head valve housing bolts (1),

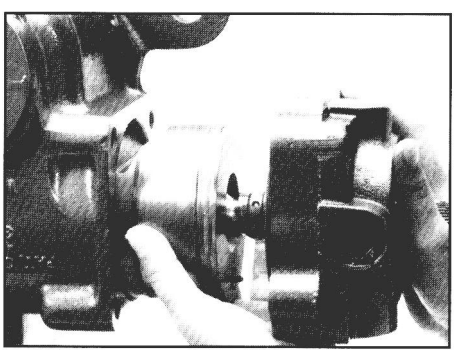

Remove valve housing, worm and rack subassembly

19. Be prepared for more fluid drainage and remove the rack piston subassembly. Place the assembly on a clean cloth. For the TAS85 it may help to rotate the input shaft to move the rack piston toward the lower end of the housing. This will force the valve housing to exit the main housing.

⚠ CAUTION **The set position of poppet seat and sleeve assemblies (22) must not be disturbed if the poppets are not going to be replaced or reset during disassembly.**

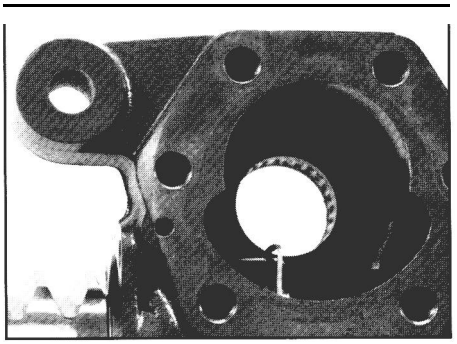

Pocket knife

19A. **NOTE** If your gear is short "V" construction, the rack piston seal is on the end of the rack piston farthest from the input shaft. Remove the seal before removing the valve housing assembly to prevent the Teflon rack piston seal ring (20) from “hanging up” when it exits the housing. Expose the seal through the sector shaft cavity, then cut and remove the seal ring from the rack piston.

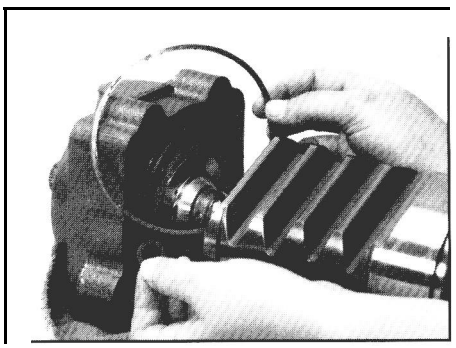

Remove seals

20 Remove and discard the valve housing seal rings (6 &7).

⚠ CAUTION **Do not remove the input shaft, valve worm assembly or balls from the rack piston until the ball return guides are removed as damage to the ball guides will occur.**

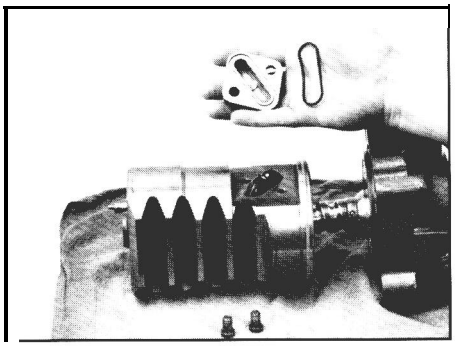

Remove ball return guide cap

5/32" Allen wrench or T-30 Torx wrench

21 Remove and discard the two special sealing screws (31). Remove the ball return cap (30) and cap seal (29), discard the seal.

O R

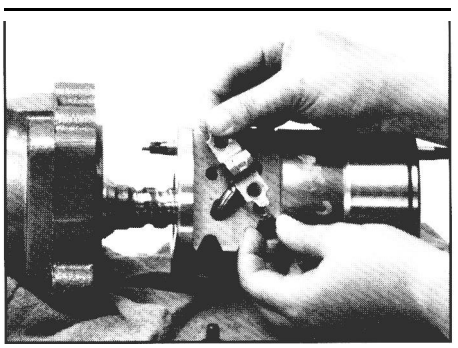

Remove ball return guide clip

½" Socket

21A. Bend down the two tabs (tangs) that are against the hex head bolts (33). Remove two bolts and the clip (32). Discard the clip.

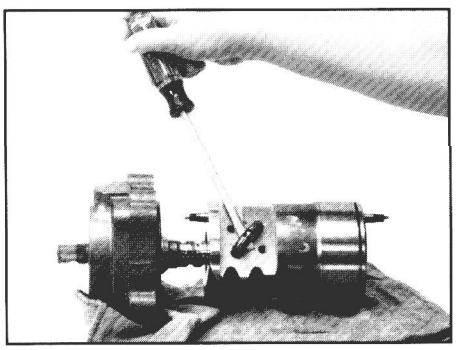

Remove ball return guides

Screwdriver

22. Make sure the rack piston is on a cloth so the steel balls that fall out won't roll very far. Remove ball return guide halves (28) by carefully Inserting a screwdriver between the rack piston and guides.

NOTE Left hand ball return guide halves are copper plated for identification and right hand guides are not plated.

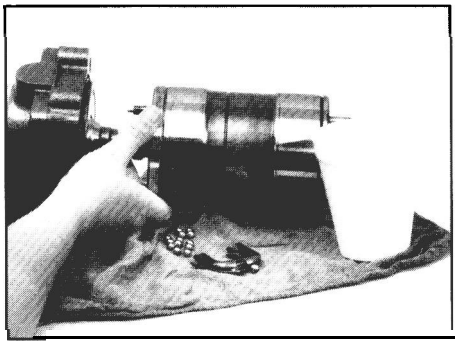

Remove steel balls

23. Remove the steel balls (27) from the rack piston (19) by rotating the input shaft, valve worm assembly until the balls fall out. Place the balls and return guides in a cup or other container. Count the balls, and make sure all have been removed.

> **⚠ CAUTION** **The steel balls are a matched set. If any are lost, the set must be replaced by service balls. Number or factory balls installed: TAS40-29, TAS55-31 (30 if date code is 337-89 or earlier), TAS65-32, TAS85-34.**

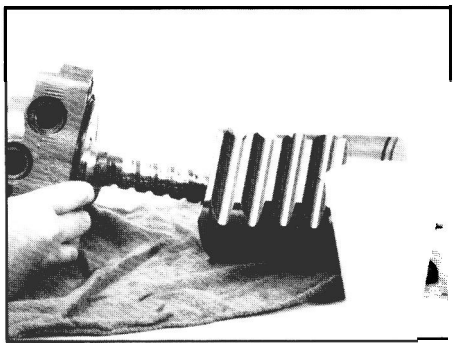

Separate rack piston from worm subassembly

24. Remove the input shaft, valve/worm, valve housing subassembly from the rack piston.

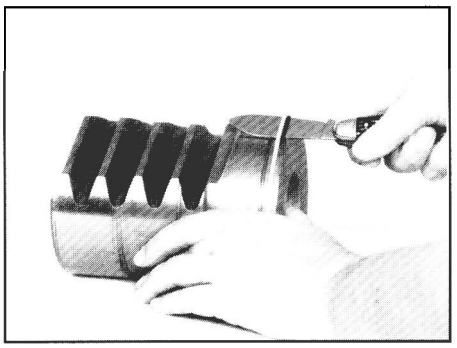

Remove seal ring and o-ring

Pocket knife

25 Cut and remove the Teflon seal ring (20) and o-ring (21) from the rack piston if not removed during disassembly step 19A.

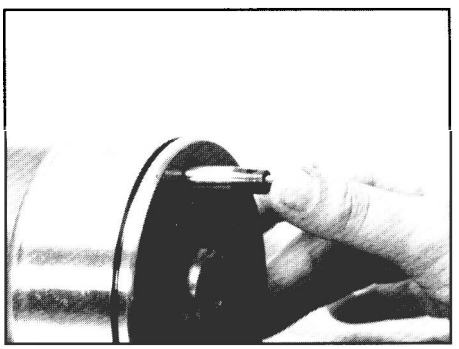

Inspect poppet assemblies

26 Push poppet stems, they should spring back. Push poppet seat, it should not move by hand. If components are bent or broken, poppet stems don't spring back, or poppet seat moves by hand, go to **Poppet Component Replacement** section on page 41. Otherwise, proceed to step 27.

> **NOTE** TRW recommends the poppet adjuster seat and sleeve assemblies (22) not be removed unless replacement of poppet components is required.

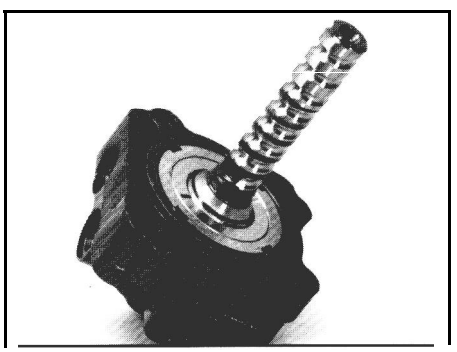

Inspect valve housing and worm screw

27 Inspect valve housing/worm screw subassembly for heat damage or bearing roughness, If these conditions are present, or if there was excessive internal leakage, or if preload adjustment is required, go to **Valve Housing/Worm Screw Disassembly** procedures on page 43. If not, proceed to step 28.

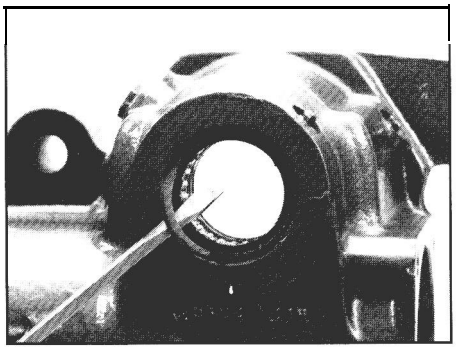

Remove retaining ring

Screwdriver

28. Remove the retaining ring (36) that is closest to the output end of the housing trunnion.

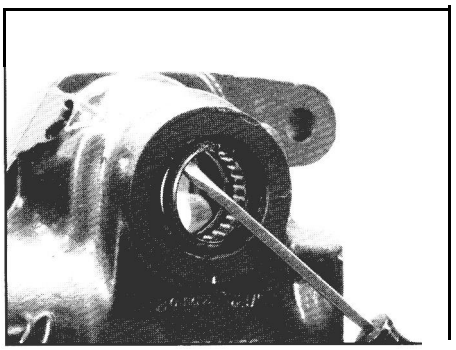

Remove dirt seal

lScrewdriver

29. Remove and discard dirt seal (38)

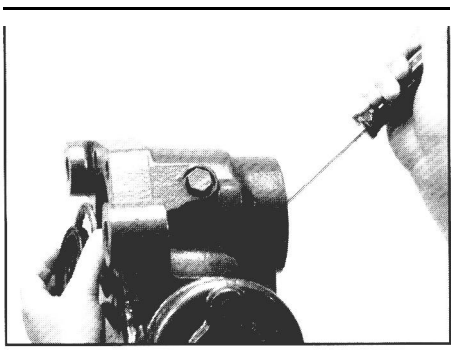

Remove pressure seal and spacer washer

Screwdriver

30. Insert a screwdriver into housing bearing bore from the trunnion end and carefully push seal (41) and spacer washer (40) out of the other end of bearing bore without damaging the sealing area of the bore or the spacer washer. Discard the seal

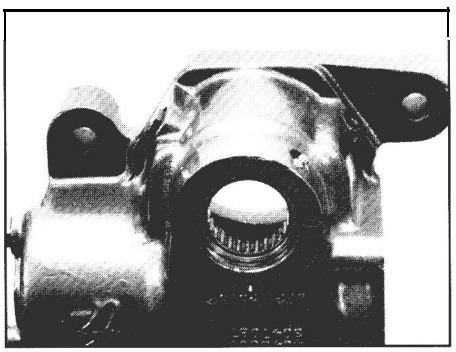

Inspect roller bearing

31 Inspect roller bearing (37) in the housing for brinellinq or spalling. Inspect retaining ring tor damage: If replace-merit of either part ıs required, go to **Roller Bearing or Retaining Ring Replacement** on page 50. If not, proceed to step 32.

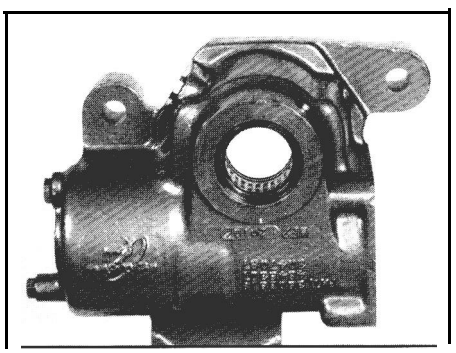

Inspect housing screws, and plugs

32. Inspect the following for damage:

- Poppet fixed stop screw (52 or 52A) and washer (53) if equipped.
- Poppet adjusting screw (59) and sealing nut (60)

.Auto-bleed plug (51)

- Manual bleed screw (50)
- Auxlllary port plugs (54) and o-rings (55)

If any are damaged, go to **Replace Housing Ports, Plugs and Screws** on page 51. If not, proceed to the Inspection Section.

Inspection

Make sure all sealing surfaces and seal cavities are free from nicks and corrosion. Any nicked or corroded surface requires part replacement to ensure proper sealing.

Wash all parts in clean, OSHA approved solvent. Air blow them dry only

⚠ WARNING **Because they are flammable, be extremely careful when using any solvents. Even a small explosion or fire could cause injury or death.**

⚠ WARNING **Wear eye protection and be sure to comply with OSHA or other maximum air pressure requirements.**

⚠ WARNING **Any of the following conditions present in the steering gear indicates impact damage.**

Condition	Area
Brinelling	• Ball track grooves of rack piston • Ball track grooves of worm screw • Bearing area of sector shaft • Thrust washers and bearings in valve housing
Cracks or Breaks	• Bearing area of sector shaft • Sector shaft teeth • Rack piston teeth • Housing • Thrust washers and bearings in valve housing • Worm screw
Twisted serrations	• Output shaft serrations

If one of these conditions is found in one component, be sure to inspect all components carefully for signs of impact damage. Replace components noted in individual inspection steps below if you suspect impact damage. Failure to replace all damaged components could result in a serious vehicle accident.

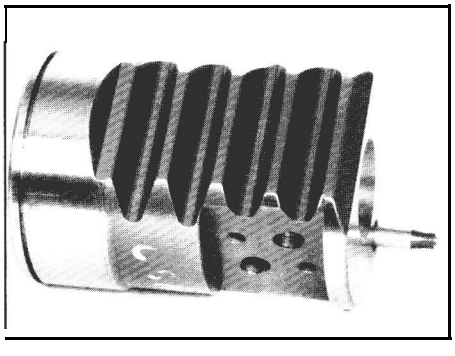

Inspect rack piston teeth 1.

Inspect the rack piston (19) teeth for cracks or obvious damage. If teeth are damaged, replace the rack piston, sector shaft (42) and set of balls (27)

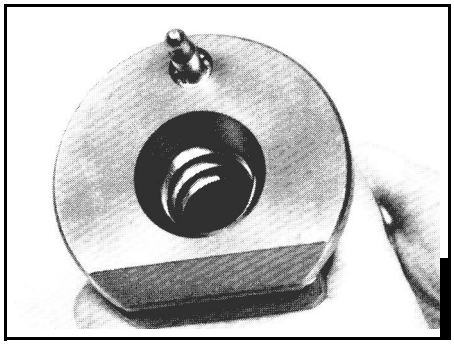

Inspect rack piston ball track grooves 2.

Inspect the rack piston (19) ball track grooves for brinelling or spalling. If either condition exists, replace the input shaft, valve/worm assembly, valve housing, rack piston subassembly and balls.

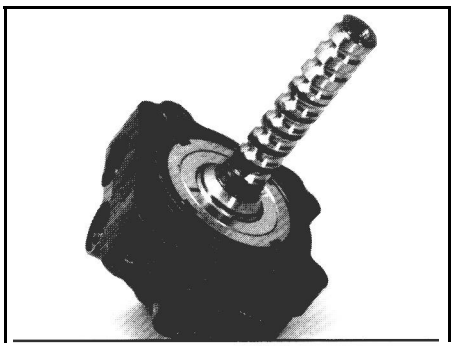

Inspect input shaft, valve/worm assembly sealing areas

3. Inspect the sealing area of input shaft and valve (13 or 13A) for recks, and damage. Inspect for discoloration from excess heat. Inspect input shaft ball-track grooves for brinelling or spalling. If any of these conditions exist, replace the input shaft, valve worm assembly, valve housing and balls. Also replace rack piston if brinelling or spalling is found.

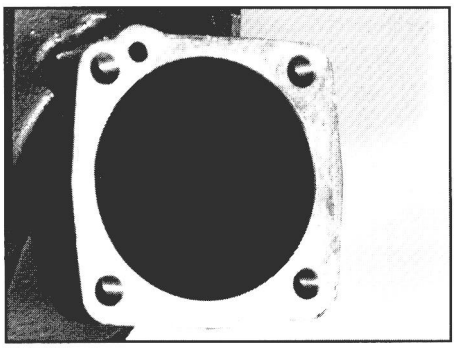

Inspect housing cylinder bore

4. Inspect the housing (34) cylinder bore. some scoring marks are normal, If there was internal leakage greater than 1 gal/rein, make sure there are no damaged seals before replacing the housing.

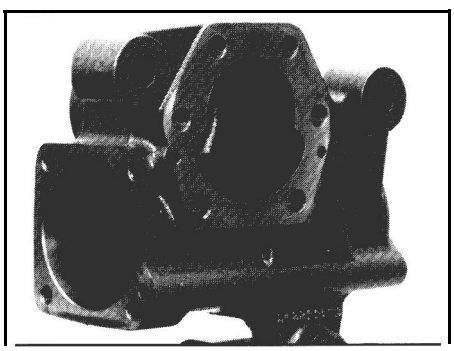

Inspect housing faces

5 Inspect the housing faces for recks that would prevent proper sealing Replace the gear housing if these recks are present and cannot be easily removed with a fine-tooth flat file without changing the dimenslonal characteristics.

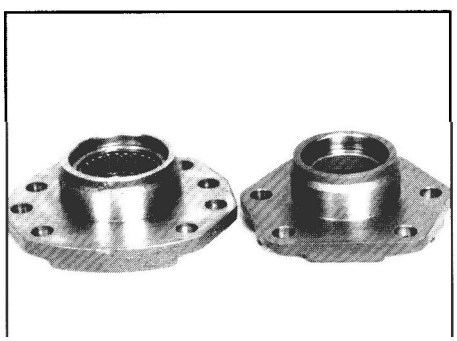

Inspect side cover bushing/bearing

6 **TAS40, 55,65:** Inspect side cover (46) DU bushing for damage Also check side cover bushing to sector shaft clearance. If damage exists, or if clearance exceeds 008” (0.20 mm) replace .side cover/bushing assembly.

TAS85: Inspect roller bearing in side cover assembly (46) for brinelling or spalling. If either condition exists, replace the side cover and bearing assembly.

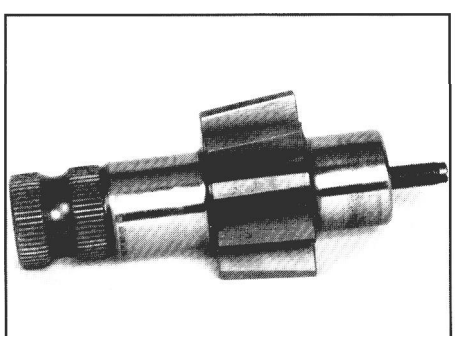

Inspect sector shaft assembly

7. Inspect the sector shaft (42) bearing and sealing areas and sector teeth contact surfaces for brinelling, spalling or cracks. Run your fingernail edge across these areas to detect steps. Remove masking tape from the shaft and Inspect for twisted or otherwise damaged serrations. If any of these conditions exist, replace the sector shaft.

NOTE	A service sector shaft will come assembled with the adjusting screw (43) and retainer (44).

Assembly Preparation

Wash all parts in clean, OSHA approved solvent. Air blow-dry them only

⚠ WARNING **Because they are flammable, be extremely careful when using any solvents. Even a small explosion or fire could cause injury or death.**

⚠ WARNING **Wear eye protection and be sure to comply with OSHA or other maximum air pressure requirements.**

Replace all seals, seal rings, and gaskets with new ones each time you disassemble the gear

TRW Commercial Steering Division does provide indivisual seals, seal rings, and gaskets, as well as complete seal kits. These parts should be available through most OEM parts distributors. Contact your local dealer for availability.

Assembly

Tools Required			Materials Required	
5/32" Allen wrench	J37071 (TAS55/65)	Sockets	ATF oil	Seal kit: Ross TAS400002
Lbf*ft Torque wrench	J38779 (TAS85)	Torx sockets	Grease (Mobil Temp* 1 or 2 or equivalent	TAS550002
Hammer	Press	Vise		TAS650006
J37705 (TAS40)	Punch			TAS850002
	Ratchet		Masking tape	
	Screwdriver		7/16"-14 x 7¼" All Thread	

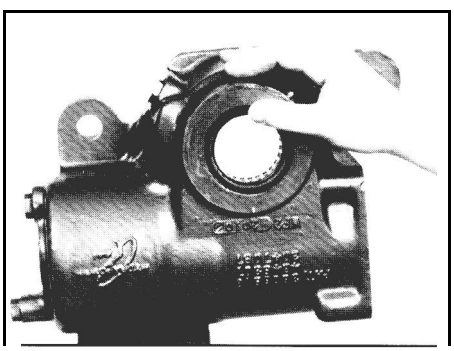

Install dirt seal

1. Install new dirt seal (38) into the trunnion end of housing sector shaft bore and against bearing with the seal lip out.

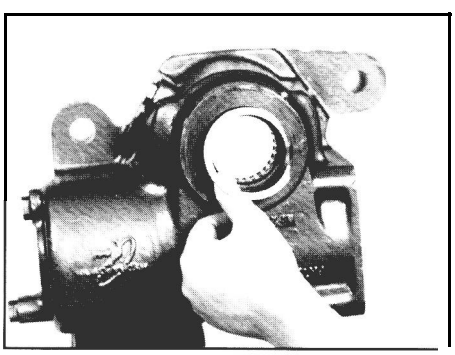

Install retaining ring

2 Install the second retaining ring (36) seating it firmly in the housing retaining ring groove.

*Trademark of Mobil Oil Corp.

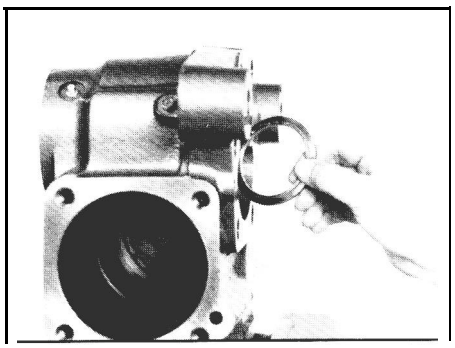

Install washer

3. Install washer (40) into the side cover side of housing seal bore with small diameter piloted into retaining ring

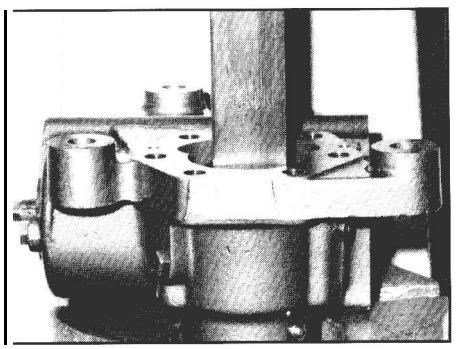

Press seal into housing

J37705 (TAS40)
J37071 (TAS55/65)
J38779 (TAS85)
Press

4. Assemble new seal (41) onto bearing and seal tool so the lip with the garter spring is toward the shoulder of the tool.

Working from the side cover side of the housing, pilot the seal tool into the washer and bearing and press with a force of 100-800 lb (445-3,560 N) until the seal is seated against washer.

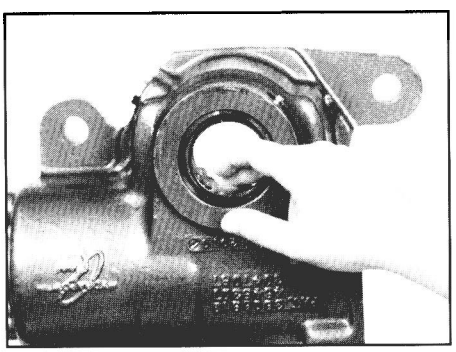

Pack bearing area with grease

Grease

5. Liberally pack the area between dirt seal (38) and pressure seal (41) including roller bearing with clean, high temperature industrial grease, Mobil Temp* 1 or 2 or equivalent.

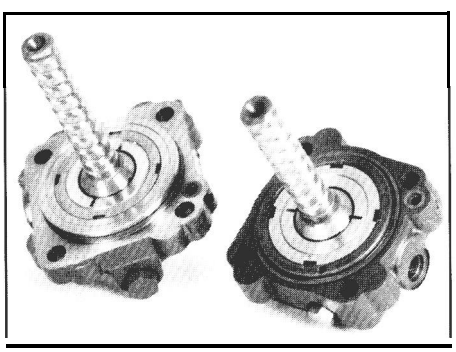

Assemble seal rings

6. Lightly 011 new seal ring (7) and assemble in valve housing mounting face groove

TAS40, 55,65: Oil new seal ring (6) and assemble in valve housing mounting face groove

TAS85: 0il new seal ring (6) and assemble in valve housing pilot groove.

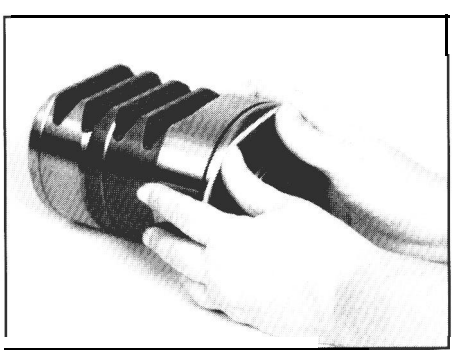

Install rack piston o-ring and seal ring

7. Install a new backup o-ring (21) and then a new Teflon seal ring (20) on rack piston (1 9), Do not over-stretch these rings as you install them. Do not allow the Teflon seal ring to be twisted.

*Trademark of Mobil Oil Corp

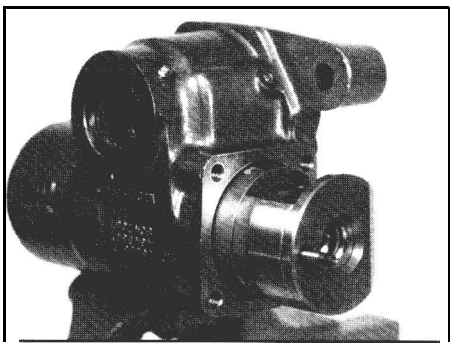

Position rack piston in housing

8 Apply clean 011 to housing cylinder bore Place the rack piston (19) in the housing piston bore with ball return guide holes up.

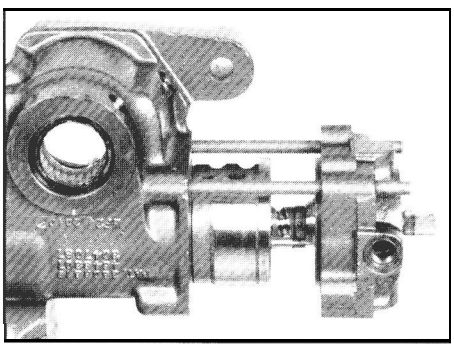

Insert worm and valve assembly into rack piston

7/16"-14 x 7¼" All Thread

9. Insert the worm screw into the rack piston close to maximum depth, without the valve housing making contact with the poppet stem. Insert two 7/16"'-I4 All threads through valve housing bolt holes and tighten into housing to support the worm screw. Line up rack piston ball guide holes with the worm ball track grooves by rotating the input shaft.

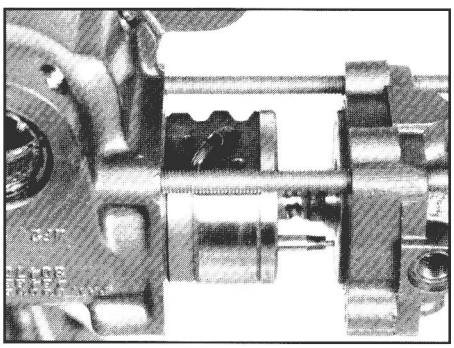

Assemble ball return guide halves

10. Compare the new guides with the guides removed from the gear, use the ones that look the same Left hand guides are copper plated, right hand guides are unplated, Assemble the new ball return guide halves (28) into the rack piston until seated, rotate the input shaft slightly if necessary.

⚠ WARNING **Do not seat guides with a hammer. Damage to guides can result in subsequent lockup or loss of steering.**

⚠ CAUTION **If a new rack piston (19) or a new input shaft, valve, worm subassembly (13 or 13A) is being assembled, the balls (27) removed from the unit must be discarded and a service ball kit utilized. The balls in a service ball kit are sized to function in the ball track guide path as altered by component replacement.**

⚠ CAUTION **When using the service ball kit, use the correct quantity of service balls: TAS40-29, TAS55-31, TAS65-32, TAS85-34.**

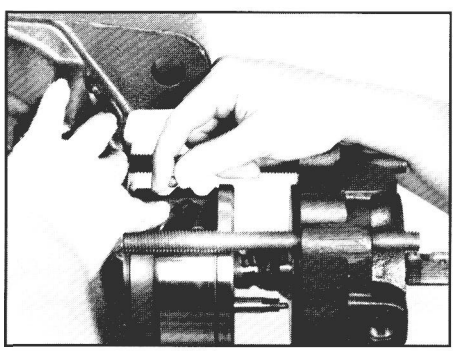

Assemble balls

11. **Hold the bail return guides (28) firmly in place during this entire procedure.** Insert as many of the steel balls as you can through the hole in the top of the ball return guides Rotate the input shaft to pull the balls down and around the ball track guide path Continue until the correct number of balls are in the ball track guide path.

⚠ WARNING **Hold down the ball return guides until cap or clip is reinstalled.**

Failure to hold the guides will result in a trapped ball or balls, which could cause a vehicle accident. If the ball guides become unseated (raise up) at any time, repeat the procedure starting at step 9.

⚠ WARNING **The correct number of balls are required for proper gear operation. Count the balls and insert each carefully as in step 11.**

	TAS40	TAS55	TAS65	TAS85
Original	29	30/31*	32	34
Service	29	31	32	34

'TAS55 gears built prior to 338-89 were equipped with 30 balls.

⚠ CAUTION **Do not allow valve housing to contact the poppet stem or move more than 2½ inches (69.1 mm) from upper end of rack piston during these procedures. This could incorrectly reset the poppet, or back out worm beyond closed ball loop, trapping balls.**

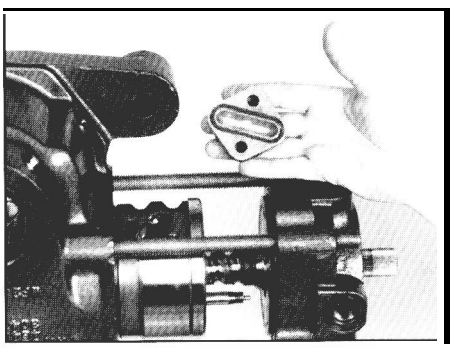

Assemble ball return guide cap, if equipped

5/32" Allen Or T-30 Torx socket
Lbf*in. Torque wrench
Grease

1 2 If your qear IS equipped with the ball return guide cap (30), grease a new ball return guide cap seal (29) and place it in the seal groove of the cap. Assemble the cap so the seal makes full contact with the rack piston surface. Install two new Allen or Torx head screws (31) and torque each screw alternately until a final torque of 18 **lbf-ft (24,5** N-m) is achieved.

OR

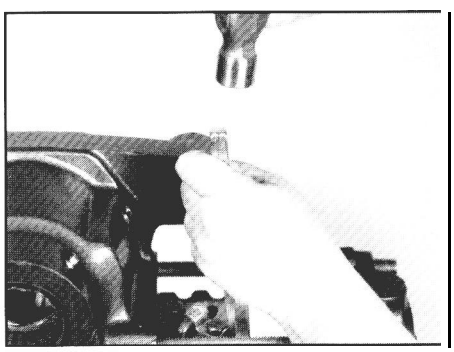

Assemble ball return guide clip, if equipped

1/2" Socket
Lbf*in. Torque wrench
Punch
Hammer

13 If your gear is equipped with a ball return guide clip (32), instead of a cap, install a new clip so both bolt hole faces are in full contact with the rack piston surface. Install the two hex head bolts (33). Torque the bolts to 18 Ibf.ft (24.5 Nom). Finish by bending the guide clip Iocking tabs up against the bolt head flats

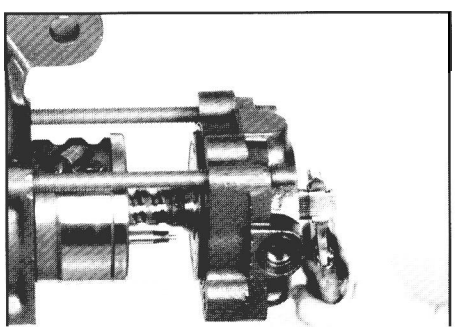

Rotate input shaft to check for proper installation of balls

14. Rotate the input shaft from one end of travel to the other without contacting the poppet stem to the valve housing, and without moving the valve housing face more than 2½" (69,1 mm) from input end (upper end) of rack piston. If you cannot rotate the input shaft, remove the balls and reassemble them.

⚠ WARNING **If you install a gear on a vehicle with the worm shaft unable to rotate, the gear will not function correctly. Steering and gear failure may result.**

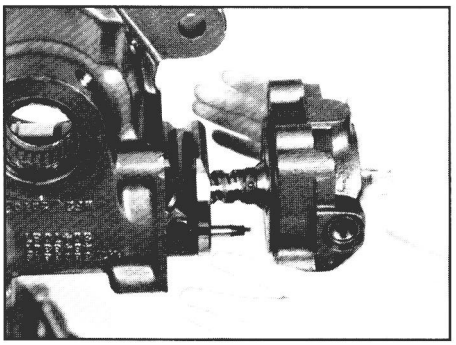

Install rack piston, worm, valve assembly

Oil

15 Apply clean oil to Teflon seal ring (20) on rack piston, Make sure there is a space of 3/8 - '/2" (10,0-13,0 mm) between valve housing (5) and poppet stem to prevent poppet contact at either end. Remove the All Threads, and push the rack piston assembly into the housing with the rack piston teeth toward the sector shaft cavity, Line up the valve housing cylinder feed hole with the gear housing feed hole. Make sure both o-rings in the valve housing remain in position.

⚠ CAUTION **Do not damage the seal ring (19) while installing the rack piston into housing. If the seal ring end of rack piston enters the housing first, the seal ring will be destroyed when the rack is removed.**

⚠ CAUTION **The poppet seat and sleeve assemblies (22) must not bottom against the internal poppet stops in the steering gear until the gear is installed on the vehicle and the poppet adjustment procedures are performed.**

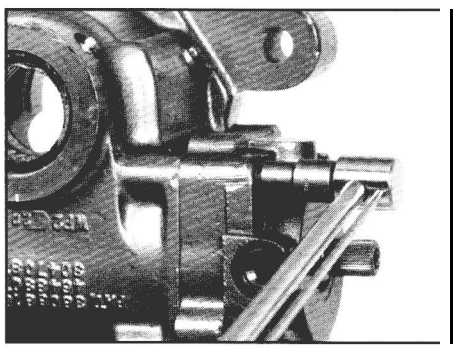

Install valve housing bolts

E-16 Torx socket (TAS40, 55, 65)
E-1 8 Torx socket (TAS85
Lbf*ft Torque wrench

16 Lubricate and Install the four valve housing bolts (1) into the housing. Torque the **TAS40, 55 and 65 bolts alternately to 80 lbfdt** (1 08.5 Nom), Torque TAS85 bolts to 118 lbf*ft (160 N-m)

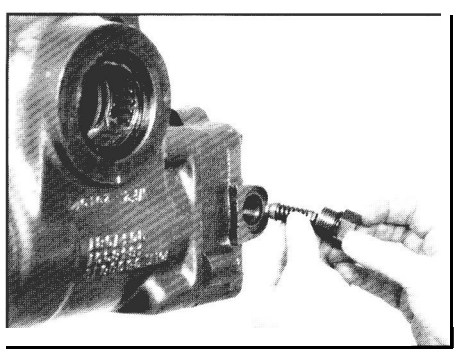

Install relief valve parts

7/8" Socket
Lbf*ft Torque wrench

17 If the gear is equipped with a relief valve, assemble a new o-ring (57) on relief valve cap (53). Assemble the small end of tapered spring onto the pin on the relief valve cartridge and insert the assembly, (large end of tapered spring end first) into the relief valve cap cavity. Turn the relief valve cap as assembled into the valve housing and torque to **30 lbfdt** (41 N-m).

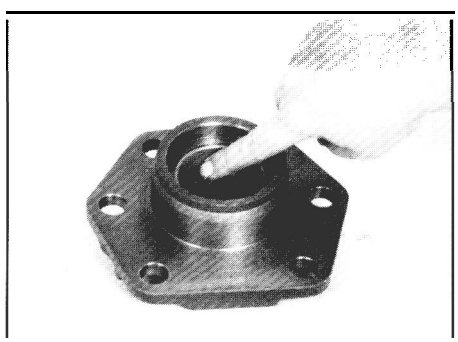

Lubricate side cover bushing/ bearing

18 **TAS40, 55,65: Lightly 011 DU bushing. Do not grease.**

TAS85 only: Apply a generous amount of Mobil Temp' 1 or 2 (do not substitute another type of grease) to the caged bearing assembly inside the side cover.

⚠ CAUTION **This bearing is sealed and will receive no lubrication from the hydraulic fluid in the gear. Failure to use the proper grease could result in premature bearing wear.**

*Trademark of Mobil Oil Corp.

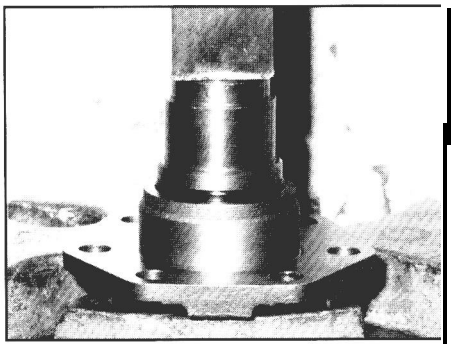

Press seal in side cover

J37705 (TAS40)
J37071 (TAS55, 65)
J38779 (TAS85)
Press

19. Grease and assemble new seal (41) onto installation tool so the side with the garter spring IS against the shoulder of the tool. Pilot the tool into the side cover (46) with a force of 100-800 lb (445-3560 N) until it IS seated against the bearing or bushing.

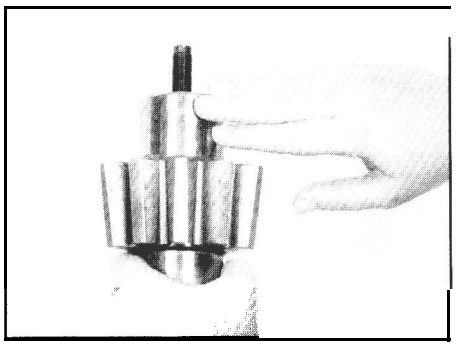

Lubricate sector shaft

20. **TAS40, 55,65:** Lightly oil short bearing area of sector shaft. **Do not grease.**

TAS85only: Apply a generous amount of Mobil Temp* 1 or 2 or equivalent to the short bearing area of the sector shaft.

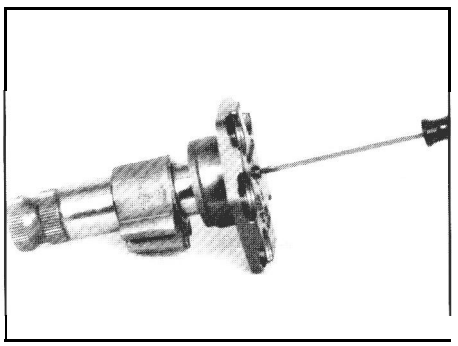

Install sector shaft into side cover

Screwdriver

21. Insert the sector shaft (42) into the side cover subassembly (46), and screw the sector shaft adjusting screw (43) counterclockwise into the side cover until the screw reaches solid height.

Rotate the adjusting screw clockwise one half turn so the side cover will rotate freely on the sector shaft.

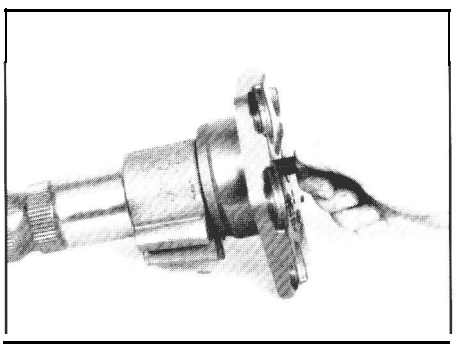

Install jam nut

22. Install the sector shaft adjusting screw jam nut (47) onto the sector shaft adjusting screw (43) a few threads. Final adjustment wiII be made later.

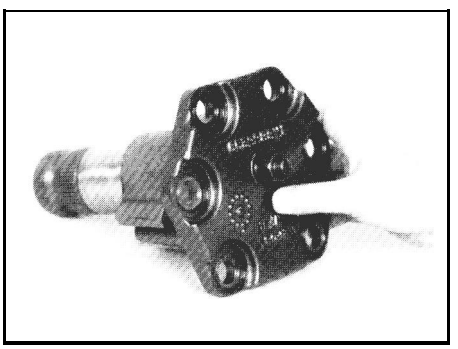

Assemble vent plug

23. Press the new vent plug (49) into the hole provided in the side cover until the plug is bottomed.

⚠ WARNING **Do not weld or otherwise plug this hole in any permanent manner. This is a safety vent which functions only if the side cover seal fails. If the seal fails and the plug cannot vent, the steering gear may lock-up or otherwise malfunction.**

*Trademark of Mobil Oil Corp.

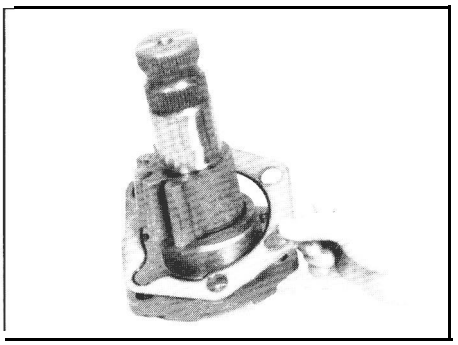

Install side cover gasket

24. Apply clean grease to the new side cover gasket (45) to hold it in place and assemble it onto the side cover (46).

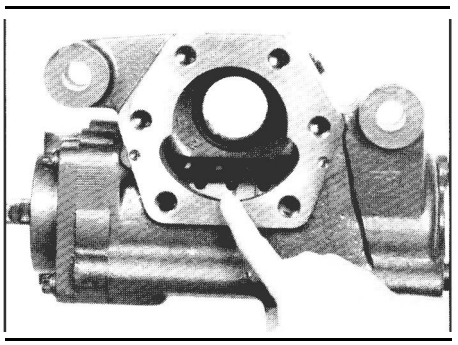

Center rack piston

25. There are four teeth on the rack piston Rotate input shaft to position the rack piston so the space between the second and third tooth IS in the center of the sector shaft opening This wiII center the rack piston for assembly of sector shaft

⚠ WARNING **If the rack piston is not centered when sector shaft is installed, gear travel will be severely limited in one direction. This could result in an accident.**

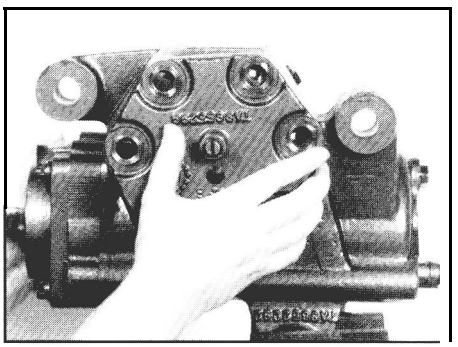

Install sector shaft and side cover into housing

Masking tape

26. Clean off any old tape on the serrations. Reapply one layer of masking tape. Install the sector shaft assembly into the housing. The center tooth of the sector shaft must engage the center space (between the second and third tooth) of the rack piston, with side cover gasket in place

⚠ CAUTION **If the serrations are not properly taped, they will damage the output seal (38) in housing, causing the seal to leak.**

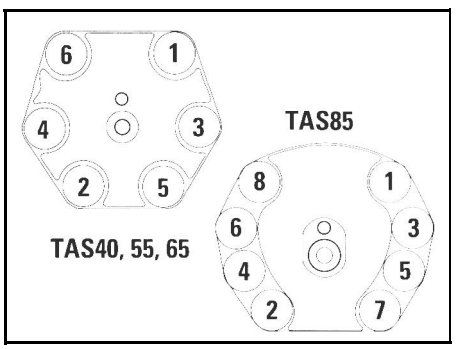

Install side cover bolts

13/16" Socket (TAS40)
15/16" Socket (TAS55, 65, 85)
Lbf*ft Torque wrench

27. Install the special side cover bolts (48) into the side cover and torque them in the sequence shown If bolts must be replaced, use bolts of the same design, type and length as those you removed. Do not use a substitute.

Lubricate side cover bolts and torque TAS40 bolts to 118 Ibf*ft (160 N-m), TAS55, 65 and 85 bolts to 170 Ibf*ft (230 N*m),

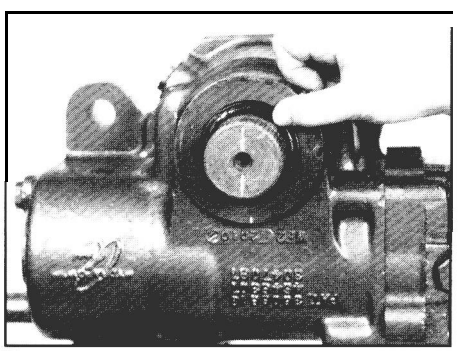

Assemble trunnion dirt seal

Mobil Temp* 1 or 2 or equivalent

28 Remove tape from sector shaft and pack the end of housing trunnion area at the sector shaft with clean, high temperature industrial grease, Mobil Temp* 1 or 2 or equivalent. Apply more of the grease to inside of the new trunnion dirt seal (39) and assemble it over the sector shaft and into the trunnion bore.

*Trademark of Mobil 011 Corp.

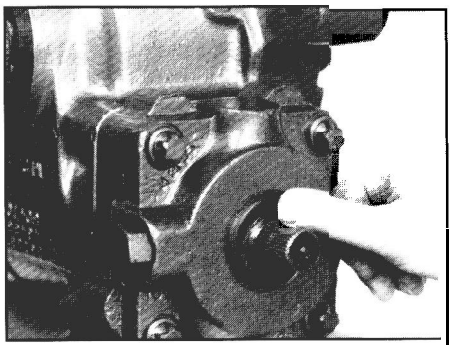

Install dirt& water seal

~

29. Pack the end of the valve housing bore around the input shaft with clean, high temperature industrial grease, Mobil Temp* 1 or 2 or equivalent. Apply more of the grease to the inside of a new dirt and water seal (2) and install it over the input shaft and seat it in the groove behind the serrations and against the valve housing.

Proceed to Final Adjustments on page 52.

*Trademark of Mobil Oil Corp.

Poppet Component Replacement

Tools Required

2 lb Sledge
Lbf=ft Torque wrench
J36452-A
Press
3/8x6“ drill rod
Ratchet
Soft-jawed vise

Materials Required

Locquic “T primer
Loctite RC680

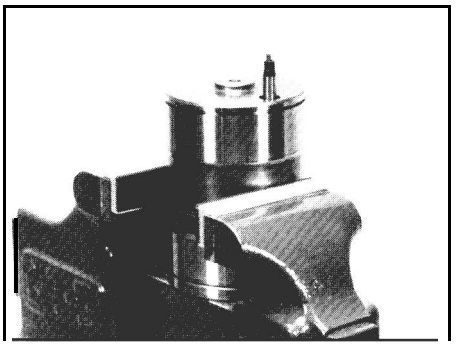

Place rack piston in vise

Soft-jawed vise

1 If the poppet assemblies are to be removed for replacement, place rack piston in a soft-jawed vise.

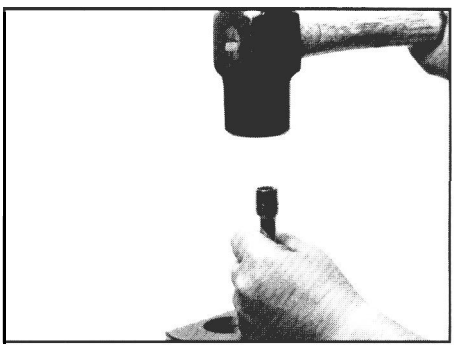

Loosen poppet adjuster seat

J36452-A
2 Lb Sledge

2 Slide special tool #J36452-A over the seat of poppet adjuster seat and sleeve assembly (22) and engage tool in the slots in the threaded sleeve, Hit the end of the tool firmly four or five times with a 2 lb sledge hammer to loosen Loctite,

⚠ CAUTION **Poppet adjuster seat and sleeve assemblies (22) are retained by Loctite applied to the threads which makes the assemblies difficult to remove.**

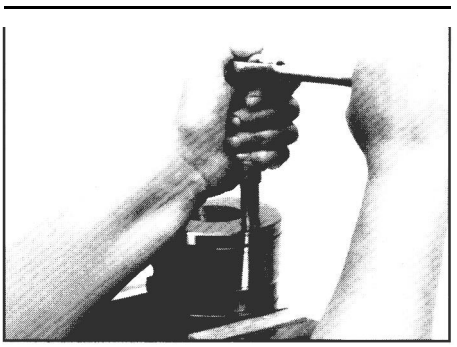

Remove poppet adjuster seat

J36452-A

3 With a ratchet applied to the tool, turn one adjuster seat and sleeve assembly out of the rack piston. If the ratchet does not turn easily, strike the adjuster removal tool again with a hammer. If the engaging tangs won’t stay in place while torquing, it might be necessary to hold in place with an arbor press while applying loosening torque. Discard poppet seat and sleeve assembly.

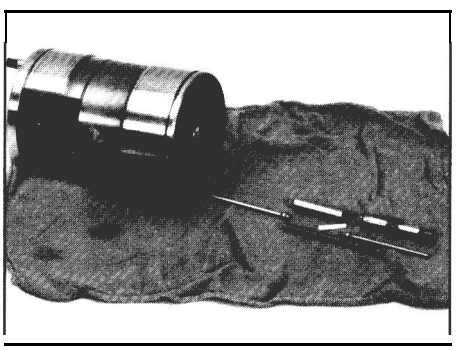

Remove poppet components

4 Remove the two poppets (23), spring (24), spacer rod (25), and push tube (26)

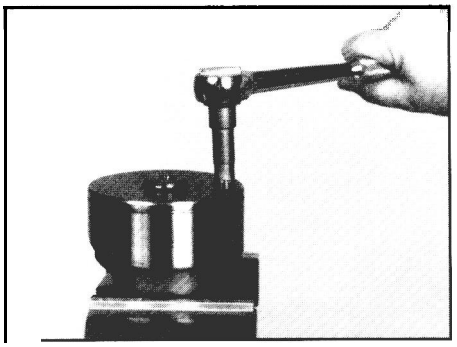

Remove other seat & sleeve if necessary

5 Remove and discard remaining poppet seat and sleeve assembly only if required

NOTE It is possible to reset one poppet adjuster seat and sleeve assembly for automatic poppet adjustment while it is in the rack piston if one adjuster seat and sleeve assembly and the poppets, spring, spacer rod and push tube are removed.

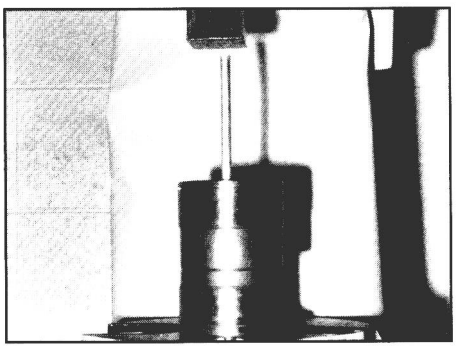

Reset remaining poppet seat and sleeve assembly

Press
3/8" X 6" Drill rod

6, If one poppet seat and sleeve assy. (22) was left in rack piston, it can be reset for automatic poppet adjustment by inserting a 3/8"9.52 mm) diameter X 6“ (1 52,4 mm) drill rod down through the poppet seat hole at the opposite end of the rack piston and against the adjuster seat to press the seat in until it bottoms against the adjuster sleeve.

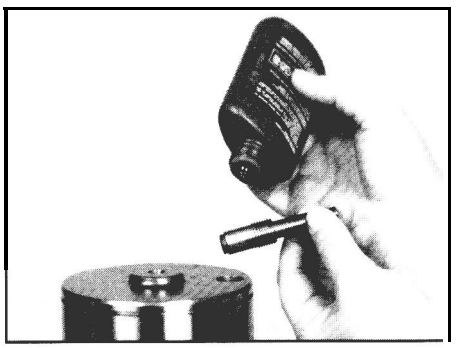

Apply Locquic “T’ primer and Loctite RC680

Locquic“T” primer
Loctite RC680

7, Carefully apply Locquic “T’ primer to the threads in poppet holes, and threads on the new seat and sleeve assembles (22). Allow to dry for ten minutes; then carefully apply Loctite RC680 to same threads.

⚠ CAUTION **Do not allow Loctite or Locquic to get on the adjuster seat component of the adjuster seat and sleeve assembly. The poppets will not function properly.**

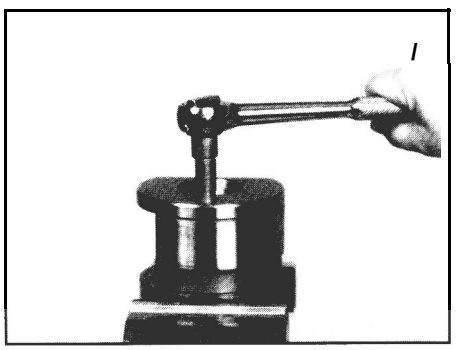

Install one poppet seat and sleeve assembly

Soft-jawed vise

8

⚠ WARNING Wear eye protection while assembling poppets, as spring loaded poppets could eject and cause eye injury.

Place rack piston (19) in a soft-jawed vise and turn one new poppet adjuster seat and sleeve assembly (22), (slotted end out) into the poppet hole in one end of rack piston.

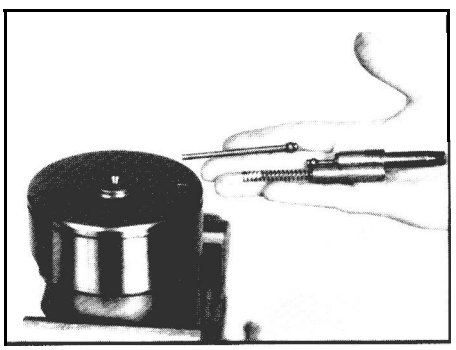

Install remaining poppet components

J36452-A
Lbf•ft Torque wrench

9. From the other end of the poppet hole in the rack piston, install: one poppet (23), poppet spring (24), nylon spacer rod (25), push tube (26), other poppet (23), and the other new poppet adjuster seat and sleeve assembly (22).

Torque both poppet seat and sleeve assemblies to 18 **lbf.ft (25** N*m).

Return to step 27, page 29.

Valve Housing/Worm Screw Disassembly

Tools Required		Materials Required
Hammer	Lbf*in. Torque wrench	Small probe or pick
Lbf*ft Torque wrench	J37464	Sockets
Punch, center	J37070	12-point sockets
Punch, roll pin	J37073	
	Screwdriver	

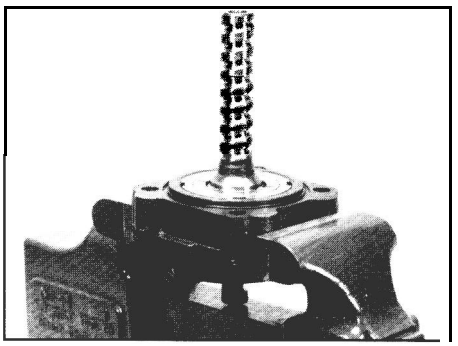

Place valve housing and valve assembly in vise

1. With worm vertical, place the valve housing, input shaft, valve/worm assembly in a vise.

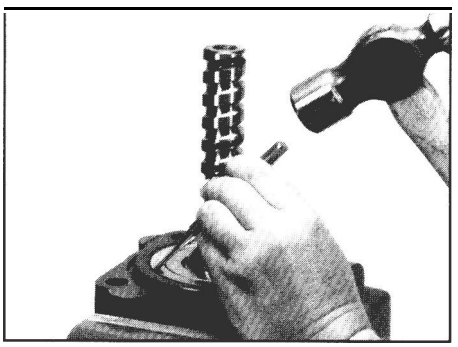

Unstake adjuster locknut

2. Unstake the valve housing (5) where it was upset into the adjuster locknut (1 8) slot, Also unstake adjuster nut from adjuster (1 7).

Roll pin punch
Hammer

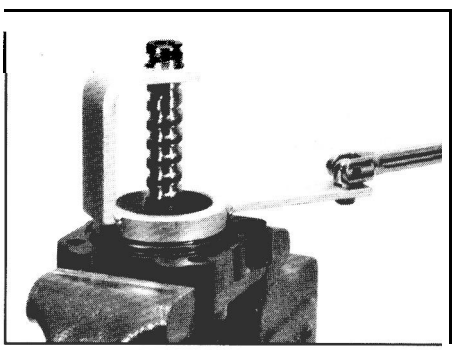

Remove bearing adjuster locknut

3. Turn bearing adjuster locknut (18) out of the valve housing

J 3 7 4 6 4

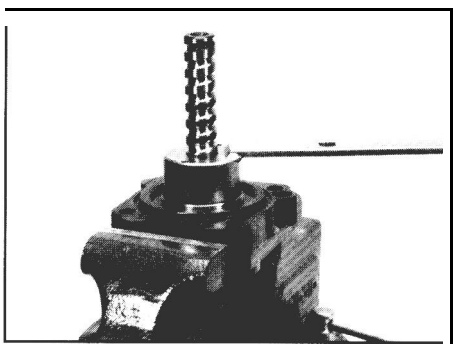

Remove bearing adjuster

4. Turn bearing adjuster 17) out of the valve housing,

J37070

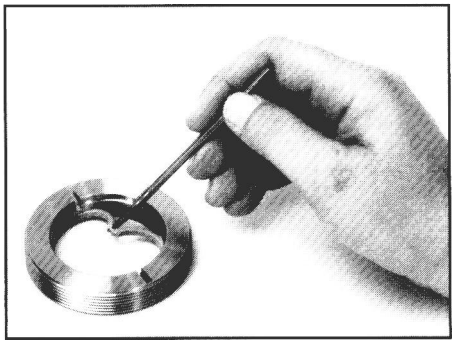

Remove seal ring and o-ring

Small probe or pick

5. Remove and discard seal ring (8) and o-ring **(9)** from bearing adjuster.

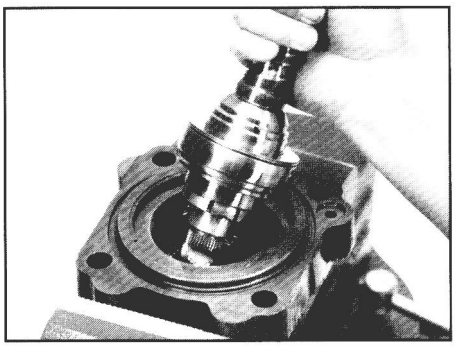

Remove input shaft

6. Remove the input shaft, valve/worm assembly (13 or 13A) from the valve housing

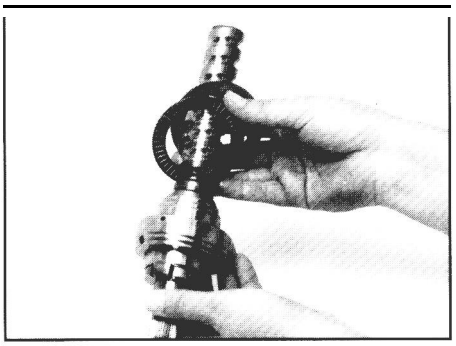

Remove thin washer and bearing

7 Remove thin thrust washer (16) and thrust bearing (15) from input shaft.

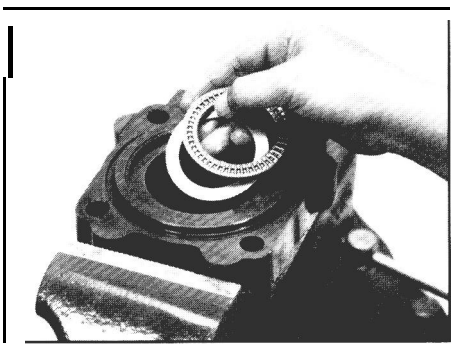

Remove thick washer and bearing

8. Remove thick thrust washer (12) and thrust bearing (15) from valve housing.

⚠ CAUTION **Input shaft, valve worm assembly must not be disassembled further. The components were a select fit at assembly and are available only as part of this subassembly. If disassembled further, the subassembly must be replaced.**

OR

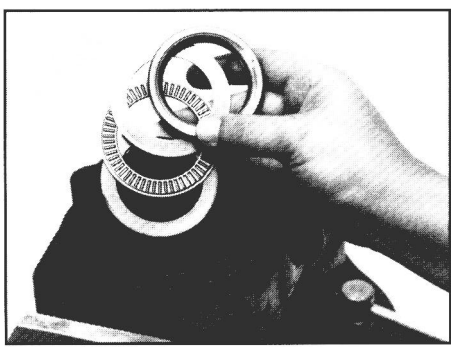

Remove bearing components

8 A For alternate construction TAS65 gears, remove spacer sleeve (14), thin washer (16), thrust bearing (15) and thick washer (12).

⚠ WARNING **If the TAS65 gear has a ball bearing and ball race in the valve housing, remove them and call TRW for disposition. Do not rebuild the gear.**

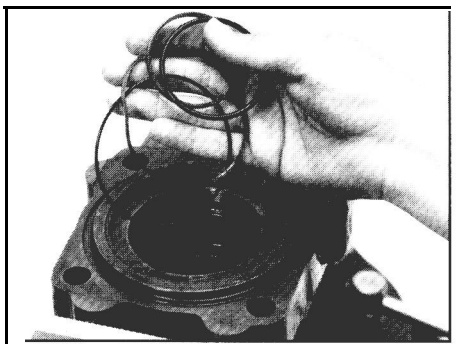

Remove seal rings and o-rings

Small probe or pick

9. Remove and discard seal rings (10) and (8) and o-rings (1 1) and (9) from valve housing (5).

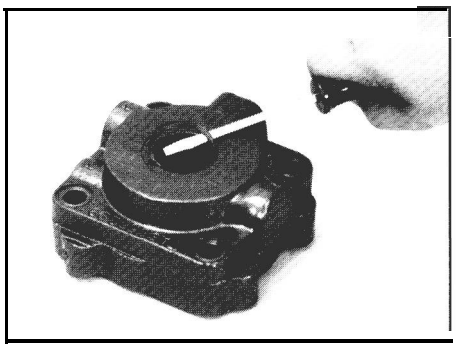

Remove retaining ring

Screwdriver

10, Turn over valve housing and remove retaining ring (3)

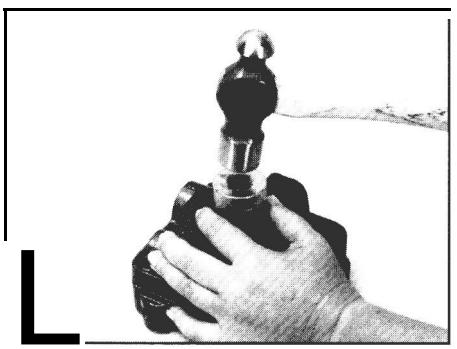

Remove seal

1⅛" Socket Hammer

11. **⚠ CAUTION** **Exercise special care when removing seal (4) to prevent damaging the valve housing seal bore.**

Tap input shaft seal (4) out of valve housing, Discard seal.

NOTE The valve housing also utilizes a ball plug for manufacturing purposes that must not be removed,

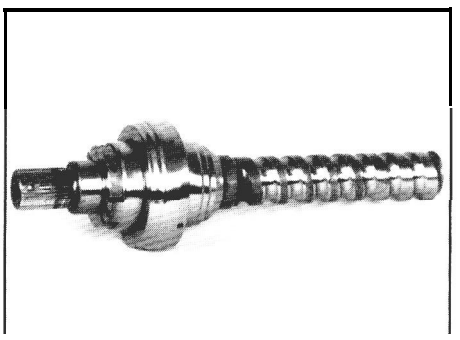

Inspect input shaft, valve worm assembly sealing areas

12 Inspect the sealing areas of input shaft and valve (13 or 13A) for nicks and run your fingernail edge across the sealing surfaces to detect steps. Inspect for discoloration from excess heat. Inspect input shaft ball-track grooves for brinelling or spalling, If any of these conditions exist, you must replace the input shaft, valve/worm assembly, valve housing and balls. Also replace rack piston if brinellingor spalling is found

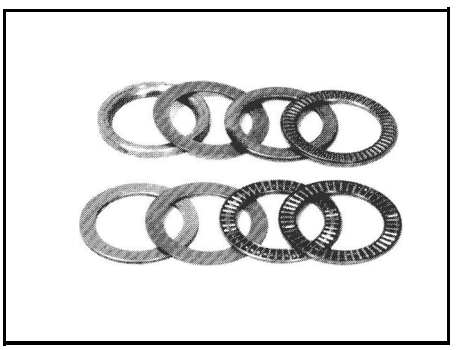

Inspect thrust washers and bearings

13.Inspect the thrust bearing (15) rollers for any deterioration. Inspect thrust washers (12 & 16) for brinelling, spalling, or cracks. Replace any part with these conditions.

Alternate Construction TAS65: If spacer sleeve (14) is damaged, **replace the input shaft/valve/worm subassembly** and use thick washer and roller bearing only during reassembly.

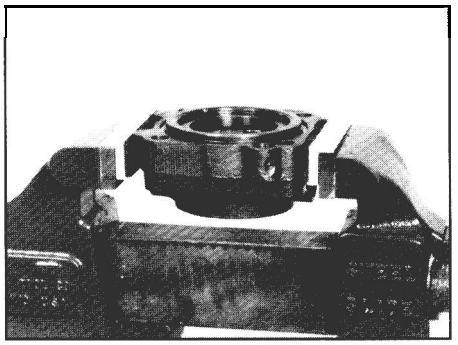

Place valve housing in vise

14. Place valve housing (5) firmly in a vise so the input shaft, valve/worm assembly (13 or 13A) can be assembled vertically with the worm end up

⚠ CAUTION **Do not clamp against threaded port hole or relief valve hole sealing faces when placing valve housing in vise.**

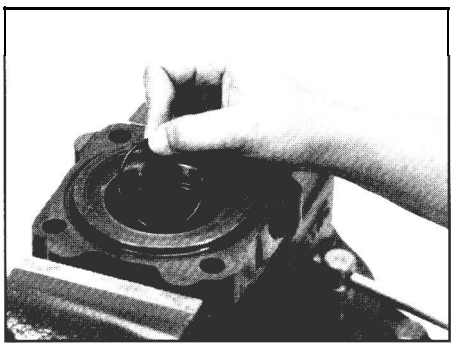

Assemble o-ring

15. Oil and assemble a new o-ring (9) into its counterbore in valve housing

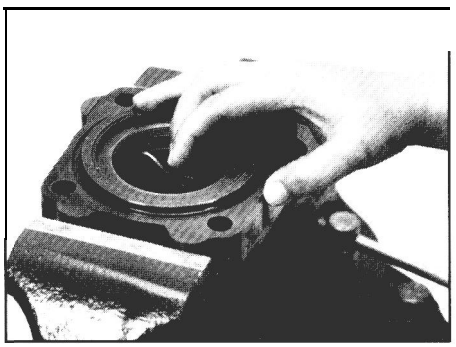

Assemble other o-ring and seal ring

16. Lightly oil and assemble new o-ring (1 1) and new seal ring (10) into the large diameter seal ring groove in valve housing, bending and working them in and smoothing them out as necessary.

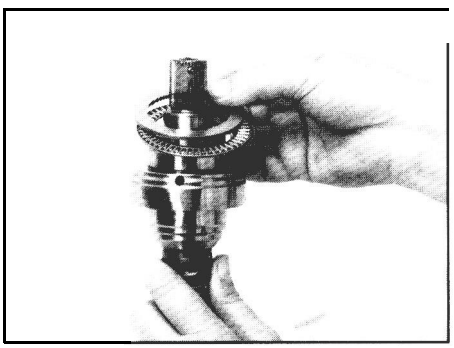

Install roller thrust bearing and washer

17 Install roller thrust bearing (15) and then the thick washer (12) (square side out) onto input shaft end of input shaft, valve, worm subassembly, seating them against the input shaft thrust face.

O R

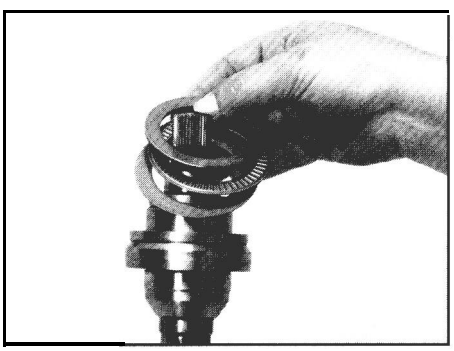

Install bearing components

17A. Alternate construction TAS65: Assemble spacer sleeve (14) onto input shaft with radiused side toward valve Make sure sleeve IS square. Assemble thin washer (16), thrust bearing (15) and thick washer (12) onto input shaft behind spacer sleeve.

⚠ CAUTION **If you are replacing the input shaft/ valve/worm assembly, discard spacer sleeve and thin washer.**

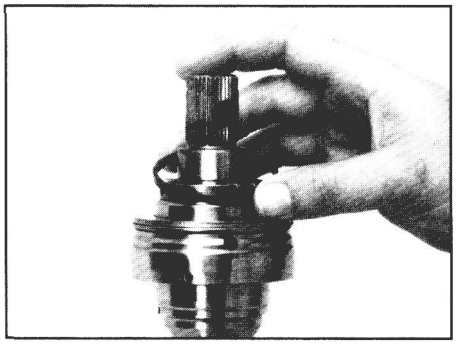

Install seal ring

18 Lightly 011 and assemble new seal ring (8) onto input shaft and against the thick thrust washer (12) to hold the bearing components in place.

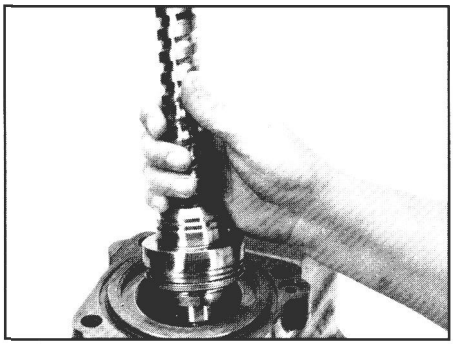

Assemble input shaft, valve worm & bearing assembly

19 Dip the input end of the input shaft, valve, worm assembly (13 or 13A) into oil up to the worm lead. Assemble the input shaft end of the assembly into the valve housing (5) until it is firmly seated.

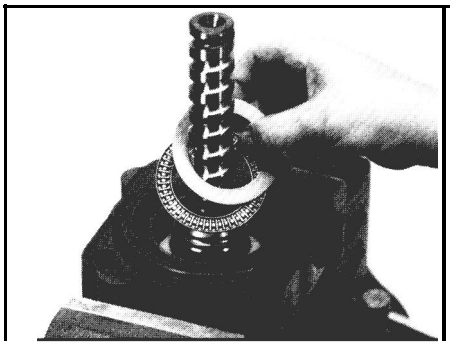

Assemble bearing and thrust washer

20 Apply oil and assemble the other thrust bearing (15) then the thin thrust washer (16) over the ball groove end of worm, and seat them against the shoulder of input shaft, valve, worm assembly,

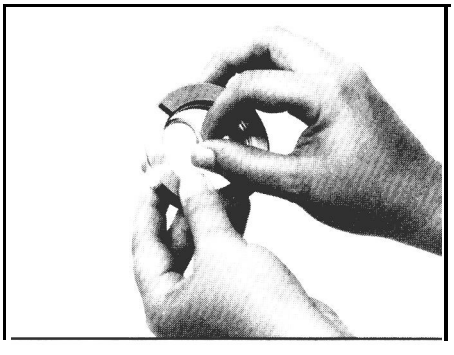

Assemble seals in bearing adjuster

21 Lightly 011 a new o-ring (9) and assemble into the seal groove in bearing adjuster (17), 011 and work a new seal ring (8) into the same groove and smooth it out.

NOTE	Be sure the valve housing, adjuster locknut and bearing adjuster threads are clean and free of any staking burrs that would impede the locknut from turning freely on adjuster or the adjuster turning freely in valve housing.

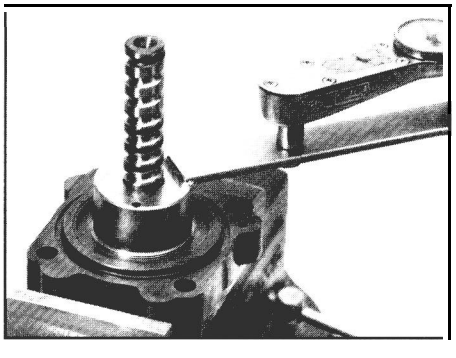

Assemble bearing adjuster

J37070
Lbf*ft Torque wrench

22 Lightly 011 and assemble bearing adjuster (17) over worm and Into valve housing. Torque adjuster to **13 lbf*ft** (18N*m) Indicated torque using a torque wrench inserted in adjuster tool #J37070. This wiII seat the components. Back off adjuster ¼ to ½ of a turn.

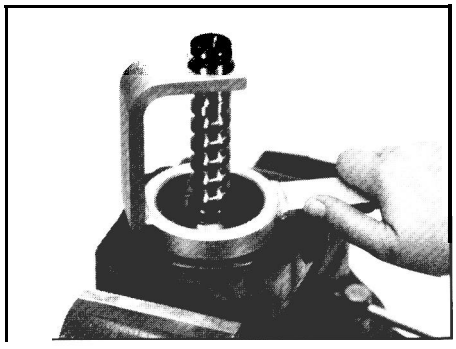

Assemble new locknut

J37464

23, Lightly oil and assemble new locknut (18) onto bearing adjuster (17) with radius (slightly rounded) side down. Tighten slightly to keep the bearing adjuster in place.

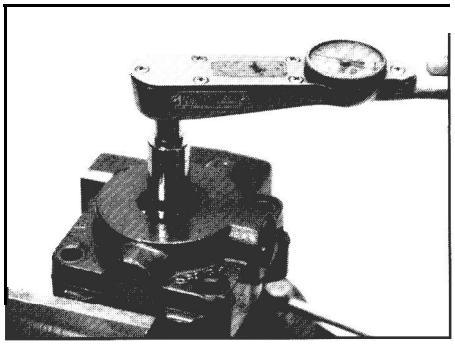

Adjust to required input torque

¾ or I l/16" 1 2-point socket
Lbf*in. Torque wrench

24. Reverse assembly in vise so the worm end is down. With an inch pound torque wrench on the input shaft, note torque required to rotate the input shaft 360° in each directlon. Tighten the bearing adjuster to Increase the maximum torque at the input shaft 5-10 Ibf*in. (.5-1 0 N*m) over that which was previously noted.

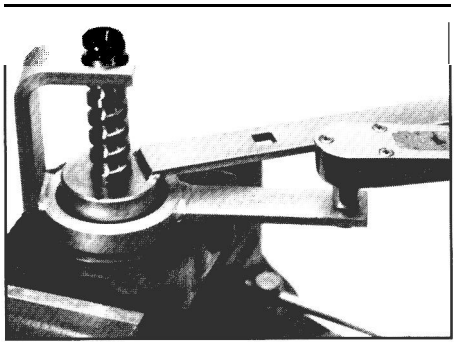

Torque locknut

J37070
J37464
Lbf*ft Torque wrench

25. Again reverse the assembly in vise. Torque locknut while holding bearing adjuster in position established in step 24 with appropriate adjuster tool. When using a torque wrench in locknut tool J37464, the torque wrench reading should be **112 lbf.ft** (152 N*m).

NOTE The bearing adjuster, locknut and valve housing flange should be flush. If not, the seal ring (8) or o-ring (9) may be out of position; which will result in axial lash.

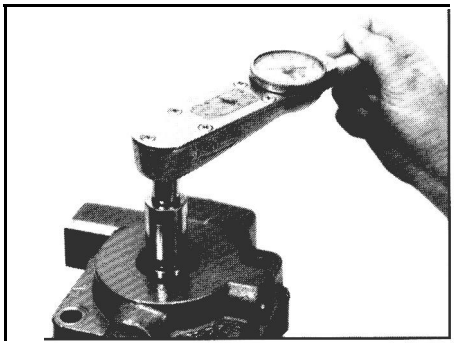

Check input shaft torque

26. Recheck input shaft torque. It should match torque measured in step 24. Repeat steps 24 and 25 if necessary.

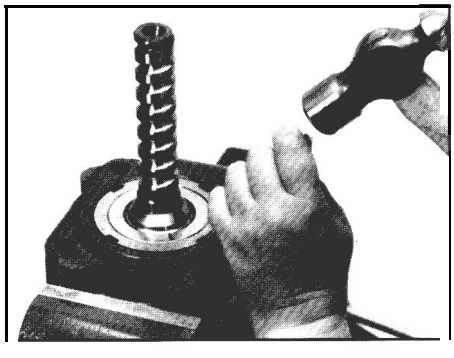

Stake valve housing and locknut

Center punch
Hammer
13/16" Socket
Lbf*in. Torque wrench

27, Stake valve housing into the clockwise most corner of two opposing slots in locknut (1 8). Stake the locknut into the adjuster (17) in two places (1 80° apart) at threaded area. Choose areas that have not been previously staked.

After staking, torque required to rotate input shaft must be between **5-10 lbf*in.** (.5-1.0 N*m) greater than the torque noted in step 24. Torque value must **not exceed 22 lbf*in.** (2.5 N*m). Unstake and readjust if necessary

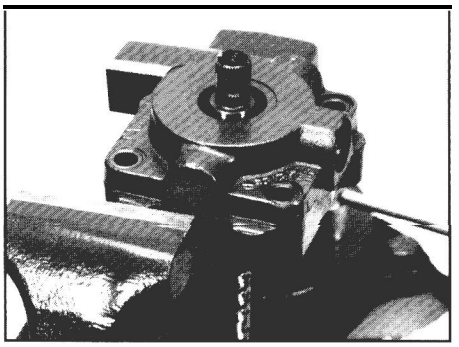

Reposition subassembly in vise

28 Reposition worm screw/valve housing subassembly in soft-jawed vise, clamping tightly against valve housing, so the worm screw is pointing down,

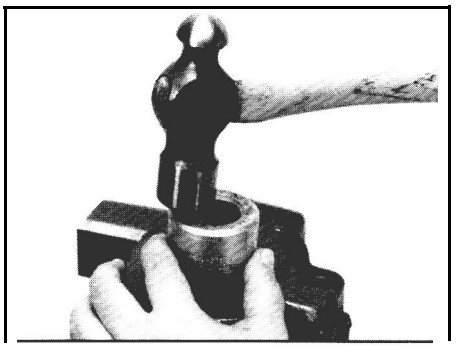

Install input shaft seal

J37073
Hammer

29 Apply clean grease to the outside and inside diameters (fill cavity between the lips) of the new input shaft seal (4) and assemble it, garter spring side first over the input shaft. Align seal in the valve housing seal bore.

Assemble seal installer tool #J37073, small diameter end first, over the input shaft and against the seal. Tap the seal installer tool until the tool shoulder is squarely against the valve housing. This will correctly position the seal in the housing bore just beyond the retaining ring groove.

Remove any seal material that may have sheared off and is in seal bore and retaining ring groove.

⚠ CAUTION **The input shaft seal must be square in the seal bore and installed to the correct depth.**

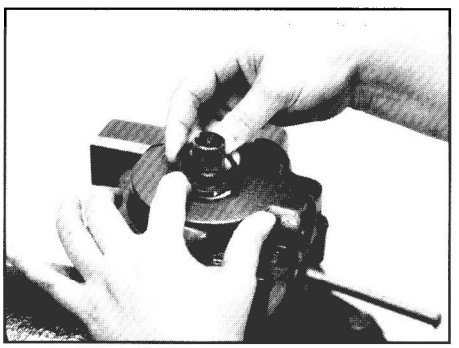

Insert retaining ring

30 Insert new retaining ring (3) into its groove in valve housing,

Return to step 28, page 30.

Roller Bearing or Retaining Ring Replacement

Tools Required	Materials Required
Press J37071 (TAS55, 65) J37705 (TAS40) J38779 (TAS85) Screwdriver	Grease

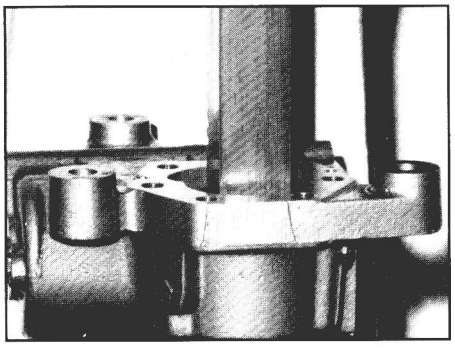

Remove roller bearing if required

J37705 (TAS40)
J37071 (TAS55, 65)
J38779 (TAS85)
Press

1. If roller bearing (37) in housing needs to be replaced, place the bearing removal end of the bearing and seal tool against the side cover end of the bearing and press it out of trunnion end of the bearing bore. Discard bearing.

⚠ CAUTION **The bearing must be pressed out from the side cover side to protect the seal counterbore. Be sure to use a bearing removal tool that will clear the retaining ring.**

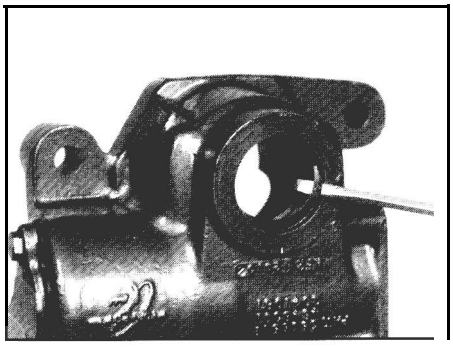

Remove retaining ring

Screwdriver

2. If the retaining ring (36) that is still in the housing bearing bore needs to be replaced, remove it through the trunnion end of the bearing bore to protect the pressure seal bore area from being damaged.

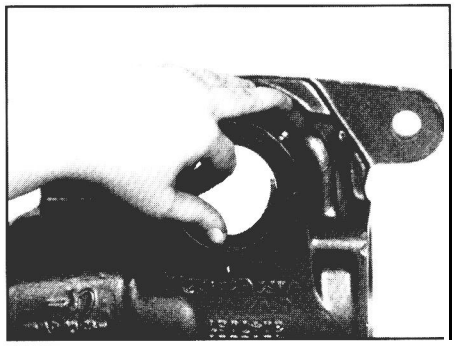

Install retaining ring

Grease

3. Insert retaining ring (36), if it was removed, into the housing bore from the trunnion end (to protect sealing area). Make sure it is seated in the retaining ring groove closest to side cover end of the bearing bore. Lubricate the bearing bore.

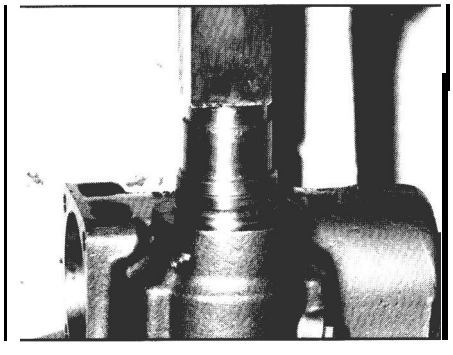

Press in housing oiler bearing

J37705 (TAS40)
J37071 (TAS55, 65)
J38779 (TAS85)
Press

4. Press the roller bearing (37) into the housing from the trunnion end of bearing bore until it is seated against the retaining ring. Be sure the housing is square with the press base and the bearing is not cocked

⚠ CAUTION **Use the bearing <u>installation end</u> of the tool. If the bearing <u>removal end</u> of the bearing & seal tool is used to press in bearing, the cage on the new bearing may be damaged.**

Return to step 32, page 30.

Replace Housing Ports, Plugs, Screws, Fittings

Tools Required	Materials Required
Allen wrench Torx sockets Sockets Lbf*in. Torque wrench Lbf”ft Torque wrench	

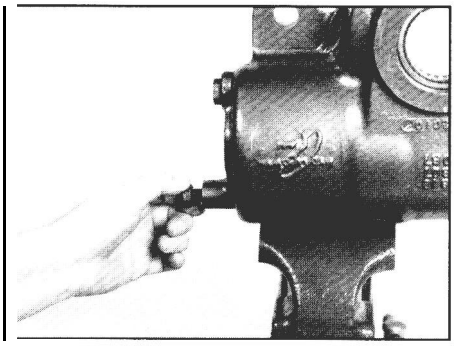

Replace poppet fixed stop screw

5/8” Socket or
E-14 Torx socket
Ibf*ft Torque wrench

1. If damaged, remove and replace the poppet fixed stop screw (52 or 52A) and washer (53) if equipped, Replace with poppet fixed stop screw (52A), discard the washer, Torque to **48 lbf•ft (65** Nom),

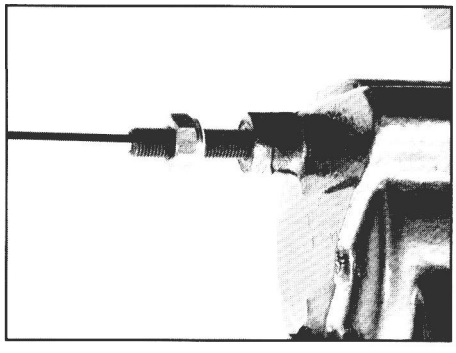

Replace poppet adjusting screw

7⁄32" Allen wrench
¾" or ⅝" closed-end wrench
Lbf•ft Torque wrench

2. If damaged, remove poppet adjusting screw (59) and sealing nut (60) without allowing the nut to change its position on the screw.

   Assemble the new nut onto the new adjusting screw, matching its position to the nut and screw removed. Torque sealing nut to **35 lbf•ft** (47 N-m),

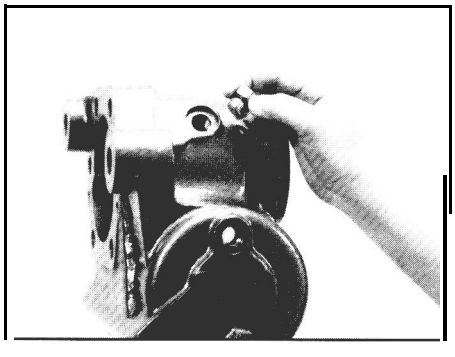

Replace automatic bleed screw, and aux, port plugs

E-1 4 Torx socket
Lbf=ft Torque wrench

3. If damaged, remove and replace automatic bleed plug (51). Torque to **48 lbf•ft (65** Nom),

   If damaged, remove and replace permanent auxilliary port plugs (54) and o-rings (55). Assemble new o-rings (55) on port plugs and torque to their respectwe ports In the housing or valve housing to **30 lbf•ft** (41 N-m)

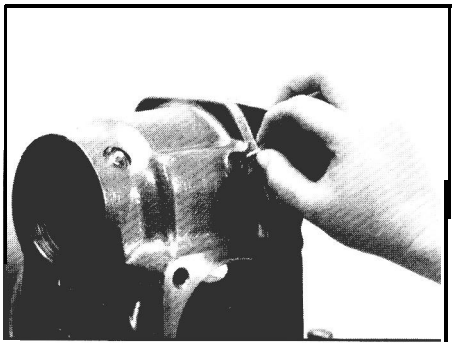

Replace manual bleed screw

5/16” Hex socket
Lbf”ln. Torque wrench

4. If damaged, remove and replace manual bleed screw (50). Torque to 30 **lbf•in.** (3,4 N•m).

Return to inspection section, page 31.

Final Adjustments

Tools Required		Materials Required
Box-end wrench Lbf•ft Torque wrench Lbf•in. Torque wrench	Screwdriver Sockets	

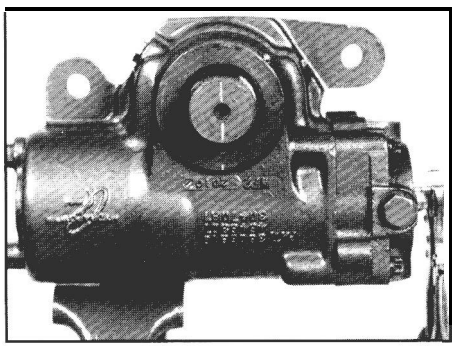

Center steering gear

3/4" and 11/16" Socket or box end wrench

1. To center the steering gear, rotate input shaft, valve worm assembly (13 or 13A) until the timing mark on the end of the sector shaft (42) is in line with the timing mark on the end of housing trunnion.

⚠ CAUTION **Do not rotate the input shaft more than 1.5 revolutions from center position until the steering gear is installed, during poppet setting procedure. Doing so could make the automatic poppets inoperative, which would require disassembly of steering gear to reposition poppet seat and sleeve assemblies.**

NOTE Initial poppet contact will occur at less than one input shaft rotation in one direction from steering gear center position, if new or reset poppet adjuster seat and sleeve assembles are assembled in the unit

NOTE Worm preload adjustment was set when input shaft, valve and worm were assembled into valve housing.

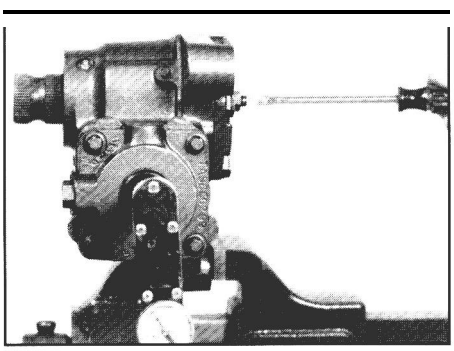

Tighten adjusting screw

Lbf•in. Torque wrench
Screwdriver
11/16" or 3/4" Socket

2 With adjusting screw jam nut (47) loose, turn sector shaft adjusting screw (43) clockwise to provide 45-50 Ibf•in. (5-5.5 N•m) of torque required to rotate the input shaft, valve/worm assembly (13 or 13A) through one half turn (1 80°) each side of center.

NOTE This procedure will properly mesh and seat the rack piston and sector shaft teeth for final adjustments.

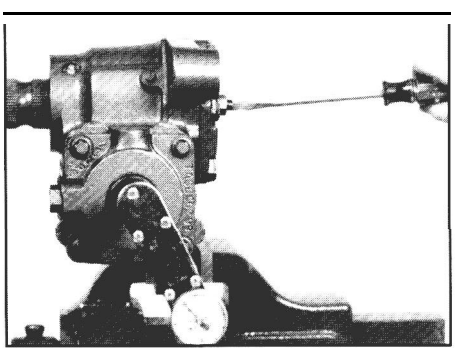

Loosen adjusting screw and note torque

Lbf•in. Torque wrench
Screwdriver
11/16" Socket

3, Turn sector shaft adjusting screw (43) counterclockwise one half turn and note maximum torque required to rotate the input shaft, valve/worm assembly through one half turn (1 80°) each side of center.

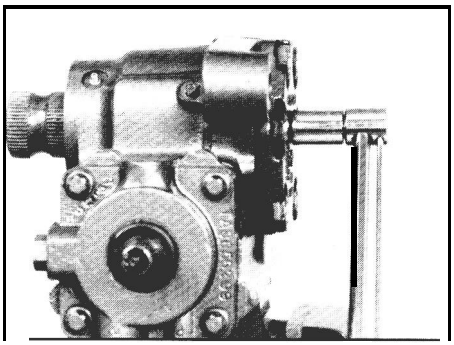

Adjust adjusting screw

¾" Socket
11/16" Socket
Lb•ft Torque wrench
Lbf•in, Torque wrench

4. Adjust sector shaft adjusting screw (43) clockwise to increase maximum torque noted in step 3 by 7 Ibf.in. (.8 Nom). Tighten jam nut (47) firmly against side cover while holding the adjusting screw in position. Final torque jam nut to 43 Ibf-•ft (58 N•m) and check input shaft, valve/worm assembly torque again. Readjust if input shaft torque exceeds 40 Ibf•ln (4.5 Nom).

Section 5 Reinstallation

Reinstallation 55

Poppet Resetting 55

Maintenance Tips 56

Glossary 57

Reinstallation

- Verify that axle stops are set to manufacturer's wheelcut or clearance specifications.
- Bolt gear to frame, torque to vehicle manufacturer's recommendation.
- Connect return line to reservoir in TAS return port.
- Connect hydraulic line from pump to pressure port in TAS unit.
- Connect steering column to input shaft, torque pinch bolt to vehicle manufacturer's recommendation.
- Install pitman arm on output shaft, with timing marks aligned. Torque bolt to vehicle manufacturer's recommendation,
- Connect drag link to pitman arm.

Poppet Resetting

IF Poppets remain unchanged from when gear was removed from vehicle, and gear is being installed on the same vehicle with no change in axle stops or linkage.	After installation, check to make sure poppets relieve in both turns just before axle stop contact is made. If not, use resetting procedure on page 20,
IF Poppets were replaced with new components or reset during gear disassembly, and are ready for automatic positioning.	Use poppet setting procedure on page 11,
IF Poppets may have been moved during disassembly or reassembly procedures, or gear is being installed on a different vehicle.	Use poppet resetting procedure on page 20

Maintenance Tips

Never high-pressure wash or steam clean a power steering gear while on or off the vehicle. Doing so could force contaminants inside the gear and cause it to malfunction.

Make sure vehicle wheel cut or clearances meet manufacturer's specifications, and make sure pitman arm timlng marks are aligned properly to prevent internal bottoming of the steering gear.

Regularly check the fluid and the fluid level in the power steering reservoir.

Keep tires inflated to correct pressure

Never use a torch to remove pitman arm.

Investigate and immediately **correct the cause of any play, rattle, or shimmy** in any part of the steering system.

Make sure the steering column is aligned properly.

Encourage drivers to report any malfunctions or accidents that could have damaged steering components

Do not attempt to weld any broken steering component. Replace the component with original equipment only,

Do not cold straighten, hot straighten, or bend any steering system component.

Always **clean off around the reservoir filler cap** before you remove it. Prevent dirt or other foreign matter from entering the hydraulic system.

Investigate and correct any external leaks, no matter how **minor**

Replace reservoir filters according to requirements.

If you feel the vehicle is developing excessively **high hydraulic fluid temperatures,** consult with your vehicle **manufacturer for recommendations.**

Maintain grease pack behind the output shaft dirt and water seal as a general maintenance procedure at least twice a year, in the Spring and Fall. Grease fittlng is provided in housing trunnion, Use only NLGI grade 2 or 3 multipurpose chassis lube, and use only a hand operated grease gun on fitting. Add grease until it begins to extrude past the sector shaft dirt and water seal

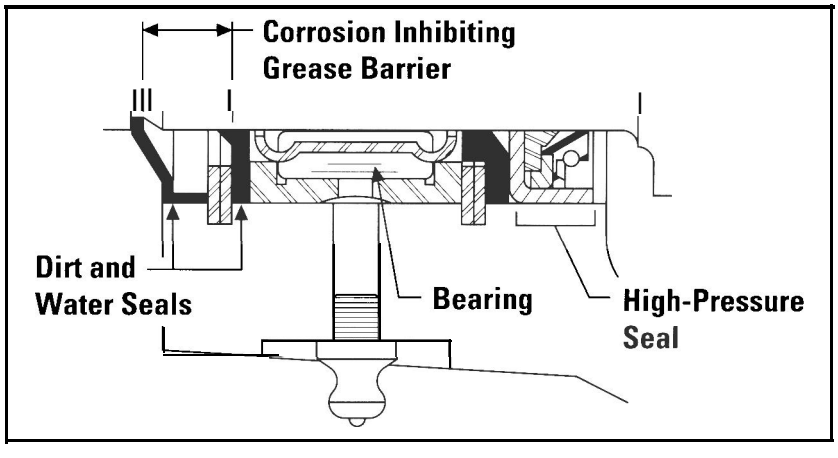

Glossary

Aerated Fluid
Fluid with air bubbles

Automatic Bleed Systems
Gears are mounted in such a way that trapped air can be forced out of the system "automatically" without loosening bleed screw. Follow procedure on page 13.

Axial
In-out movement along an axis (imaginary straight line on which an object moves)

Brinelling
Dents

Date Code
Date the steering gear was built (Julian date)

Discoloration
Change in color

External Leakage
Fluid Leaking out of the system or steering gear

Full Turn
Hub contacts axle stop

Integral Power Steering
Steering gear has manual steering mechanism, hydraulic control valve, and hydraulic power cylinder all within gear housing

Impact
The application of torques and forces to steering gear components during accidents or other similar events which exceed the hydraulic capacity of the steering gear

Internal Leakage
Fluid leaking Inside the gear

Lash
Free play

Manual Bleed Systems
Gears are mounted in such a way that an air pocket could form in one end of the steering gear. The bleed screw IS positioned so trapped air can be forced out when loosened. Follow procedure on page 13.

OSHA
Occupational Safety and Health Administration

Poppets
Unloading valves, reduce pressure in full turns.

Relief Valve
Limits maximum supply pressure

Return Line
Line that connects steering gear to reservoir to recirculate hydraulic fluid

Rotary Control Valve
Controls flow in internal cavities

Scoring
Scratch

Shock Load
Shake or jar

Spalling
Flaking or chipping

Subassembly
An assembled unit that fits into a larger unit

Supply Line
Line that connects pump to steering gear

Twisted Serrations
Output shaft serrations damaged by impact overload. Serrations can be twisted at the area between the large diameter of the shaft and the end of the serrations.

TAS Steering Gear Service Manual

WRITE OR CALL FOR INFORMATION AND ADDED DETAILS CONCERNING YOUR INSTALLATION AND APPLICATIONS.

PHONE 3174235377

FAX: 317.429.1868

WRITE TRW **Commercial Steering Division**
P O Box 60
800 Heath Street
Lafayette, IN 47902

Price: $4,50

Overhaul Manual

VICKERS

Vane Pump

V10, V20, V10F, V10P, V20F and V20P Series

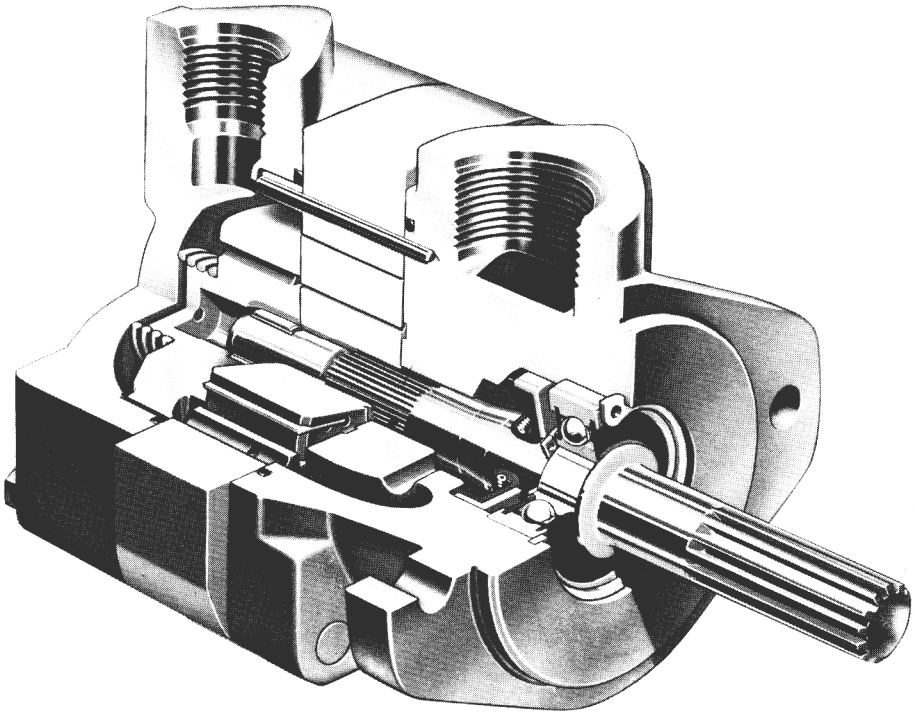

Revised 12-01-87

I-3143-S

© Vickers, Incorporated 1993
All Rights Reserved

TABLE OF CONTENTS

Section		Page
I	INTRODUCTION	
	A. Purpose of Manual	...2
	B. General Information	...2
II	DESCRIPTION	
	A. General	...4
	B. Assembly and Construction	4
	C. Flow Control and Relief Valve	4
	D. Priority Valve	...4
	E. Application	...4
111	PRINCIPLES OF OPERATION	
	A. Pumping Cartridge	...4
	B. Hydraulic Balance	...5
	C. Pressure Plate	...5
	D. Flow Control and Relief Valve	5
	E. Priority Valve Operation	6
IV	INSTALLATION AND OPERATING INSTRUCTIONS	
	A. Installation Drawings	6
	B. Drive Connections	...6
	C. Shaft Rotation	...7
	D. Piping and Tubing	...7
	E. Hydraulic Fluid Recommendations.	7
	F. Overload Protection	...7
	G. Port Positions	...7
	H. Start-Up	...8
V	SERVICE INSPECTION AND MAINTENANCE	
	A. Service Tools	...8
	B. Inspection	...8
	C. Adding Fluid To The System...	8
	D. Adjustments	...8
	E. Lubrication	...8
	F. Replacement Parts	...8
	G. Trouble -Shooting	...8
VI	OVERHAUL	
	A. General	...8
	B. Disassembly	...8
	C. Inspection and Repair...	...10
	D. Assembly	..10
V-II	TESTING	...12

A. PURPOSE OF MANUAL

This manual has been prepared to assist the users of Vickers balanced vane type hydraulic single pumps in properly installing, maintaining and repairing their units. In the sections which follow, the single pumps are described in detail, their theory of operation is discussed and instructions are given for their proper installation, maintenance and overhaul.

The general series of models covered are V1O, V20, V1OF, V1OP, V20F, and V20P. The information given applies to the latest design configurations listed in Table 1. Earlier designs are covered only insofar as they are similar to the present equipment.

B. GENERAL INFORMATION

1. Related Publications - Service parts information and installation dimensions are not contained in this manual. The parts catalogs and installation drawings listed in Table 1 are available from any Vickers Application Engineering office, or from:

Vickers, Incorporated
1401 Crooks Road
Troy, MI 48084

2. Model Codes - There are many variations within each basic model series, which are covered by vari - ables in the model code. Table 2 is a complete breakdown of the code covering these units. Service inquiries should always include the complete unit model number, which is stamped on the pump cover.

TAB LE 1.
PARTS CATALOGS AND INSTALLATION DRAWINGS

MODEL SERIES	PARTS DRAWING	INSTALLATION DRAWING
V10	M-2005-S	MB-53
V10F		
V10P		
V20	M-2004-S	MB-53
V20F		
V20P		

HYDRAULIC OIL RE COMMEN - DATIONS	INDUSTRIAL APPLICATIONS	MOBILE APP LIBATIONS
	I-286-S	M-2950-S

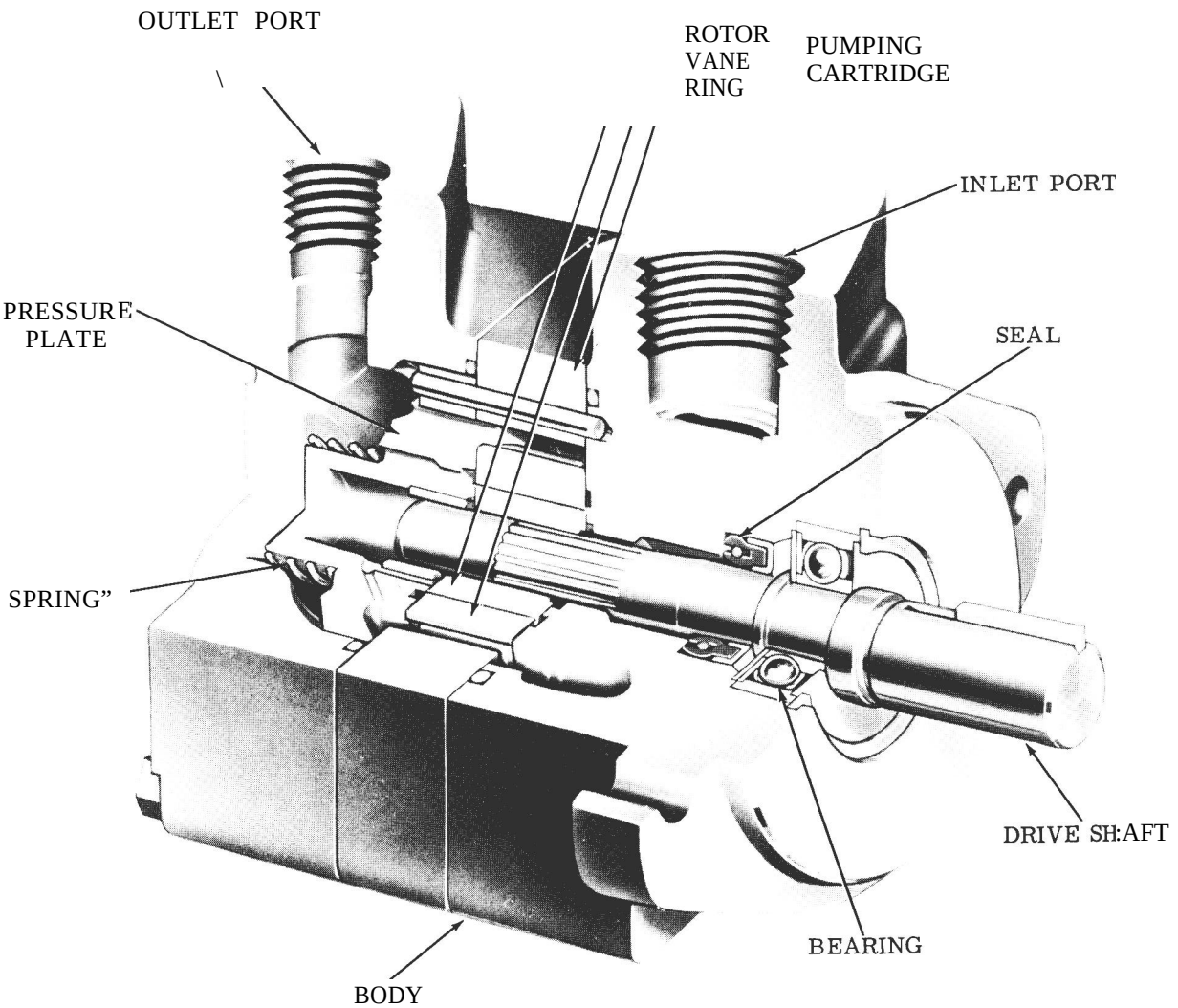

Figure 1

MODEL CODE BREAKDOWN

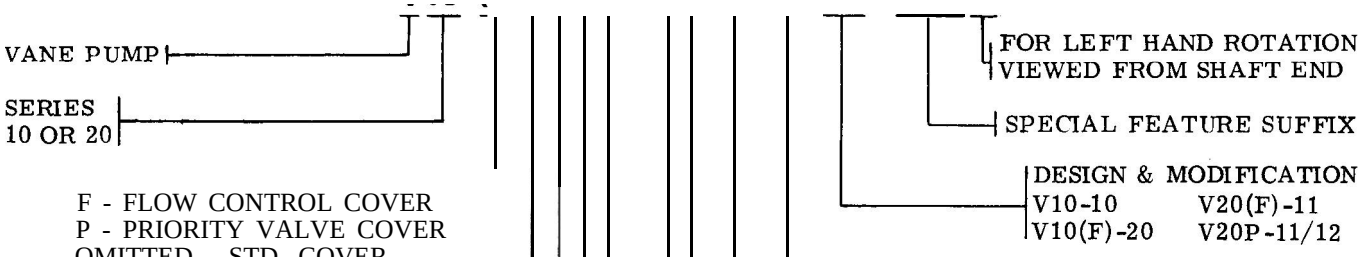

F - FLOW CONTROL COVER
P - PRIORITY VALVE COVER
OMITTED - STD. COVER

MOUNTING
1-2 BOLT FLANGE (SAE "A" SIZE)
2-FOOT BRACKET AT 12 O'CLOCK
(VIEWED FROM THE SHAFT END)
23-FOOT BRACKET AT 3 O'CLOCK
26-FOOT BRACKET AT 60' CLOCK
29-FOOT BRACKET AT 90' CLOCK

INLET PORT		
CODE	MODEL	SIZE
E	V20	1.5" Dia. -2 BOLT FLG.
F		1.156" Dia. -2 BOLT FLG.
H	V10	1" O.D. TUBE CONN.
K		1.3125"-12 UN 2B THD.
P		1" N.P.T.F.
	V20	1.25" N.P.T.F.
R		1" N.P.T.F.
S	V10	1.3125"-12 STR. THD.
	V20	1.625"-12 UN 2B THD.
T	V10	1.1875"-12 STR. THD.

FLOW RATE THROUGH ORIFICE IN COVER
2-2 GPM
3-3 GPM (V10F ONLY)
4-4 GPM
5-5 GPM (V10F ONLY)
6-6 GPM
7-7 GPM (V10F ONLY)
8-8 GPM (V20F ONLY)

PRESSURE PORT POSITIONS
VIEW FROM COVER END
A-OPPOSITE INLET CONNECTION.
B -90° COUNTERCLOCKWISE FROM INLET CONNECTION
C-INTJNE WITH INLET
D- 90 °CLOCKWISE FROM INLET CONNECTION

RING CAPACITY-1200 RPM- 1OOPSI

(V10)	(V20)
1 -1 USGPM	6 -6 USGPM
2 -2 USGPM	7 -7 USGPM
3 -3 USGPM	8 -8 USGPM
4 -4 USGPM	9 -9 USGPM
5 -5 USGPM	11 -11 USGPM
6 -6 USGPM	12 -12 USGPM
7 -7 USGPM	13 -13 USGPM

SHAFTS
1 -STR. KEYED
3 -THD.
4-THD.
6-STR. STUB-KEYED
11 -SPLINE -9 TOOTH
12 -SPLINE -13 TOOTH
15-SPLINE -13 TOOTH
27 -TANG
34-THD.
38-SPLINE-11 TOOTH

		FLOW CONTROL COVER		OUTLET PORT CONNECTIONS PRIORITY VALVE COVER		
CODE	STANDARD COVER	PRESSURE	TANK	PRIMARY OUTLET	SECONDARY OUTLET	TANK
K	——	——	——	9/16-18 ST. THD. (V10P)	3/4-16 ST. THD. (V10P)	9/16-18 ST. THD. (V10P)
P	1/2 IN. NPT THD. (V10ONLY)	3/4-16 ST. THD.	1/2 IN. NPT THD.	—	——	——
	3 4 IN. +NPT THD. (V20 ONLY)	V10F ANC V20F	V10F AND V20F	—	——	——
S	3/4-16 ST. THD.	——	——		——	——
	1 1/16-12 ST. THD. (V20 ONLY)	3/4-16 ST. THD. (V20F)	1/16-12 ST. THD. (V20F)	—	——	——
T	——	3/4-16 ST. THD. (V10F)	3/4-16 ST. THD. (VlOF)	3/4-16 ST. THD. (V20P)	7/8-14 ST. THD. (V20P)	3/4-16 ST. THD. (V20P)

Section II - DESCRIPTION

A. GENERAL

Pumps in this series are used to develop hydraulic fluid flow for the operation of Mobile and Industrial equipment. The positive displacement pumping cartridges are the rotary vane type with shaft side loads hydraulically balanced. The flow rate depends on the pump size and the speed at which it is driven.

All units are designed so that the direction of rotation, pumping capacity and port positions can be readily changed to suit particular applications.

B. ASSEMBLY AND CONSTRUCTION

The V10 series pump illustrated in the cut-a-way of Figure 1 is representative of all single pumps in this series. The unit consists principally of a ported body, a ported cover and a pumping cartridge. Components of the pumping cartridge are an elliptical cam ring, a slotted rotor splined to fit the drive shaft and twelve vanes fitted to the rotor slots.

The pumping cartridge cam ring is sandwiched between the body and cover. A ball bearing and bushing located in the body and pressure plate respectively support each end of the drive shaft and center the rotor within the cam ring. As the drive shaft is driven by the prime mover, the rotor and vanes generate flow by carrying fluid around t he elliptical cam ring contour. Fluid enters the cartridge through the inlet port in the body and is discharged through the pressure plate into the outlet port of the cover.

C. FLOW CONTROL AND RELIEF VALVE

V10 and V20 pumps are available with an integral Flow Control and Relief Valve in the pump cover. This limits the fluid flow in the system to a maximum pre - scribed rate and prevents excessive pressure build-up. Fluid not required in the system is recirculated to tank.

D. PRIORITY VALVE

V10 and V20 pumps are also available with a priority valve located in the pump cover. The priority valve maintains nearly a constant flow to a primary circuit and diverts the reimaining flow to a secondary circuit. Flow going to the secondary circuit is determined by pump delivery. The primary circuit is protected by an integral relief valve but an external relief valve must be provided for the secondary circuit.

E . APPLICATION

Pump ratings in GPM as shown in the model coding are at 1200 RPM and 100 PSI. For ratings at other speeds, methods of installation and other application information, Vickers Application Engineering personnel should be consulted.

Section III - PRINCIPLES of OPERATION

A. PUMPING CARTRIDGE

As mentioned in Section 11, fluid flow is developed by the pumping cartridge. The action of the cartridge is illustrated in Figure 2. The rotor is driven within the cam ring by the driveshaft, which is coupled to a power source. As the rotor turns, centrifugal force causes the vanes to follow the elliptical inner surface of the cam ring.

Radial movement of the vanes and turning of the rotor cause the chamber volume between the vanes to increase as the vanes pass the inlet sections of the cam ring. This results in a low pressure condition which allows atmospheric pressure to force fluid into the chambers. (Fluid outside the inlet is at atmospher - ic pressure or higher.)

This fluid is trapped between the vanes and carried

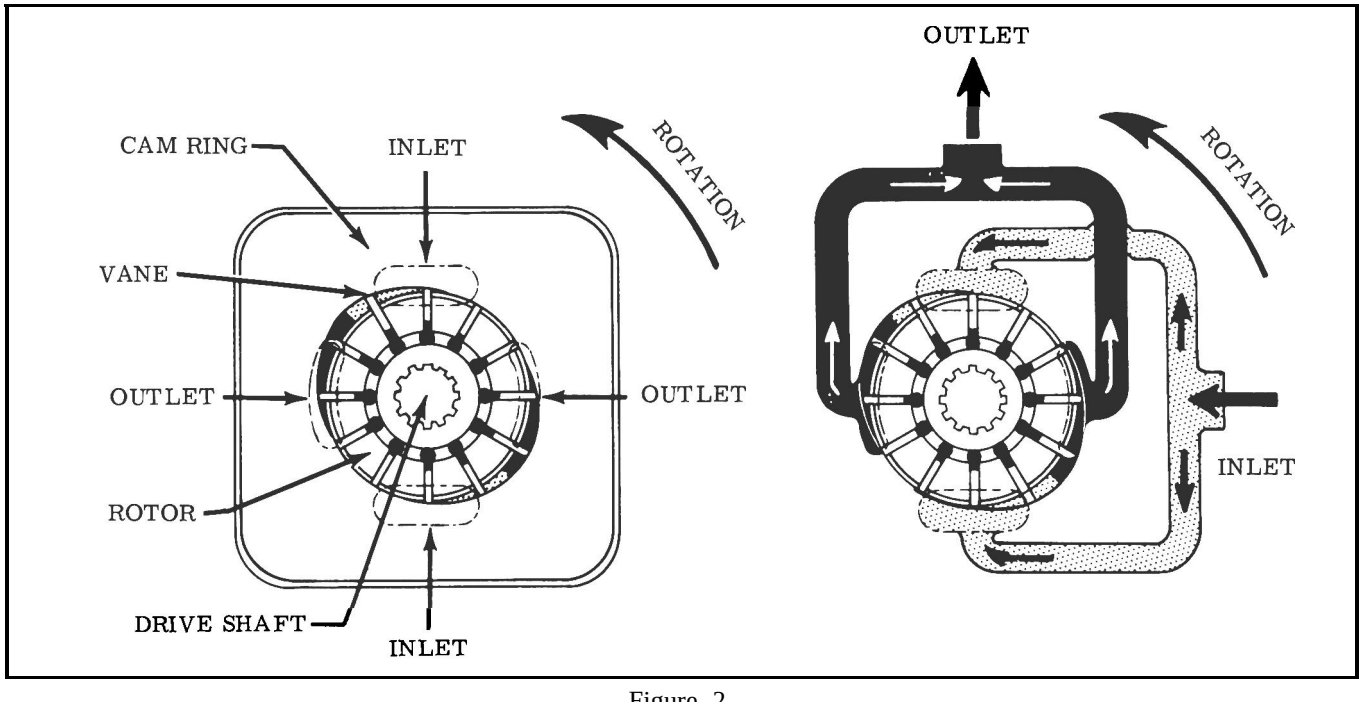

Figure 2

past the large diameter or dwell section of the cam ring. As the outlet section is approached, the cam ring diameter decreases and the fluid is forced out into the system. System pressure is fed under the vanes, assuring their sealing contact against the cam ring during normal operation.

B. HYDRAULIC BALANCE

The pump cam ring is shaped so that the two pumping chambers are formed diametrically opposed. Thus, hydraulic forces which would impose side loads on the shaft are cancelled.

C. PRESSURE PLATE

The pressure plate seals the pumping chamber as shown in Figure 3. A light spring holds the plate against the cartridge until pressure builds up in the system. System pressure is effective against the area at the back of the plate, which is larger than the area exposed to the pumping cartridge. Thus, an unbalanced force holds the plate against the cartridge, sealing the cartridge and providing the proper running clearance for the rotor and vanes.

D. FLOW CONTROL AND RELIEF VALVE

1. Maximum flow to the operating circuit and maximum system pressure are determined by the integral flow control and relief valve in a special outlet cover used on some Vv10 and V20 pumps. This feature is illustrated pictorially in Figure 4. An orifice in the cover limits maximum flow. A pilot-operated type relief valve shifts to divert excess fluid delivery to tank, thus limiting the system pressure to a predetermined maximum.

2. Figure 4A shows the condition when the total pump delivery can be passed through the orifice.

This condition usually occurs only at low drive speeds. The large spring chamber is connected to the pressure port through an orifice. Pressure plus spring load in this chamber slightly exceeds pressure at the

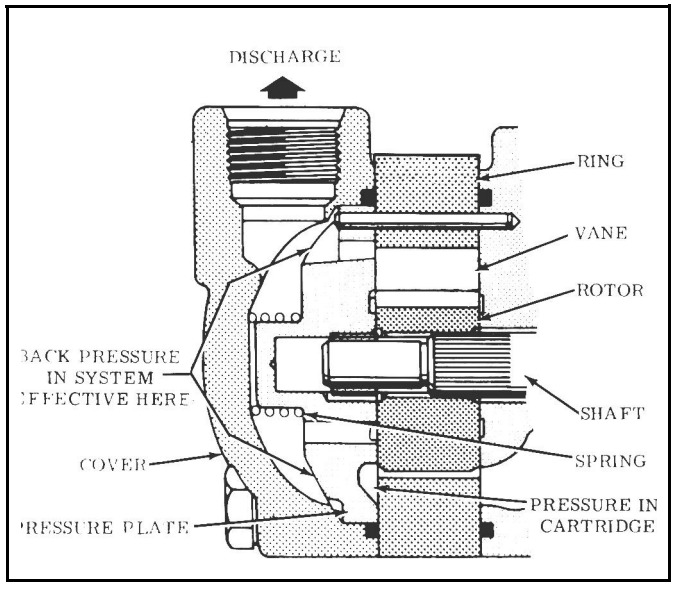

Figure 3

other end of the relief valve spool and the spool re - mains closed. Pump delivery is blocked from the tank port by the spool land.

3. When pump delivery is more than the flow rate determined by the orifice plug, pressure builds up across the orifice and forces the spool open against the light spring. Excess fluid is throttled past the spool to the tank port as shown in Figure 4B.

4. If pressure in the system builds up to the relief valve setting (Figure 4C), the pilot poppet is forced off its seat. Fluid in the large spring chamber flows through the spool and out to tank. This flow through the small sensing orifice, causes a pressure drop and prevents pressure in the large spring area from increasing beyond the relief valve setting. As pressure against the right end of the spool starts to exceed the relief valve setting, the pressure differential forces the spool to the left, against the light spring, porting the full pump flow to tin-k.

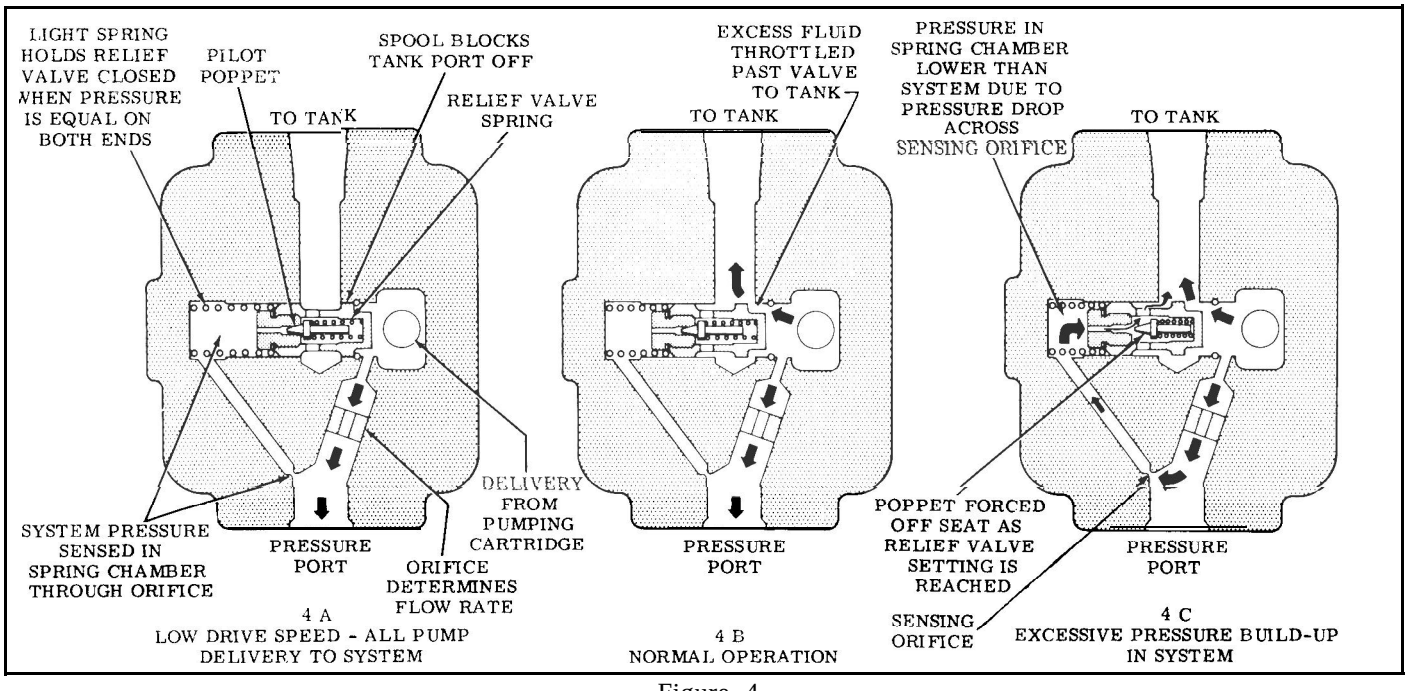

Figure 4

E. PRIORITY VALVE OPERATION

Referring to the V20P Cover Schematic, Figure 5, pressure is sensed in cavities “A”, “B” and “C” . Primary flow into cavity “A” is restricted by the controlled flow orifice “O’. Secondary flow will be zero until the pump flow rate through orifice “O’ develops a pressure differential across the control spool.

When pump delivery is increased, pressure builds up in cavities “B” and “C” because of the resistance to flow through orifice “O’. This causes the spool to shift toward cavity “A” against the spring. The amount of spool shift is proportional to the pressure differential between cavities “A” and “C”.

Flow from the primary port is held to an almost constant volume, as determined by orifice “O’, and the metering action of the control spool at area “ D“. Flow to the secondary port varies with pump delivery. Metering area “E” diverts excess flow to the secondary port.

This single spool design cannot give precisely controlled flow to the primary circuit because of the effects of varying conditions of flows and pressures. For example: If the primary circuit is operating at 1000 PSI and the secondary at 100 PSI, the spool must be metering at “E”. However, if primary pressure is 100 PSI and secondary is 1000 PSI, the spool must be metering at “D”. As the two systems approach the same pressure, the probability of flow fluctuation increases because the spool may shift between these two metering points.

CAUTION

The pump has a built-in relief valve in the primary circuit. However, an external relief valve must be provided for the secondary circuit to protect the pump .

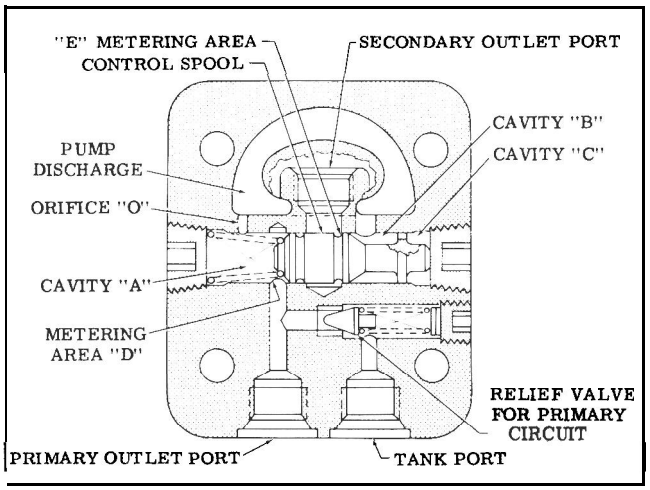

Figure 5

Section IV
INSTALLATION and OPERATING INSTRUCTIONS

A. INSTALLATION DRAWINGS

The installation drawings listed in Table 1 show the correct installation dimensions and port locations.

B. DRIVE CONNECTIONS

CAUTION

Pump shafts are designed to be installed in couplings, pulleys, etc. , with a slip fit or very light tap. Pounding can injure the bearings. Shaft tolerances are shown on the pump installation drawings. (See Table 1.)

1. Direct Mounting - A pilot on the pump mounting flange (Figure 6) assures correct mounting and shaft alignment. Make sure the pilot is firmly seated in the accessory pad of the power source. Care should be exercised in tightening the mounting screws to pre - vent misalignment.

If gaskets are used, they should be installed carefully and should lay flat. Shaft keys and couplings must be properly seated to avoid slipping and possible shearing.

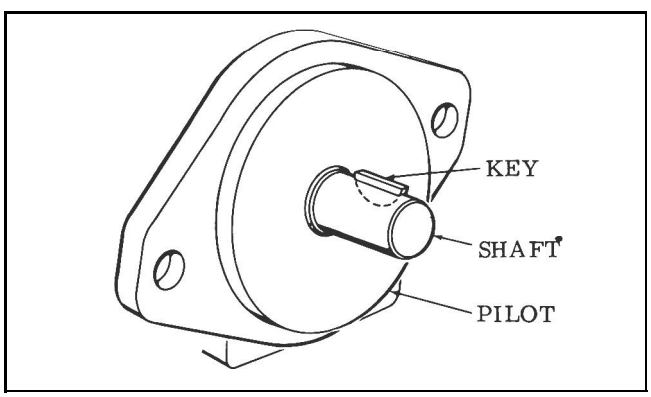

Figure 6

2. Indirect Drive - Chain, spur gear or v-belt pulley drives may also be used with these pumps. Flat belt drives are not recommended because of the possibility of slipping.

To prevent excessive side loads on pump bearings, it is important to check for correct alignment and guard against excessive belt or chain tension.

For best results on indirect drive applications, use the largest permissible puny diameter at the pump and position it close as possible to the pump mounting face. For specific indirect drive application data, contact your Vickers Application Engineer.

C. SHAFT ROTATION

Pumps are normally assembled for right-hand (clockwise) rotation as viewed from the shaft end. A pump made for left-hand rotation is identified by an “ L“ in the model code (See Table 2).

NOTE

These pumps must be driven in the direction of the arrows cast on the pump ring. If it is desired to change the direction of drive rotation, it is necessary to re - verse the ring. (See Section VI-B -D and Figure 10.)

CAUTION

Never drive a pump in the wrong direction of rotation. Seizure may result, necessitating expensive repairs.

D. PIPING AND TUBING

1. All pipes and tubing must be thoroughly cleaned before installation. Recommended methods of cleaning are sand blasting, wire brushing and pickling.

NOTE

For instructions on pickling refer to instruction sheet 1221-S.

2. To minimize flow resistance and the possibility of leakage, only as many fittings and connections as are necessary for proper installation should be used.

3. The number of bends in tubing should be kept to a minimum to prevent excessive turbulence and friction of oil flow. Tubing must not be bent too sharply. The recommended radius for bends is three times the inside diameter of the tube.

E. HYDRAULIC FLUID RECOMMENDATIONS

GENERAL DATA

Oil in a hydraulic system performs the dual function of lubrication and transmission of power. It constitutes a vital factor in a hydraulic system, and careful selection of it should be made with the assistance of a reputable supplier. Proper selection of oil assures satisfactory life and operation of system components with particular emphasis on hydraulic pumps. Any oil selected for use with pumps is acceptable for use with valves or motors.

Data sheets for oil selection are available from Vickers,Inc. Technical Publications, Troy, MI. 48084.

For Industrial Applications order data sheet I-286 -S. For Mobile Applications order M-2950-S.

The oil recommendations noted in the data sheets are based on our experience in industry as a hydraulic component manufacturer.

Where special considerations indicate a need to depart from the recommended oils or operating conditions, see your Vickers representative.

CLEANLINESS

Thorough precautions should always be observed to insure the hydraulic system is clean:

A. Clean (flush) entire new system to remove paint, metal chips, welding shot, etc.

B. Filter each change of oil to prevent introduc - tion of contaminants into the system.

C. Provide continuous oil filtration to remove sludge and products of wear and corrosion generated during the life of the system.

D. Provide continuous protection of system from entry of airborne contamination, by sealing the system and/or by proper filtration of the air.

E. During usage, proper oil filling and servicing of filters, breathers, reservoirs, etc., cannot be over emphasized.

F. Thorough precautions should be taken, by proper system and reservoir design, to insure that aeration of the oil will be kept to a minimum.

SOUND LEVEL

Noise is only indirectly affected by the fluid selec - tion, but the condition of the fluid is of paramount importance in obtaining optimum reduction of system sound levels.

Some of the major factors affecting the fluid conditions that cause the loudest noises in a hydraulic system are:

1. Very high viscosities at start-up temperatures can cause pump noises due to cavitation.

2. Running with a moderately high viscosity fluid will impede the release of entrained air. The fluid will not be completely purged of such air in the time it remains in the reservoir before recycling through the system.

3. Aerated fluid can be caused by ingestion of air through the pipe joints of inlet lines, high velocity discharge lines, cylinder rod packings, or by fluid discharging above the fluid level in the reservoir . Air in the fluid causes a noise similar to cavitation .

4. Contaminated fluids can cause excessive wear of internal pump parts which may result in increased sound levels.

F. OVERLOAD PROTECTION

A relief valve must be installed in the system, unless it is an integral part of the pump. The relief valve limits pressure in the system to a prescribed maximum and protects the components from exces - sive pressure. The setting of the relief valve depends on the work requirements of the system components.

G. PORT POSITIONS

The pump cover can be assembled in four positions with respect to the body. A letter in the model

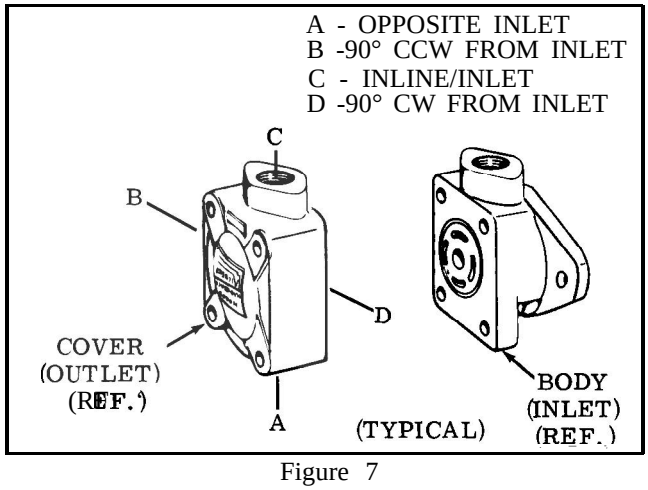

Figure 7

code (Table 2) identifies the cover position as shown in Figure 7.

Disassembly and assembly procedures are in Section VI -B and D.

H. START -UP

With a minimum drive speed of 600 RPM, a pump should prime almost immediately, if provision is made to initially purge the air from the system. Failure to prime within a reasonable length of time may result in damage due to lack of lubricat ion. Inlet lines must be tight and free from air leaks. However, it may be necessary to crack a fitting on the outlet side of the pump to purge entrapped air.

Section V
SERVICE , INSPECTION AND MAINTENANCE

A. SERVICE TOOLS

No special tools are required to service these pumps.

B. INSPECTION

Periodic inspect ion of the fluid condition and tube or piping connections can save time-consuming breakdowns and unnecessary parts replacement. The following should be checked regularly.

1. All hydraulic connections must be kept tight. A loose connection in a pressure line will permit the fluid to leak out. If the fluid level becomes so low as to uncover the inlet pipe opening in the reservoir, ex - tensive damage to the pump can result. In suction or return lines, loose connections permit air to be drawn into the system, resulting in noisy and/or erratic operation.

2. Clean fluid is the best insurance for long service life. Therefore, the reservoir should be checked periodically for dirt or other contaminants.

If the fluid becomes contaminated the system should be thoroughly drained and the reservoir cleaned before new fluid is added.

3. Filter elements also should be checked and re - placed periodically. A clogged filter element results in a higher pressure drop. This can force particles through the filter which would ordinarily be trapped, or can cause the by-pass to open, resulting in a partial or complete loss of filtration.

4. A pump which is running excessively hot or noisy is a potential failure. Should a pump become noisy or overheated, the machine should be shut down immediately and the cause of improper operation corrected.

C. ADDING FLUID TO THE SYSTEM

When hydraulic fluid is added to replenish the sys - tern, it should always be poured through a fine wire screen (200 mesh or finer).

It is important that the fluid be clean and free of any substance which could cause improper operation or wear of the pump or other hydraulic units. There - fore, the use of cloth to strain the fluid should be avoided to prevent lint getting into the system.

D. ADJUSTMENTS

No periodic adjustments are required, other than to maintain proper shaft alignment with the driving medium.

E. LUBRICATION

Internal lubrication is provided by the fluid in the system. Lubrication of the shaft couplings should be as specified by their manufacturers.

F. REPLACEMENT PARTS

Reliable operation throughout the specified oper - sting range is assured only if genuine Vickers parts are used. Sophisticated design processes and material are used in the manufacture of our parts. Substitutions may result in early failure. Part numbers are shown in the parts cat slogs listed in Table 1.

G. TROUBLE -SHOOTING

Table 6 lists the common difficulties experienced with vane pumps and hydraulic systems. It also indicates the probable causes and remedies for each of the troubles listed.

It should always be remembered that many apparent pump failures are actually the failures of other parts of the system. The cause of improper operation is best diagnosed with adequate testing equipment and a thorough understanding of the complete hydraulic system.

Section VI - OVERHAUL

WARNING

Before breaking a circuit connection, make certain that power is off and system pres - sure has been released. Lower all vertical cylinders, discharge accumulators and block any load whose m o v e m e nt could generate pressure.

A. GENERAL

Plug all removed units and cap all lines to prevent the entry of dirt into the system. During disassembly, pay particular attention to identification of the parts, especially the cartridges, for correct assembly. Pump bearings are pressed in the bodies or on the shafts and should not be removed unless defective. Figure 8 is an exploded view which shows the proper relationship of the parts for disassembly and assem - bly. Refer to Figure 1 and Figure 8 for the correct assembled relationship of the parts.

B. DISASSEMBLY

1. Disassembly of Basic Pump-See Figure 8. If a foot bracket is used, remove before dismantling the pump. Clamp the pump body in a vise (not too

TABLE 6 - TROUBLE SHOOTING CHART

TROUBLE	PROBABLE CAUSE	REMEDY
PUMP NOT DELIVERING FLUID	DRIVEN IN THE WRONG DIRECTION OF ROTATION	The drive direction must be changed immediately to prevent seizure. Fig - ure 10 shows the correct ring position for each direction of rotation.
	COUPLING OR SHAFT SHEARED OR DISENGAGED	Disassemble the pump and check the shaft and cartridge for damage. (See Section VI.) Replace the necessary parts.
	FLUID INTAKE PIPE IN RE - SERVOIR RESTRICTED	Check all strainers and filters for dirt and sludge. Clean if necessary.
	FLUID VISCOSITY TOO HEAVY TO PICK UP PRIME	Completely drain the system. Add new filtered fluid of the proper viscosity .
	AIR LEAKS AT THE INTAKE. PUMP NOT PRIMING	Check the inlet connections to deter - mine where air is being drawn in. Tighten any loose connections. See that the fluid in the reservoir is above the intake pipe opening. Check the minimum drive speed which may be too slow to prime the pump.
	RELIEF VALVE STUCK OPEN. (MODELS WITH INTEGRAL RE - LIEF VALVE ONLY)	Disassemble the pump and wash the valve in clean solvent. Return the valve to its bore and check for any stickiness. A gritty feeling on the valve periphery can be polished with crocus cloth. Do not remove excess material, round off the edges of the lands or attempt to polish the bore. Wash all parts and reassemble the pump.
	VANE (S) STUCK IN THE RO - TOR SLOT(S)	Disassemble the pump. Check for dirt or metal chips. Clean the parts thoroughly and replace any damaged pieces. If necessary flush the system and refill it with clean fluid.
[INSUFFICIENT PRESSURE BUILD-UP	SYSTEM RELIEF VALVE SET TOO LOW	Use a pressure gage to correctly ad- just the relief valve.
	COMPLETE LOSS OF FLOW FROM PUMP.	-A valve is stuck open permitting free flow to tank. -Broken inlet or pressure line. -Actuator bypassing the full flow. (Motor valve plate lift)
PUMP MAKING NOISE	PUMP INTAKE PARTIALLY BLOCKED	Service the intake strainers. Check the fluid condition and, if necessary, drain and flush the system. Refill with clean fluid.
	AIR LEAKS AT THE INTAKE OR SHAFT SEAL. (OIL IN RESERVOIR WOULD PROBABLY BE FOAMY)	Check the inlet connections and seal to determine where air is being drawn in. Tighten any loose connections and re - place the seal if necessary. See that the fluid in the reservoir is above the intake pipe opening.
	PUMP DRIVE SPEED TOO SLOW OR TOO FAST	Operate the pump at the recommended speed.
	COUPLING MISALIGNMENT	Check if the shaft seal bearing or other parts have been damaged. Replace any damanged parts. Realign the coupled shafts.

tightly), cover end up, and remove the four cover screws. Note the position of the cover port with re - spect to the body port before lifting off the cover and "O" ring. (See paragraph 2 for disassembly of flow control covers and paragraph 3 for disassembly of the priority valve covers).

Remove the pressure plate and spring. Note the position of the ring for correct reassembly. Lift off the ring and remove the locating pins. Separate the vanes from the rotor and remove the rotor from the shaft.

Turn the pump body over then remove the shaft key and the snap ring which retains the bearing. Tap with a soft hammer on the splined end of the shaft to force the shaft out of the body. Remove the small snap ring, located on the shaft, behind the bearing. Support the bearing inner race and press the shaft out of the bear- ing. Pull the shaft seal out of the body with a suitable hooked tool.

CAUTION

Do not disassemble the relief valve S/A removed in the following step. The unit is factory set and could mal- function if disassembled.

2. Disassembly of Flow Control and Relief Valve Covers - See Figure 8. Remove the plug (and "O' 'ring latest design V10 models) from the snap ring side of the cover. Then remove the plug (and "O'ring latest design VI0 models), that releases the spring and relief valve S/A. Insert a suitable tool from the snap ring end of the bore. Slide the relief valve S/A from the cover. Remove the snap ring with care - DO NOT scratch the bore.

3. Disassembly of the Priority Valve Cover - See Figure 8. Remove the plug (and "O''ring latest design V10/V20 models) and spring from one end of the priority valve bore, and the plug (and "O''ring latest design VIO/V20 models) from the other end of the bore. Insert a suitable tool into the snap ring end of the bore (Snap ring used with pipe thread plugs only) and slide the priority valve spool from the cover. If the snap ring exists, remove it from the cover. Disassemble the relief valve by removing the plug spring poppet and shims. On later designs, a spring guide is used. See Figure 8. DO NOT remove the seat unless inspection of the poppet contact area reveals a problem in the seat area. If removal of the seat is required, thread the seat with a suitable tap approximately 3/8 inch into the seat. Thread a long bolt into the seat and pull the bolt and seat from the bore with a small gear puller.

C. INSPECTION AND REPAIR

CLEANING. All parts must be throughly cleaned and kept clean during inspection and assembly. The close tolerance of the parts makes this requirement more stringent than usual. Clean all removed parts, using a commercial solvent that is compatible with the system fluid. Compressed air may be used in clean- ing, but it must be filtered to remove water and con- tamination. Clean compressed air is particularly use- ful in cleaning spools, orifices, and cover passages.

1. Discard the used shaft seal and all "O" rings. Wash the metal parts in a solvent, blow them dry with filtered compressed air and place them on a clean sur- face for inspection.

2. Check the wearing surfaces of the body, pres- sure plate, ring and rotor for scoring and excessive wear. Remove light score marks by lapping. Re - place any heavily scored or badly worn parts.

3. Inspect the vanes for burrs, wear and excess- sive play in the rotor slots. Replace the vanes and rotor if the slots are worn.

4. Check the bearings for wear and looseness. Rotate the bearings while applying pressure to check for pitted or cracked races.

5. Inspect the oil seal mating surface on the shaft for scoring or wear. If marks on the shaft cannot be removed by light polishing, replace the shaft.

6. Flow Control Cover: Check the relief valve sub-assembly for free movement in the cover bore. Remove burrs from the valve by polishing, but DO NOT round off the corners of the lands. Do not at- tempt to rework the valve bore. If the bore is dam- aged, replace the cover.

7. Priority Valve Cover: Inspect the priority valve spool and bore for burrs. Remove burrs from the spool by light polishing with crocus or # 500 grit paper. DO NOT round off sharp corners of the lands. Inspect the cover bore for scratches, wear and/or a pitted surface. DO NOT attempt to rework the bore. If the bore is damaged, replace the cover. The pri- ority valve spool must fit and move within the bore without evidence of bind. Rotate the spool through 360 'while inspecting for bind. Inspect the" snap ring for damage. (V20 units only). If worn or bent, re- place with a new snap ring. If the snap ring is bent, inspect the snap ring groove in the cover for suffi- cient depth and rounded edges of the snap ring groove. If the groove is defective, replace the cover.

Integral Relief Valve: Inspect the spring. The spring ends must be paralled to prevent cocking of the poppet. The poppet requires a close inspection in the seat contact area. A slight wear pattern should exist around the poppet at the area of seat contact. If the wear pattern is broken, a possible leakage path exists between the poppet and seat. Inspect the seat for pos - sible errosion or other defects. Refer to the seat re - moval procedure if the seat is defective. (paragraph VI. B. 3)

D. ASSEMBLY

Coat all parts with hydraulic fluid to facilitate as- sembly and provide initial lubrication. Use small amounts of petroleum jelly to hold "O' rings in place during assembly.

IMPORTANT

During handling and shipping of the precision machined cartridge parts, it is possible to raise burrs on the sharp edges. All sharp edges on the parts of a new cartridge kit should be stoned prior to installation.

1. Assembly of Flow Control Cover - See Figure 8. Assemble the snap ring in place within the bore, (early design only) seat firmly in the groove . Insert the valve in the bore, small land first. Then install the spring and both plugs. Use new "0''rings if straight thread plugs are used.

2. Assembly of priority valve cover- See Figure 8. If the relief valve seat was removed, a new seat must be pressed into the body. Lubricate and insert the new seat chamfered end first into the cover open -

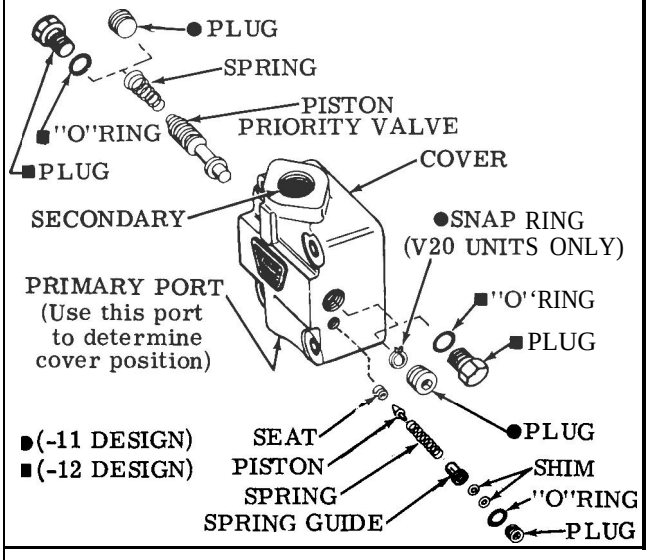

NOTE: Priority Cover Information:

V10-10 early models and V20-11 models use pipe threaded plugs.

V10-10 current design and V20-12 mode1s use straight threaded plugs and "O''ring seals.

Flow Control Cover Information

V10-20 early models and V20-11 models use pipe threaded plugs.

V10-20 current design uses straight threaded plugs with "0''rings. The V20 -11 is the current design and still uses pipe threaded plugs.

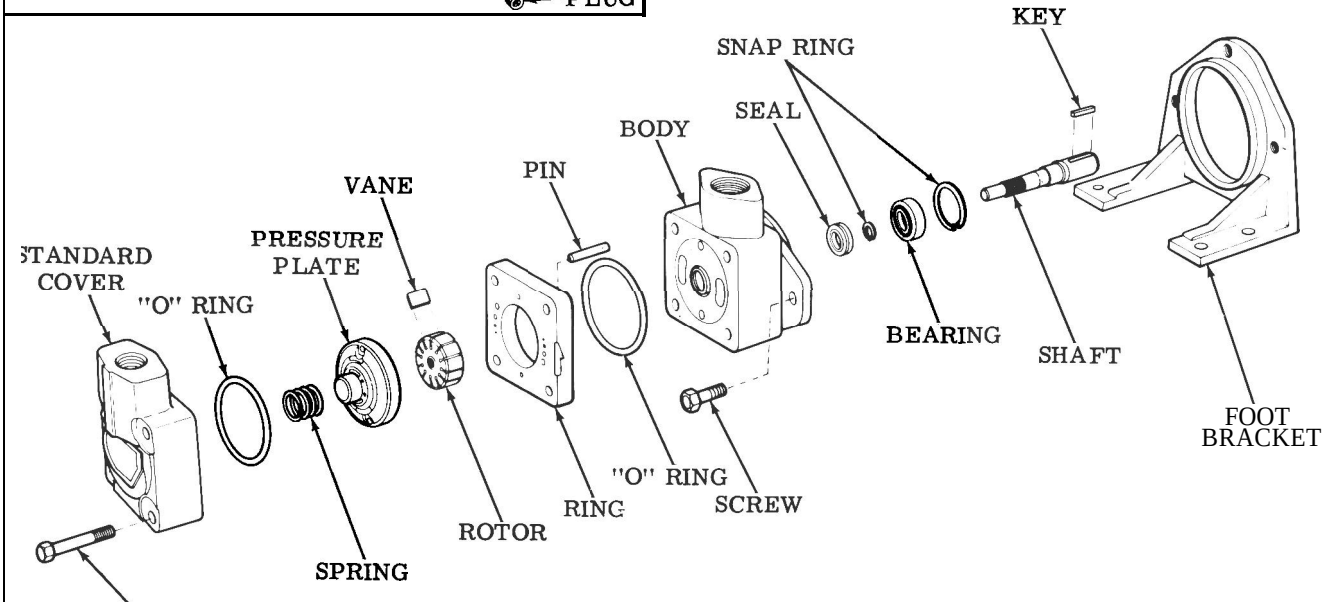

TORQUE TO:
V10-35-45 LB. FT.
V20-75-85 LB. FT.

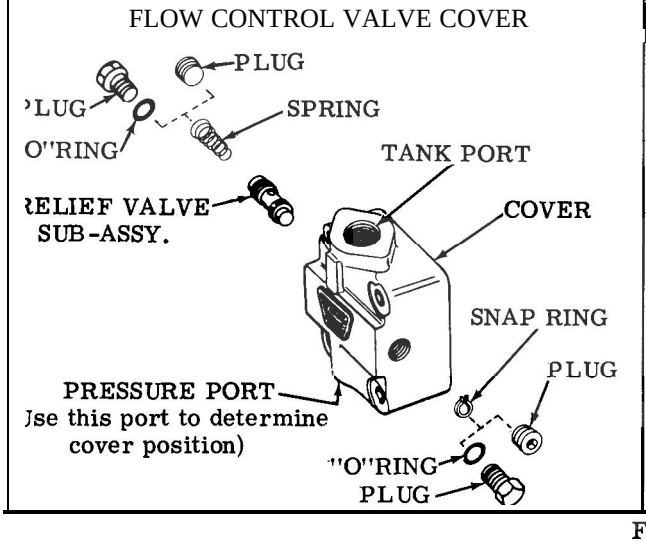

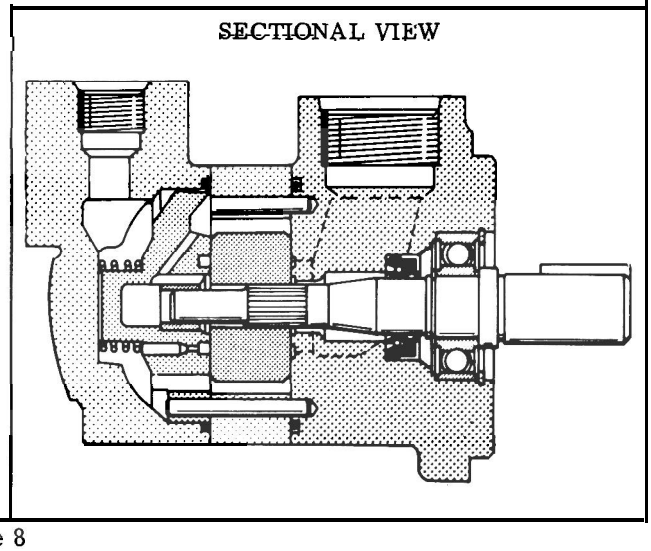

Figure 8

ing. Align square and press into place. Use a short length of brass rod as a pressing tool, to prevent seat damage. Clean the relief valve bore to remove chips and filings. Insert the poppet into the bore, align square and lightly tap the stem of the poppet to mate the poppet and seat. Install the spring, shims, and plug into the cover. (later design uses a spring guide and straight thread plug with "O'rings) Be sure to check the pressure setting of the relief valve against the model code. If the setting is out of tolerance, readjust by removing or adding shims. (Removing shimsreduces pressure while adding shims increases pressure.)

Priority Valve - Install the snap ring within the priority valve cover bore, (early V20 series only) ;make sure the snap ring is seated within its groove. Insert the priority valve spool, small land first, into the bore. Install plugs at each end of the bore and secure. Refer to Figure 8 for spool orientation.

3. Assembly of Pump - See Figure 8. Begin assembly by pressing the shaft into the front bearing while supporting the bearing inner race. Install the small snap ring on the shaft.

NOTE

Before assembling the shaft seal, determine the correct position of the sealing lip. (See Figure 9.) Seals are assembled with the garter spring toward the pumping cartridge. Press the seal firmly in place and lubricate the lip with petroleum jelly or other grease compatible with the system fluid. Slide the drive shaft into the body until the bearing is seated. Tap lightly on the end of the shaft if necessary. Install the snap ring.

Install new "O' rings in the body and cover. Insert the ring locating pins in the body and assemble the ring so that the arrow on the perimeter points in the direction of rotation. Check the assembly against Figure 10. Install the rotor on the shaft and insert the vanes in the rotor slots. Be certain the radius edges of the vanes are toward the cam ring.

Place the pressure plate on the locating pins and flat against the ring. Place the spring over the pressure plate, and then install the cover with the outlet port in the correct position. Tighten the cover screws to the torque shown in Figure 8. Rotate the shaft by hand to insure that there is no internal binding. Install the shaft key.

If a foot mounting is used, assemble the pump to its foot mounting. If a gasket is used, be certain it is flat to avoid misalignment of the shaft.

Section VII - TESTTNG

If a test stand is available, the pump should be tested at the recommended speeds and pressures shown on the installation drawing. (See Table 1).

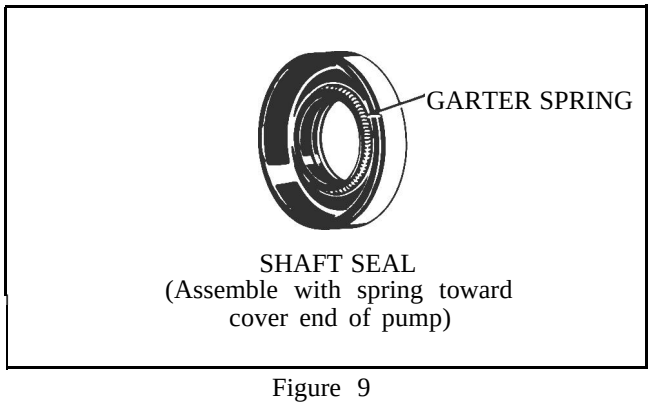

Figure 9

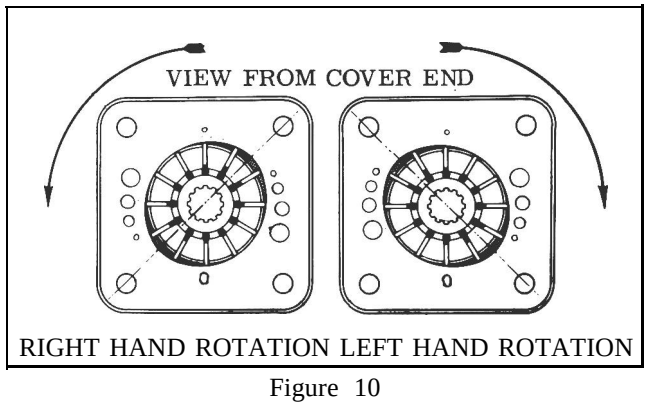

Figure 10

VICKERS

A TRINOVA Company

Vickers, Incorporated
5445 Corporate Drive
P.O. Box 302
Troy, Michigan 48007-0302
Phone: 810-641-4500
Fax: 810-641-4948

Printed in USA

Chart Your Way to Easy Steering

Steering System Troubleshooting Guide

Notice

This guide and the accompanying videotapes were prepared for the purpose of providing general advice concerning the diagnosis and correction of commercial vehicle steering related problems. These materials are intended for use by properly trained, professional mechanics, NOT “Do-it-Yourselfers”. These materials should be used in conjunction with service manuals provided by vehicle and component manufacturers. Diagnosis and correction of commercial vehicle steering related problems should only be handled by properly trained, professional mechanics who have the proper equipment, tools, instructions and know-how to perform the work properly and safely.

© TRW Inc., 1990

SECTION 16: SUSPENSION

CONTENTS

1. DESCRIPTION 16-3
2. AIR SPRING 16-4
   - 2.1 Inspection 16-4
   - 2.2 Removal 16-4
   - 2.3 Installation 16-4
3. SHOCK ABSORBER 16-5
   - 3.1 Inspection 16-5
   - 3.2 Removal 16-5
   - 3.3 Installation 16-6
4. RADIUS ROD 16-6
   - 4.1 Inspection 16-6
   - 4.2 Removal 16-6
   - 4.3 Bushing Removal 16-6
   - 4.4 Bushing Installation 16-7
   - 4.5 Installation 16-7
5. SWAY BAR 16-8
   - 5.1 Removal 16-8
   - 5.2 Installation 16-8
6. SUSPENSION AIR SYSTEM 16-8
   - 6.1 Description 16-8
   - 6.2 Inspection 16-9
   - 6.3 Air Line Test 16-9
   - 6.4 Air Tank Maintenance 16-9
7. SUSPENSION HEIGHT ADJUSTMENT 16-9
8. HEIGHT CONTROL VALVE 16-10
   - 8.1 Operation 16-10
     - 8.1.1 Loading Position 16-10
     - 8.1.2 Neutral Position 16-10
     - 8.1.3 Unloading Position 16-10
   - 8.2 Maintenance 16-10
     - 8.2.1 Removal and Installation 16-10
     - 8.2.2 Air Leakage Test 16-11
9. FRONT KNEELING (W/ FRONT HIGH-BUOY) SYSTEM 16-11
   - 9.1 Principles of Operation 16-11
   - 9.2 Maintenance 16-11
   - 9.3 Bellows Control and Exhaust Solenoid Valves 16-12
     - 9.3.1 Removal and Installation 16-12
10. REAR HIGH-BUOY SYSTEM 16-12
    - 10.1 Principles of Operation 16-12
    - 10.2 Maintenance 16-12

10.3 High-Buoy - Pressure Regulating Valve 16-12
10.3.1 Adjustment 16-13
10.3.2 Disassembly 16-13
10.3.3 Cleaning 16-13
10.3.4 Reassembly 16-13
11. LOW-BUOY SYSTEM 16-14
11.1 Principles of Operation 16-14
11.2 Maintenance 16-14
12. "LEVEL-LOW" LEVELING SYSTEM 16-14
12.1 Principles of Operation 16-14
12.2 Maintenance 16-14
13. TROUBLESHOOTING 16-15
14. PARTS SPECIFICATIONS 16-15
15. TORQUE SPECIFICATIONS 16-17

LIST OF ILLUSTRATIONS

FIG. 1: FRONT SUSPENSION COMPONENTS 16-3
FIG. 2: REAR SUSPENSION COMPONENTS 16-3
FIG. 3: AIR SPRING 16-4
FIG. 4: SHOCK ABSORBER 16-5
FIG. 5: TYPICAL SHOCK ABSORBER SETUP 16-6
FIG. 6: TYPICAL RADIUS ROD SETUP 16-6
FIG. 7: RADIUS ROD BUSHING REMOVAL 16-7
FIG. 8: RADIUS ROD BUSHING INSTALLATION 16-7
FIG. 9: RADIUS ROD INSTALLATION 16-7
FIG. 10: SWAY BAR 16-8
FIG. 11: HEIGHT CONTROL VALVE 16-9
FIG. 12: TYPICAL AIR SPRING CLEARANCE 16-10
FIG. 13: REGULATING VALVE 16-13

1. DESCRIPTION

The vehicle is provided with an air suspension system. The system consists of air springs, height control valves, radius rods, sway bars, tripod and shock absorbers (Fig. 1 and 2). The system operation is fully automatic and maintains a constant vehicle height regardless of load, or load distribution. The vehicle can also be equipped with systems such as :

- Front Kneeling (w/ Front High-Buoy);
- Front Kneeling (w/ Front High-Buoy) with Rear High-Buoy Combination;
- Front Kneeling (w/ Front High-Buoy) with Rear Low-Buoy Combination;
- Front Kneeling (w/ Front High-Buoy) with Rear High-Buoy/Low-Buoy Combination; and
- Level-Low.

For a description of all these systems, refer to the appropriate heading in this section.

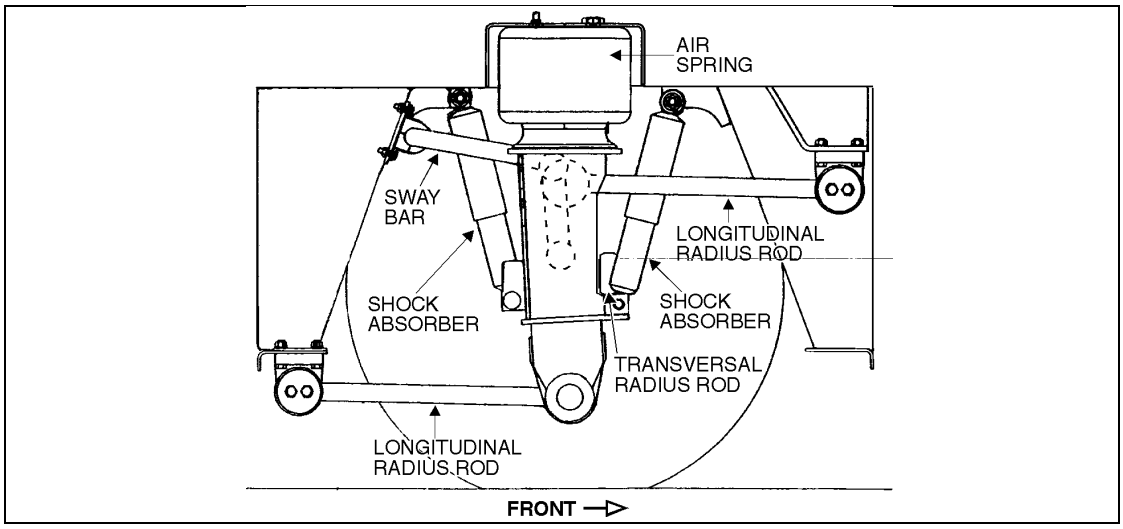

FIGURE 1: FRONT SUSPENSION COMPONENTS 16002

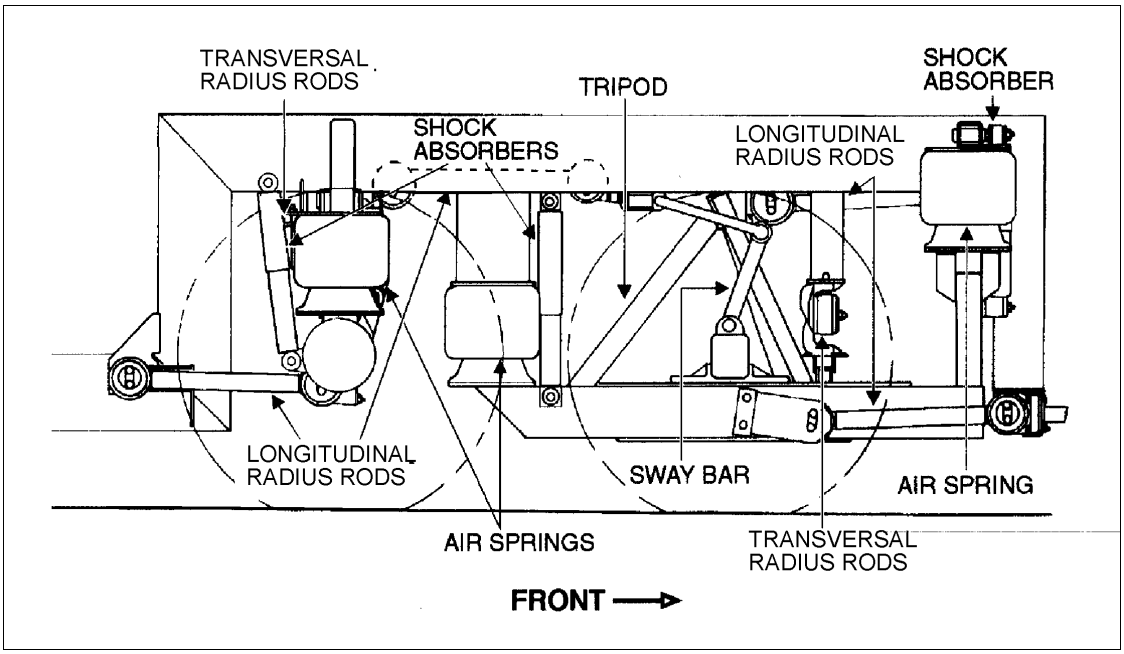

FIGURE 2: REAR SUSPENSION COMPONENTS 160003

2. AIR SPRING

The *"rolling lobe"* type air springs are made from a special compound rubber molded to the proper contour and dimensions. The entire vertical load of the vehicle is supported by these springs. Each of the three axles is provided with air springs that are attached to the subframe and to the axles (Fig. 3).

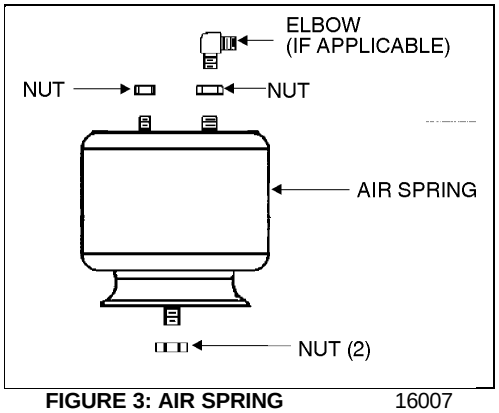

FIGURE 3: AIR SPRING 16007

2.1 Inspection

1. Check operation of bellows.
2. Visually inspect bellows for evidence of cracks, punctures, deterioration, or chafing. Replace the bellows if any damage is evident.
3. With the primary air system at normal operating pressure (95 - 125 psi (655 - 860 kPa)), coat all suspension air line connections and bellows mounting areas with a water and soap solution. Bubbles will indicate an air leak, and none is permissible. Repair or replace defective parts.

Note: *If air spring is removed from vehicle, bellows can be lightly inflated and submerged in water to detect any leakage. If any leakage is detected, replace bellows.*

Warning: *To prevent personal injury, do not apply more than 10 psi (69 kPa) air pressure with the air spring unmounted.*

2.2 Removal

Note: *Suspension air springs (front, drive, and tag axles) can be removed without removing the entire axle assembly.*

1. Safely support vehicle at the recommended body jacking points.

   To gain access to a given air spring, the corresponding wheel can be removed as follows:

   a) Jack vehicle until the tire clears the ground, and place safety supports underneath body.

Caution: *Only the recommended jacking points must be used as outlined in Section 18, "Body".*

   b) Support the axle with a suitable hydraulic floor jack at the recommended jacking point.

   c) Remove wheel.

2. Exhaust compressed air from accessory air tank by opening drain cock under reservoir.
3. Disconnect the height control valve link and pull down the overtravel lever to ensure all air is exhausted from air springs.

Note: *While performing this step, do not change the height control valve overtravel lever adjustment.*

4. Disconnect air line from air spring, remove elbow (if applicable), and cover both the line end and fitting to prevent the entry of foreign matter.
5. Remove the two air springs upper nuts, and then the two lower nuts. Remove air spring.

2.3 Installation

1. Compress air spring as necessary, then aligning studs with their holes, position air spring between both the lower and upper supports. Thread the lower nuts and the small upper nut a few turns.
2. Tighten and torque the lower stud nuts, and then the upper one to 20 - 25 lbf·ft (27 - 34 N·m).
3. Thread the remaining upper nut (large nut) and tighten to 20 - 25 lbf·ft (27 - 34 N·m).
4. Install elbow (if applicable), then connect air line.
5. Connect the height control valve link.
6. Build up air pressure in system.

Note: *To accelerate this operation, air reservoirs can be filled from an exterior air supply connected to the accessory tank fill valve or to the emergency fill valve.*

7. Check operation of bellows, and with the primary air system at normal operating pressure (95 - 125 psi (655 - 860 kPa)), coat the air line connections and air spring mounting areas with a water and soap solution. Bubbles will indicate an air leak, and none is permissible. Repair or replace defective parts.

8. Remove the hydraulic floor jack from under the axle, then lower vehicle to ground.

3. SHOCK ABSORBER

Double-action, telescoping-type shock absobers ensure a smooth ride and enhance vehicle sta-bility on the road. All shock absorbers are eye-type mountings. The front and tag axles are each provided with two shock absorbers while the drive axle is provided with four of them.

Shock absorbers are non-adjustable and non-repairable. Maintenance requirements involve replacement of the rubber mounting bushings, and tightening of all shock absorber pins at the proper torque (350 - 400 lbf·ft (475 - 545 N·m)) when shock absorber replacement occurs. If a shock absorber becomes inoperative, complete unit must be replaced.

Caution: *When a shock absorber is found defective, always replace with a new set on affected axle, except if there has been a recent replacement of one unit. The following method will help in determining if both shock absorbers on the same axle have to be replaced.*

3.1 Inspection

Loosen lower mounting of both shocks, then carefully attempt to raise and lower the bottom portion of each shock. Note the rate of effort for distance of travel. Replace both shocks if a definite differential rate is found.

The shock must be bench checked in an upright, vertical position. If checked in any other position, air will enter the cylinder tube and make the shock absorber appear defective.

Proceed as follows to check shock absorbers:

1. With the shock absorber in a vertical pos tion (top end up), clamp the bottom mount in a vise.

Caution: *Do not clamp the reservoir tube or the dust tube.*

2. Rotate the dust tube. Notice any binding condition (may be compared with new unit). Binding condition indicates a scored rod. Units with scored rods should be replaced.
3. Fully extend shocks and check for leaks in the seal cover area. Shock fluid is a very thin hydraulic fluid that has a characteristic odor and dark brown tint. A slight trace of shock fluid around the seal cover area is not a cause for replacement. The shock seal is designed to permit a very slight see-page to lubricate the rod. Units which leak should be replaced.
4. Visually check shock for dents that could cause the shock to bind. Also, check for a bent rod.
5. Extend and collapse shock to determine that it has control (resistance) in both rebound and compression.
6. Visually inspect the shock mountings and vehicle mountings for:
   a) Broken mounts;
   b) Extreme bushing wear;
   c) Shifted bushing or sleeve;
   d) Deep cracks in bushing material (shallow surface cracks are normal);
   e) Loose shock absorber pins;
   f) Presence of convex washers, and position of them according to the rubber bushing.

3.2 Removal

1. Remove nuts and washers from shock absorbers on upper and lower mounting pins, taking care to identify the inner and outer washers to ease reinstallation. Refer to figure 4 for details.

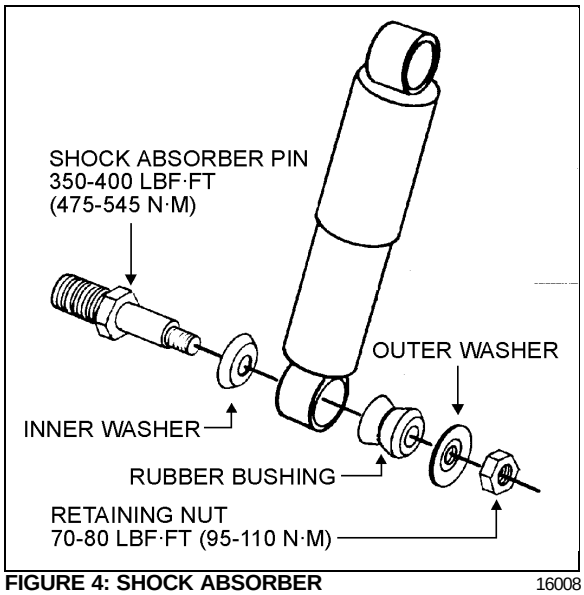

FIGURE 4: SHOCK ABSORBER 16008

2. Remove the shock absorber assembly from pins.

3. Remove the two inner bushings from the shock absorber, and discard them.

3.3 Installation

1. Ensure that the shock absorber mounting pins are tight and that the threads are not stripped.
2. Install new rubber mounting bushings on shock absorbers (upper and lower).
3. Place the inner washers (with washer convex side facing the shock absorber rubber bushing) on each shock absorber pin (Fig. 5).

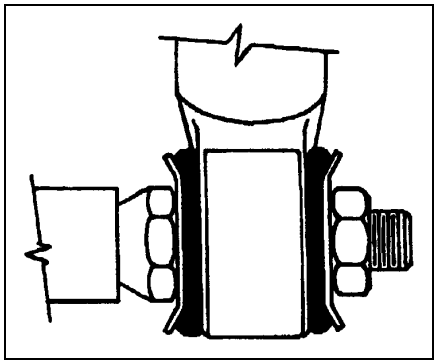

16009

FIGURE 5: TYPICAL SHOCK ABSORBER SETUP

4. Install the shock absorber eyes over the mounting pins, then the outer washers (with washer convex side facing the shock absorber rubber bushing) on each shock extremity.
5. Place the lower and upper mounting pin stud nuts and torque them to 70 - 80 lbf·ft (95 - 110 N·m).

4. RADIUS ROD

Radius rods are used to secure the axles in the proper transversal and longitudinal positions. Five radius rods are provided on the front axle suspension (four longitudinal and one transversal), four on the drive axle suspension (three longitudinal and one transversal) and also four on the tag axle with a layout similar to the drive axle. Refer to figures 1 and 2 for details. These rods transmit both braking and driving forces from the axles to the vehicle body.

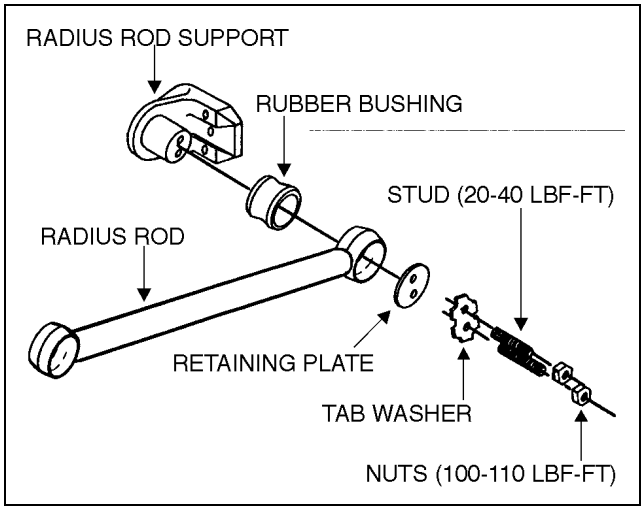

FIGURE 6: TYPICAL RADIUS ROD SETUP 16010

4.1 Inspection

The following instructions apply to all radius rods used on this vehicle:

1. Clean all parts thoroughly.
2. Inspect radius rods for distortion and cracks. We recommend the *"Magnaflux"* process to detect cracks in the radius rod. Any damaged part should be replaced with a new one.

Note: *New bushings should be used when rods are replaced.*

3. The radius rod bushings should be checked periodically for signs of shearing, deterioration, or damage. Any defective part should be replaced with a new one.

4.2 Removal

1. Flatten the tab washer which secures the two retaining nuts (or bolts), then unscrew the nuts (or bolts) at each extremity of the radius rod (Fig. 6).
2. Remove the retaining plates and radius rod ends from anchor pins, then remove the radius rod.

4.3 Bushing Removal

1. Safely support the radius rod as shown in figure 7.

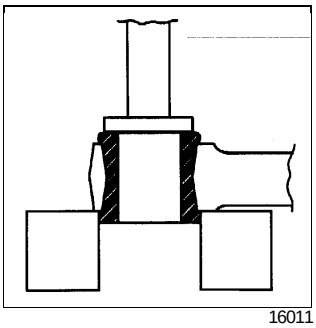

16011

FIGURE 7: RADIUS ROD BUSHING REMOVAL

2. Place a flat steel disc, slightly smaller than the outside diameter of the bushing (Fig. 7).
3. Using an arbor press or a suitable driving tool, press or drive the old bushing out of the rod and discard the bushing.

4.4 Bushing Installation

1. Lightly Spray the inner and outer surfaces of radius rod bushing with water.

Caution: *No lubricant whatsoever is to be used on the rubber bushing.*

2. Safely support the radius rod, and place new bushing on top of the radius rod end.
3. Place a block of wood on top of bushing and press on it manually.
4. If necessary, use an arbor press or a suitable driving tool. Press or drive the bushing into the radius rod end until it extends equally on both sides of the rod (Fig. 8).
5. It is also possible to proceed differently. Place radius rod bushing on a plane surface. Spray a light coat of water on the inner and outer surfaces of radius rod bushing.
6. Take radius rod, align the bushing. Tap radius rod on bushing until latter is positioned correctly.

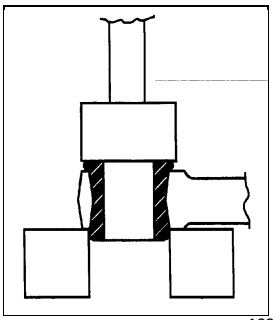

16012

FIGURE 8: RADIUS ROD BUSHING INSTALLATION

4.5 Installation

1. Lightly Spray the anchor pin with water. Place the radius rod end over the anchor pin (Fig. 9).

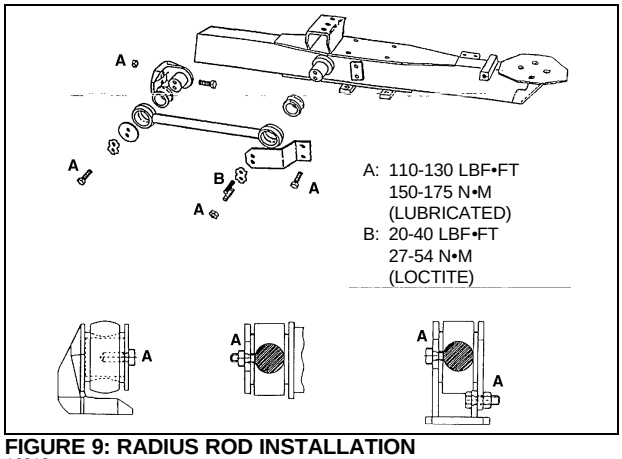

FIGURE 9: RADIUS ROD INSTALLATION
16013

2. Position the retaining plate. Install the tab washer and nuts (or bolts).

Caution: *Always use new tab washers at installation.*

3. Tighten the nuts (or bolts) lightly, and repeat at the other end.
4. Refer to paragraph "7. SUSPENSION HEIGHT ADJUSTMENT" later in this section, and set the vehicle to normal ride height.
5. With the vehicle at normal ride height, apply oil on threads and tighten all radius rod anchor pin nuts or bolts to 110 - 130 lbf·ft (150 - 175 N·m).

Caution: *It is extremely important upon reconnection of the rods that the proper clearance height between the axle and body is maintained. Otherwise, the rubber bushings in radius rod ends will become preloaded, thus reducing the life of these parts.*

5. SWAY BAR

A sway bar is provided on the front and drive axles to increase vehicle stability. It controls lateral motion (swaying movement) of vehicle (Fig. 10).

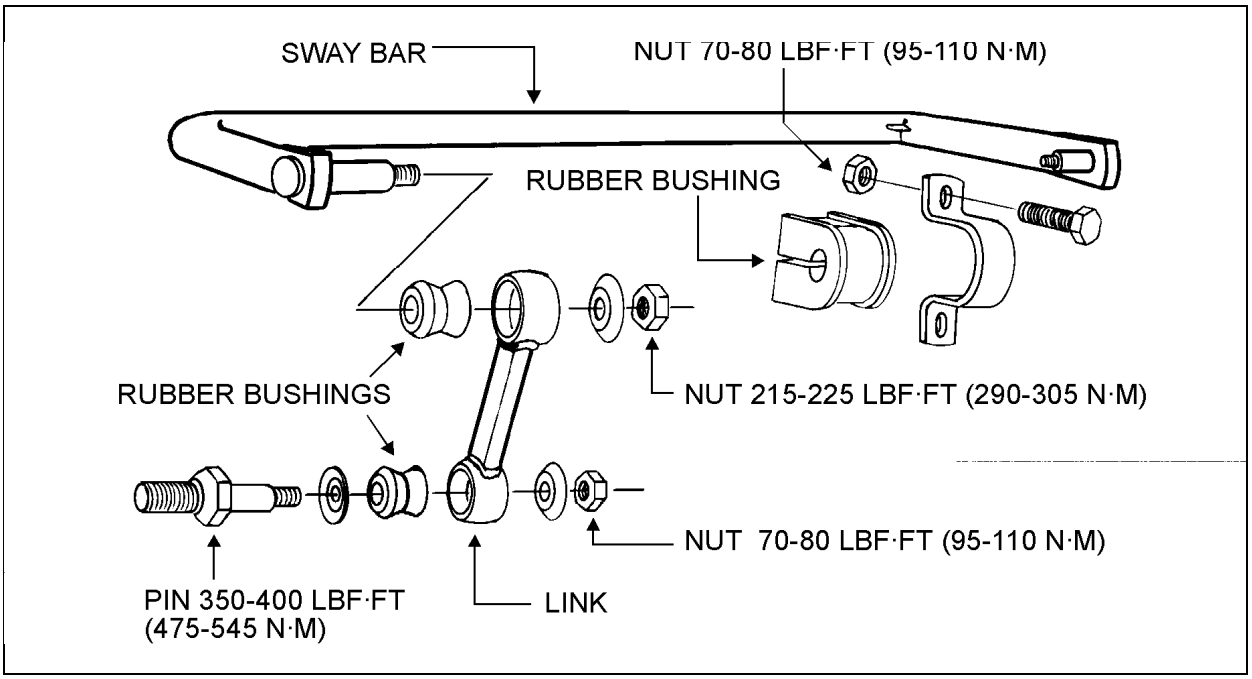

FIGURE 10: SWAY BAR 16014

5.1 Removal

1. Disconnect the two links from sway bar.
2. Safely support the sway bar. Unbolt the four bushing collars from subframe.
3. Remove sway bar.

Note: *Sway bar bushings are slitted to ease their removal.*

5.2 Installation

1. Loosely install the sway bar.
2. Tighten the eight bushing collar nuts to 70 - 80 lbf•ft (95 - 110 N•m).
3. Tighten sway bar link upper nuts to 215 - 225 lbf•ft (290 - 305 N•m) and lower nuts to 70 - 80 lbf•ft (95 - 110 N•m).

6. SUSPENSION AIR SYSTEM

6.1 Description

The suspension air system has its own air reservoir (accessory tank) which is located in the reclining bumper compartment. Pressurized air from the main tank (wet tank) flows through a pressure protection valve (PR-2) and an air filter which are both located in front service compartment, and then flows to the accessory air tank.

The pressure protection valve (PR-2) is moun-ted to the supply port of the air filter. This valve controls the pressure at which compressed air would be delivered to the accessory air tank. The valve remains closed until a preset pressure is reached (approximately 70 psi (485 kPa)). It then opens and passes air out the delivery port.

The main use for this valve is to protect the main air system by ensuring at all times a sufficient air pressure in the main system (i.e. air delivered to the accessories will be shut off in case of a decrease in pressure). Maintenance and repair information on the pressure protection valve is supplied in the applicable booklet, annexed to Section 12, *"Brakes and Air System"* under reference number SD-03-55.

Warning: *Depressurize parts prior to remove them.*

6.2 Inspection

The following inspection should be performed at established service inspection periods. Performing these procedures will allow substandard performance to be discovered before the condition becomes bad enough to cause operator complaints and failure on a run.

1. Visually inspect the suspension air lines for evidence of chafing on metal parts or other damage.
2. Visually inspect the air springs for cracks, abrasion or other damage.
3. Replace any parts found to be damaged.

6.3 Air Line Test

With the main air system at normal operating pressure, coat all suspension air line connections and air spring mountings with a solution of soap and water. Air leakage will produce soap bubbles. Any leak found must be corrected as no air leakage is permissible.

6.4 Air Tank Maintenance

Refer to Section 12, *"Brakes and Air System"* under heading *"*2.2 MAINTENANCE*"* for complete instructions on air tank maintenance.

7. SUSPENSION HEIGHT ADJUSTMENT

The flow of pressurized air from the accessory air tank to the air springs is controlled by three height control valves. These valves are mounted to the subframe and connected to the axles through an arm and link connection. This connection allows the valves to apportion air pressure in the springs to the vehicle load, maintaining normal ride height.

Immediate response height control valves increase or decrease the air pressure in the suspension system as required. One height control valve is located at center of front axle, and regulates air to front axle air springs in order to maintain the vehicle at the required height. Two are located at the drive axle, one on each inner side of rear wheelhouse. Refer to figure 11.

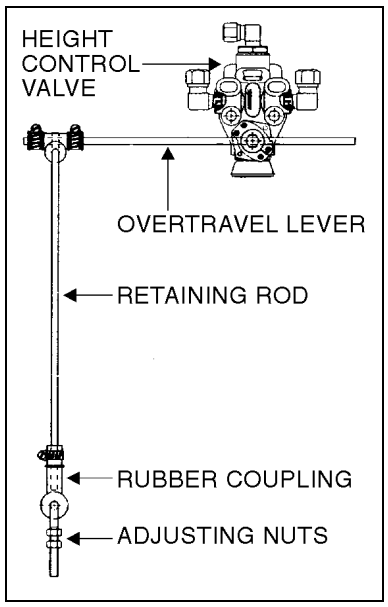

FIGURE 11: HEIGHT CONTROL VALVE **16015**

The appropriate vehicle body height is obtained by measuring the clearance of the air springs installed on the front and drive axles. The clearance should be 12 ± 0.25" (305 ± 6 mm) for the air springs installed on the front axle and 11.5 ± 0.25" (292 ± 6 mm) for those installed on the drive axle. Refer to figure 12 to identify the correct location where the measure has to be taken. At this point, it should not be necessary to make an adjustment under normal service conditions. However, if an adjustment is required, change the position of the overtravel lever in relation to the overtravel control body. The lever should be moved up to raise the height of vehicle, and down to lower it. Check that main air pressure is at normal operating pressure and raise the vehicle to the speci**fied height.**

Caution: *Always adjust on "fill cycle". If it is necessary to lower vehicle height, release sufficient air to be well below height, and adjust to height or fill cycle.*

To adjust suspension height, proceed as follows:

1. With the vehicle at normal operating air pressure, check the air spring clearance as illustrated in figure 13. This clearance should be 12 ± 0.25" (305±6 mm) for the front axle air springs and 11.5 ± 0.25" (292 ± 6 mm) for those on the drive axle.

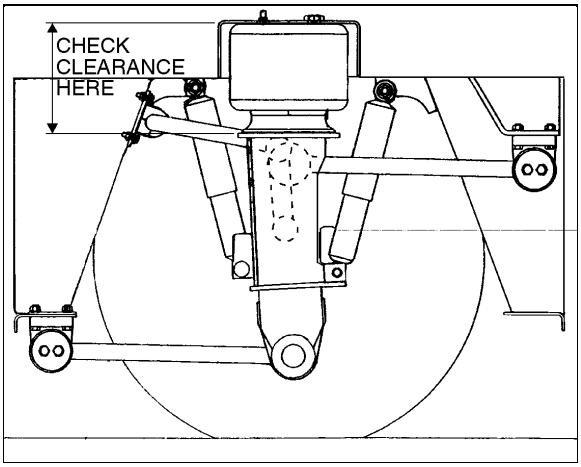

FIGURE 12: TYPICAL AIR SPRING CLEARANCE 16002

Note: *The measure should be taken from under the upper air spring support on subframe to top of the lower air spring support on axle (refer to fig. 12 for more details). If adjustment is required, begin with the drive axle.*

2. Loosen the two adjusting nuts on the connecting rod of height control valve to raise or lower the overtravel lever until the desired clearance is reached.
3. If there is not enough play on adjusting nuts, it is possible to make further adjustments by loosening the clamp on the rubber coupling and bringing it up or down.

Note: *Allow suspension to stabilize before taking reading.*

4. When the desired height is obtained, tighten adjusting nuts and clamp.

8. HEIGHT CONTROL VALVE

8.1 Operation

The height control valves automatically add air to, or release air from air springs to maintain constant suspension height regardless of load, or load distribution. Each valve adjusts independently according to the following conditions:

8.1.1 Loading Position

As the load increases and lowers the vehicle body, the overtravel lever commands the height control valve to add air to air springs.

8.1.2 Neutral Position

When vehicle body reaches the normal ride height, the height control valve overtravel lever reaches the "neutral" position and keeps both the supply and exhaust ports closed to ensure normal ride height is maintained. This condition remains static until the vehicle load is altered.

8.1.3 Unloading Position

As the load decreases and raises the vehicle body, the overtravel lever commands the height control valve to release air from air springs.

8.2 Maintenance

The height control valve requires no periodic maintenance. Height control valve linkage operates on rubber bushings and no lubrication should be attempted at this point.

8.2.1 Removal and Installation

Before disconnecting any height control valve air lines, securely support the vehicle by its jacking points on the body. Refer to paragraph *"*16. VEHICLE JACKING POINTS*"* in Section 18, *"Body"*.

1. Exhaust air from air system by opening the drain cock on accessory air reservoir. Remove height control valve as follows.
2. Disconnect overtravel lever from link and pull down lever to exhaust remaining air from air springs.
3. Disconnect air supply and delivery lines from the height control valve. Cover ends of the lines with tape.
4. Remove the two nuts retaining the height control valve to the mounting bracket, then remove valve assembly.

Reverse removal procedure to replace height control valve. After installation, check for leakage using a soap and water solution.

8.2.2 Air Leakage Test

Note: *The following procedure applies when valve assembly has been removed from vehicle.*

1. Clean the exterior of valve assembly.
2. Connect air pressure line to air inlet port, then allow air pressure build-up 70-100 psi (480-690 kPa).
3. Dip the valve assembly in a container of water, and watch for air bubbles when the overtravel lever is in the center position. No air should escape from any point of the valve assembly.
4. If bubbles appear from the air spring port, this is an indication that the air inlet valve assembly is defective and must be replaced.
5. Remove air pressure line from air inlet fitting and connect it to the air spring port. If bubbles appear at the air inlet check valve port, this is an indication that check valve unit is defective and must be replaced.
6. If bubbles appear at the exhaust port, this is an indication that the exhaust valve assembly is defective and must be replaced.
7. If bubbles appear around edge of valve cover plate, the cover plate gasket must be replaced.
8. If no leaks are found, remove valve assembly from water, then with air pressure still connected to the air spring port, actuate overtravel lever to remove any excess water which may have entered exhaust valve chamber. Remove air line, connect it to the air inlet port, and repeat operation to remove water from the air inlet valve chamber.

9. FRONT KNEELING (W/ FRONT HIGH-BUOY) SYSTEM

The kneeling system is used to lower front of vehicle. This allows passengers to board the vehicle with greater ease. The kneeling action is achieved by exhausting air from the front air springs (bellows). This system bypasses the height control valve to provide a fast up and down movement of the front suspension. Only seven seconds are required to lower vehicle from normal level to the lower position, and approximately the same time to raise the vehicle from lower position to normal level. The quick response is achieved by an auxiliary air tank installed beside the secondary air reservoir (for exact position, refer to Section 12, *"Brake and Air System"*). This tank provides sufficient air supply to the kneeling system for some successive operations.

The system is provided with two safety features; first, a speed switch will enable the kneeling system to work only under 5 mph (8 km/h). Secondly, the parking brake is automatically applied, and a limit switch will keep it applied as long as the vehicle has not returned to a certain height where the driver will be able to manually remove the parking brake.

The purpose of the high-buoy function in this system is to raise the front end of the vehicle to allow passengers to board the vehicle with greater ease. It is also used to allow an extra ground clearance for particular situations. In normal conditions, the height control valve is in operation and only the high-buoy can be operated.

9.1 Principle of Operation

Refer to the air system schematic diagram annexed at the end of Section 12, "*Brake and Air System*".

DOWN (FRONT KNEELING):

Both the bellows control and bellows exhaust solenoid valves are energized, so the air control valves release air from front air springs. The height control valve is bypassed to ensure no air is forwarded to air springs while lowering the front suspension.

UP (FRONT HIGH-BUOY):

Only the bellows control solenoid valve is energized, so the air coming from the kneeling air tank is routed through air control valves, and up to front air springs. The height control valve is bypassed until the kneeling proximity switch signals the kneeling module to cut off the bellows control solenoid valve, about 1" (25 mm) below normal ride height. The final height adjustment is achieved by the height control valve.

9.2 Maintenance

Since the kneeling action is issued from both the air system and electrical system, refer to

Section: 12, *"Brake and Air System"* and Section 06, *"Electrical System"*.

For diagnosis and understanding of the system, refer to wiring diagrams, and to the appropriate air system schematic diagram annexed to Section 12, *"Brake and Air System"*.

9.3 Bellows Control and Bellows Exhaust Solenoid Valves

9.3.1 Removal and Installation

1. On the rear side of steering compartment, locate both the bellows control and bellows exhaust solenoid valves.
2. Identify hoses and wires to ease reinstallation. Disconnect solenoid wires and the three flexible black hoses from solenoid valves.
3. Unscrew and remove the control solenoid valve and exhaust solenoid valve assembly. Place on a clean working place.

Reverse removal procedure to reinstall.

Caution: *Any cable tie that has been cut during removal procedure should be replaced with a new one.*

10. REAR HIGH-BUOY SYSTEM

The purpose of the rear high-buoy system is the raise vehicle body about 4" (100 mm) in order to increase ground clearance to board a ferryboat, to avoid a curb, etc.. This system can be put into service during normal vehicle operation.

10.1 Principles of Operation

The rear high-buoy system is added over the front kneeling (with front high-buoy). The front end uses the same valves as the front kneeling (with front high-buoy). A solenoid valve is added to send air to the double shuttle valves for the rear end. It uses the same dash switch as the kneeling (with front high-buoy).

UP:

The air coming from the control valve, flows through double shuttle valves, to supply air springs. The double shuttle valves prevent height control valves from releasing air from air springs.

DOWN:

The control valve, on the dashboard, cuts off air supply, so the double shuttle valves allow height control valves to accomplish their function. Height control valves release air from air springs until suspension

10.2 Maintenance

Refer to the air system schematic diagram " OPT. FRONT KNEELING WITH REAR HIGH-BUOY COMBINATION" annexed at the end of this Section.

10.3 High-Buoy - Pressure Regulating Valve

The regulating valve is located on ceiling of the spare wheel and tire compartment and is accessible through the reclining bumper. This valve should be adjusted to 90 psi (621 kPa).

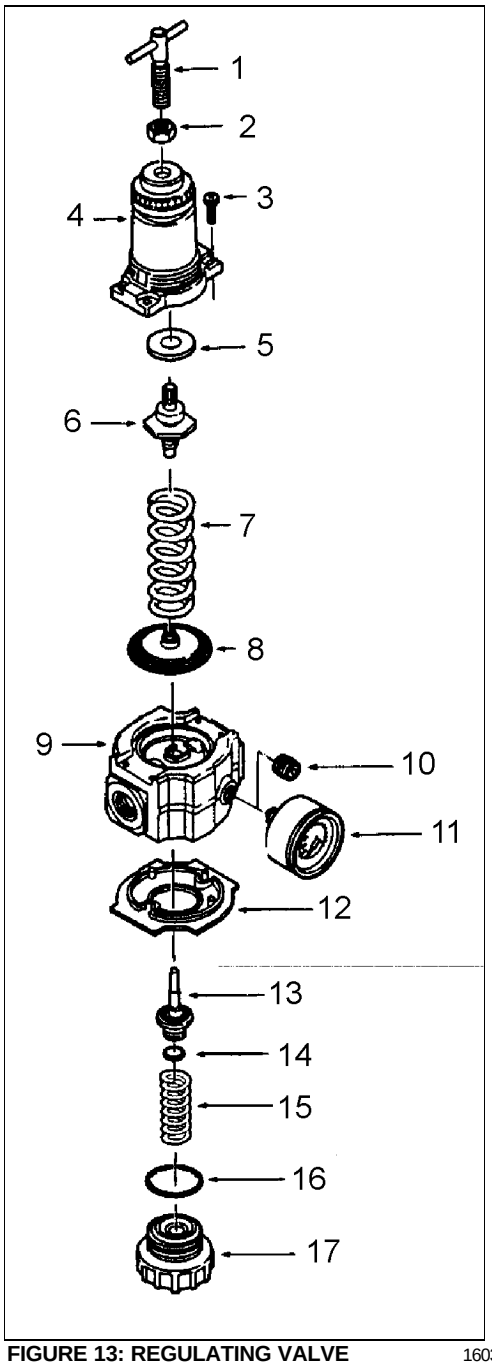

FIGURE 13: REGULATING VALVE 16035

10.3.1 Adjustment

1. Before turning on system air pressure, turn regulator adjustment counterclockwise until all load is removed from the regulating spring.
2. Turn on system pressure.
3. Turn regulator adjustment clockwise until the desired outlet pressure is reached.
4. To avoid minor readjustment after making a change in pressure setting, always approach the desired pressure from a lower pressure. When reducing from a higher to a lower setting, first reduce the pressure at a lower pressure, then increase it to the desired level of pressure.
5. Tighten jam nut (2, Fig. 13) to lock pressure setting.

10.3.2 Disassembly

1. Shut off inlet pressure and reduce pressure in inlet and outlet lines to zero. Turn regulator adjustment (1, Fig. 13) counterclockwise until all load is removed from regulating spring. Regulator can be disassembled without removal from air line.
2. Disassemble regulator in accordance with the item numbers on the exploded view.

10.3.3 Cleaning

1. Clean parts with warm water and soap. Dry parts and blow out internal passages in body using clean, dry compressed air.
2. Inspect parts. Replace those found to be damaged.

10.3.4 Reassembly

1. Lubricate o-ring (14 and 16, Fig. 13), valve stem (13, Fig. 13), tip of adjusting screw (1, Fig. 13), and the outer circumference and both sides of the thrust washer (9, Fig. 13) with a light coat of good quality o-ring grease.
2. Assemble the regulator as shown on the exploded view.

Torque Table	
Item	**Torque in Inch-Pound (N•m)**
3 (Screw)	25-35 (2.8-3.9)
17 (Bottom plug)	20-25 (2.3-2.8)

11. REAR LOW-BUOY SYSTEM

The purpose of the rear low-buoy system is to lower the whole suspension about 4" (100 mm) in order to reduce the overall height for low clearances. This system can be put into service during normal vehicle operation.

11.1 Principles of Operation

On H3-41 and H3-45, the rear low-buoy is added over the front kneeling (w/ Front High-Buoy). The control valve on the right console panel sends an electric signal from its pressure switch to control the front suspension as at kneeling. It also removes air from a relay valve that exhausts air supply to all leveling valves and the quick release in the rear section. Air from the rear suspension can then be depleted through the check valve-quick release assembly.

DOWN:

The control valve, on the dashboard, cuts off air supply, so air is released from air springs. A relay valve prevents height control valves from supplying air springs.

UP:

The control valve, on the dashboard, supplies air to close the passage between both the delivery and supply ports. A relay valve opens and provides air springs until the suspension reaches the normal ride height.

11.2 Maintenance

Refer to the air system schematic diagram " OPT. FRONT KNEELING WITH REAR LOW-BUOY COMBINATION" annexed at the end of this Section.

12. "LEVEL-LOW" LEVELING SYSTEM

The purpose of the *"level-low"* leveling system is to adjust suspension in three separate points (front, rear right and rear left) in order to level vehicle body. This system can be put into service when the ignition key is turned to the *"ON"* position, and must be used only when the parking brake is applied.

The *"level-low"* warning light on the dashboard indicates that the selector knob is not in the *"DRIVE"* position.

12.1 Principles of Operation

DOWN:

The (front/rear right/rear left) control solenoid valve supplies air to the (front/rear right/rear left) five-way three-position air control valve, which bypasses the (front/rear right/rear left) height control valve, and opens a passage to allow the air control and exhaust valve to release air from (front/rear right/rear left) air springs.

UP:

The (front/rear right/rear left) control solenoid valve supplies air to the (front/rear right/rear left) five-way three-position air control valve, which bypasses the (front/rear right/rear left) height control valve, and opens a passage to allow the air control and exhaust valve to supply air to (front/rear right/rear left) air springs.

DRIVE:

When the ignition key is turned to the *"ON"* position with selector knob in the *"DRIVE"* position, the drive control solenoid valve supplies air to all five-way three-position air control valves, each one opening a passage to allow height control valves to accomplish their function.

When the ignition key is turned to the *"OFF"* position and selector knob to the *"DRIVE"* position, the air is entrapped between air springs and five-way three-position air control valves to ensure the adjusted level will be kept.

Warning: *Never move vehicle with selector knob in any other position than the "DRIVE" position.*

12.2 Maintenance

Since the kneeling action is issued from both the air system and electrical system, refer to Section: 12, *"Brake and Air System"* and Section 06, *"Electrical System"*.

For diagnosis and understanding of the system, refer to wiring diagrams, and to the appropriate air system schematic diagram annexed to Section 12, *"Brake and Air System"*.

13. TROUBLESHOOTING

Condition	Cause	Correction
Bellows deflate over time	1. Defective check valve assembly. 2. Defective exhaust valve assembly. 3. Leak in air line and/or bellows. 4. Defective valve cover, rubber O- rings or gasket.	1. Replace check valve assembly. 2. Replace exhaust valve assembly. 3. Replace air line or bellows. 4. Replace valve cover, O-rings or gasket.
Bellows raise to full height and fail to exhaust air pressure	1. A clogged exhaust screen in height control valve assembly. 2. A combination clogged exhaust. 3. screen and defective air inlet valve assembly.	1. Remove and clean screen. 2. Clean exhaust screen and replace air inlet valve assembly.
Erratic valve action	1. Dirt or foreign matter in the air valve lever chamber. 2. Defectives valves.	1. Remove valve cover and blow out dirt. Install cover using new gasket 2. Overhaul height control valve assembly
Vehicle body fails to level to satisfactory ride height	1. Improper height control valve over travel lever adjustment	1. Adjust lever as directed

14. PARTS SPECIFICATIONS

Front and tag axle air springs
Make .....Goodyear Tire and Rubber
Model ..... May-West
Type..... 1100
Nominal diameter..... 12" (304 mm)
Supplier number.....1R12-319
Prévost number..... 630125

Drive axle air springs
Make .....Goodyear Tire and Rubber
Model .....Roll-over volume can
Type..... 1100
Nominal diameter..... 11" (279 mm)
Supplier number.....1R11-089
Prévost number..... 630105

Front axle shock absorbers
Make .....Gabriel
Color .....White
Collapsed length15.47±0.125" (39,29±0,32 cm)
Extended length.. 24.5±0.125" (33,32±0,32 cm)
Supplier number..... 680422
Prévost number..... 630134

Drive and tag axle shock absorbers
Make.....Monroe
Type .....Gas Magnum
Collapsed length.....15.38" (39,05 cm)
Extended length .....23.63" (60,01 cm)
Supplier number 650407
Prévost number 630127

Height control valve
Make.....Neway
Quantity used 3
Supplier number 905-54-241
Prévost number 630120

Bellows control and exhaust solenoid valve assembly
Make.....Norgren
Solenoid valve manifold
Supplier number D0043B
Prévost number 641130
Coil
Voltage ..... 24 V DC
Current draw..... .29 amperes
Supplier number 54932-27
Prévost number 641144

Valve (3 ways, 2 positions)
Type..... N/C
Supplier number..... 411-C-456235W
Prévost number..... 641357
Type..... N/O
Supplier number..... 411-D -456236X
Prévost number..... 641356

Radius rod bushing
Make ..... Prévost
Prévost number..... 630021

Sway bar bushing
Make.....Prévost
Prévost number 130953

Shock absorber and sway bar link bushings
Make.....Monroe
Supplier number 45380
Prévost number 630062

Air Regulator
Make.....Norgren
Recommended pressure setting90 psi (621 kPa)
Supplier number R74G-4AT-RMN
Prévost number 641352

15. TORQUE SPECIFICATIONS

1- Shock absorber pin..... 350-400 lbf·ft (475-545 N·m)

2- Shock absorber pin nut..... 70-80 lbf·ft (95-110 N·m)

3- Radius rod stud ..... 20-40 lbf·ft (27-54 N·m)

4- Radius rod retaining nut or bolt .....110-130 lbf·ft lubricated (150-175 N·m lubricated)

5- Radius rod support nut .....110-130 lbf·ft lubricated (150-175 N·m lubricated)

6- Axle attachment nut..... 425-475 lbf·ft (580-645 N·m)

7- Air spring stud nut..... 20-25 lbf·ft (27-34 N·m)

8- Sway bar link pin stud..... 350-400 lbf·ft (475-545 N·m)

9- Sway bar link lower nut..... 70-80 lbf·ft (95-110 N·m)

10- Sway bar link upper nut .....215-225 lbf•ft (290-305 N•m)

11- Sway bar bushing collar bolt..... 70-80 lbf·ft (95-110 N·m)

Note: *During assembly, use "Loctite 242" (Prévost # 680038) with item 1, 3 and 8. After assembly, apply "anti-seize compound" (Prévost # 680064) on all threads nuts.*

SECTION 18: BODY

CONTENTS

1. COMPARTMENT DOORS....18-6
   1.1 H3-41....18-6
   1.2 H3-45....18-7
2. STRUCTURE....18-7
   2.1 Description....18-7
   2.2 Welding....18-7
3. EXTERIOR MAINTENANCE....18-8
   3.1 Corrosion Prevention....18-8
4. FIBERGLASS REPAIR....18-8
   4.1 Repair with Fiberglass Cloth....18-9
   4.2 Repair with Fiberglass Paste....18-9
   4.3 Typical Fiberglass Repair Procedure....18-10
5. PAINTING....18-11
   5.1 Safety....18-11
   5.2 Surface Preparation....18-11
      5.2.1 Aluminum Surface....18-11
      5.2.2 Fiberglass Surface....18-11
      5.2.3 Washing....18-11
   5.3 Primer Application....18-11
      5.3.1 Aluminum Surface....18-11
      5.3.2 Fiberglass Surface....18-11
   5.4 Painting....18-11
      5.4.1 PPG Paint Application....18-11
      5.4.2 PPG Clear Application....18-12
6. COACH FRONT AND REAR BUMPERS....18-12
   6.1 Repair of Superficial Damage....18-12
   6.2 Repair of Substantial Damage....18-13
   6.3 Refinishing procedure....18-13
      6.3.1 Surface Preparation....18-14
      6.3.2 Prime Coat....18-14
      6.3.3 Color Coat....18-14
   6.4 Front Bumper Removal and Installation....18-14
   6.5 Rear Bumper Removal and Installation....18-15
7. COACH ENTRANCE DOOR....18-15
   7.1 Description....18-15
      7.1.1 Operation....18-16
      7.1.2 Emergency Exit Valves....18-16
      7.1.3 Without air and With or Without Electricity....18-16
      7.1.4 With Air and Without Electricity....18-16
   7.2 Adjustment and Maintenance....18-17

7.2.1 Door Speeds Cycles Adjustments 18-17
7.2.2 Horizontal and Vertical Adjustments 18-19
7.2.3 Depth Adjustment 18-19
7.2.4 Rod End With Bearing Adjustment 18-20
7.3 Lubrication 18-20
7.4 Specifications 18-20
8. ENTRANCE DOOR (V.I.P.) 18-23
8.1 Description 18-23
8.1.1 Inside Operation 18-23
8.1.2 Outside Operation 18-23
8.1.3 Keyless Entry System 18-23
8.2 Door Adjustments 18-23
8.3 Lubrication 18-23
9. ACCESS DOORS 18-25
9.1 Maintenance and Adjustment 18-25
10. BAGGAGE COMPARTMENT DOORS 18-26
10.1 Adjustment 18-27
11. ENGINE COMPARTMENT DOOR 18-29
12. RADIATOR DOOR 18-30
12.1 Door / Hinge 18-30
12.2 Latch Mechanism 18-30
13. CONDENSER DOOR 18-31
13.1 Door / Hinge 18-31
13.2 Latch Mechanism 18-31
14. FUEL FILLER DOOR 18-32
14.1 Door / Hinge 18-32
14.2 Latch Mechanism 18-32
15. FRONT SERVICE COMPARTMENT 18-33
15.1 Door / Hinge 18-33
15.2 Latch Mechanism 18-34
16. ENGINE COMPARTMENT REAR R.H. SIDE DOOR 18-35
16.1 Door / Hinge 18-35
16.2 Latch Mechanism 18-36
17. EVAPORATOR DOOR 18-37
17.1 Door / Hinge 18-37
17.2 Latch Mechanism 18-37
18. MAIN POWER COMPARTMENT AND REAR ELECTRICAL COMPARTMENT 18-38
18.1 Door / Hinge 18-38
18.2 Latch Mechanism 18-38
19. FRONT ELECTRICAL COMPARTMENT 18-39
19.1 Door / Hinge 18-39
19.2 Latch Mechanism 18-39
20. EXTERNAL REAR VIEW MIRRORS (RAMCO) 18-40
20.1 Adjustment 18-40
20.2 Disassembly 18-40
20.3 Assembly 18-40
20.4 Replacement of Mirror Glass 18-40

20.5 Heated / Remote Controlled External Rear View Mirrors....18-40
20.5.1 L.H. & R.H. Outside Mirror Control mirrors....18-41
20.5.2 Disassembly....18-41
20.5.3 Assembly....18-41
20.5.4 Flat Glass....18-41
20.5.5 Convex & Flat Mirror Replacement....18-41
21. EXTERNAL REAR VIEW MIRRORS (SPARTAN)....18-41
21.1 Adjustment....18-42
21.2 Manually Adjusted Mirror....18-42
21.3 Electrically Adjusted Mirror....18-42
21.4 Replacement of Mirror Glass....18-42
22. COACH SIDE WINDOWS....18-42
22.1 Removal and Installation....18-43
22.2 Emergency Exit Window Adjustment....18-44
23. ADHESIVE MOUNTED WINDOWS....18-44
23.1 Replacement....18-44
24. WINDSHIELD....18-46
24.1 Removal....18-46
24.2 Installation....18-46
24.3 Rubber Extrusion and Windshield Installation....18-47
25. ROOF ESCAPE HATCH....18-49
25.1 Maintenance....18-49
25.2 Repair....18-49
25.3 Sealing....18-50
25.4 Removal and Installation....18-50
26. PASSENGER SEATS....18-50
26.1 Rotating Seat....18-50
26.2 Removing Fixed Seats....18-50
27. UPHOLSTERY MAINTENANCE....18-51
27.1 Routine Cleaning....18-51
27.2 Dry Cleaning....18-51
27.3 Cleaning With Covers in Place....18-51
28. VEHICLE JACKING POINTS....18-52
28.1 Body Jacking Points....18-52
28.2 Axle Jacking Points....18-52
28.3 Jacking the Tag Axle....18-52
29. TOWING THE VEHICLE....18-53
29.1 Lifting and Towing....18-53
29.2 Towing Without Lifting....18-53

LIST OF ILLUSTRATIONS

FIG. 1: EXTERIOR COMPARTMENT DOORS (H3-41) 18-6
FIG. 2: EXTERIOR COMPARTMENT DOORS (H3-45) 18-7
FIG. 3: FIBERGLASS REPAIR 18-10
FIG. 4: FIBERGLASS REPAIR 18-10
FIG. 5: FIBERGLASS REPAIR 18-10
FIG. 6: FIBERGLASS REPAIR 18-10
FIG. 7: FIBERGLASS REPAIR 18-10
FIG. 8: REPAIR PAINT 18-12
FIG. 9: FRONT BUMPER 18-14
FIG. 10: FRONT BUMPER 18-14
FIG. 11: TOOL 18-15
FIG. 12: DOOR CYLINDER AND DAMPER 18-17
FIG. 13: COACH ENTRANCE DOOR 18-18
FIG. 14: DAMPER 18-19
FIG. 15: UPPER DOOR HINGE 18-19
FIG. 16: LATCH 18-19
FIG. 17: ENTRANCE DOOR (V.I.P.) 18-24
FIG. 18: REQUIRED DISTANCE BETWEEN EXTERIOR FINISHING PARTS 18-25
FIG. 19: BAGGAGE COMPARTMENT DOOR 18-26
FIG. 20: BAGGAGE COMPARTMENT DOOR 18-27
FIG. 21 BAGGAGE COMPARTMENT DOOR 18-27
FIG. 22: BAGGAGE COMPARTMENT DOOR 18-27
FIG. 23: BAGGAGE COMPARTMENT DOOR 18-28
FIG. 24: BAGGAGE COMPARTMENT DOOR 18-28
FIG. 25: BAGGAGE COMPARTMENT DOOR 18-28
FIG. 26: BAGGAGE COMPARTMENT DOOR 18-28
FIG. 27: BAGGAGE COMPARTMENT DOOR 18-29
FIG. 28: BAGGAGE COMPARTMENT DOOR 18-29
FIG. 29: BAGGAGE COMPARTMENT DOOR 18-29
FIG. 30: ENGINE COMPARTMENT DOOR 18-29
FIG. 31: RADIATOR DOOR 18-30
FIG. 32: A/C CONDENSER COMPARTMENT 18-31
FIG. 33: FULL FILLER DOOR 18-32
FIG. 34: FRONT SERVICE COMPARTMENT 18-33
FIG. 35: FRONT SERVICE COMPARTMENT 18-34
FIG. 36: ENGINE COMPARTMENT REAR R.H. SIDE DOOR 18-35
FIG. 37: ENGINE COMPARTMENT REAR R.H. SIDE DOOR 18-36
FIG. 38: EVAPORATOR DOOR 18-37
FIG. 39: MAIN POWER COMPARTMENT 18-38
FIG. 40: FRONT ELECTRICAL COMPARTMENT 18-39
FIG. 41: RAMCO MIRROR 18-40
FIG. 42: SPARTAN MIRROR 18-41

FIG. 43: MIRRORS ADJUSTMENT SCREWS....18-42
FIG. 44: SPARTAN MIRROR....18-42
FIG. 45: COACH SIDE WINDOWS (H3-41)....18-43
FIG. 46: COACH SIDE WINDOWS (H3-45)....18-43
FIG. 47: EMERGENCY EXIT WINDOW....18-43
FIG. 48: EMERGENCY EXIT WINDOW....18-43
FIG. 49: EMERGENCY EXIT WINDOW....18-43
FIG. 50: ADHESIVE MOUNTED WINDOWS....18-44
FIG. 51: ADHESIVE MOUNTED WINDOWS....18-45
FIG. 52: ADHESIVE MOUNTED WINDOWS....18-45
FIG. 53: ADHESIVE MOUNTED WINDOWS....18-45
FIG. 54: WINDSHIELD....18-46
FIG. 55: WINDSHIELD....18-46
FIG. 56: WINDSHIELD....18-47
FIG. 57: WINDSHIELD....18-47
FIG. 58: WINDSHIELD....18-48
FIG. 59: WINDSHIELD....18-48
FIG. 60: WINDSHIELD....18-48
FIG. 61: ROOF ESCAPE HATCH....18-49
FIG. 62: ROOF ESCAPE HATCH....18-49
FIG. 63: PASSENGER SEAT FRAME HOLDING....18-51
FIG. 64: PASSENGER SEAT FRAME....18-51
FIG. 65: BODY JACKING POINTS....18-52
FIG. 66: FRONT AXLE....18-52
FIG. 67: DRIVE AXLE....18-52
FIG. 68: TAG AXLE....18-52

1. COMPARTMENT DOORS

1. Engine air intake duct
2. Engine compartment R.H. side door
3. Main power compartment
4. Baggage compartment
5. Fuel filler door
6. A/C condenser
7. Entrance door operating switch
8. Entrance door
9. Reclining bumper compartment
10. Front service compartment
11. Front electric compartment
12. Fresh air inlet duct
13. HVAC compartment
14. Fuel filler door
15. Rear electric compartment
16. Radiator
17. Engine compartment rear door
18. Retractable back-up camera (optional)

1.1 H3-41

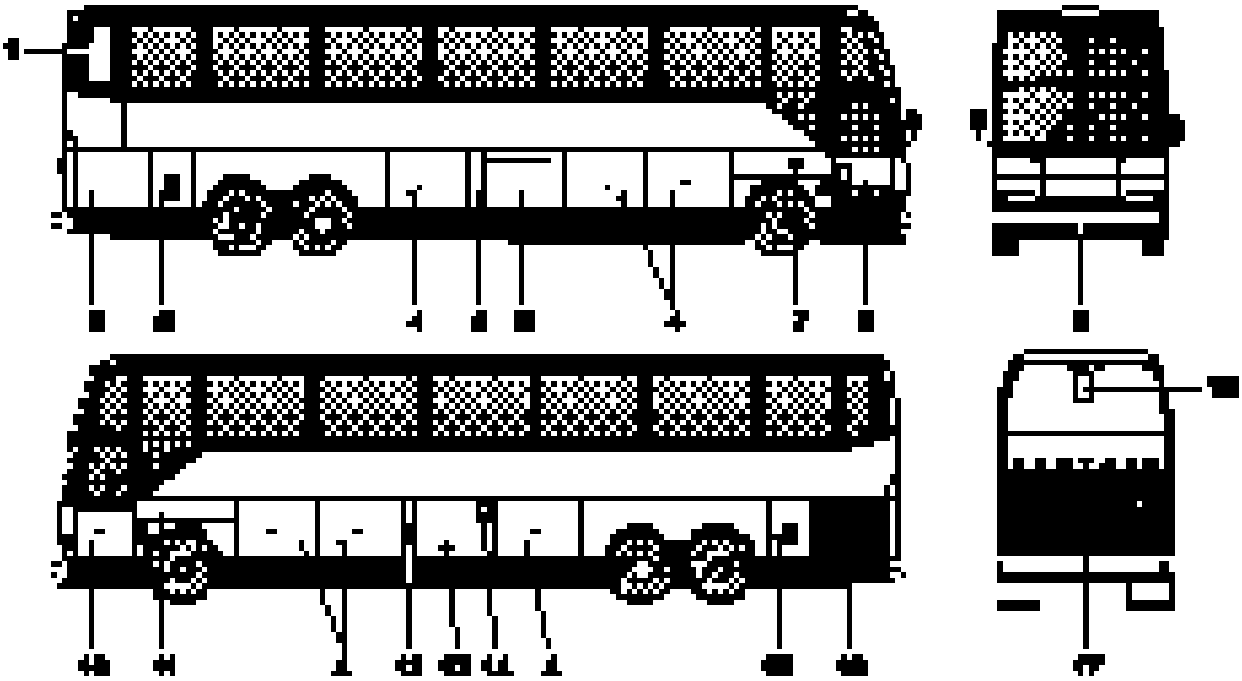

FIGURE 1: EXTERIOR COMPARTMENT DOORS (H3-41) 18055

1.2 H3-45

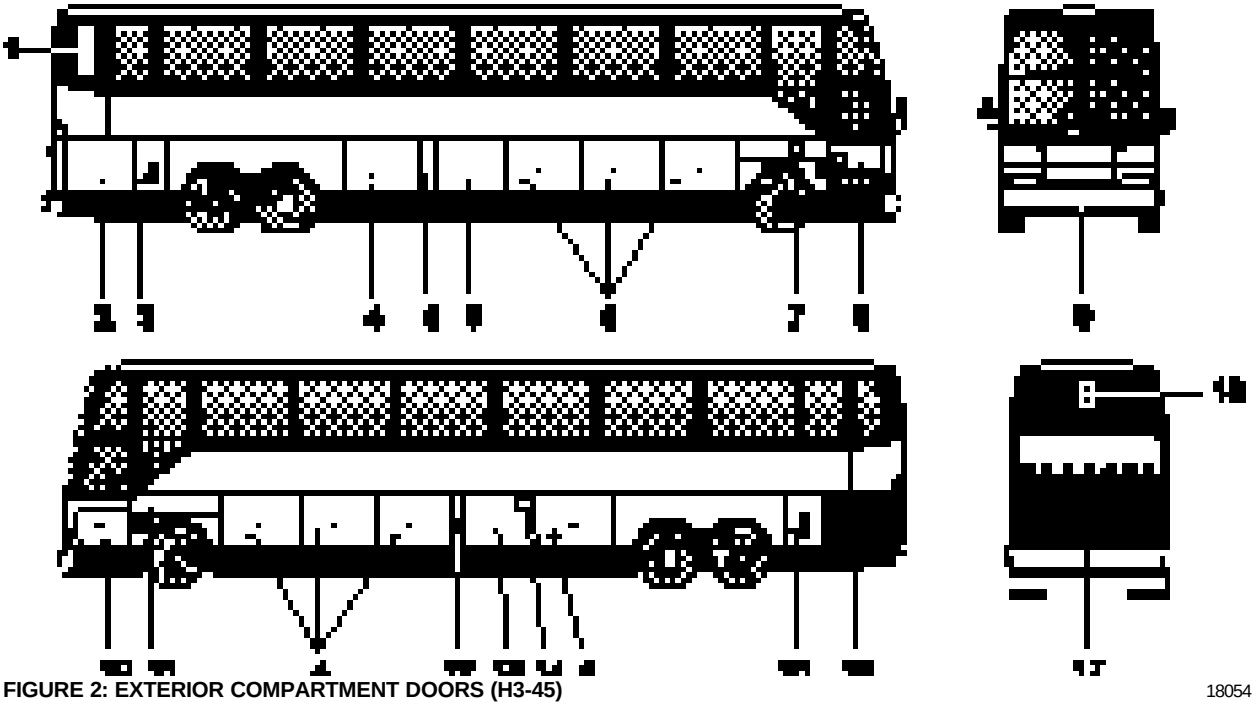

FIGURE 2: EXTERIOR COMPARTMENT DOORS (H3-45) 18054

2. STRUCTURE

2.1 Description

The body of the H3-41 and H3-45 is an integral structure made of 14, 16 and 18 gauge welded and braced high tensile steel and stainless steel members. The roof arches are made with cold rolled, electrically welded (CREW) steel tubes, 1 1/2" x 2" x 14 gauge. The inside is filled with urethane foam and the exterior is primed. The roof is a one-piece aluminum sheet, stretched and riveted all around. The front and rear caps are made of fiber-composite material. The front cap has a carbon-reinforced molded windshield cross-member. The front subframe is made of open sections of high-strength steel-alloy. These open sections permit a better application of primer and undercoating, and does not trap moisture. The rear subframe is made of closed sections of carbon steel sealed at both ends. The floor is made of 2 layers of 1/2" (13 mm) thick plywood separated by a 1/8" (3 mm) insulation to reduce power train and road noises.

2.2 Welding

The following welding rods should be used when making welding repairs to the structure:

Application	Diameter	A.W.S.
Stainless steel to stainless steel or high-strength steel-alloy, light gauge	3/32" (2,4 mm)	No 308
Stainless steel to stainless steel or high-strength steel-alloy, heavy gauge	1/8-5/32" (3,2-4 mm)	No 308
high-strength steel-alloy to high-strength steel-alloy, light gauge	3/32-1/8" (2,4-3,2 mm)	No 6011
high-strength steel-alloy to high-strength steel-alloy, heavy gauge	3/32-5/32" (2,4-4 mm)	No 7018

Since welding is a procedure that may be carried out either as specific instructions from Prévost or by an independent decision of the owner, the following information pertaining to welding should be read before beginning any welding procedure. The prohibitions and requirements outlined below must be followed during welding procedure.

1. Welding must be done only by a qualified and experienced person.
2. Adequate ground contacts and shields must be positioned as required to protect components from damage due to heat, contact by weld splatter, arcing, or other potentially damaging events associated with welding.
3. The following precautions are to be taken to protect the electronic control components. Refer to Section 1, paragraph "8. WELDING PRECAUTIONS" in this manual.
4. Always wear the appropriate safety equipment.
5. Weld in clean and well-ventilated area, and always have an appropriate fire extinguisher within your reach.

3. EXTERIOR MAINTENANCE

Regular washing to remove dust and dirt is recommended. See *"Operator's Manual"* for more details on washing and cleaning your vehicle.

3.1 Corrosion Prevention

Preventive maintenance is a key factor in avoiding corrosion and must be considered as part of the regular service intervals. The entire underside of the vehicle is sprayed with a heavy application of asphalt base undercoating.

The operating environment vehicle is subjected to will largely influence the amount of dirt and corrosion that will accumulate over a given period. Corrosion is one of the most costly factors of part failure and shortened part life. It is, however, an item that can be controlled when it is conscientiously looked for and the proper steps are taken in a timely manner.

Certain areas of the coach are more vulnerable to corrosion than others, and it is these areas that should be addressed. For example, the rear baggage compartment bulkhead in the rear wheelhousing area contains many key components and should be examined regularly for corrosion. Other areas include the front wheelhousing area and engine compartment.

Road splash will affect undercarriage, condenser coil and engine compartment. These areas must be thoroughly cleaned to remove dirt accumulations from flanges, channels and ledges. These places accumulate dirt and salt and hold it in direct contact with steel and aluminum surfaces. Use an understructure high pressure spray as part of a regular wash. Damaged undercoating or paint should be promptly repaired before corrosion can start.

Frequency of wash periods depends on operating conditions. During periods of exposure to salt, daily washing as described above is recommended. If underbody parts show evidence of rust or corrosion, treat as follows:

1. Remove dirt, grease and oil by solvent washing.
2. Remove corrosion as well as all loose coating by sanding with a wire brush or sandblasting.

Caution: *Sandblasting can be used for cleaning bulkheads, brackets and other structural members. It should not be used for exterior side panelling. Extreme care should be taken not to sandblast excessively.*

3. Apply correct primer, paint and undercoating after removing all corrosion to prevent further damage.

4. FIBERGLASS REPAIR

All repairs to fiberglass parts consist of filling the damaged area with fiberglass cloth and resin or strand fiberglass and resin. The repair is allowed to harden and then the finishing operations are performed. Use of the various materials is determined by the type of repair to be made. Large holes, torn sections and separate joints require the adhesive qualities of the resin and the reinforcing qualities of the fiberglass. Small dents, scratches or pits can be repaired using resin and strand fiberglass and filler mixed into paste. Instructions for either mix are explained under their respective headings in this section.

For best results when making repairs, temperature should be between 70 and 75 °F (21-24 °C). Some people experience a skin reaction to resins. In such cases, wipe skin off

with denaturated alcohol or a good thinner. Use of protective hand cream is recommended.

Warning: *Always wear a respirator and goggles when grinding or sanding.*

Extreme care must be taken if the sander is electrically operated, as dust from some resins is combustible when subjected to sparks or open flames. The proper tool for sanding resin is a low speed, air driven disc sander with a water attachment or a dry sander having a vacuum bag. Either will eliminate flying glass and resin dust.

The following additional tools and materials will assist in making repairs: hacksaw blade, assorted files, emery paper or cloth (150 or finer), scissors or tin snips, wax paper or cellophane sheets, a 3" (75 mm) paint roller, paint brush, putty knife, acetone and one or more heat lamps.

4.1 Repair With Fiberglass Cloth

Where necessary, sand paint away around damaged area and scrape away undercoating, if any, and wipe clean with solvent. Grind or file the damaged area to form a "V" at the broken or cracked portion. Sides of "V" should have a shallow pitch for maximum bonding area.

Note: *Roughening the surface improves adhesion of resin.*

If part is warped from original shape, use clamping equipment to straighten the surface. Preheat area to be repaired with one or two heat lamps placed 12 to 15 inches (305-380 mm) from repair.

Caution: *Temperature should not exceed 200 °F (93 °C) in order to avoid distortion.*

Cut fiberglass cloth with scissors or tin snips, 1 to 3 inches (25-75 mm) larger than area to be repaired. Build area to desired height.

Mix resin and hardener following instructions on their containers. Saturate layers of fiberglass with mixture and place laminates over damaged area. Smooth out wrinkles and make sure general contour of area is maintained. Bubbles and wrinkles can be eliminated with a roller.

Caution: *The pot life of the mix is approximately 15 minutes. Any accidental contamination to the skin, clothing, tools, etc. must be removed within this period. Use acetone to remove uncured resin.*

Heat resin material again by placing heat lamps 12 to 15 inches (305-380 mm) from repaired area. Allow 12 to 15 minutes for repair to cure. After repair is cured, grind, file or sand to contour. Files other than body files may be more suitable. Featheredge and finish sanding.

If small pits or irregularities appear after making repair, correct by using a liberal amount of chopped strand or filler mixed with resin to form a paste. Refer to heading "4.2 REPAIR WITH FIBERGLASS PASTE" in this section.

4.2 Repair With Fiberglass Paste

Fiberglass paste is used for repairing small dents, scratches, and pits. Paste is made by mixing resin, hardener and fiberglass strand or filler to the consistency of putty. Where necessary, sand paint away around damaged area. On underside of coach, scrape away undercoating from damaged area, and wipe clean with solvent.

Preheat the area to be repaired using heat lamps. Mix desired quantities of resin and hardener according to manufacturer's instructions. Add powdered fiberglass strand into mixture to thicken it into a putty state.

Note: *If repair is made on a vertical surface, adding powdered filler material to mixture will reduce tendency of hot resin to flow or run.*

Apply the material with a putty knife or similar object, building material up to the desired contour. For deep filling and on vertical surfaces, several layers of material may be used.

A hacksaw blade, held flat to adjacent contour and then moved in a sawing action across the repair when the resin is in a gel state, will remove excess resin from repair. Finish repair with the same procedure as when using fiberglass cloth.

4.3 Typical Fiberglass Repair Procedure

Remove all loose particles or damaged material using a power sander or rasp. Clean area, overlapping hole approximately 1" to 1-1/2" (25-40 mm) all around. Remove all dirt, grease and paint from area to ensure good bonding surface. Feather the cleaned area all around. See figure 3.

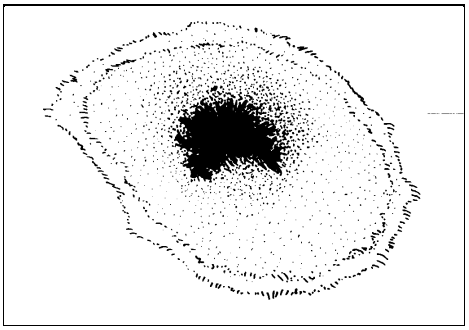

FIGURE 3: FIBERGLASS REPAIR 18089

Cut a piece of fiberglass mat slightly larger than area being repaired. Impregnate mat with general purpose polyester resin catalyzed normally. Use a clean paint brush to apply the polyester resin. Apply impregnated mat over hole and press onto surface with brush to obtain good adherence. Another coat of general purpose polyester resin can be applied at this time. See figure 4.

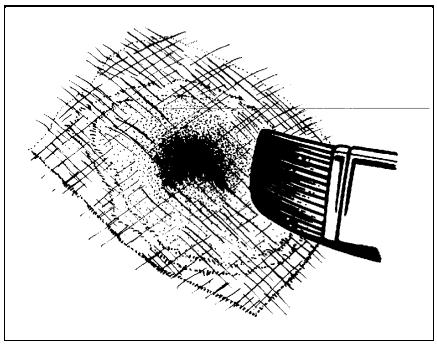

FIGURE 4: FIBERGLASS REPAIR 18090

Note: *Remove all air between surfaces being joined. Allow area to harden and sand surface to remove any wax.*

Apply another mat, followed by a cloth patch, and another mat. All layers must be thoroughly impregnated with polyester resin, brushed well and free of air. Apply more layers of mat and cloth as required until the desired strength and thickness is obtained, minimum two 1-1/2 oz (43 g) mats and one 9 oz (255 g) cloth. See figure 5.

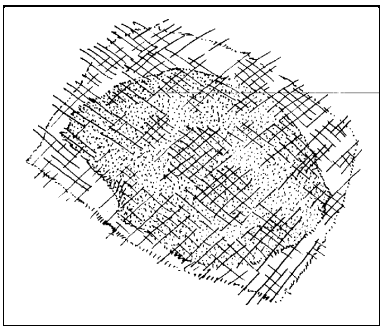

FIGURE 5: FIBERGLASS REPAIR18091

Allow area to harden and contour the area with coarse sandpaper #100. See figure 6.

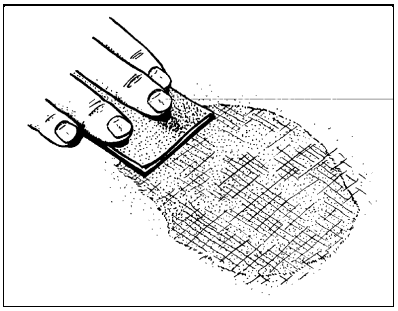

FIGURE 6: FIBERGLASS REPAIR18092

Cover the area with a layer of resin putty and allow to dry for approximately 15 to 20 minutes. See figure 7.

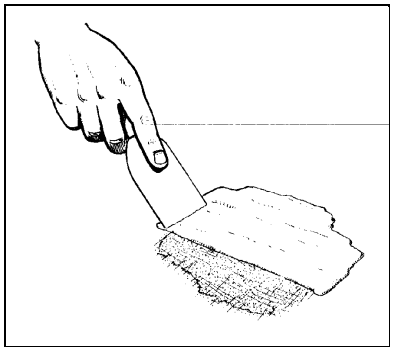

FIGURE 7: FIBERGLASS REPAIR18093

Smooth off surface with coarse sandpaper #100 to desired shape. Further smooth surface with fine sandpaper #120 until repaired surface matches surrounding area panelling. Prime and paint the area to match surrounding paintwork.

5. PAINTING

The standard paint used on the exterior of the vehicle is Deltron PPG. It is a high gloss polyurethane enamel finish designed for exposure to extreme conditions.

5.1 Safety

Care should be exercised in storing, handling, mixing, and applying paint and chemicals listed in this manual. The topcoat, primer, solvent, catalysts, accelerators, and cleaners are highly volatile and/or toxic if not properly used. Observe all safety instructions marked on the different packagings, as well as the following:

1. Do not smoke in the paint room or in adjacent area exposed to residue fumes.
2. Wear respirators approved by the governing safety and health regulations.
3. Maintain adequate ventilation at all times.
4. Dispose of any leftover paint mix properly.
5. Wear rubber gloves, rubber apron, and face shield during all phases of paint and chemical handling.

5.2 Surface Preparation

5.2.1 Aluminum Surface

Sand large surfaces with P150 grit sandpaper and other surfaces with "Scotch-Brite" or similar abrasive pad.

5.2.2 Fiberglass Surface

Sand large surfaces with P180 grit sandpaper and other surfaces with "Scotch-Brite" or similar abrasive pad.

5.2.3 Washing

1. With an air pressure jet, clean the surface from top to bottom and from front to back.
2. Clean the entire surface with a tag rag.
3. Wash the entire surface with a mix of thinner (2 parts) and isopropyl alcohol (1 part). Wash small zones and wipe before the surface dries by itself.

5.3 Primer Application

Warning: ***Always prepare primer in well ventilated area.***

5.3.1 Aluminum Surface

1. Stir primer for two minutes.
2. Mix: 1 part PPG epoxy primer DP-40 (Prévost # 681078).
   1 part PPG epoxy activator DP-401 (Prévost # 681079).
3. Wait 30 minutes before application.
4. Adjust gun pressure to 45 psi (310 kPa).
5. Spray a wet coat uniformly while holding gun at 8" (20 cm) and perpendicular to the surface.
6. Allow 1 hour to dry, and not more than a week before painting.

5.3.2 Fiberglass Surface

1. Stir primer during 2 minutes.
2. Mix: 5 parts PPG high solid primer K-36 (Prévost # 681927).
   1 part PPG activator K-201 (681928).
   1 part PPG thinner DT-895 (Prévost # 681926).
3. Adjust gun pressure to 45 psi (310 kPa).
4. Spray a wet coat uniformly while holding gun at 8" (20 cm) and perpendicular to the surface.
5. Allow 1 to 2 hour to dry.

5.4 Painting

Sand the entire surface with P320 grit sandpaper. Wash the surface in accordance with the washing procedure described in the surface preparation section.

5.4.1 PPG Paint Application

1. Clean the entire surface with a tag rag.
2. Using a paint gun, apply PPG anti-static DX-103 (Prévost # 682003) while holding the gun at 12" to 15" (30 to 38 cm) from the surface.

3. Mix: 1 part PPG base color DBU.
   1 3/4 parts PPG reactive thinner DRR-1185 (681931).
4. Adjust gun pressure to 45 psi (310 kPa) for solid color or to 55 psi (380 kPa) for metallic color.
5. Spray color uniformly while holding gun 8" to 12" (20 to 30 cm) and perpendicular to the surface. Repeat until you have a good color coverage (3 to 5 coats). Wait 5 to 10 minutes between each coat.
6. Allow 1 hour to dry.

5.4.2 PPG Clear Application

1. Wash the surface with rags and a solution of water (3 parts) and isopropyl alcohol (2 parts).
2. Apply PPG anti-static DX-103 (Prévost # 682003) while holding the gun at 12" to 15" (30 to 38 cm) from the surface.
3. Clean entire surface with a tag rag.
4. Mix: 2 parts PPG clear DCU-2001 (Prévost # 681929).
   1 part PPG thinner DT-885 (Prévost # 681925).
   1 part PPG activator DU-6 (Prévost # 681930).
5. Adjust gun pressure to 55 psi (380 kPa).
6. Spray a coat uniformly while holding the gun at 8" (20 cm) and perpendicular to the surface. Wait 5 to 10 minutes and spray a second clear coat.
7. Allow 16 hours to dry.

6. COACH FRONT AND REAR BUMPERS

6.1Repair of Superficial Damage

This procedure defines a method of repairing bumper surface damages such as superficial scratches or scuffing which are unacceptable in appearance only. For substantial bumper damages such as cracks, tears or holes, refer to heading "6.2 REPAIR OF SUBSTANTIAL DAMAGES" in this section.

1. Inspect the damaged area as follows:
   a) If a rough edge of paint is apparent immediately surrounding the scratch or scrape, lightly wipe the local area with a tack cloth or very fine steel wool, "000" maximum. This should remove residual flakes or paint build-up.
   b) If grease and/or oil contaminants are apparent close to the damaged areas, wipe the surface with any commercially available grease remover.

Caution: *Do not use silicone-based materials to remove contaminants.*

2. Locally wipe the damaged area with mineral spirits or the equivalent, ensuring that any grease remover from step 1(b) is covered. Allow sufficient time for all solvents to vaporize prior to painting (5 to 10 minutes).
3. Apply the recommended repair paint, either aerosol or air spray gun, to the damaged area. The can or spray gun should be kept at a distance of 6 to 10" (150 to 250 mm) from the surface to be covered, with continuous side-to-side motion, sweeping across the damaged area. To ensure a good blend with existing paint, the sweeping motion should begin and end to the side of the area to be covered. Larger areas to be covered will require the back-and-forth sweeping motion to be gradually moved up and/or down, as shown in figure 8.

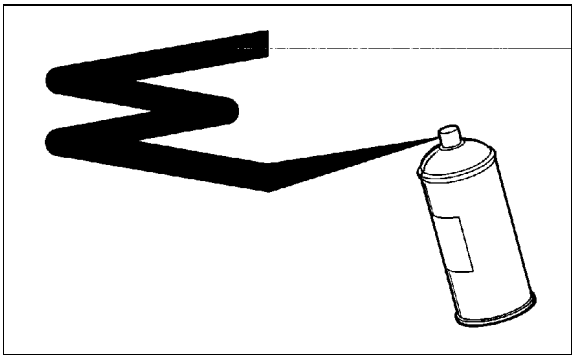

FIGURE 8: REPAIR PAINT 18094

Note: *Except for H3-45 VIP body-colored bumpers, the recommended repair paint is Tempo Color Spray #411 (black).*

4. Allow a minimum of 10 to 15 minutes for the paint to dry, 5 minutes for parts which are heated at the time of painting.

6.2 Repair of Substantial Damage

Note: *The following material can be purchased locally:*

- Three kits of 3M #8101 Structural Adhesive, Components A and B
- Applicators
- 3M Auto Body Repair Tape (Prévost # 06935)
- Grinder or sanding block with #36 disc or coarse sandpaper
- 220, 320 and 400 grit sandpaper.
- Any generally acceptable oil or grease remover.

1. Wipe the damaged area with solvent to ensure a clean surface.
2. Remove enough surface material using a grinder or rough sanding block to ensure maximum adhesion of repair material.
3. Bevel the front edges of the crack or hole.
4. Featheredge the paint around the abraded area.
5. Clean the repair area with a soft, dry cloth or air gun.
6. Wipe the back side of the repair area with solvent for maximum strength and apply auto body repair tape. Make sure that the edges of the damaged area meet evenly.
7. Mix A and B components of the 3M Structural Adhesive #8101 according to directions.

Note: *To prevent air bubbles during mixing, the components should be scraped together with downward pressure and spread thinly on the mixing board. Adhesive should be used within 2 minutes. Observe safety precautions.*

8. Apply a thin layer of adhesive to the damaged area with an applicator. Allow it to stiffen (approximately 15 minutes). Mix additional adhesive and apply to restore the contour.

Note: *In restoring the contour, spread the edges toward the center, filling all low areas. If voids, bubbles, or low areas occur, mix more adhesive and apply.*

9. Allow a 24-hour room temperature cure for optimal results before sanding. If a faster cure is necessary, application of heat by heat lamp or hot air gun may be utilized.

Note: *If heat is applied, maintain the temperature between 150 and 200 °F (65-90 °C) for 20 to 30 minutes.*

10. Grind or block-sand the repair area to the correct contour. Grind with a #220 disc, followed by 320 sandpaper, followed by 400 wet-or-dry.
11. Redo contour on any low spots with additional adhesive.
12. Clean off the repaired area and refinish the part according to the instructions under the heading "6.3 REFINISHING PROCEDURE" in this section.

6.3 Refinishing Procedure

Bumpers that are factory painted have a flexible, very tough, abrasion and weather resistant, elastomeric enamel coating that has been baked on at approximately 250 °F (120 °C). There may be collisions or accidents in which the paint is marred to such an extent that refinishing is desirable. When paint baking facilities are not available, air-dry repair systems, such as those used in soft fascia passenger car body repair, are suggested.

Excellent results from the standpoint of flexibility, adhesion to surface material, and gloss may be obtained with two-component urethane enamels. These systems consist of a reactive enamel and an activator.

Note: *If needed, a reducer may be added. DuPont's Imron is widely used.*

Two-component systems generally do not have as high a degree of flexibility as the one-component urethane enamels, but are designed for applications where high temperature baking is not feasible.

Less desirable, but often providing an excellent finish, are the flexibilized acrylic lacquers. These lacquer systems are composed of a base lacquer, a solvent, and an elastomeric additive. PPG's Ditzler is widely used, as well as systems from DuPont and Sherwin Williams. These are readily available

at body repair shops and automotive parts dealers.

6.3.1 Surface Preparation

Surface preparation is the most important step in repainting. Water soluble dirt should be removed first, followed by a thorough cleaning with a wax and grease removing solvent. Bumpers that have been punctured, cut, or gouged should be repaired according to instructions for the 3M adhesive under the heading "6.2 REPAIR OF SUBSTANTIAL DAMAGES" in this section. The patch should be sanded to the level of the surrounding bumper surface.

Painted surfaces, as well as exposed surfaces, should be sanded with a fine grit (400) sandpaper until the enamel finish is dulled. The entire face should be sanded since it is difficult to match colors in spot refinishing. Sanded surfaces should again be cleaned with a good wax and grease removing solvent to ensure good wetting of the surface and to prevent *"fish eyes"* formation.

6.3.2 Prime Coat

Most lacquer manufacturers recommend a separate primer coat before applying the color coat to produce maximum adhesion. Check specific directions on the manufacturer's label.

6.3.3 Color Coat

In applying final coatings, several wet coats should be sprayed with flash time between coats depending on hiding power and color match. Application information, as well as air-dry time, should be specified on the product container. Repairs should be allowed to dry overnight before putting bumper in service.

Warning: *Proper precautions must be taken when applying air-dry elastomeric paints. Refer to manufacturer's warnings for details.*

6.4 Front Bumper Removal and Installation

The front bumper is hinged to give access to the spare wheel and tire compartment. Bumper must first be tilted down before its removal. Two persons are required to remove and install the front bumper.

Warning: *Front bumper weighs approximately 220 lbs (100 kg). Use proper lifting equipment to support the bumper during the removal and installation operations to avoid personal injury.*

1. Loosen 2 nuts on binding rods from under the bumper while holding the bumper closed. See figure 9.



FIGURE 9: FRONT BUMPER 18057

2. Hold bumper and push binding rods up to remove the 2 binding rod hooks from their respective attaching points. See figure 10.

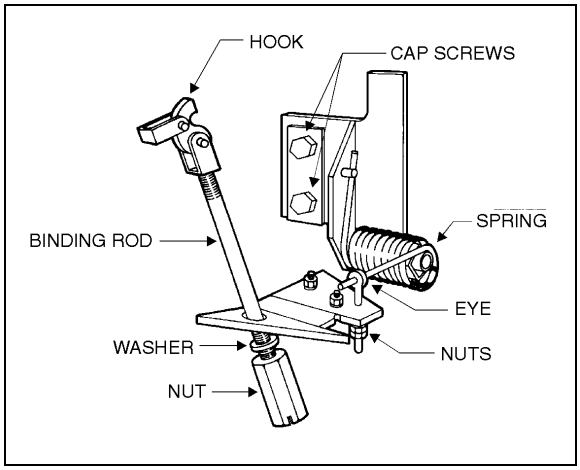

FIGURE 10: FRONT BUMPER 18095

3. Partly recline the bumper, remove both chain end snap hooks from their attaching points, and let the bumper rest face down on the lifting equipment platform.

4. Ask assistant to relieve spring tension on one eye bolt with proper tool. Remove 2 nuts and eye bolt holding spring and slowly release spring. Repeat procedure for the other eye bolt.

Note: *A convenient tool to relieve spring tension can be fabricated with 2 lengths of square tubing approximately 30" (75 cm) long, welded together, and fitted at one end with a cut-out adapter to hold the spring. See figure 11.*

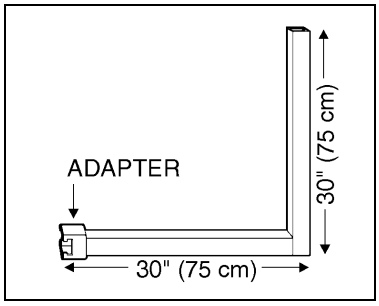

FIGURE 11: TOOL 18096

5. Remove 4 cap screws holding bumper to vehicle and remove bumper.
6. To install bumper, reverse the removal procedure.

Caution: *Check that binding rod hooks are properly anchored when bumper is tilted up before tightening binding rod nuts. Tighten binding rod nuts firmly.*

6.5 Rear Bumper Removal and Installation

1. Remove 4 cap screws and washers retaining the rear bumper top panel and remove panel.
2. Remove 6 cap screws and washers holding bumper to engine frame, 3 at each end, under the bumper.
3. Remove 6 cap screws and washers holding bumper to engine frame, 3 at each end, above the bumper and remove bumper.
4. To install bumper, reverse the removal procedure.

7. COACH ENTRANCE DOOR

7.1 Description

An air operated "sedan-type" entrance door, with an air door cylinder and damper assembly are installed under the right- hand dash. The opening and closing door speeds cycles is adjustable by a damper mounted in parallel with the door cylinder on the door hinge (Fig. 12). Door activation is controlled by a relay panel, located near defroster-wiper motor. The accessory air reservoir supplies air to this system.

The door is held in the closed position during coach operation by two air cylinder locking mechanisms. Air cylinders with return spring in the cylinder body are used (Fig. 13). Air cylinders are controlled by an electrically operated solenoid valve energized by a rocker switch located under the right-hand dashboard.

To open the door, initial movement of the rocker switch de-energize the air lock solenoid valve and venting the door locking cylinder. The locking return spring pulls the door lock away from the latch, unlocking the door. The air cylinder door movement start only when pressure in the central air lock door is below 10 psi. The "air cylinder open solenoid valve" opens and allows air to flow to the air cylinder, the "air cylinder close solenoid valve" exhaust air from cylinder rod side .

To close the door, initial movement of the switch energize the "air cylinder close solenoid valve" and air flow to the cylinder by its rod side extremity. The "air cylinder open solenoid valve" exhaust air from cylinder. When entrance door latch is grounded with the door frame the air lock solenoid valve is de-energized and load the door lock cylinders. The cylinder moves the door lock in a position which engages a latch on the entrance door, holding the door positively closed.

Emergency exit valves, which opens the air valve circuit is for emergencies, or when the door control system does not function properly.

Refer to the air system schematic diagram annexed at the end of Section 12, "Brake" and to the page 22 of the wiring diagram.

7.1.1 Operation

The air-operated door is controlled from inside the coach by a rocker switch located on the R.H. dashboard. Opening and closing of the door from outside the coach is accomplished by a momentary toggle switch located behind the front door switch access panel.

To close the door, the switch must be held in the desired position until the door has completed its movement.

To open the door, the switch must be flipped one time in the desired position. The door will fully open automatically and the system will keep pressure in the open cylinder locking the door in the open position after the door has been opened. The door can be stopped in any position by engaging the close side of the switch momentarily. If door is stopped during is opening movement then the system will not keep pressure in the open cylinder and will not lock the door in the open position after the door has been opened.

If the door has been locked with the key, a lever on the door can be moved to unlock

7.1.2 Emergency Exit Valves

From inside the vehicle, an emergency exit valve, located near the door on the dash panel, releases the pressure from the lock cylinders. From the exterior, an emergency exit valve in the front service compartment, also releases the air from the lock cylinders.

7.1.3 Without Air and With or Without Electricity

If the air pressure drops while with or without electricity, the spring loaded cylinders will unlatch the door. In such a case, unlock the door by moving the lever on the door or by using the key, then open the door manually.

7.1.4 With Air and Without Electricity

From inside the vehicle, turn the emergency exit valve to the "UNLOCK" position. Move the lever. From the exterior, turn the emergency exit valve to the "UNLOCK" position. Open the door. Close it, lock with the key and reset the outside emergency exit valve to the "NORMAL" position.

7.2 Adjustment and Maintenance

7.2.1 Door Speeds Cycles Adjustment

1. Remove the two panels located right from the stepwell, as well as the door's upper hinge cover.

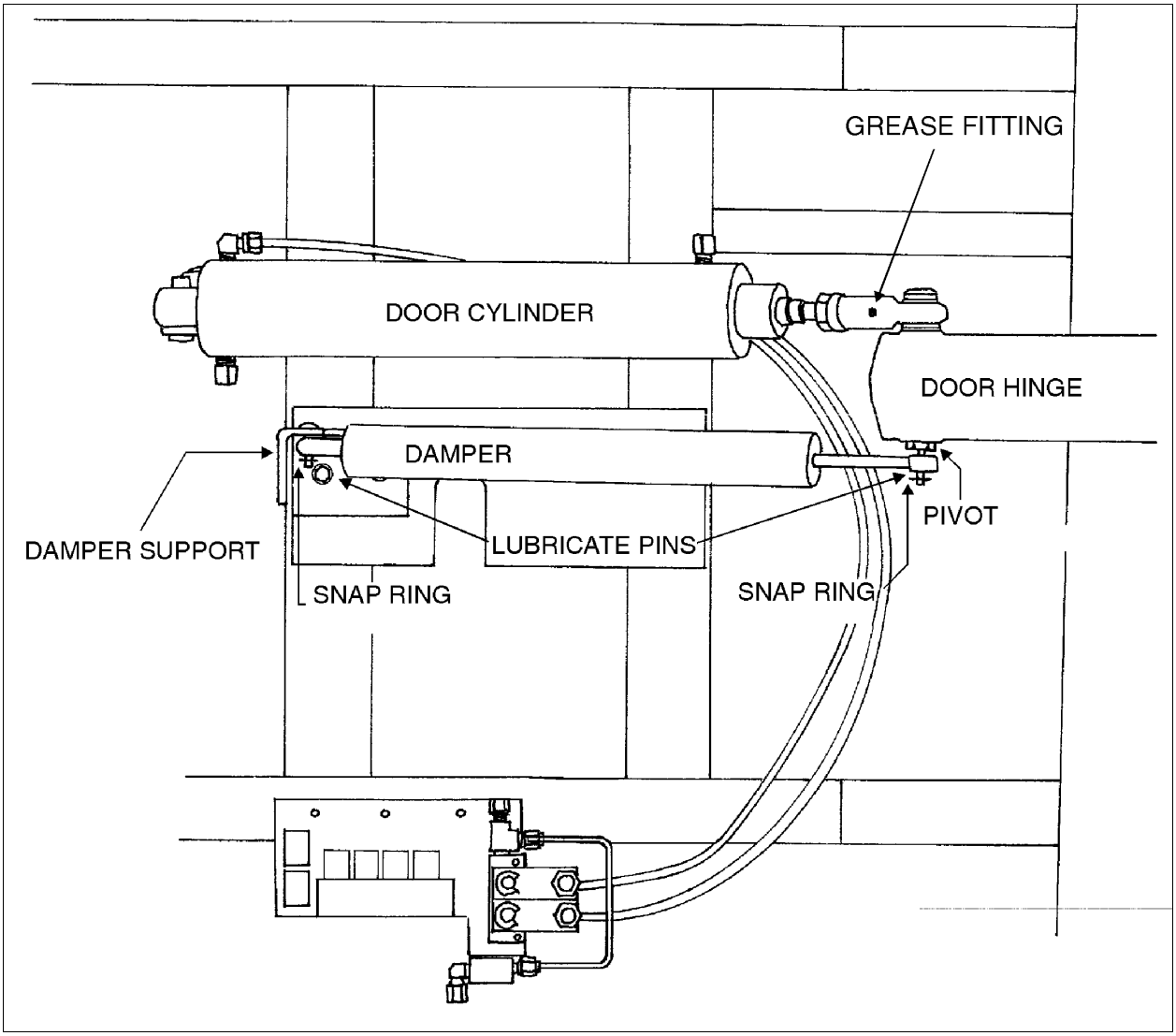

FIGURE 12: DOOR CYLINDER AND DAMPER
18160

Caution: *It is important to make sure that damper does not reach end of stroke when door is completely closed or opened. The door cylinder must stop the door on opening. Screw or unscrew rod end to adjust if necessary.*

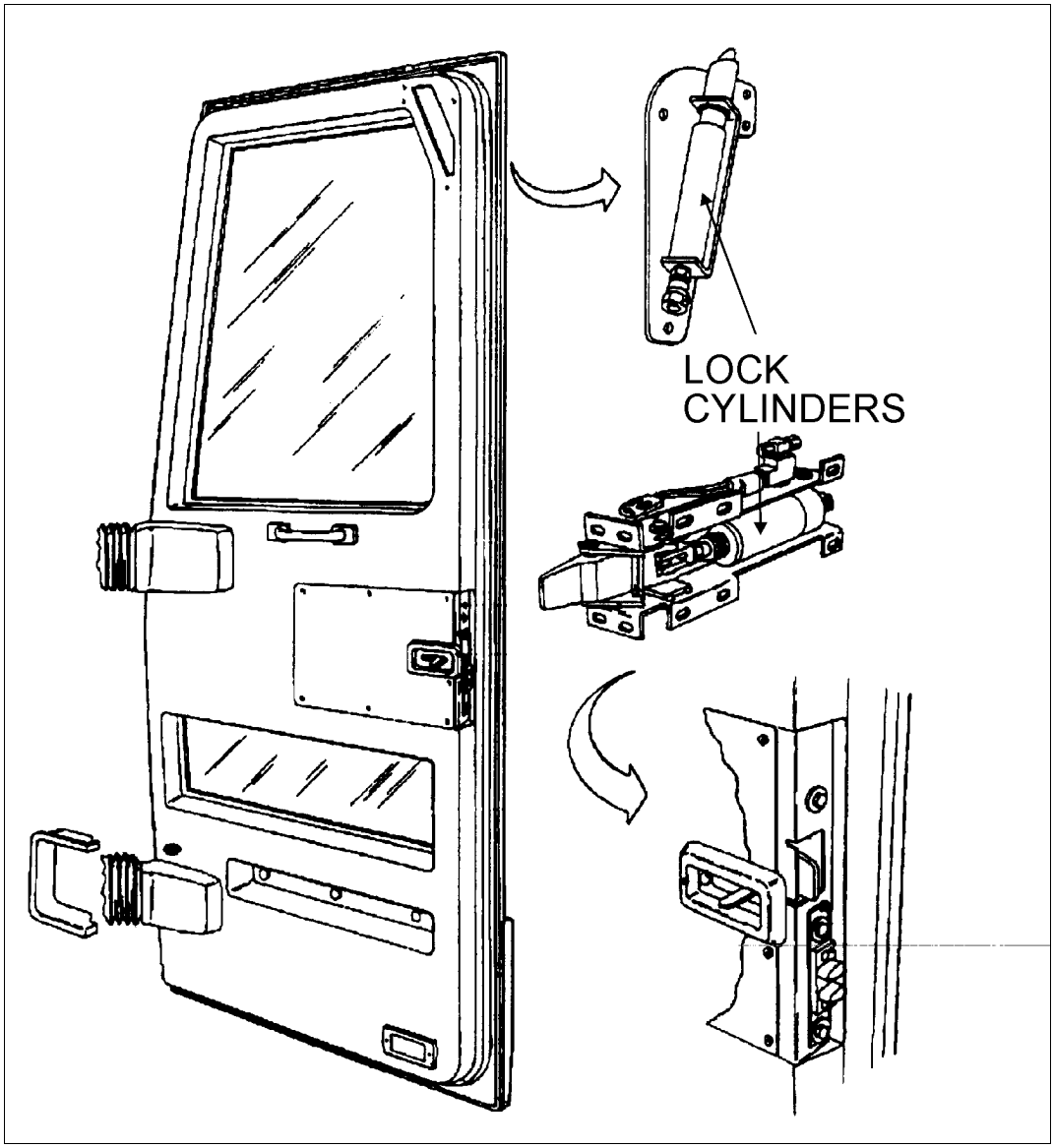

FIGURE 13: COACH ENTRANCE DOOR 18168

2. To adjust opening and closing cycles speeds on damper (Fig. 12): turn the dials one position, open and close the door, and repeat since desired opening and closing speeds of the door are obtained (best position are between 3 and 5 on the dials). Use the hexagonal key provided to lock the dials (Fig. 14).



FIGURE 14: DAMPER 18161

3. Reinstall panels and door hinge cover.

7.2.2 Horizontal and Vertical Adjustments

Before attempting to correct any door operating problem by adjusting any part of the air cylinder assembly, first perform the following mechanical checks and procedure.

- Check that the door is not binding of front or rear posts, at top, or at bottom. If any of these conditions exist, adjust as follows:

1. Remove the screws and the plastic moulding covering each of the hinges.

Note: *Ask an assistant to help you to perform the following adjustments.*

2. Remove the Allen button head screw and the washer retaining the rod end with bearing to the upper hinge. See figure 15.

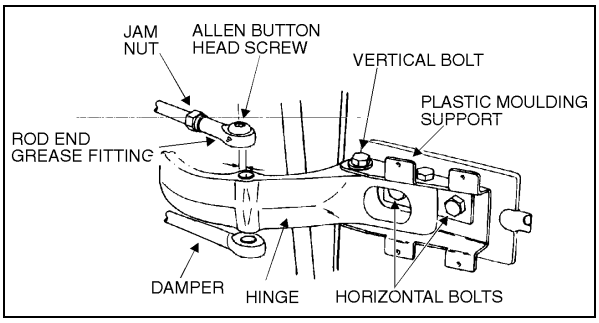

FIGURE 15: UPPER DOOR HINGE 18058

3. Support the door with a wooden block and a hydraulic jack.

4. Loosen the horizontal bolts retaining the door to the hinges, adjust the door horizontally and vertically with the jack, tighten the bolts to 30-36 lbf•ft (40-50 N•m). Remove the jack and the wooden bloc.

Caution: *Make sure the front side door does not interfere with the exterior panel.*

5. Pull and fix the rod end to the hinge with the washer and the button screw.

6. Using the screws, fix the plastic mouldings covering the hinges.

7.2.3 Depth Adjustment

1. Turn the emergency exit valve to the "UNLOCK" position.

2. Remove the screws and the plastic moulding covering each of the hinges.

Note: *Ask an assistant to help you to perform the following adjustments.*

3. Remove the Allen button head screw and the washer retaining the rod end with bearing to the upper hinge. See figure 15.

4. Loosen the vertical bolts on the hinges for the front section, and for the rear section, move the central door catch on the door frame.

5. To adjust the male dovetail on L.H. side of the door, remove the two screws and loosen the two bolts. Slide the male dovetail toward the interior and lightly tighten the two bolts. Close the door slowly but firmly, then slowly open it, and tighten the two bolts. Fix dovetail to the door with the screws. See figure 16.

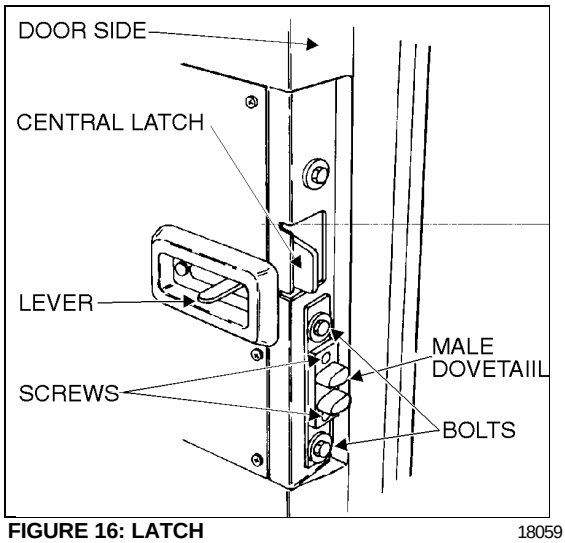

FIGURE 16: LATCH 18059

Note: *The frame dovetail is not adjustable.*

6. Pull and fix the rod end to the hinge with the washer and the button screw.
7. Using the screws, fix the plastic mouldings covering the hinges.
8. Reset the emergency exit valve to the normal position.

7.2.4 Rod End With Bearing Adjustment

1. Turn the emergency exit valve to the "UNLOCK" position.
2. Remove the screws and the plastic mouldings covering the upper and lower hinges.
3. Remove the Allen button head screw and the washer retaining the rod end with bearing to upper hinge. See figure 15.
4. Loosen the jam nut locking the door cylinder rod end with bearing. Close the door firmly, adjust the rod end with bearing center hole in order to be 3/16" (4,5 mm) eccentric toward the left with the hinge hole center. Tighten the jam nut.
5. Pull and fix the rod end to the hinge with the washer and the button screw.
6. Using the screws, fix the plastic mouldings covering the hinges.
7. Reset the emergency exit valve to the normal position.

7.3 Lubrication

	Lubricant	Frequency
• Latches • Upper door catch • Door cylinder rod end with bearing grease fitting (Fig. 12)	Low temperature grease	Every six months
• Door locking mechanism	White grease	Every six months
• Key hole • Damper pins (Fig. 12) • Hinges	Low viscosity oil	Every six months

7.4 Specifications

Door cylinder
Manufacturer .....Bimba
Type .....Pneumatic
I.D. .....1 1/2" (mm)
Stroke .....8" (mm)
Prévost number 780560

Damper
Manufacturer .....Enidyne
Supplier number FP49572103
Prévost number 780559

Lock cylinder (upper)
Manufacturer .....Bimba
Type Air, single action, 1/8 NPT, hexagonal rod
I.D. .....7/8" (22 mm)
Stroke .....1" (25 mm)
Supplier number D-51127-A
Prévost number 641259

Lock cylinder (central)
Manufacturer .....Bimba
Type ..... Air, single action, 1/4 NPT
I.D. .....1 3/4" (45 mm)
Stroke .....1" (25 mm)
Supplier number 241-P
Prévost number 641209

Manifold solenoid
Manufacturer .....Norgren
Type .....4 ports, 1/8 NPT
Voltage ..... 24 VDC
Power consumption ..... 6 watts
Maximum pressure .....150 psi (1 035 kPa)
Prévost number 641130

Solenoid valve (Latching valve)
Manufacturer ..... Humphrey
Model.....310
Operating range.....0 to 125 psi (0 to 860 kPa)
Voltage ..... 24 VDC
Voltage tolerance +10%, -15% of rated voltage
Power consumption ..... 4 watts
Leak rate (max allowed) .....
0.245 in^3/min @ 100 psi (4 cc/ min @ 690 kPa)
Type of operation .....Direct solenoid
Lubrication.....Not required (factory pre-lubed)
Filtration..... 40 micron recommended
Prévost number 641217

Pressure switch assy
Prévost number 452831

7.5 Troubleshooting

SYMPTOM	PROBABLE CAUSE	REMEDY
DOOR WILL NOT OPEN FROM EXTERIOR SWITCH.	Manual door locks engaged.	Release manual door locks (open position).
	Upper and lower solenoid locks do not disengage.	Check voltage at solenoid locks when door is open. If the voltage is 24 volts then replace solenoid #641217. Else, check circuit power.
	Relay module do not receive current.	Reset breaker "ON" or check batteries power supply.
	Opening solenoid door do not receive current.	Check voltage at opening solenoid door. If the voltage is 24 volts then replace it. Else replace control relay.
	Switch malfunction.	Replace switch.
DOOR WILL NOT CLOSE FROM EXTERIOR SWITCH.	Switch malfunction.	Replace switch.
	Solenoid failure	Check voltage at solenoid. If the voltage is 24 volts then replace solenoid. Else, replace control relay.
DOOR WILL NOT OPEN FROM INTERIOR SWITCH.	Manual door locks engaged.	Release manual door locks (open position) from vehicle exterior.
	Upper and lower solenoid locks do not disengage.	Check voltage at solenoid locks when door is open. If the voltage is 24 volts then replace solenoid #641217. Else, check circuit power and replace control relay.
	Module relay do not receive current.	Reset breaker "ON" or check batteries power supply.
	Opening solenoid door do not receive current.	Check voltage at opening solenoid door. If the voltage is 24 volts then replace it. Else replace control relay.
	Switch malfunction.	Replace switch.
	Upper lock stay engage.	Lubricate upper lock assembly. Check wear and replace parts if necessary.
DOOR WILL NOT CLOSE FROM INTERIOR SWITCH	Switch malfunction.	Replace switch.
	Closing solenoid door do not receive current.	Check voltage at closing solenoid door. If the voltage is 24 volts then replace it. Else replace control relay.

SYMPTOM	PROBABLE CAUSE	REMEDY
DOOR WILL NOT OPEN AFTER DRAINING AIR FROM SYSTEM AT EXTERIOR OR INTERIOR EMERGENCY VALVE.	Manual door locks engaged.	Release manual door locks (open position) from vehicle exterior.
	Damper cylinder block the door opening.	Adjust or replace damper cylinder.
	The door stay stuck by upper lock.	Adjust lower lock. Lubricate upper latch bolt. Adjust upper latch height
DOOR LOCK STAY ENGAGED WHEN DOOR IS OPEN	Power supply is cut at solenoid.	Place switch in OPEN position.
	Solenoid lock do not disengage.	Check voltage at solenoid locks when door is open. If the voltage is 24 volts then replace solenoid #641217. Else, check circuit power and replace control relay.
DOOR DO NOT LOCK WHEN DOOR IS CLOSED	Emergency valve is open.	Close emergency valve.
	Lock solenoid stay under voltage because a lack of ground.	Check latch bolt ground on door frame. If needed clean locks for better contact. Check ground circuit.
	Lock solenoid works in reverse.	Reverse air hoses at solenoid locks.
	Relay do not function.	Replace relay.

8. ENTRANCE DOOR (V.I.P.)

8.1 Description

8.1.1 Inside Operation

There are three ways of unlocking the entrance door from the inside. The two first consist in actuating the rocker switch on the lower R.H. side control panel or on L.H. side control panel, but this last operation will also unlock the baggage compartment. Finally, you can unlock door by sliding its lock lever to the left. If the orange tab on the door lock lever is visible, the door is unlocked.

8.1.2 Outside Operation

The first way of locking/unlocking the entrance door from the outside is the front entrance door lock key provided with the vehicle. Turn key to the left to lock or to the right to unlock the entrance door (Fig. 17).

8.1.3 Keyless Entry System

By this system, you can lock or unlock the entrance door and the baggage and service compartment doors. The keyboard is located below the outside entrance door handle. The microprocessor/relay module is pre-programmed by the manufacturer and this code can not be deleted. Moreover, you can program your own entry code (e.g. a birthday or part of a social security number).

When you use the keyless entry system, the keyboard and stepwell lights illuminate. Do not push the buttons with a key, pencil or any other hard object as it could damage buttons. Although each button is provided with two digits separated by a vertical line, there is only one contact per button. Press in center of button, i.e. between the two digits where there is the vertical line.

You must unlock the entrance door before you unlock any other baggage or service compartment doors. If you let more than five seconds pass between the numbers you press, the system shuts down, and you have to enter your code again. If the keyless entry system does not work properly, use the key to lock or unlock entrance or compartment doors.

8.2 Door Adjustments

For entrance door adjustment, refer to paragraph "7.2 Adjustment and Maintenance".

8.3 Lubrication

	Lubricant	Frequency
• Latches • Upper door catch	Low temperature grease	Every six months
• Door locking mechanism	White grease	Every six months
• Key hole • Hinges	Low viscosity oil	Every six months

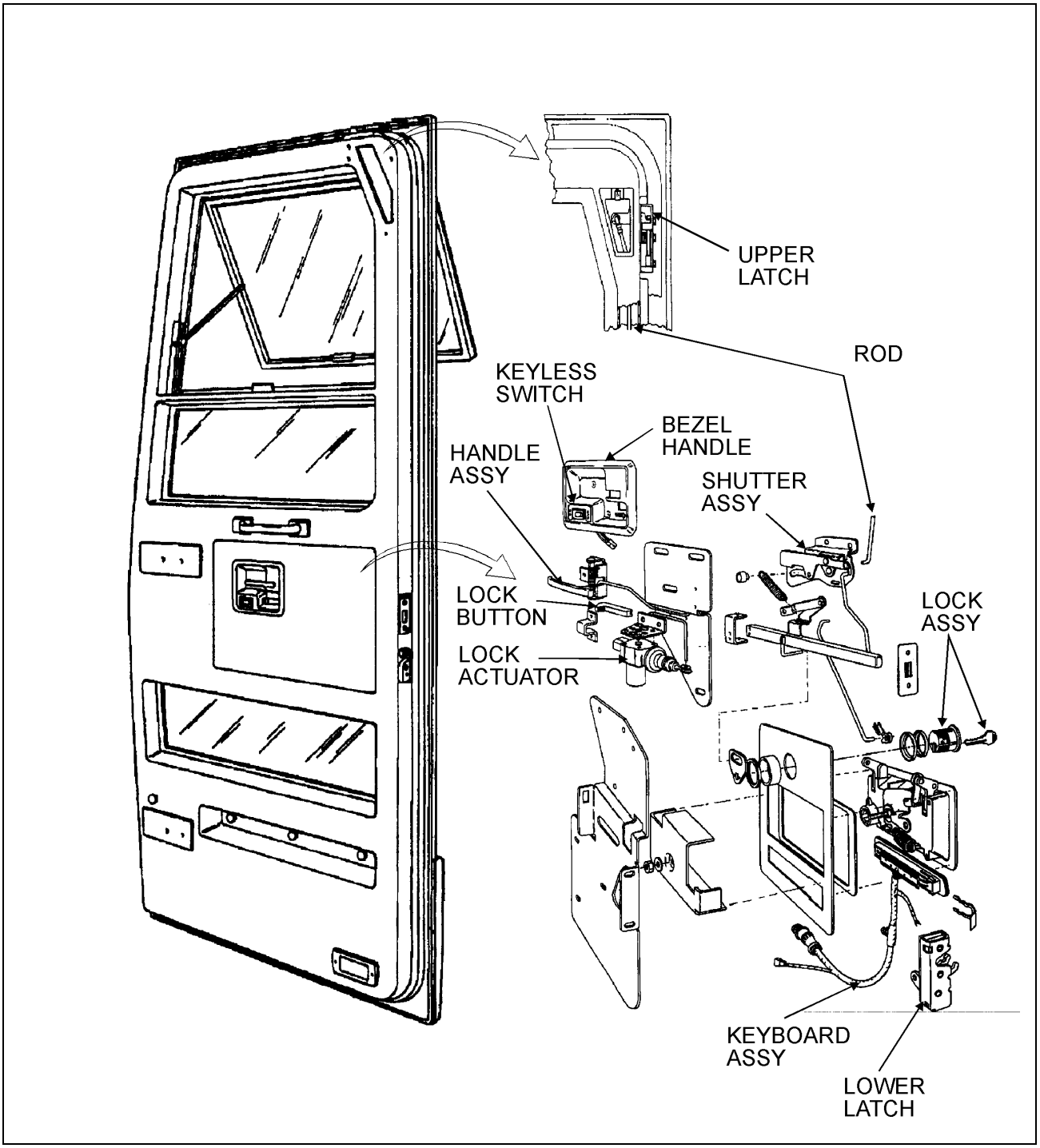

FIGURE 17: ENTRANCE DOOR (V.I.P.) 18169

9. ACCESS DOORS

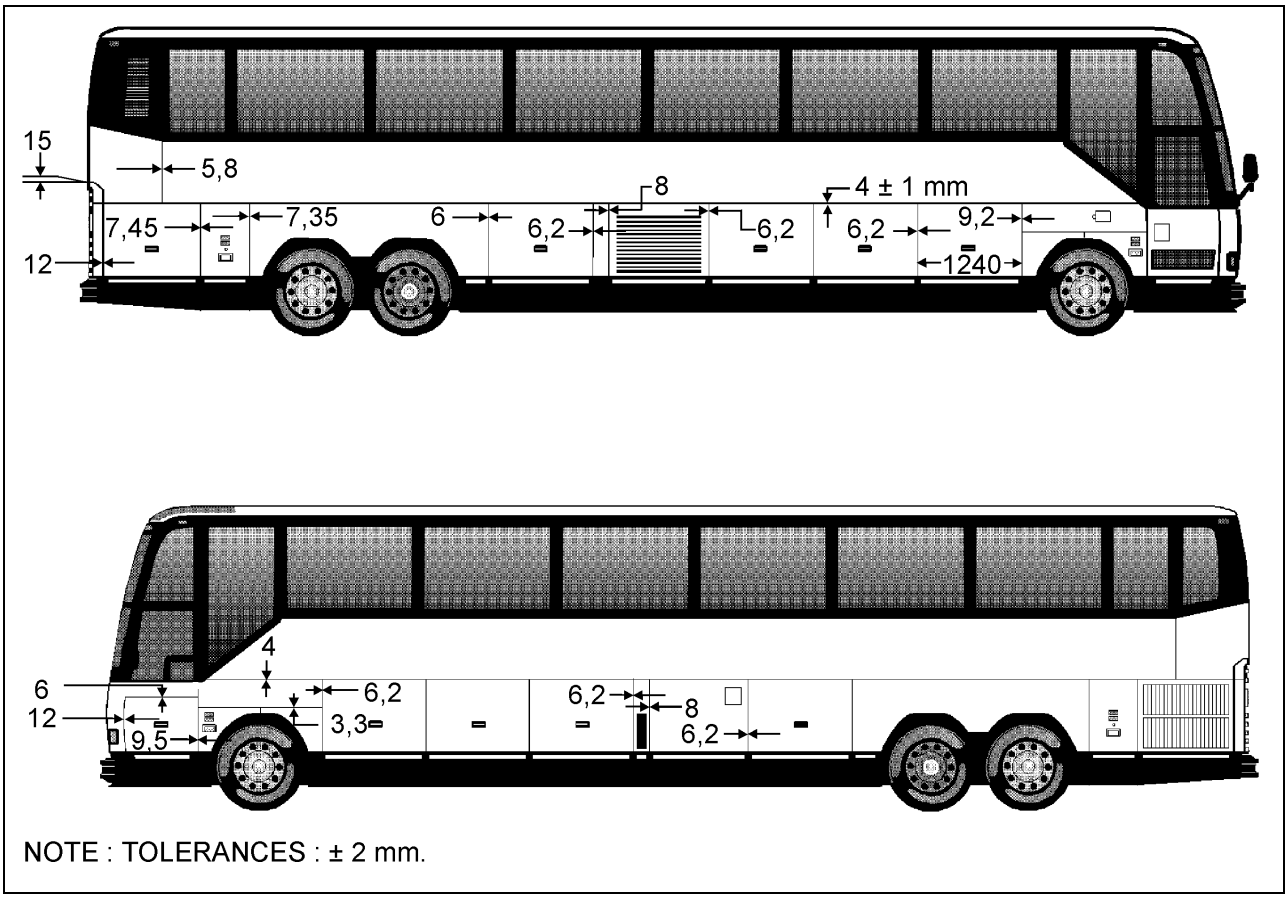

FIGURE 18: REQUIRED DISTANCE BETWEEN EXTERIOR FINISHING PARTS 18190

9.1 Maintenance And Adjustment

Each of the doors should be checked for proper operation. This includes latching. Also, inspect each of the doors for damage, missing, or loose parts. Repair or replace those parts as needed.

10. BAGGAGE COMPARTMENT DOORS

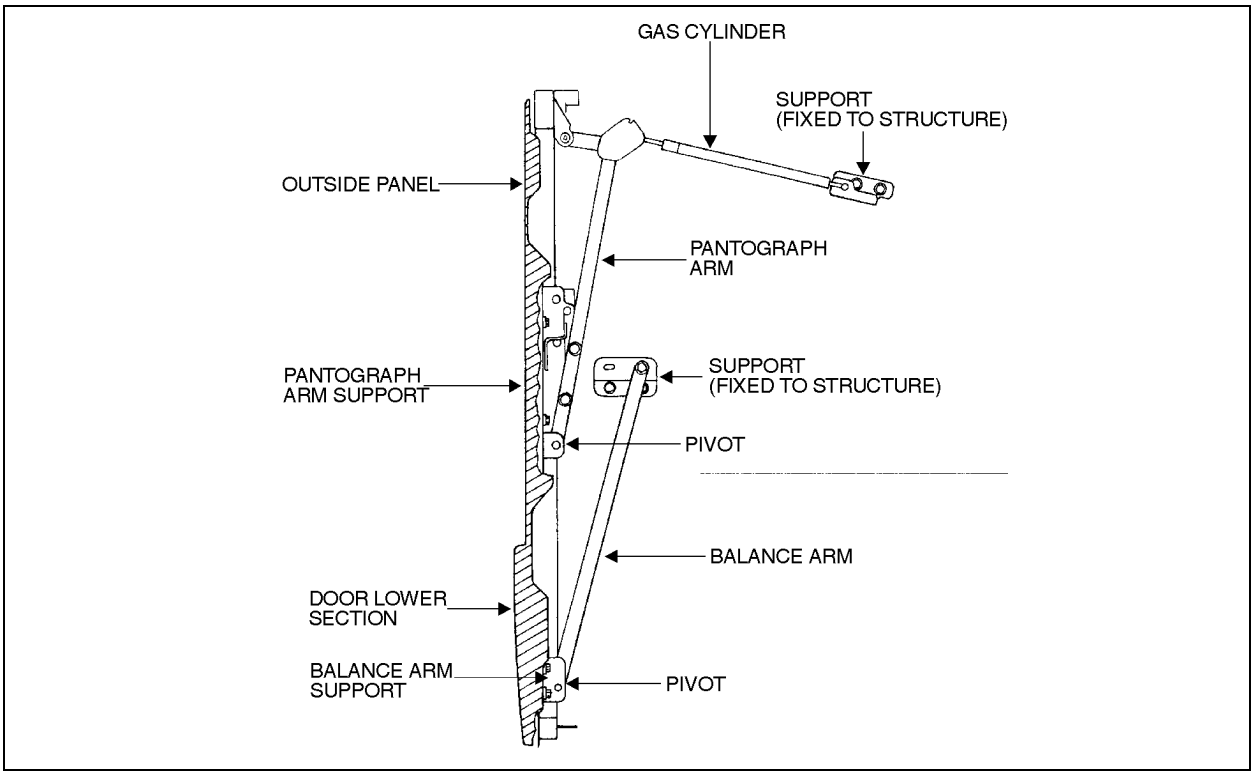

FIGURE 19: BAGGAGE COMPARTMENT DOOR 18061

There are 6 baggage compartment doors on the H3-41, while there are 8 on the H3-45 and the VIP H3-45 bus shell. Each of these doors is of identical design. A centrally mounted, key-lockable door handle unlatches the door which can then be pulled out and raised up in a path parallel to the side of the vehicle. The door is held in fully open position by two fully extended gas-charged cylinders, giving clear access to the opening of the baggage compartment.

From its fully open position, the door can be closed by pulling down on the door panel, which will easily hinge its way back in the contour of the compartment opening and will be held closed by two latches. Each door can be opened by lifting the centrally mounted handle to unlatch the door and lifting it all the way up. If the door does not remain in the fully open position, one or both cylinders on that door is (are) defective. To test the cylinders, first support the door in the fully open position with proper equipment. Disconnect the rod end of one cylinder and try to retract the rod. If strong resistance is felt, the cylinder is in good condition and can be reinstalled. If the rod retracts with little effort, the cylinder is defective and should be replaced at once (Prévost # 980014). Test the other cylinder on that door the same way.

10.1 Adjustment

Warning: *Park vehicle safely, apply parking brake, stop engine and set battery master switches to the "OFF" position prior to working on the vehicle.*

Note: *Refer, if needed, to figure 18 for identification of door components.*

1. With the help of an assistant who will support the door weight, remove bolts retaining door to pantograph and balance arm pivots, then remove door.
2. Measure distance between a pantograph arm end and a straight edge rested on structure. Repeat procedure for the other arm. The distance on each side should be equal. If not, bend arm end until desired measure is obtained. Refer to figure 20.

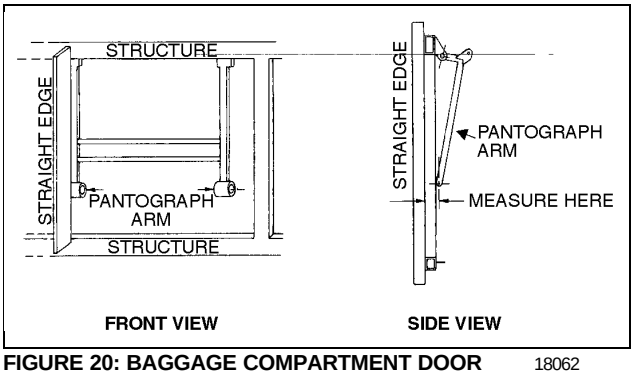

FIGURE 20: BAGGAGE COMPARTMENT DOOR 18062

3. Measure distance between a pantograph arm end and the structure. Repeat procedure for the other arm. The distance on each side should be equal as the pantograph arm assembly must be centered in baggage compartment opening. If not, bend the appropriate pantograph arm end until desired measure is obtained. A difference of 3/32" (2 mm) between both sides is accepted. Refer to figure 21.

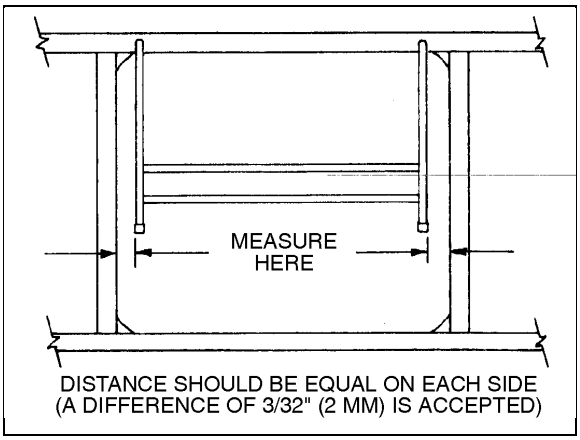

FIGURE 21: BAGGAGE COMPARTMENT DOOR 18063

4. Install the baggage compartment door. Unscrew and remove both striker pins. Loosen bolts retaining door to pantograph and balance arm supports. With door closed, adjust height so the top of the door fits flush with the adjacent doors, then complete tightening the four bolts retaining door to each pantograph arm support. A gap of 1/8" (3 mm) between the top of the door and the stainless steel support is given as a guide. Refer to figure 22.

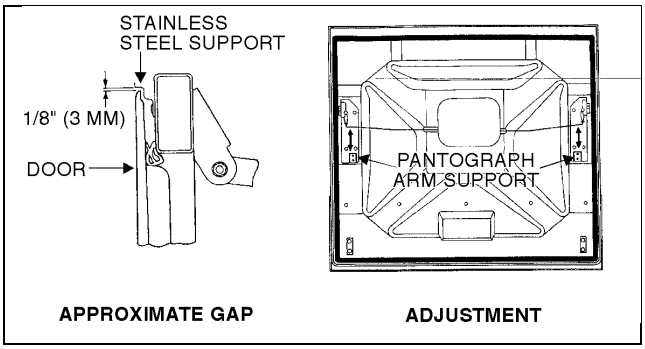

FIGURE 22: BAGGAGE COMPARTMENT DOOR 18064

5. Slightly open the door, position it to obtain a gap of 4" (100 mm) between structure and door panel upper lip, maintain door in this position while an assistant completes tightening the two bolts retaining door to each balance arm support. Refer to figure 23.

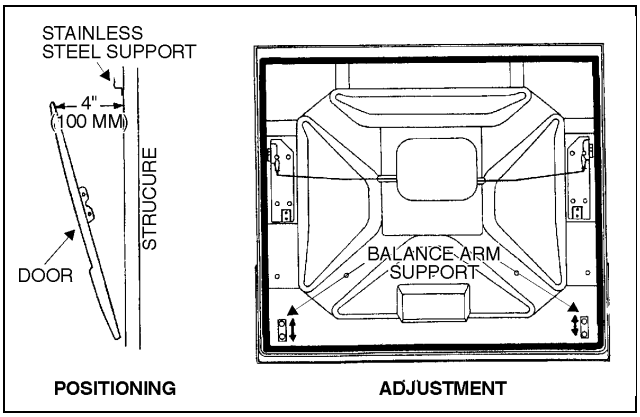

FIGURE 23: BAGGAGE COMPARTMENT DOOR 18065

6. Fully open the door, loosen the two bolts retaining each gas cylinder support to structure, position door parallel with adjacent doors and complete tightening bolts. A measure of 6" ± 1/4", (150 mm ± 7 mm) between door panel lip (at level of upper edge of lower section) and the lateral panel is given as a guide. Refer to figure 24.

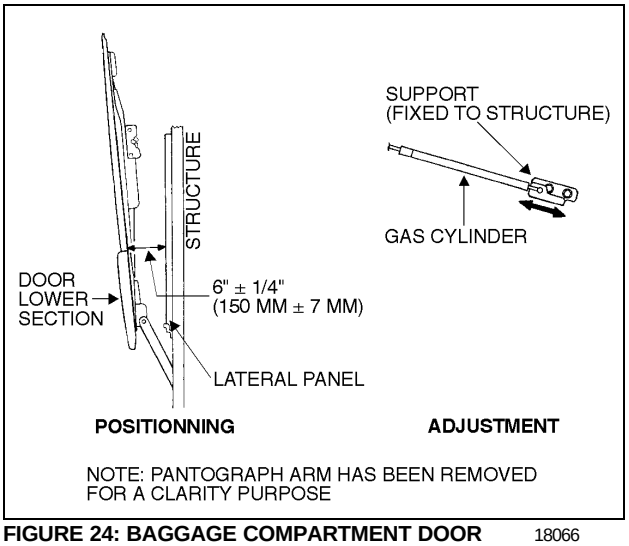

FIGURE 24: BAGGAGE COMPARTMENT DOOR 18066

Caution: *For converted vehicles provided with "Awning" windows, fully open window then adjust door opening angle so the door does not interfere with window.*

7. With door slightly open, pull door handle while an assistant checks that both latches release simultaneously. If not, with latch engaged, gently bend the appropriate latch control rod until proper timing is achieved. Refer to figure 25.

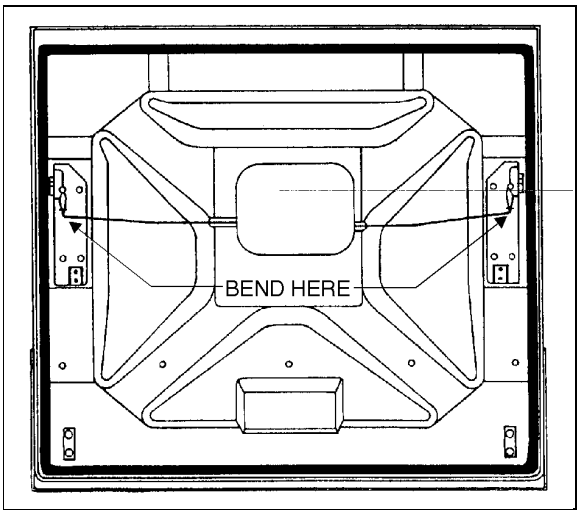

FIGURE 25: BAGGAGE COMPARTMENT DOOR 18067

8. Install both striker pins, bring the door close to them, and adjust the height of pins so they are well centered with latches. Refer to figure 26.

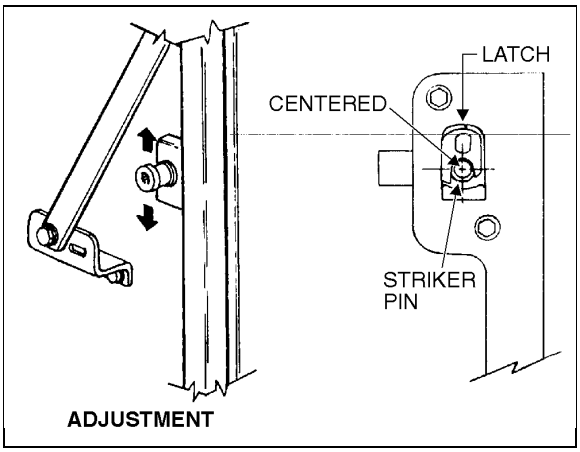

FIGURE 26: BAGGAGE COMPARTMENT DOOR 18068

Note: *Before proceeding with the following step, mark the position of striker pins on structure to avoid upsetting the vertical adjustment of the pin.*

9. Loosen the striker pins just enough to allow them to be moved with a hammer. Working from inside compartment and with the door well-closed (second catches engaged), hit the pin washers to horizontally move the pins and consequently the door, while an outside assistant checks the fit. A gap of 1/16" (+3/64", 1/64") (1,5 mm (+1 mm, -0,5 mm)) between the stainless steel support for the lateral panel and the door panel lip is recommended. Refer to figure 27.

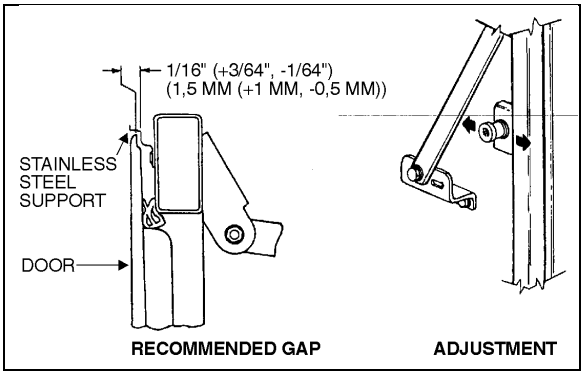

FIGURE 27: BAGGAGE COMPARTMENT DOOR 18069

10. With door well-closed, it should have a gap of 3/8" ± 5/64", (10 mm ± 2 mm) between door panel lip (at level of upper edge of lower section) and structural post. If not, horizontally move pins again until correct gap is obtained. Fully tighten the pins after adjustment is achieved. Refer to figure 28.

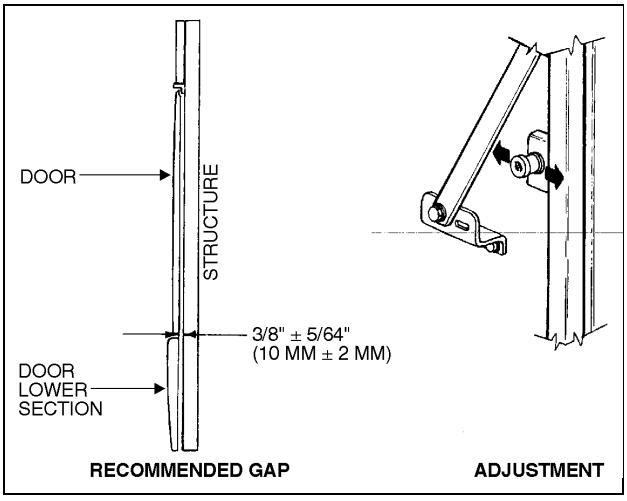

FIGURE 28: BAGGAGE COMPARTMENT DOOR 18070

11. Recheck gap mentioned in step 9. If gap has changed, correct half the change by adjusting arm support fixed to structure. Loosen the bolt supporting balance arm on door lower section and close the door, gap adjustment will automatically result. Tighten the bolt from inside the compartment. Refer to figure 29.

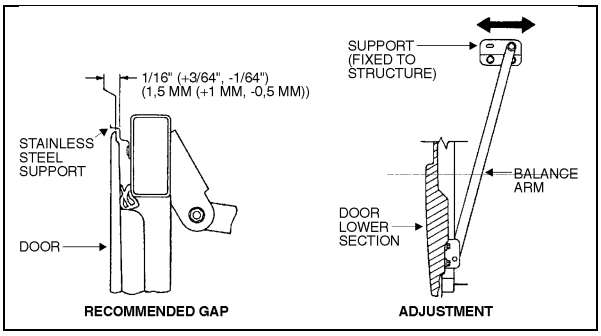

FIGURE 29: BAGGAGE COMPARTMENT DOOR 18071

12. Once the adjustment procedure isachieved, ensure that all bolts are securely tightened.

11. ENGINE COMPARTMENT DOOR

The engine compartment rear door also rises in the same way as the baggage compartment doors and is held open by 3 gas-charged cylinders (Prévost # 980014). The engine compartment opens by lifting a handle accessed from the R.H. side of the engine compartment. When pushed up, the handle pulls on 2 steel wires, each steel wire connected to its respective door latch locking the rear door. Both steel wires are looped at the release handle and can be adjusted to proper length to ensure positive release of both catches when the handle is raised. Refer to Fig. 30).

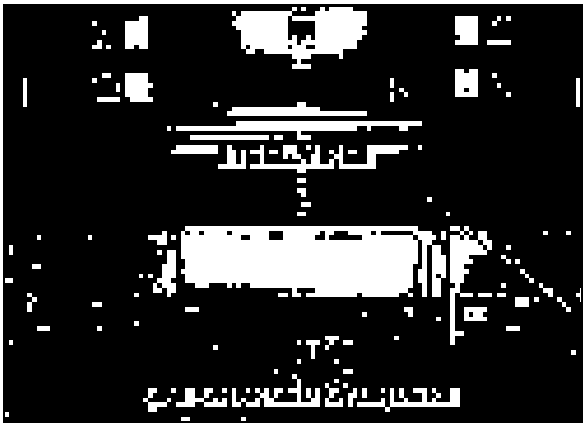

FIGURE 30: ENGINE COMPARTMENT DOOR 18072

12. RADIATOR DOOR

12.1 Door / Hinge

1. Open the door.
2. Loosen the nuts (1, Fig. 31) holding the hinge to the vehicle structure or the nuts (2, Fig. 31) holding the hinge to the door. Loosening nuts (1, Fig. 31) allows the door to be shifted "IN or OUT" and "UP or DOWN". Also, loosening nuts (2, Fig. 31) allows the door to be shifted "LEFT or RIGHT" and "UP or DOWN". Adjust the door position according to the distance needed between exterior finishing parts (Fig. 18). Tighten the nuts.
3. Check that the door swings freely and closes properly. It may be necessary to adjust the door latch to get proper fit and operation.

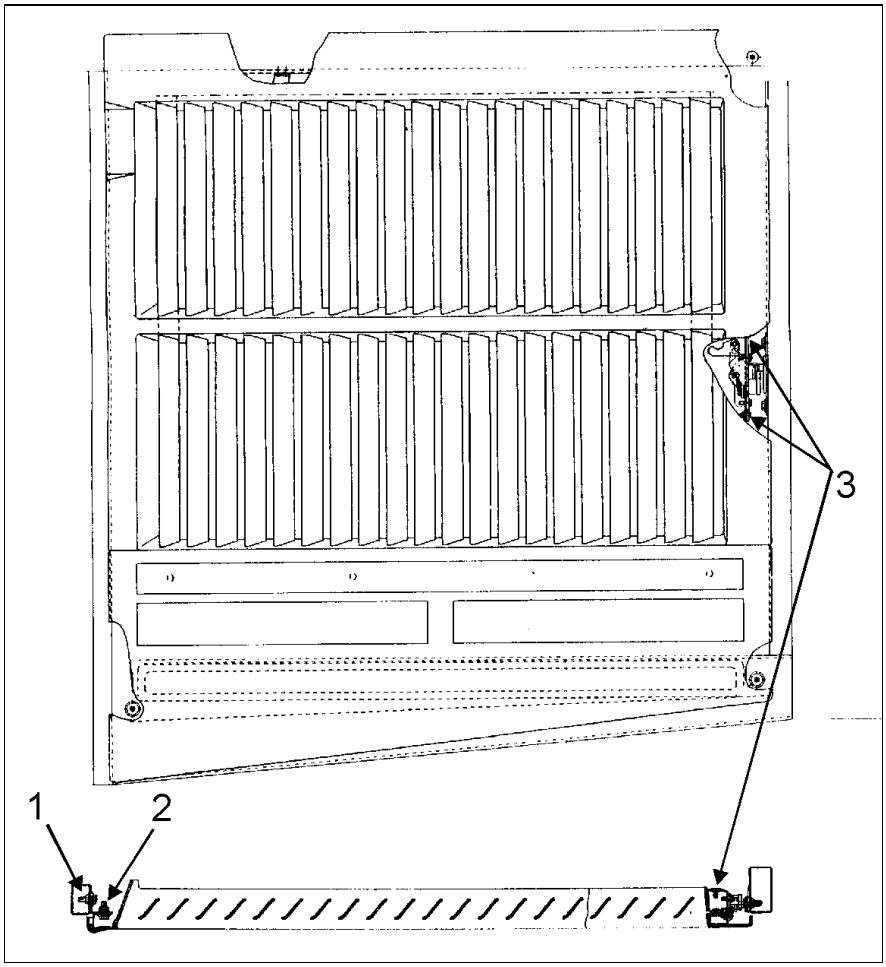

FIGURE 31: RADIATOR DOOR 18191

12.2 Latch Mechanism

To adjust the latch mechanism, open the door to access the screws holding the latch mechanism to the door panel. Loosen the screws (3, Fig. 31) and move the latch assembly as needed. Tighten the screws (3, Fig. 31). Check door fit and operation.

13. CONDENSER DOOR

13.1 Door / Hinge

1. Open the fuel filler door (9, Fig. 32) next to the condenser door.
2. Pull the unlocking rod (8, Fig. 32), located behind the R.H. side fuel filler door, to partly open the condenser door. Push down the release the latch release lever, accessible through the opening, to open the door.
3. Loosen the nuts (1, Fig. 32) holding the hinge (3, Fig. 32) to hinge attachment (4, Fig. 32). Loosening nuts (1, Fig. 32) allows the condenser assembly to be shifted "LEFT or RIGHT" and "UP or DOWN". Adjust condenser assembly position at the hinge. Tighten the nuts. Loosen bracket nuts holding the panel to condenser. Panel (6, Fig. 32) may be shifted "IN or OUT", "LEFT or RIGHT" and "UP or DOWN". Adjust condenser panel at brackets (2, Fig. 32) and (5, Fig. 32). Tighten the nuts. Respect the required distance between exterior finishing parts (Fig. 18).
4. Check that the door swings freely and closes properly. It may be necessary to adjust the door latch to get proper fit and operation.

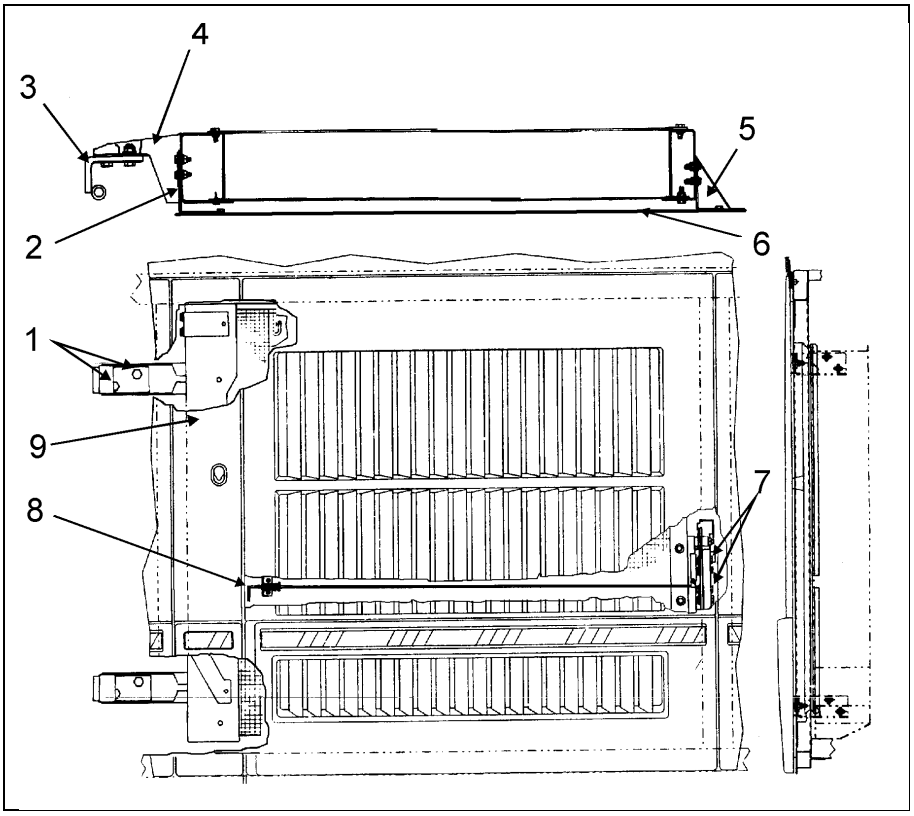

FIGURE 32: A/C CONDENSER COMPARTMENT 18192

13.2 Latch Mechanism

To adjust the latch mechanism, open the door to access the screws holding the latch mechanism to the door panel. Loosen the screws (7, Fig. 32) and move the latch assembly as needed. Tighten the screws (7, Fig. 32). Check door fit and operation.

14. FUEL FILLER DOOR

14.1 Door / Hinge

1. Open the fuel filler door (1, Fig. 33).
2. Loosen the screws (3, Fig. 33) holding the panel to hinge (2, Fig. 33) assembly. Adjust the fuel filler door position according to distance required between exterior finishing parts (Fig. 18), Tighten the nuts.
3. Check that the door swings freely and closes properly. It may be necessary to adjust the door latch to get proper fit and operation.

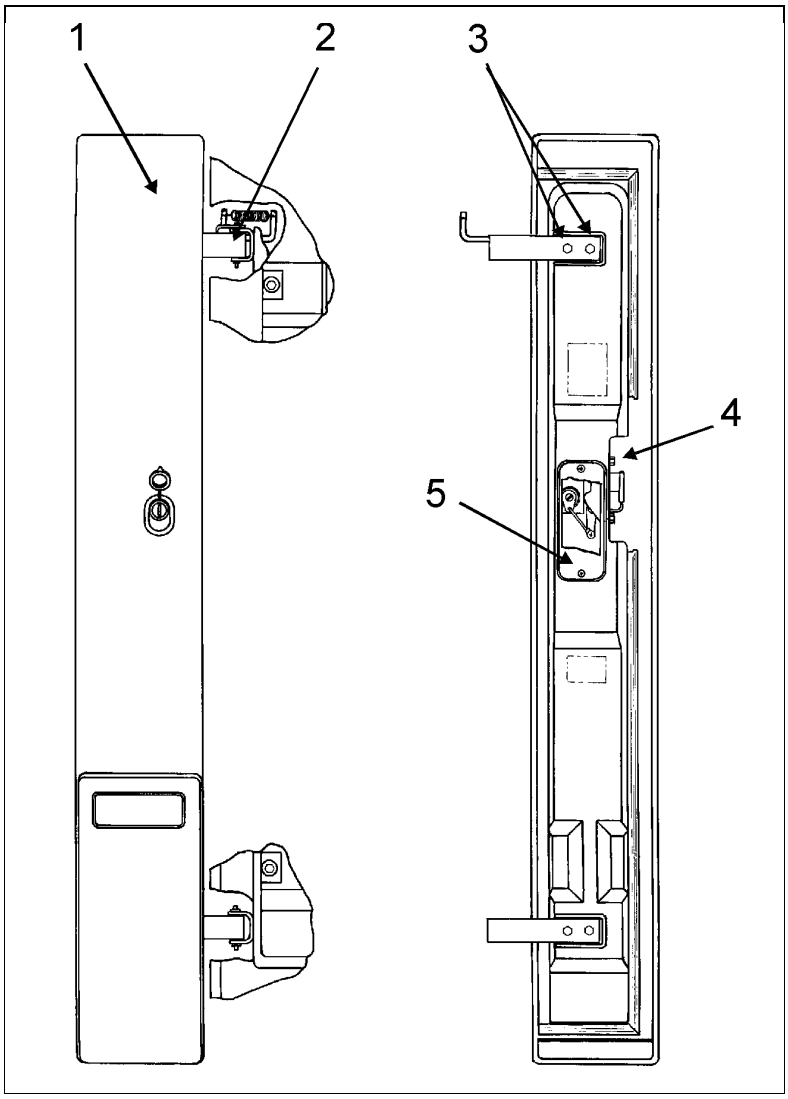

FIGURE 33: FULL FILLER DOOR 18193

14.2 Latch Mechanism

To adjust the latch mechanism, open the door to access the screws holding the latch mechanism to the door panel. Loosen the screws (4, Fig. 33) and move the latch assembly as needed. Tighten the screws. Check door fit and operation.

Access to latch mechanism may be obtained by removing the closing plate (5, Fig. 33).

15. FRONT SERVICE COMPARTMENT

15.1 Door / Hinge

1. Open the door.
2. Loosen nut (2, Fig. 34). Move part (1, Fig. 34) as shown in figure. Tighten nut (2, Fig. 34).
3. Loosen nut (3, Fig. 34). Hinge allows the door to be shifted "IN or OUT" and "LEFT or RIGHT". Adjust the door in accordance with the required distance between exterior finishing parts (Fig. 18). Only if necessary, use the adjustment allows by part (1, Fig. 34).
4. Loosen screws (5, Fig. 35). Screws (5, Fig. 35) allows the door to be shifted "UP or DOWN". Adjust the door position according to the distance required between exterior finishing parts (Fig. 18). Tighten the screws.
5. Check that the door swings freely and closes properly. It may be necessary to adjust the door latch to get proper fit and operation.

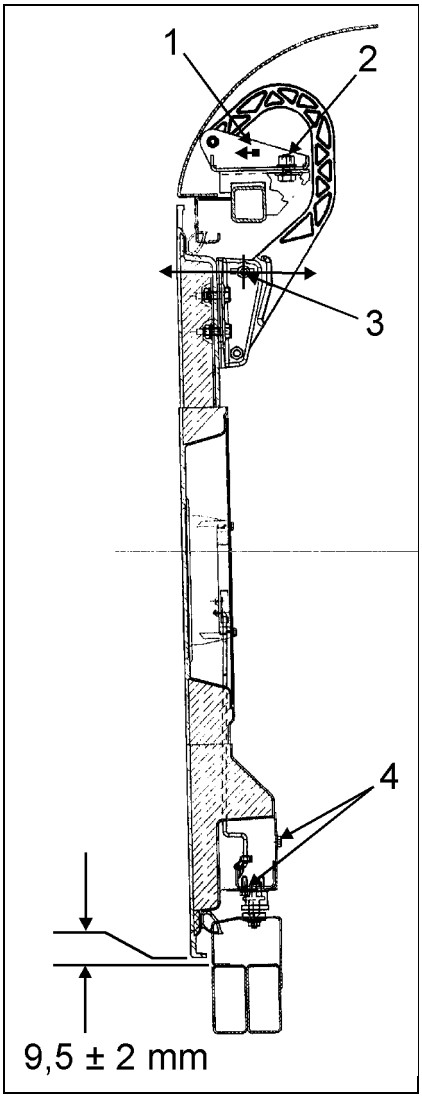

FIGURE 34: FRONT SERVICE COMPARTMENT 18194

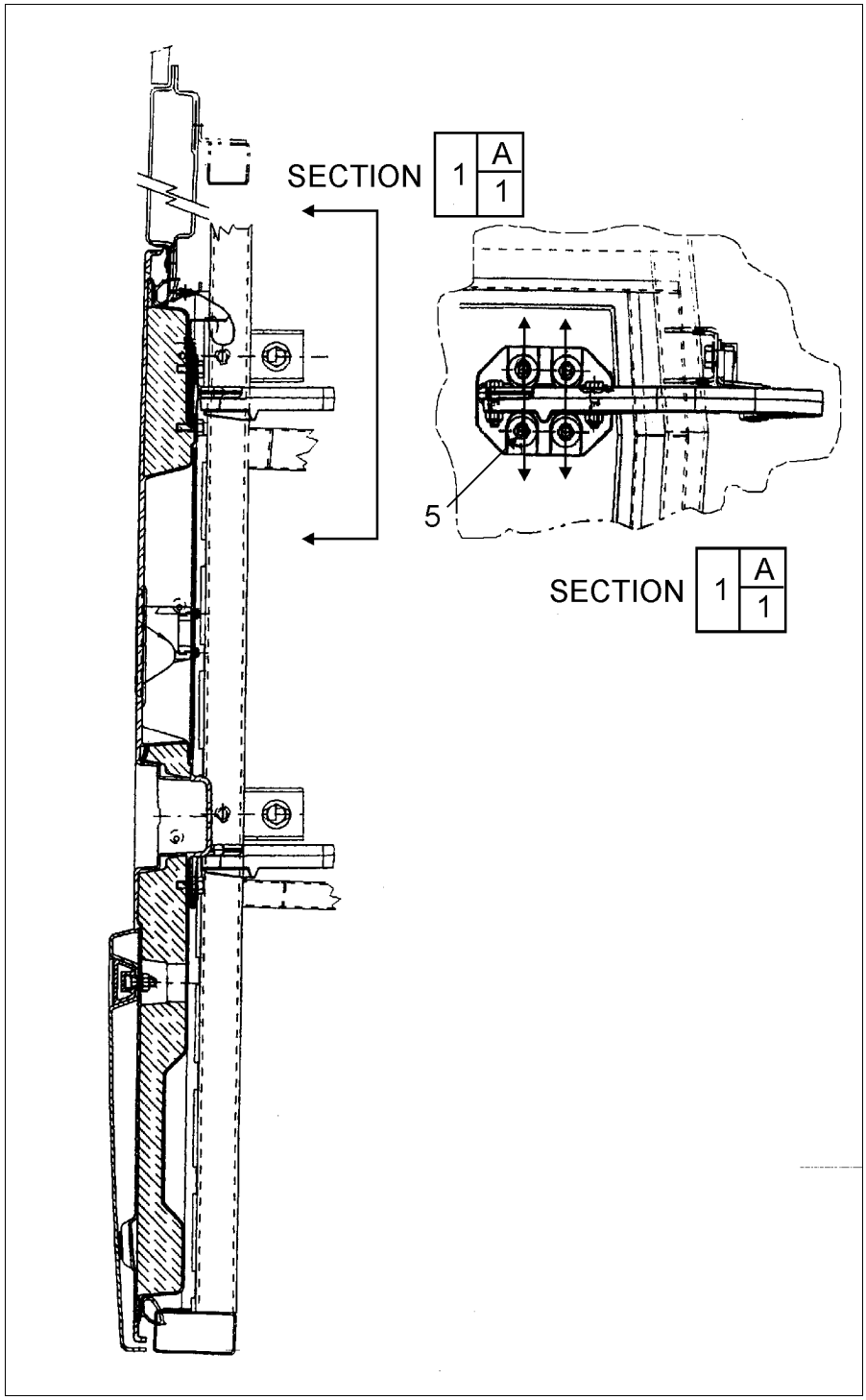

FIGURE 35: FRONT SERVICE COMPARTMENT 18195

15.2 Latch Mechanism

To adjust the latch mechanism, open the door to access the screws holding the latch mechanism to the door panel. Loosen the screws (4, Fig. 34) and move the latch assembly as needed. Tighten the screws. Check door fit and operation.

16. ENGINE COMPARTMENT REAR R.H. SIDE DOOR

16.1 Door / Hinge

1. Open the door.
2. Loosen nut (1, Fig. 36). Move part (3, Fig. 36) as shown in figure. Tighten nut (1, Fig. 36).
3. Loosen nut (2, Fig. 36). Hinge allows the door to be shifted "IN or OUT" and "LEFT or RIGHT". Adjust the door in accordance with the required distance between exterior finishing parts (Fig. 18).
4. Loosen the screws (4, Fig. 37). Screws allows the door to be shifted "UP or DOWN. Adjust the door position according to the distance required between exterior finishing parts (Fig. 18). Tighten the screws.
5. Check that the door swings freely and closes properly. It may be necessary to adjust the door latch to get proper fit and operation.

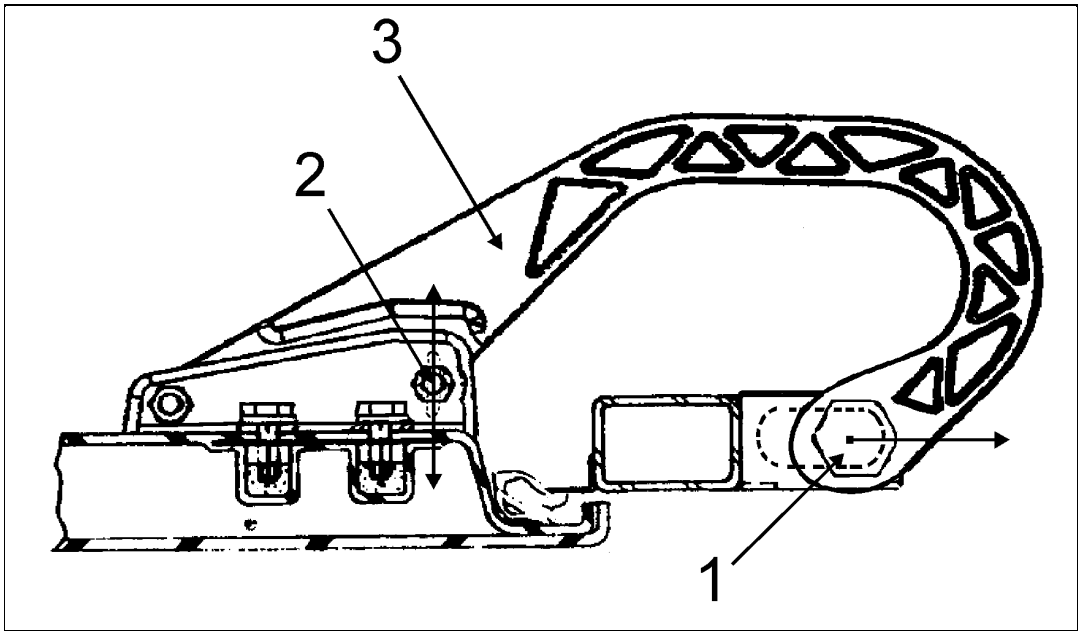

FIGURE 36: ENGINE COMPARTMENT REAR R.H. SIDE DOOR 18196

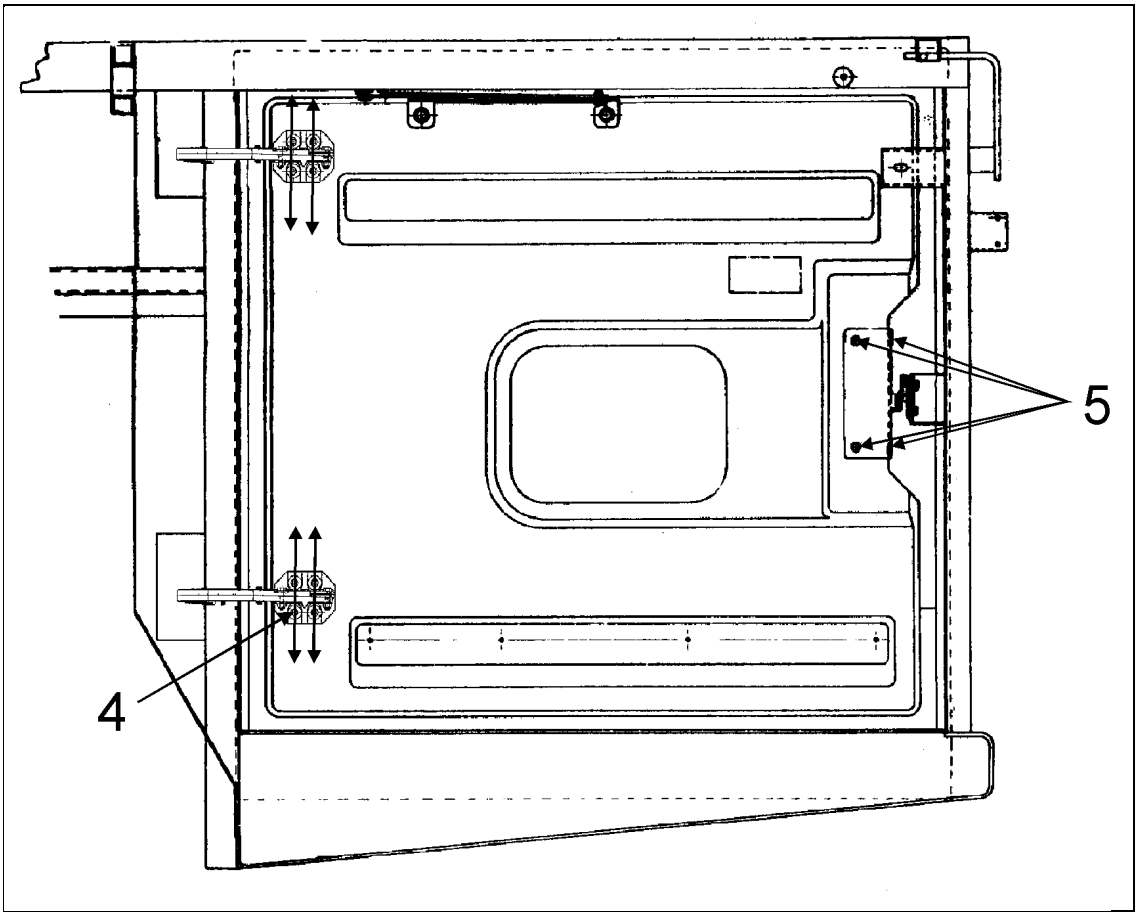

FIGURE 37: ENGINE COMPARTMENT REAR R.H. SIDE DOOR 18197

16.2 Latch Mechanism

To adjust the latch mechanism, open the door to access the screws holding the latch mechanism to the door panel. Loosen the screws (5, Fig. 37) and move the latch assembly as needed. Tighten the screws. Check door fit and operation.

17. EVAPORATOR DOOR

17.1 Door / Hinge

1. Open the door.
2. Loosen nut (1, Fig. 38). Move the hinge as shown in figure. Tighten nut (1, Fig. 38).
3. Loosen nut (2, Fig.38). Hinge allows the door to be shifted "IN or OUT" and "LEFT or RIGHT". Adjust the door in accordance with the required distance between exterior finition parts (Fig. 18).
4. Loosen the screws (3, Fig. 38). Screws allows the door to be shifted "UP or DOWN. Adjust the door position according to the distance needed between exterior finishing parts (Fig. 18). Tighten the screws.
5. Check that the door swings freely and closes properly. It may be necessary to adjust the door latch to get proper fit and operation.

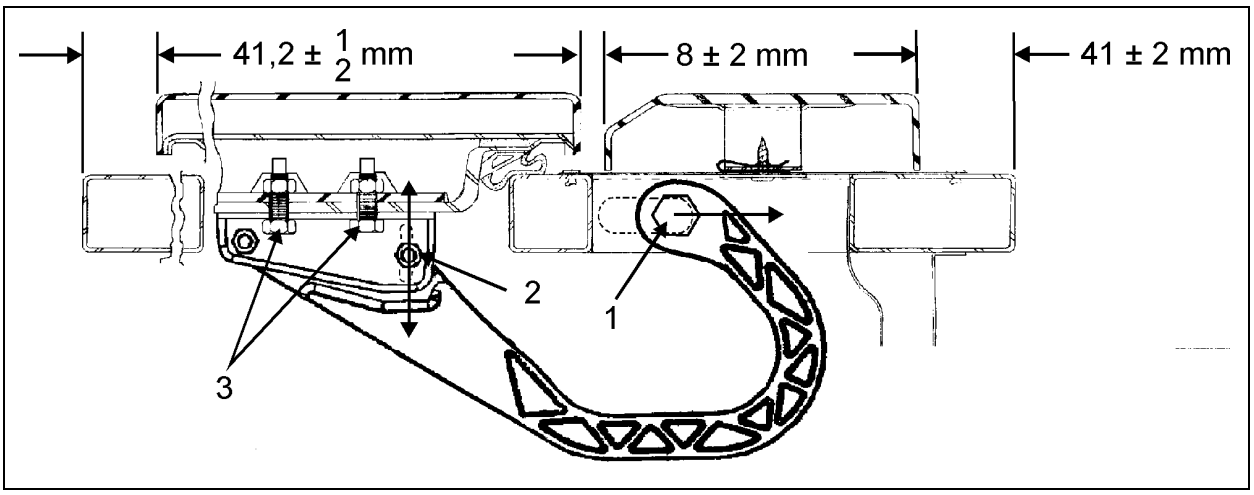

FIGURE 38 : EVAPORATOR DOOR 18198

17.2 Latch Mechanism

To adjust the latch mechanism, open the door to access the screws holding the latch mechanism to the door panel. Loosen the screws and move the latch assembly as needed. Tighten the screws. Check door fit and operation.

18. MAIN POWER COMPARTMENT AND REAR ELECTRICAL COMPARTMENT

18.1 Door / Hinge

1. Open the door.
2. Loosen nut (1, Fig. 39). Move the hinge as shown in figure. Tighten nut (1, Fig. 39).
3. Loosen nut (4, Fig. 39). Hinge allows the door to be shifted "IN or OUT" and "LEFT or RIGHT". Adjust the door Iin accordance with the required distance between exterior finition parts (Fig. 18).
4. Loosen the screws (2, Fig. 39). Screws allows the door to be shifted "UP or DOWN. Adjust the door position according to the distance needed between exterior finishing parts (Fig. 18). Tighten the screws.
5. Check that the door swings freely and closes properly. It may be necessary to adjust the door latch to get proper fit and operation.

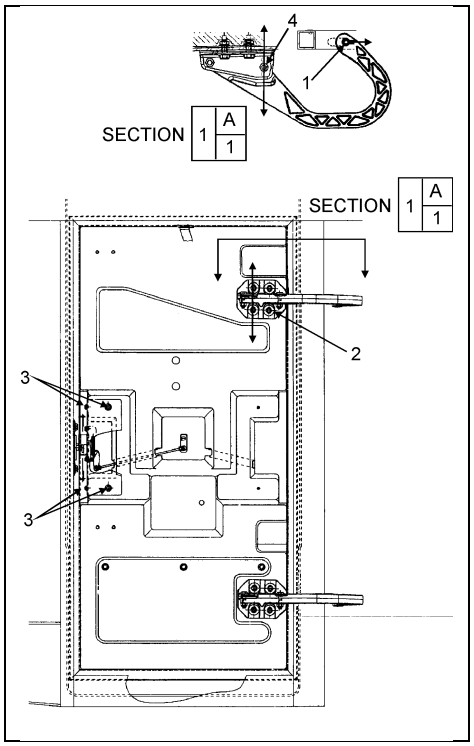

FIGURE 39: MAIN POWER COMPARTMENT AND REAR ELECTRIC COMPARTMENT

18.2 Latch Mechanism

To adjust the latch mechanism, open the door to access the screws holding the latch mechanism to the door panel. Loosen the screws (3, Fig. 39) and move the latch assembly as needed. Tighten the screws. Check door fit and operation.

19. FRONT ELECTRICAL COMPARTMENT

19.1 Door / Hinge

1. Open the door.
2. Loosen nut (1, Fig. 40). Pull on pressure cylinder (3, Fig. 40) and tighten the nut (1, Fig. 40).
3. Loosen nut (4, Fig. 40). Pull arm (5, Fig. 40) out of the vehicle and tighten the nut (4, Fig. 40).
4. Loosen nut (7, Fig. 40). Adjust arm (5, Fig. 40) in the slot. Position the door parallel to vehicle exterior side panel .
5. If necessary center the door panel with the four screws located behind panel.

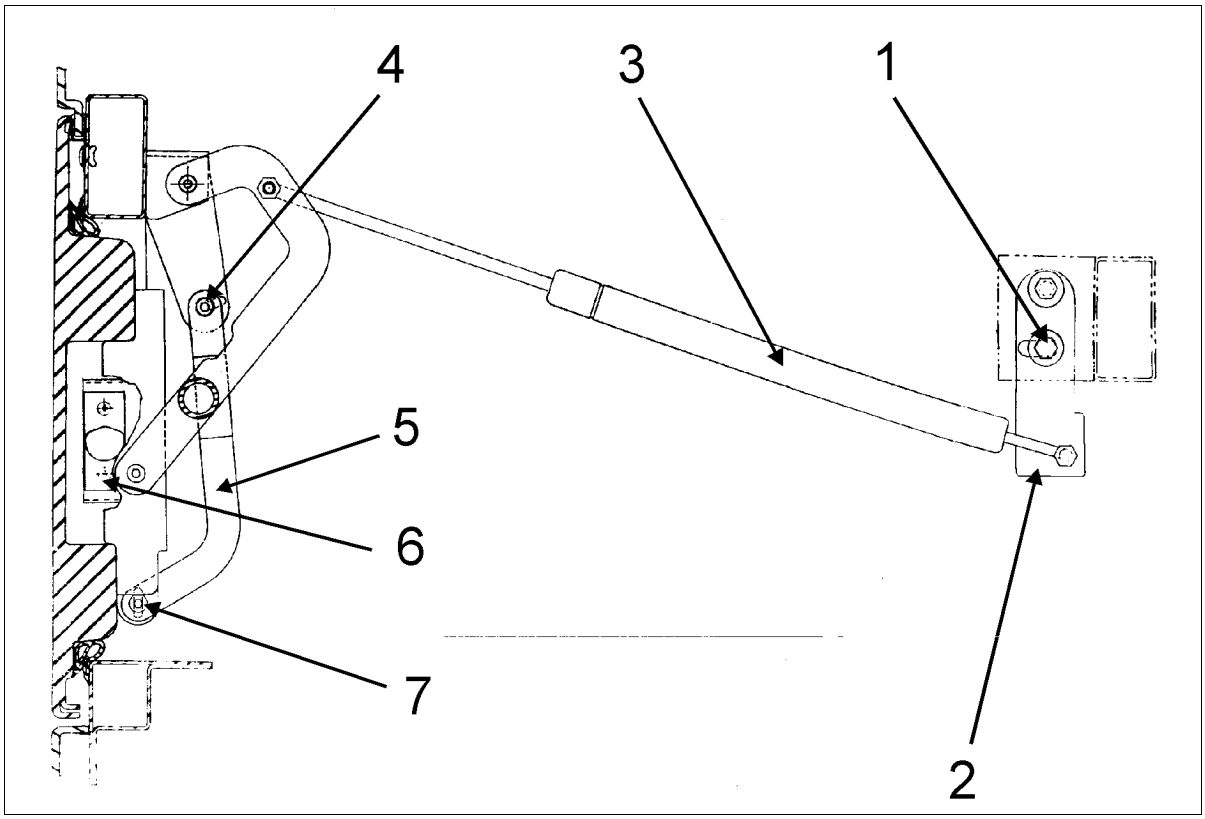

FIGURE 40: FRONT ELECTRICAL COMPARTMENT 18200

19.2 Latch Mechanism

To adjust the latch mechanism, open the door to access the screws holding the latch mechanism to the door panel. Loosen the screws (6, Fig. 40) and move the latch assembly as needed. If necessary remove the screws and add shims. Tighten the screws. Check door fit and operation.

20. EXTERNAL REAR VIEW MIRRORS (RAMCO)

Your vehicle is equipped with two (2) exterior mirrors (Ramco or Spartan) that may be supplied with an optional electric heating system which serves to minimize ice and condensation in extreme weather conditions. Integral thermostats are installed in both mirrors to avoid continual heating. Use the appropriate switch on the L.H. side control panel to activate the defroster system on both mirrors simultaneously. The mirrors can easily be adjusted by using the remote controls located on L.H. side control panel. The mirrors have replaceable glass which can be replaced if broken. Remote motors can be replaced.

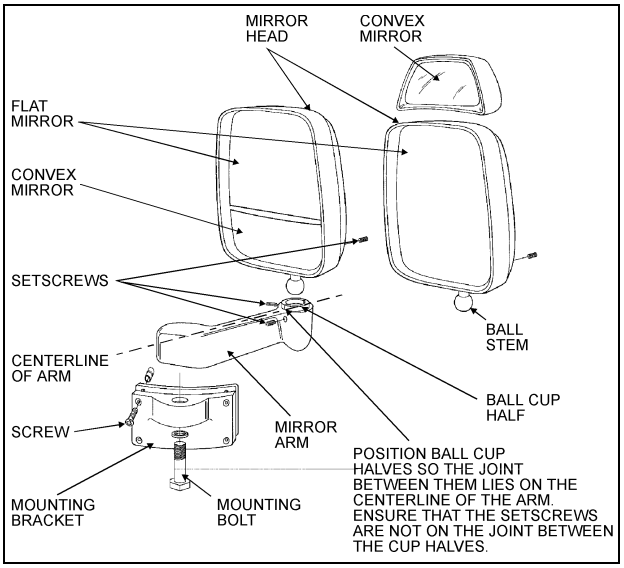

FIGURE 41: RAMCO MIRROR 18201

20.1 Adjustment

1. At the base of the mirror arm, loosen the mounting bolt to swing arm in or out.
2. To pivot the mirror head, loosen the setscrews on each side of the ball stub at the base of the mirror head to facilitate the adjustment.

20.2 Disassembly

1. At end of mirror arm, loosen the setscrews to relieve tension on the ball stem. Remove the ball stem from the arm.
2. Remove the four screws fastening the mirror arm base to the coach.

20.3 Assembly

1. Mount the mirror arm base to the coach.
2. Insert the ball stem into the mirror arm and tighten the socket setscrews.

Note: *Position the ball cup halves so the joint between them lies on the centerline of the arm. Ensure that the setscrews are not on the joint between the cup halves.*

20.4 Replacement Of Mirror Glass

1. Remove the broken glass.
2. Position new glass in mirror head and press to lock the Velcro in place.

20.5 Heated / Remote Controlled External Rear View Mirrors

Heated/remote controlled external rear view mirrors may be provided to prevent the mirrors from frosting up in cold weather.

The remote controlled external rear view mirrors attach to support arms using a pivot collar secured by setscrews. Loosening the setscrews allows the whole head assembly to turn on the support arm for initial adjustment. A mounting bolt and washer hold the arm support to the mounting bracket. The arm support can be moved to position the mirror head into or away from the coach body.

The mirror heat switch is located to the left of the driver on the L.H. Dashboard. This switch must be activated before the mirror heating element will energize. Once energized, the mirror heating element is kept at a sustained temperature by a thermostat. Refer to wiring diagram annexed in the technical publication box.

The remote control switch for the mirrors is mounted on the L.H. side control panel. The harness to the mirror head runs through the arm support. The remote motor is mounted to the mirror head behind the mirror glass.

20.5.1 L.H. & R.H. OUTSIDE MIRROR CONTROL

Turn pointer knob to the left for mirror head adjustments and to the right for convex mirror adjustment, then push down on either of the button's (4) sides to adjust the selected mirror viewing angle.

20.5.2 Disassembly

At end of mirror arm, loosen the setscrews to relieve tension on the ball stud. Remove the ball stud. Remove the ball stud from the arm and gently pull the harness out until the connector is exposed.

Remove the four screws fastening the mirror arm base to the coach. Slide the harness free of the mirror arm base.

20.5.3 Assembly

1. Attach a stiff wire (snake) to the end of the harness and insert the wire through the mirror arm base and arm, gently pull the harness through the arm and disconnect the "snake".
2. Connect the mirror head harness. Insert the harness connector back into the mirror arm.
3. Insert the ball stud into the mirror arm and tighten the socket setscrews.

Note: *Position the ball cup halves so the joint between them lies on the centerline of the arm. Ensure that the setscrews are not on the joint between the cup halves.*

20.5.4 Flat Glass

The mirror heater grid mounts on the plate and the plate is glued to the back of the mirror glass. After the mirror heater switch is depressed, current flows to the heater grid to warm the plate and mirror glass. A thermostat keeps the mirror temperature between 60-80ºF.

20.5.5 Convex & Flat Mirror Replacement

The mirror glass assembly is mounted to the control mechanism or to mirror base with Velcro strips. Remove the mirror glass by gently pulling the lens to release the Velcro. Disconnect the heater grid at the two connectors.

Connect the connectors of the new mirror's grid to the harness. Install the lens by positioning the lens in the mirror frame and pressing to lock the Velcro in place.

20. EXTERNAL REAR VIEW MIRRORS (SPARTAN)

The coach is equipped with flat-type and convex-type rear view mirrors. Convex mirrors give a wide angle view. Objects viewed in convex-type rear view mirrors appear smaller and are actually closer than they appear.

To provide good visibility in cold weather, the mirrors are equipped with heating elements that are activated by a rocker switch located on the L.H. dashboard. Thermostats are used to prevent continuous operation of the heating elements.

Caution: *Do not attach stick-on type convex mirror accessories to the heated mirror glass. This could impede uniform heat distribution on the mirror surface which could break the mirror.*

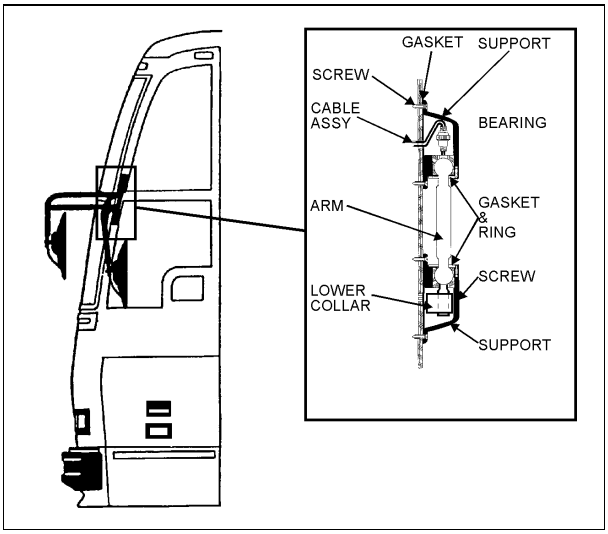

FIGURE 42: SPARTAN MIRROR 18202

21.1 Adjustment

Adjust the side view mirrors until the side of the coach is visible. Adjust the flat-type mirror until the highway is in full view.

21.2 Manually Adjusted Mirror

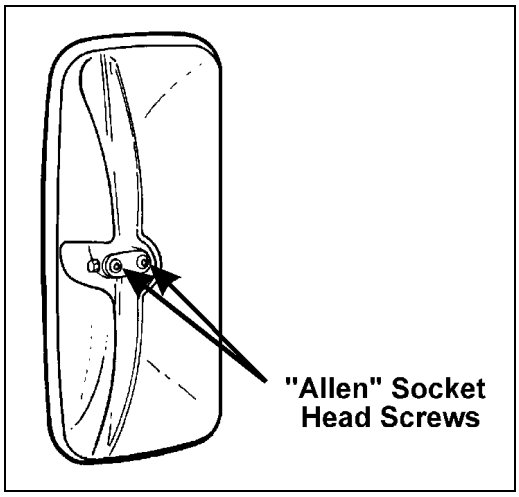

FIGURE 43: MIRRORS ADJUSTMENT SCREWS OEH3B120

HORIZONTAL BRACKET ASSY ADJUSTMENT:
Loosen the Allen screw at the bracket assy ball joint. Adjust the bracket assy to the desired angle, then tighten the screw (Fig. 42).

HORIZONTAL AND VERTICAL MIRROR ADJUSTMENT:
Loosen the two Allen screws at the rear of the mirror body. Adjust the mirror to the desired angle, then tighten the screws (Fig. 43).

Caution: *Do not overtighten the screws. Tighten until snug.*

21.3 Electrically Adjusted Mirror

Electrically adjusted mirrors are adjusted by the outside mirror control located on the L.H. side control panel. Select the mirror to be adjusted by turning the pointer knob to the left or right. Adjust the mirror to the desired position by moving the knob.

Manual adjustment is also possible. Grip the mirror body and adjust to the desired angle.

Note: *To adjust mirror horizontally, loosen two Allen screws at the rear of the mirror body. Adjust the mirror to the desired angle, then tighten screws.*

21.4 Replacement Of Mirror Glass

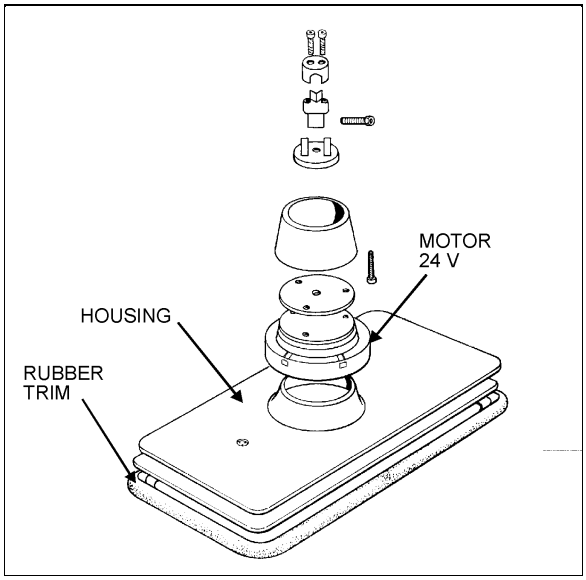

FIGURE 44: SPARTAN MIRROR 18203

1. Remove the rubber trim (Fig. 44).
2. Remove the broken glass.
3. Position new glass in mirror head and install the rubber trim.

22. COACH SIDE WINDOWS

Six passenger side windows are provided on each side of the coach on H3-41, while the H3-45 have seven on each side. They are made of fixed, single or double-glazed, heat absorbing AS-3 mounted in black painted extruded aluminum frames. The single-glazed windows are laminated safety glass, while the double-glazed windows are laminated safety glass outside and tempered glass inside. The two trapezoidal windows are also mounted on aluminum frames (except for H3-45 VIP, where they're mounted with adhesive, refer to heading *"Adhesive mounted windows"* later in this section, for more information on this type of mounting) and they are made of fixed, double glazed, heat absorbing AS-3 laminated safety glass inside and tempered glass outside. Three of the side windows on each side serve as emergency exits on the H3-41, while there are four of them on curb side of the H3-45, and three on driver's side. See figures 45 and 46.

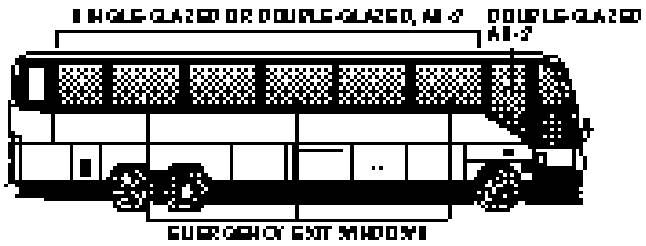

FIGURE 45: COACH SIDE WINDOWS (H3-41) 18073

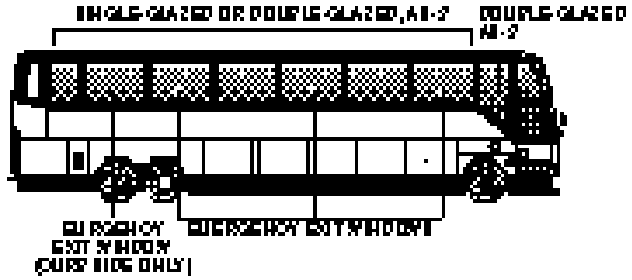

FIGURE 46: COACH SIDE WINDOWS (H3-45) 18074

An emergency exit window can be opened by pulling the lower part of the release bar, which disengages the 2 safety latches, and pushing out the window frame. See figure 47.

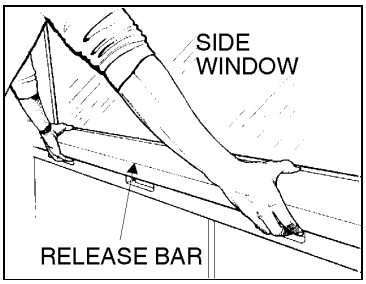

18075

FIGURE 47: EMERGENCY EXIT WINDOW

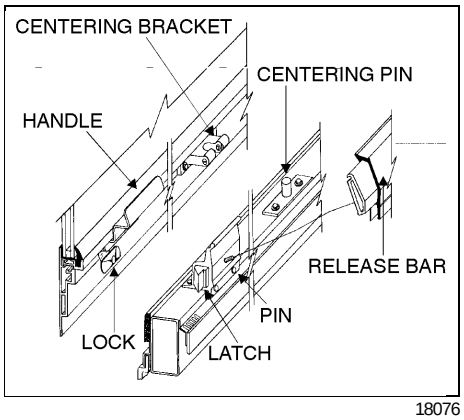

18076

FIGURE 48: EMERGENCY EXIT WINDOW

Emergency operating instruction decals are affixed under each emergency exit window. To close the window, pull the 2 handles on the window frame to securely engage the safety latches in their respective locks. See figure 48.

22.1 Removal and Installation

The emergency exit windows can be removed from the vehicle with the help of an assistant. See figure 49.

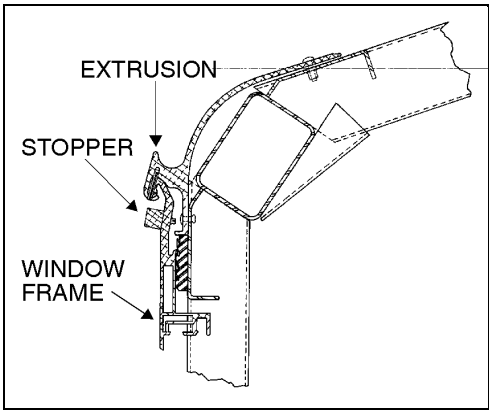

FIGURE 49: EMERGENCY EXIT WINDOW 18077

1. Remove the 2 stoppers from the window frame outside the vehicle.
2. Unlock the window latches and swing the window out far enough to disengage the frame extrusions.
3. Lower the window assembly from the opening.
4. Installation of the window is the reverse of removal procedure.

The fixed side windows can be removed in the same way, after first removing 4 cap screws holding the bottom of the window frame to the inside wall of the vehicle. This will permit the window to swing out as an emergency exit window.

Spring pins are inserted in the roof aluminum extrusion on both sides of each window to prevent fore and aft movement of the window when opened. The spring pins do not have to be removed when removing and installing a window.

22.2 Emergency Exit Window Adjustment

Emergency exit windows should be checked periodically for easy opening and closing. Pulling the lower part of the release bar with both hands placed near the safety latches should disengage both locks on the window simultaneously. The tension required to release the window should not exceed 20 pounds (9 kg) of force. If too much effort is required to disengage the locks or if only one lock disengages when pulling the release bar, adjustment of the window locking mechanism must be made. Similarly, the window should close tightly and should not shake.

The centering pin and the centering bracket should be correctly positioned before performing the window locking mechanism adjustment. The window is correctly positioned in the opening when the centering pin aligns with the slot in the centering bracket. The 2 locks threa-ded in the window frame can be adjusted in or out for proper engagement in the safetlatches. If the locks do not engage in the latches or require too much effort, they are threaded in too far. If the window rattles when closed, the locks extend too far out. To adjust the locks, first loosen the lock nuts and rotate the locks in or out in half-turn increments. Tighten the lock nuts when proper adjustment is made.

Note: *Tangs on the lock must be in a horizontal position.*

23. ADHESIVE MOUNTED WINDOWS

The adhesive mounted windows are fixed, single or double-glazed, heat absorbing AS-2 or AS-3 glass mounted in their opening with polyurethane windshield adhesive. The single-glazed windows are laminated safety glass, while the double-glazed windows are laminated safety glass outside, and tempered glass inside. The upper driver's windows can optionally be AS-4 Plexiglas. See figure 50 for location and type of sealed windows. To replace a damaged or broken adhesive mounted window, refer to heading *"Replacement"*, next in this section.



FIGURE 50: ADHESIVE MOUNTED WINDOWS 18078

23.1 Replacement

Items Needed:

Scraper with new blade; Disposable vinyl gloves; Isopropyl alcohol or enamel reducer or NAPA 6383 surface cleaner; Masking tape; Clean rag; Heavy hydrotreated naphta (vanishing oil) (680102); Tremthane Primer (681091); Tremshield Tape (681089); Sikaflex 255FC (681092)

Warning: *Wear disposable vinyl gloves during the procedure. Do not smoke. Dispose of unused toxic material properly. Heed all warnings on containers of the different products.*

1. Remove previous window glass and scrape off all remaining material around the opening.

Note: *Hardened adhesive will not remove easily. A new blade works best to remove all adhesive residue using care not to damage the fiber structure.*

2. Place the new window glass in the opening and centre it to leave an even gap top and bottom, and from side to side.

Note: *Use small shims to raise the glass in proper position. Shims can be cut from the tremshield tape. See figure 51.*

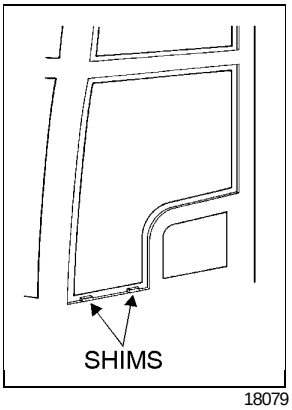

FIGURE 51: ADHESIVE MOUNTED WINDOWS

3. Hold the window glass centered and have an assistant mark the inside contour of the opening on the glass with a china pencil. Remove glass and place it on a table with the pencil mark facing up.
4. Place masking tape on the inside surface of the glass to just cover the china pencil mark, leaving the outer surface exposed for the adhesive. This will make cleanup much easier. For ease of removal, do not overlap the tape at corners. See figure 52.

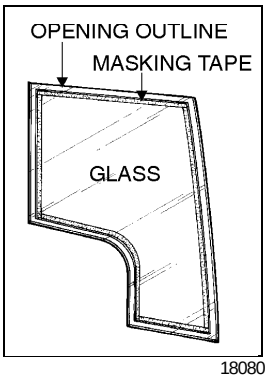

FIGURE 52: ADHESIVE MOUNTED WINDOWS

5. Clean all around the window opening and the window glass edge with isopropyl alcohol, enamel reducer or NAPA 6383 surface cleaner. Let dry 1 to 2 minutes.

Note: *There must be absolutely no silicone on glass or channel or Sikaflex 255 FC will not stick.*

6. Put masking tape on the inner and outer contour of the window opening on the structure, approximately 1/16" (1,5 mm) from the edges of the contour.
7. Apply Tremthane primer (Prévost # 681091) all around the window opening and the window glass edge.
8. Install Tremshield tape (Prévost # 681089) around the sealing surface of the window opening. See figure 53.

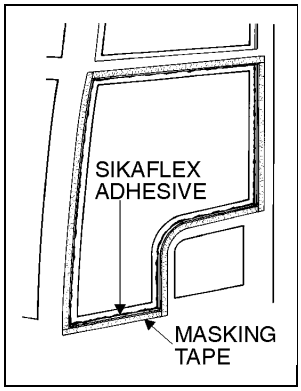

FIGURE 53: ADHESIVE MOUNTED WINDOWS

9. Apply a generous bead of Sikaflex-255 FC polyurethane adhesive (681092) on the sealing surface around the window opening from outside the vehicle.

Note: *To ease applying of Sikaflex 255 FC, it may be heated to 175 °F (80 °C).*

Note: *Bead should touch the side surface of the window opening.*

10. Place shims correctly, and position window glass in the opening. Press firmly and evenly. Excess adhesive should flow out from behind glass.

Note: *Add adhesive in areas where overflow is minimal or if air bubbles are present.*

11. Smooth the adhesive joint using the plastic glove on your finger. Remove excess material around both sides of the window as soon as possible before adhesive dries.

Note: *Remove most of the adhesive from the scraper or trowel with a rag, and then dip tool in heavy hydrotreated naphta (vanishing oil) after each use for cleaning.*

Caution: *Never use solvent to clean excess adhesive.*

12. Remove masking tape at once, clamp window glass suitably and let dry overnight or at least 8 hours.

24. WINDSHIELD

The lower windshield is single-glazed, AS-1 laminated safety glass, while the upper windshield is single-glazed, AS-3 laminated safety glass. The upper windshield can be equipped, as optional equipment, with heating elements. Each windshield is laced to a flange around an opening in the front structure by means of a one-piece black rubber extrusion and sealed with Sikaflex-255 FC polyurethane adhesive (Prévost # 681092). Proper installation of the windshield is necessary to ensure watertightness. Since glass varies in fit depending on the supplier, we recommend installing a replacement windshield obtained from Prévost Car Inc. to ensure proper fit. Windshield obtained from another source should be checked for proper size and curvature.

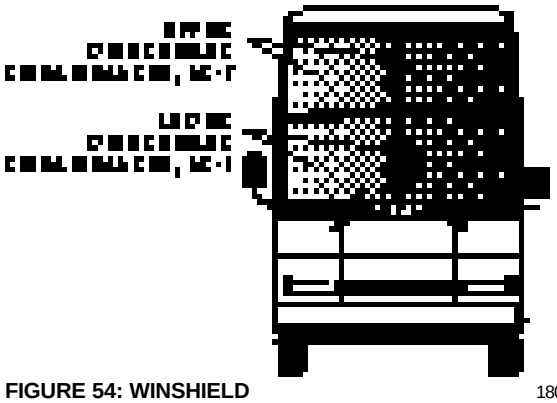

FIGURE 54: WINSHIELD 18082

24.1 Removal

Warning: *Windshield removal and installation must be performed by more than one person. To avoid personal injury, wear protective gloves when handling the windshield glass.*

1. Remove the wiper arms of the affected windshield.

Note: *Remove the destination sign when replacing the upper R.H. side windshield.*

2. Remove the rubber filler strip from the rubber extrusion around the windshield.
3. Run a blunt wood or plastic instrument inside channel of the rubber extrusion where the windshield is inserted, to loosen the windshield from the extrusion, from inside and outside the vehicle all around the windshield.
4. Pry out the windshield starting at a corner and pushing the windshield out. A person on the outside then lifts the windshield up and out of the opening.
5. Clean the rubber extrusion channel with isopropyl alcohol. Refer to heading *"Installation"* in this section for instructions on how to reinstall windshield.

Note: *If the rubber extrusion is damaged, remove and discard it, then clean the windshield opening with isopropyl alcohol. Refer to heading "Rubber Extrusion and Windshield Installation" in this section for complete reinstallation instructions.*

24.2 Installation

Warning: *Wear disposable vinyl gloves during the procedure. Do not smoke. Dispose of unused toxic material properly. Heed all warnings on containers of the different products used in this procedure.*

1. Clean the rubber extrusion with wiping towels soaked with isopropyl alcohol. Wipe with dry wiping towels and let dry 1 to 2 minutes. See figure 55.

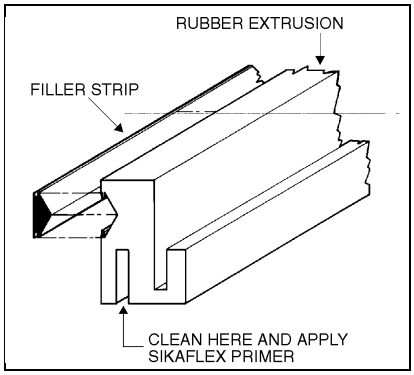

FIGURE 55: WINSHIELD 18098

Note: *Force the soaked towels in the channels for good cleaning in these critical areas.*

2. Apply Sikaflex primer 449/203 (Prévost # 681091) with a paint brush or applicator in the channels around the rubber extrusion, and let dry 20 to 25 minutes while proceeding with the next steps.

Caution: *If more than 8 hours elapse before proceeding with the installation, repeat step 3.*

3. Spray the windshield channel of the rubber extrusion with a liquid soap and water solution.
4. Install the windshield in the rubber extrusion, bottom first, and working up the sides to the top using a thin and rounded wooden or plastic piece to force the windshield in its channel. End the installation at one of the upper corners.

Note: *Two persons should be working on both faces of the windshield simultaneously.*

5. Mask the windshield following the contour of the rubber extrusion. See figure 56.

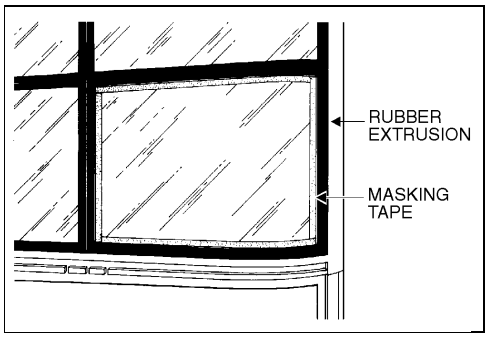

FIGURE 56: WINSHIELD 18099

6. Apply Sikaflex-255 FC polyurethane adhesive (Prévost # 681092) generously between windshield and the rubber extrusion, while inserting the tip of the adhesive tube deep in the channel. Scrape excess adhesive from windshield and clean with Klene-Sol or equivalent solvent.
7. Spray V-channel in the rubber extrusion with a liquid soap and water solution, and install filler strips in the rubber extrusion, cutting each end at a 45° angle.

Note: *Filler strips retract with time. Install ends of filler strips as tight as possible in the V-channel.*

8. Remove all masking tape and clean all areas properly. Reinstall windshield wiper and destination sign if applicable.
9. Let dry overnight, or at least 8 hours, before putting vehicle back into service.

24.3 Rubber Extrusion and Windshield Installation

Warning: *Wear disposable vinyl gloves during the procedure. Do not smoke. Dispose of unused toxic material properly. Heed all warnings on containers of the different products used in this procedure.*

Caution: *The black rubber extrusion securing the windshield in the opening fits correctly in only one position. Find the correct position of the rubber extrusion now, and make reference marks with a china marker to avoid searching for the correct position later in the procedure.*

1. Clean the windshield opening sealing surfaces with isopropyl alcohol and let dry 1 to 2 minutes. See figure 57.

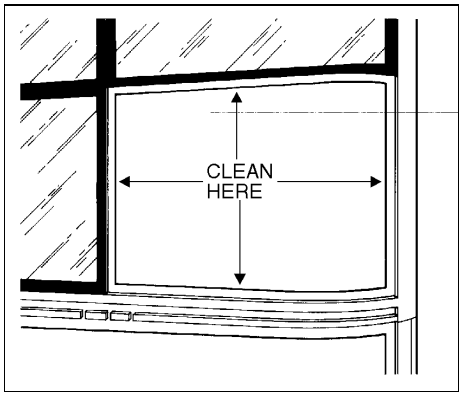

FIGURE 57: WINSHIELD 18100

2. Clean the rubber extrusion with wiping towels soaked with isopropyl alcohol. Wipe with dry wiping towels and let dry 1 to 2 minutes.

Note: *Force the soaked towels in the channels for good cleaning in these critical areas.*

3. Apply Sikaflex primer 449/203 (Prévost # 681091) with a paint brush or applicator in the channels around the rubber extrusion, and let dry 20 to 25 minutes while proceeding with the next steps. See figure 58.

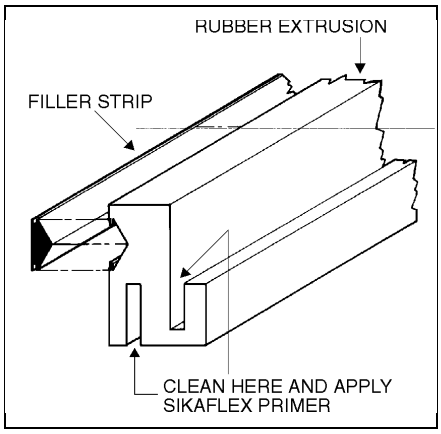

FIGURE 58: WINSHIELD 18101

Caution: *If more than 8 hours elapse before proceeding with the installation, repeat step 3.*

4. Mask the interior side of the windshield opening or apply a coat of petroleum jelly such as Vaseline to aid in removal of adhesive overflow after the installation.
5. Mask the exterior side of the windshield opening on the 2 sides not adjacent to the other windshield.
6. Apply 2 beads, parallel but not touching, of Sikaflex-255 FC polyurethane adhesive (Prévost # 681092) on the sealing surface of the windshield opening. See figure 59.

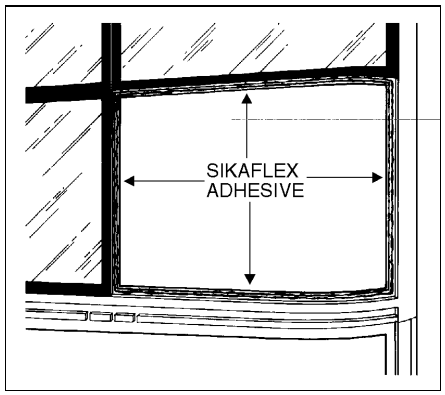

FIGURE 59: WINSHIELD 18102

7. Apply Sikaflex-255 FC adhesive all around the rubber extrusion in the channel for the windshield opening flange. See figure 60.

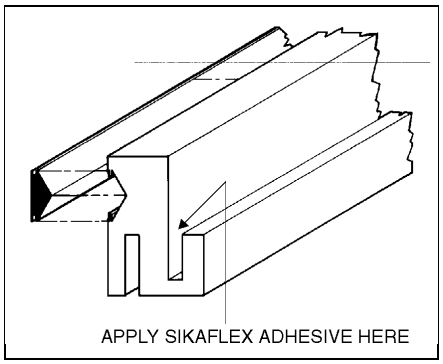

FIGURE 60: WINSHIELD 18103

Caution: *Sikaflex adhesive hardens quickly. Continue installation immediately after application of adhesive is completed.*

8. Find the reference marks made earlier and install the rubber extrusion in the windshield opening.
9. Spray the windshield channel of the rubber extrusion with a liquid soap and water solution.
10. Install the windshield in the rubber extrusion, bottom first and working up the sides to the top, using a thin and rounded wooden or plastic piece to force the windshield in its channel. End the installation at one of the upper corners.

Note: *Two persons should be working on both faces of the windshield simultaneously.*

11. Mask the outside of the windshield following the contour of the rubber extrusion.
12. Apply Sikaflex-255 FC adhesive generously between windshield and the rubber extrusion, while inserting the tip of the adhesive tube deep in the channel. Scrape off excess adhesive from windshield and clean with Klene-Sol or equivalent solvent.
13. Spray V-channel in the rubber extrusion with a liquid soap and water solution, and install filler strips in the rubber extrusion, cutting each end at a 45° angle.

Note: *Filler strips retract with time. Install ends of filler strips as tight as possible in the V-channel.*

14. Add Sikaflex-255 FC adhesive where the rubber extrusion meets the front structure fiber on the 2 sides not adjacent to the other windshield. Scrape off excess adhesive and clean with Klene-Sol or equivalent solvent.

15. Remove all masking tape and clean all areas properly. Reinstall windshield wiper and destination sign if applicable.

16. Let dry overnight or at least 8 hours before putting vehicle back into service.

25. ROOF ESCAPE HATCH

25.1 Maintenance

The vehicle can be equipped with one or two escape hatches. The escape hatch is designed to provide years of reliable service with a minimum of maintenance. All components are rust proof, and moving parts are Teflon coated to eliminate need for lubrication. Should water infiltrate the vehicle from the escape hatch, refer to the heading *"Sealing"* in this section for procedures on how to seal this area.

Caution: *Use of lubricants, paints, or other coatings such as graffiti deterring sprays are not recommended.*

Suggested maintenance includes periodic inspection of attaching fasteners for evidence of loosening due to tampering, and regular cleaning with mild soap and water.

Although there are other cleaning solutions available, some contain solvents and other chemicals that can attack the high strength materials used in the production of the escape hatch.

Caution: *Ensure that cleaning solutions are compatible with the materials used on the escape hatch.*

Graffiti removing cleaners often contain acetone, ether, lacquer thinner, or other solvents known to destroy the high strength properties of many plastics. Use of these cleaners must be avoided.

Graffiti-resisting coatings often leave a sticky residue that interferes with smooth up/down movement of the hatch mechanism. Some of these coatings also contain solvents that will reduce the strength of certain components.

Caution: *Use of these coatings is at considerable risk and should be avoided.*

25.2 Repair

All components used in the production of the escape hatch are available as service parts, except for one hinge that represents a possible hazard when improperly reattached to a hidden tapping plate that is often damaged whenever the hinge is damaged. The tapping plate is permanently laminated between the inner and outer cover assemblies, and it cannot be inspected or replaced. It is therefore necessary to replace the entire assembly following damage to the hinge. See figure 61.

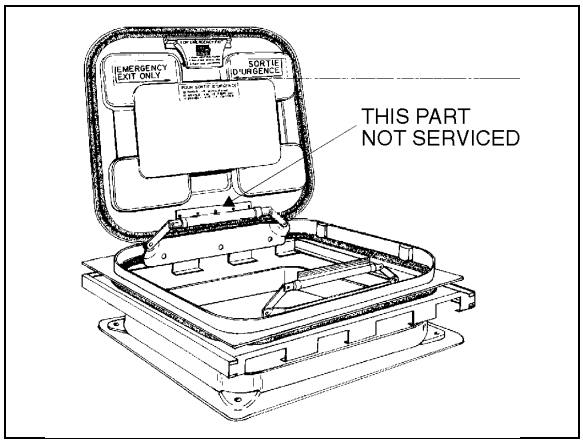

FIGURE 61: ROOF ESCAPE HATCH 18104

Caution: *Hinge assembly is critical and hinge should never be removed from cover assembly. Fasteners used in this assembly are special and have critical torque requirements and tamper-resistant heads to discourage tampering.*

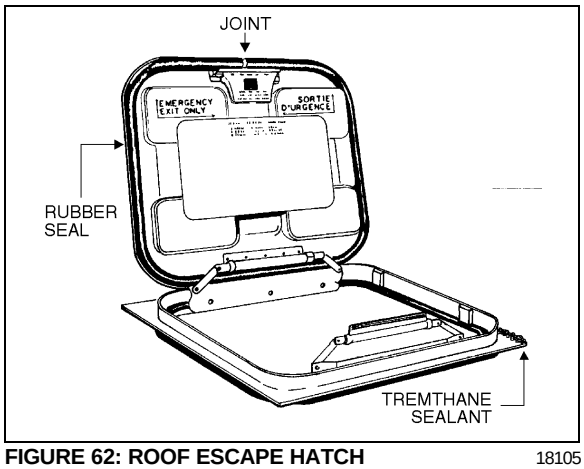

FIGURE 62: ROOF ESCAPE HATCH 18105

25.3 Sealing

1. Open and tilt up the escape hatch cover.
2. Join the 2 ends of the rubber seal.

Caution: *Seal joint should be toward rear of vehicle.*

3. Apply rubber adhesive CA-40 (Prévost # 681285) in the gap between the seal ends.
4. Apply Sikaflex 221 sealant (Prévost # 680532) along the outline of the escape hatch on the roof of vehicle.

25.4 Removal and Installation

The frame of the escape hatch is riveted to the roof of the vehicle. The escape hatch panel assembly can be replaced as a unit and a new panel assembly installed in the existing frame. To remove the panel assembly, remove the 4 bolts fastening the 2 hinges to the escape hatch frame and retain the 4 flat washers. Reinstall the panel assembly by fastening the 2 hinges with the 4 bolts and flat washers removed earlier.

Caution: *When installing, roof escape hatch's hinge must be toward the front of vehicle, to prevent the hatch from being ripped out if accidentally opened while vehicle is running.*

26. PASSENGER SEATS

The H3-41 and H3-45 coaches can be equipped with any of 3 basic seat models and installed in a variety of seating arrangements:

1. The *"Tourismo 2"* seat is the base model and is available in heights of 40" (102 cm) and 42" (107 cm). Seating arrangement includes 2 card tables which can be folded and removed, and pivoting seats ahead of each card table. Each pair of seats is built on a welded steel frame fastened to the side wall and on a track-mounted pedestal. Standard seating capacity is 48 in H3-41 and 56 in H3-45.
2. The *"Silhouette"* seat is an optional model with each pair also built on a welded steel frame and mounted the same way as the *"Tourismo 2"* seat. Standard seating arrangement with the *"Silhouette"* seat includes 2 card tables and 2 pivoting seats. Seating capacity is the same as with the *"Tourismo 2"* seat.
3. The *"VIP"* seat model is an optional seat. *"V.I.P"* seats are mounted on one row of paired seats built on a common frame on one side of the vehicle, and a row of single seats on the other side of the vehicle with an off-centre aisle. Each *"V.I.P."* seat has its own set of armrests.

Each seat has a removable bottom cushion with snapped-on upholstery for cleaning or replacement. The *"Tourismo 2"* and *"Silhouette"* seats have 3 armrests. The aisle armrest is spring loaded to return to its down position when released. The center armrest can be folded up and down manually, while the window armrest is fixed.

26.1 Rotating Seats

1. Remove 1 wing nut holding each seat bottom cushion from under the seat frame.
2. Lift front part of cushions and remove cushions.
3. Remove 4 wing screws fastening seat assembly to seat frame.
4. Pull seat toward aisle and rotate.
5. Align mounting holes and reinstall 4 wing screws.
6. Reinstall seat bottom cushions with wing nuts.

26.2 Removing Fixed Seats

Note: *Seats on one row are not interchangeable with seats of the other row.*

To remove fixed seats, proceed as follows:

1. Remove 1 elastic stop nut holding each seat bottom cushion from under the front part of the seat frame.
2. Lift front part of cushions and remove cushions.
3. Remove 4 finishing screws holding plastic cover between side wall and seat frame.
4. Remove 2 cap screws, nuts, and washers holding seat frame to side wall and retain the 2 holding brackets. See figure 63.

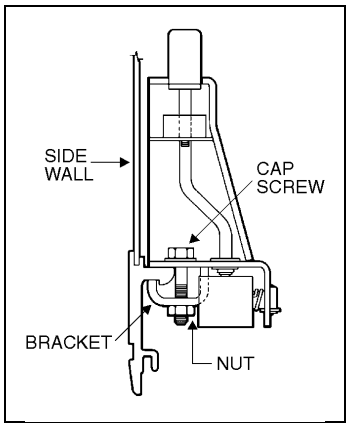

FIGURE 63: PASSENGER SEAT FRAME HOLDING

5. Remove 2 nuts and washers holding seat frame to pedestal rods. See figure 64.

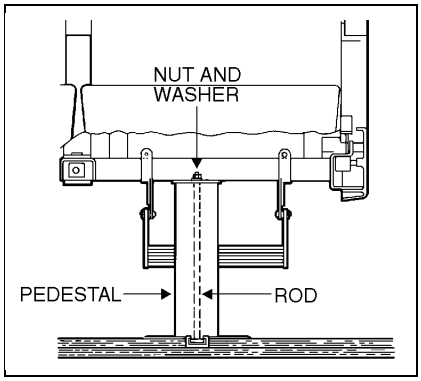

FIGURE 64: PASSENGER SEAT FRAME

Note: *Bottom end of rod is coated with Loctite and threaded in a steel block which slides in the floor track. Removal of rod is possible if loosened from block. Otherwise, slide rod and block assembly to the front end of track after removing all other interfering seats.*

6. Remove seat assembly.
7. Reverse the above procedure to install seat assembly.

Note: *On newer vehicles, the rod consists of a carriage bolt inserted in a square plate sliding in the floor track. Removal is possible only by the front end of track.*

27. UPHOLSTERY MAINTENANCE

27.1 Routine Cleaning

Coach seats are lightweight, with foam-padded backs and cushions. For both appearance and wearability, best results are obtained if upholstery is cleaned at regular intervals before dirt, dust and grit have been ground into the fabric. Seat fabric is made of 50% wool, 33% cotton, 9% nylon, and 8% acrylic.

All that is required to remove the dirt is a gentle beating with the hand or the back of a brush. This will bring the dirt to the surface where it is easily removed with a vacuum or brush in the direction of the pile which can easily be recognized by running a hand lightly over the pile. If the fabric become excessively dirty, particles of grit will cause gradual wear, reducing the life span of the fabric.

27.2 Dry Cleaning

If covers are to be removed for cleaning, dry cleaning is recommended since washing might cause some shrinkage, preventing the covers from being reapplied to the seats without damage. Other than spot cleaning the covers while they are in place, dry cleaning is not recommended, since the resulting fumes could be hazardous in the confines of the coach and the solvent could be detrimental to the foam padding of the seats.

27.3 Cleaning With Covers in Place

The most effective and economical method to clean the fabric seat covers is by washing with either an approved foam upholstery cleaner or with a mild household detergent.

1. Thoroughly vacuum the upholstery. Remove any spots or stains before the seats are washed to avoid a cleaning ring.
2. Dilute household detergent or liquid foam cleaner according to directions on the container. Pour a small quantity into a flat pan and work into a thick foam with a sponge or brush.

3. Apply only the foam to the fabric with a sponge or brush. Clean a small area of the fabric at a time with the foam. DO NOT SOAK. Rub vigorously.
4. Sponge the suds from the fabric with a clean sponge or cloth moistened with water. Rinse the sponge or cloth often and change the water when it becomes dirty.
5. Allow the upholstery to dry completely before the coach goes back into service. To speed up drying, excess moisture can be blown off the fabric with compressed air.

Note: *Oil in the air line will soil the fabric. Blow the line clear and test air discharge against a plain white piece of paper. It is also effective to press the edge of a flat hardwood stick down on the cushion and slowly draw it across the fabric.*

Even very soiled areas can be returned to their original appearance by a thorough cleaning, but a regular schedule of cleaning that keeps the upholstery reasonably clean at all times will add months to the service life of coach upholstery.

28. VEHICLE JACKING POINTS

The vehicle can be jacked by applying pressure under body jacking points or front and drive axle jacking points. When it is necessary to raise the vehicle, care should be taken to ensure that pressure is applied only at the points indicated in figure 65, 66 and 67. Equipment for lifting the front of the vehicle must have a combined lifting capacity of 13,000 lbs (5 900 kg). Equipment for lifting the rear of the vehicle must have a combined lifting capacity of 25,000 lbs (11 400 kg).

Warning: *Extra lift capacity may be required if luggage or any other type of load (e.g. conversion equipment) are onboard the vehicle.*

28.1 Body Jacking Points

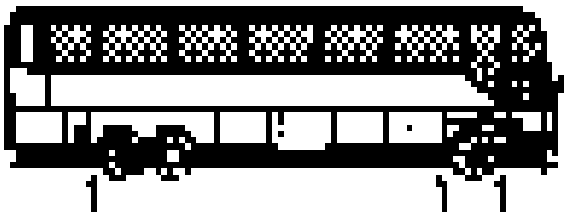

FIGURE 65: BODY JACKING POINTS 18083

Warning: *The suspension of the vehicle must be in the normal ride position before jacking. The "Level Low" system on a motorcoach must be in the "DRIVE" position prior to turning the ignition key "OFF".*

28.2 Axle Jacking Points

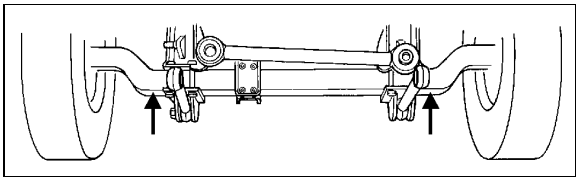

FIGURE 66: FRONT AXLE 18084

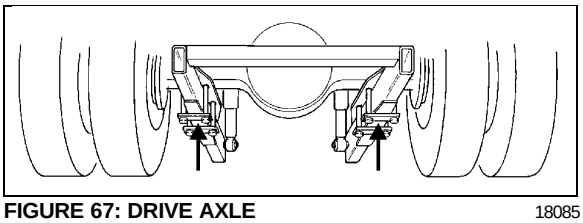

FIGURE 67: DRIVE AXLE 18085

Warning: *Always unload or retract the tag axle before jacking the vehicle from the front and drive axle jacking points to prevent damage to suspension components.*

28.3 Jacking the Tag Axle

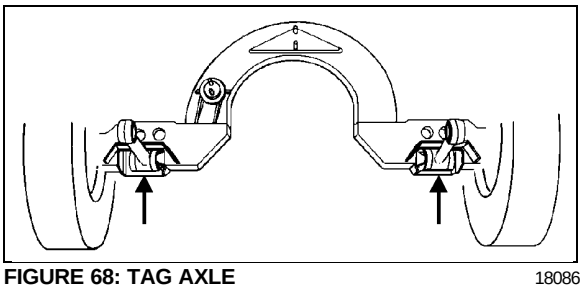

FIGURE 68: TAG AXLE 18086

Warning: *The jacking points on the tag axle must be used for raising the tag axle only.*

29. TOWING THE VEHICLE

The vehicle can be transported on a low bed semi-trailer of adequate gross axle weight capacity. When transporting a vehicle, apply parking brake and shut down the engine. Block all wheels and secure vehicle with tie-downs. Check that overall height will clear obstacles on the route to follow, and obtain required permits as required.

The vehicle can also be towed by lifting under the front axle or by towing from the front with all wheels on the ground. These 2 methods are described below under their respective headings. Whatever the method used, the vehicle should be towed by truck operators authorized and experienced in towing intercity coaches.

Observe normal precautions including, but not limited to, the ones listed below when towing the vehicle:

1. Make sure the parking brake is released before towing.
2. Do not allow passengers to ride inside the towed vehicle.
3. Tow the vehicle at a safe speed as dictated by road and weather conditions.
4. Accelerate and decelerate slowly with caution.

29.1 Lifting and Towing

The towed vehicle must be lifted from under the front axle only. The tow truck must be equipped with the proper lifting equipment to reach under the front axle since no other lifting points are recommended. Lifting and towing from any other point are unauthorized as it may cause serious damage to the structure. **Do not unload or raise the tag axle when lifting and towing to prevent overloading the drive axle.**

1. Remove both drive axle shafts to prevent damage to the transmission. Plug axle tube to prevent oil loss. Refer to Rockwell's *"Maintenance manual no.5"* in Section 11 *"Rear Axle"* in this manual for correct procedure.

Caution: *Transmission lubrication is inadequate when towing. With either automatic or manual transmission, the drive axle shafts must be removed to avoid serious damage to the transmission.*

2. Operate the engine of the vehicle when towing to maintain brake system air pressure. If the engine cannot be operated, connect an external air pressure line from the tow truck to the emergency fill valve in the engine compartment. The emergency fill valve in the front service compartment does not supply air pressure to the brake system. The air pressure must be a minimum of 75 psi (520 kPa), and the line should be attached to the air line with a clip-on chuck.

Caution: *Do not tow the vehicle without external air pressure applied to the emergency fill valve if the engine does not operate. Without brake system air pressure, the brakes may apply automatically if system air drops below 40 psi (275 kPa). If failure prevents releasing the parking brakes with air pressure, disengage the parking brakes mechanically.*

3. Lift the vehicle from under the front axle, and adequately secure the underside to the tow vehicle lifting attachment with chains.
4. Observe safety precautions when towing.

29.2 Towing Without Lifting

Caution: *When towing without lifting vehicle, use only a tow truck with a solid link tow bar and related equipment. All other means of towing are unauthorized. Tow only from the front of the vehicle.*

1. Remove both drive axle shafts to prevent damage to the transmission. Plug axle tube to prevent oil loss. Refer to Section 11, *"Rear Axle"* in this manual for correct procedure.

Caution: *Transmission lubrication is inadequate when towing. With either automatic or manual transmission, the drive axle shafts must be removed to avoid serious damage to the transmission.*

2. Operate the engine of the vehicle when towing to maintain brake system air pressure. If the engine cannot be operated, connect an external air pressure line from the tow truck to the emergency fill valve in the engine compartment.

The emergency fill valve in the front service compartment does not supply air pressure to the brake system. The air pressure must be a minimum of 75 psi (520 kPa), and the line should be attached to the air line with a clip-on chuck.

Caution: *Do not tow the vehicle without external air pressure applied to the emergency fill valve if the engine does not operate. Without brake system air pressure, the brakes may apply automatically if system air drops below 40 psi (275 kPa). If failure prevents releasing the parking brakes with air pressure, disengage the parking brakes mechanically.*

3. Position the tow truck so that the tow bar contacts the front bumper of the vehicle.
4. Attach the tow truck chains in the tow eyes of the vehicle under the bumper and take up all the slack.
5. Attach safety chains as applicable.
6. Observe safety precautions when towing.

SECTION 22: HEATING AND AIR CONDITIONING

CONTENTS

1. HEATING AND AIR CONDITIONING 22-5
1.1 Description 22-5
2. AIR CIRCULATION 22-5
2.1 Driver's Area 22-5
2.2 Central Section (Passengers) 22-5
3. DRIVER'S HVAC SYSTEM OPERATION 22-7
4. MAIN HVAC SYSTEM OPERATION 22-7
5. DIAGNOSIS OF MAIN HVAC UNIT PROBLEMS 22-11
5.1 High Pressure Orange LED 22-12
5.2 Low Pressure Orange LED 22-12
5.3 Driver's Red LED 22-12
5.4 Humidistat Yellow LED 22-13
6. MAIN HVAC UNIT TROUBLESHOOTING GUIDE 22-14
6.1 Control Temperature Chart 22-15
6.2 Checking Potentiometer Resistance Values 22-17
6.3 Checking the Sensor Resistance Values 22-17
6.4 Testing Each Sensor 22-17
6.5 Fresh Air Inlet Sensor 22-20
6.5.1 Description 22-20
6.5.2 Checkout 22-20
7. HVAC UNIT MAINTENANCE 22-20
7.1 Coil Cleaning 22-20
7.2 Driver's HVAC Unit Air Filter 22-21
7.3 Main HVAC Unit Air Filter 22-21
8. EVAPORATOR MOTOR 22-22
8.1 Removal 22-22
8.2 Installation 22-23
8.3 Maintenance 22-23
8.3.1 Checking Operation of Brush in Holder 22-23
8.3.2 Brush Wear Inspection and Replacement 22-23
8.3.3 Checking Commutator 22-23
8.4 Speed Controller Module 22-23
8.4.1 Troubleshooting 22-23
9. AIR CONDITIONING SYSTEM 22-24
9.1 Description 22-24
9.2 A/C Cycle 22-26
9.3 Refrigerant 22-26
9.3.1 Procurement 22-26
9.3.2 Precautions in Handling Refrigerant 22-26
9.3.3 Treatment in Case of Injury 22-27
9.3.4 Precautions in Handling Refrigerant Lines 22-27
9.4 Pumping Down 22-28

9.5 Adding Refrigerant (Vapor State) 22-29
..... 9.6 Evacuating System 22-29
9.7 Charging System 22-29
9.8 Refrigerant System Cleanout After Compressor Failure 22-30
9.8.1 Determining Severity of Failure 22-30
9.8.2 Cleanout after Minor Compressor Failure 22-30
9.8.3 Cleanout After Major Compressor Failure 22-31
10. A/C SYSTEM COMPONENTS 22-31
10.1 Compressor (Central System) 22-31
10.1.1 Belt Replacement 22-31
10.1.2 Pulley Alignment 22-32
10.1.3 Longitudinal Compressor Alignment 22-32
10.1.4 Horizontal Compressor Alignment 22-32
10.1.5 Vertical Compressor Alignment 22-32
10.1.6 Compressor Maintenance 22-33
10.1.7 Troubleshooting Guide 22-33
10.2 Magnetic Clutch 22-34
10.2.1 Time Delay Module 22-34
10.3 Condenser 22-34
10.3.1 Condenser Fan Motors 22-34
10.3.2 Condenser Fan Motor Removal 22-35
10.3.3 Preliminary Disassembly 22-35
10.3.4 Disassembly 22-36
10.4 Receiver Tank 22-36
10.5 Filter Dryer 22-36
10.5.1 Description 22-36
10.5.2 Replacement 22-36
10.5.3 Moisture Indicator 22-37
10.6 Liquid Refrigerant Solenoid Valve 22-37
10.6.1 Description 22-37
10.6.2 Manual Bypass 22-37
10.6.3 Coil Replacement 22-37
10.6.4 Valve Disassembly 22-37
10.6.5 Valve Reassembly 22-38
10.7 Humidistat 22-38
10.7.1 Description 22-38
10.7.2 Setting 22-39
10.7.3 Checkout 22-39
10.7.4 Maintenance 22-39
10.8 Expansion Valve 22-40
10.8.1 Main System 22-40
10.8.2 Driver's System 22-42
10.9 Torch Brazing 22-42
10.10 Troubleshooting 22-43
10.10.1 Expansion Valve 22-43
10.10.2 A/C 22-44
10.11 Temperatures and Pressures 22-46
10.12 Leak Testing 22-47

11. HEATING SYSTEM 22-47
11.1 Description 22-47
11.2 Draining Heating System 22-49
11.2.1 Driver's Heater Core 22-49
11.2.2 Main Heater Core 22-49
11.3 Filling Heating System 22-50
11.4 Bleeding Heating System 22-50
11.5 Soldering 22-50
12. HEATING SYSTEM COMPONENTS 22-50
12.1 Driver's Water Solenoid Valve 22-50
12.1.1 Description 22-50
12.1.2 Improper Operation 22-51
12.1.3 Coil Replacement 22-51
12.1.4 Valve Disassembly 22-51
12.1.5 Valve Reassembly 22-53
12.2 Main Hot Water Solenoid Valve Actuator 22-53
12.2.1 Description 22-53
12.2.2 Valve Actuator Removal (Figure 35) 22-54
12.2.3 Valve Repacking 22-54
12.2.4 Valve Rebuilding 22-54
12.2.5 Disassembly Procedures 22-55
12.2.6 Maintenance 22-55
12.3 Water Recirculating Pump 22-55
12.3.1 Description 22-55
12.3.2 Removal 22-55
12.3.3 Disassembly (Refer to Figure 37-Water Recirculating Pump and Motor) 22-56
12.3.4 Brushes 22-57
12.3.5 Bearings (Figure 37) 22-58
12.3.6 Commutator 22-58
12.3.7 Miscellaneous (Figure 37) 22-59
12.3.8 Assembly (Figure 37) 22-59
12.3.9 Installation 22-59
12.4 Water Filter 22-60
12.4.1 Description 22-60
12.4.2 Maintenance 22-60
12.4.3 Filter Servicing (Figure 38) 22-61
12.5 Bypass Solenoid Water Valve (optional) 22-61
12.5.1 To Remove or Change the Coil 22-61
12.5.2 To Take The Valve Apart 22-61
12.6 Preheating System (Optional) 22-62
12.6.1 Espar 22-62
12.6.2 Webasto 22-63
12.6.3 Preheating System Timers (Auxilary) (Optional) 22-63
12.6.4 Troubleshooting and Maintenance 22-63
13. SPECIFICATIONS 22-64

LIST OF ILLUSTRATIONS

FIG. 1: DRIVER'S AIR CIRCULATION....22-5
FIG. 2: MAIN HVAC SYSTEM AIR CIRCULATION 22-6
FIG. 3: A/C AND HEATING JUNCTION BOX....22-7
FIG. 4: VIEW FROM THE MAIN POWER COMPARTMENT....22-7
FIG. 5: A/C HEATING JUNCTION BOX SLIDING DRAWER....22-8
FIG. 6: HVAC LOGIC PANEL AND ELECTRONIC TRANSMITTER....22-9
FIG. 7: ELECTRONIC TRANSMITTER OUTPUT VOLTAGE RAMPS....22-10
FIG. 8: ELECTRONIC TRANSMITTER....22-11
FIG. 9: HVAC LOGIC MODULE....22-11
FIG. 10: HVAC CONTROL MODULE....22-13
FIG. 11: EVAPORATOR COIL....22-20
FIG. 12: CONDENSER COIL....22-21
FIG. 13: DRIVER'S HVAC UNIT AIR FILTER....22-21
FIG. 14: MAIN HVAC UNIT AIR FILTER....22-21
FIG. 15: HVAC COMPARTMENT....22-22
FIG. 16: EVAPORATOR MOTOR ASSEMBLY....22-22
FIG. 17: A/C SYSTEM COMPONENTS....22-25
FIG. 18: HVAC LOGIC PANEL....22-28
FIG. 19: ENGINE COMPARTMENT REAR DOOR....22-31
FIG. 20: COMPRESSOR ALIGNMENT....22-32
FIG. 21: COMPRESSOR ALIGNMENT....22-33
FIG. 22: CONDENSER FAN SPEED IN RELATION WITH RECEIVER TANK PRESSURE....22-35
FIG. 23: CONDENSER FAN MOTOR....22-35
FIG. 24: A/C CONDENSER COMPARTMENT....22-36
FIG. 25: REFRIGERANT SOLENOID VALVE....22-38
FIG. 26: EXPANSION VALVE....22-40
FIG. 27: SUPERHEAT ADJUSTMENT INSTALLATION....22-41
FIG. 28: HIGH & LOW SWING TEMPERATURE AT REMOTE BULB....22-41
FIG. 29: HEATING SYSTEM COMPONENTS....22-48
FIG. 30: CEILING OF THE SPARE WHEEL COMPARTMENT....22-49
FIG. 31: DRIVER'S HVAC UNIT....22-49
FIG. 32: HVAC COMPARTMENT....22-50
FIG. 33: DRIVER'S WATER SOLENOID VALVE....22-52
FIG. 34: HVAC COMPARTMENT....22-53
FIG. 35: MAIN HOT WATER SOLENOID VALVE....22-54
FIG. 36: VALVE BODY ASSEMBLY....22-55
FIG. 37: WATER RECIRCULATING PUMP....22-57
FIG. 38: WATER FILTER....22-60
FIG. 39: REAR ELECTRIC COMPARTMENT....22-62
FIG. 40: ESPAR (41 000 BTU)....22-63
FIG. 41: WEBASTO (80 000 BTU)....22-63

1. HEATING AND AIR CONDITIONING

1.1 Description

The coach's interior is pressurized by its **H**eating, **V**entilation, **A**ir **C**onditioning (**HVAC**) units. Air flow and controls divide the vehicle in two sections: driver's and Central (passengers) sections.

The interior of vehicle should always be slightly pressurized to prevent dust and moisture from entering vehicle. Each section has its own fresh air, returning air and discharge air ducting. The exhaust is mainly done through the lavatory ventilator and through normal air-tightness losses.

2. AIR CIRCULATION

2.1 Driver's Area

Fresh air is taken from a plenum behind the front bumper and enters the mixing box through an adjustable damper. Returning air is taken through a front dash panel into the mixing box. The *"Driver A/C-Heating Recirc.-Fresh Air"* control is located on the R.H. dashboard control panel. Mixed air goes through cooling and heating coils, fans and discharge ducts.

Both right and left discharge ducts defrost one half of the windshield. The driver can also, with the *"Main Windshield Defroster"* control divert his air flow to the console, from which he can direct vent to his knees and/or upper body with adjustable HVAC register and to his feet with the lever (Fig. 1).

Two additional air outlets are installed on the HVAC ducting system. One is located in the stepwell, the air flow can be regulated by pressing the marked fin. The flow can be shut-off or increased for maximum ventilation. The other air outlets is located behind the driver, on its L.H. side. The air outlet can be rotated to direct air flow.

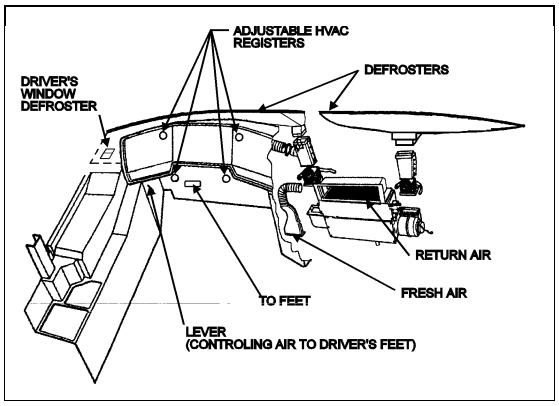

FIGURE 1: DRIVER'S AIR CIRCULATION 2202

2.2 Central Section (Passengers)

Fresh air is taken from the left side of vehicle through a two-position damper located at the left of the HVAC compartment. The pneumatic control damper can be fully opened for normal operation or partially closed for extreme weather or highly polluted areas. The *"Fresh Air Damper"* switch is located on the R.H. side lower control panel. Push down the rocker switch to partially close the fresh air damper. Refer to the H3 Operator's Manual for details.

Return air is drawn through the last entrance step riser and from the lower section of the floor ducts in two locations: one in the rear section of vehicle and the other in the front section of vehicle on the L.H. side (Fig. 2).

A double blower fan unit, which is activated by the evaporator motor, draws mixed air through an air filter, cooling and heating coils, then forces this air in the ventilation ducts (upper section) along the walls, and finally exhausts it at the bottom of the windows.

The HVAC system includes two adjustable registers to control air flow for the rear L.H. passenger seats. Air flow can be directed by adjusting the ball-socket nozzle. To adjust air flow volume, rotate the nozzle. Air flow can be increased to full-open and decreased to shut-off.

The lavatory ventilator acts as the main exhaust for the whole vehicle, eliminates odors, and finally heats or cools the lavatory with the vehicle's ambient air.

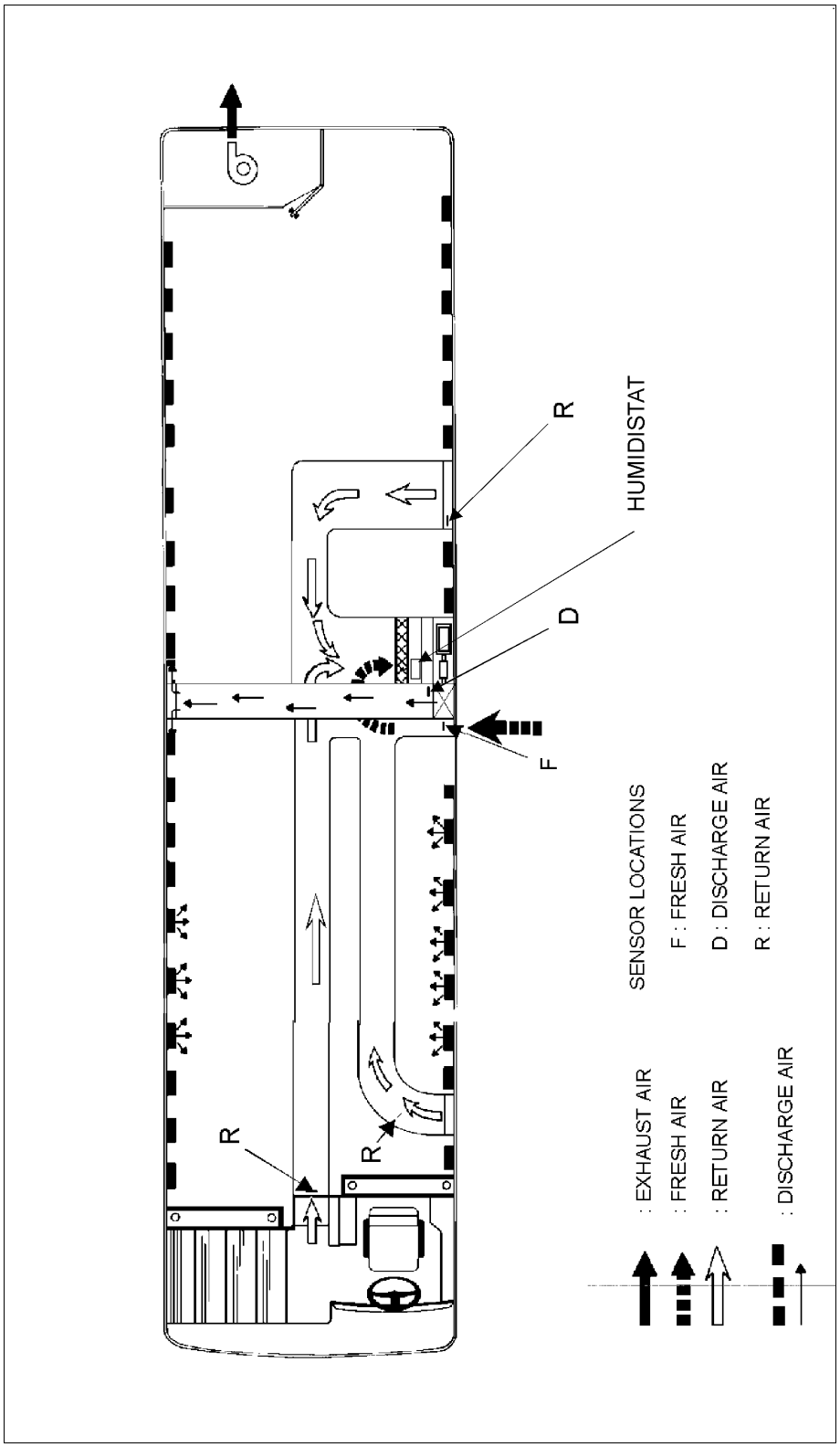

FIGURE 2: MAIN HVAC SYSTEM AIR CIRCULATION 22021

3. DRIVER'S HVAC SYSTEM OPERATION

The temperature control in the driver's area is provided by the *"Driver's A/C - Heating Temperature"* control mounted on the R.H. dashboard control panel, which is in fact a potentiometer, and by a thermistor sensor located under the dashboard close to the accelerator pedal. At extreme clockwise position, the temperature control will deliver full heat without any control.

The fan speed will be set by the position of the *"Driver's A/C - Heating Ventilation Speed"* control, also mounted on the R.H. dashboard control panel which has two functions. Th clicking noise produced while turning the control activates the heating or A/C system according to the *"Driver's A/C - Heating Temperature"* control position. This control also acts as a potentiometer. Consequently, it is possible to gradually increase speed of fan motor from 25% to maximum speed. An electronic module, mounted on the driver's HVAC unit, analyzes the value sent to the potentiometer, and thus sets the motor speed. This installation ensures economical operation, and a wide range of speeds.

The driver's HVAC unit piping is paralleled with the main HVAC unit piping. Both units use the same refrigerant and coolant, and are linked to the same condenser and compressor, even if they are individually controlled. It requires the main HVAC unit to engage the A/C compressor magnetic clutch. Consequently, the driver's unit cannot be operated in the A/C mode alone.

4. MAIN HVAC SYSTEM OPERATION

The *"Main A/C - Heating"* switch, located on the R.H. side lower control panel, operates the A/C-heating and ventilation system (HVAC) in the Main section. The *"Main A/C - Heating Temperature"* control, located on the R.H. side dashboard control panel, enables the selection of the temperature in the main section (refer to the H3 Operator's Manual for details). The evaporator motor installed in HVAC compartment on the L.H. side of vehicle is protected by a 150 amp, manually-resettable (CB8) circuit breaker mounted in the main power compartment (refer to Section 06, *"Electrical System"* in this manual for details).

The condenser mounted on the opposite side of the evaporator is ventilated by two axial fans. Each axial fan motor is protected by a manually-resettable 40 amp circuit breaker mounted on the L.H. side wall of the A/C and heating junction box (Fig. 3). Furthermore, the feeding circuit of these two breakers is protected by a 150 amp manually resettable (CB9) circuit breaker mounted in main power compartment (Fig. 4).

To operate air conditioning system when coach is stationary, engine should run at fast idle. During operation of air conditioning system, windows should be kept closed and door not left open longer than necessary. In order to prevent battery discharge, A/C-heating system will not operate if vehicle charging system is not working properly.

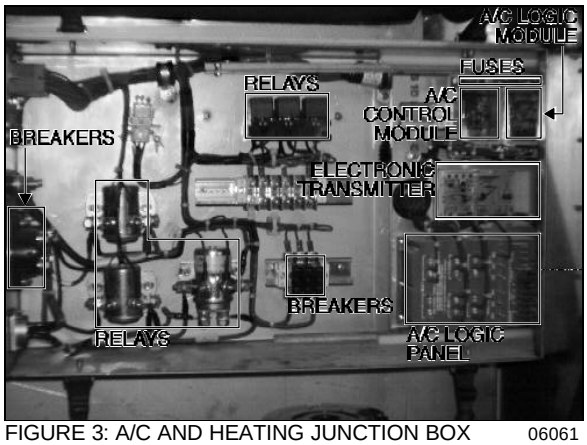

FIGURE 3: A/C AND HEATING JUNCTION BOX 06061

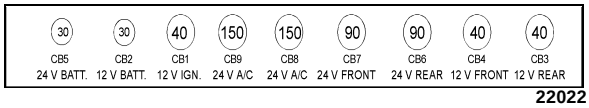

22022

FIGURE 4: VIEW FROM THE MAIN POWER COMPARTMENT

The heating and cooling components (water recirculating pump, main hot water valve actuator, A/C compressor clutch and unloaders, etc) are connected to the HVAC logic panel mounted on the A/C and heating junction box sliding drawer (Fig. 5).

Air temperature is picked up by three identical sensors, each one located in one of the three returning air ducts, and by another sensor located in the discharging air duct (Fig. 2). As shown in Figure 6, the sensors are series parallel connected. The electronic transmitter (see Fig. 5 and 6) detects the sensor signal and then compares it with the driver's setpoint (*"Main A/C - Heating Temperature"* control, which is mounted in R.H. dashboard control panel).

This will result in a voltage range (Fig. 7) for the HVAC logic panel. At this point, a fresh air sensor located in the fresh air damper on L.H. side of vehicle, can modify this range to anticipate any major change in the outside temperature. Afterwards, the HVAC logic panel will select the appropriate heat or cooling contact and staging according to the actual conditions. On the HVAC logic panel, there are three heat and three cooling contacts (Fig. 6).

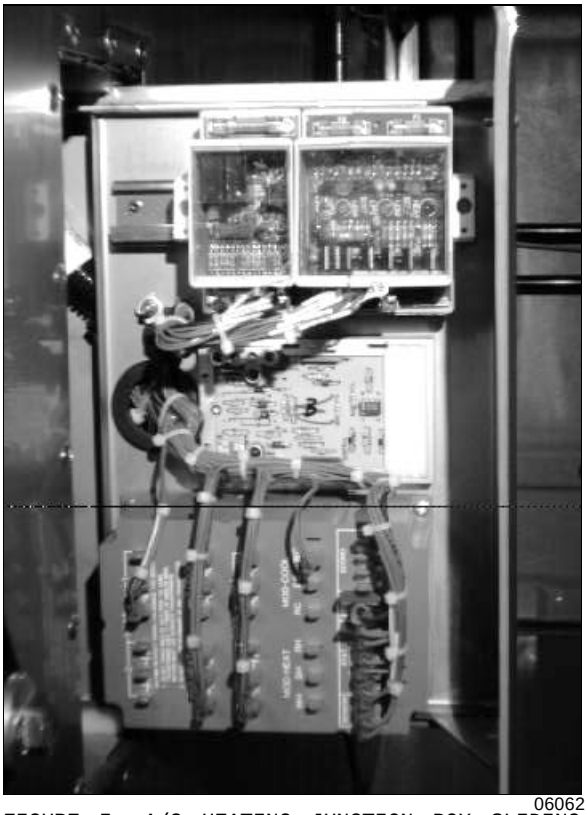

06062

FIGURE 5: A/C HEATING JUNCTION BOX SLIDING DRAWER

In the Heat Mode

Heat in the system varies with the restricted opening of the linear main hot water valve actuator, the bypass solenoid valve and the action of the water recirculating pump.

If the preheater is switched "ON", the bypass solenoid water valve opens and the main hot water valve actuator should be fully "CLOSE", except if **heat contact 3** is "ON" the main hot water valve actuator should be fully "OPEN".

The main hot water valve actuator is controlled by the heat voltage ramp (Fig. 7).

The **heat contact 1** starts the water recirculating pump and turn "ON" LEDs for diagnosis (see paragraph "5. DIAGNOSIS OF MAIN HVAC UNIT PROBLEMS").

The **heat contact 2** controls nothing.

In the Cooling Mode

Contact will vary with the number of active cylinders in the compressor by means of electric unloaders. Staging will be defined as follows:

No cooling contact: Compressor clutch is disengaged.

Cooling contact 1: Compressor clutch is engaged and 2 compressor active cylinders.

Cooling contact 2: Compressor clutch is engaged and 4 compressor active cylinders.

Cooling contact 3: Compressor clutch is engaged and 6 compressor active cylinders.

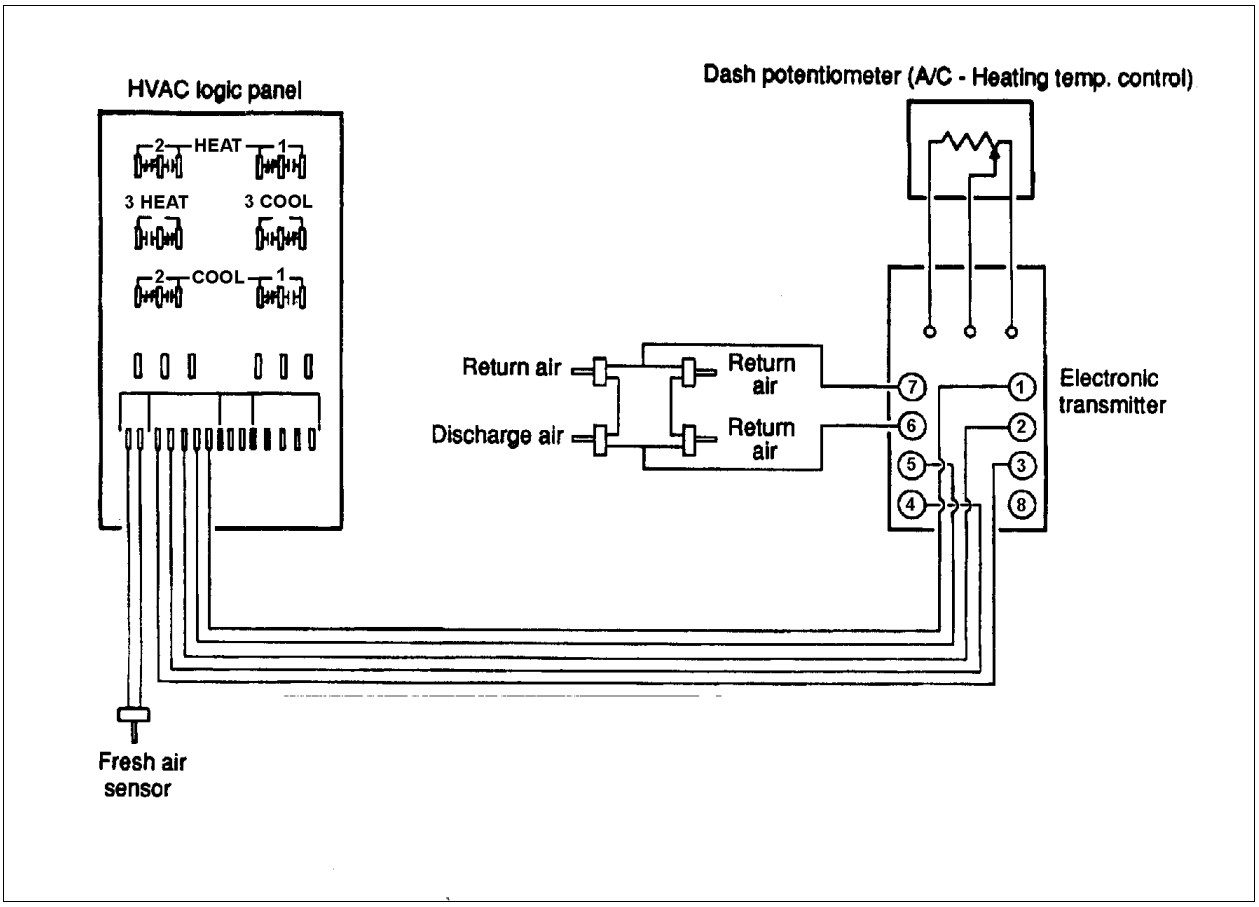

FIGURE 6: HVAC LOGIC PANEL AND ELECTRONIC TRANSMITTER 22023

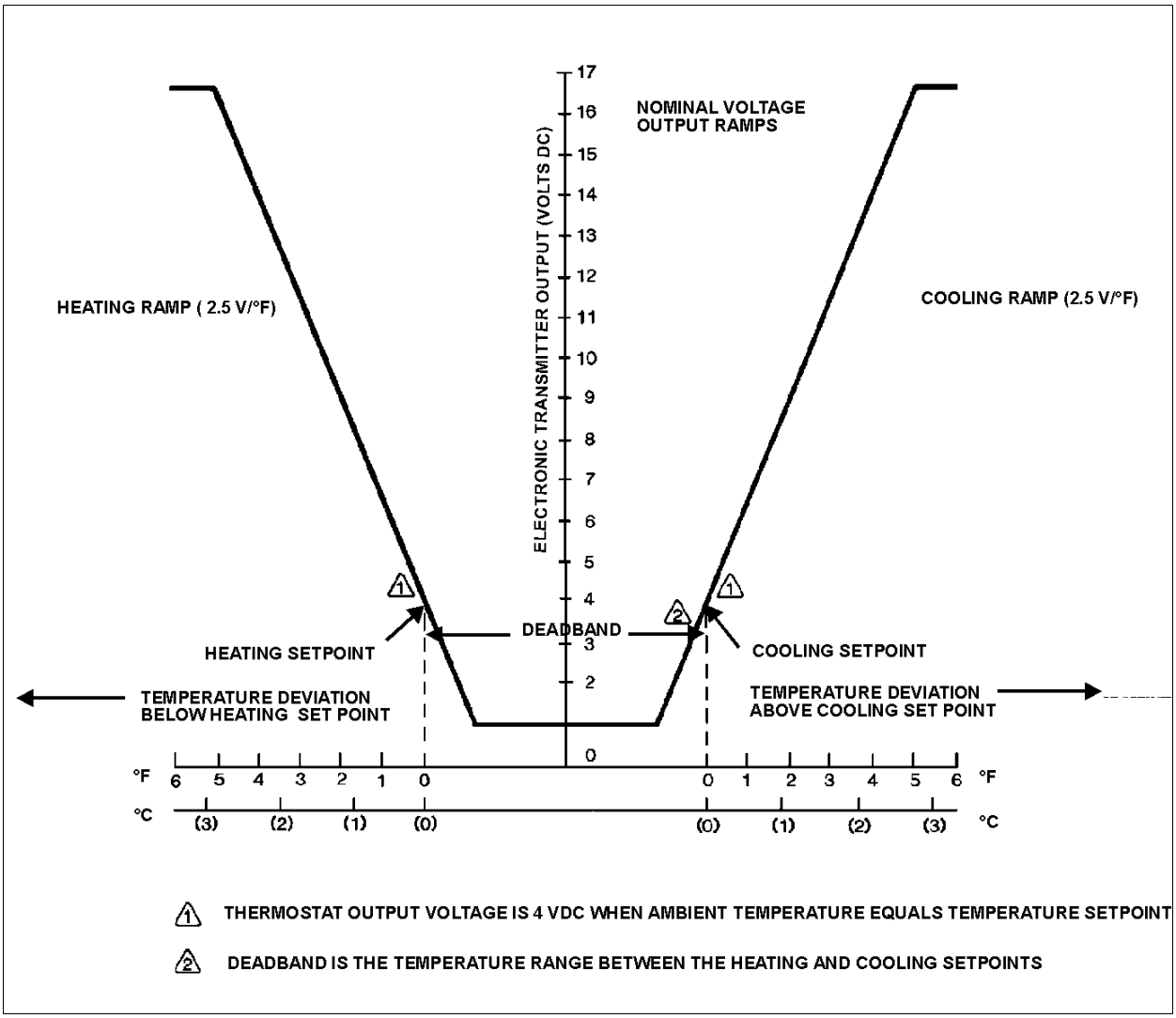

FIGURE 7: ELECTRONIC TRANSMITTER OUTPUT VOLTAGE RAMPS 22024

5. DIAGNOSIS OF MAIN HVAC UNIT PROBLEMS

Troubleshooting the HVAC system is made easier with the LEDs (light-emitting diodes) integrated in the system, and acting as indicator lights.

The main HVAC unit is equipped with three LEDs to indicate the heating mode and are located as follows:

One **red LED** is located on the **electronic transmitter** and identified *"Heat"* (Fig. 8). The electronic transmitter picks up the sensor signal and compares it with the setpoint established by the driver ("Main A/C - Heating Temperature" control). After analysis, a voltage signal, of which value is proportional to the analysis result (sensor vs driver's setpoint), is transmitted to the HVAC logic panel. The red LED on the electronic transmitter will be illuminated according to the voltage value, i.e. red LED may not be illuminated at first, and then will gradually reach its maximum brightness or vice versa.

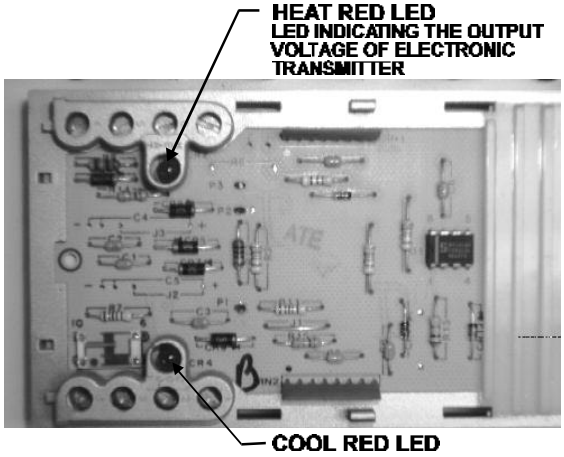

FIGURE 8: ELECTRONIC TRANSMITTER 22025

Two other red LEDs connected in parallel are located as follows:

One **red LED** is located in **driver's compartment**, on the lower console under the inside thermometer, while the other red LED is located on the HVAC logic module, which is mounted right over the electronic transmitter (Fig. 9). The two red LEDs operate simultaneously; unlike the LED mounted on the electronic transmitter, they may be illuminated or not (*"ON"* or *"OFF"*). Their function is to indicate the output of the HVAC logic panel.

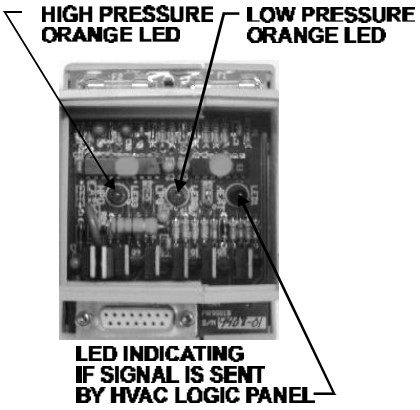

FIGURE 9: HVAC LOGIC MODULE 22026

The HVAC logic panel reads the voltage from the electronic transmitter. As soon as the voltage reaches 4.6 volts, the HVAC logic panel opens the normally-closed **heat contact 1**.

At this stage, the two red LEDs will illuminate to indicate that the HVAC logic panel has sent a signal to activate the heating system. If the other stages are activated, the two LEDs will remain illuminated.

The red LED on the lower console advises the driver that the heating system is operating. The red LED mounted on the HVAC logic module enables the technician to quickly diagnose the problem.

As for the A/C mode, it is almost the same installation, except that the red LED on the electronic transmitter is identified *"Cool"*. Its operation is, however, identical.

The significant difference lies in the fact that the two other LEDs connected in parallel are

green. One green LED is located in the driver's compartment on the lower console under the inside thermometer, while the other one is located on the HVAC control module. These two LEDs indicate the operation of the A/C system.

When the humidistat requests the operation of the A/C system to dry ambient air inside the vehicle, the two green LEDs will illuminate to indicate the operation of this system. However, the *"Cool"* red LED on the electronic transmitter will not illuminate, because the humidistat control bypasses the electronic transmitter. Therefore it is normal for the driver who requests heat by means of the *"Main A/C - Heating Temperature"* control, that the red and green LEDs be illuminated simultaneously. This corresponds to the operation of the heating system to heat the vehicle, and to the operation of the A/C system to dry air (dehumidification).

Note: *The dehumidifying function will operate only when the humidistat requests dehumidification AND the ambient temperature inside vehicle is less than 4 F (2 C) from the selected temperature with "Main A/C - Temperature" control.*

In addition to the two LEDs on the electronic transmitter and to the four other ones used to indicate the output of HVAC logic panel, four other LEDs described hereafter have been added on the HVAC control module and HVAC logic module to help the technician to quickly diagnose the problem.

5.1 High Pressure Orange LED

This LED mounted on the HVAC logic module (Fig. 9), is designed to light up when the pressure inside the A/C system (high pressure side) is too high. If this occurs, perform the following checks:

1. Too high air inlet temperature to the condenser;
2. Dirty condenser;
3. Faulty condenser fans; or
4. Refrigerant overcharge.

Note*: Another indicator light, "High A/C Pressure Indicator", mounted in the dashboard will also illuminate in order to inform the driver of this abnormal situation.*

Note*: If the A/C pressure is too high, the compressor clutch is disengaged, but the fan remains active.*

5.2 Low Pressure Orange Led

This LED, also mounted on the HVAC logic module (Fig. 9), is designed to light up when the pressure inside the A/C system (low pressure side) is too low. If this occurs, perform the following checks:

1. Too low air inlet temperature to condenser and/or evaporator;
2. Dirty evaporator air filter;
3. Dirty evaporator;
4. Low refrigerant charge; or
5. Expansion valve freeze up.

Note*: Another indicator light "Low Conditionning A/C Pressure Indicator", mounted in the dashboard will also illuminate in order to inform the driver of this abnormal situation.*

Note: *If the A/C pressure is too low, the compressor clutch is disengaged and the fan is deactivated.*

5.3 Driver's Red LED

This LED, mounted on the HVAC control module (Fig. 10), will turn on to indicate the energization of the driver's liquid refrigerant solenoid valve, each time there is a cooling request by the *"Main A/C - Heating Temperature"* control and the driver's system fan is on.

Note: *Cooling mode in driver's compartment will remain inoperative as long as central A/C system has not been turned on. Furthermore, central A/C system must be in cooling mode and not in dehumidifying mode, to allow cooling of the driver's compartment as driver's evaporator unit never operates in the dehumidifying mode.*

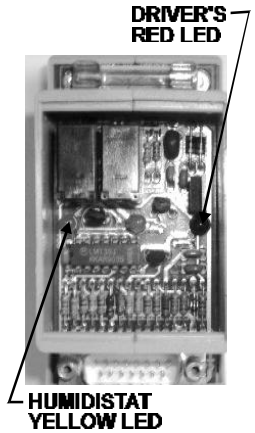

FIGURE 10: HVAC CONTROL MODULE 22027

5.4 Humidistat Yellow LED

This LED, mounted on the HVAC control module (Fig. 10), will be turned on (full intensity) during a dehumidifying request. It can also be half illuminated during a heat request.

Note: *Even if the dehumidifying function is requested, the cooling contact 1 on the HVAC logic panel will not turn on as long as the ambient temperature inside the vehicle will be over than 4 F (2 C) from the selected temperature with "Main A/C - Temperature" control.*

6. MAIN HVAC UNIT TROUBLESHOOTING GUIDE

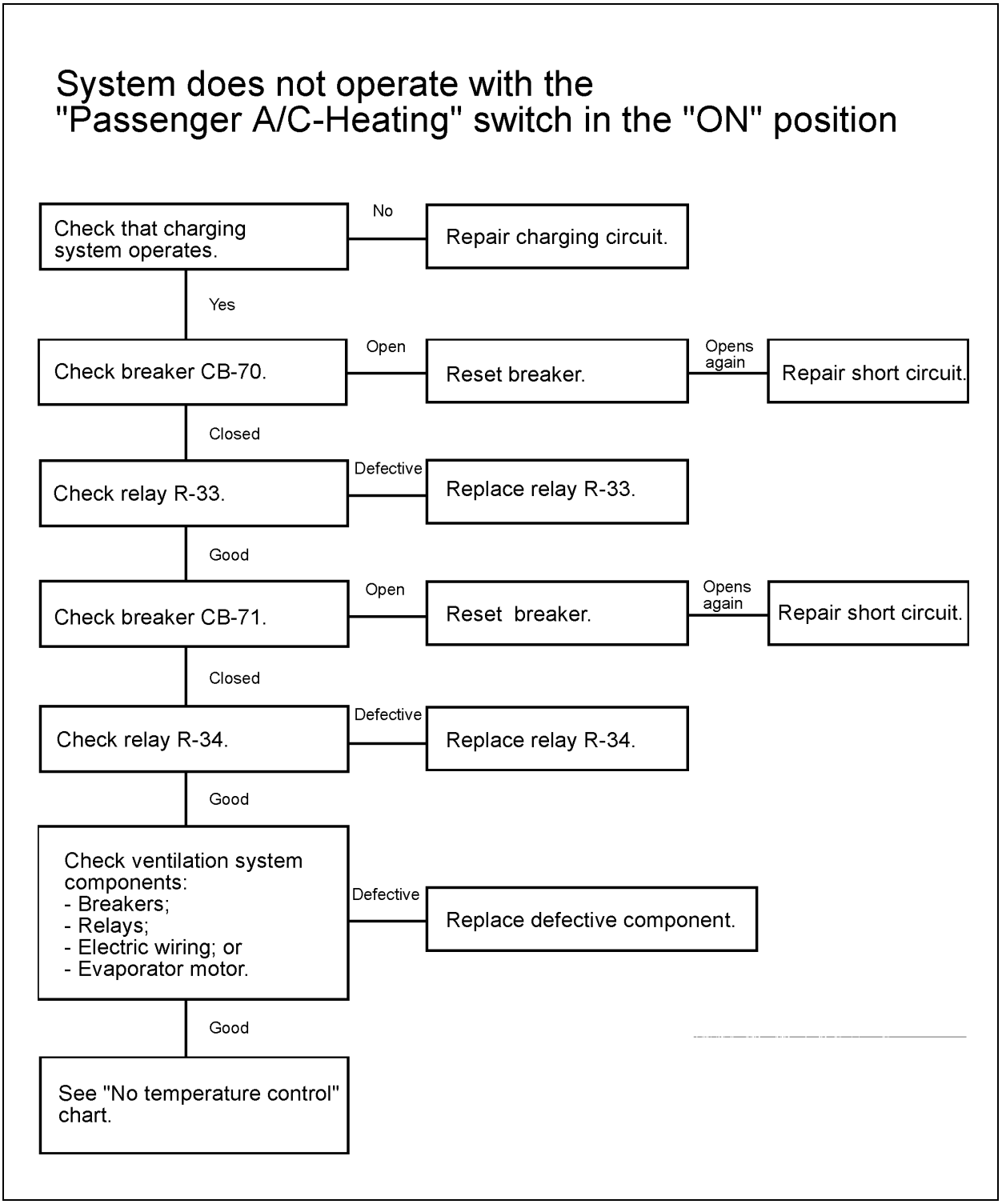

DIAGRAM 1: TROUBLESHOOTING CHART - MAIN HVAC UNIT 22028

6.1 CONTROL TEMPERATURE CHART

Ventilation operates, but there is "no temperature control".

Turn "Passenger A/C-Heating Temperature" control to extreme clockwise or counterclockwise position (cold or warm).

Set humidistat (located in HVAC compartment over evaporator motor) to its maximum position to inhibit operation of A/C system which could alter data.

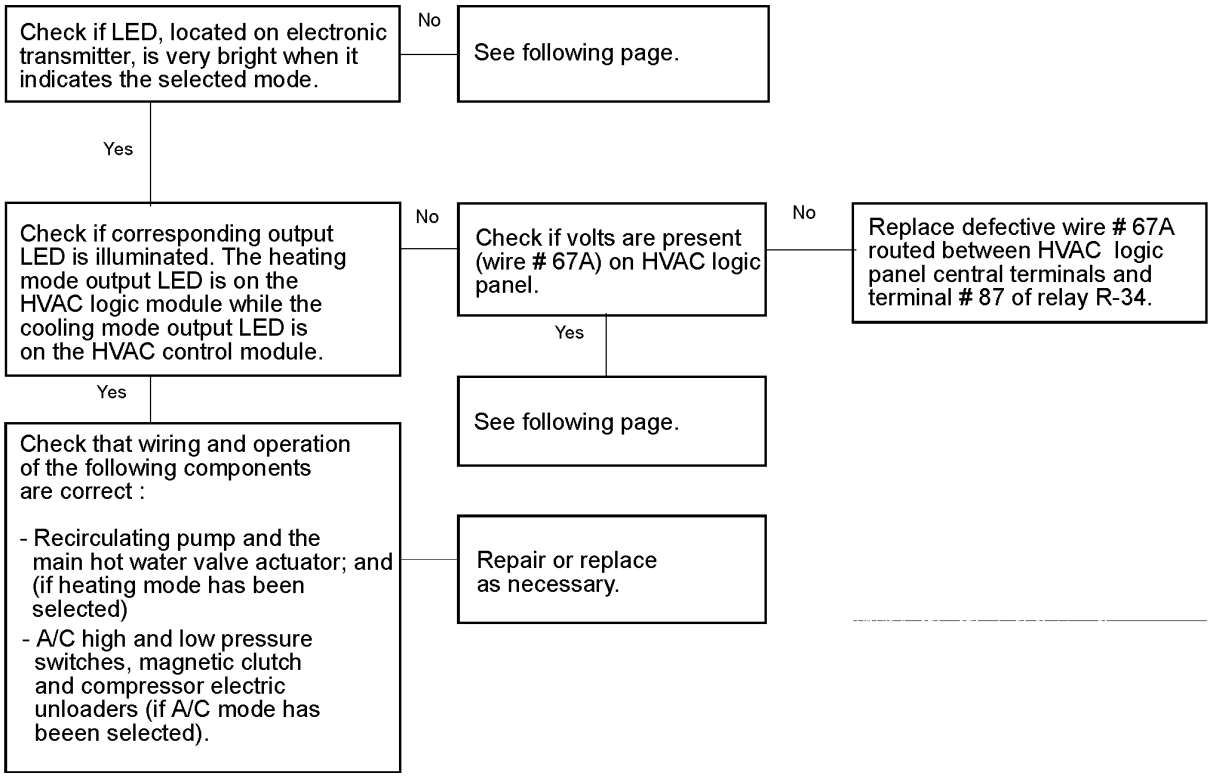

DIAGRAM 2: TROUBLESHOOTING CHART - TEMPERATURE 22029

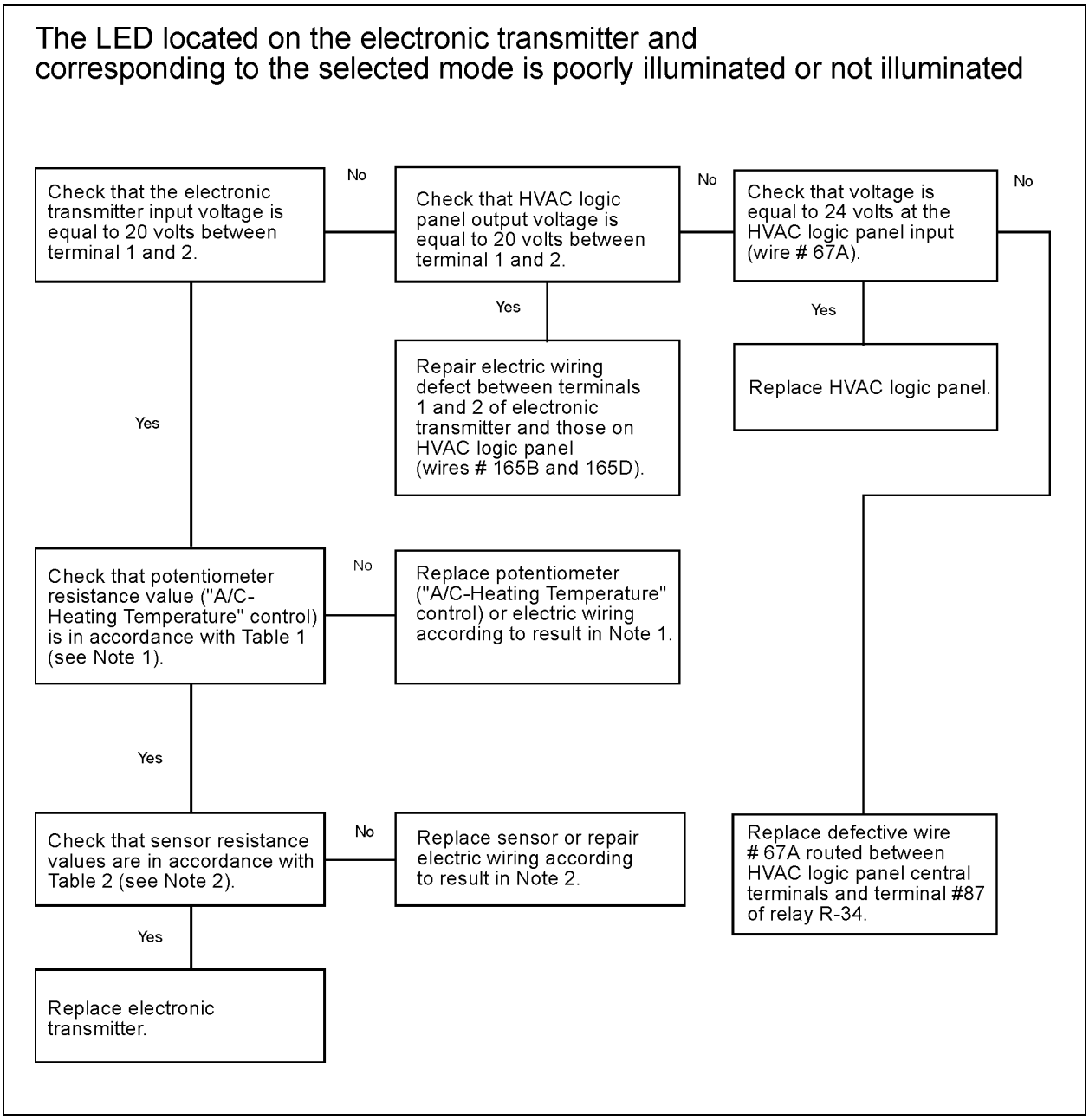

DIAGRAM 3: TROUBLESHOOTING CHART - ELECTRONIC TRANSMITTER 22030

6.2 Checking Potentiometer Resistance Values

Disconnect the 2-pin connector C-137 located on the A/C and heating junction box sliding drawer in back of the electronic transmitter. Locate the corresponding female contact pins for wires #167 and #167A, and using an ohmmeter connected according to the indications given in Table 1, check if readings match with data of Table 1. At location #165D, place the ohmmeter probe on head of screw #1 of electronic transmitter.

***Note**: Readings may be slightly higher than those in Table 1 due to the length of the wires routed between the electronic transmitter and the potentiometer.*

If reading does not match, proceed as follows to check if potentiometer or wiring between potentiometer and electronic transmitter is defective:

Disconnect the 3-pin connector C-355 located under the dashboard, right behind the potentiometer. Identify male contact pins corresponding to the green, brown or black, and pink or red wires from potentiometer. Using an ohmmeter connected according to the indications given in Table 1 (refer to the following cross-reference between wire color and wire number), check if readings match with data of Table 1.

If readings match, trouble is located in wiring between connector C-355 and electronic transmitter. If reading does not match, potentiometer is defective.

WIRE COLOR & NUMBER CROSS REFERENCES	
Between connector C-355 and potentiometer	Between connector C-355 and electronic transmitter
Green	165D
Brown or black	167A
Pink or red	167

6.3 Checking the Sensor Resistance Values

Remove the eight screws (#1 to #8) on the electronic transmitter and move it away from its support which holds the junction terminals. Locate terminals #6 and #7 on support, and using an ohmmeter, note the reading between these two terminals. (The board is moved away from its support to isolate the sensor electric circuit from the electronic transmitter. Compare reading with data of Table 2 given in the *"Recirculated Air Sensor"* curve. Temperature at the bottom of Table 2 is the temperature picked up by the sensor at the time of verification.

Reading between terminals 6 and 7 corresponds to the total resistance of the four paralleled series sensors. Thus, if reading does not match with Table 2, check if problem is located at sensors or wiring.

6.4 Testing Each Sensor

Disconnect each connector from its respective sensor (refer to Fig. 2 for sensor location), then with an ohmmeter, note each sensor reading.

***Note**: To gain access to the sensor connector located in the last entrance step riser, remove the six screws retaining grill, the grill, the four bolts securing the sensor mounting plate to the air return duct, then lift the sensor mounting plate.*

Compare each reading with data of Table 2 given in the *"Recirculated Air Sensor"* curve. The four-sensor curves are used again, since each sensor, taken individually, has the same resistance as the four paralleled series sensors taken together. If all sensors check good, the problem is located in wiring between terminals 6 and 7 and the sensors.

CIRCUIT DIAGRAM OF DUAL POTENTIOMETER (A/C-HEATING TEMPERATURE CONTROL)

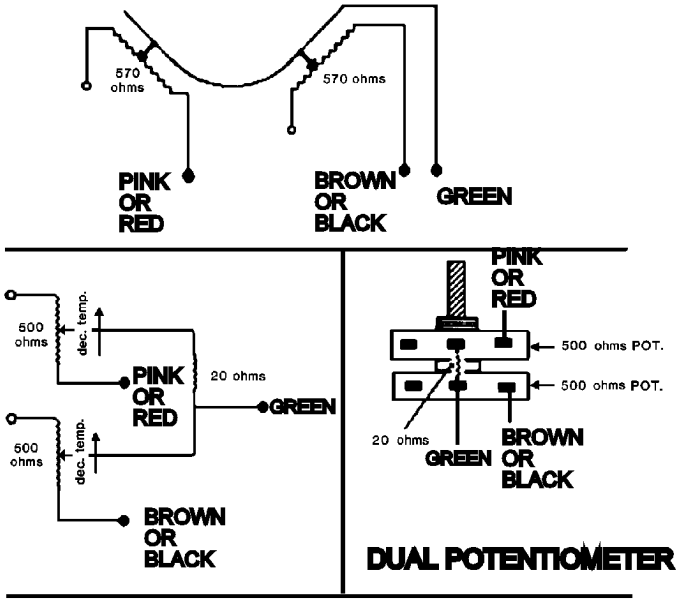

WIRE CONNECTIONS / SELECTED TEMPERATURE		POTENTIOMETER RESISTANCE						
		GREEN	PINK OR RED		GREEN	BROWN OR BLACK	BROWN OR BLACK	PINK OR RED
heating	cooling	165D	167		165D	167A	167A	167
Min.	Max.	534 ohms		19 ohms	515 ohms		1046 ohms	
		493		20	473		964	
		426		24	402		825	
		352 ohms		27 ohms	325 ohms		673 ohms	
		284		32	252		532	
		210		34	176		383	
		143 ohms		39 ohms	104 ohms		243 ohms	
Max.	Min.	76		45	31		103	

TABLE 1

22031

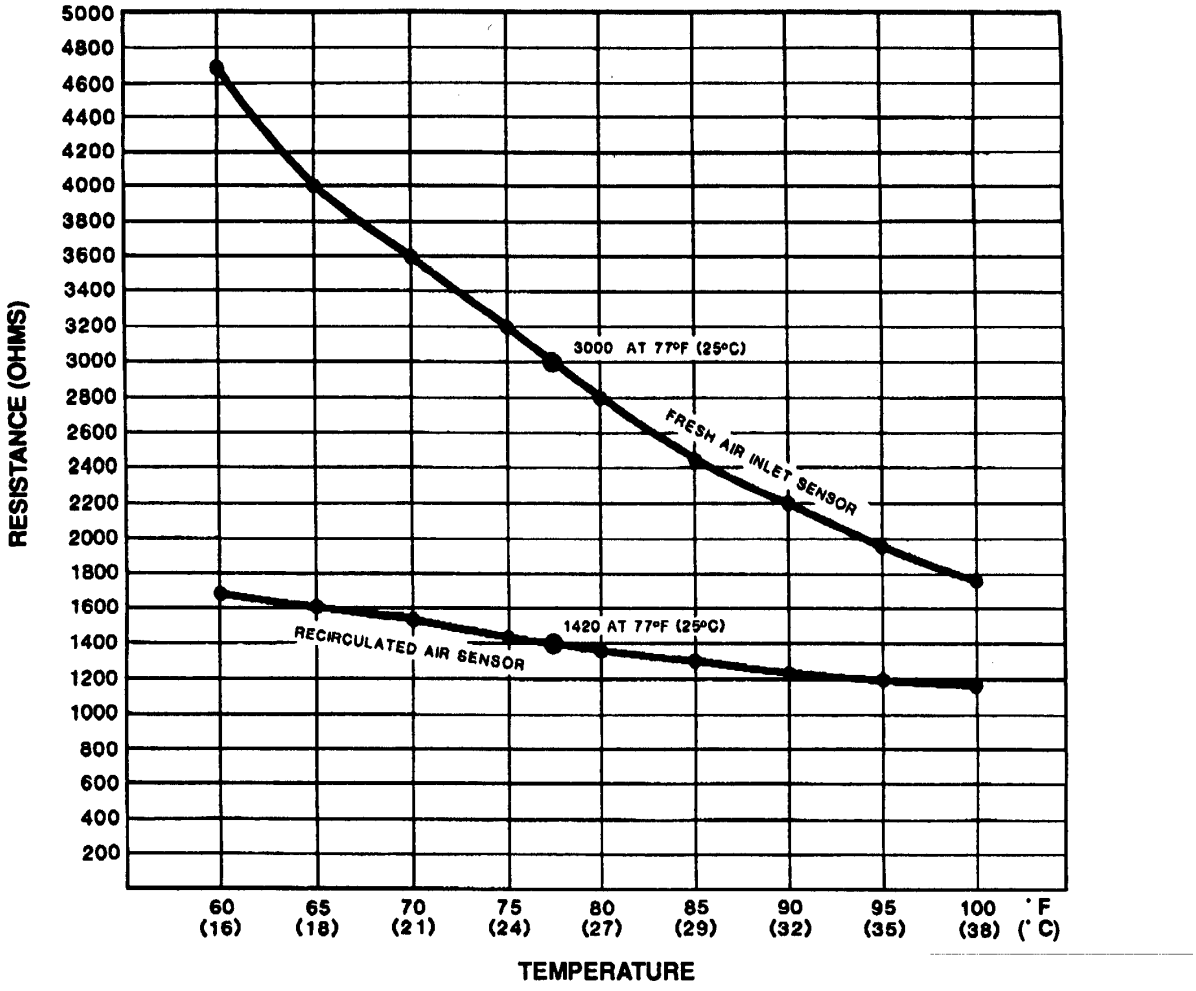

TABLE 2: RESISTANCE RANGE ACCORDING TO AMBIENT TEMPERATURE SENSORS 22032

6.5 Fresh Air Inlet Sensor

6.5.1 Description

The main HVAC is provided with a fresh air sensor located in the fresh air damper. The fresh air sensor consists of a thermistor sensing element mounted in a tubular probe. The negative temperature coefficient characteristic of the thermistor element causes its resistance to decrease as the sampled air temperature increases. The fresh air sensor provides heating and cooling anticipation to the system at a sensitivity ratio of 25:1. In other words, a 25°F (14°C) increase in fresh air inlet temperature corresponds to a 1°F (0,6°C) decrease in set temperature. Thus, if sensor is short-circuited or in an open circuit condition, the control system will be slightly affected, i.e. the temperature inside of vehicle will be about 2 or 3 °F (1 or 2 °C) lower or higher than the temperature selected by the driver with the *"Main A/C - Heating Temperature* " control.

6.5.2 Checkout

1. Set the ohmmeter scale to R X 1000.

2. At the HVAC logic panel located on the A/C and heating junction box sliding drawer, disconnect wiring terminal "T1" from sensor outlet.

3. Connect a wire of the ohmmeter to terminal "T" of HVAC logic panel, and the other wire of the ohmmeter to the loose wire of sensor.

4. The ohmmeter reading will vary according to the temperature picked up by the sensor. The fresh air inlet sensor resistance must vary between 1600 and 4800 ohms. Refer to Table 2 for the resistance readings at different temperatures. If reading does not match with the data of Table 2, disconnect wiring connector directly from fresh air sensor which is accessible from the evaporator compartment, then measure resistance of the fresh air sensor to determine if sensor or its wiring between sensor and HVAC logic panel are defective.

7. HVAC UNIT MAINTENANCE

No special maintenance is required on the main and driver's units, with the exception of cleaning their respective coil air filters.

Note: *Squeeze rubber hose located under the concerned compartment, to eliminate water and dirt when you make routine maintenance.*

7.1 Coil Cleaning

Check the external surface of the coil at regular intervals for dirt or any foreign matter.

For the driver's HVAC unit, flush the coil from inside (Fig. 13) , and for the evaporator, back flush the coil (Fig. 11) every 12,500 miles (20 000 km) or once a year, whichever comes first.

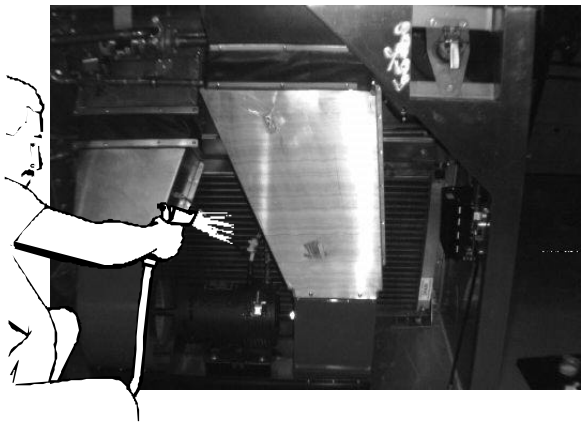

FIGURE 11: EVAPORATOR COIL 22033

For the condenser coil, back flush the coil (Fig. 12) every 6,250 miles (10 000 km) or twice a year, whichever comes first.

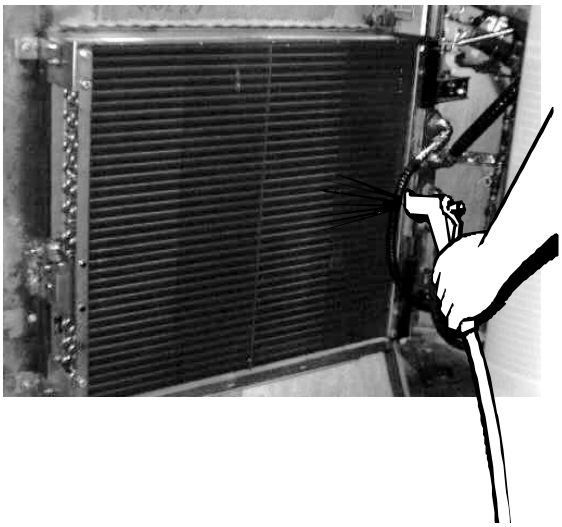

FIGURE 12: CONDENSER COIL 22034

Use a water jet or water mixed with air pressure to clean the coil.

Caution: *Direct the pressure straight through the coil to prevent bending of fins and do not use extremely high pressure. Do not use hot water, steam or caustic soap.*

7.2 Driver's HVAC Unit Air Filter

The air filter is located under the dashboard (Fig. 13). To gain access, unscrew both 3/4 turn knurled fasteners of A/C & heating units access panel located over entrance door steps counterclockwise. Remove panel and filter. To clean filter, back flush with water, then dry with air, every 12,000 miles (20 000 km) or once a year, whichever comes first.

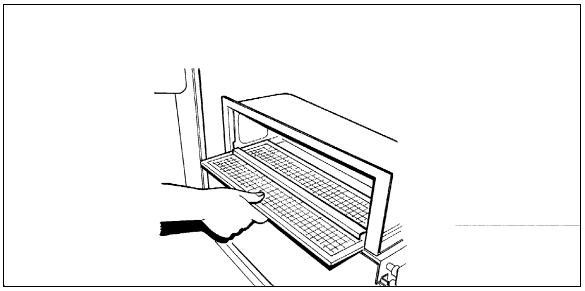

FIGURE 13: DRIVER'S HVAC UNIT AIR FILTER MAXE2209

7.3 Main HVAC Unit Air Filter

The main air filter is located in the HVAC compartment (Fig. 14). To access the filter, locate access panels in one of the baggage compartments adjacent to the HVAC compartments (L.H. side). Open panels by unscrewing the three screws of either panel 1/4 of a turn, unsnap both fasteners on top of filter, and slide out filter. To clean filter, back flush with water or soapy water, then dry with air every 12,000 miles (20 000 km) or once a year, whichever comes first.

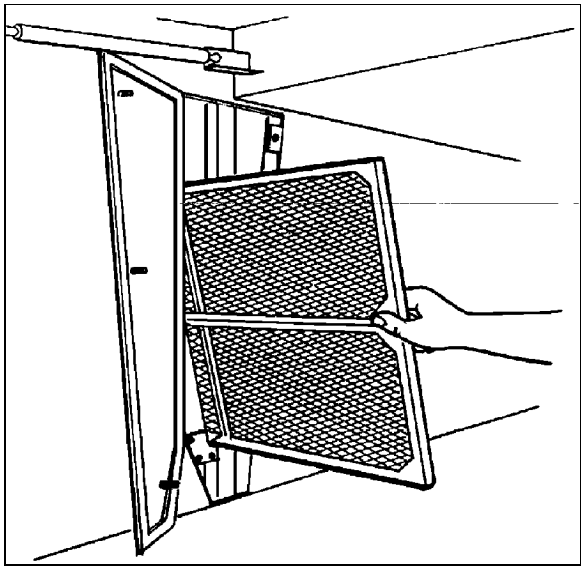

FIGURE 14: MAIN HVAC UNIT AIR FILTER **22100**

Caution: *Do not use high pressure water jet to avoid damaging filter.*

Caution: *Be sure not to reverse filter upon installation.*

8. EVAPORATOR MOTOR

The evaporator motor is installed in the HVAC compartment (L.H. side of vehicle) (Fig. 15). It is a 27.5 volt, 2 HP (1,5 kW) motor which activates a double blower fan unit. An evaporator motor speed controller is installed in the HVAC compartment as standard equipment.

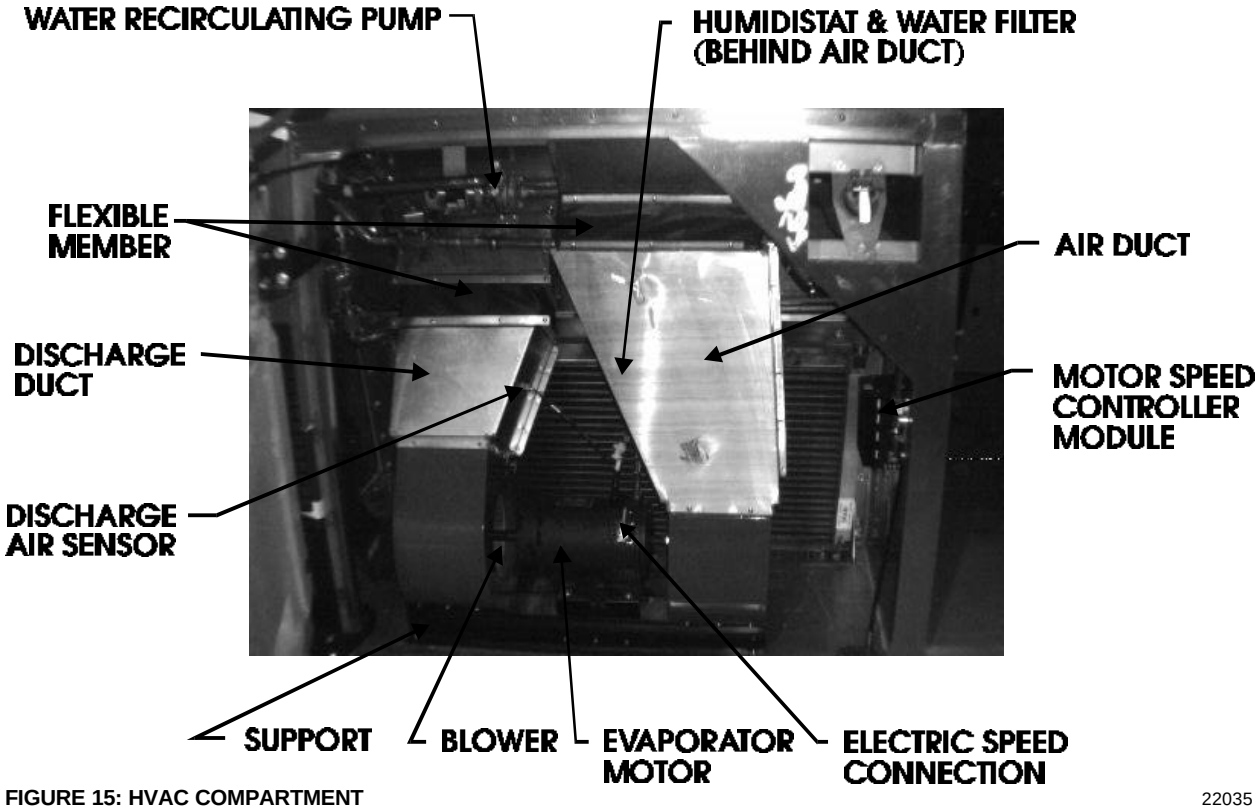

FIGURE 15: HVAC COMPARTMENT 22035

8.1 Removal

1. Set the main battery disconnect switch to the *"OFF"* position.
2. Open the last L.H. side baggage compartment door. Pull the black release button located on the L.H. side in order to unlock and open the HVAC compartment door.
3. Identify the L.H. side discharge duct inside compartment and remove the Phillips head screws retaining the flexible member to duct. Separate the adhesive tape (680453) on the duct.
4. Repeat step 3 for the R.H. side discharge duct.
5. Disconnect the discharge air sensor connector. Remove the cable tie securing wire.
6. Disconnect electrical speed connection control on the motor plate.
7. From under the vehicle, remove the eight bolts retaining the evaporator fan motor support. Remove the complete unit from the HVAC compartment (Fig. 16).
8. On a work bench, unscrew the fan square head set screws, the Phillips head screws retaining cages to support and slide out the assemblies from the evaporator motor output shaft.

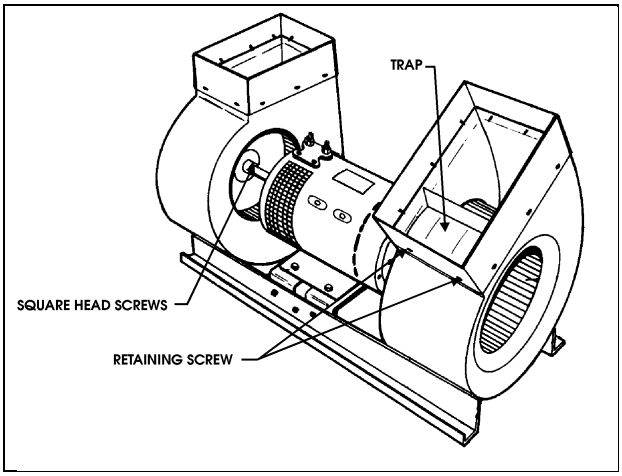

FIGURE 16: EVAPORATOR MOTOR ASSEMBLY 22036

Caution: *Never support evaporator motor by its output shafts while moving it.*

8.2 Installation

To reinstall the evaporator motor, reverse "Evaporator Motor Removal" procedure.

8.3 Maintenance

8.3.1 Checking Operation of Brush in Holder

Lift brush slightly 1/8 inch (3 mm) and release it. Brush must produce a dry noise.

8.3.2 Brush Wear Inspection and Replacement

Replace the brushes if less than ¾ inch (19 mm). New brush length is 1-¼ inch. Clean brushes with a clean cloth impregnated with gasoline or alcohol.

Warning: *Cleaning products are flammable and may explode under certain conditions. Always handle in a well ventilated area.*

To replace brushes, proceed as follows:

1. Set main battery disconnect switch(es) to the "OFF" position.
2. Remove the protective screen band from the motor housing by pulling down the spring loaded fastener.
3. Remove and replace brushes as per the standard procedure.
4. Reverse installation procedure.

8.3.3 Checking Commutator

The surface must be polished. A brown-black colored surface is normal and indicates a good switching. Ensure there is no evidence of arcing or metal chips.

8.4 Speed Controller Module

The optional evaporator motor speed controller module is mounted on the R.H. side wall inside the HVAC compartment (Fig. 15). The purpose of this electronic module is to limit the evaporator motor speed to 75% of its full rated speed throughout the heating mode and during the first stage of the cooling mode. The module will then gradually increase the motor speed as the cooling demand increases.

8.4.1 Troubleshooting

Check that evaporator motor is in good condition. Perform the following test in order to determine if speed controller module is defective, or if HVAC logic panel is sending a bad signal to the module.

1. Locate the HVAC logic panel mounted on the A/C and heating junction box sliding drawer compartment as illustrated in Figure 3.
2. Disconnect the "WC" wire from the HVAC logic panel "WC" terminal.
3. Connect an ammeter between the "WC" terminal on the HVAC logic panel and "WC" wire previously disconnected.
4. The ammeter should indicate 0 mA when *"A/C & Heating temperature"* control is turned to the maximum heating position, and approximately 4.85 mA when it is turned to the maximum cooling position. If not, check ground continuity on speed controller module as follows.

5. Set the *"A/C & Heating"* switch to the *"OFF"* position. Connect an ohmmeter between the large and small "--" (ground) terminals on speed controller module.

6. The ohmmeter should indicate less than 5 ohms. If more, the internal ground circuit is defective and can be corrected by installing a jumper wire (18 AWG) between the two "--" (ground) terminals.

7. With the *"A/C & Heating"* switch set to the "ON" position, repeat steps 3 and 4. If readings still do not check within tolerance, replace speed controller module.

8. Connect a voltmeter between the *"Motor"* and "--" (ground) large terminals on speed controller module.

9. The voltmeter should indicate approximately 7.5 V when *"A/C & Heating Temperature"* control is turned to the maximum heating position, and approximately 0.5 V when it is turned to the maximum cooling position. If not, the speed controller module is defective and must be replaced as a unit.

9. AIR CONDITIONING SYSTEM

9.1 Description

The schematic of Figure 17 shows the A/C system and its components. The system is equipped with a 6 cylinder, 05G-134A Carrier compressor. The air conditioning capacity is 9 tons. The receiver and filter dryer are mounted inside the A/C condenser compartment. The fuel filler door is a small door located at left of A/C condenser compartment door, allowing viewing of the filter dryer and the moisture indicator.

***Note**: For opening of the A/C condenser door, close the baggage compartment door at the left of the A/C condenser compartment door, but do not close the fuel filler door.*

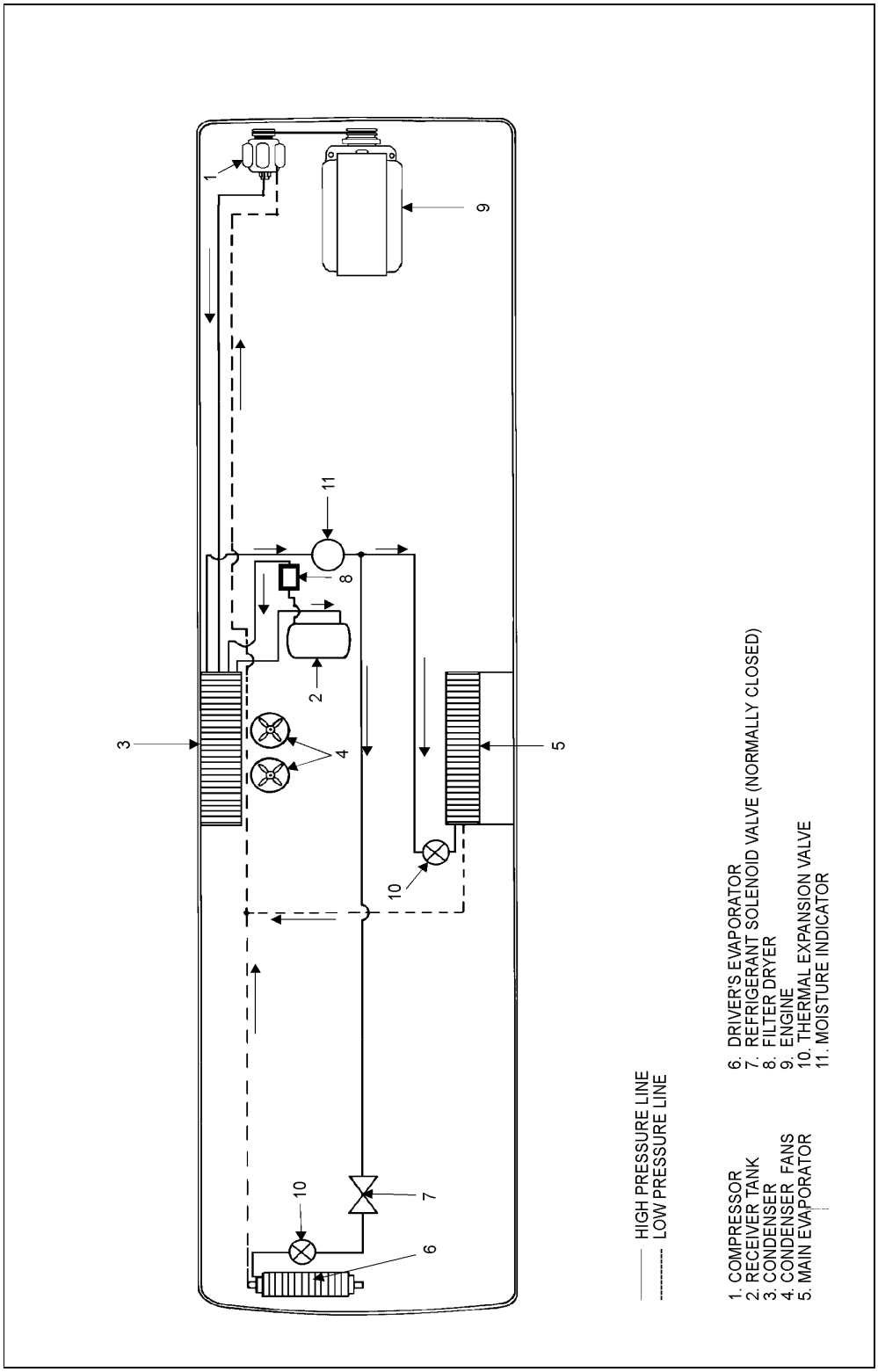

FIGURE 17: A/C SYSTEM COMPONENTS 22037

9.2 A/C Cycle

Refrigeration may be defined as "the transfer of heat from a place where it is not wanted to a place where it is unobjectionable". Components required for a closed circuit refrigeration system are shown in Figure 17 .

The air conditioning system in the H3 series vehicles is the "Closed" type system using R-134a.

1. The refrigerant flowing to the compressor, is compressed to high pressure and reaches a temperature higher than the surrounding air. It is passed through the air-cooled fins and tubes of the condenser coil causing the hot, high pressure gas to be condensed into a liquid form.

2. The liquid refrigerant flows to the receiver tank, then through a filter dryer where all moisture, acids and dirt are removed. It is passed again into the condenser sub-cooling and through a moisture indicator which indicates if any moisture is present in the system.

3. By its own pressure, the liquid refrigerant flows through a thermal expansion valve where the pressure drop vaporizes in a vapor-liquid state at a low temperature pressure.

4. The cold low pressure refrigerant passes through the main and the driver's evaporator absorbs heat from the air passing over the fins and tubes, and changes into gas. In this form, the refrigerant is drawn into the compressor to repeat the air conditioning cycle.

   The success of the air conditioning system depends on retaining the conditioned air within the coach. All windows and intake vents should be closed. An opening of approximately 8 in^2 (5162 mm^2) could easily neutralize the total capacity of the system.

   Other causes of inadequate cooling are dirty coils or filter. Dirt acts as an insulation and is also serves as a restriction to the air flow.

   The refrigeration load is not constant and varies. It is also affected by outside temperature, relative humidity, passenger load, compressor speed, the number of stops, etc.

   The compressor will load depending on operating conditions.

9.3 Refrigerant

The A/C system of this vehicle has been designed to use Refrigerant 134a as a medium. Regardless of the brand, only R-134a must be used in this system. The chemical name for this refrigerant is
Ethane, 1, 1, 1, 2-Tetrafluoro.

Warning: *Refrigerant in itself is nonflammable, but if it comes in contact with an open flame, it will decompose.*

9.3.1 Procurement

Refrigerant is shipped and stored in metal cylinders. It is serviced in 30 and 100 pound (13,6 and 45 kg) cylinders. Approximately 25 pounds (11,4 kg) are used in the system.

It will be impossible to draw all the refrigerant out of the cylinder. However, the use of warm water when charging the system will assure the extraction of a maximum amount of refrigerant from the cylinder.

9.3.2 Precautions in Handling Refrigerant

1. Do not leave a cylinder of refrigerant uncapped.

2. Do not subject the cylinder to high temperatures.

3. Do not weld or steam clean on or near the system.

4. Do not fill a cylinder completely.

5. Do not discharge vapor into an area where a flame is exposed.

6. Do not expose the eyes to liquid refrigerant.

All refrigerant cylinders are shipped with a heavy metal screw cap. The purpose of the cap is to protect the valve and safety plug from damage. It is a good practice to replace the cap after each use of the cylinder for the same reason. If the cylinder is exposed to the sun's radiant heat, pressure increase resulting may cause release of the safety plug or the cylinder may burst.

For the same reason, the refrigerant cylinder should never be subjected to excessive temperature when charging a system. The refrigerant cylinder should be heated for charging purposes by placing it in 125°F (52°C) water. Never heat above 125°F (52°C) or use a blowtorch, radiator, or stove to heat the cylinder.

Welding or steam cleaning on or near any refrigerant line or components of the A/C system could build up dangerous and damaging pressures in the system.

If a small cylinder is ever filled from a large one, never fill the cylinder completely. Space should always be allowed above the liquid for expansion. Weighing cylinders before and during the transfer will determine the fullness of the cylinders.

Warning: *One of the most important precautions when handling refrigerant consists in protecting the eyes. Any liquid refrigerant which may accidentally escape is approximately -40 F (-40 C). If refrigerant comes in contact with the eyes, serious injury could result. Always wear goggles to protect the eyes when opening refrigerant connections.*

9.3.3 Treatment in Case of Injury

If liquid refrigerant comes in contact with the skin, treat the injury as if the skin was frost-bitten or frozen.

If liquid refrigerant comes in contact with the eyes, consult an eye specialist or doctor immediately. Give the following first aid treatment:

1. Do not rub the eyes. Splash eyes with cold water to gradually bring the temperature above the freezing point.

2. Apply drops of sterile mineral oil (found at any drugstore) in the eyes to reduce the possibility of infection. The mineral oil will also help in absorbing the refrigerant.

9.3.4 Precautions in Handling Refrigerant Lines

1. All metal tubing lines should be free of kinks, because of the restriction that kinks will give to the flow of refrigerant. The refrigeration capacity of the entire system can be greatly reduced by a single kink.

2. The flexible hose lines should never be allowed to come within a distance of 2-1/2 inches (6,3 cm) of the exhaust manifold.

3. Use only sealed lines from parts stock.

4. When disconnecting any fitting in the refrigeration system, the system must first be discharged of all refrigerant. However, proceed very cautiously, regardless of gauge readings. If there happens to be liquid refrigerant in the line, disconnect fittings very slowly, keeping face and hands away so that no injury can occur. If pressure is noticed when fitting is loosened, allow it to bleed off very slowly.

Warning: *Always wear safety goggles when opening refrigerant lines.*

5. In the event that any line is opened to the atmosphere, it should be immediately capped to prevent entrance of moisture and dirt.

6. The use of the proper wrenches when making connections on O-ring fittings is important. The use of improper wrenches may damage the connection. The opposing fitting should always be backed up with a wrench to prevent distortion of connection lines or components. When connecting the flexible hose connections, it is important that the swaged fitting and the flare nut, as well as the coupling to which it is attached, be held at the same time using three different wrenches to prevent turning the fitting and damaging the ground seat.

7. The O-rings and seats must be in perfect condition. The slightest burr or piece of dirt may cause a leak.

8. O-rings should be coated with refrigeration oil and installed on the line before the line is inserted into the fitting to prevent damaging the O-ringIf leaks are encountered at the couplings or connectors, no attempt should be made to correct the leaks by tightening the connections beyond the recommended torque. The O-rings are designed to seal at the specified torque and overtightening the connection does not result in a satisfactory and permanently sealed connection. The connection must be disassembled and the cause of the leak (damaged O-ring, defective lines, etc.) corrected. Use new O-ring.

9.4 Pumping Down

This procedure is intended to reduce refrigerant loss by isolating it in the compressor and the receiver tank, as well as in their connecting line, in order to carry out repairs on other sections of the air conditioning system (lines and components).

Note: *Before attempting any repair between compressor and receiver tank, use a recovery unit to remove refrigerant from the system.*

Warning: *When air conditioning system must be opened, refer to previous paragraph "PRECAUTIONS IN HANDLING REFRIGERANT" to prevent any injury.*

Procedure

1. Close the receiver tank outlet valve by turning it clockwise, backseat the suction service valve on the compressor, install an appropriate pressure gauge set, and turn the valve forward 1/4 turn to enable a visual check of the suction pressure.

2. Disconnect the *"Low Pressure Switch"* connector (mounted near the A/C compressor), and install a jumper wire.

Note: *This jumper wire will allow the clutch to remain engaged after pressure drops below 15 psi (103,5 kPa).*

3. Open the baggage compartment located at the right of the HVAC compartment door, unscrew the retaining screw on back wall of the compartment a quarter of a turn. Slide the “A/C and Heating Junction Box Sliding Drawer”. Locate the **cooling contact *3*** on the HVAC logic panel. Install a jumper wire between the central terminal of this stage and its normally-closed contact terminal as illustrated in Fig. 18. Locate the **cooling contact *2***. Install a jumper wire between the central terminal of this stage and its normally-closed contact terminal as illustrated in Fig. 18.

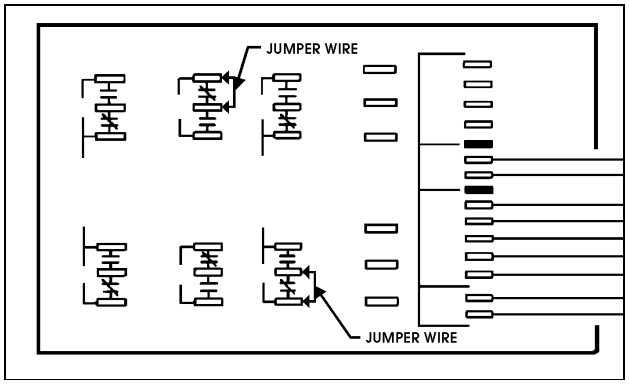

FIGURE 18: HVAC LOGIC PANEL 22038

Note: *No wire has to be disconnected. In fact, wires #31A and 31B will be connected to wire #67A. This temporary connection will restrict compressor operation to two cylinders.*

4. Start the engine, turn on the *"Main A/C-Heating"* switch, and adjust *"A/C-Heating Temperature"* controls to maximum A/C position.

5. Run the compressor until pressure reaches 1-2 psi (7-14 kPa).

Note*: During this operation, care must be taken not to fill the receiver tank over the upper sight glass. If so, stop process immediately. Always allow refrigerant piping and units to warm up to the ambient air temperature before opening system or sweating will take place inside the lines.*

6. Stop engine, and close compressor outlet valve by turning it clockwise until valve is properly seated.

7. Close compressor suction valve by turning it clockwise until it is properly seated.

9.5 Adding Refrigerant (Vapor State)

Use the suction service valve on the compressor to add a small quantity of refrigerant to the system. Backseat the valve and connect a charging line from the refrigerant cylinder to the valve loosely. Tighten connection at level of refrigerant cylinder and open tank end slightly to purge air from the charging line. Tighten the charging line at the compressor. Screw in the stem of suction valve approximately two turns. Start the engine and run at fast idle. Add sufficient refrigerant to bring the level in lower sight glass of receiver tank to mid-point. Always charge the system with the cylinder upright and the valve on top to avoid drawing liquid out of the cylinder.

Fill liquid refrigerant at the receiver tank and completely charge, if necessary, using previous procedure.

9.6 Evacuating System

1. Open both receiver valves by turning "out" (normal position).

2. Remove the caps from the two 90° adapters on the suction, discharge valves and connect two hoses to the vacuum hose.

3. Place the two compressor valves, suction and discharge, in neutral position by turning each one 3 to 4 turns "in" from the "out" position.

4. Start the vacuum pump. Open the large (suction) shutoff valve and close the small vacuum gauge valve.

5. The pressure will drop to approximately 29 inches vacuum (14.2 psi or 97,9 kPa) (the dial gauge only gives a general idea of the absolute system pressure).

6. Backseat the compressor valves by turning "out" all the way.

7. Shut down the vacuum pump.

8. Remove the hoses.

9. Reinstall the caps at the suction valve take-off points.

9.7 Charging System

When a system has been opened or if there are any questions about the air or moisture in the system, evacuate the system. Charging of an evacuated system may be accomplished by forcing liquid R-134a directly into the receiver tank.

When charging an empty system, weigh the amount of refrigerant put into the system. This will eliminate any possibility of overfilling. A fulll charge requires 24 pounds (10,9 kg).

1. Backseat the two compressor shutoff valves ("out").
2. Install the test gauges at the shutoff valves noting that the 400 psi (2758 kPa) gauge is connected to the discharge.
3. Turn in the two shutoff valves 3 to 4 turns.
4. Open the lower receiver valve by turning "out" all the way.
5. Backseat the upper receiver valve by turning out all the way.
6. Remove the cover cap from the service fitting in the top receiver valve.
7. Attach a charging hose to the R-134a tank. Open the tank valve slightly permitting R-134a to escape thus purging the hose of air.
8. Connect the charging hose to the service fitting.
9. Open the R-134a tank valve.
10. To build up pressure in the receiver tank, heat the receiver tank with a heating blanket.
11. Turn in the upper receiver valve several turns. The R-134a will now enter the system.
12. The proper charge of R-134a is 24 lbs (10.89 kg). When the scale indicates this amount of charge, backseat the receiver valve and close the R-134a tank valve.
13. Disconnect the charging hose. Replace the cover caps.
14. The system is now ready for operation.

Caution: *The evacuation of the system must be made by authorized and qualified personnel only. Refer to local laws for R-134a recuperation.*

9.8 Refrigerant System Cleanout After Compressor Failure

Although the vast majority of reciprocating refrigerant compressors manufactured today are extremely reliable, a small percentage do fail. These failures usually result in minor or extensive system contamination depending on the severity of the failure. When an open type compressor becomes damaged internally, this provokes small particles of bearings, steel, brass, copper, and aluminium and, in severe cases, carbonized oil, which could contaminate the system. To prevent repeated failures, the problem which caused the failure should be corrected, and depending upon the severity of the failure, the system should be thoroughly cleaned out using one of the cleanout procedures mentioned.

9.8.1 Determining Severity of Failure

The severity of compressor failure can be categorized as minor or major. A failure is considered minor when the contamination is limited to the compressor with little or no system contamination. A major failure, or burnout, results in extensive system contamination as well as compressor damage. Extensive system contamination can be determined by withdrawing a small sample of compressor oil and checking its color, odor and acidity. A Virginia Chemical "TKO" one step acid test kit is one of several compressor oil test kits that may be used. A high acid content would indicate a major failure or burnout. A small amount of refrigerant gas may be discharged. A characteristic burned odor would also indicate severe system contamination.

9.8.2 Cleanout after Minor Compressor Failure

1. Be sure to correct the problem which caused the failure.
2. Change liquid line filter dryer.

3. Run the unit for 2 hours on high speed cool only. If a unit with a hot gas heating system is allowed to operate in heat or defrost, the refrigerant will not all flow through the liquid line filter dryer for cleaning and some parts of the system which were not previously contaminated, may become contamined.

4. Check compressor oil level to ensure compressor is not overcharged with oil. Sometimes a significant amount of oil is pumped out of the compressor to other parts of the system when a compressor fails. This oil will return to the replacement compressor when it is started, causing an overcharge of oil in the sump of the replacement compressor. In this case, it is important that the oil level be adjusted to the proper level.

5. Withdraw a sample of the compressor oil and check its color, odor, and acidity, using instructions supplied above. If the oil is contamined, change the oil and filter dryer, and repeat the procedure until the system is clean.

9.8.3 Cleanout After Major Compressor Failure

1. Reclaim the refrigerant into a refrigerant bottle through a filter dryer to filter out contaminants.

2. Remove the failed compressor and repair it if possible.
3. Install new or repaired compressor.

4. Change the filter dryer.

5. Circulate clean R-134a with the reclaimer to clean out many of the contaminants collected in the coil valves, TXV (Thermal Expansion Valve), solenoid valves, check valves, and any other mechanical component that may have collected contaminants.

6. Evacuate and charge the system normally

7. Run the unit for 8 hours and monitor the pressure drop across the filter dryer. Also check the liquid line dryer for signs of restriction. If the pressure drop across the filter dryer exceeds 12 to 14 psig (82,75 to 96,5 kPa) with a 40°F (5°C) evaporator coil temperature, stop the unit and change the liquid line and suction line filter dryer. After 4 or 5 hours of operation, stop the unit and replace the filter dryer.

8. After 8 hours of operation, stop the unit and remove a sample of the compressor oil and check its color, odor, and acidity, using instructions supplied above. If the oil is contaminated, replace the oil and repeat step 7. If the oil is not contaminated, change the filter dryer again and replace the moisture-liquid indicator.
9. After approximately 7 days of operation, recheck the compressor oil for cleanliness and acidity.

10. A/C SYSTEM COMPONENTS

10.1 Compressor (Central System)

10.1.1 Belt Replacement

Warning: *Set the main battery disconnect switch to the "Off" position. For greater safety, set the engine starter selector switch in engine compartment to the "Off" position.*



FIGURE 19: ENGINE COMPARTMENT REAR DOOR 05035

1. Locate the belt tensioner two-way control valve (Fig. 19), and turn handle counterclockwise in order to release pressure and tension on belts.

2. Slip the old belts off and the new ones on.

Note: *Both belts must always be replaced simultaneously to ensure an equal distribution of load on each of them.*

3. Reset belt tensioning pressure control valve to 50 psi (345 kPa) to apply tension on the new belts as explained in Section 12.

10.1.2 Pulley Alignment

In order to avoid skipping, disengagement and a premature wear of compressor belt, it is necessary to align compressor pulley with the crankshaft pulley. Before performing the following procedure, release air from belt tensioners by means of the two-way control valve. After completing these procedures reset belt tensioning pressure control valve to 50 psi (345 kPa).

10.1.3 Longitudinal Compressor Alignment

1. Rest an extremity of a straight edge of approximately 46 inches (117 cm) against the upper part of the outer face of crankshaft pulley, positioning the other end close to the compressor clutch pulley (Fig. 20 and 21).

2. Check the distance between each extremity of straight edge (1. Fig. 21) and the first drive belt. If they are different, loosen the compressor support bolts and with a hammer, knock support to slide it in order to obtain the same distance, and tighten the bolts.

10.1.4 Horizontal Compressor Alignment

1. Rest an extremity of the straight edge against the upper part of the outer face of compressor pulley, positioning the other end close to the crankshaft pulley.

2. Check the distance between each extremity of straight edge (1, Fig. 21) and drive belt. If they are different, loosen the pillow block compressor bolts and with a hammer, knock compressor pillow block to slide it in order to obtain the same distance, and tighten the bolts.

10.1.5 Vertical Compressor Alignment

Rest a short "angle and level indicator" on the outer side face of the crankshaft pulley, adjust the level indicator inclination at 0° and check if the compressor pulley is at same angle (Fig. 20 & 21). If it is not the same, shim under the appropriate pillow block in order to obtain a correct angle.

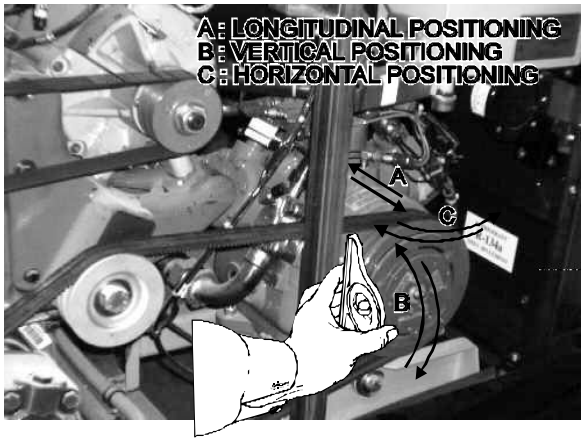

FIGURE 20: COMPRESSOR ALIGNMENT 22039

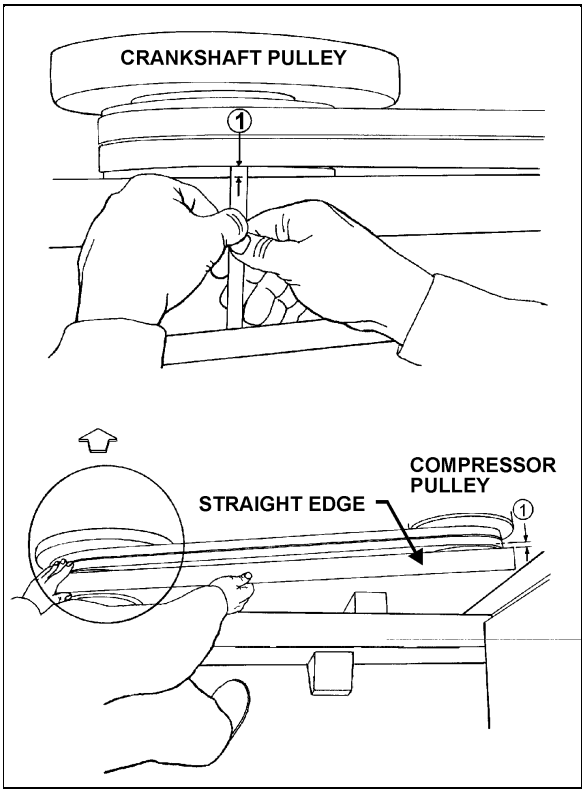

FIGURE 21: COMPRESSOR ALIGNMENT 22040

10.1.6 Compressor Maintenance

For the maintenance of the A/C compressor, see the *"Carrier Compressor Operation and Service Manual"* included at the end of this section.

Caution: *Use only Castrol SW 68 (POE) oils with refrigerant 134a.*

10.1.7 Troubleshooting Guide

A preliminary check may be made by simply feeling the cylinder heads with the unit in operation at ambient temperatures of 35°F (2°C) and over. The cylinder heads are internally divided into suction and discharge valves. The lower half of the cylinder head is the suction side, and it should be relatively cool to the touch, as opposed to the hot upper discharge side. If a valve plate or head gasket is blown, or a compressor unloader is stuck open, partially compressed refrigerant vapor will be circulated between the suction and discharge sides of the head. The affected cylinder head will then have a relatively even temperature across its surface and be neither as hot as the normal discharge temperature nor as cool as the normal suction temperature.

Broken suction valves are probably the most difficult items to detect without opening the compressor. Depending on the condition of the cylinder walls and piston rings, a compressor in good condition should be able to pull a vacuum of 20 inches Hg with the suction service valve frontseated. Failure to reach this value would require disassembly of the compressor to determine actual component conditions.

Blown Head Gaskets

Symptom:

- Loss of unit capacity at low temperature.
- Even cylinder head temperature.

Cause:

- Improperly torqued cylinder head bolts.
- Improperly positioned gasket at assembly.
- Warped cylinder head
- Severe liquid refrigerant floodback.

Blown Valve Plate Gaskets

Symptom:

- Loss of unit capacity at medium and low temperatures.
- Very hot cylinder head surface.
- Higher than normal suction pressure.

Cause:

- Improperly torqued cylinder head bolts.
- Severe liquid refrigerant floodback.
- Oil slugging caused by an overcharge of oil or flood starts.
- Discharge valves not seated properly (liquid drainback during shutdown) .

Broken Suction Valves

Symptom:

- Loss of unit capacity at all temperatures.

- Compressor unable to pull extremely low vacuum with suction service valve frontseated.

Cause:

- Repeated liquid refrigerant floodback.
- Flooded starts.
- Overcharge of oil.
- Discharge valves not seated properly (liquid drainback during shutdown).
- Expansion valve not controlling properly.

Unloader Valve Stuck Open

Symptom:

- Loss of unit capacity at all temperatures.
- Higher than normal suction pressure.
- Even cylinder head temperature.

Cause:

- Unloader body stem bent.
- Foreign material binding unloader piston or plunger.

10.2 Magnetic Clutch

Refer to Carrier service information entitled *"Housing-Mounted Electric Clutch"* at the end of this section for the description and maintenance of the magnetic clutch.

10.2.1 Time Delay Module

A time delay module integrated in the HVAC logic module is connected in series with the relay coil feeder circuit of the compressor magnetic clutch. This module allows approximately one minute delay following a compressor clutch request and its actual application, to avoid continuous engaging and disengaging (cycling) of clutch.
This time delay will be effective each time A/C system is actuated (Main A/C-Heating Switch), or upon restarting of compressor, when the latter has previously stopped due to an excessive high pressure (over 320 psi [2206,4 kPa]) or very low pressure (under 15 psi [103,5 kPa]) in the system.

However, a time delay will be inoperative and restarting of the compressor will be immediate following a regulated interruption by the system, i.e. when temperature inside the coach is equal to the selected temperature.

10.3 Condenser

The condenser coil is hinge mounted on the R.H. side of the vehicle on the A/C condenser door. Since condenser's purpose is to dissipate heat from the hot refrigerant, it is important to keep the cooling coils and fins clean. A clogged coil will cause high discharge pressure and insufficient cooling.

10.3.1 Condenser Fan Motors

Two axial fan motors are installed in condenser compartment on R.H. side of vehicle in order to ventilate the condenser coil. The fans pull outside air through the condenser coil and discharge it through an opening at bottom of compartment. Depending on pressure in receiver tank (Fig. 22), the fan motors may be operated at full rpm, half rpm or not operated at all. With low pressure in receiver tank, both fan motors are connected in series and then operate at half rpm and, with a high pressure in receiver tank, both fan motors are connected in parallel and operate at full rpm. For details about electrical wiring, refer to *"A/C and Heat system"* in the master wiring diagram.

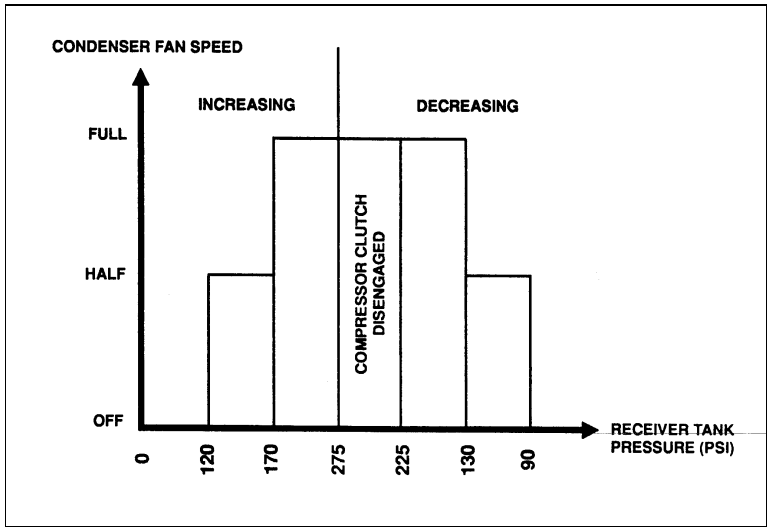

22041

FIGURE 22: CONDENSER FAN SPEED IN RELATION WITH RECEIVER TANK PRESSURE

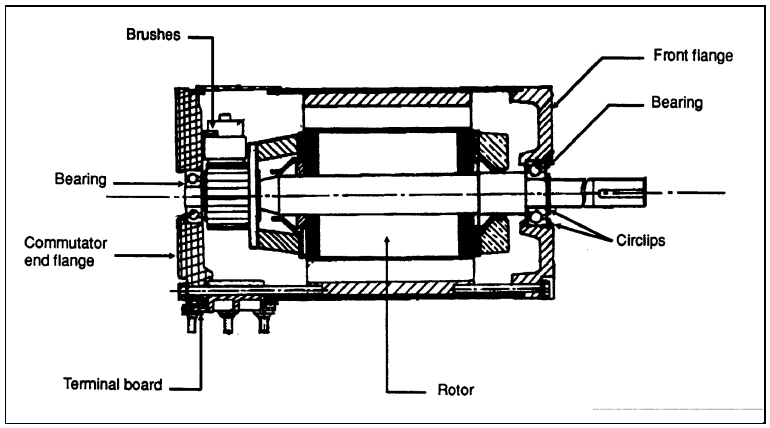

FIGURE 23: CONDENSER FAN MOTOR 22042

10.3.2 Condenser Fan Motor Removal

1. Set the main battery disconnect switch to the *"Off"* position.
2. Remove the two *"Phillips"* head screws retaining the fan motor protective cover to the square tubing.
3. Disconnect wiring from terminals on motor. Tag each wire to aid in identification at time of reconnection.
4. Support motor, and remove bolts which attach motor to mounting bracket. Remove the motor.

10.3.3 Preliminary Disassembly

1. Remove the brushes.
2. Unscrew the flange retaining screws on the shaft end side (opposite to the commutator end frame), and separate flange from frame (Fig. 23).
3. Remove flange and rotor assembly by pushing bearing shaft toward the commutator end frame.
4. Separate flange from rotor.

10.3.4 Disassembly

1. Perform preliminary disassembly.

2. Carefully note the position of the brush holder ring and the connections on the flange support.

3. Unscrew and remove the flange on the commutator end frame.

4. Remove the brush holder ring.

5. Finally, separate the following parts: brush holders, brush boxes, terminal board, bearings, etc...

10.4 Receiver tank

The receiver tank is located in the A/C condenser compartment (Fig. 24). The function of the receiver tank is to store the liquid refrigerant. During normal operation, the level of the refrigerant should be approximately at the midpoint of the lower sight glass.

In case of an extreme pressure there will be a rise in the liquid receiver tank. A pressure relief valve will break at 450 psi (3103 kPa) and relieve the receiver tank pressure.
The receiver tank incorporates an inlet valve on the inlet side (upper section) which allows the tank to be isolated or serviced. An outlet valve on the outlet side (lower section) permits complete isolation from the rest of the system.

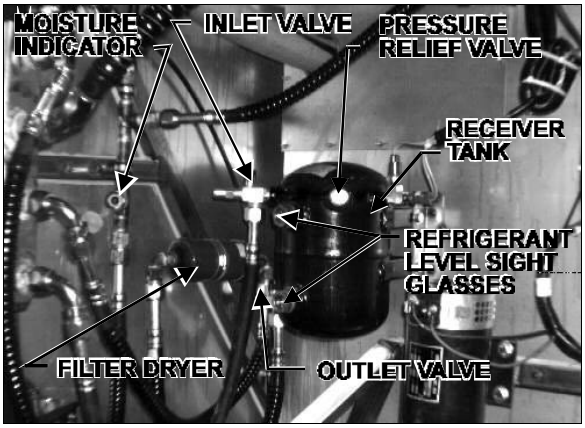

FIGURE 24: A/C CONDENSER COMPARTMENT 22043

10.5 Filter Dryer

10.5.1 Description

A filter dryer, also located in the A/C condenser compartment, is installed on the liquid refrigerant line (near the receiver tank). It is used to absorb moisture and foreign matter from refrigerant before it reaches the expansion valves.

The filter should be replaced if the system has been opened to prolonged exposure as shown by the moisture indicator sight glass.

10.5.2 Replacement

The filter is of the disposable type. When replacement is required, remove and discard the complete unit and replace with a new unit of the same type according to this procedure:

1. Isolate the refrigerant in the receiver tank by following the *"Pumping Down"* procedure stated previously.

2. Change the filter dryer as a unit.

3. Add a small quantity of refrigerant R-134a to the low side of the system. Check for leaks. Return the system to normal operation.

Caution: *Do not use carbon tetrachloride or similar solvents to clean parts. Do not use steam guns. Use mineral spirits or naphtha. All parts should be thoroughly cleaned. Use a stiff brush to wash dirt from grooves, holes, etc.*

Warning: *Cleaning products are flammable and may explode under certain conditions. Always handle in a well ventilated area.*

10.5.3 Moisture Indicator

The moisture sensitive element consists of a color changing ring which is reversible from pink to blue and vice versa as the moisture content in the refrigerant changes. Pink indicates a wet refrigerant, light violet (caution) and blue indicates a dry refrigerant.
Since temperature changes affect the solubility, color change will also vary with the refrigerant temperature. The following table shows the color change for R-134a at various moisture levels and liquid line refrigerant temperatures.

COLOR INDICATOR			
TEMPERATURE	BLUE (ppm)	LIGHT VIOLET (ppm)	PINK (ppm)
75°F (24°C)	Below 5	5-15	Above 15
100°F (38°C)	Below 10	10-30	Above 30
125°F (52°C)	Below 15	15-45	Above 45
p.p.m.= parts per million (moisture content)			

A moisture level of 15 p.p.m. for R-134a indicated in the blue color range of the above table is generally considered dry and safe. A color indication of light blue to light violet indicates the caution range of moisture level. For positive protection, the drying of the system should be continued until the color of the element turns to deep blue.
The liquid refrigerant is readily visible through the center opening of the moisture element where the presence of bubbles indicates a shortage of refrigerant or restriction in line.

Moisture is one of the main causes of chemical instability or contamination in air conditioning systems. If moisture is present, it can corrode the valves, condenser and evaporator coils, compressor and other components causing a malfunction and eventual failure of the system. Uncontrolled moisture in the system can result in very expensive multiple component replacements if not corrected at an early stage.
The moisture indicator permits an early detection of moisture in the system and when corrected by a desiccant charge, system contamination is greatly minimized.

10.6 Liquid Refrigerant Solenoid Valve

10.6.1 Description

The flow of liquid refrigerant to the driver's evaporator is controlled by a normally-closed solenoid valve located on the ceiling of the spare wheel and tire compartment and is accessible through the reclining bumper (Fig. 17).

10.6.2 Manual Bypass

This type of solenoid valve is equipped with a manual operating stem. The 3/16 inch square stem located on the bonnet is exposed when the seal cap is removed. To manually open valve, turn stem 1/2 turn counterclockwise. To manually close valve, turn stem clockwise until tight against seat. Manual stem must be in closed position for automatic electric operation.

10.6.3 Coil Replacement

1. Disconnect connector from the coil connector.

2. Take out the retaining screw at the top of the coil housing. The entire coil assembly can then be lifted off the enclosing tube.

3. Place the new coil and yoke assembly on the enclosing tube. Lay data identification plate in place.

4. Insert the coil retaining screw, rotate housing to proper position and tighten screw securely.

5. Connect connector from coil connector.

10.6.4 Valve Disassembly

1. Remove the coil as stated previously.

2. Pump down the system as stated earlier in this section.

3. Remove the four socket head screws which hold the body and bonnet together (Fig. 25).

4. Carefully lift off the bonnet assembly (upper part of the valve) so that plunger will not fall out. The diaphragm can now be lifted out.

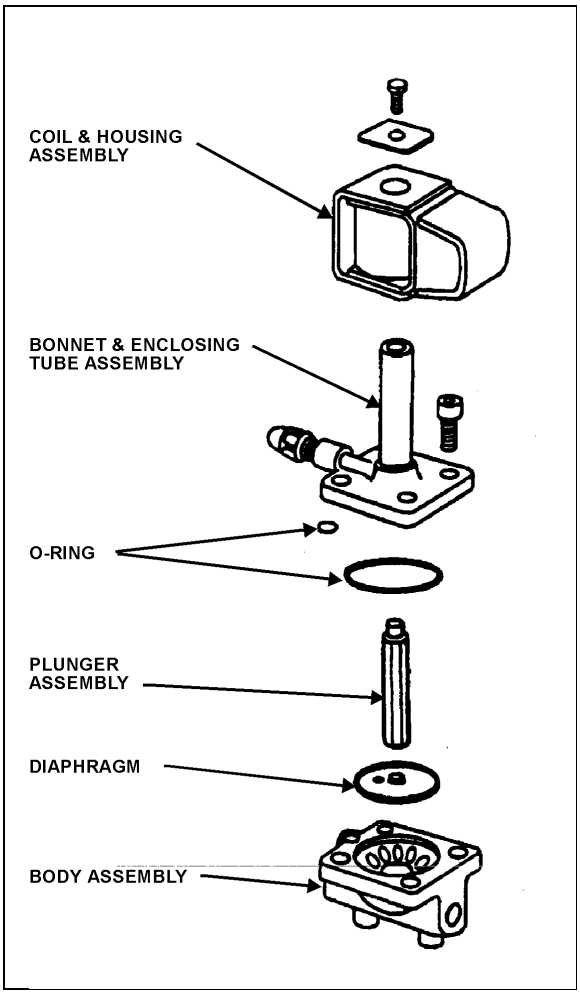

FIGURE 25: REFRIGERANT SOLENOID VALVE 22044

Note: *The above procedure must be followed before brazing solder-type bodies into the line.*

Caution: *Be careful not to damage the machined faces while the valve is apart.*

10.6.5 Valve Reassembly

1. Place the diaphragm in the body with the pilot port extension up.

2. Hold the plunger with the synthetic seat against the pilot port.

3. Make sure the bonnet O-rings are in place. Lower the bonnet assembly over the plunger, making sure that the locating sleeve in the bonnet enters the mating hole in the body.

4. Insert the four socket head screws and tighten evenly.

5. Replace the coil as stated previously.

6. Add a small quantity of refrigerant R-134a to the low side of the system. Check for leaks. Return the system to normal operation.

10.7 HUMIDISTAT

10.7.1 Description

This control, which is frequently used in houses, activates a humidifier in cases where the humidity rate of ambient air in the house is lower than the rate selected manually on the humidistat. The same control is used on this vehicle, with the exception that the inside ambient air of the vehicle must be dried when the humidity rate is too high. To do so, the signal transmitted by the humidistat is reversed by the use of the HVAC control module.

Air is dried by activating **Cooling contact 1** on the HVAC logic panel. Thus, the humidistat is a control which enables the bypass of the A/C system control to activate the A/C compressor. In practice, this means that when the heating system is operating, the A/C system can also operate simultaneously. A yellow LED mounted on the HVAC control module will be turned on to indicate a dehumidifying request (for location, refer to previous heading *"Humidistat Yellow LED"*). The humidistat is located in the HVAC compartment, in the center of the rear wall.

Air is dried by activating **Cooling contact 1** on the HVAC logic panel. Thus, the humidistat is a control which enables the bypass of the A/C system control to activate the A/C compressor. In practice, this means that when the heating system is operating, the A/C system can also operate simultaneously. A yellow LED mounted on the HVAC control module will be turned on to indicate a dehumidifying request (for location, refer to previous heading *"Humidistat Yellow LED"*). The humidistat is located in the HVAC compartment, in the center of the rear wall.

Note: Even if the dehumidifying function is requested, cooling contact 1 on the HVAC logic panel will not turn on as long as the ambient temperature inside the vehicle is over 4 F (2 C) from the selected temperature with "Main A/C - Heating Temperature" control.

10.7.2 Setting

As a reminder, the humidistat, which is mounted in center of rear wall of the HVAC compartment, should be set to 30%. This setting allows passengers to be comfortable and furthermore avoids unnecessary loading of A/C compressor.But, in areas where during transitional seasons, the temperature fluctates 23° and 50°F (-5° and 10°C) with a high degree of humidity, lower the the humidistat to 15% to prevent windshield fogging. Do not forget to reset humidistat to 30% once this period is over.

10.7.3 Checkout

1. Turn the control knob of the humidistat counterclockwise to the *"Off"* position.

2. Start engine, then switch on the *"Main A/C-Heating"* switch.

3. Turn the *"Main A/C - Heating Temperature"* control clockwise to its maximum heating position. The red LED located on the lower console should illuminate to indicate operation of the heating system.

4. Then, **slowly** turn the *"Main A/C - Heating Temperature"* control counterclockwise until the green LED located on the lower console also illuminates (red LED should remain illuminated) to indicate the dehumidifying request.

5. Turn the control knob of the humidistat to its maximum clockwise position; the green LED on the lower console should turn off.

6. Reset humidistat control.

10.7.4 Maintenance

Do not apply oil to any part of the humidistat. To Ensure trouble-free performance, the nylon element should be inspected periodically. Dirt and grease will not damage the element, but may reduce its sensitivity. If necessary, remove accumulated dust and dirt with a soft bristled brush.

10.8 Expansion Valve

10.8.1 Main System

The expansion valve for the main system is a thermo-sensitive valve with a remote control bulb head attached to the evaporator outlet line and is accessible by the evaporator filter access door (Fig. 17 and 26). The valve regulates the flow of refrigerant liquid into the evaporator coils and is controlled by the suction gas temperature leaving the evaporator. The bulb head senses the refrigerant gas temperature as it leaves the evaporator. High temperature will cause expansion and pressure on the power head and spring. Such action causes the assembly valve to open, allowing a flow of refrigerant liquid into the evaporator.

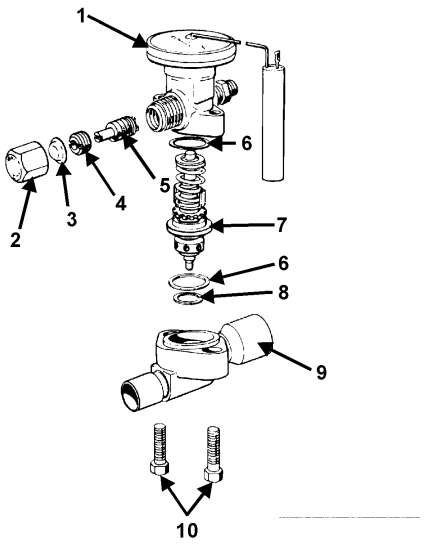

1. POWER ELEMENT
2. CAP-SEAL NUT
3. BONNET-SEAL (FLARE)
4. PACKING NUT
5. ADJUSTING STEM & PACKING ASSY
6. BODY FLANGE GASKET
7. CAGE ASSY
8. SEAT GASKET
9. BODY FLANGE
10. CAPSCREWS

FIGURE 26: EXPANSION VALVE 22045

The remote bulb and power assembly is a closed system. The pressure within the remote bulb and power assembly corresponds to the saturation pressure of the refrigerant temperature leaving the evaporator and moves the valve pin in the opening direction.

Opposed to this force, on the under side of the diaphragm and acting in the closing direction, is the force exerted by the superheat spring. As the temperature of the refrigerant gas at the evaporator outlet increases above the saturation temperature corresponding to the evaporator pressure, it becomes superheated. The pressure thus generated in the remote bulb and power assembly surpasses the combined pressures of the evaporator pressure and the superheat spring, causing the valve pin to move in the opening direction. Conversely, as the temperature of the refrigerant gas leaving the evaporator decreases, the pressure in the remote bulb and power assembly also decreases and the combined evaporator and spring pressures cause the valve pin to move in the closing position.

As the operating superheat is raised, the evaporator capacity decreases, since more of the evaporator surface is required to produce the superheat necessary to open the valve. It is obvious, then, that it is most important to adjust the operating superheat correctly and that a minimum change in superheat to move the valve pin to full open position, is of vital importance because it provides savings in both initial evaporator cost of operation. Accurate and sensitive control of the refrigerant liquid flowing to the evaporator is necessary to provide maximum evaporator capacity under load conditions. The spring is adjusted to give 8 to 12°F (-13,3 to -11,1°C) of superheat at the evaporator outlet. This ensures that the refrigerant leaving the evaporator is in a completely gaseous state when drawn into the suction side of the compressor. Liquid would damage the compressor valve, piston and heads if allowed to return in the suction line.

A vapor is said to be superheated when its temperature is higher than the saturation temperature corresponding to its pressure. The amount of the superheat is, of course, the temperature increase above the saturation temperature at the existing pressure.

As the refrigerant moves along in the evaporator, the liquid boils off into a vapor and the amount of liquid decreases until all the liquid has evaporated due to the absorption of a quantity of heat from the surrounding atmosphere equal to the latent heat of vaporization of the refrigerant. The gas continues along in the evaporator and remains at the same pressure. However, its temperature increases due to the continued absorption of heat from the surrounding atmosphere. The degree to which the gas refrigerant is superheated is related to the amount of refrigerant being fed to the evaporator and the load to which the evaporator is exposed.

Superheat Adjustment

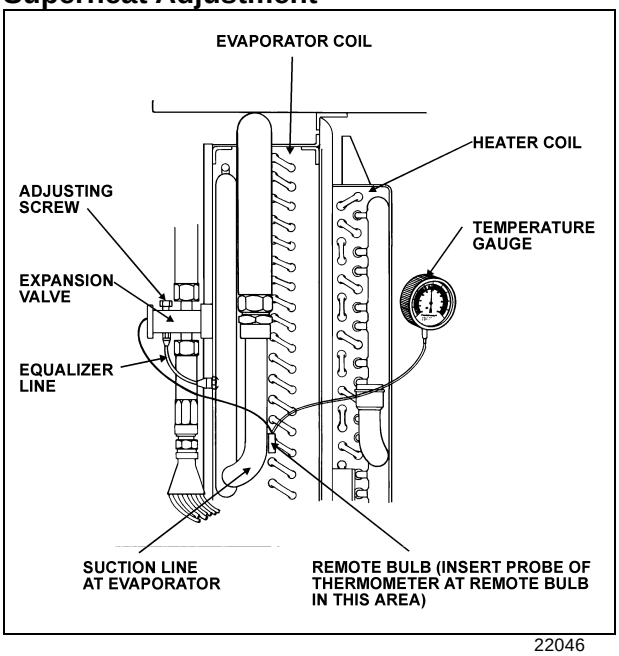

22046

FIGURE 27: SUPERHEAT ADJUSTMENT INSTALLATION

The easiest method of adjusting the superheat is to backseat the main evaporator expansion valve adjusting screw, and screw in 5-1/2 turns clockwise (refer to Fig. 27). If this method does not provide an accurate superheat, the following procedure should be followed:

1. Operate coach for at least one-half hour at fast idle with temperature control set at 82°F (27,7°C).

2. Install pressure gauge at the evaporator suction header.

3. Install a remote reading thermometer to the evaporator outlet line near the existing remote bulb (refer to Fig. 27).

4. Apply thermostatic tape around the bulb and evaporator outlet line to get a true reading of the line temperature.

5. Check approximately 5 readings of pressure at 2-minute intervals and convert to temperature using the temperature pressure (page 43). Likewise check the temperature reading at the remote bulb at the same 2-minute intervals and record the low and high swing readings of the needle (refer to Fig. 28).

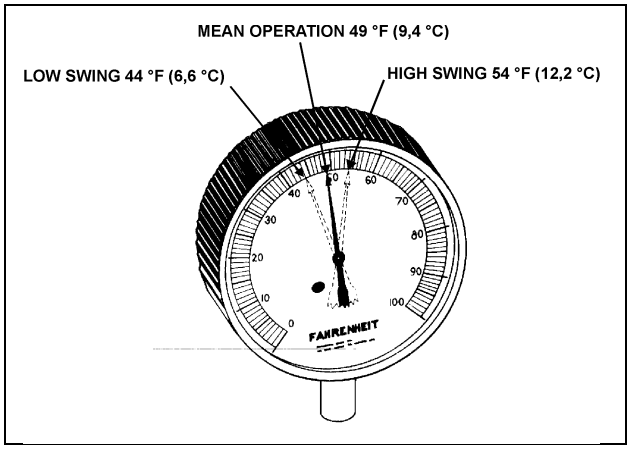

22047

FIGURE 28: HIGH & LOW SWING TEMPERATURE AT REMOTE BULB

EXAMPLE OF READINGS TAKEN (Fig. 28):

A/C pressure gauge converted to temperature at expansion valve fitting	Temperature on remote bulb	
40°F(4,4°C)	Low swing 44°F (6,6°C)	High swing 54°F (12,2°C)
Formula for superheat 49°F-40°F=9°F (9,4°C-4,4°C=5°C)	Average of low and high swing is 49°F (9,4°C)	

Note: *The low swing of the superheat should be a minimum of 4 F (2,2 C) higher at the remote bulb and have an average of 8 to 12 F (4 to 6 C) higher range at the bulb than the fitting at the expansion valve.*

Note: *To lower evaporator temperature or reduce the superheat, flow of refrigerant is increased by turning adjusting screw of expansion valve counterclockwise. To increase temperature or increase superheat, flow of refrigerant is reduced by turning adjustment screw of expansion valve clockwise.*

6. Regulate suction pressure to temperature reading according to temperature chart or to the 134a temperature scale on the pressure gauge.

Example: Suction pressure 30 psi (207 kPa) converted to 32°F (0°C) on chart. If temperature reading is 40°F (4,4°C), subtract 32°F (0°C) and the result will be 8°F (4,4°C) of superheat.

Caution: *Before proceeding to the expansion valve adjustment, check for restriction on suction side for plugged filter dryer and partially open valves. These conditions will give a high superheat.*

Maintenance

1. Pump down the system as previously indicated in this section.

2. Disconnect the external equalizer line from the under side of the power head, and unclamp the remote control bulb from the evaporator coil outlet line.

3. Remove the two cap screws holding the power assembly to the valve body flange. Lift off the power assembly and remove the cage assembly.

4. When reassembling, replace with the new gaskets in proper location. Make sure the two lugs on the cage assembly fit into grooves provided in the power assembly. Do not force the valves together. The cage must fit properly before tightening the body flange. Tighten bolts evenly.

5. Check for leaks.

Safety Intructions

1. Make sure the valve is installed with the flow arrow on the valve body corresponding to the flow direction through the piping system.

2. Before opening any system, make sure the pressure in the system is brought to and remains at the atmospheric pressure. Failure to comply may result in system damage and/or personal injury.

10.8.2 Driver's System

The function and operation of the expansion valve for the driver's system are similar to the main system, but no superheat adjustment is required (see fig. 17).

10.9 Torch Brazing

Use an electrode with 35% silver.

Caution: *When using heat near a valve, wrap with a water saturated rag to prevent overheating of vital parts.*

Warning: *Before welding any part of refrigeration system, make sure the area is well ventilated.*

10.10 Troubleshooting

10.10.1 Expansion Valve

PROBABLE CAUSE	PROBABLE REMEDY
LOW SUCTION PRESSURE-HIGH SUPERHEAT	
Expansion Valve Limiting Flow.	Adjust and/or test expansion valve.
Gas in liquid line due to pressure drop in the line or insufficient refrigerant charge.	Locate cause of line flash and correct by use of any of the following methods. Add R-134a. Replace or clean filter dryer.
Inlet pressure too low from excessive vertical lift, undersize liquid line or excessive low condensing temperature. Resulting pressure difference across valve too small.	Increase head pressure. If liquid line is too small, replace with proper size.
Gas in liquid line due to pressure drop in line or insufficient refrigerant charge.	Locate cause of liquid line flash and correct by use of any of the following methods. Add R-134a. Replace or clean filter dryer. Check for proper line size.
Superheat adjustment too high.	Adjust superheat as outlined under "Superheat Adjustment".
Power assembly failure or partial loss of charge.	Replace power assembly or replace valve.
Air filter screen clogged.	Clean or replace air filter screen.
Plugged lines.	Clean, repair or replace lines.
Liquid line too small.	Install proper size liquid line.
Suction line too small.	Install proper size suction line.
LOW SUCTION PRESSURE-LOW SUPERHEAT	
Uneven or inadequate evaporator loading due to poor air distribution or liquid flow.	Balance evaporator load distribution by providing correct air or liquid distribution.
HIGH SUCTION PRESSURE-HIGH SUPERHEAT	
Compressor discharge valve leaking.	Replace or repair valve.
HIGH SUCTION PRESSURE-LOW SUPERHEAT (DEFECTIVE UNLOADER)	
Valve superheat setting too low.	Adjust superheat as outlined under "Superheat Adjustment".
Compressor discharge valves leaking.	Replace or repair discharge valve.
Incorrect superheat adjustment.	Superheat adjustment 8 to 12°F (4 to 6°C).

PROBABLE CAUSE	PROBABLE REMEDY
FLUCTUATING DISCHARGE PRESSURE	
Insufficient charge.	Add R-134a to system.
HIGH DISCHARGE PRESSURE	
Air or non-condensable gases in condenser.	Purge and recharge system.
Overcharge or refrigerant.	Bleed to proper charge.
Condenser dirty.	Clean condenser.
Insufficient cooling air distribution over air cooled condenser.	Properly locate condenser to freely dispel hot discharge air.

10.10.2 A/C

Use this A/C troubleshooting chart with paragraph "10.11 Temperature & Pressure".

TROUBLE	CAUSE
Low suction pressure and frosting at dryer outlet.	Clogged filter.
Low Oil Level.	Check for oil leaks and for leaking oil seal. Do not attempt to check oil level unless system has been stabilized at least 20 minutes.
Excessively cold suction line.	Loss of contact between the expansion valve bulb and the suction line or sticking of the expansion valve. Check for foreign matter and clean, repair or replace the valve.
Excessively cold suction line and noisy compressor.	Check superheat adjustment. Check remote bulb contact. Check expansion valve for sticking.
compressor squeaks or squeals when running.	Check oil level. Replace oil seal.
Noisy or knocking compressor.	Check for broken internal parts. Overhaul if required.
Compressor vibrates.	Check and tighten compressor mounting bolts.
Low refrigerant level	Check for refrigerant leaks and add refrigerant if required.
Suction pressure rises faster than 5 pounds per minute after shutdown.	Check compressor valve for breakage or damage.
Insufficient cooling.	Check for refrigerant leaks. Check condition of filter screens and motors.
Insufficient air flow.	Dirty or iced evaporator. Dirty air filter. Blowers inactive. Clogged ducts.
No flow of refrigerant through expansion valve.	Filter dryer is clogged. Remote bulb has lost charge or expansion valve is defective.
Expansion valve hisses. Bubbles in moisture and liquid indicator.	Gas in liquid line. Add refrigerant.

TROUBLE	CAUSE
Superheat too high.	Reset superheat adjustment. Check for clogged external equalizer line, or filter dryer.
Reduced air flow: a. Dirty or clogged air filter; b. Evaporator motor inoperative; or c. Plugged return air ducts.	Dirty or iced evaporator coil. Clean air filter screen. Check return ducts for obstructions. Check blower motor.
Frequent startings and stoppings on low pressure control switch.	Lack of refrigerant. Check for leaks. Recharge.
Compressor intermittently starts and stops.	Intermittent contact in electrical control circuit. Compressor valves not in operating position.
Non-condensable in the refrigeration system.	Leak on system, system in vacuum in low temp.. Specific symptom, pressure in system will not correspond to ambient temperature on shutdown. Only non-condensable will cause this. (Example: Pressure of idle R-134a system in 80°F (26,6°C) room should be 86.4 psi (595.7 kPa). See temperature chart in this section.) An evaporator just does a proper cooling job without sufficient air. Shortage of air can be caused by the following: • Dirty filters; or • Dirty coils.

Testing condenser pressure.

***Note*:** *R-134A pressure is function of the temperature variation.*

Example, for an exterior temperature of 100°F.
Exterior temperature (100°F) + 30°F = 130°F. Refer to paragraph "10.11 Temperature & Pressure".
Note the corresponding pressure for a temperature of 130°F, 199.8 psi.
Read the condenser pressure, example 171.9 psi.
171.9 psi ‹ 199.8 psi, the pressure in the condenser is inferior to the pressure corresponding to the exterior temperature, then condenser pressure may be to low. Check for refrigerant leaks and add refrigerant if necessary. If the pressure corresponding to the condenser temperature is superior to the pressure corresponding to the exterior temperature, then air cooled condenser pressure may be to high. Most frequent causes are:

Reduced air quantity. This may be due to:

- Non-condensable in system;
- Dirt on the coil;
- Restricted air inlet or outlet;
- Dirty fan blades;
- Incorrect rotation of fan;
- Fan speed too low;
- Fan motor going out on overload; or
- Prevailing winds.
- Too much refrigerant in system. Remove refrigerant if necessary.

10.11 Temperatures & Pressures

VAPOR-PRESSURE R134A			
TEMPERATURE		PRESSURE	
°F	°C	psi	kPa
-100	-73.3	27.8	191.7
-90	-67.8	26.9	185.5
-80	-62.2	25.6	176.5
VAPOR-PRESSURE			
TEMPERATURE		**PRESSURE**	
°F	**°C**	**psi**	**kPa**
-70	-56.7	23.8	164.1
-60	-51.1	21.5	148.2
-50	-45.6	18.5	127.6
-40	-40.0	14.7	101.4
-30	-34.4	9.8	67.6
-20	-29	3.8	26.2
-10	-23	1.8	12.4
0	-18	6.3	43.4
10	-12	11.6	80
20	-7	18.0	124.1
30	-1	25.6	176.5
40	4	34.5	237.9
50	10	44.9	309.6
60	16	56.9	392.3
70	21.1	70.7	487.5
80	27	86.4	595.7
90	32.2	104.2	718.5
100	38	124.3	857.0
110	43.3	146.8	1012.2
120	49	171.9	1185.3
130	54.4	199.8	1377.6
140	60	230.5	1589.3
150	65.6	264.4	1823.0
160	71	301.5	2078.8
170	76.7	342.0	2358.1
180	82.2	385.9	2660.8
190	87.8	433.6	2989.7
200	93.3	485.0	3344.1
210	98.9	540.3	3725.4

10.12 Leak Testing

Some methods such as nitrogen pressure and soap, and electronic sniffer can be used for leak testing. However, the most common method used is a "Halide" torch consisting of an acetylene tank, a burner and a suction test hose. Proceed as follows:

Warning: *Do not inhale fumes from leak detector.*

The flow of acetylene to the burner causes a suction in the test line. Any gas refrigerant present will be drawn through the hose and into the burner where it decomposes into free acids.

These acids come in contact with the hot copper reaction plate in the burner, causing color reaction in the flame. A small concentration is indicated by a green tint and a large concentration by an intense blue. Do not confuse this change in color with the change caused by shutting off the air supply through the hose by holding the end too close to an object.

The procedure for testing is:

1. Adjust flame so that the top of the cone is approximately level or within one-half inch above the plate.

2. Probe end of suction test tube around all joints, valves, etc. When a leak has been found at a soldered joint, that section of the system must be pumped down. Do not solder as pressure will force hot solder out. If the system is empty, it is more economical to put in just enough R-134a to produce about 15 psi (103 kPa). The pressure can be raised to about 150 psi (1034 kPa) with dry nitrogen.

Note: *This gas is put into the suction and discharge shutoff valves at the compressor. The receiver valves must be opened. If no leaks are found, dump this mixture, evacuate the system and fill with refrigerant.*

11. HEATING SYSTEM

11.1 Description

The schematic of Figure 29 shows the heating system and its components.

In addition to the normal heating provided by the engine, an optional preheating system (40,000 Btu/hr or 80,000 Btu/hr) may have been installed in the rear electric compartment.

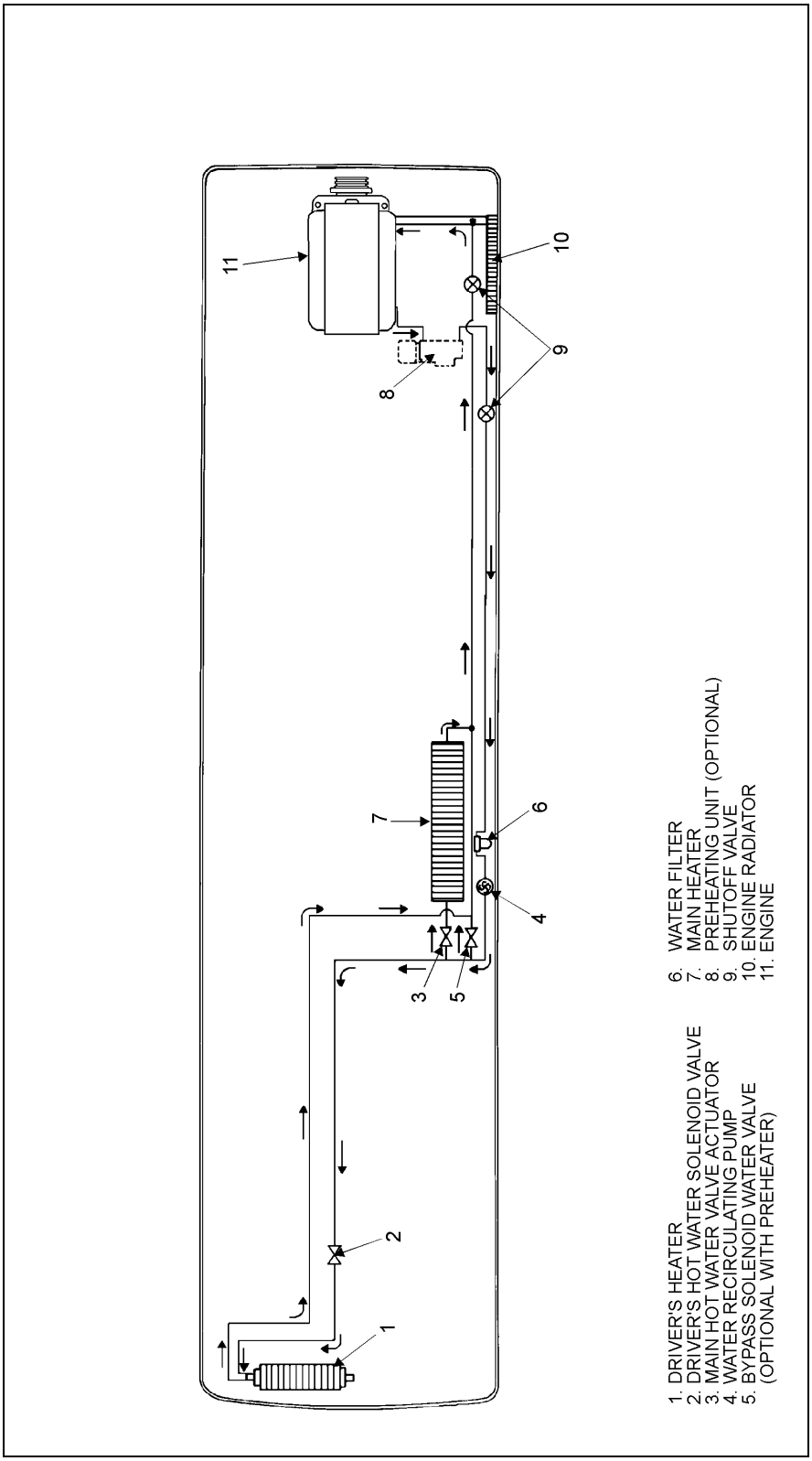

FIGURE 29: HEATING SYSTEM COMPONENTS 22048

11.2 Draining Heating System

To drain the entire system, refer to Section 05, *"Cooling"*. If only the driver's or main heater core must be drained, refer to the following instructions.

11.2.1 Driver's Heater Core

1. Stop engine and allow engine coolant to cool.

2. Locate the normally open water solenoid valve on the ceiling of the spare wheel compartment (Fig. 30), disconnect its wiring connector, then connect a 24-volt external power source, using jumper cables, to close valve.

Warning: *Before proceeding with the following steps, check that coolant has cooled down.*

3. Loosen hose clamp, install an appropriate container to recover coolant, and disconnect silicone hose from water solenoid valve.

4. From inside of vehicle, open the manual vent on the coolant inlet line near the driver's unit (Fig. 31) to ensure an efficient draining.



22049

FIGURE 30: CEILING OF THE SPARE WHEEL COMPARTMENT

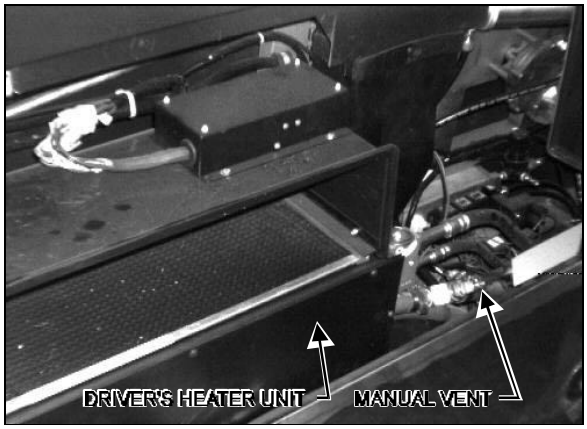

FIGURE 31: DRIVER'S HVAC UNIT 22050

11.2.2 Main Heater Core

1. Stop engine and allow engine coolant to cool.

2. Close both heater line shutoff valves. One is located in the engine compartment under the radiator fan gearbox, while the other one is located in the L.H. rear electric compartment near the preheater. Refer to 12.6 Preheater System of this section to gain access to the heater line shutoff valve.

3. Open the last L.H. side baggage compartment door, then pull the black release button located on the L.H. side in order to unlock and open the HVAC compartment door.

Warning: *Before proceeding with the following step, check that coolant has cooled down.*

4. Open drain cock in bottom of heater core, then open manual vent located on top of heater core (Fig. 32) in order to allow air to enter while draining.

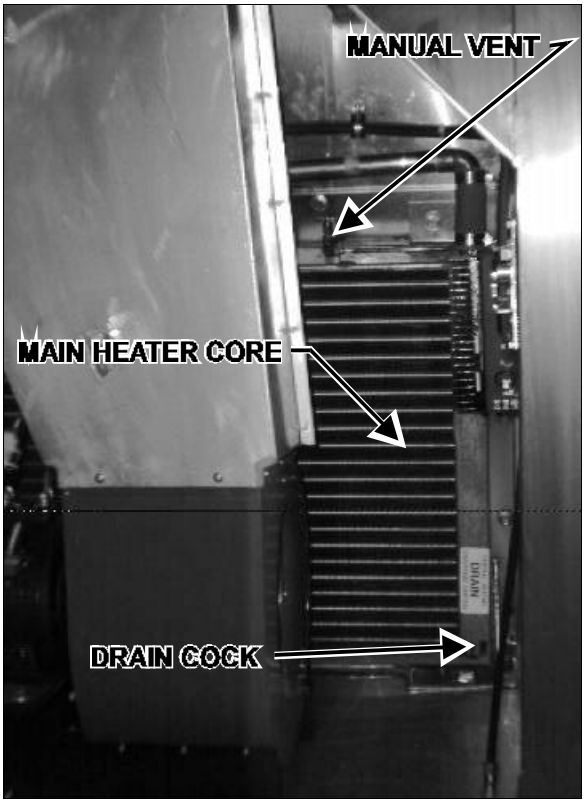

FIGURE 32: HVAC COMPARTMENT 22051

11.3 Filling Heating System

1. Ensure that the drain hose is reconnected and the manual vents and drain cock are closed.

2. Open the surge tank filler cap and slowly fill the system to level of filler neck.

3. After initial filling, the water valves should be open and the water recirculating pump should be energized to assist in circulating coolant through the heating system. To perform this operation, start the engine, switch on the *"Main A/C-Heating"* switch, and turn the *"Main and Driver's A/C-Heating Temperature"* controls clockwise to their maximum positions in order to request the heating mode in each of these sections.

4. When coolant level drops below the surge tank filler neck, slowly fill the system to level of filler neck.

5. Once the level has been stabilized, replace surge tank filler cap.

11.4 Bleeding Heating System

Whenever the heating system has been drained and refilled, or the system has run low on coolant and coolant has been added, it is necessary to bleed air from heating system. Locate the manual vents illustrated in Figures 31 and 32, and open them momentarily until no air escapes from the lines.

11.5 Soldering

Before soldering any part of the system, make sure the area is well ventilated. Use (stay clean) flux sparingly and apply solder (95-5 round wire 1/8 inch [3,1 mm]). After completing repairs, test for leaks.

When using heat at or near a valve, wrap with a water saturated rag to prevent overheating of vital parts.

12. HEATING SYSTEM COMPONENTS

12.1 Driver's Water valve

12.1.1 Description

A two-way normally open, internal pilot-operated solenoid valve designed for smooth closing is used to control the coolant flow through the driver's heating unit. It is mounted on the coolant inlet line of the driver's heating unit, and is accessible through the spare wheel compartment (see fig. 29). The valve cannot be manually bypassed.

12.1.2 Improper Operation

1. Faulty control circuit: Check the electric system by energizing the solenoid. A metallic clicking noise indicates that the solenoid is operating. Absence of clicking indicates a loss of power or a defective solenoid. Check for open breaker, open-circuited or grounded coil, broken lead wires.

2. Burned-out coil: Check for open-circuited coil. Replace coil if necessary.

3. Low voltage: Check voltage across the coil leads. Voltage must be at least 85% of nameplate rating.

4. Excessive leakage: Disassemble valve and clean all parts. Replace worn or damaged parts with a complete spare part kit for best results.

12.1.3 Coil Replacement

Turn off electrical power supply and disconnect lead wires. Proceed in the following manner:

1. Remove retaining cap or clip, spacer, name plate and housing.

2. Slip spring washer, insulating washer, coil and insulating washer off the solenoid base sub-assembly. Insulating washers are omitted when a molded coil is used.

3. Coil is now accessible for replacement. Reassemble by reversing sequence of disassembly. Refer to exploded view (Fig. 33) for identification and location of parts.

Note: *Solenoid must be completely reassembled, as the housing and internal parts complete the magnetic circuit.*

Caution: *When metal retaining clip disengages, it will spring upwards.*

12.1.4 Valve Disassembly

1. Drain driver's heating unit as previously explained in this section under paragraph *"Draining Heating System"*.

2. Disconnect connector from coil connector.

3. Disassemble valve in an orderly fashion paying careful attention to exploded view (Fig. 33) provided for identification of parts.

4. Remove retaining cap and slip the entire solenoid enclosure off the solenoid base subassembly.

Caution: *When metal retaining clip disengages, it will spring upwards.*

5. Unscrew solenoid base sub-assembly and remove core, plugnut gasket, plugnut assembly and solenoid base gasket.

6. Remove the four bonnet screws and valve bonnet, disc holder subassembly, disc holder spring, diaphragm/spring subassembly and body gasket.

7. All parts are now accessible for cleaning or replacement. Replace worn or damaged parts with a complete spare part kit for best results.

Caution: *Do not damage valve seat in any manner, as its sealing feature will be affected, thus resulting in continuous leakage.*

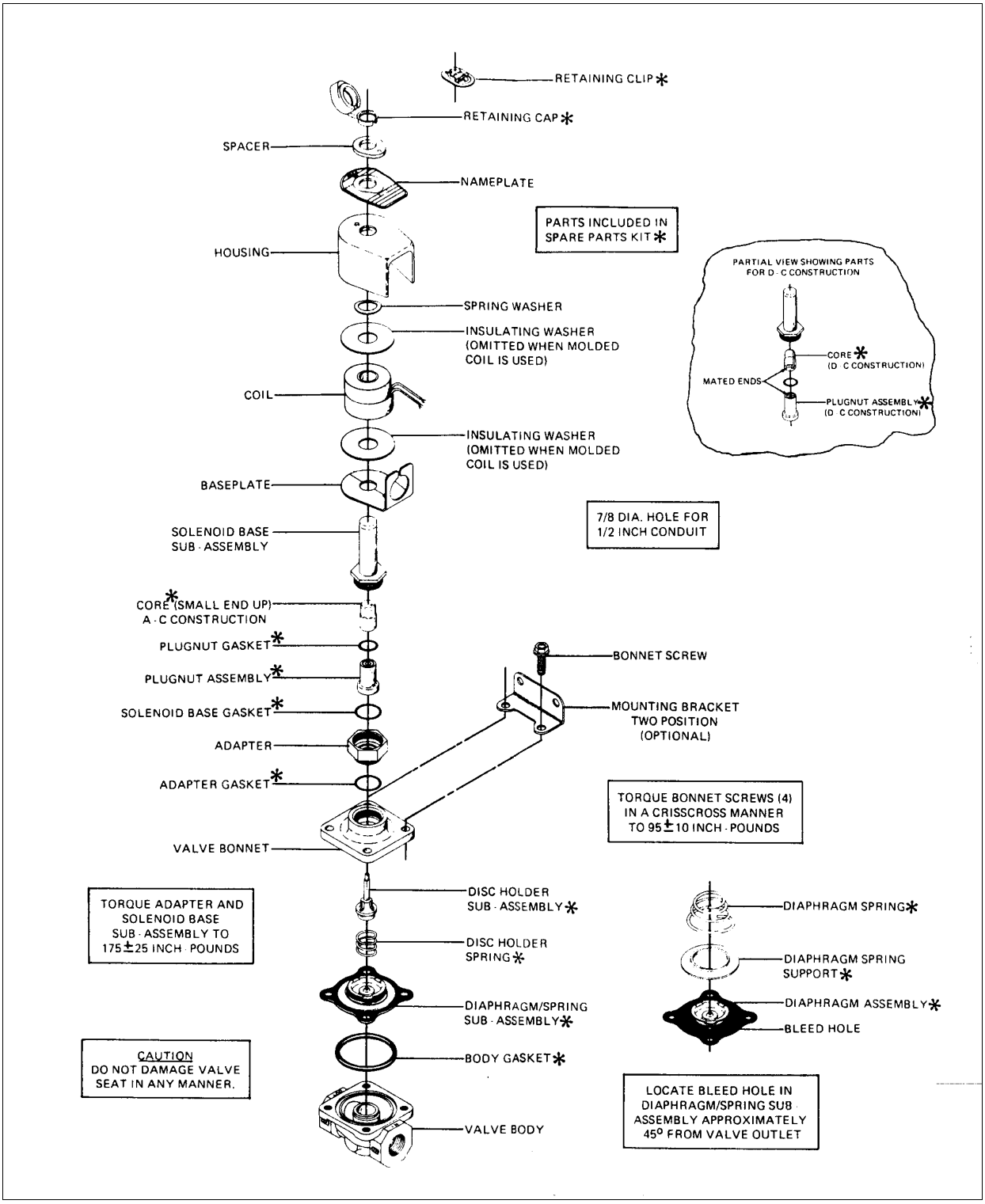

FIGURE 33: DRIVER'S WATER SOLENOID VALVE 22052

12.1.5 Valve Reassembly

1. Reassemble in reverse order of disassembly paying careful attention to exploded view provided for identification and placement of parts (Fig. 33).

2. Replace body gasket and diaphragm/spring subassembly. Locate bleed hole in diaphragm/spring subassembly approximately 45° from valve outlet.

3. Replace disc holder spring and holder subassembly.

4. Replace valve bonnet screws. Torque bonnet screws in a criss-cross manner to 95 ± 10 inch-pounds.

5. Install solenoid base gasket, plugnut assembly and plugnut gasket. Position core (small end up for A-C construction) on plugnut assembly. For D-C construction, be sure plugnut assembly and core are installed with mated ends together.

6. Replace solenoid base subassembly and torque to 175 ± 25 inch-pounds.

7. Replace solenoid enclosure and retaining cap or clip. Reconnect the coil connector.

8. Refill heating system as previously stated under paragraph *"Filling Heating System"*, then bleed air from the driver's heating unit as stated previously under paragraph *"Bleeding heating system*

9. After maintenance, operate the valve a few times to be sure of proper opening and closing.

Note: *Should diaphragm/spring subassembly become disassembled, be sure to replace the diaphragm/spring support with lip facing upward towards the valve bonnet.*

12.2 Main Hot Water Solenoid Valve Actuator

12.2.1 Description

The flow of hot water to the vehicle main heater core is controlled by an electric water valve. The valve is located in the HVAC compartment (Fig. 29 and 34). This valve is self-adjusting and linear motorized.

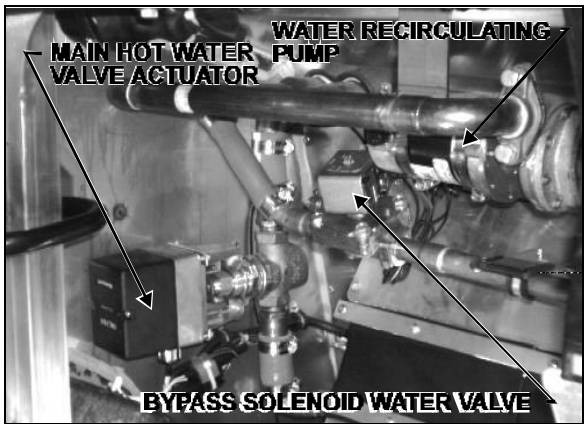

FIGURE 34: HVAC COMPARTMENT 22053

If leakage occurs after several years of operation, check stem and seat for wear. If either is worn, completely rebuild the valve, replacing all parts subject to wear. This normally includes replacing packing, stem, disc, internal springs, seats or seat rings, O-rings, and gaskets as applicable to the valve being rebuilt.

Any valve with a stem in good condition may be repacked without further repair. It is not necessary to remove the bonnet to repack the valve. Great care should be taken not to damage the valve stem or cause leakage after the packing is installed.

After repairing, use pipe sealing compound or tape on bonnet threads and threaded piping connections. Restore hot water pressure to test for leaks before reinstalling actuator. Remember that pressure forces the valve open during testing when actuator is off. Reinstall the actuator and check operation to be certain valve closes completely against normal operating pressures.

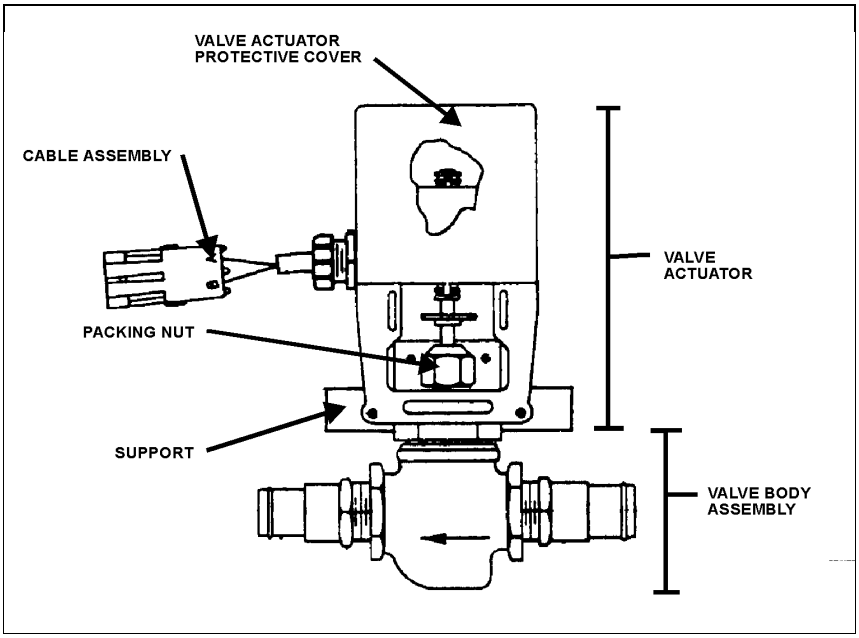

FIGURE 35: MAIN HOT WATER SOLENOID VALVE 22054

12.2.2 Valve Actuator Removal (Figure 35)

1. Stop engine and allow coolant to cool.

2. Close shutoff valve on the line located in the rear electric compartment to relieve water pressure from system. Refer to 12.6 Preheater System of this section to gain access to the heater line shutoff valve.

3. Disconnect cables and the fresh air sensor. Remove the main hot water solenoid valve actuator from the line by removing connectors at pipe outlets and removing screws on the support.

4. Remove the two screws retaining the valve actuator protective cover.

5. Remove the four screws retaining the collar.

6. Remove the stem botton.

7. Remove the actuator valve.

12.2.3 Valve Repacking

1. Hold stem by inserting a 1/16 inch diameter rod or nail in hole near the top of the stem. Unscrew the stem button. Do not tamper with the top locking set screw in stem button.

2. Remove packing nut, old packing, packing follower, and spring. Install new spring and packing follower. Use a small amount of lubricant Amoco H-100 and thread new packing very carefully over the stem with concave side down for 250 psi (1724 kPa) rubber packing.

3. Reinstall packing nut by pushing down to compressed spring until threads engage, and tighten until snug. Be certain the valve stem moves up and down. Reinstall stem button, stem extension (if applicable), and actuator.

12.2.4 Valve Rebuilding

Follow disassembly procedures as applicable. Replace all parts subject to wear and damage. Reassemble in reverse order using new parts.

Note: *Run down all bonnet cap screws until fingertight, and proceed to torque down evenly using a reduced torque. Space successive tightening at 180 degrees, etc, until the bonnet raised face contacts the body on all sides. Then apply torque as specified.*

12.2.5 Disassembly Procedures

1. Relieve water pressure from system and remove actuator.

2. Hold stem by inserting a 1/16 inch diameter rod or nail in the hole near the top. Partially unscrew set screw inside the motor actuator. Do not tamper with locking set screw in the top of the stem buttom. Unscrew motor.

3. Remove packing nut and all parts down to the bonnet.

4. Remove stem and plug. Direct acting threaded body valves (Fig. 36). Unscrew the bonnet. Lift out the stem and disc holder assembly and the plug.

5. Disassemble stem and plug. Threaded body valves. Unscrew plug (Fig. 36) from stem to remove disc and spring. The disc may have to be pried from the disc holder with a screwdriver. The valves have a staked stem and disc holder assembly (Fig. 36). The stem and plug cannot be disassembled on some valves with metal-to-metal seats.

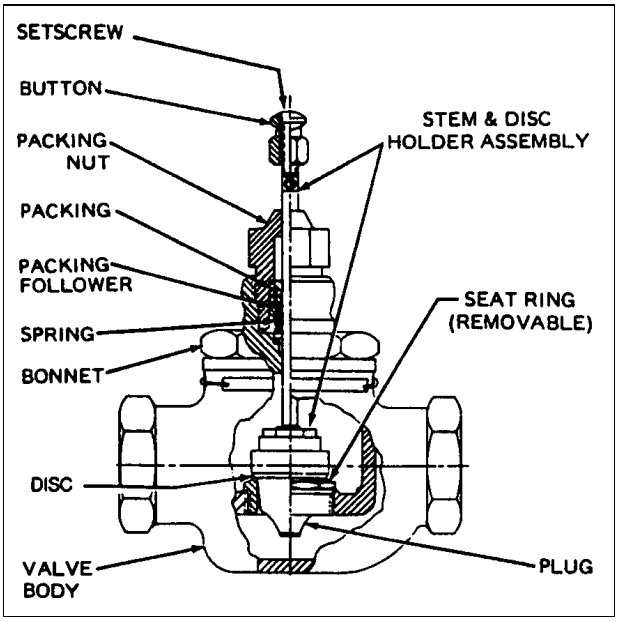

FIGURE 36: VALVE BODY ASSEMBLY 22055

12.2.6 Maintenance

Using solvent, remove all dirt and grease accumulation around the packing nut and stem.

Warning: *Permanent damage to respiratory system or skin tissue can result from careless handling of solvents. Special care should be exercised to avoid prolonged inhalation and/or contact with the skin.*

12.3 Water Recirculating Pump

12.3.1 Description

This vehicle is provided with a water recirculating pump which is located in the HVAC compartment. The water recirculating pump consists in a centrifugal pump and an electric motor which are mounted on a common shaft in a compact assembly.

The motor is equipped with prelubricated sealed ball bearings which require no maintenance. A self-adjusting mechanical shaft seal is incorporated in this assembly to prevent coolant leakage between the pump cavity and armature shaft. This seal derives its lubrication from the liquid pumped, and **it will be destroyed if permitted to operate dry.**

This pump requires no periodic maintenance other than replacement of motor brushes. Replacement of motor brushes can be performed without removing the pump assembly. Visual inspection of the pump should be made while the pump is in operation to determine if the shaft seal is intact. If there is evidence of coolant leakage, the unit must be disassembled for corrective measures. Disassembly of the pump will be necessary only in the case of a seal leak, bearing failure, or motor failure.

12.3.2 Removal

1. Stop engine and allow engine coolant to cool.

2. Close shutoff valve on the line located in the rear electric compartment. Refer to 12.6 Preheater System of this section to gain access to the heater line shutoff valve.

3. Disconnect the electrical wiring from the motor.

Warning: *Before proceeding with the following steps, check that coolant has cooled down.*

4. Remove the drain plug at the bottom of the pump and place a container to recover the residual coolant in the line.

5. Disconnect water lines from the pump at the flange connections.

6. Remove the two clamps holding the pump motor to its mounting bracket. Remove the pump with the motor as an assembly.

12.3.3 Disassembly (Refer to Fig. 37, Water Recirculating Pump and Motor)

1. Remove two brush caps (16, Fig. 37) and two brush assemblies (15, Fig. 37). When removing brushes, note the position of the brush in the tube. Brush life is significantly decreased if brushes are not replaced properly.

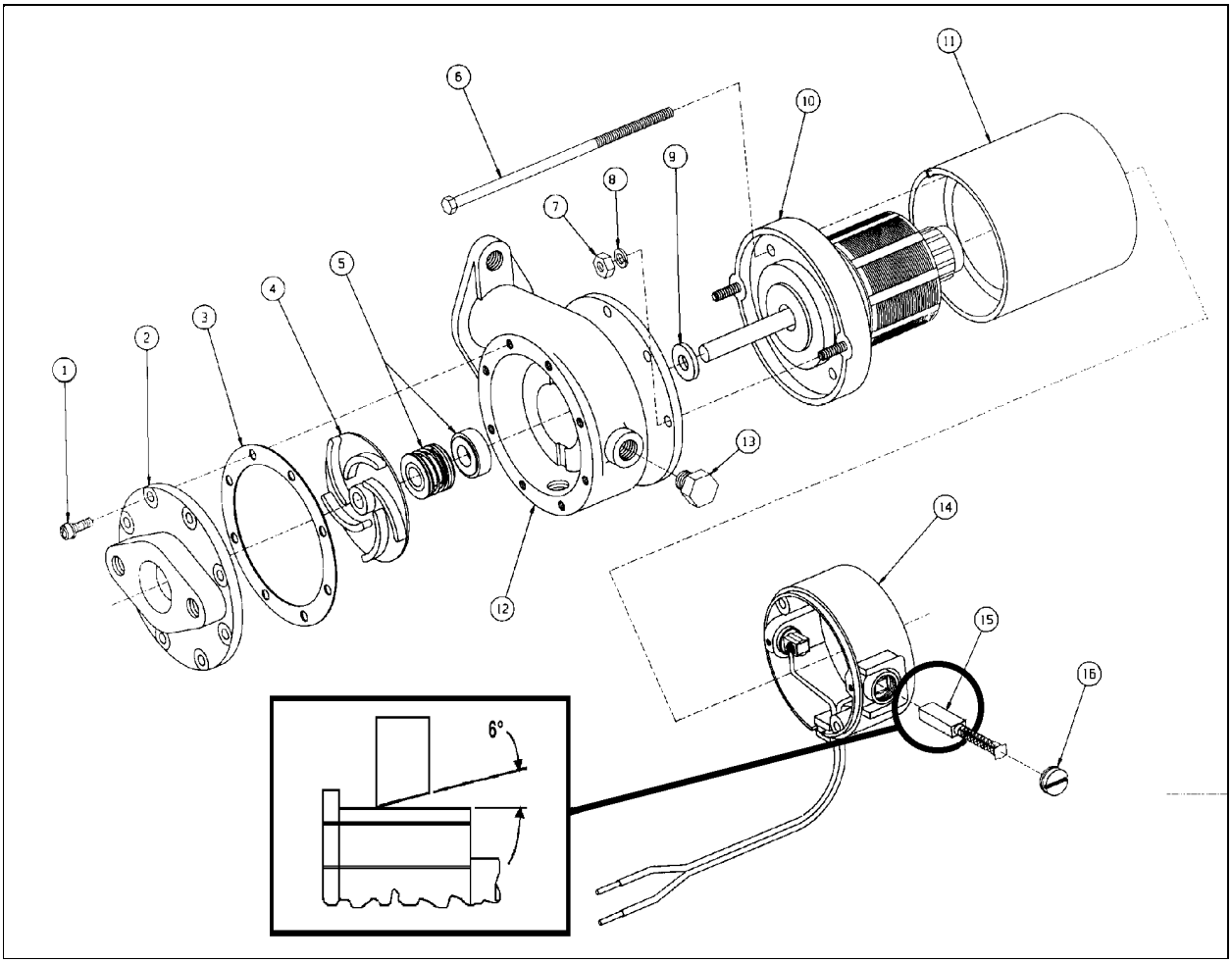

FIGURE 37: WATER RECIRCULATING PUMP

22056

2. Remove the pump cover (2, Fig. 37) by removing eight head screws. Remove cover carefully to prevent damage to gasket (3, Fig. 37).

3. Remove gasket (3, Fig. 37).

4. Remove two hex nuts and lock washers which hold pump assembly to the motor.

5. Remove the pump from the motor as follows:

a. Install puller tool assembly (MP Co. Part No. 24702 or equivalent) to pump body (12) using four screws removed from the pump cover (2).

b. Tighten the puller screw to press the motor shaft out of the impeller hub. The pump is now free from the motor.

6. Remove the puller tool.

7. Remove impeller (4) and components of the pump seal assembly (5).

Caution: Do not scratch or mar the sealing surface of this seat, as its sealing feature will be affected, thus resulting in continuous leakage.

Inspection

Components removed from the recirculating pump and motor assembly should be compared with new parts to determine the degree of wear.

12.3.4 Brushes

1. When removing brushes, note the position of the brush in the tube. Brush life is shortened if the brushes are not replaced properly.

2. Examine brushes for the following:

   a. Wear

      Replace the brushes if less than 25% of the usable brush is left (less than 0.300 inch [8 mm]).

   b. Chipped edges

      Chips can be caused by improper handling or installation. Badly chipped brushes should be replaced regardless of their length.

   c. Annealed brush spring

      This can be detected by noting the resiliency of the spring. Annealing is caused by failing to tighten the brush caps properly, thus not providing a good low resistance contact between the terminal and the brush tube. Replace brushes showing evidence of annealed springs.

   d. Frayed or broken pigtail

      An improperly installed brush may have the pigtail (shunt) pinched under the terminal or between the coils of the spring. If the pigtail is badly frayed or broken, replace the brush.

3. Observe the following factors when replacing brushes:

   a. The face of a new brush is carefully cut to cause proper seating during the *"wear-in"* period.

   b. Improper installation can harm both the brush and the commutator.

   c. Replacement brushes should be of the proper grade.

   d. New brushes have a six (6) degree angle. The brush should always be inserted so that the angle is open away from the pump end of the assembly (inset, Fig. 37).

   e. Brush performance will be affected if the spring and terminal are not properly placed in the brush tube. The spring should be free over its entire length and the terminal should make good contact with the metal brush tube insert.

12.3.5 Bearings (Fig. 37)

1. Rotate the motor shaft. If the ball bearings show evidence of wear, they should be replaced.

2. The use of a bearing puller is recommended when removing the bearings to help prevent damaging the armature winding or the commutator.

3. Replacement bearings should be pressed into the same exact location as the original bearings.

4. It is recommended that a suitable sealant (such as Loctite or equivalent) be used between the shaft and the bearing, if the fit is not tight enough to prevent the shaft from spinning inside the inner race.

6. After replacing the bearings, check the position of the commutator in the motor by looking down into the brush tube. Neither the riser nor the edge of the commutator should be visible.

12.3.6 Commutator

1. The commutator is a precise assembly. Although it is solidly built and made of a fairly tough material, it can be easily ruined by careless handling.

2. The commutator should be refinished only on equipment which provides good concentricity and the proper finish.
3. The commutator should be refinished if a micrometer reading shows a difference between *"in track"* and *"off track"* diameter of 0.187 inch (4,7 mm) or more.
4. The commutator should be carefully undercut with a 0.025 inch (0,6 mm) or less slot width.
5. A 25 to 50 micromesh finish is desirable on a new or refinished commutator.
6. The commutator should not be touched with the fingers since sweat and body oils will rapidly discolor and oxidize its surface.

12.3.7 Miscellaneous (Fig. 37)

1. Check the shaft slinger (9) to make sure it is tight on the motor shaft. If the slinger slips on the shaft, it should be replaced.
2. Inspect seal assemblies (5) to determine wear. If the seal has leaked, or is badly worn, it is recommended that a complete new seal assembly be installed.
3. The impeller (4) is a press fit on the armature shaft. This press fit must be maintained to prevent the impeller from slipping. Install a new impeller if necessary.

12.3.8 Assembly (Fig. 37)

1. Install slinger (9) on the motor shaft.
2. Assemble body (12) to the motor.
3. Install seal assy (5).
4. Install impeller (4) in the following manner:

a. Place the impeller on a flat surface with the vanes against the flat surface.

b. Invert the motor and pump body assembly, then pilot the pump shaft into the impeller bore. **DO NOT HAMMER** on the motor shaft extension at rear of motor.

c. Press on motor and pump body until the machined face of the pump body is flush with the face of the flat surface on which the impeller is resting. The face of the impeller vanes must now be flush with the machined face of the pump body.

5. Install gasket (3). This gasket serves both to seal the cover and to establish the proper clearance between the face of the impeller and the pump cover.
6. Attach cover (2) to the pump body using eight head screws (1).
7. Install motor brushes assembly (15) and brush caps (16).

12.3.9 Installation

1. Apply gasket cement to the pump body line adapter and to the line flanges, put the two gaskets in place, and connect water lines from the pump at the flange connections. Position the pump and motor assembly on the mounting bracket. Position the mounting clamps over the motor and secure with mounting bolts.
2. Apply pipe sealant on threads of drain plug, and screw it in place.
3. Connect electrical wiring to the pump motor.
4. Open shuttoff valve located in the rear electric compartment (near the preheater). Refer to 12.6 Preheater System of this section to gain access to the heater line shutoff valve.
5. Fill the cooling system as previously instructed in this section under *"Filling Heating System"*, then bleed the system as previously instructed in this section under *"Bleeding Heating System"*.

12.4 Water Filter

12.4.1 Description

This vehicle is provided with a cleanable water filter, which is located in the HVAC compartment (refer to Fig. 15 and 29(behind the right air duct)).

12.4.2 Maintenance

Filter maintenance consists in changing the element at break-in 3000 miles (4 800 km), and subsequently every 50,000 miles (80 000 km) or once a year, whichever comes first.

Note: *Each time soldering is performed on any water pipe of the heating system, operate heating system a few minutes so that any foreign matter will be routed to the filters. Clean filters.*

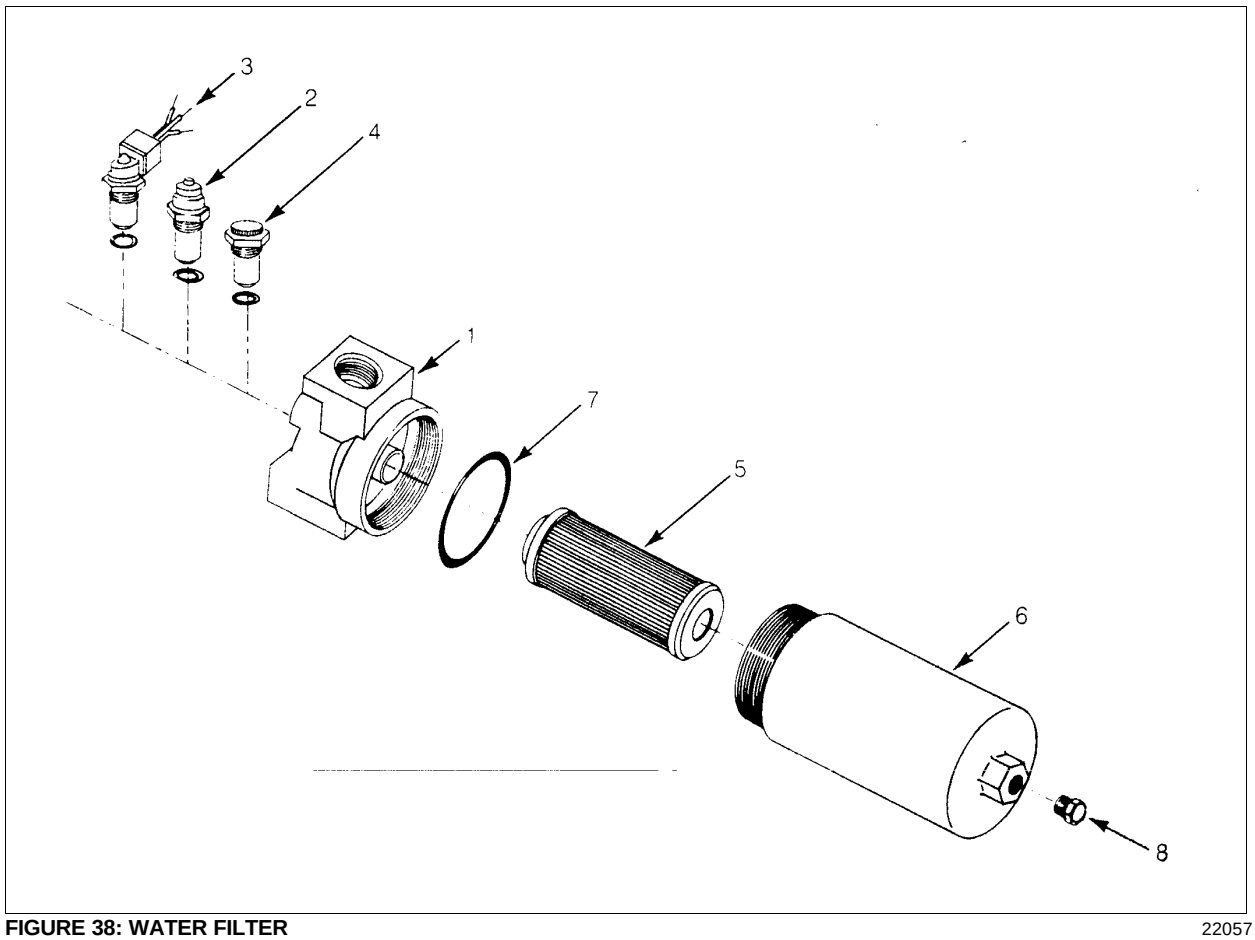

FIGURE 38: WATER FILTER 22057

12.4.3 Filter Servicing (Fig. 38)

1. Stop engine and allow engine coolant to cool.

2. Close shuttoff valve on the line located in the rear electric compartment. Refer to 12.6 Preheater System of this section to gain access to the heater line shutoff valve.

Warning: *Before proceeding with the following steps, check that coolant has cooled down.*

3. Rotate bowl (6) counterclockwise and remove.

4. Remove element (5) from housing. Discard all disposable elements. These elements are not cleanable.

5. Place new, clean element in housing, centering it on location in the head.

6. Inspect bowl seal and replace if necessary.

7. Replace bowl. Rotate clockwise and hand tighten.

8. Correct coolant level in surge tank as instructed previously in this section under *"Filling Heating System"*.

12.5 Bypass Solenoid Water Valve (Optional)

This valve is optional and is installed on the vehicle equipped with a preheater. The valve is located in the HVAC compartment (Fig. 29). This valve is similar to the driver' liquid solenoid valve. Refer to Fig. 33 for part names.

12.5.1 To Remove or Change the Coil

- Stop engine and allow engine coolant to cool.

- Close shuttoff valve on the line located in the rear electric compartment. Refer to 12.6 Preheater System of this section to gain access to the heater line shutoff valve.

To remove the solenoid coil:

First take out the retaining screw at the top of the coil housing. The entire coil assembly can be lifted off the enclosing tube.

To reassemble:

Make sure that the parts are placed on the enclosing tube in the following order:

1. Be sure to change electrical data plate according to coil specifications change.

2. Place coil and yoke assembly on the enclosing tube. Lay data identification plate in place.

3. Insert the coil retaining screw, rotate housing to proper position and tighten screw securely.

12.5.2 To Take the Valve Apart

To disassemble:

This valves may be taken apart by removing the socket head screws which hold the body and bonnet together. After removing the screws, carefully lift off the bonnet assembly (upper part of the valve). Don't drop the plunger. The diaphragm can now be lifted out. Be careful not to damage the machined faces while the valve is apart.

Note: *The above procedure must be followed before brazing solder type bodies into the line.*

To reassemble:

Place the diaphragm in the body with the pilot port extension up. Hold the plunger with the synthetic seat against the pilot port. Make sure the bonnet O-rings are in place, the bonnet assembly over the plunger, and that the locating sleeve in the bonnet enters the mating hole in the body. Insert body screws and tighten uniformly.

12.6 Preheating System (optional)

The preheater is located in the rear electric compartment. **To gain access to the pre-heater and the heater line shutoff valve.** Remove the preheater access panel screws. Remove the panel (Fig. 39).

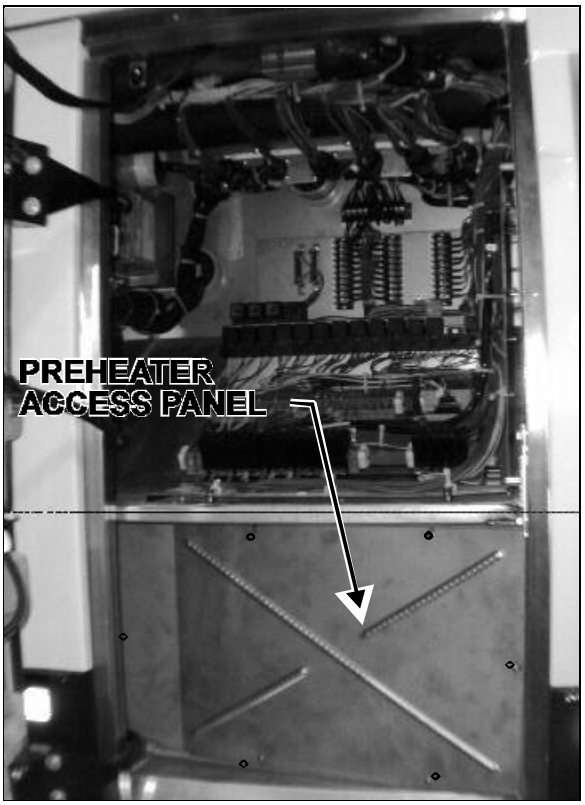

FIGURE 39: REAR ELECTRIC COMPARTMENT 22058

12.6.1 ESPAR (EBERSPÄCHER)

Description of Operations

This Auxiliary Preheating System is used for preheating and retaining the heat of water-cooled engines. It can be used before starting the engine to ease it's starting and to provide immediate inside heat upon operation of the heating system. It can also be used with engine running to maintain coolant heat and maintain the set temperature inside vehicle.

The heater operates independently from the vehicle engine. It is connected to the cooling and heating circuits, the fuel system and the electrical system of the vehicle.

The pilot lamp turns on when the heater is switched on. Combustion air flows in to flush out the combustion chamber and the water circulation pump is put into operation. The fuel metering pump conveys fuel in precise doses to the combustion chamber where fuel and combustion air form a combustible mixture which is ignited by the glow plug.

Once the flame sensor has signalled to the control unit that combustion has taken place correctly, the glow spark plug and ignition coil are switched off.

The hot combustion gases are diverted at the end of the flame pipe, then pass through the indirect heating surfaces of the heat exchanger and transmit their heat to the water passing through the heat exchanger.

The heat is thermostatically controlled and operates intermittently, i.e. the switched-on times of the burner vary depending on the heat requirement. The water temperature depends on the setting of the built-in water thermostat.

The water circulation pump remains in operation as long as the heater is operating, even in the regulation intervals and during the delayed cutout of the switched-off heater. The pump can also be operated independently from the heater by means of an appropriate circuit.
The heater can be switched on at any time, even during the delayed cutout period. Ignition takes place once this delay time is over.

When the heater is switched off, the fuel supply is interrupted. The flame goes out, and at the same time a delayed cutout of some 2.5 minutes begins.
The combustion air still flowing flushes the remaining combustion gases out of the chamber and cools off the hot parts on the exhaust side of the heat exchanger, while the water circulation pump, still running, transmits the heat present in the heat exchanger, thus preventing local overheats. Once the delayed cutout time is over, both the combustion air blower and the water circulation pump switch off automatically. A cutout will take place in case of any failure of the preheater.

12.6.2 Webasto

Description of Operations

Switch on the heater. The operation indicator lamp comes on and the heater motor and circulating pump begin to run.

After about 10-25 seconds the solenoid valve opens and fuel is sprayed into the combustion chamber. At the same time, the electronic ignition unit produces high voltage (8000 V) and the mixture of fuel and air in the combustion chamber is ignited by the spark on the ignition electrodes.

The flame is indicated by the flame detector, then the electronic ignition unit stops producing high voltage and combustion continues by itself (spark on electrodes is required only to ignite the flame). At this moment, the heater is working and producing heat.

If the heater is switched off by the on/off switch, the solenoid valve interrupts fuel supply, combustion stops and indicator lamp turns off. Combustion air fan still blows air, cleaning the combustion chamber of any fumes and cooling down the combustion chamber. Coolant circulation pumps coolant, making a purge cycle for approximately 2-3 minutes, thus protecting the heater against overheating.

If the heater is not switched off by the on/off switch, the control thermostat will switch off the heater when coolant temperature reaches 165° ± 6°F (75° ± 3°C) and turns it on at 154° ± 9°F (68° ± 5°C). During this time, the heater (combustion) is off and the indication lamp and coolant pump are on. Combustion air fan blows air for 2-3 minutes and then turns off.

12.6.3 PREHEATING SYSTEM TIMERS (AUXILIARY) (Optional)

The timer, located on L.H. lateral is used to program the starting and stopping time of the preheating system. One of two optional Timers may be installed in your vehicle, Espar (41 000 BTU) (Fig. 40) or Webasto (80 000 BTU) (Fig. 41). The system indicator light, located on the dashboard, illuminates when the system is functional. The following offers system descriptions for both timers.

Caution: *The preheating system should not operate for more than one hour before starting engine as this could discharge batteries.*

Warning: *Preheating system must not operate when vehicle is parked inside or during fuel fill stops.*

Note: *Preheating system uses the same fuel as the engine.*

In case of failure:

1. Shut off and turn on again.
2. Check main circuit breaker and overheating switch (Espar) or overheat fuse (Webasto).
3. Have system repaired in a specialized shop.

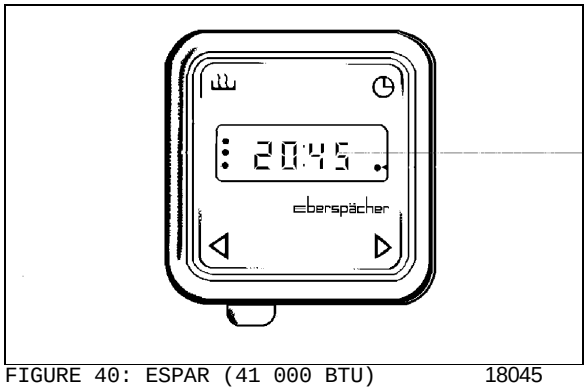

FIGURE 40: ESPAR (41 000 BTU) 18045

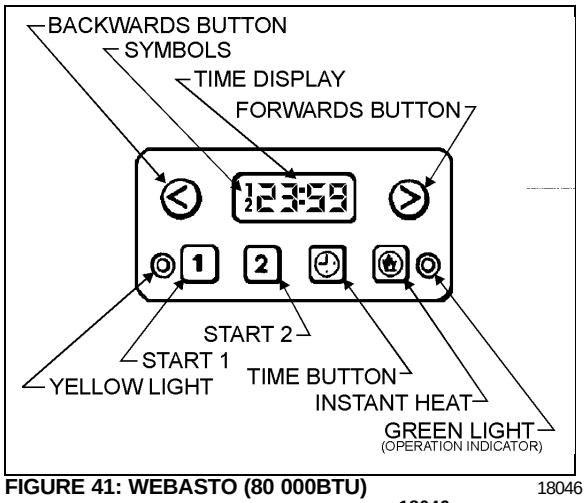

FIGURE 41: WEBASTO (80 000BTU) 18046

18046

12.6.4 Troubleshooting and Maintenance

Refer to the Webasto and Espar manuals annexed to the end of this section.

Note: *Switch on the preheating system briefly about once a month, even during the warm season.*

Caution: *During welding procedure on the vehicle, disconnect the preheater module connector in order to protect this system from voltage surges.*

13. SPECIFICATIONS

HVAC Logic panel

Make ..... Honeywell
Model W973B
Voltage rating..... 24 volts
Switching (on-off stages) .....Pilot duty spdt relays
Input signal (from electronic transmitter).....1 to 16 V DC
Supplier number..... W973B1016
Prevost number.....561805

Electronic transmitter

Make ..... Honeywell
Model ..... T7067B (modified for Prevost)
Voltage rating.....20 volts (from HVAC logic panel)
Current draw .....20 milliamperes
Output signalsTwo 1-16 volt signals ..... (one each for cooling and heating) to HVAC logic panel
Output signal rate of change (upon deviation from set point) .....2.5 V DC/1 °F (0,5 °C)
Supplier number..... T7067B1006
Prevost number.....561804

Fresh air inlet sensor

Make ..... Honeywell
Model C7046A
Sensing element .....Carbon type, thermistor-resistor element
Nominal resistance ..... 3000 ohms at 77 °F (25 °C)
Nominal sensitivity .....70 ohms/°F (124 ohms/°C) at mid-range
Supplier number.....C7046A1004
Prevost number.....950082

Return air sensor

Make .....Prevost
Prevost number (air sensor) 061961
Prevost number (temperature sensor) 372479

Discharge air sensor

Make ..... Honeywell
Type.....Non-adjustable thermistor sensor
Nominal resistance ..... 1420 ohms at 75 °F (24 °C)
Nominal sensitivity ..... 15 ohms/°F (25 ohms/°C) resistance increases as temperature falls
Supplier number..... T7022A1010
Prevost number.....561806

Main evaporator motor

Make	Prevost
Type	T-19
Voltage	27.5 V DC
Current draw	69 amps
Horsepower	2
Revolution	1750 rpm
Insulation	Class F
Motor life	20 000 hours
Brush life	10 000 hours
Motor supplier number	D509V54APRC1
Motor Prevost number	561939
Brush supplier number	1197
Brush Prevost number	561202

Condenser fan motors

Make	LeRoy-Somer
Type	TAP-12
Voltage	27.5 V DC
Current draw	23 amps
Horsepower	0.57
Revolution	1950 rpm
Insulation	Class F
Motor	20 000 hours
Brush life	10 000 hours
Qty	2
Supplier number	71B524/02
Prevost number	561558
Brush supplier number	9DB21003
Brush Prevost number	561914

Main evaporator air filter

Make	Permatron Corp.
Type	Washable 1" X 23 3/8" X 43 1/2" Polypropylene filter
Supplier number	MODEL IN-1
Prevost number	871051

Driver's unit evaporator motors

Make	MCC
Voltage	24 V DC
Quantity	2
Supplier number	250135
Prevost number	562167

Driver's unit evaporator air filter

Make	Permatron
Type	Washable 8"X18 3/4"X1/4" Polypropylene filter
Supplier number	MODEL "R"
Prevost number	871049

Refrigerant

Type R-134a
Quantity ..... 24 lbs (11 kg)

Compressor

Make ..... Carrier Transicold
Capacity ..... 41 CFM
Model 05G-134A
No. of cylinders 6
Bore ..... 2" (50,8 mm)
Operating speed ..... 400 to 2200 rpm (1750 rpm, nominal)
Minimum speed (for lubrification) ..... 400 rpm
Nominal horsepower 15
Oil pressure at 1750 rpm ..... 15 to 30 psi (103-207 kPa)
Oil capacity ..... 1.13 U.S. gal (4,3 liters)
Weight ..... 142 lbs (64,5 kg)
Approved oils
- Castrol ..... SW 68 (POE)
Supplier number 68PD541-104-7
Prevost number 950239

Compressor unloader valve

Make ..... Carrier Transicold
Type ..... Electric (AMC)
Voltage ..... 24 V DC
Watts 15
Supplier number (without coil) 17-40407-20
Prevost number (without coil) 950095
Coil supplier number 22-50030 (1)
Coil Prevost number 950096

Magnetic clutch

Make ..... Carrier Transicold
Type ..... Housing mounted 9" dia., 2-B grooves
Voltage ..... 24 V DC
Coil resistance at 68 °F (20 °C) ..... 5.15 - 5.69 ohms
Supplier number 50-01122-90
Prevost number 950204

Compressor V belts

Make ..... Dayco
Model ..... BX 97
Prevost number 506664
Qty 2

Condenser coil
Make ..... Carrier Transicold
Aluminum
Supplier number..... 68BC-509---104
Prevost number.....452482
Copper
Supplier number..... 68BC-509---104-1
Prevost number.....452483

Receiver tank (with sight glasses)
Make ..... Standard refrigeration
Maximum pressure..... 450 psig
Material .....ASTM A-515
Supplier number.....8409-19M
Prevost number.....871045

Filter dryer assembly
Make .....Alco
Supplier number..... EKH 307S
Prevost number.....950231

Moisture indicator
Make ..... Henry
Supplier number..... MI-30-7/8S
Prevost number.....950232

Driver's refrigerant liquid solenoid valve
Make ..... Parker
Type.....Normally closed with manual bypass
Nominal..... Capacity with R-129 Tons
Voltage.....24 V DC
Amperage draw..... 0.67 amps
Watts.....16
Supplier number (without coil) RB9MP3-MM
Prevost number (without coil) 95-0054
Coil supplier number..... R23MM-CB 24 V DC
Coil Prevost number 950055
Repair kit Prevost number 950056

Humidistat
Make ..... Honeywell
Model H402A
Scale range.....15 to 60 % relative humidity with OFF and ON position
Setting recommended.....30%
Sensing element ..... A thin (1 mil) moisture sensitive nylon ribbon
Supplier number.....H402A1023
Prevost number.....561803

Driver's hot water solenoid valve

Make	Asco
Type	Normally open (without manual bypass)
Voltage	24 V DC
Current draw	0.47 amp.
Watts	11.2
Pressure range	0 to 100 psi
Max. temperature	220°F
Supplier number (with coil)	106-269-1
Prevost number (with coil)	870812
Coil Prevost number	870960
Repair kit Prevost number	870872

Main hot water valve actuator

Make	Honeywell
Model	ML 784
Voltage	24 V DC
Type	Linear
Prevost number	64-1238
Supplier number	ML784A2071
Repair kit Prevost number (packing, follower, spring stem assembly and disc)	641261
Repair kit supplier number	14 00 2695-005

Single-seated valve

Model	V5011F
Prevost number	641239

Water recirculating pump

Make	M.P. pumps
Voltage	24 V DC
Supplier number	28689
Prevost number	871052

Water filter

Make	Parker
Supplier number (with element)	15CN1238WP
Prevost number (with element)	871028
Element supplier number	925566
Element Prevost number	871029

Driver's expansion valve

Supplier number	26-0190
Prevost number	950221

Main expansion valve

Make	Alco
Supplier number	058613
Prevost number	950237

Bypass solenoid water valve

Make	Parker Hanninfin
Bypass supplier number	RB21ME7-MM
Bypass Prevost number	870886
Coil supplier number	R-23MM24VDC-CB
Coil Prevost number	870886
Repair kit supplier number	76754
Repair kit Prevost number	870980

Preheating system

Make	Espar
Model	D 12 W
Capacity	41,000 Btu/h (12 kW)
Heating medium	Coolant
Rated voltage	24 V DC
Operating voltage	20-28 V DC
Electric power consumption (without coolant recirc. pump)	55 watts
Fuel consumption	0,4 U.S. gallons/hr (1,65 liters/hr)
Supplier number	25 1860 05
Prevost number	871077

Preheating system

Make	Webasto
Model	DBW 2020
Capacity	80 000 Btu/h (23,3 kW)
Heating medium	Coolant
Rated voltage	24 V DC
Operating voltage	20-28 V DC
Electric power consumption (without coolant recirc. pump)	120 watts
Fuel consumption	0,8 US gallons/hr (3 liters/hr)
Supplier number	666.640
Prevost number	871036

Carrier TRANSICOLD

Service Information

Nunber BAR-SER85-1

Date 6-14-85

Subject HOUSING-MOUNTED ELECTRIC CLUTCH

The procedure on the attached pages should be followed carefully when servicing the Carrier Transicold housing-mounted clutch. The following tools are recommended when removing and replacing this clutch:

TOOL LIST

DESCRIPTION	CTC PART NO. (WHERE APPLICABLE)
Spanner Wrench	07-00240
Rotor Installation Tool	07-00241
Socket Bearing Retaining Nut - Large	07-00242-01

3/8" Socket Set
Torque Wrench
3 Leg Puller w/3 1/4-20 UNC Cap Screws
1- Bolt 7/8-14 UNC x 2" Long
Feeler Gauge .020 .030 .060
Grease Gun, Manual, 0.1 Oz Per Stroke
Depth Gauge 0-1/2"
Ohmmeter

Andrew Widay
Manager
CTC Service Engineering

UNITED TECHNOLOGIES CARRIER TRANSICOLD

05G COMPRESSOR HOUSING MOUNTED CLUTCH

The new housing-mounted electric clutch, HMC, eliminates drive belt loading on the 05G crankshaft, and applies this load directly to the crankcase of the compressor. The following procedure should be followed carefully whenever it becomes. necessary to remove and replace the HMC.

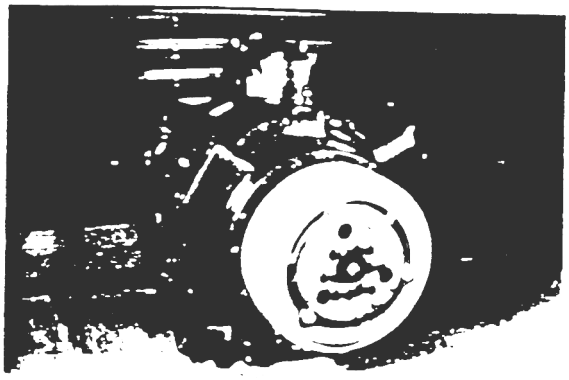

Housing-Mounted Clutch Removal

CAUTION: Remove drive belt before attempting to remove clutch.

1. Remove armature as a complete assembly by removing retaining capscrew (3/8-24 x 1-1/4" Lg), lockwasher, and special 3/8 washer from compressor crankshaft. Use special CTC tool P/N 07-00240 to prevent crankshaft rotation, as shown.



2. Install a 7/8-14 x 2" capscrew into the center hole of the armature assembly. Use this capscrew as a jacking bolt to remove the armature assembly. Use tool 07-00240 as in Step 1 to prevent crankshaft rotation.

   NOTE: Do not use a puller or pry against the armature hub or bumper plate, as this could cause damage to these parts.

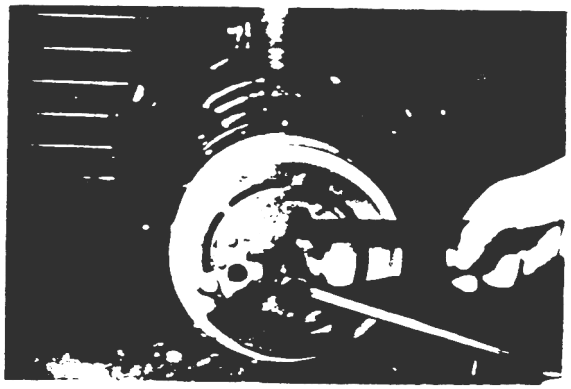

3. Remove the clutch armature assembly from the compressor crankshaft as a complete assembly, as shown.



4. Remove the rotor retaining nut with special CTC tool P/N 07-00242-01.





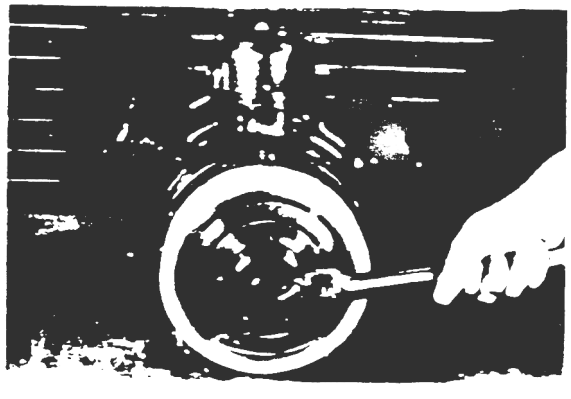

5. Install a flange-type gear puller into the three 5/16-18 tapped holes in the clutch rotor assembly, as shown.



CAUTION: Use a washer or other protective device to prevent damage to crankshaft and threaded hole in the crankshaft by the puller. Never use a puller in the belt grooves, as damage to the rotor may result. Use a pry bar as shown to prevent rotation of the clutch rotor.

6. Once the rotor has been pulled From the clutch bearing mounting hub, carefully lift the rotor assembly away from the compressor, as shown.

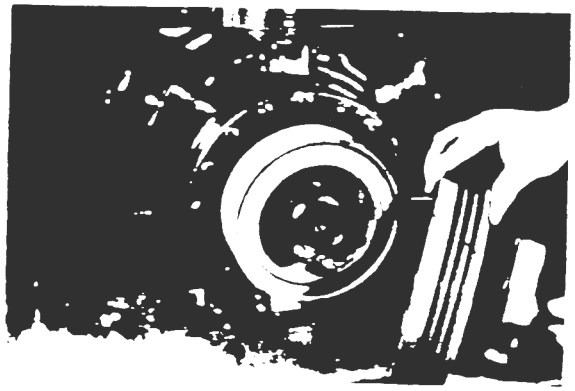

7. To remove the clutch coil, disconnect the coil's electrical cable from the wiring harness. Then remove only the three 3/8- 16 capscrews holding the coil to the flange of the clutch bearing mounting hub, and carefully remove the coil, pulling straight out from the flange. Do not pry coil off, as it may bend the mounting plate.



Housing-Mounted Clutch Installation

1 Prior to instlling the H31C, inspect For dents, nicks, or burrs on the clut a bering mounting hub and clutch assembly. Correct if any are found , and clean clutch mounting hub and ID of clutch bearing with a chlorinated base or naphtha type solvent.



2. Inspect coil for damaged power leads , bent or cracked mounting plate, or burned or cracked potting material.

3. Check coil for electrical continuity, resistance, and shorts to ground.

   Resistance at 68°F: Lead to Lead 24 VDC coil 5.15-5.69 ohms
   12 VDC coil 1.92-2.12 ohms

   Lead to Ground 12/24 VDC coil INF or open

   Replace coil if above conditions are not met.

4. Slide the coil onto the clutch bearing mounting hub so that the lead wires exit between the 3 and 5 o'clock position, as shown.

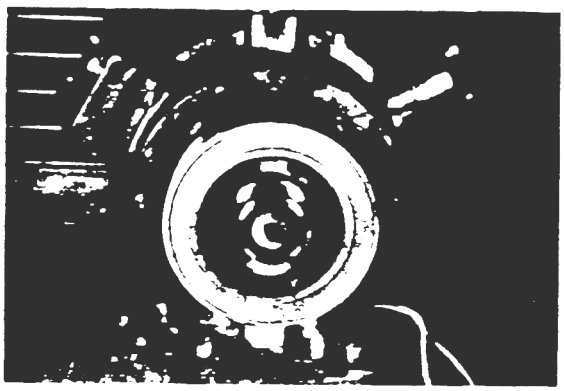

5. Secure the coil to the bearing mounting hub flange with the three 3/8-16 capscrews removed in Step 7 of Clutch Removal. Torque capscrews to 25-30 ft-lb (3.46-4.15 MKG).

   CAUTION : Do not draw coil onto the clutch bearing mounting hub flange with the capscrews, as this may distort the coil.

6. To ease the installation of the rotor onto the clutch bearing mounting hub, preheat the inner race of the rotor bearing by placing an electric heater inside the bearing bore (a 75-100 watt outdoor post lamp style bult applied for 15-30 minutes may be used).

   CAUTION : Do not heat bearing with an open flame or heat bearing above 175°F.

10. Place armature and hub assembly onto the compressor crankshaft and insure the hub seats on the crankshaft properly,

11. Insert the special key CTC P/N 68G2-9072 (1.75 **x** .250 x .199) in the keyway until outer end of key is flush with the hub's counter bore, as shown .



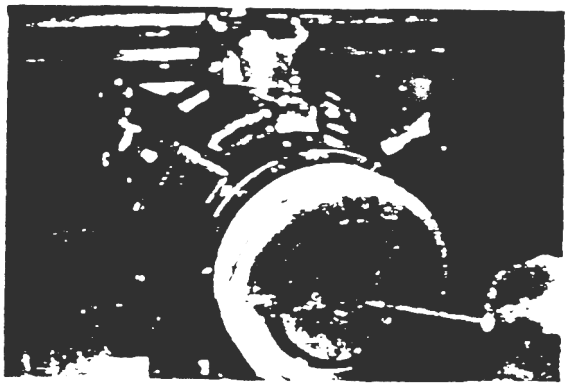

12. Secure armature assembly to crankshaft with the 3/8 special flat washer, lock washer, and 3/8-24 x 1-1/4" lg capscrew removed in Step 1 of Clutch Removal. Torque capscrew to 16-20 ft-lb using CTC tool P/N 07-00240 to prevent crankshaft rotation.

Steps 13-19 are for new clutch installation only. After the initial adjustment, shim stack should not be changed.

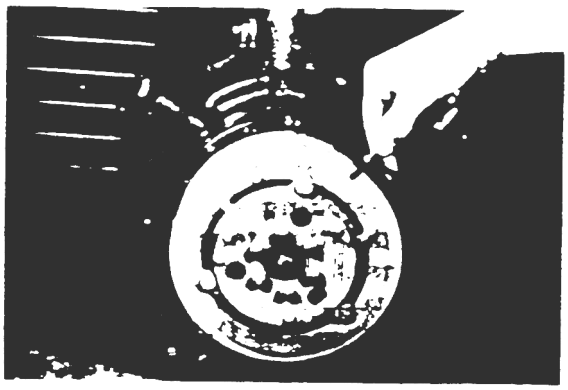

13. Measure the air gap between the armature and rotor surfaces, as shown.

14. Record this measurement and determine the amount of shims that must be removed to obtain a . 030/ .060 air gap. The shims consist of 1-.010 and 6-.020 shims.

15. Remove the six armature plate to armature hub retaining nuts and washers. Use CTC tool P/N 07-00240 to prevent armature rotation, as shown.

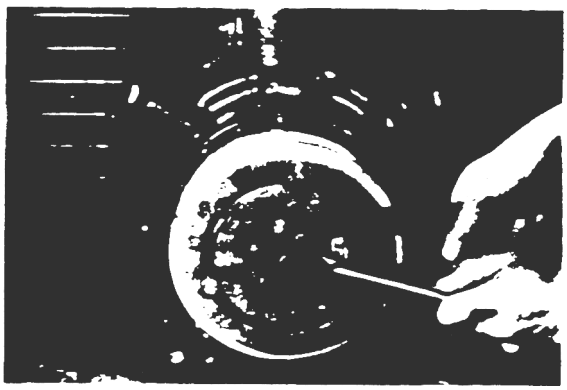

16. Remove the required number of shims to obtain an air gap of .030/ .060.

17. Insert a .020 feeler gauge between the outside edge of the clutch bearing mounting hub and the inside edge of the armature mounting hub, as shown. The clearance should be .020 or greater,

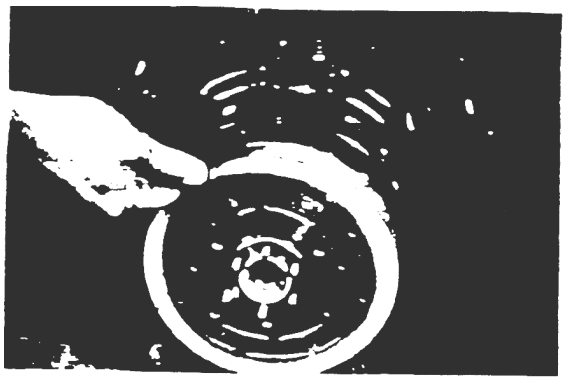

18. Reinstall armature plate, washers, and retaining nuts and torque to 7 ft-lb using CTC tool P/N 06-00240 to prevent crankshaft rotation.

19. Recheck air gap to confirm that YOU have obtained the . 030/. 060 clearance.

FIELD SERVICE PROCEDURES

1. Greasing of Clutch Bearing

The clutch bearings are pre-greased by the bearing manufacturer with the proper operating charge. Do not add grease to the bearing for at least 5000 hours of bus operation.

CAUTION: Overgreasing of the bearing will cause the bearing to operate at higher temperatures that may result in:

1. Blowing grease through the bearing seals onto the clutch friction faces, causing clutch slippage. A slipping clutch tends to run extremely hot, resulting in forcing more grease from the bearing, thereby increasing slippage and burning the magnetic coil.

2. Reduction in torque transmission capacity.

This is a situation where “more” is not better.

Recommended frequency for adding grease:

Up to 5000 hours bus operation	None
After initial 5000 hours	Add O. 1 oz SR1-2 grease during preseason A/C system checkout (i. e., once per year during a Spring month)

Grease required q ust be “Chevron SR1-2" or CTC Engineering approved equal.

Procedure for Adding Grease to the Clutch Bearing

The grease fitting is located in the clutch bearing retaining nut. Access to the grease fitting is accomplished by remoVing the armatur assembly as in Step u, 2, and 3 of HMC Removal.

NOTE: The removal of the armature in order to add grease to the bearing is deliberate to insure that all grease spillage can be cleaned from the clutch, reducing the potential for clutch slippage and the resulting loss of clutch torque transmission capacity.

Any unauthorized modification of the clutch armature to facititate greasing of the bearing will void the clutch and compressor warranties.

It is recommended that a hand operated grease gun with approximately 0.1 oz delivery per stroke be used to add grease to the bearing. Grease gun must contain "Chevron SR 1- 2" grease.

Wipe the grease fitting clean of all dirt and foreign materials.

Attach grease gun to grease fitting. Insert 0.1 oz grease into bearing (1 to 2 strokes of the gun).

CAUTION: Do not give extra strokes "for good measure" as premature clutch performance degradation may result.

After adding grease to the bearing, wipe all grease spillage from clutch faces, retaining nut, and hubs. If you can see it, wipe it up.

Reinstall armature assemblv and torque retaining nut to 16-20 ft-lb torque, as in Steps 10, 11, and 12 of HMC Assembly.

2 . Inspection for Wear

CAUTION: Insure bus or compressor drive engine is not operating. Take extra precautions to prevent inadvertent engine starting while clutch is being serviced.



A) With clutch coil de-energized, measure distance from face of armature to face of rotor, as shown. Feeler gauges inserted between the rotor and armature friction faces is not recommended due to the uneven wear on the friction surfaces.

Energize the clutch coil and repeat the measurement. If the difference between the first and second measurements exceeds .110 inches, the clutch rotor and armature are to be replaced.

NOTE: Do not attempt to readjust the armature travel by removing shims. A catastrophic clutch failure may result. After initial (new) air gap adjustment the shim stack should never be changed.

7. After preheating bearing, slide rotor assembly onto clutch bearing mounting hub. To facilitate seating of the bearing on the hub, place CTC tool P/N 07-00241 against the inner race of the bearing and tap gently with a hammer. as shown.





8. Install bearing retaining nut on clutch mounting hub and use torque wrench to tighten.

   If the smaller nut without the grease fitting is used, torque nut to 50 ft-lb with CTC tool P/N 06-00242-02 The taper on the nut faces the bearing.

   If the larger nut with the grease fitting is used, torque the nut with CTC tool P/N 07-00242-01. Due to the self-locking feature of the nut, the installation torque may vary. When installing the nut, observe the torque required to turn the nut onto the hub. After the nut seats the bearing against the hub, apply a torque 50 ft-lb greater than the installation torque.

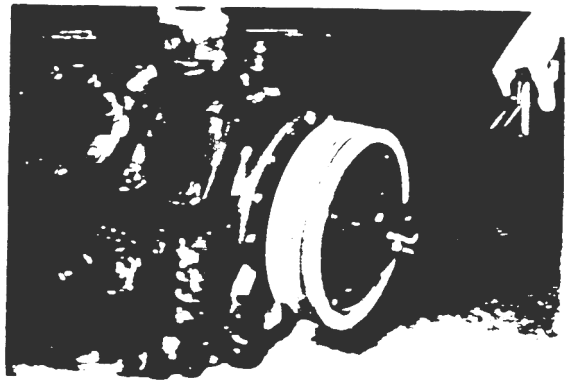

9. Check coil to rotor clearance by inserting .020 thick by .156 wide (msx.) feeler gauge through an outer slot in rotor, as shown. Insert the feeler gauge so it extends beyond the rear face of the rotor and rotate the rotor one full turn. There should be no rubbing or binding.

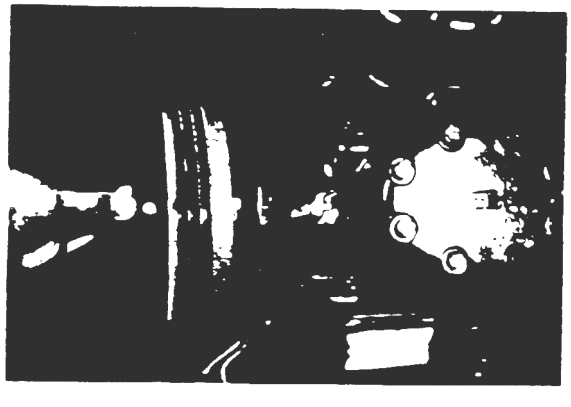

B) Sever mix rotor and armature assembles between used assemblies or new and used assemblies.

CAUTION: If either the armature or rotor assemblies are defective, both assemblies must be replaced.

C) If raised ribs on friction face are worn flat or nearly flat, replace armature and rotor assemblies.

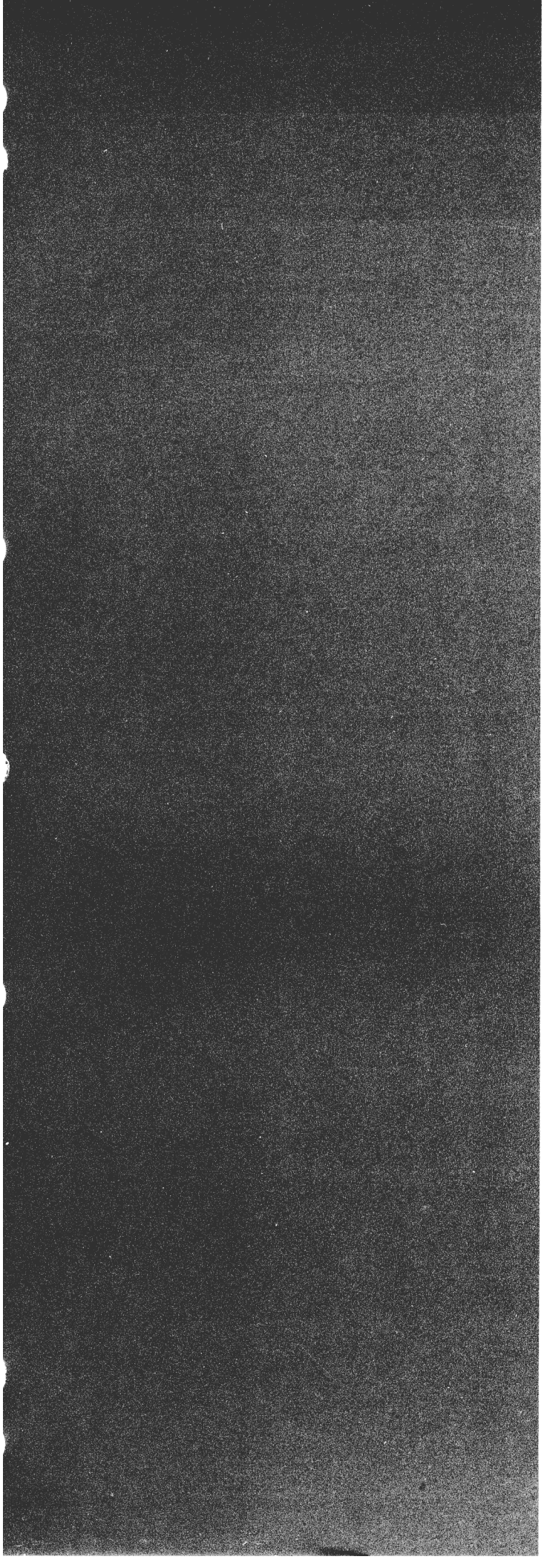

Service and Repair Manual

Webasto

COOLANT HEATERS

DBW 2010
DBW 2020
DBW 300
DBW 350

Webasto

CIRCULATION PUMPS

U 4810
U 4814
U 4816

PRICE $5.50

INDEX

1. Technical Data 2
1.1 Technical data of the heaters 2
1.2 Technical data of the coolant circulating pumps 2
1.3 Permissible extension of the connections 2
2. General Description 3
2.1 Description of operation 5
3. Heater Components 5
3.1 Electronic control unit 5
3.2 Motor 5
3.3 Combustion air intake —regulation 6
3.4 Clutch 6
3,5 Combustion air fan 6
3.6 Toothed gearing 6
3.7 Fuel pump 6
3.8 Solenoid valve 6
3.9 Fuel nozzle (nozzle holder) 7
3.10 Ignition electrodes 7
3.11 Flame detector 7
3.12 Fuel lines on the heater 7
3.13 Combustion chamber 7
3.14 Heat exchanger 7
3.15 Electronic Ianition unit 8
3,16 Overheat fuse (white wires), Temperature limiter (green wires) 8
3.17 Control thermostat (green and red wires) 8
3.18 Pre-heat thermostat (green and blue wires) 8
3.19 Pre-heater 8
3.20 Coolant circulating pumps 8
4. Electrical diagrams 9
4.1 Wiring diagram for DBW 2010, 12 and 24 V 9
4.2 Wiring diagram for DBW 2020, DBW 300, 12 V 10
4.3 Wiring diagram for DBW 2020, DBW 300, 12 V. 11
4.4 Identification of terminals of control unit, 12 V only. 12
4.5 Identification of terminals of control unit, 12 V only. 12
5. Trouble Shooting 13
5.1 Quick check 13
5.2 Testing instruction 13
5.3 Instruction for fault finding 15
6. Repairing instruction 20
6.1 Important operating tips 20
6.2 Bleeding the cooling system 20
6.3 Removing the burner unit 20
6.4 Installing the burner unit 21
6.5 Replacing the solenoid valve. 21
6,6 Replacing the fuel pump 21
6,7 Replacing the nozzle 22
6.8 Checking or replacing the flame detector 23
6.9 Adjusting or replacing the ignition electrodes 23
6.10 Replacing the electric motor. 24
6.11 Replacing the ignition unit 24
6.12 Replacing or cleaning the combustion chamber 25
6.13 Replacing the overheat fuse. 25
6.14 Replacing the control thermostat (green and red wires) 26
6,15 Replacing the temperature limiter (green wires) 26
6.16 Replacing the pre-heat thermostat (green and blue wires) 26
6.17 Replacing the control unit 27
6.18 Checking and adjusting the fuel pressure 27
6,19 Repairing of the coolant circulating pump 28
7. Instruments and Tools 30
7.1 Gauge 30
7.2 Testing gear 30
7.3 Equipment for checking CO_2 30
7.4 Equipment for checking “Smoken umber” 30
7.5 Nozzle wrench 30
7.6 Fuel pressure gauge 30
Terms of Warranty . . . . . .

1. TECHNICAL DATA

The following data is subject to the normal tolerance for heaters if no tolerance is Decified. This is approximately ± 10% in an ambient of 20° C at normal voltage.

1.1 Technical data of the heaters

HEATER	DBW 2010	DBW 2020	DBW 300	DBW 350
DESIGN	Coolant heater with high-pressure nozzle			
HEAT OUTPUT k w Btu/h	(45.000)	(80.000)	(104.000)	(120.O00
FUEL	Diesel #1, #2 or Arctic			
FUEL CONSUMPTI0N l/h (g/h – US) (g/h – Imp.)	1.5 (0.4) (0.3)	3.0 (0.8) (0.7)	4.0 (1.2) (0.9)	4.4 (1.3) (1.0)
RATED VOLTAGE - V	12 or 24	12 or 24	12 or 24	12 OR 24
OPERATING VOLTAGE - V	10-14 or 20-28	10-14 or 20-28	10-14 or 20-28	10 -14 20-28
POWER CONSUMPTION OF HEATER WITHOUT COOLANT CIRCULATION PUMP - WATT	6 0	120	130	170
PERMISSIBLE AMBIENT TEMPE-RATURE DURING OPERATION: HEATER, CONTROL UNIT, COOLANT CIRCULATION PUMP -°C (“F)	–40 . . . . + 60 (-40. + 140)			

HEATER	DBW 2010	DBW 2020	DBW 300	DBW 350
STORAGE TEMPERATURE CONTROL UNIT HEATER, COOLANT CIRCULATING PUMP - °C (“F)	+ 85 max. (185 max.) – 40... + 85 (-40... + 185)			
MIN. CAPACITY OF COOLING SYSTEM l (Imp. gal.)	10 (2.2)	15 (3.3)		
PERMISSIBLE OPERATING PRESSURE OF THE COOLANT	bar (psi)	0.4-2.0 (6-29)	0.4-2.0 (6-29)	0.4-2.0 (6-29)	0.4-2.0 (6-29)
$C0_2$ IN EXHAUST GASES % BY VOL	10.5...11.0	10.5...11.0	10.5...11.0	10.5...11.0
CO IN EXHAUST GASES % BY VOL.	0.2 max.	0.2 max.	0.2 max.	0.2 max.
SMOKE NUMBER (BOSCH)	3.0 max.	3.0 max.	3.0 max.	3.0 max.
DIMENSIONS OF THE HEATER INCL. CONTROL UNIT mm TOL. ±3mm (inch)	L w H	584 (23) 205 (8.1) 228 (9)	680 (26.7 240 (9.5) 279 (11)	580 (26.7) 240 (9,5) 279 (11)	725 (28.5) 240 (95) 279 (11)
WEIGHT OF HEATER INCL. CONTROL UNIT kg (lb)	15 (33)	22 (48.5)	22 (48.5)	23 (50.7)

1.2 Technical data of the circulating pumps

CIRCULATING PUMP		U 4810	U 4814	U 4816
FLOW RATE l/h (imp. gal/min)		1600 (6.0) against 0.15 bar	5200 (19.0) against 0.2 bar	6000 (22.O) against 0.4 bar
NOMINAL VOLTAGE V		12 or 24	12 or 24	24
OPERATING VOLTAGE V		10-14 or 20-28	10-14 or 20-28	20-28
POWER CONSUMPTION	W	25	104	215
DIMENSIONS mm (inch)	L w H	173 (6,8) 94 (3.7) 77 (3,0)	221 (8.7) 108 (4.2) 105 (4.1)	295 (11.6) 113 (44) 114 (4.5)
WEIGHT kg (lb)		0.8 (1.8)	2.1 (4.6)	4.75 (10.5)
RECOMMENDED FOR HEATER*		DBW 2010	DBW 2020 DBW 300 DBW 350	DBW 2020 DBW 300 DBW 350

‘Choice of circulating pump depends on resistance of coolant circuit.

1.3 Permissible extension of the connections

HEATER	DBW 2010	DBW 2020	DBW 300	DBW 350
FUEL LINE: Øinternal mm (inch) length max. m (ft) suction head m (ft)	6* (0.25) 10 (33) 2 (6.6)	6* (0.25) 10 (33) 2 (6.6)	6* (O 25) 10 (33) 2 (6.6)	6* (0.25) 10 (33) 2 (6.6)
COMBUSTION AIR INTAKE PIPE: Ø internal mm (inch) length max. m (ft) bends max.	80 (3.2) 5 (16.5) 270°	80 (3.2) 5 (16.5) 270°	80 (3.2) 5 (16.5) 270°	80 (3.2) 5 (16.5) 270°
EXHAUST PIPE: Ø internal mm (inch) length max. m (ft) bends max.	38(1.5) 5 (16.5) 270°	70 or 80 2.75 or 3.2 5 (16.5) 270°	70 or 80 2.75 or 3.2) 5 (16.5) 270°	70 (2.75) 5 (16.5) 270°
HOSE CONNECTIONS INLET/OUTLET OD mm (inch)	18 (0.75)	38(1.5)	38(1.5)	38(1.5)
TEMPERATURE DIFFERENCE At INLET - °C) -OUTLET °F)	10 (18)	10 (18)	10 (18)	10 (18)

‘ Other dimensions upon request

2. GENERAL DESCRIPTION

The coolant heater consists of a heat exchanger (15) and a turnable burner head. The burner can be swivelled, alternately, to two sides and, therefore, adapted to the installation conditions. When swivelled out, the fuel pump (20), the solenoid valve (6), the ignition electrodes (10), the flame detector (19), the fuel nozzle (11) and pre-heat thermostat *(green and bhe wires) (25)* are easily accessible for the maintenance. The nozzle holder incorporates the fuel nozzle, the ignition electrodes, the solenoid valve and the pre-heater.

Under the removable protection cap of the burner, which can be mounted in three different positions and supports the combustion air intake with adjusting shutter, the motor (2) is installed which drives, through a toothed gearing (23) the fuel pump (20). The combustion air fan provides the quantity of air necessary to burn the fuel atomized by the fuel nozzle.

The combustion air swirler (17) installed in the combustion chamber (16) mixes the fuel with the air. The mixture is ignited by a high-voltage ignition spark, The combustion is taking place in the combustion chamber inserted into the heat exchanger (15).

The electronic control unit (l), mounted on the burner, controls the coolant heater and the ignition unit (3). A coolant circulating pump is necessary to operate the heater.

1. Electronic control unit
2. Motor
3. Electronic ignition unit
4. Clutch
5. Combustion air fan
6. Solenoid valve
7. Electrode holder
8. Coolant outlet
9. Coolant inlet
10. Ignition electrodes
11. Fuel nozzle
12. Overheat fuse (white wires)
13. Control thermostat (green and red wires)*
14. Temperature limiter (green wires)
15. Heat exchanger
16. Combustion chamber
17. Combustion air swirler
18. Exhaust pipe
19. Flame detector
20. Fuel pump
21. Fuel pipes
22. Combustion air intake with adjusting shutter
23. Toothed gearing
24. Pre-heater
25. Pre-heat thermostat (blue and green wires)
26. Bleeding valve

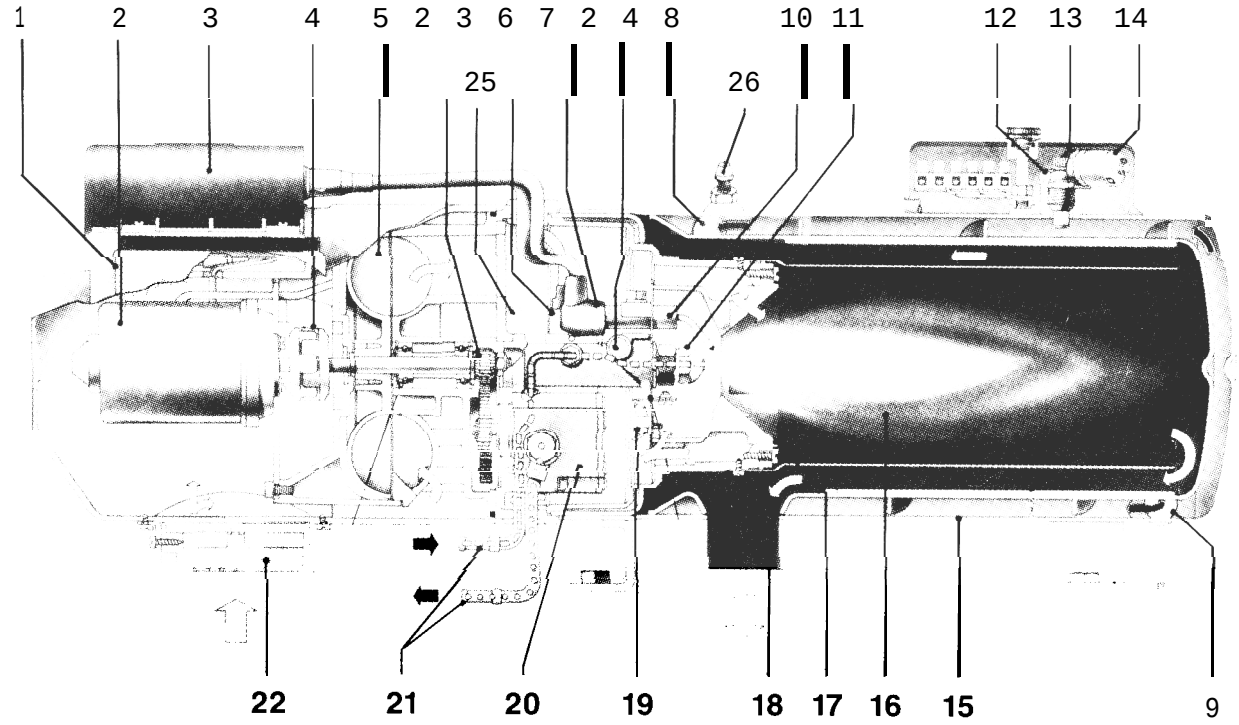

DBW 2010

‘ Second version of the control thermostat with white and orange wires.

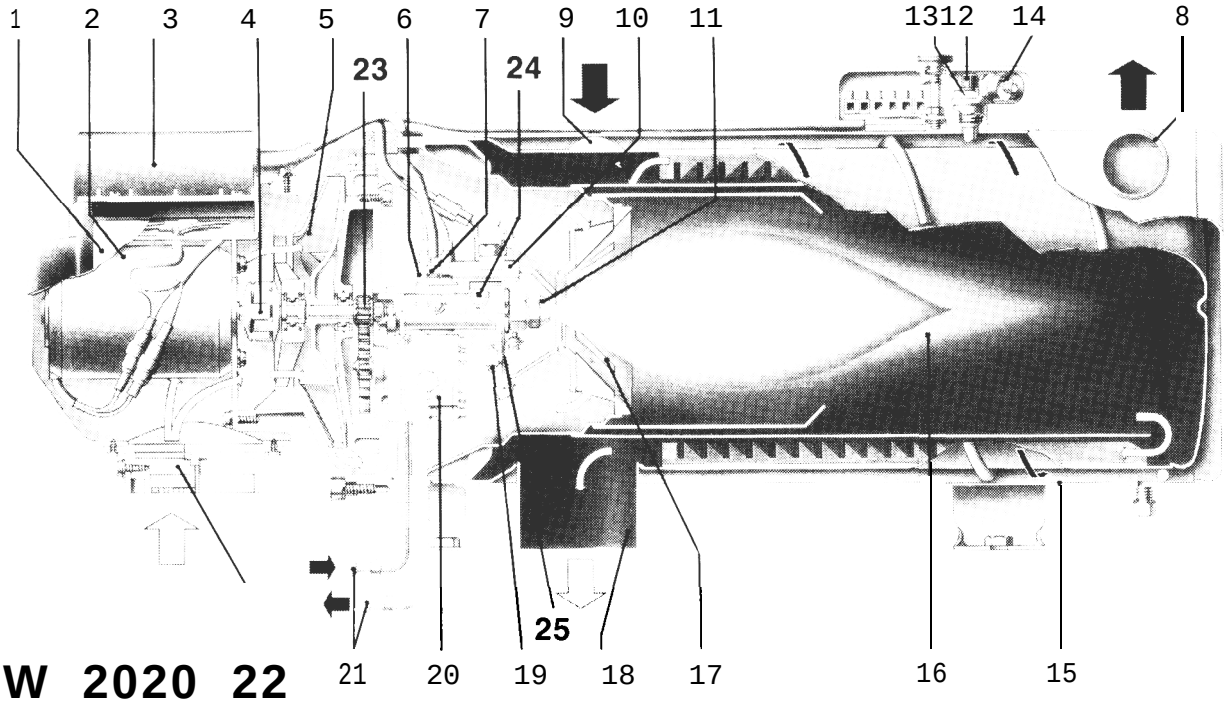

DBW 2020 22
DBW 300

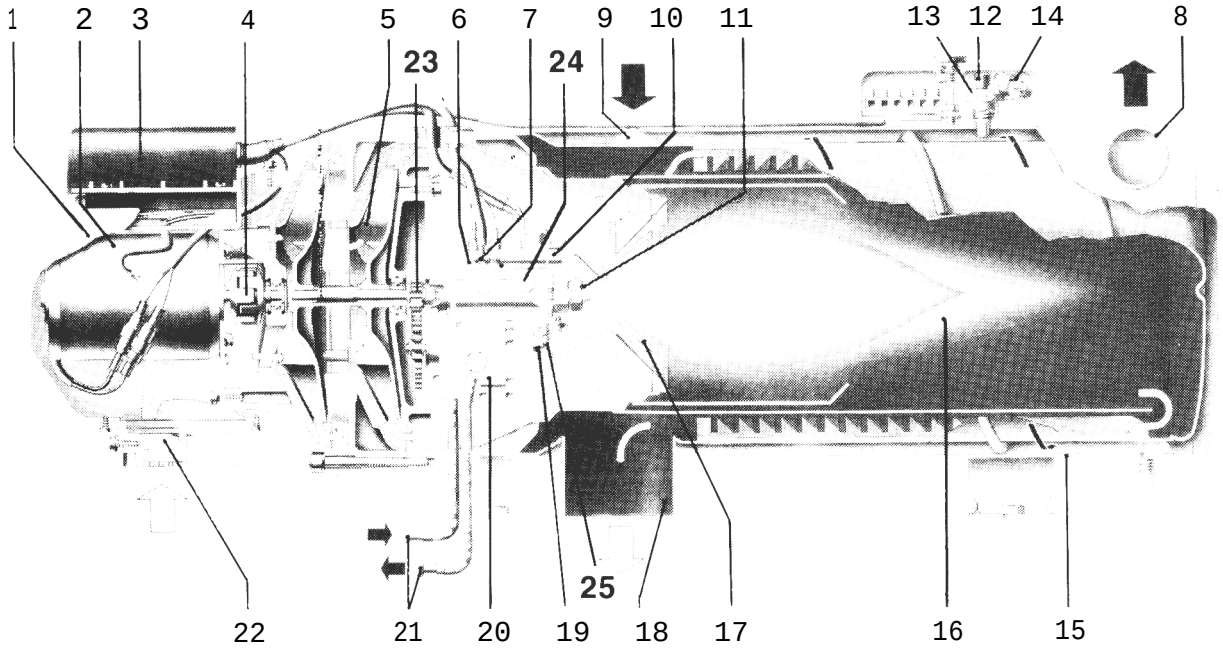

DBW 350

2.1 DESCRIPTION OF OPERATION

1. Light green: operation indicator, control thermostat
2. Water circulation pump, negative heater
3. Heater motor
4. Electronic ignition unit
5. Solenoid valve
6. Flame detect
7. Control thermostat
8. Switch on
9. Start
10. Combustion
11. Control pause starts
12. Control pause ends
13. Switch off
14. Heater stops
15. Initial cycle
16. Safety delay time
17. Purge cycle

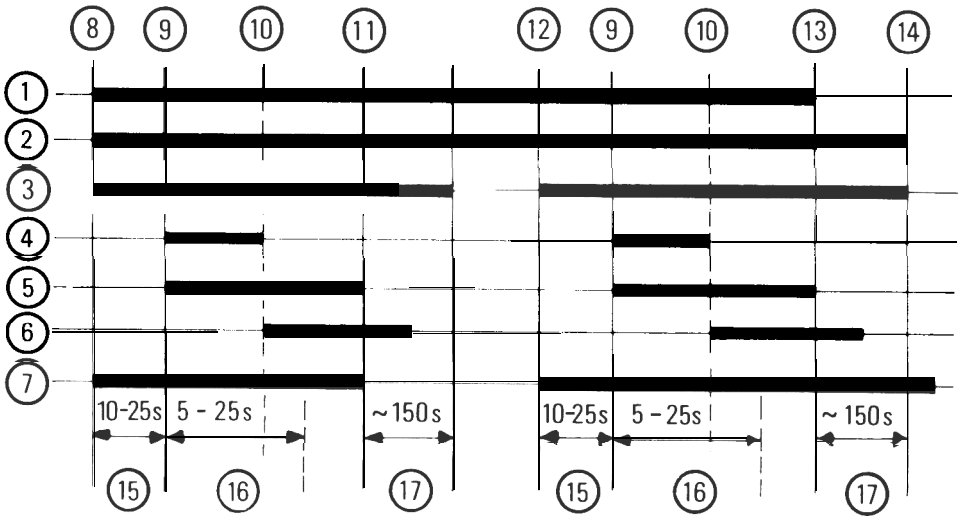

Use the switch to start the Webasto heater, The operation indicator lamp (1) comes on, the heater motor (3) and coolant circulating pump (2) begin to run. After about 10-25 seconds solenoid valve (5)opens and fuel is sprayed into the combustion chamber. At the same time electronic ignition unit produces high voltage (8000V) and the mixture of fuel and air in the combustion chamber is ignited by the spark on the ignition electrodes. The flame is indicated by the flame detector, then the electronic ignition unit stops producing high voltage and combustion continues by itself (spark on electrodes is required only to ignite the flame). At this moment the heater is working and produces heat.

interrupts fuel supply, combustion stops and indicator lamp turns off, Combustion air fan still blows air, cleaning the combustion chamber of any fumes and cooling down the combustion chamber. Coolant circulation pump pumps coolant, making a purge cycle for approximately 2-3 minutes, thus protecting heater against overheating.

If the heater is not switched off by the on/off switch, the control thermostat will switch off the heater when coolant temperature reaches 75° ± 3° C (165° ± 6° F) and turn it on at 68° ± 5° C (154° ± 9° F). During this time the heater (combustion) is off, the indication lamp and coolant pump are on. Combustion air fan blows air for 2-3 min. and then turns off.

3. PARTS OF THE HEATER

3.1 Electronic control unit (1)

Description: The electronic control unit serves to switch the heater on and off, to control the different components of the motor, the solenoid valve, the ignition spark coil, and to check the combustion.

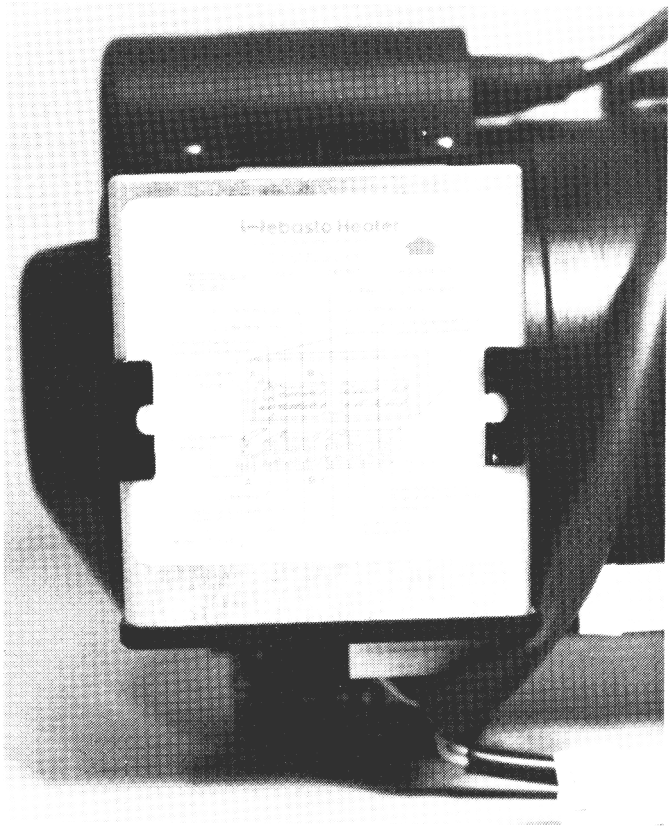

The signals of the flame detector, the control thermostat and the overheat fuse are utilized, accordingly, for this purpose. In case the functions are defective, the control unit switches the heater automatically off.

Checks: A check-up of the control unit is possible only if the incoming as well as the outgoing signals are simulated. The testing apparatus (see item 7.2) comprises all the necessary parts for a complete function test of the control unit.

A defective control unit must not be repaired but has to be completely exchanged,

Remarks: if the electronic control unit is exposed to heat impact (max. 60° C (140° F), e.g. in the mounting case), it should be moved to a cooler position (possibly by extending the wiring harness).

3.2 Motor (2)

Description: The motor, through a coupling, drives the combustion air fan, and through a toothed gearing, the fuel pump.

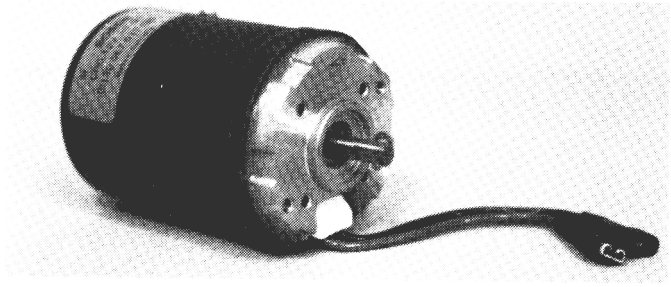

Rated motor r.p.m.:	DBW 2010	4500 RPM
	DBW 2020	5000 RPM
	DBW 300	5800 RPM
	DBW 350	5600 RPM

Checks: Check the mounting condition (rough running). The single parts of the motor cannot be exchanged. The cables and the drain hole must show downwards.

3.3 Combustion air intake — regulation (22)

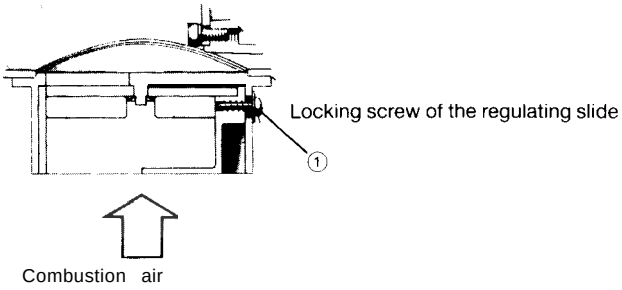

Description: The regulation of the combustion air at the intake socket serves to relate exactly the combustion air quantity to the fuel quantity atomized by the high-pressure atomizer nozzle.

Checks: In case the intake socket is loose, it has to be exchanged completely.

3.4 Clutch (4)

Description: The clutch represents the mechanical connection between motor and combustion air fan.

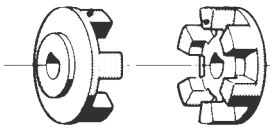

Checks: Before re-using the clutch, it has to be checked for cracks and the condition of the flat portion in the hole. Too much play on the shaft produces loud continuous noise.

3.5 Combustion air fan (5)

Description: The combustion air fan forwards the air necessary for the combustion. There exist different fan types:

DBW 2010	— lateral canal fan
DBW 2020/300	— radial fan
DBW 350	— two-stage radial fan.

Checks: The impeller has to be checked for dirt deposits, grinding traces and cracks.

Only DBW 2010: The looseness of the impeller has to be checked. The narrow point of the split between impeller and fan case (measurable with a spy) has to be set to0.15 ±0.05 mm with a hexagon nut on the shaft.

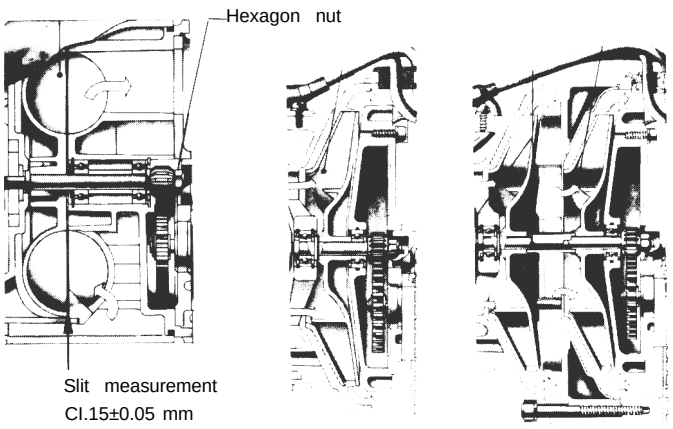

DBW 2010 DBW 2020/300 DBW 350

Only DBW 2020/300: The hub of the impeller has to be checked for cracks, and the cover disc (backwell) as to its stability.

3.6 Toothed gearing

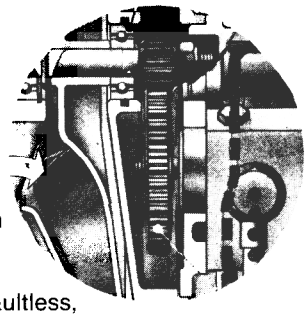

Description: The gears drive the fuel pump with a gear ratio of 1:3.5.

Checks: If signs of wear are showing within the sector of the toothed gearing as well as at the flat portion of the entrainer in the hole of the biggest gear, the gears have to be exchanged. If the gears are still faultless, it is recommended to re-lubricate with grease Isoflex LDS 18 of Kübler — max. 0.5 cm³, evenly distributed within the gears sector.

3.7 Fuel pump (20)

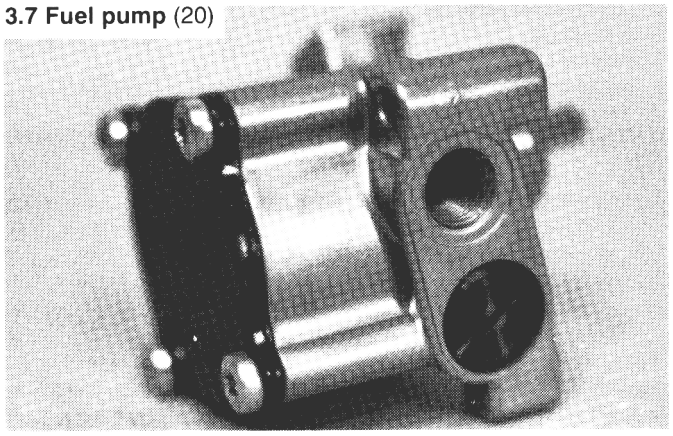

Description: The fuel pump (single-staged toothed pump) delivers the fuel from the tank to the heater and brings it to a pressure of 8–0,5 bar (116–7 psi) for DBW 2010, 10±0,5 bar (145±7 psi) for DBW 2020, 300, 350.

Checks: When mounted, the following measures can be taken:

1. check the cover sealing and the fuel connections for tightness;
2. check the pressure regulation valve if dirty; an obstructed air relief drill hole may be cleaned with compressed air; in case the dirt is pressed into the O-ring of the regulation piston, the pressure regulating valve has to be exchanged;
3. check the strainer on the suction side fuel intake for dirt and clean if necessary;
4. set the pump pressure (see also item 6.18).

In order to control the shaft packing and the entrainer disc, the fuel pump has to be dismounted.

3.8 Solenoid valve (6)

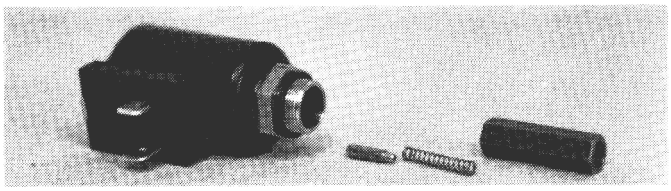

Description: The solenoid valve interrupts the fuel supply when the heater is switched off. When there is no current, the solenoid valve is closed.

Checks: The electrical function and the tightness of the solenoid valve have to be controlled. The opening voltage is for

heater 12V	8 V
heater 24V	17 V.

A leaky zero adjustment (solenoid valve) and a dripping atomizer nozzle are indicated by after-smoking during the purge cycle (there may also happen a short after-smoking if the space between the solenoid valve and the nozzle is emptid; this is normal).

The gasket disc on the armature has to be controlled as to damage; exchange the armature if necessary.

3.9 Fuel nozzle (nozzle holder) (11)

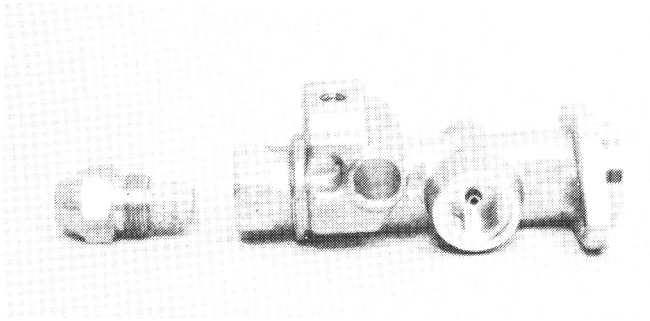

Description: The fuel nozzle is screwed into the nozzle holder; it atomizes the fuel.

Checks: Do not clean the nozzle bore hole and the slits with solid objects as wire or drawing pins; do not blow with compressed air, The sealing surfaces on the high-pressure nozzle and the nozzle holder have to be undamaged, clean and without grooves.

The high-pressure nozzle can be checked as to its regular atomizing on the ignition electrodes with the burner opened and the plug withdrawn.

A high-pressure nozzle obliquely spurting or very dirty has to be replaced.

3.10 Ignition electrodes (10)

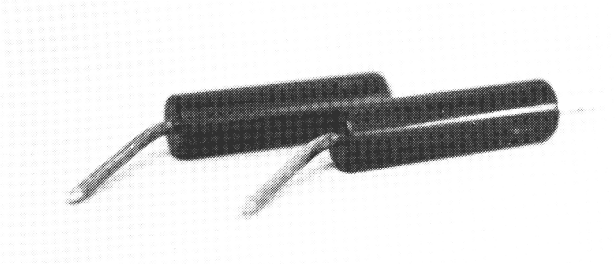

Description: The ignition spark is formed between the points of the ignition electrodes, thus introducing the combustion process.

Checks: Only the condition of the insulation body has to be controlled. It must not show any cracks or damages.

The distance between the ignition electrodes can be checked and regulated with a gauge (see item 6.9).

3.11 Flame detector (19)

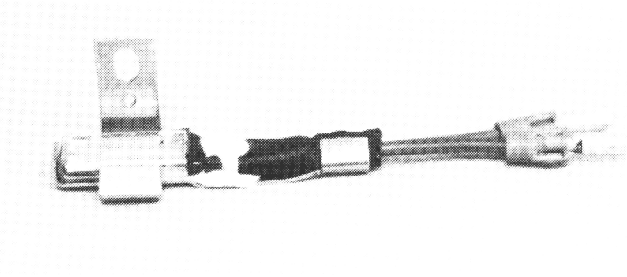

Description: The flame detector is a photosensitive resistance feeding the electronic control unit with the signal “flame”.

For checking – see instructions on page 21, item 6.8.
Attention — the disc has to be plane.

3.12 Fuel line on the heater (21)

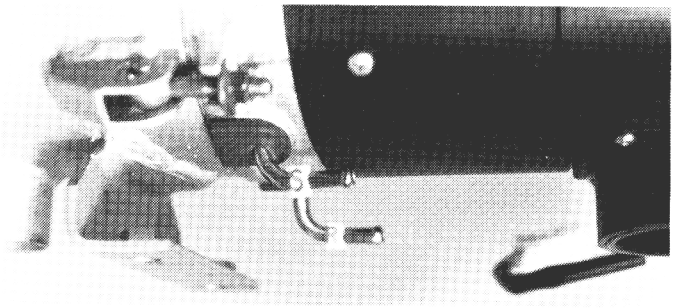

Description: The fuel pipes from the fuel tank are connected to the fuel suction pipe and the fuel return pipe on the heater.

Checks: The fuel hose has to be perfectly tight and without kinks, It must not pucker when the hose clip is tightened.

The fuel pipes on the heater as well as the fuel hose have to be replaced when defective.

3.13 Combustion chamber (16), **Combustion air swirler** (17)

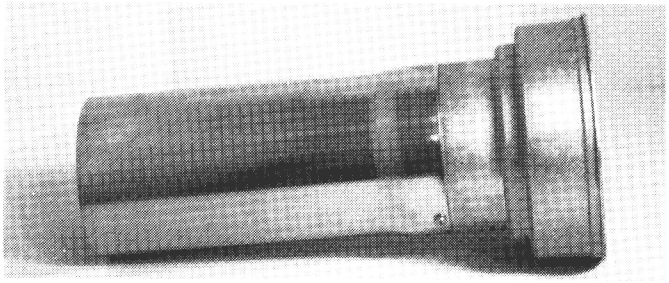

Description: Within the burner tube of the combustion chamber the fuel-air mixture, prepared by the high-pressure nozzle, is burned.

Checks: Soot deposits have to be removed.

Only DBW 2010: In case the twist body has been damaged by a too intensive heat effect, the combustion chamber and the flame detector have to be replaced.

Note — It is important that the combustion chamber is cleaned and inspected periodically.

3.14 Heat exchanger (15)

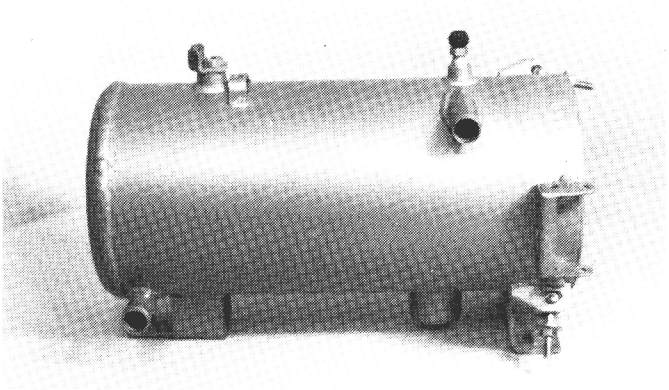

Description: The heat, produced by the combustion, is transmitted to the medium (coolant mixture) flowing through the heat exchanger.

Checks: Combustion residue has to be removed with a jet of water and a brush.

Exterior damages, as big marks caused by pressure, may affect the coolant flow.

3.15 Electronic ignition unit (3)

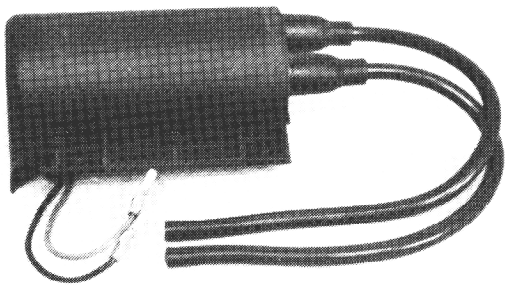

Description: Within the electronic ignition unit, a high voltage of approx. 8000 volt is generated and brought to the two ignition electrodes. The electronic ignition unit is only in operation during the starting phase.

Checks: When connecting a direct current of 12 V resp. of 24 V (positive to black, and negative to brown cable), the sparks must spring over on the ignition spark track.

Attention: Never switch on the electric ignition unit without the ignition electrodes.

3.16 Overheat fuse (12), **Temperature limiter** (green wires) (14)

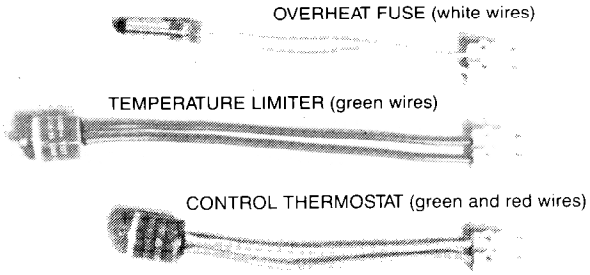

Description: The overheat fuse protects the heater against too high and inadmissible temperatures. The overheat fuse contains a fusible link reacting when the admissible temperature is exceeded (138° C [280° F]), and switches the heater off with a purge cycle.

The temperature limiter is a thermostat which, after having been released (95° C [203° F]), can be reset by restarting the heater only if coolant temperature is below 95° C (203° F).

The deliverable overheat fuses, fusible links and temperature limiter are listed in the respective spare parts lists.

Checks: The electrical volume has to be checked. At room temperature, the contact is closed.

3.17 Control thermostat (green and red wires*) (13)

Description: After the operation temperature has been reached the control thermostat assumes the intermittent operation. By alternative switching on and off, the temperature of the heat medium is maintained at a constant level.

Switching temperature:

I Version	— closes at	68 ±5° C (154 ±9°F)
	— opens at	75 ±3° C (167 ±6°F)
II Version*	— closes at	60 ±5° C (140 ±9°F)
	— opens at	70 ±3° C (158 ±6°F)

Checks: The electrical volume has to be checked. At room temperature, the contact is closed, and when the temperature rises above the upper switching point, it opens.

Remarks: Only 2020, 300 and 350. Optional control thermostat (see item 12 on pages 9 and 10) could be mounted in the heating system, instead of the control thermostat located on the heater.

*Second version of the control thermostat with white and orange wires.

3.18 Pre-heat thermostat (blue and green wires) (25)

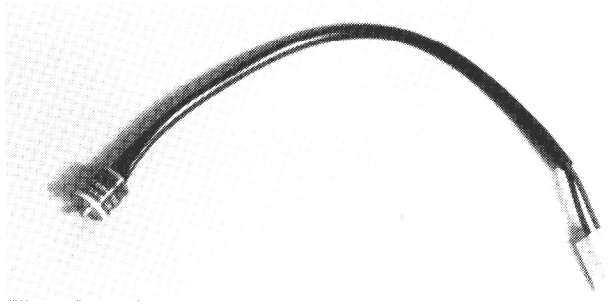

Description: The pre-heat thermostat is installed in the burner on the back wall (2010) or on the disc (2020, 300, 350). It switches the heating element (24) which warms up the fuel in the nozzle holder.

Switching temperature: — closes at 0° C (32 “F)
— opens at 8° C (48° F)

Checks: The electrical volume has to be checked. At room temperature the thermostat opens. It closes when the temperature drops under 0° C and opens at 8° C.

3.19 Pre-heater (24)

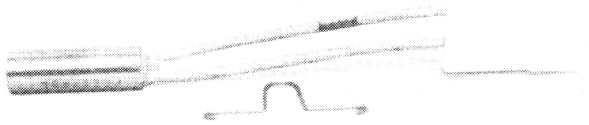

Pre-heater is a heating element located in the nozzle holder. Operated by pre-heat thermostat (green and blue wires) heats fuel when the temperature drops under 0° C (32° F).

3.20 **Coolant circulating pumps U 4810 / U 4814 / U 4816**

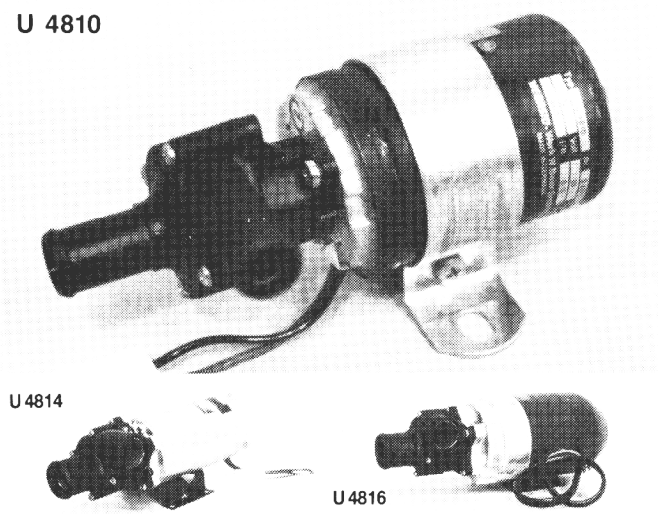

Description/installation: The circulating pump is mounted into and connected to the cooling respectively, the heating cycle. Technical data of the circulating pumps see item 1.2 and the installation instructions of the respective heaters.

NOTE — when connecting the circulating pump electrically, do not mix the cable colours (see wiring diagrams — item M 1 on pages 8-10) otherwise the rotation is incorrect.

Checks: The pump housing has to be checked for its tightness. In case coolant flows out (see item 6.19 on page 26).

Hose connections and hose clips have to be tight, A defective circulating pump may cause the heater to overheat.

Only U 4816: Check the length of the carbon brushes.

4. ELECTRICAL SCHEMATICS

4.1 DBW 2010 12 V AND 24 V

DS	INDICATOR LIGHT
E	IGNITION ELECTRODES
F1	FUSE 7.5A
F2	FUSE 25A
HR	HEATING ELEMENT (fuel pre-heating)
K	RELAY (fuel pre-heating)
L1	SOLENOID VALVE
L2	IGNITION COIL
M1	COOLANT CIRCULATING PUMP
M2	HEATER MOTOR
P1	TIMER (72 HOUR OR 10 DAY)
P2	TIMER (24 HOUR)
P3	TIMER (7 DAY)
R	FLAME DETECTOR
S1	ON / OFF SWITCH
S2	PRE-HEAT (FUEL) THERMOSTAT (blue and green wires)
S3	CONTROL THERMOSTAT (white and orange wires)
S4	TEMPERATURE LIMITER (green and green wires)

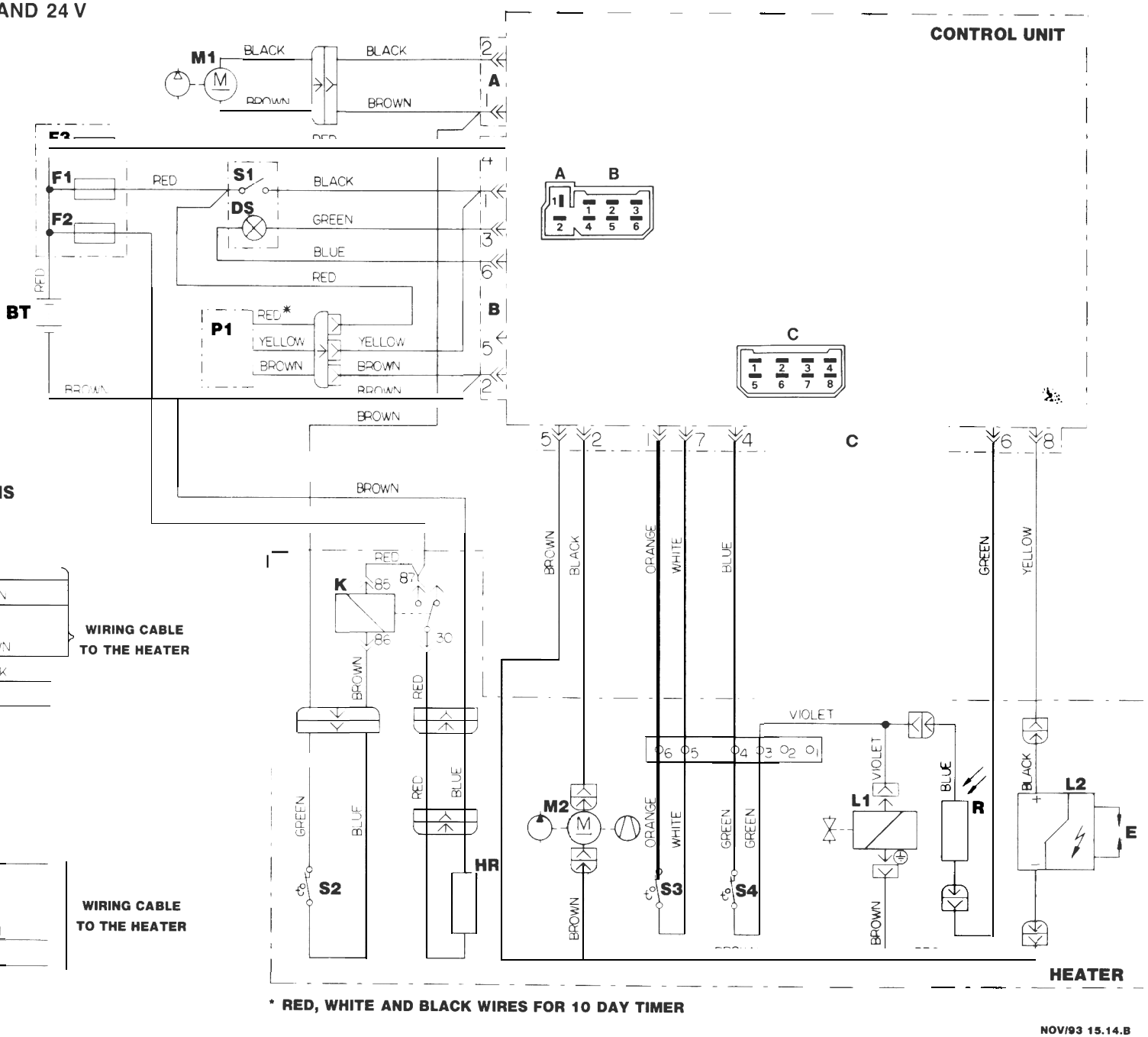

24 HOUR TIMER CONNECTIONS

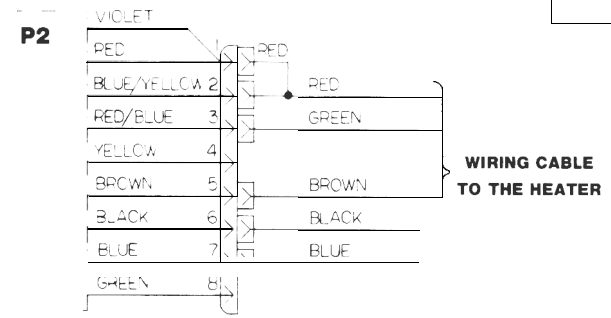

7 DAY TIMER CONNECTIONS

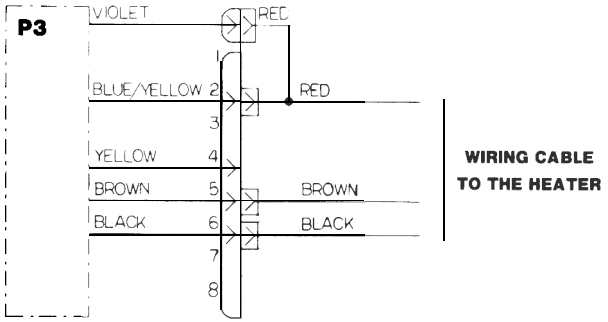

* RED, WHITE AND BLACK WIRES FOR 10 DAY TIMER

NOV/93 15.14.B

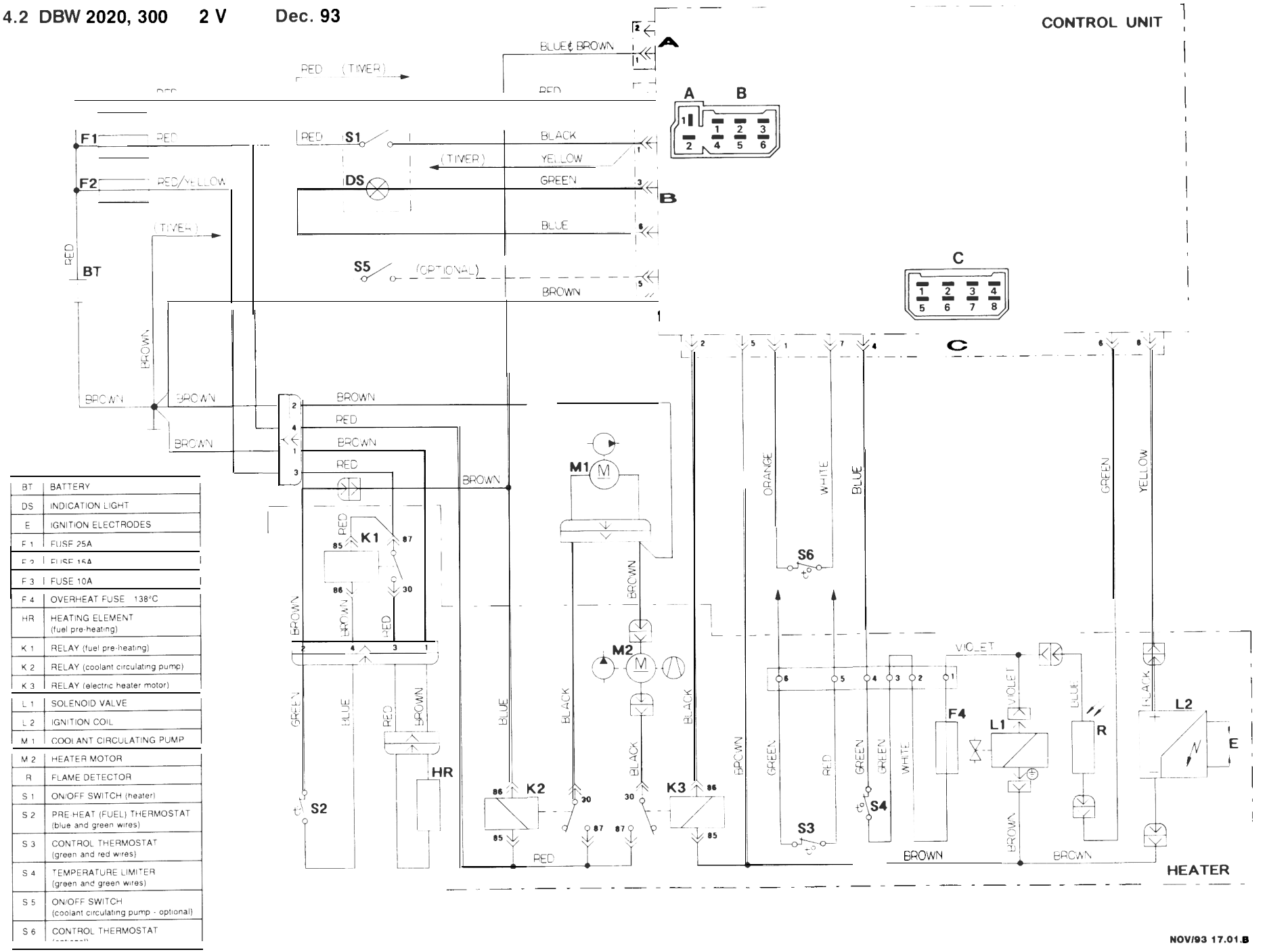

BT	BATTERY
DS	INDICATION LIGHT
E	IGNITION ELECTRODES
F 1	FUSE 25A
F 2	FUSE 15A
F 3	FUSE 10A
F 4	OVERHEAT FUSE 138°C
HR	HEATING ELEMENT (fuel pre-heating)
K 1	RELAY (fuel pre-heating)
K 2	RELAY (coolant circulating pump)
K 3	RELAY (electric heater motor)
L 1	SOLENOID VALVE
L 2	IGNITION COIL
M 1	COOLANT CIRCULATING PUMP
M 2	HEATER MOTOR
R	FLAME DETECTOR
S 1	ON/OFF SWITCH (heater)
S 2	PRE HEAT (FUEL) THERMOSTAT (blue and green wires)
S 3	CONTROL THERMOSTAT (green and red wires)
S 4	TEMPERATURE LIMITER (green and green wires)
S 5	ON/OFF SWITCH (coolant circulating pump - optional)
S 6	CONTROL THERMOSTAT

NOV/93 17.01.B

4.3 DBW 2020, 300 12 V and 24 V (12 V since Jan. 94; for older models, see page 10)

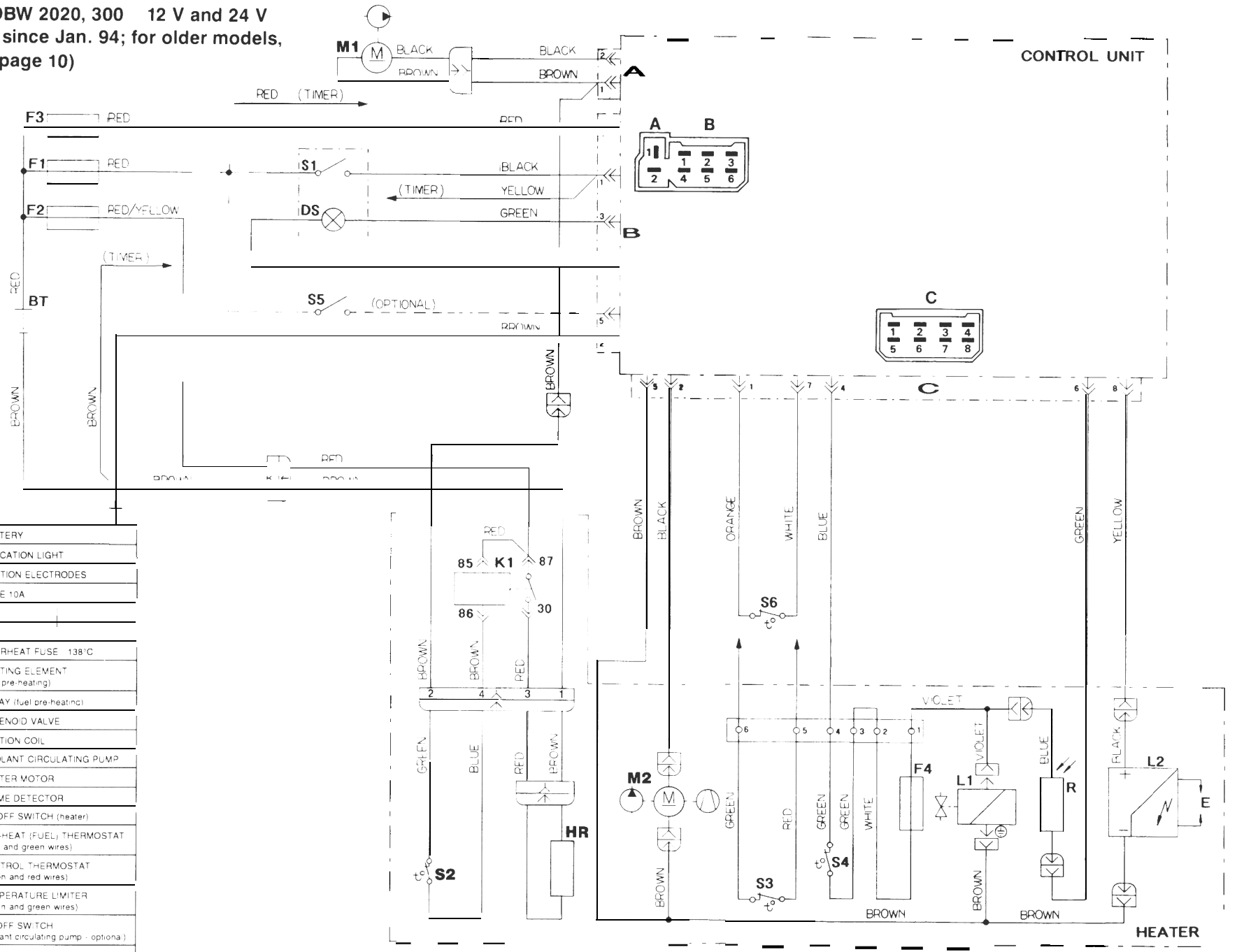

BT	BATTERY
DS	INDICATION LIGHT
E	IGNITION ELECTRODES
F 1	FUSE 10A
F 4	OVERHEAT FUSE 138°C
HR	HEATING ELEMENT (fuel pre-heating)
K 1	RELAY (fuel pre-heating)
L 1	SOLENOID VALVE
L 2	IGNITION COIL
M 1	COOLANT CIRCULATING PUMP
M 2	HEATER MOTOR
R	FLAME DETECTOR
S 1	ON/OFF SWITCH (heater)
S 2	PRE-HEAT (FUEL) THERMOSTAT (blue and green wires)
S 3	CONTROL THERMOSTAT (green and red wires)
S 4	TEMPERATURE LIMITER (green and green wires)
S 5	ON/OFF SWITCH (coolant circulating pump - optional)
S 6	CONTROL THERMOSTAT (optional)

4.4 IDENTIFICATION OF TERMINALS OF CONTROL UNIT — 12 Volt only

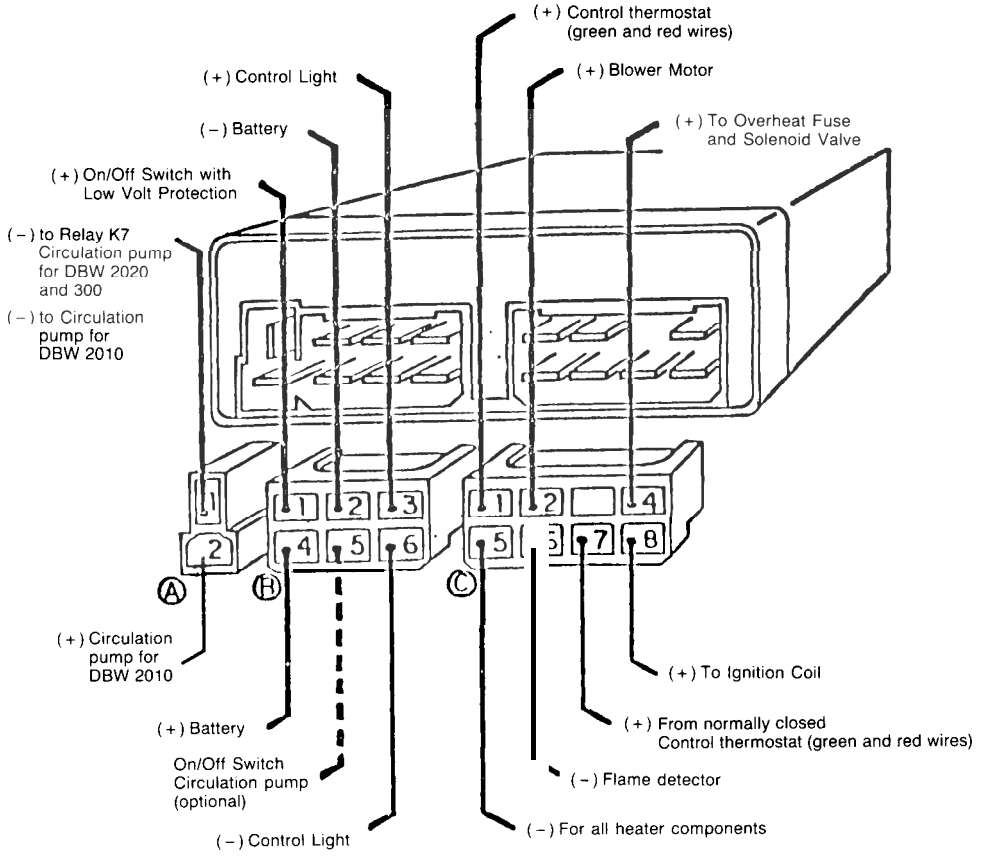

4.5 IDENTIFICATION OF TERMINALS OF CONTROL UNIT — 24 Volt only

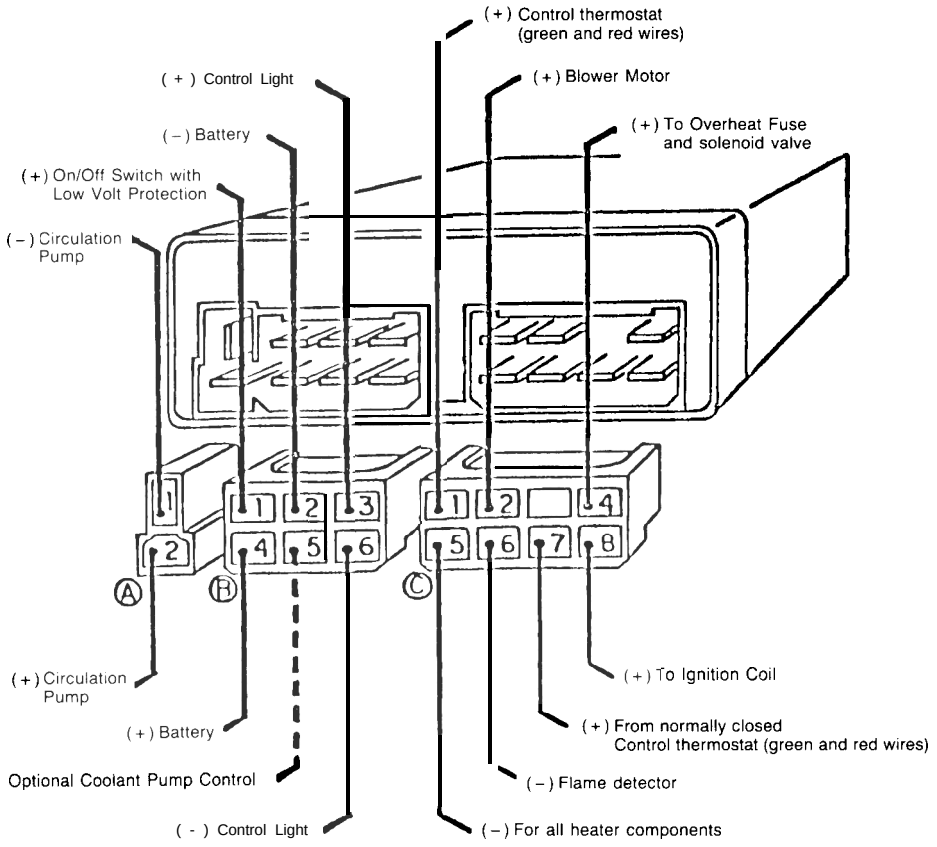

5. TROUBLE SHOOTING

5.1 QUICK CHECK

PROBLEM		CHECK, REPAIR OR REPLACE IF NECESSARY																						
		Check Voltage Supply	Electrical Fuse	Electrical Harness and Connection	Switch	Overheat Fuse or Temperature Limiter (green wires)	Control Thermostat (green and red wires)	Flame detector	Control Unit	Ignition Electrodes	Ignition Coil — Coil Wire	Electric Motor	Fuel Supply	Fuel Pump	Fuel Solenoid Valve	High Pressure Nozzle	Coolant Circulating Pump	Combustion Air Intake	Exhaust System	Heating System
Switch On	No Function	●	●	●	●		●																	
Control Light	OFF after 30 Seconds					●		●	●	●	●	●	●	●	●									
Blower Motor in Unit	Does Not Run	●	●	●			●		●			●												
Blower Motor in Unit	No Prime Cycle	●							●															
Blower Motor in Unit	No After Run								●															
Coolant Circulation Pump	Does Not Run	●	●	●					●			●												
Ignition Spark	Absent		●	●				●	●		●													
Combustion	Does Not Take Place					●			●	●	●		●	●	●	●								
Combustion	Stops after 30 Seconds	●		●				●	●															
Combustion	Cannot Be Stopped				●				●						●									
During Combustion	Light Colour Smoke												●	●		●								
During Combustion	Dark Colour Smoke	●			●							●	●						●	●				
Heating Unit	Overheating			●		●		●								●				●				

5.2 TESTER INSTRUCTIONS (TESTER PART #440-280)
For Heaters DBW 2010 / 2020 / 300 — 12 or 24 Volt

The tester unit has been designed to quickly check the proper operation of the various heater components. By using the tester in place of the heater control unit, you are able to manually control the heater to test components and actually operate the unit in heating mode.

The actual testing is completed in two steps, first you do an individual components test and then a manual start and run test, both designed to pinpoint actual problems in the heater system.

The tester should be used in conjunction with the Service and Repair Manual #699,745 for DBW 2010/ 2020/ 300 heaters which details complete troubleshooting and repair procedures.

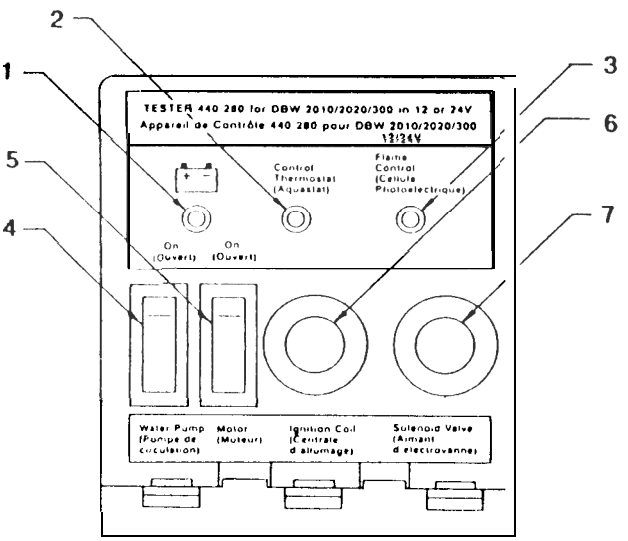

1 LED Input power to heater
2 LED - Control thermostat
3 LED Flame detector
4 On/Off switch circulating pump
5 On/Off switch motor
6 push button - ignition spark generator
7 push button - fuel solenoid valve

TEST PROCEDURES

1. Set-Up:

A Remove connector blocks from heater control unit, Inspect for loose wires, corrosion and proper wire connections.

B Plug control unit connector blocks into tester
Note — Make sure WATER PUMP and MOTOR switches 4 and 5 are in the "OFF" position

C Put heater swltch/tlmer to "ON" and turn vehicle heater valve to "FULL" mode (if equipped)

D Proceed to component test procedures.

2. Component Test Procedures:

• WARNING •

DO NOT ATTEMPT TO TEST OR RUN HEATER WITH BURNER HEAD OPEN. ENSURE BURNER HEAD IS PROPERLY CLOSED AND SECURED IN PLACE.

Test Step	Result	If not:
A Tester connected	- BATTERY LED 1 unit lights up	- test input voltage at control terminals B4 (+) and B2 (-) - check battery connections - check battery voltage
	- CONTROL THERMOSTAT LED 2 lights up	- test switch/timer - test control thermostat on heater

Note — Since the heater operates in the 60°C to 70°C (On to Off/Off to On) range, if the vehicle engine IS hot (e.g. coolant above 70°C), the heater WiII not start until the coolant temperature drops below 60°C. THIS IS NORMAL.

B Push FUEL SOLENOID VALVE button 7 several times	- clicking of solenoid should be heard	- test temperature fuse iIf equipped) - test solenoid valve
C Push ignition spark coil button 6	- sparking should be heard	- check electrode gap - test igniltion spark coil
D Turn MOTOR switch 5 on	- motor should run	- test motor
E Turn WATER PUMP switch 4 on	- pump should run	- test pump

3. Manual Test Run of Heater:

• WARNING •

DO NOT ATTEMPT TO TEST OR RUN HEATER WITH BURNER HEAD OPEN. ENSURE BURNER HEAD IS PROPERLY CLOSED AND SECURED IN PLACE.

A Turn WATER PUMP switch 4 "ON".

B Turn MOTOR switch 5 "ON"

C. Push and hold FUEL SOLENOID VALVE button 7 "ON" (starts fuel flow to combustion chamber)

D Push and hold IGNITION SPARK COIL button 6 "ON" (starts electrodes sparking) until combustion has taken place.

Note — Hold IGNITION SPARK COIL button "ON" until FLAME DETECTOR LED 3 lights or combustion is heard, then release; in any case, do not hold button on for more than 15 seconds.

Results:

1 LED 3 lights and combustion achieved
- operation normal

2 Combustion achieved but no LED 3 light
- check flame detector

3 Combustion not achieved and no LED 3 light
- check fuel nozzle
- check fuel pressure
- check for blocked fuel lines (dirt or ice)
- check ignition electrodes for damage and set gap

E Heater should now be in heating mode and will continue to run until you release the fuel solenoid valve button 7 which stops fuel flow and extinguishes flame immediately. Allow heater to continue running (for cool down) approximately 30 seconds and then turn WATER PUMP switch 4 and MOTOR switch 5 "OFF".

Note – If flame does not stop when the FUEL SOLENOID VALVE button 7 is released, turn MOTOR switch 5 "OFF" to stop heater.
- check solenoid valve

F. If manual test run has been successfully completed, turn heater switch/timer "OFF", remove the tester and reconnect the control unit. Once done, turn switch/timer "ON"; if heater does not start, control unit is defective; replace control unit and retest heater.

5.3 INSTRUCTION FOR FAULT FINDING

5.3.1 COMBUSTION STARTS IMMEDIATELY WHEN HEATER IS SWITCHED ON

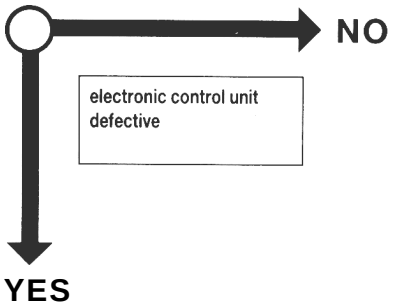

5.3.2 HEATER DOES NOT START WHEN SWITCHED ON

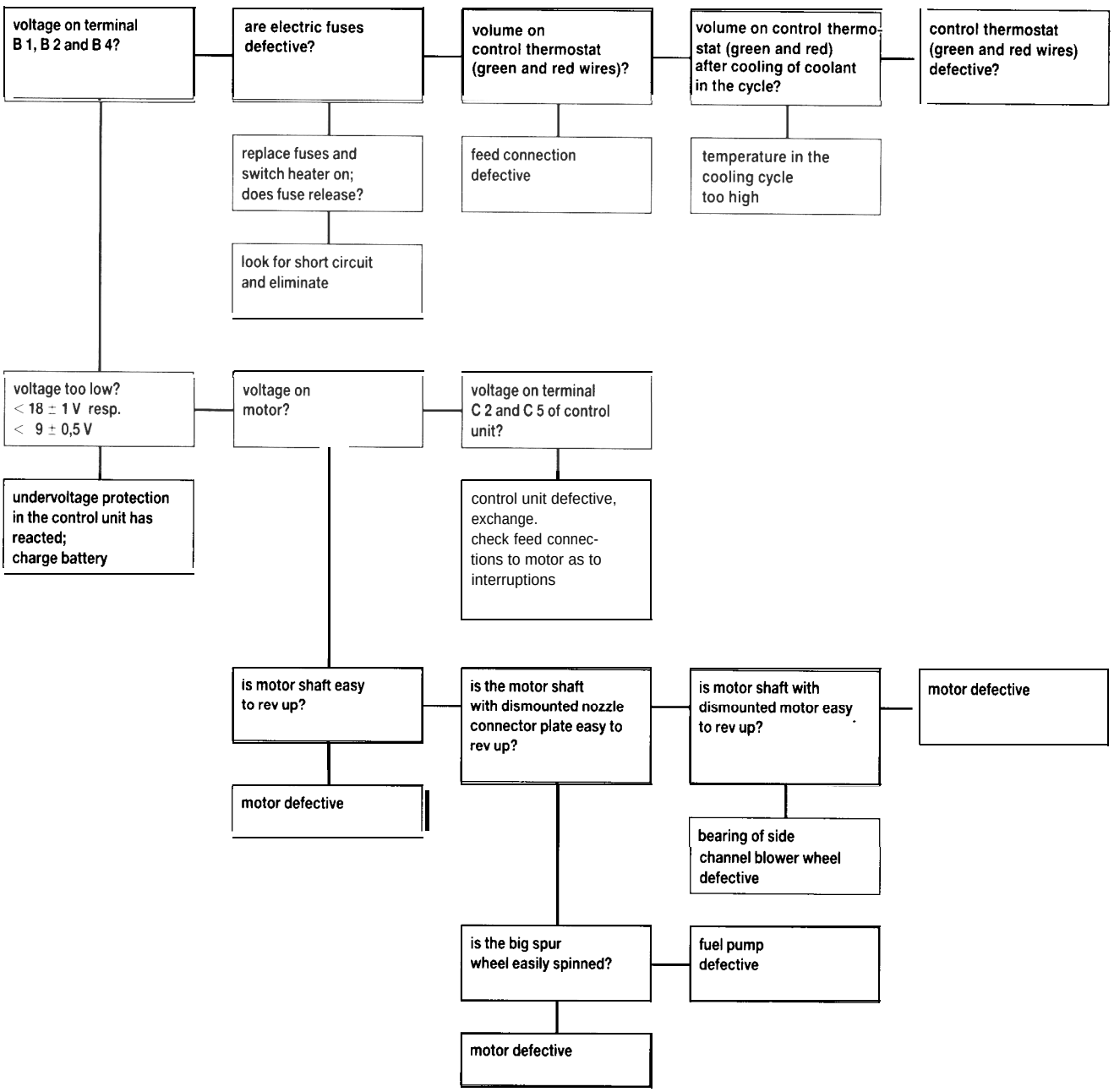

5.3.3 AFTER SWITCHING ON, THE HEATER SWITCHES REPEATEDLY AFTER APPROX. 30 SECONDS ON FAULT

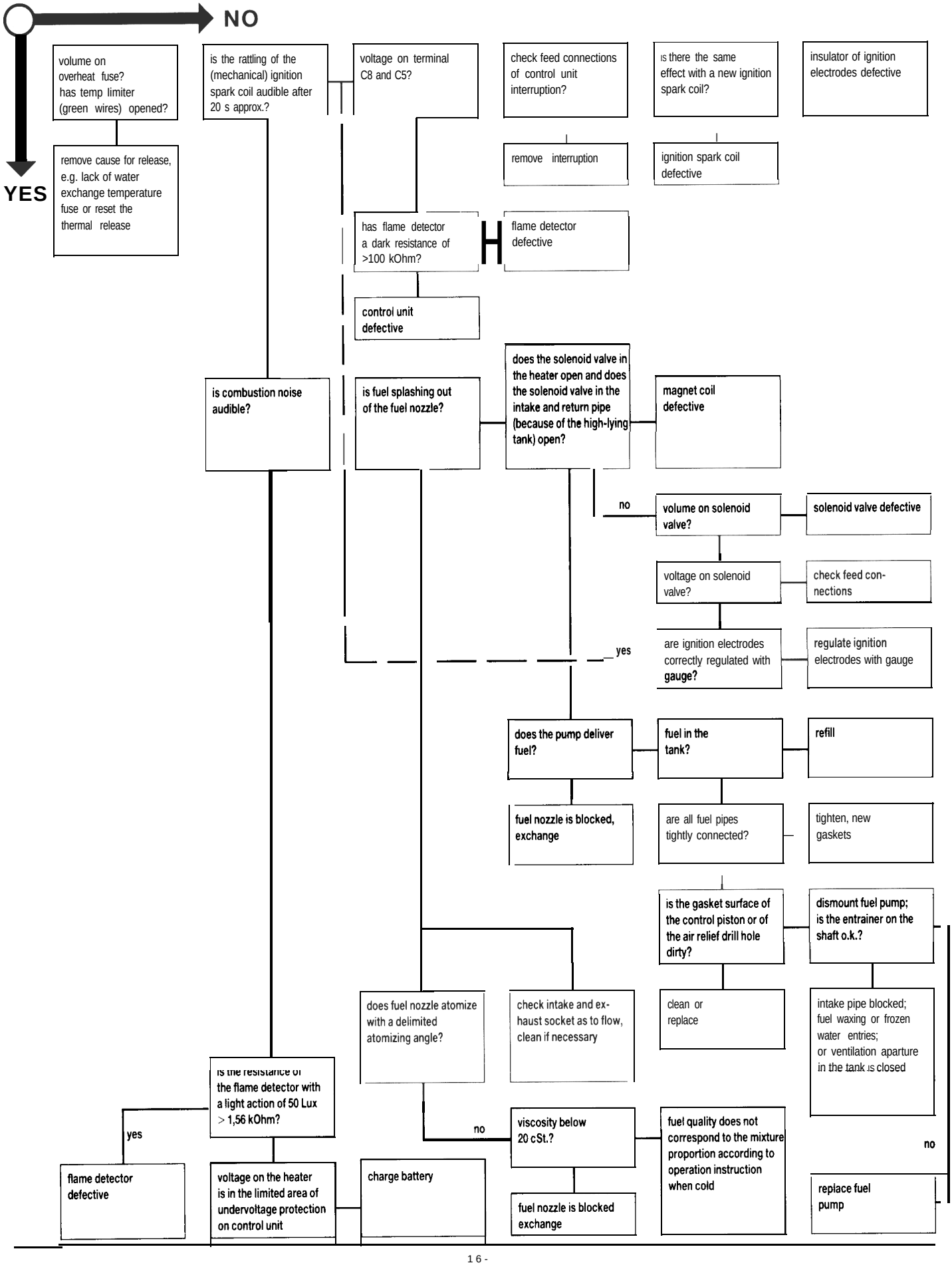

5.3.4 HEATER STARTS ONLY AFTER SEVERAL STARTING ATTEMPTS

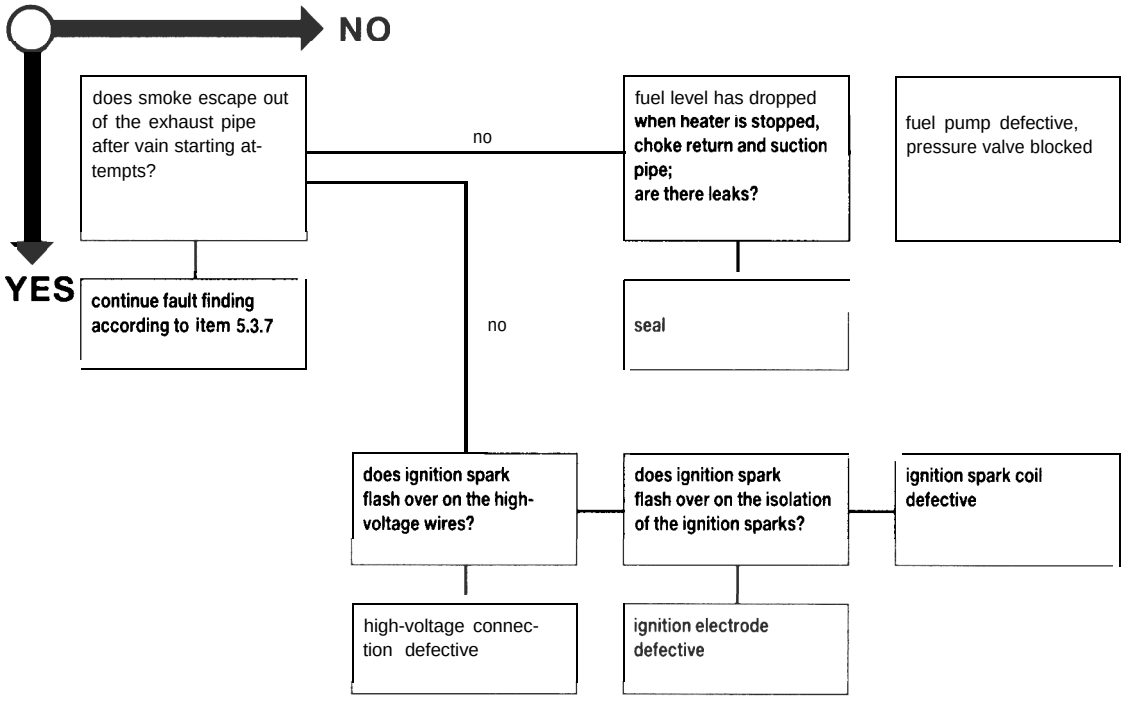

5.3.5 HEATER SWITCHES OFF BY ITSELF DURING OPERATION

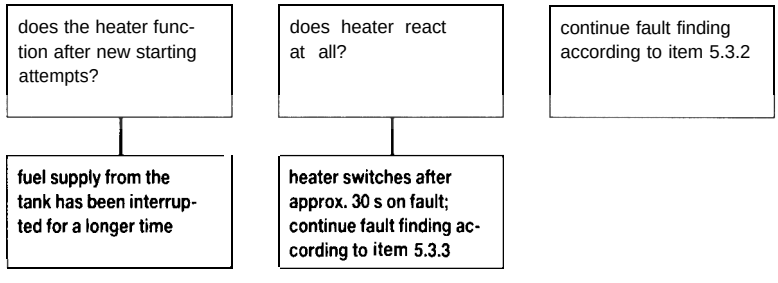

5.3.6 HEATER SMOKES

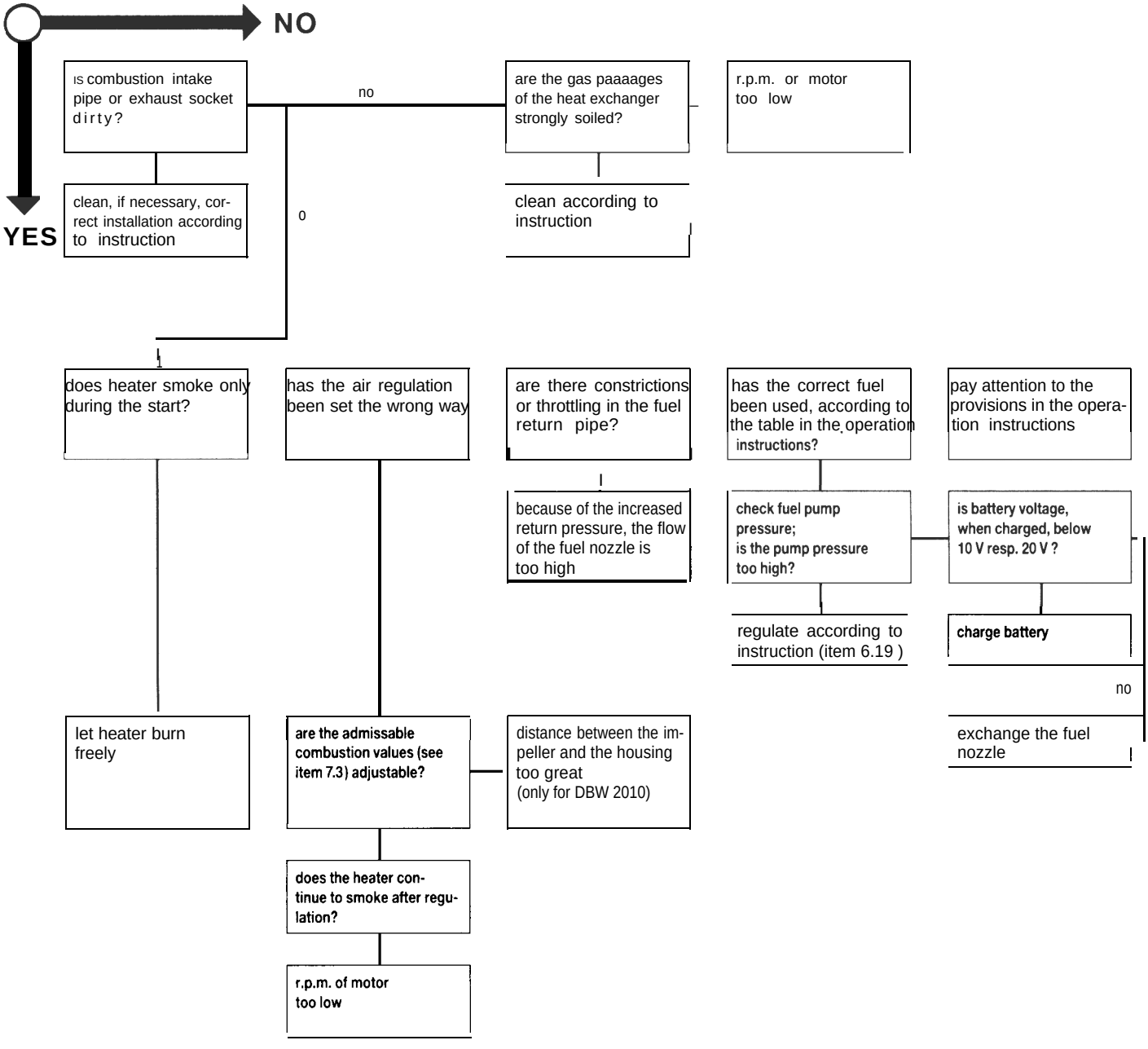

5.3.7 HEATER SMOKES

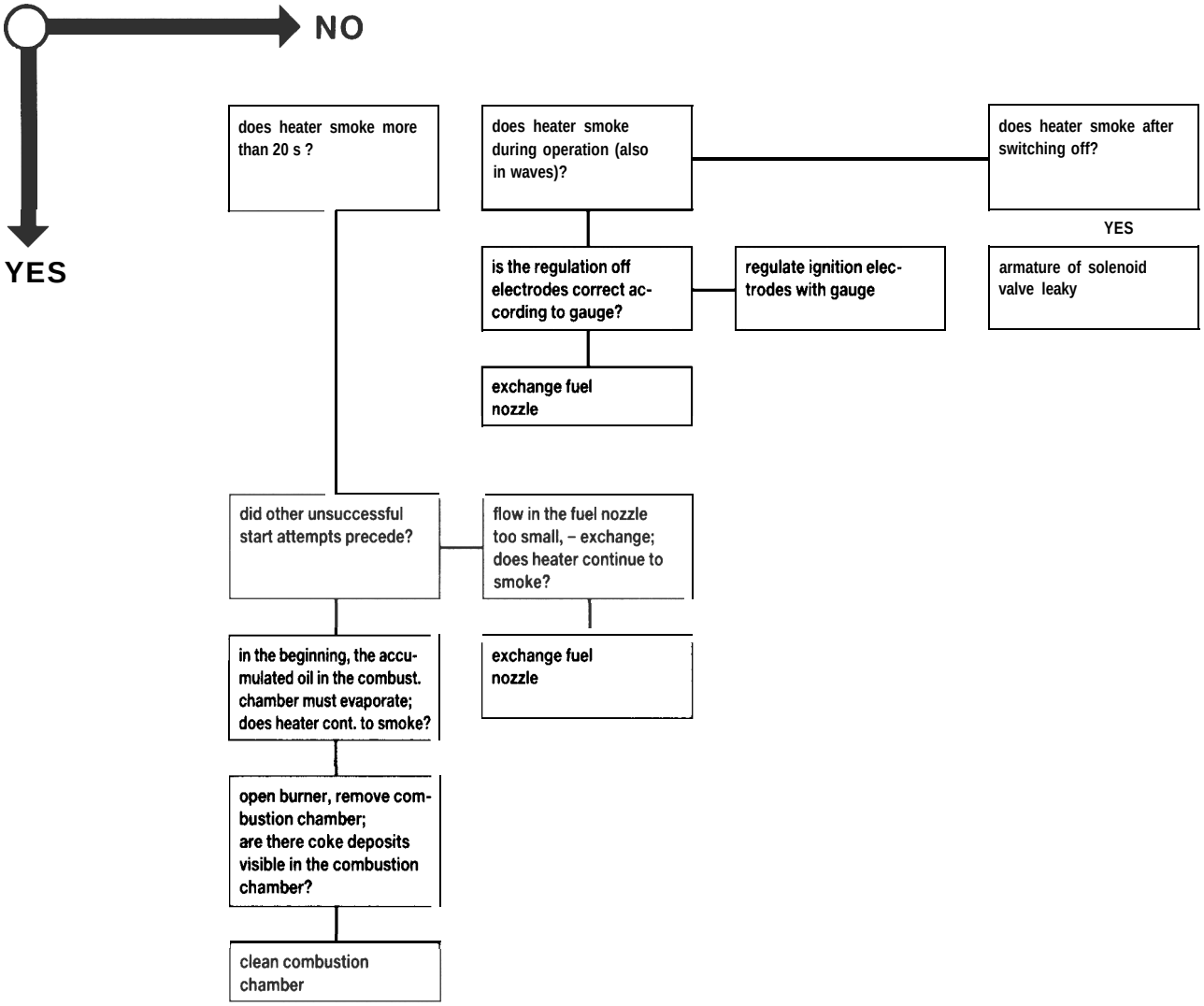

5.3.8 HEATER CANNOT BE SWITCHED OFF

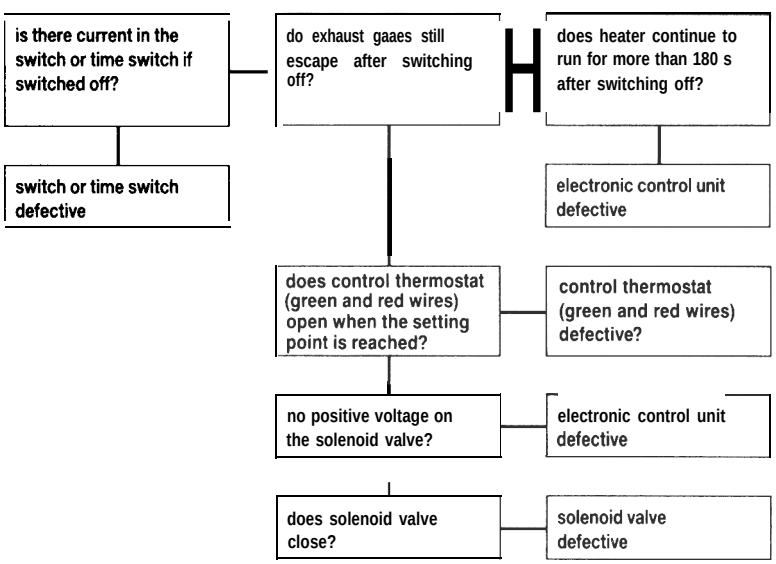

6. REPAIRING INSTRUCTION

6.1 Imporant operating tips

— Maintenance of the heater is necessary for proper operation. Read and understand the manual handbook before you attempt to repair.

— If the vehicle requires electric welding, the heater must be electrically disconnected from the vehicle (both "+" and "-" connections).

— The heater should not be operated in enclosed areas as garages, shops, etc., without connections to an exhaust extraction system.

— The battery must not be disconnected while the heater is running, otherwise the heater will overheat.

— The heater should be shut off when refueling.

— It is recommended that the diesel heater is switched on and operated periodically during the off season (summertime).

— It is very important that the heater is inspected once a year, even if it works properly. A good time to do this is prior to the season for its use.

6.2 Bleeding the cooling system

Check your installation of DBW series Heater. Check for restriction on the system (pinched hoses, air in system, coolant pump operation, polarity of coolant pump electrical connectors, brown wire to A-1 — see pages 8 -11 on control unit), Check coolant inlet and outlet on coolant pump. Coolant inlet to be fed by static pressure of engine cooling system, coolant pump discharge to lower connection on heater. Check mounting position with Webasto installation drawing.

1. Fill cooling system.
2. Disconnect control thermostat (#5 in wiring diagram - pages 8 - 10),
3. Set heater valve to maximum heat, if so equipped.
4. Turn heater on. This will start coolant circulating pump only.
5. Remove urpper heater hose clam~ and push screw driver in between pipe and hose to let air escape. Repeat this at least four times with engine running or use bleeder valve if so equipped (1).

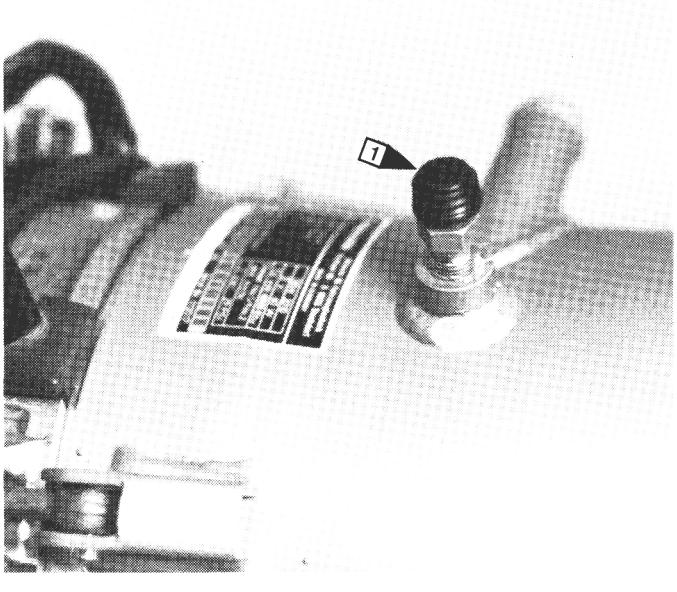

6. Reconnect coolant hose and plug in thermostat. Add coolant. Start heater and check for operation.
7. Temperature differential between coolant inlet and outlet should not exceed 10° C (18° F) after 5 minutes of operation.

6.3 Removing the burner unit

Replacement of certain components in the combustion unit is made easier if the burner unit is first removed and placed on a bench.

1. Remove the cover on the thermostats, and pull out the connection for the overheat fuse (1), control thermostat (2) and temperature limiter (3), unscrew the clamp (4) and lift up the connectors.

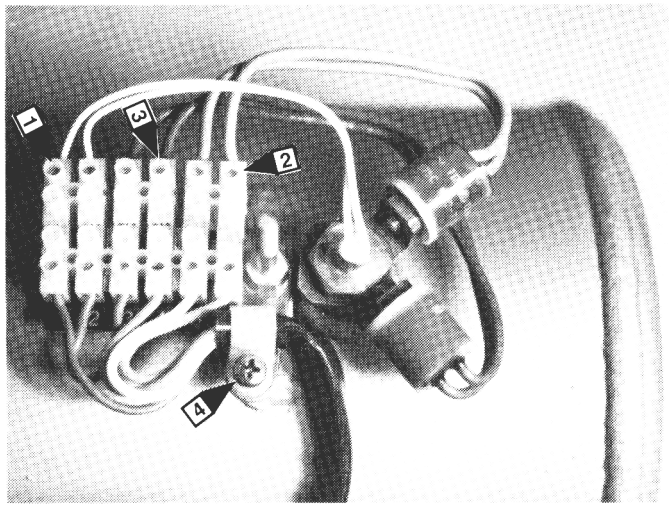

2. Remove block connectors A and B from the control unit and disconnect the fuel lines from the heater connection pipes. Plug the pipes.

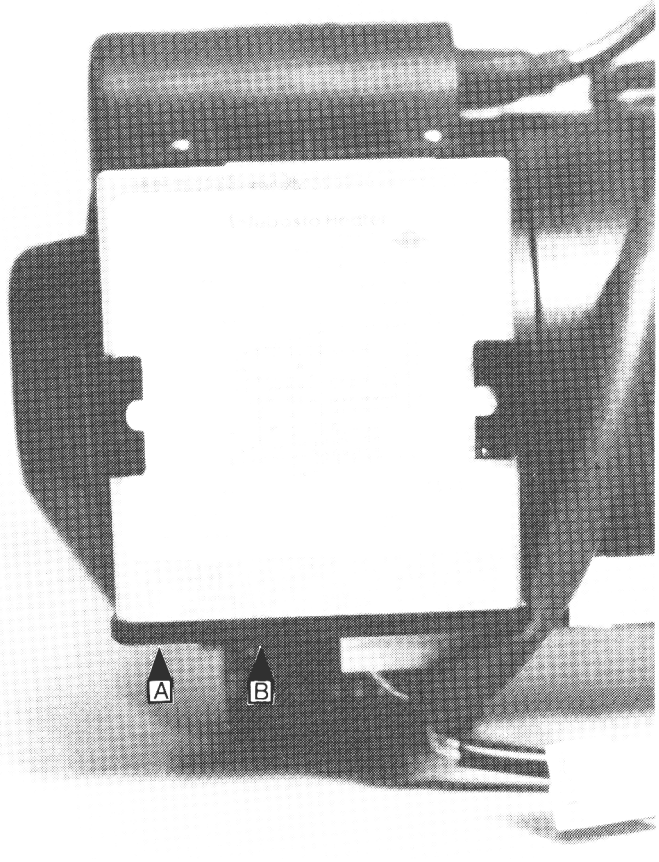

3. Loosen two eye bolt nuts (1), swing out, remove the hinge pin (2) and lift off the burner unit.

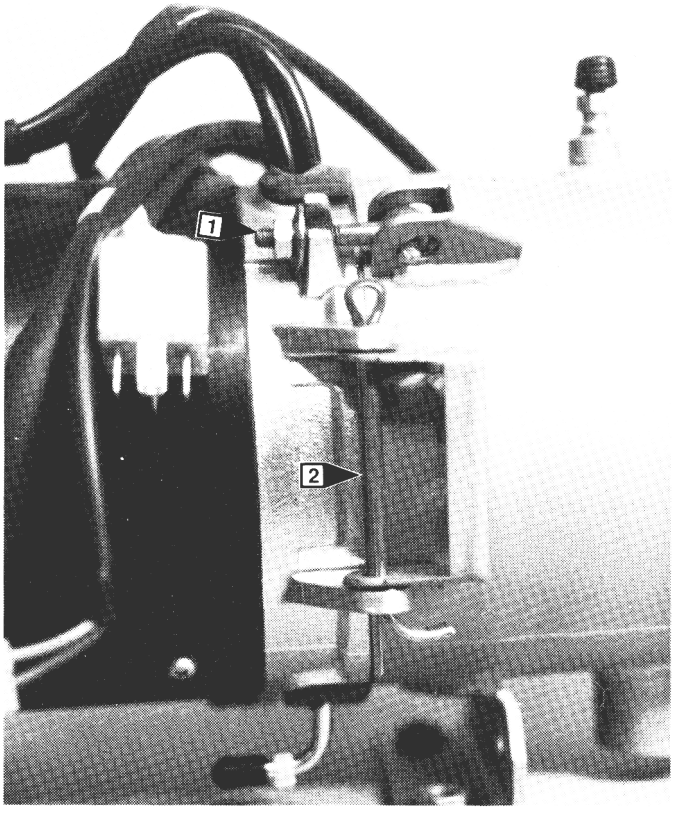

6.4 Installing the burner unit

1. Place burner unit in position and fit the split pin in the hinge.
2. Reposition the eye bolts and tighten.
3. Connect the fuel lines and tighten the clamps. The suction line, which is provided with a filter, must be connected to the pipe marked “S”.
4. Re-fit terminal block, Connect the overheat fuse, control thermostat and temperature limiter (see wiring diagram pages 8 - 10). Tighten screws of clamp and cover,
5. Plug connectors A and B into the control unit and thoroughly seal all around the connectors with a sealing compound,
6. Switch on and check function.

6.5 Replacing the solenoid valve

1. Remove the burner unit according to the instructions on page 18, item 6.3.
2. Disconnect the ignition cables from the electrodes (1) and loosen the retaining clamp bolt (2).

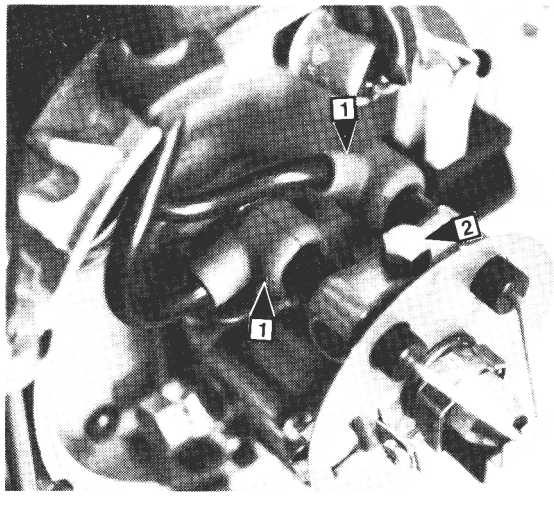

3. Remove the ring (1) holding disc (2).
   Lift and carefully turn the disc (2), so that it releases from the ignition electrodes and nozzle holder. Allow the disc to hang from the electric cables.
4 Disconnect the electric cables and unscrew the lock nut from the solenoid valve (3).

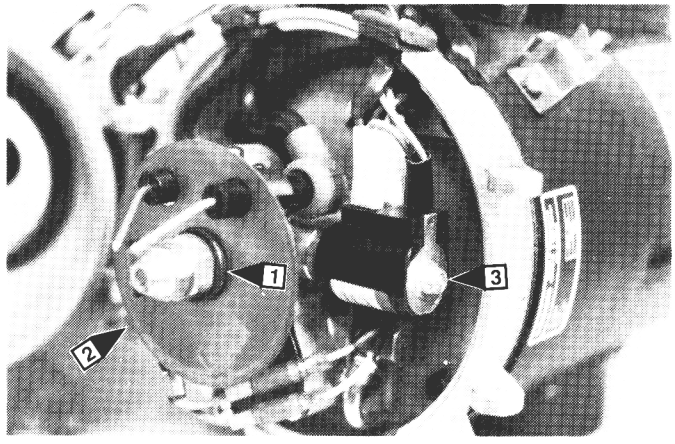

5. Pull out the magnetic head so the valve can be screwed off.
6. Replace the O-ring on the nozzle holder.
7. Unscrew the lock nut from the new valve.
8. Assemble the solenoid valve.

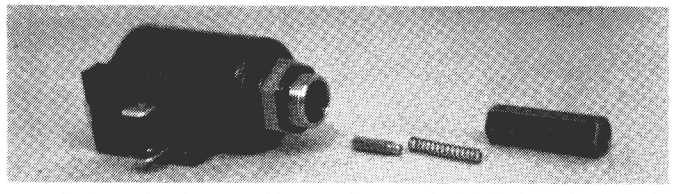

9 Fit the valve into position and screw it tightly into the nozzle holder.
10. Push the magnetic head into position and make sure that the boss registers in the end plate recess. Screw on the lock nut and washer.
11. Connect the electric cables and put the flame control support disc back in its original position.
12 Install ring on the nozzle holder, adjust and tighten the electrodes (see page 21, item 6.9)
13. Install the burner unit in the proper position according to the instructions on page 19, item 6,4).

6.6 Replacing the fuel pump

1. Remove the burner unit according to the instructions on page 18, item 6.3.
2. Disconnect electrical wires for solenoid valve (1), flame detector (2), pre-heater (3), ignition electrodes (4).

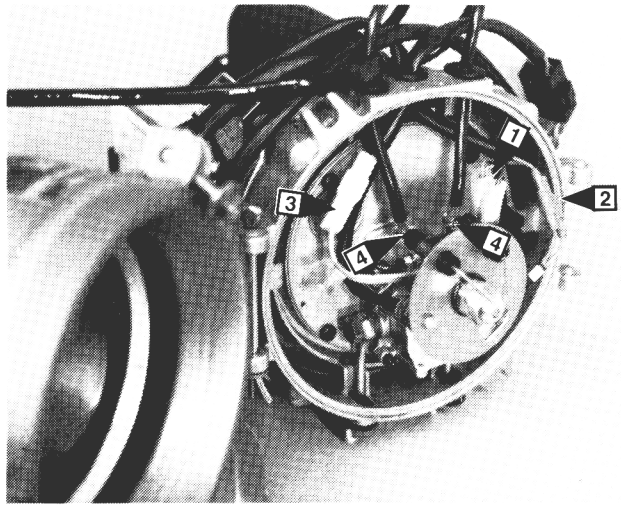

3 . Remove the ring (1), holding disc (2), lift and carefully turn the disc (2), so that it releases from the ignition electrodes and the nozzle holder.

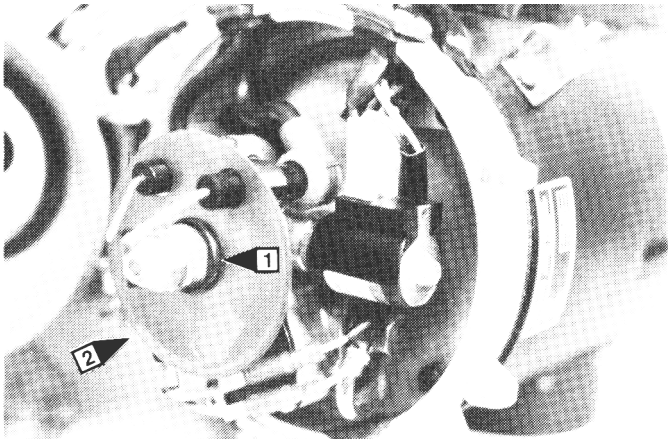

4. Loosen the retaining clamp bolt (1) and dismount ignition electrodes.

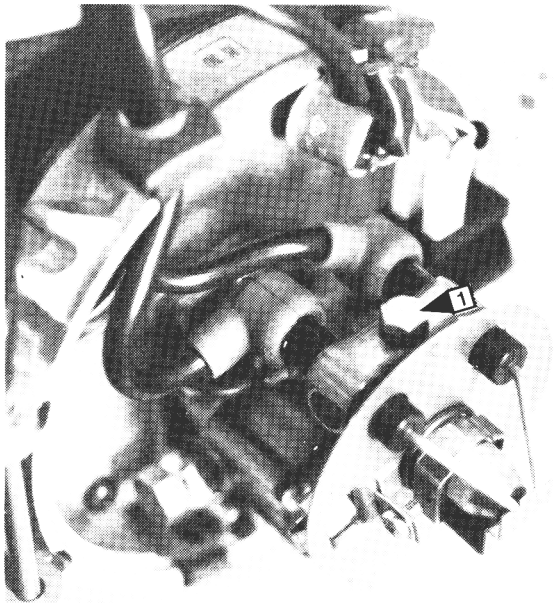

5. Disconnect the return (1) and suction (2) pipes from the fuel pump, Disconnect the delivery pipe (3) from the pump to the nozzle holder. Unscrew the four screws (4) on the back wall and take it out with the nozzle holder and the fuel pump. Remove both bolts (5) which secure the pump.

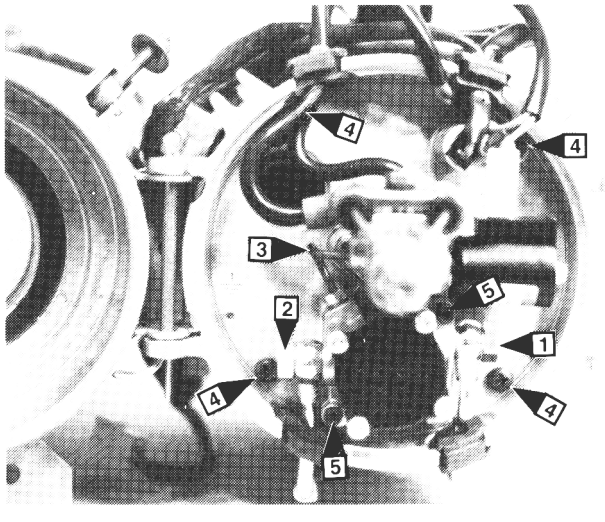

6. Remove the ring from the fuel pump shaft and dismount gear-wheel.
7. Install new fuel pump.
   NOTE: Do not touch the pump regulating screw, The pump has been pre-set to the correct pressure.
8. Screw pump to the back plate, install gear wheel on the fuel pump shaft and fit it in the heater.
9. Connect all fuel pipes and electrical cables.
10. Install disc with flame detector and ignition electrodes. Adjust ignition electrodes (see page 21, item 6.9)
11. Replace the fuel filter on the suction line.
12. Install the burner unit according to the instructions on page 19, item 6.4)

6.7 Replacing the nozzle

1. Loosen the eye bolt nuts (1) to release the eye bolts and swing out the burner unit without stretching the fuel lines and electric cables.

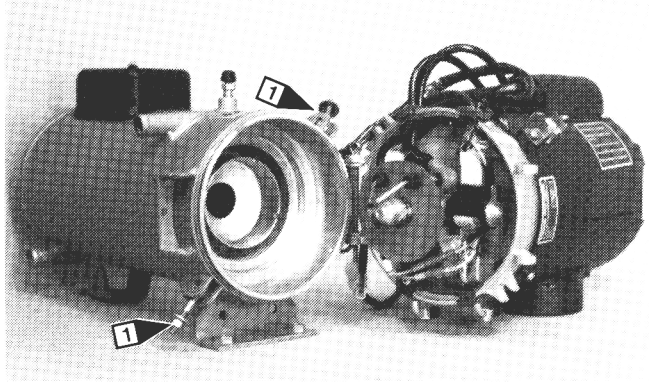

2. Unscrew the nozzle (1), use the nozzle wrench (see page 28, item 7.5) or two wrenches (16 mm and 19 mm). Make sure the ignition electrodes are not moved.

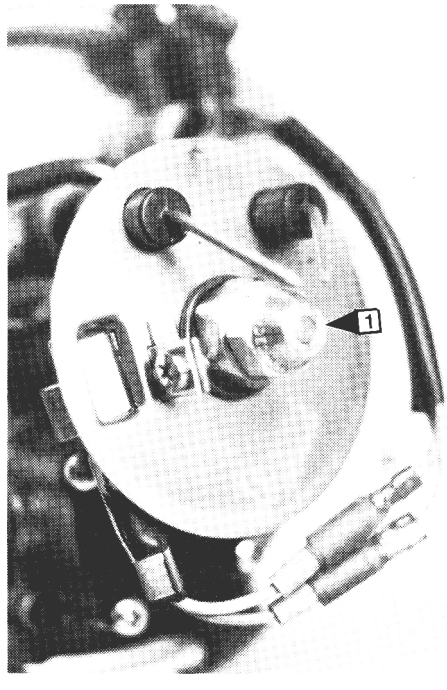

3. Install and tighten the new nozzle. Make sure that the ignition electrodes are not moved; if it is necessary adjust them — see page 21, item 6.9.
4. Swing the unit back into its initial position and tighten the nuts on the eye bolts. Fit new band clamps around the electric cables if the old ones were removed.

6.8 Checking or replacing the flame detector

1. Loosen the nuts on the eye bolts (1) and swing out the burner unit without stretching the fuel lines and electric cables.

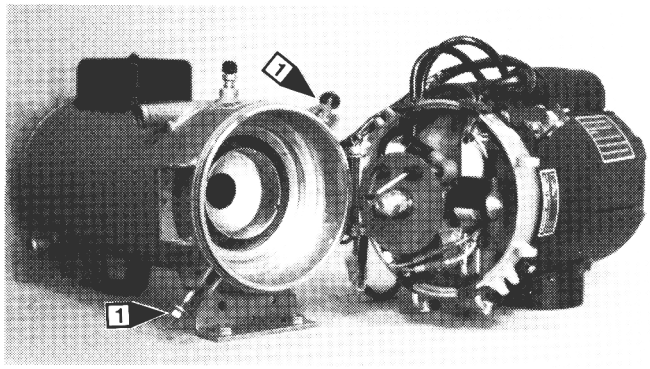

2. Detach the electric cables (1) for the flame control and connect to an ohm-meter. Calibrate the ohm-meter and check the resistance by placing your thumb over and then removing it from the “window” (2). If the flame control is operating properly, the instrument should clearly register resistance.

   High resistance when dark, less than 200 OHM with light on element.

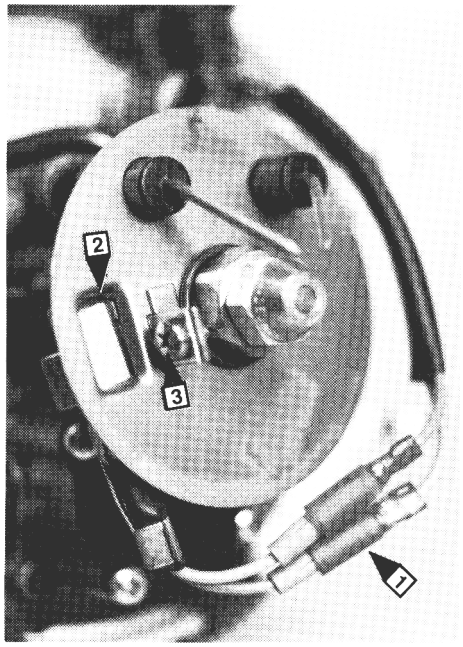

3. To remove the flame detector, unscrew it (3 - above picture) from the support disc.
4. Check the gap between the tips of the electrodes with gauge and adjust if necessary. (See page 21, item 6.9)
5. Swing the combustion unit back into its initial position and tighten up the nuts on the eye bolts.

6.9 Adjusting or replacing the ignition electrodes

1. Loosen the eye bolt nuts(1) to release the eye bolts and swing out the burner unit without stretching the fuel lines and electric cables.

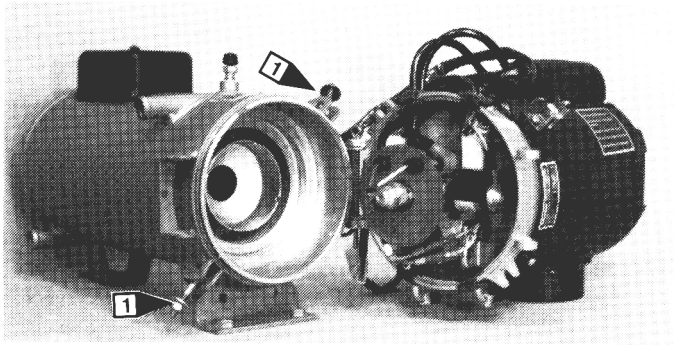

2. Disconnect the ignition cables (1) from the electrodes and loosen the retaining clamp bolt (2).

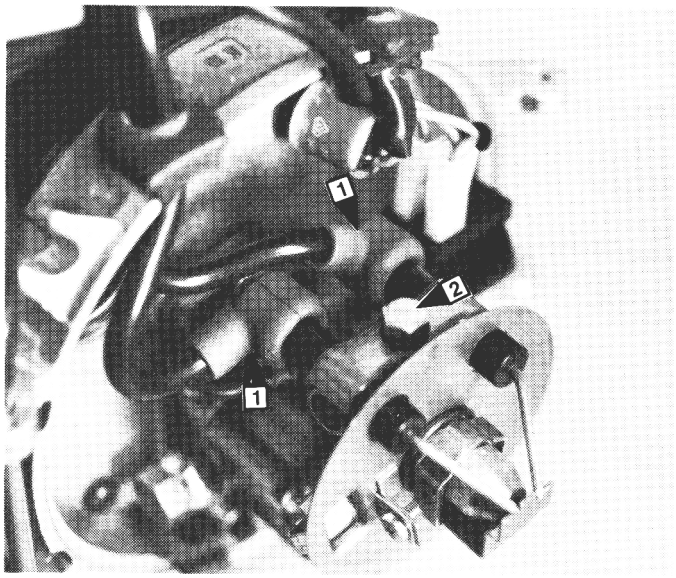

3. Fit the new electrodes into position and connect the electrodes to the ignition cables.
4. Place gauge (1) on nozzle pipe’s hex and insert the electrode tips in the gauge recesses.
5. Tighten the retaining clamp bolt and remove the gauge.

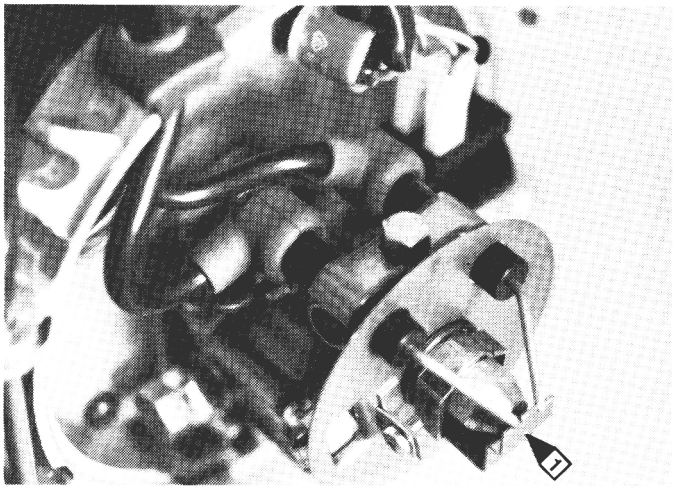

6. Make sure the cables fit neatly in their rubber grommets and the grommets into their niches.
7. Close the burner unit and tighten nuts on the eye bolts. Fit new band clamps to the electric cables if the earlier ones were removed.
8. Switch on and check function.

6.10 Replacing the electric motor

1. Remove the connectors from the control unit.
2. Loosen the eye bolt nuts(1) to release the eye bolts and swing out the combustion unit without stretching the fuel lines and electric cables.
3. Disconnect the ignition cables (2) from the electrodes and unscrew the ignition unit (3).

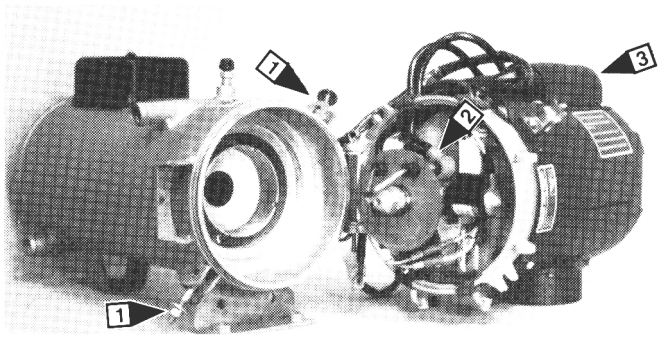

4. Lift up the ignition unit, disconnect wires (1) and unscrew the four screws (2) securing the protection cover (3).

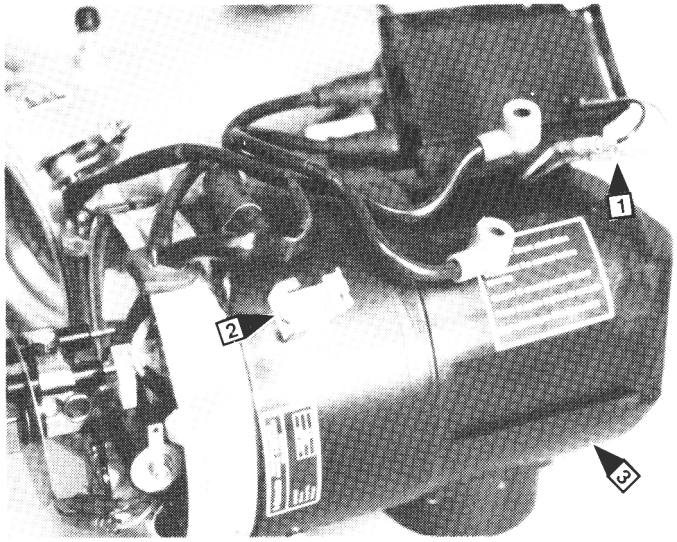

5. Pull off the protection cover far enough in order to disconnect the electric cables from the electric motor. Then move the cover to the one side.
6. Unscrew the mounting flange (1) and electric motor (2).

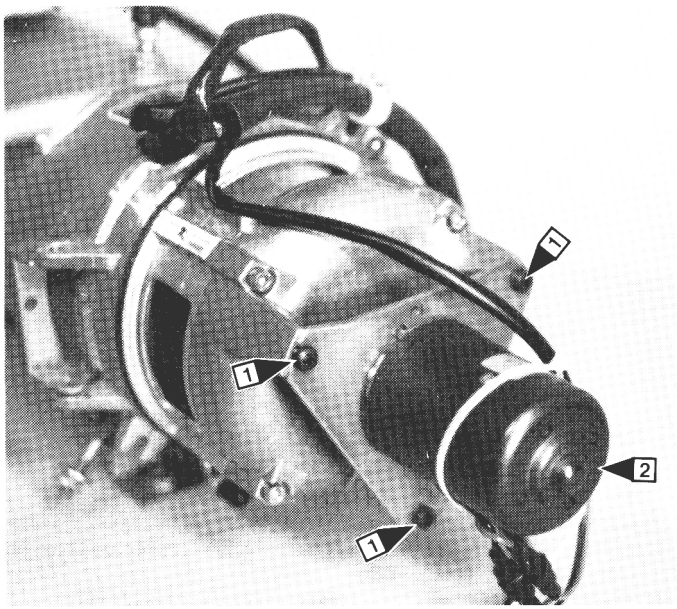

7. Screw the new electric motor to the flange and then to the housing.
8. Connect the electric cables to the motor.
9. Push on the protection cap. Wires to the ignition unit have to go through the hole in the protection cap.
10. Screw on the protection cap, Make sure that the cable harness is placed correctly in the groove in the housing.
11. Connect wires to the ignition unit and screw it on.
12. Tighten the protection cover. Use one of the upper screws to clamp tight the control unit cable harness.
13. Close the burner unit and tighten up the nutson the eye bolts. Fit new band clamps around the electric cables if the old ones were removed.
14. Insert the connectors into the control unit and seal thorouqhly all around the connection with a sealing compound.

6.11 Replacing the ignition unit

NOTE! If the ignition is faulty, check also the flame detector (see page 21, item 6.8)

1. Loosen the eye bolt nuts(1) and release the eye bolts and swing out the burner unit without stretching the fuel lines and electric cables.
2. Disconnect the ignition cable from the electrodes (2) and unscrew the ignition unit's four retaining screws (3).

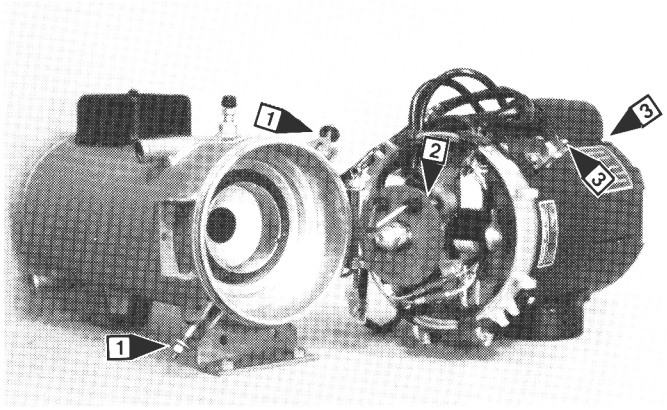

3. Lift up the ignition unit sufficiently in order to disconnect the connectors for the electric cables (l).

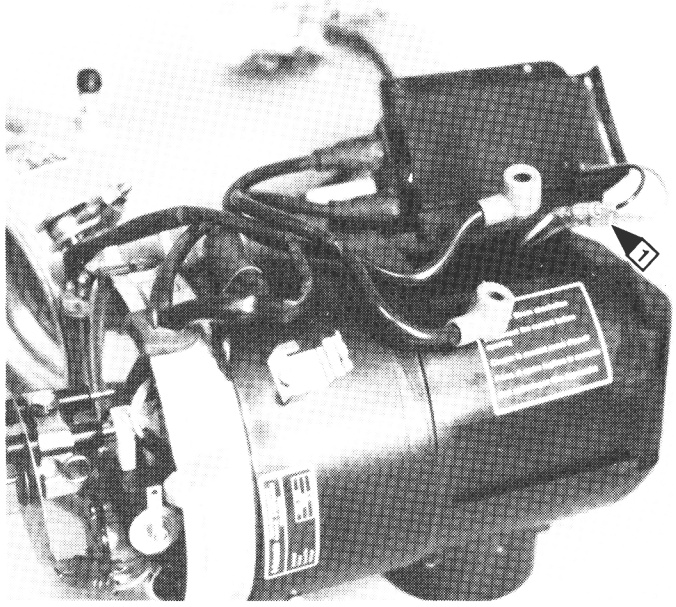

4. Press the connectors for the electric cables (1 upper picture) together.
   Brown — Brown
   Black — Yellow

5. Place the ignition unit in position and make sure that the electric cables are not jammed.
6. Tighten the ignition unit and press the ignition cable securely into the niches to make a secure fit.
7. Check the gap between the tips of the electrodes gauge (1) and adjust if necessary.

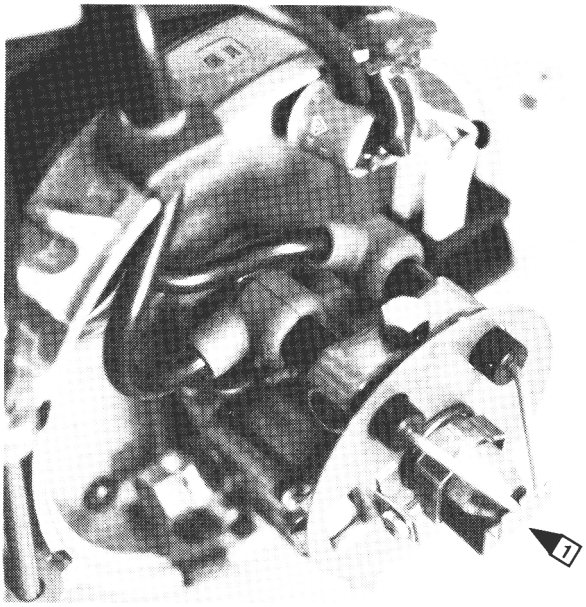

8. Close the burner unit and tighten up the nuts on the eye bolts. Fit new band clamps around the electrical cables if the old ones were removed.
9. Insert the connectors into the control unit and seal thoroughly all around the connection with a sealing compound.
10. Turn on the main switch and check function.

6.12 Replacing or cleaning the combustion chamber

1. Loosen the eye bolt nuts (1) to release the eye bolts and swing out the burner unit without stretching the fuel lines and electric cables.

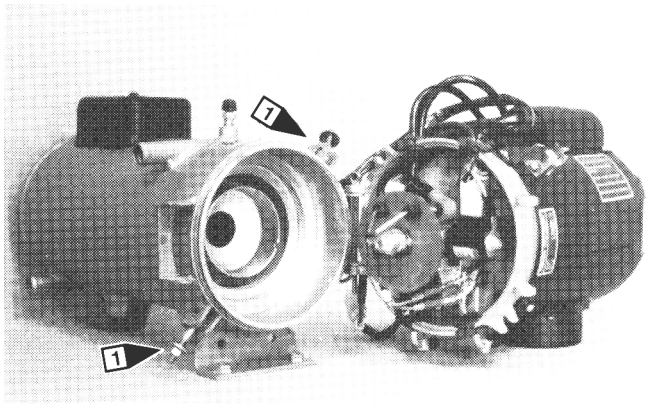

2. Carefully pry loose the combustion chamber from the heat exchanger. Using a screw driver, pry loose all around a little at a time (1).

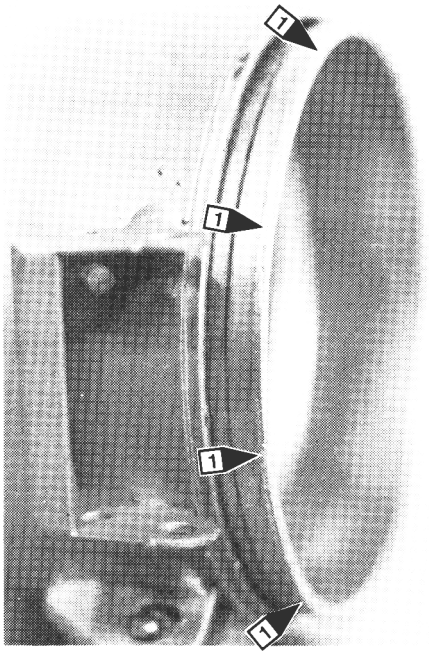

3. Clean the chamber with a brush and also the inside of the heat exchanger from carbon.

NOTE! If there is no even carbon deposit pattern on the sides of the combustion chamber the fuel nozzle may be faulty.
The nozzle hole is made with great precision and the slightest wear can negatively affect the fuel spray. This in turn will result in an asymmetrical combustion flame and poor performance.

4. Push the combustion chamber into the heat exchanger. If it is not possible to push it in all the way, use a plastic mallet and lightly tap all around the edge.
5. Close the burner unit and tighten up the nuts on the eye bolts.
6. Turn on switch and check function.

6.13 Replacing the overheat fuse

First find out the reason why the unit has overheated before fitting a new fuse. A probable cause is air in the coolant system, an inoperative coolant pump or kinks in the hoses.

1. Lift up the protective cap on top of the heat exchanger.
2. Detach the connector from the terminal block (1) and replace the fuse (2) with the help of the P-grip pliers.
3. Re-fit the connector and the protection cap.
4. Switch on and check function.

NOTE! Overheat thermostat is to be connected to #1 and #2 on terminal block.

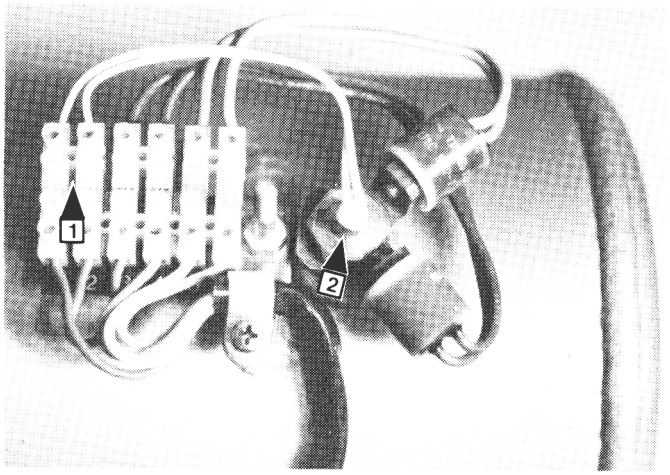

NOTE! The protection cap must be installed, otherwise the thermostats will not function properly.

6.14 Replacing the control thermostat (green and red or white and orange wires).

1. Lift up the protective cap on top of the heat exchanger.
2. Detach the connector (1) at the terminal block and unscrew the thermostat (2).
3. Screw tight the new thermostat to the retainer and re-fit the connector.
4. Fit the protection cap, turn on the main switch and check function.

NOTE! Control thermostat is to be connected to #5 and #6 on terminal block.
The protection cap must be installed, otherwise the thermostats will not function properly.

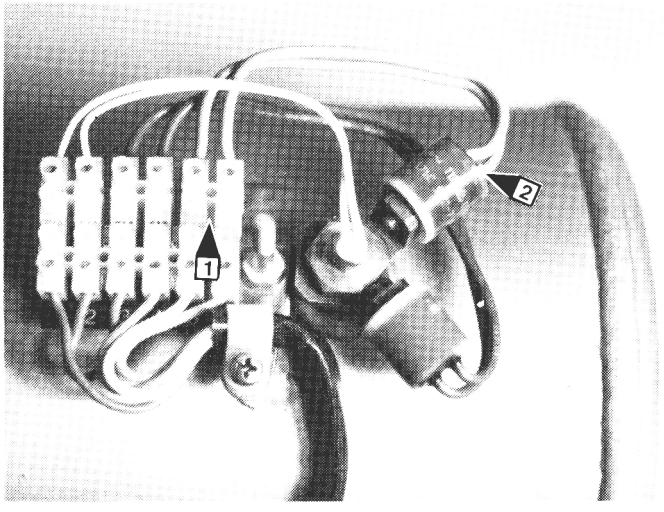

6.15 Replacing the temperature limiter (green wires)

1. Lift up the protective cap on top of the heat exchanger.
2. Detach the connector (1) at the terminal block and unscrew the thermostat (2),.
3. temperature limiter into the copper angle and re-fit the connector.
4. Fit the protection cap, turn on the main switch and check function.

NOTE! Temperature limlier **is** to be connected to #3 and #4 on the terminal block.
The protection cap must be installed, otherwise the thermostats will not function properly.

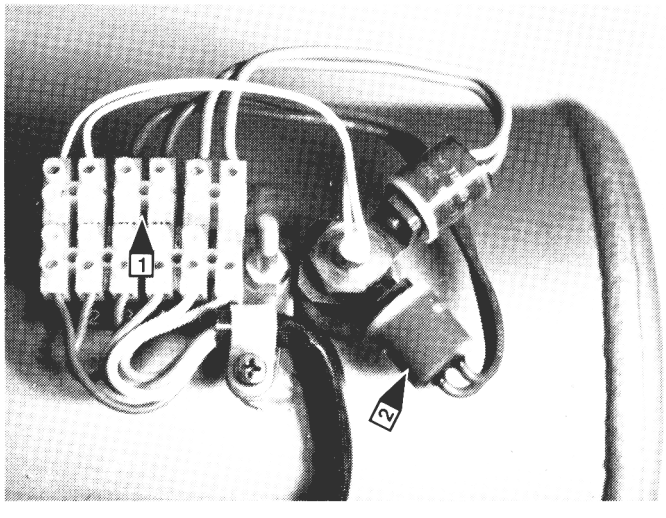

6.16 Replacing the pre-heat thermostat (green and blue wires)

1. Loosen the nuts (1) on the eye bolts and swing out the burner unit without stretching the fuel lines and electric cables.

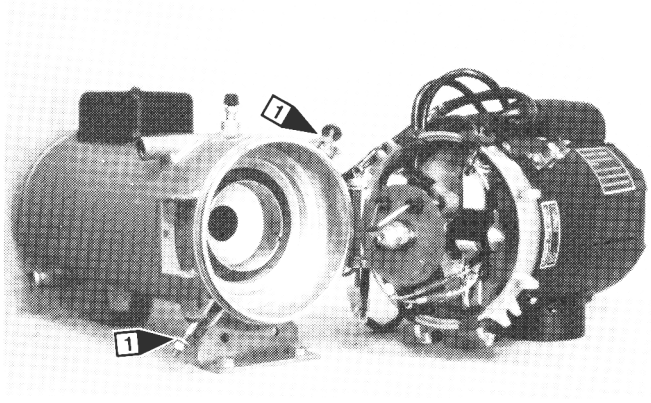

2. Unscrew the pre-heat thermostat (1) and disconnect wires.

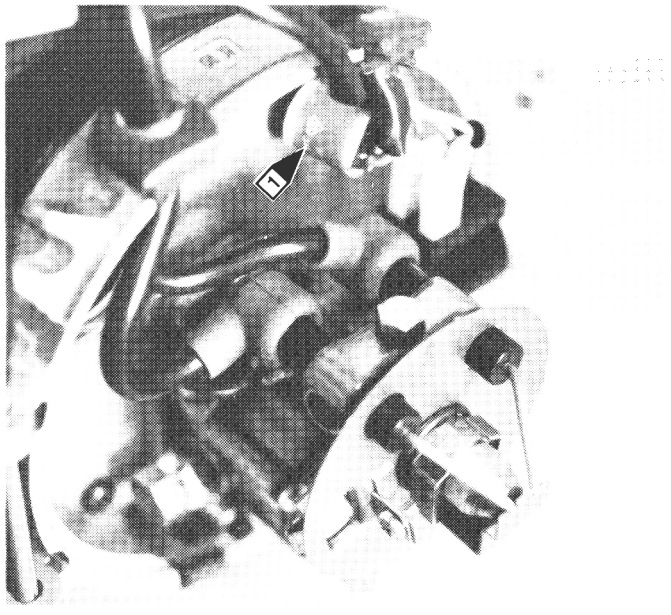

LOCATION OF THE PRE-HEAT THERMOSTAT
FOR DBW 2010 MODEL (1)

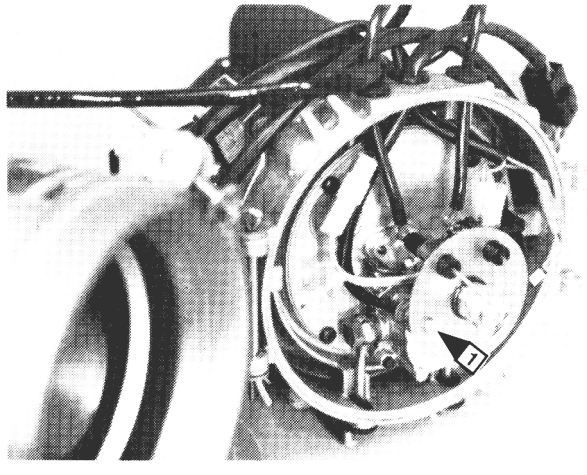

LOCATIONS OF THE PRE-HEAT THERMOSTAT
FOR DBW 2020, DWB 300 AND DBW 350 MODELS (1)

3. Install new thermostat and connect electric wires.
4. Swing the burner back into its inital position and tighten the nuts on the eye bolts.

6.17 Replacing the control unit

Built into the control unit is an under-voltage protection which cuts out when voltage drops to the following:

18.5 ±1 volt for 24 volt System
9.5 ±1 volt for 12 volt System

The low-voltage protection resets automatically when the heater is started with the switch or the timer.

1. Detach the connectors from the control unit and pry the unit loose from the retaining clamp (l).

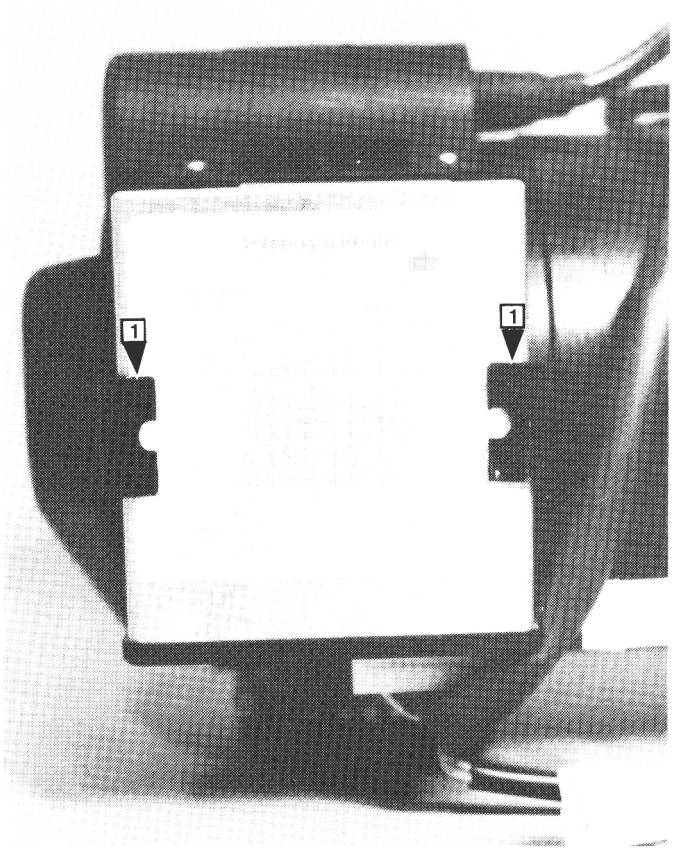

2. Press securely the new control unit into the attachment and re-fit the electrical connections.
3. Seal thoroughly all around the electrical connections with a sealing compound.
4. Switch on and check function.

6.18 Checking and adjusting the fuel pressure

1. Loosen the eye bolt nuts (1) to release the eye bolts and hinge out the combustion unit without stretching the fuel lines and electric cables.

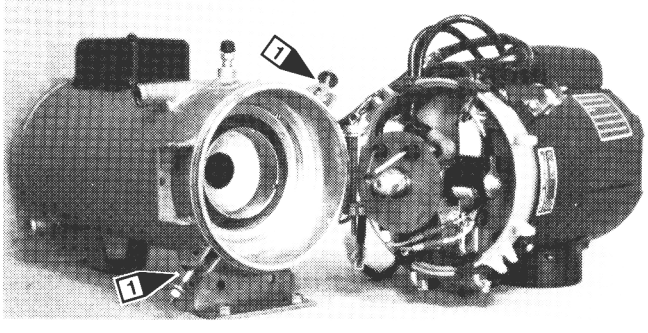

2. Disconnect the ignition cables (1) from the electrodes and unscrew (2) the electrodes.

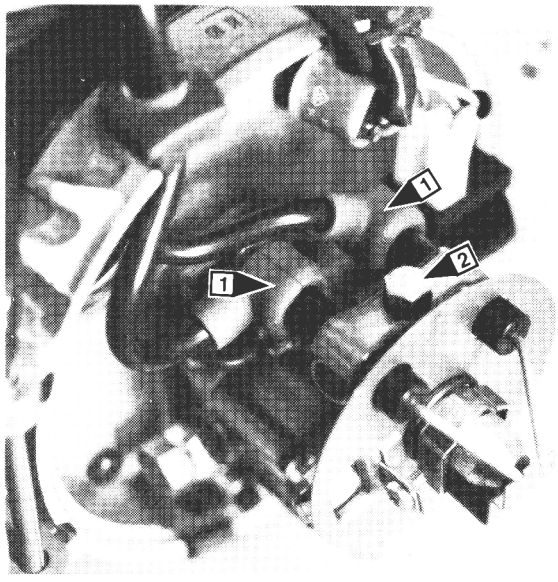

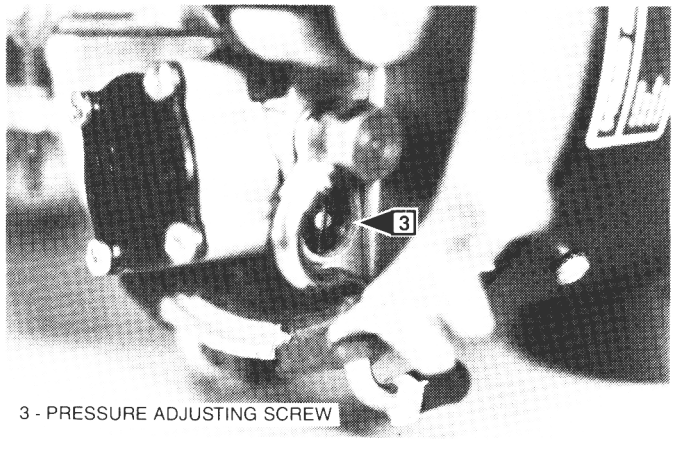

3 - PRESSURE ADJUSTING SCREW

3. Remove the nozzle and fit nipple and pressure gauge.

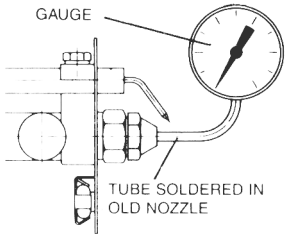

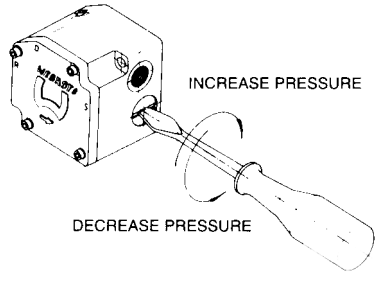

FUEL PRESSURE:	DBW 2010	8 –0,5 bar (16 – 7 psi)
	DBW 2020	10 ~0,5 bar (145 ±7 psij
	DBW 300	10 ~0,5 bar (145 ±7 psi)
	DBW 350	10 ~0,5 bar (145 ±7 psi)

4. Stop the heater and remove the nipple and pressure gauge.
5. Tighten the nozzle.
6. Fit the ignition electrodes, flame control and ignition cables into position and adjust the electrode gap with gauge (see page 21, item 6.9).
7. Close the burner unit and tighten the nuts on the eye bolts. Fit new band clamps around the electric cables if the old ones were removed.
8. Check function.

6.19 Repairing of the coolant circulating pump

Removing

1, Drain the coolant. The coolant hose may have to be pinched with hose pinchers.
2. Detach the connector from the pump electric cables (1).
3. Disconnect the coolant hoses from the pump and unscrew from the bracket.

Disassembling

1. Clean the outside of the pump and secure it in a vice with soft jaws.
2, Unscrew the cover (2) from the body of the pump and remove the O-ring (3).
3. Unscrew the impeller nut (4) and carefully pry loose the impeller (5) with two screwdrivers,
4. Remove the spring seal (7), ceramic (6) and rubber (9) seals. In U481O0move the rubber washer (10).
5. Inspect all parts and replace if necessary. Seals are always replaced.

Assembling

1. Mount all parts in order as shown on page 26 and 27. Silicone seal (6) and spring seal (7) must be fitted in the way shown below. Hard side of the spring seal (1) touches to the ceramic seal (2).

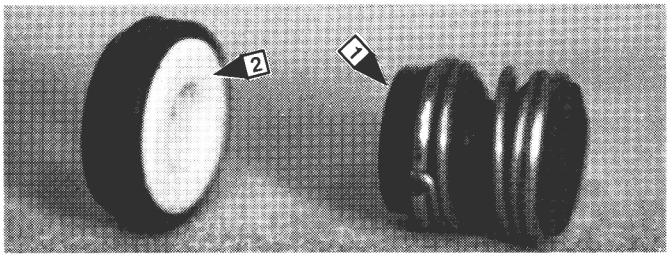

Installing

1. Mount pump.
2. Screw the coolant hoses tight to the pump and remove pinchers if used.
3. Re-fit the connector for the electriccables and seal all around the connection with a sealing compound.

   Match the colours in order to check that the cables are connected correctly; otherwise the pump will rotate in the wrong direction.
   A-1 to brown wire on pump (see wiring diagrams pages 8- 11).
4. Fill the system with the coolant and bleed the heater according to the instructions on page 18, item 6.2.
5. Switch on and check function and for leakage.

IMPORTANT: COOLANT PUMP LEAKAGE

The **U48** series pump uses an internal spring seal which is lubricated by the coolant and, due to the sealing design, there will normally be a certain amount of leakage; however, if the pump is used with coolant that has a high concentration of solids (depends on ratio of mixture), is operated dry (without coolant) or has not been operated at all for several weeks, the seals can be damaged causing excessive leakage. In these cases the pump does not require complete replacement but should have a new seal kit installed.

In addition, if leakage is caused by a cracked or damaged body housing, there is also a housing kit available rather than replacing the complete pump.

The compfete pump should only be replaced if the motor is seized or is not operating properfy.

Important points:
- Ž leaking problem, use seal and/or housing kits as required.
- Ž complete pump only when motor is seized or malfunctioning.
- Ž avoid coolant leakage, use a proper coolant ratio mix, never run the pump dry and use the heater at least once a week all year round.

Circulating pump U4810

1. Plug Connector
2. Screws
3. O-Ring
4. Impeller Nut
5. Impeller
6. Ceramic Seal

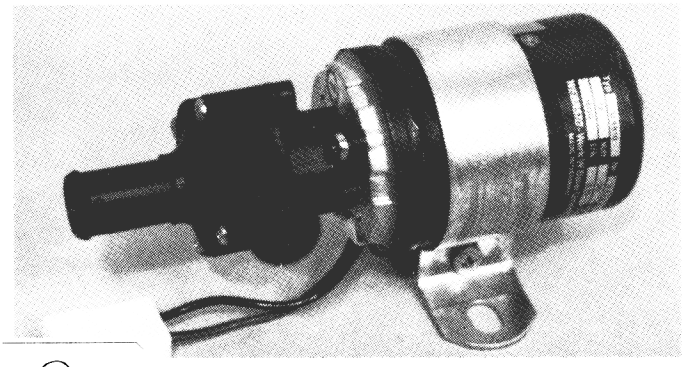

U 4810

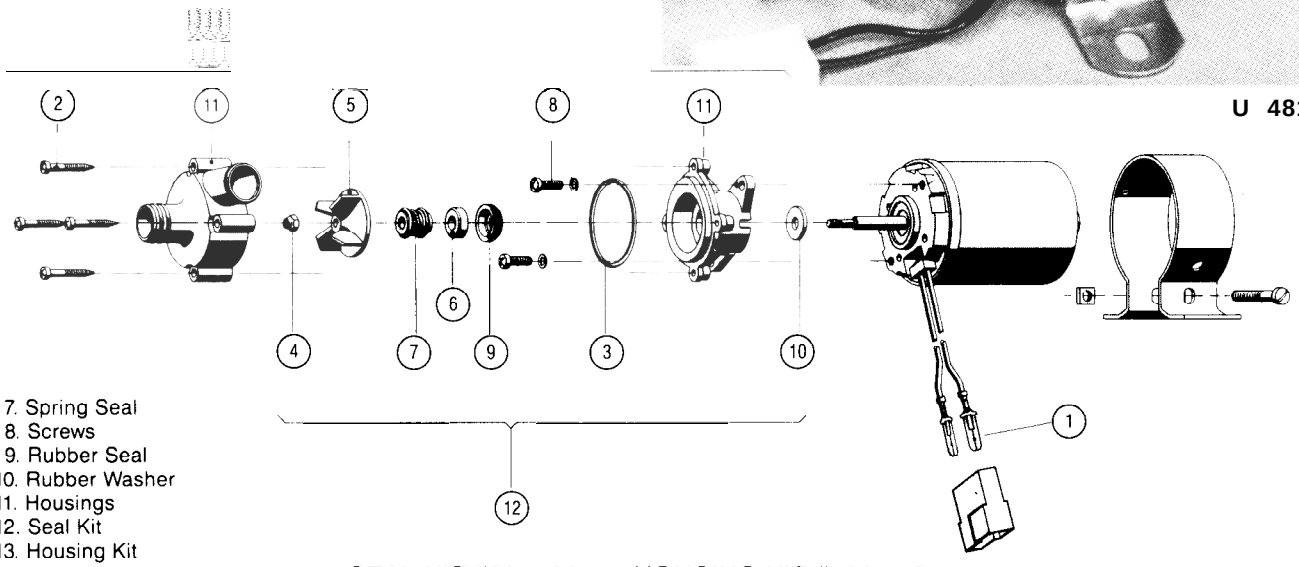

7. Spring Seal
8. Screws
9. Rubber Seal
10. Rubber Washer
11. Housings
12. Seal Kit
13. Housing Kit

SEAL KIT #307-49A HOUSING KIT #400-556

Circulating pump U4814

1. Plug Connector
2. Screws
3. O-Ring
4. Impeller Nut
5. Impeller
6 Ceramic Seal
7. Spring Seal
8. Screws
9. Rubber Seal
10. Washer
11. Housings
12. Seal Kit
13. Seal & Housing Kit

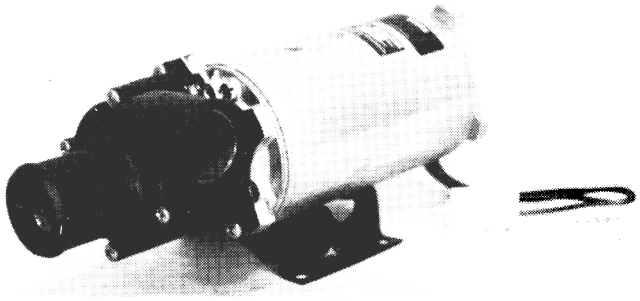

U 4814

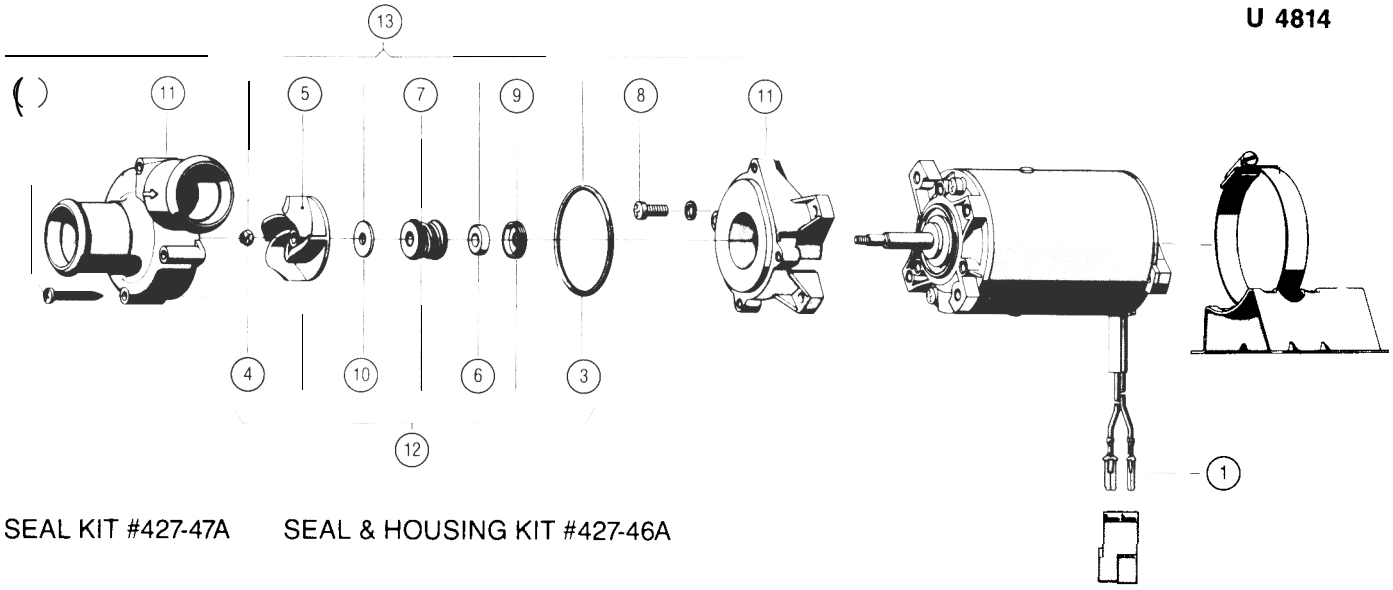

SEAL KIT #427-47A SEAL & HOUSING KIT #427-46A

Circulating pump U4816

1. Plug Connector
2 Screws
3. O-Ring
4. Impeller Nut
5. Impeller
6. Ceramic Seal
7 Spring Seal
8. Screws
9. Rubber Seal
10. Washer
11. Housings
12. Seal Kit
13. Seal & Housing Kit

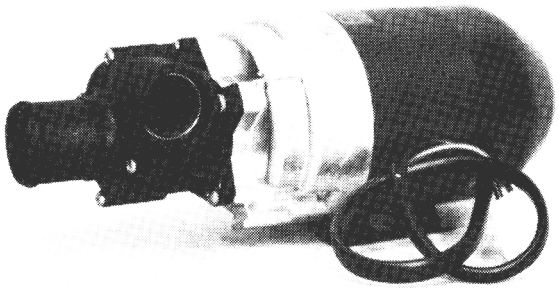

U 4816

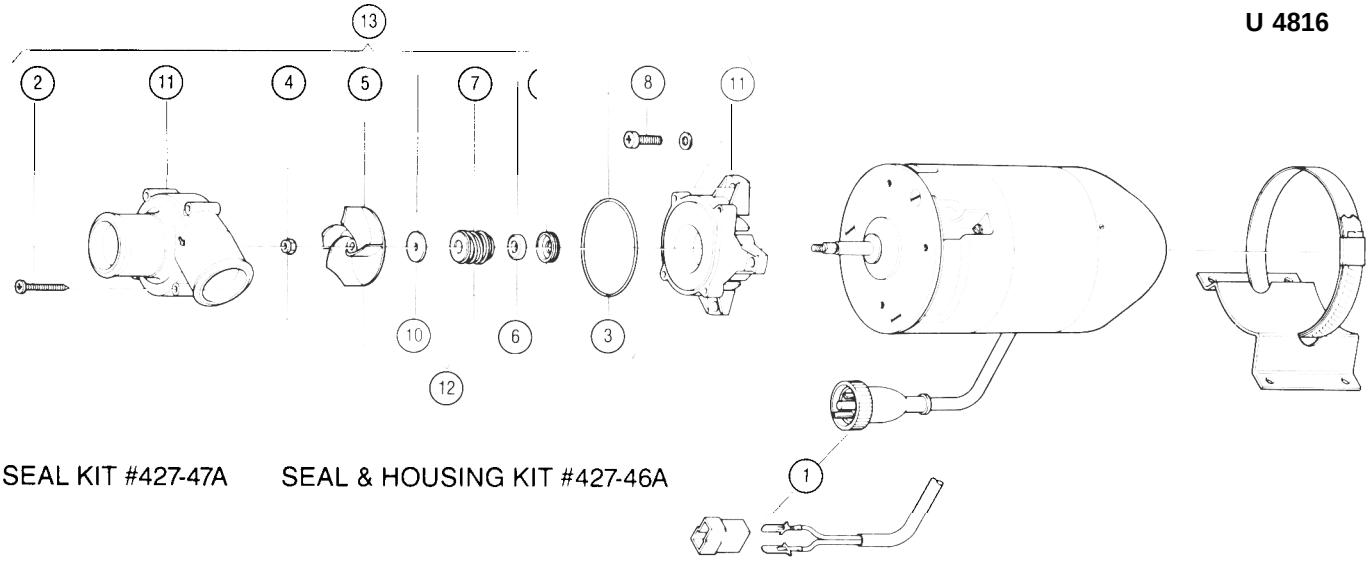

SEAL KIT #427-47A SEAL & HOUSING KIT #427-46A

7. INSTRUMENTS AND TOOLS

7.1 Gauge

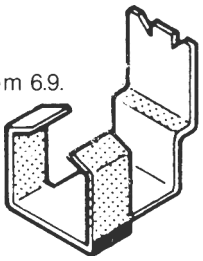

Gauge for regulation of the ignition electrodes on nozzle connections.
Regulation of the ignition electrodes, see item 6.9.
Gauge is mounted on the heater.
Part number: 310.646

7.2 Testing gear

The testing apparatus is suitable fortesting the electronic control unit and the heater.

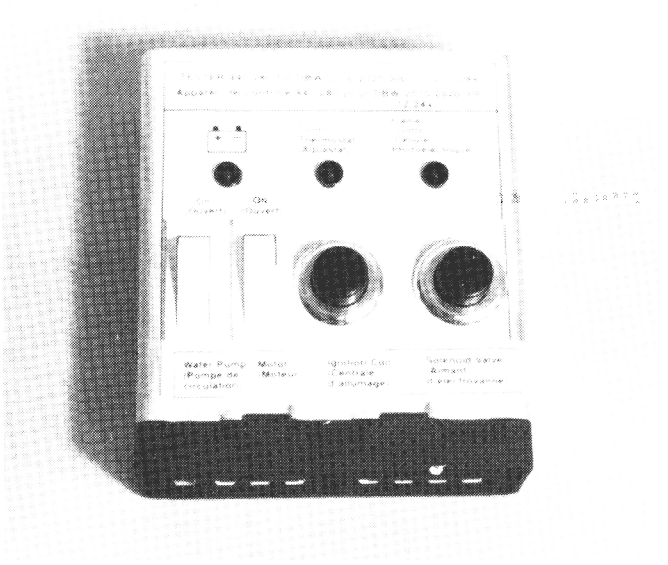

The tester is connected to the heater after taking out the control unit.
Part number: 440.280

7.3 Equipment for checking CO_2

In case of repairs to the burner, irregularities of the combustion or in function tests, the CO_2 in the exhaust should be measured and, if necessary, reset.
Use measuring equipment to check CO_2 in the exhaust gases.



7.4 Equipment for checking 'Smoke Number'

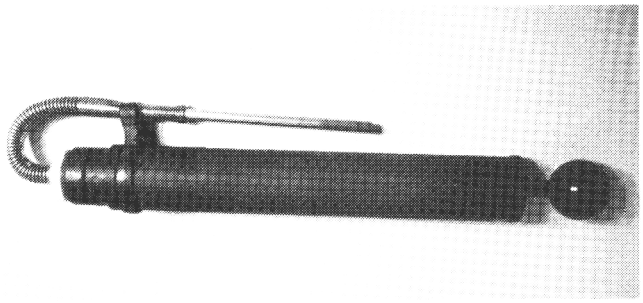

For checking Smoke Number use BRIGON smoke tester.

7.5 Nozzle wrench

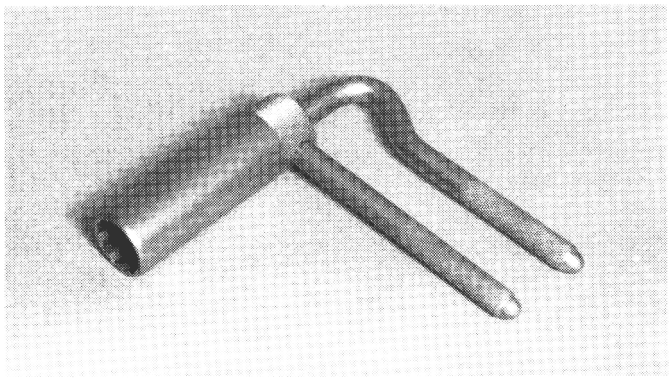

Nozzle wrench to screw the high pressure nozzle out and in
Part number: 243.035

7.6 Fuel pressure gauge

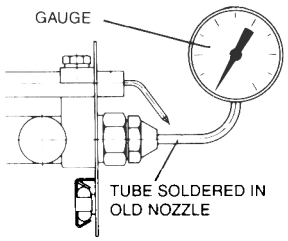

Instead of the fuel nozzle, a used nozzle is screwed in, into which a pipe with connected manometer (indication range 0 ÷12 bar (0 ÷180 psi) is soldered (see item 6.19).
PART NUMBER 600.190

— NOTES –

TERMS OF WARRANTY

COVERING

Webasto DBW-MODEL COOLANT HEATERS AND U48-MODEL COOLANT PUMPS

1. A request may be lodged in accordance with the warranty terms individuaIJy enumerated hereafter onfy if the installation was carried out in conformity with our valid installation instructions and furthermore,in conformity with installation drawings prepared by the purchaser and reviewed by us. The absence of compliance with these provisions precludes all warranty requests.

2. The warranty period 12/24 months (as noted below) is effective from the installation date or in the case of OEM installation the registration date of the vehicle. In any event the warranty period may not exceed 24 or 36 months (as noted below) from the original date of delivery by Webasto.

équipement	warranty period	Not to exceed from delivery date
DBW Coolant Heaters (DBW 2010, 2020 & 300 only)	24 months	36 months
Coolant Pumps		
U 4810	24 months	36 months
U 4814 / U 4816	12 months	24 months

3. Within the said period, we warrant the equipment against perceptible and hidden defects and against the absence of covenanted properties or characteristics, and we so warrant it exclusively in such reamer that we, at our own discretion, either repair or replace in our plant those parts of the equipment delivered which demonstrably, despite proper utilization and compliance with the pertinent and valid installation and operating instructions, became unserviceable or suffered sigtilcantly impaired serviceability as a result of circumstances predating the passing and assumption of risk, be it due to defective materials or workmanship. **The parts replaced become our property and must be returned to our plant prepaid. AU other requests are specifically excluded from the warranty and the purchaser acknowledges that the warranty shall only pertain to the work set out above. Without limiting the generality of the exclusion, it is hereby understood and agreed that reimbursement of expenses incurred in connection with repair work, travel expenses, dismantling and reassembly of the equipment delivered and other requests for damages of all kind under whatever legal title, for personal injury or for damage to objects not forming part of our delivery, are specifically excluded in law.** Changes in construction or execution generally effected by us before delivering an order or a piece of equipment shall not entitle the purchaser to formulate a request.

4. Where a warranty request has been approved, the lowest return shipping charges will be borne by us within Canada.

5. Where the warranty terms have been fulfilled (par. 1-4), all requests for reduction of purchase price or rehibition are hereby precluded.

6. Our warranty becomes null and void where the goods delivered have been modified by others or by the installation of parts of foreign origin without our consent. **The warranty also becomes null and void where our valid installation and operating instructions have not been observed.** A warranty request which may be justified as such becomes null and void if our ability to repair the object of the request has been impaired by treating it improperly or othemvise modifying it, e.g. by removing parts thereof.

7. The following are not covered by warranty: fuel nozzles, fuel falters, temperature fuses, fuses, carbon brushes, wiring harnesses, corrosion, natural wear and tear, and damage caused by improper treatment. We shall, in particular, not be liable for changes in the condition or the operating characteristics of the goods delivered by us where such changes are caused by improper storage or by climatic or other influences. The warranty shall not cover defects attributed to faulty design or choice of unsuitable materials where the customer has demanded such construction or material despite prior warning.

8. All provisions and clauses which are not in accordance with our terms of warranty or with our general conditions of sale and delivery, be they made by whoever, whenever, and in whatever form, are null and void, and we are not obligated to specillcally disclaim them. The acceptance and fulfilment of an order containing other conditions and clauses shall not change, broaden or restrict our liability nor our other obligations in any way.

9. We decline every responsibility arising out of difficulties encountered upon re-selling or utilizing our products or merchandise sold by us abroad, as a result of regulations protecting industrial property

10. Warranty requests can only be taken into consideration if made in writing immediately upon discovering the defect, and such requests must include the product serial number and date of installation. In requesting warranty, the rectification of the defect without charge must be specifically demanded. The repair or replacement shall not extend nor renew the warranty term.

11. It is a pre-condition for every warranty request lodged in accordance with the above provisions that the warranty card has been completed by the installer and returned to us with the parts objected to. In addition, the duplicate of the warranty card (control card) must have been returned to us immediately after installing the equipment. We are, at our own discretion and without prejudice to our terms or warranty and without admitting any liability, prepared to bear the cost of installation and dismantling within the framework of our Official Warranty Time List. It shall be a condition for accepting the cost of installation and dismantling labour that the work is earned out by us or by a service facility duly authorized by us,

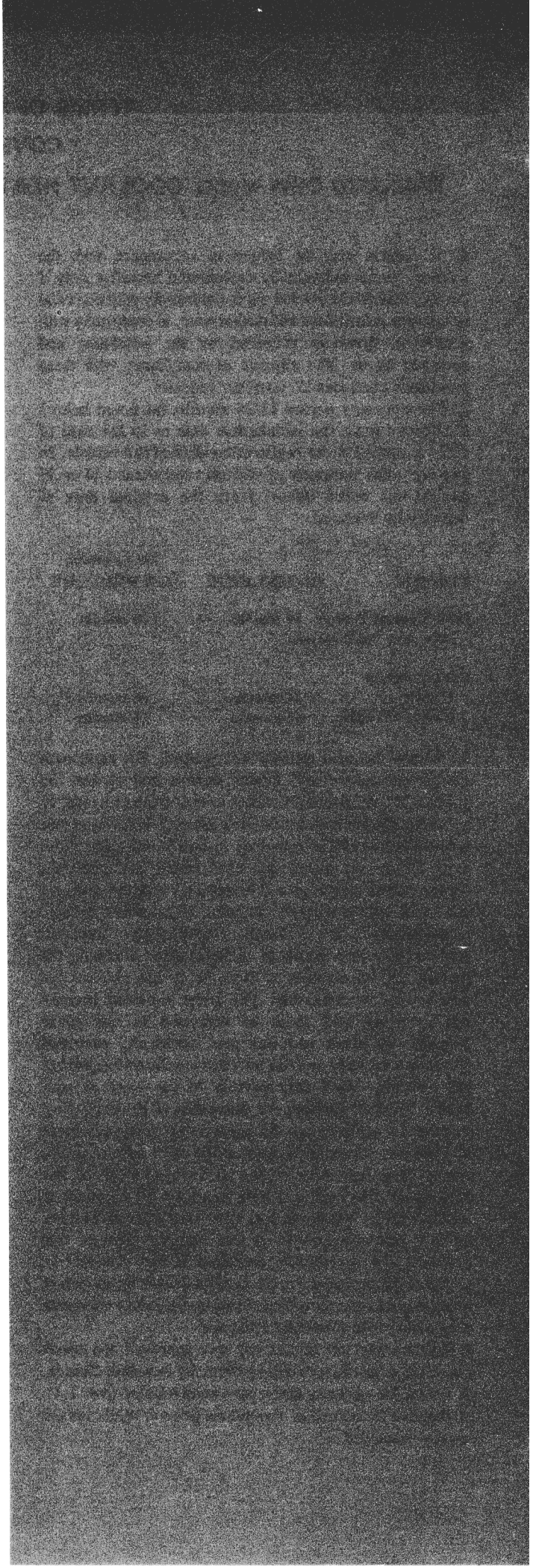

Webasto

CANADA:

Webasto Thermosystems (Canada) Ltd.
4450 Mainway,
Burlington, Ontario L7L 5Y5
Telephone: (905) 335-4143
Fax: (905) 335-6958

U. S. A.:

Webasto Thermosystems Inc.
1598 East Lincoln,
Madison Heights, Michigan
48071
Telephone: (810) 545-8770
Fax: (810) 545-8773

PART NO. 699.745 NOV 94 *Subject to modification.*

Espar

D12W

UNIVERSAL AND BOXED VERSIONS

INSTALLATION
TROUBLESHOOTING
& SPARE PARTS

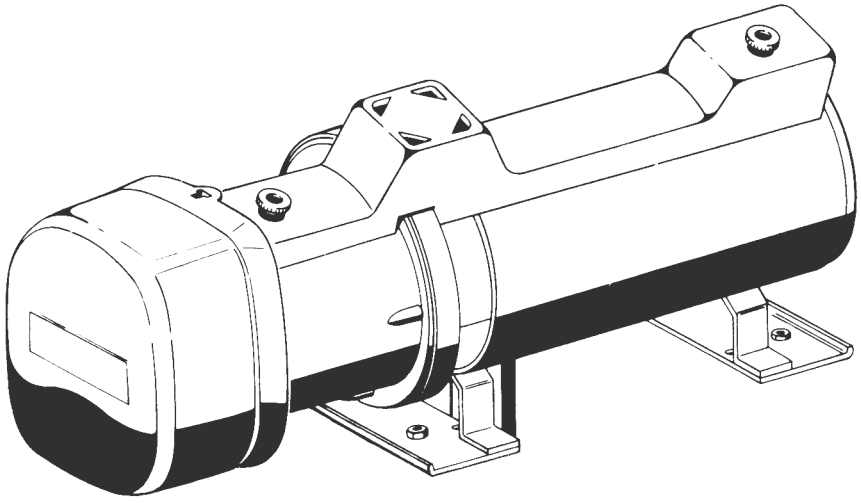

NOVEMBER 1993

ESPAR D12W COOLANT HEATER

The ESPAR D12W is a diesel-fired 14,000 BTU/hr coolant heater, quality engineered to provide a dependable means of preheating, maintaining heat or providing supplemental heat to water cooled engines and heating systems. For ease of installation, the D12W is available in a universal version or in a weather resistant steel box for applications where adequate protection is not available.

The heater is connected in the coolant system of the vehicle engine and pumps coolant from the engine, heats it and returns it to the engine. By routing the hot coolant through vehicle heat exchangers it is also possible to heat the interior of the vehicle. Since the heater runs on diesel fuel and 12 or 24 volt power, it is able to perform this completely independent of the vehicle engine. A temperature regulating switch in the unit regulates the coolant temperature between a low of **155°F (68°C)** and a high of **176°F (80°C)** by automatically cycling the heater off and on as required.

Note: There are two (2) temperature regulating switches available for the D12W. One is the standard switch that comes with the heater (155°F [68°C] / 176° F [80°C]) and should be used for preheating applications only. If using the heater for preheat **and** supplemental heat (eg. school buses), the hot switch should be used. This switch lets the water heat up to approx 194° F (90°C) before shutting the heater off. Check the parts list for the correct part number for the switch you require.

The D12W can be operated from the vehicle cab by an on/off switch or preselect timer or a combination of both.

Temperature regulating and overheat shut down switches are among the safety features which make the D12W a safe and dependable heating system.

GENERAL SPECIFICATIONS

Heat Output (± 10%) 41,000 BTU/hr

Current Draw (± 10%)	**TYPE**	**START**	**RUNNING**
Standard Pump	12V	17.1 Amps	7.1 Amps
	24V	13.5 Amps	3.5 Amps
High Capacity Pump	12V	23.1 Amps	13.1 Amps
	24V	16.6 Amps	6.6 Amps

Fuel Consumption (±10%)
0.44 US Gal/hr
0.36 Imp Gal/hr
1.65 Litre/hr

Coolant Pump Flow (± 5%) at 200 m Bar head pressure	**Standard**	**High Capacity**
	475 US Gal/hr	690 US Gal/hr
	396 Imp Gal/hr	552 Imp Gal/hr
	1800 Litre/hr	2600 Litre/hr

Operating Voltage Range
* 10.5 to 14.0 vdc at 12 vdc
* 21.0 to 28.0 vdc at 24 vdc

*The heater control unit is equipped with a low voltage cutout at 10.5V or 21.0V. The unit will automatically shut down at the low voltage level to protect the heater.

NOTE: The coolant pump will not shut down at low voltage levels.

Coolant Temperature Range (± 5%)

Standard Switch
At 155°F heater switches on (68°C)
At 176°F heater switches off (80°C)

Hotter Switch
At 178°F heater switches on (81°C)
At 194°F heater switches off (90°C)

Overheat Temperature Shutdown (± 5%) 235°F (115°C)

Controls: On/Off switch or optional 99 hour countdown timer.

D12W HEATER OVERVIEW

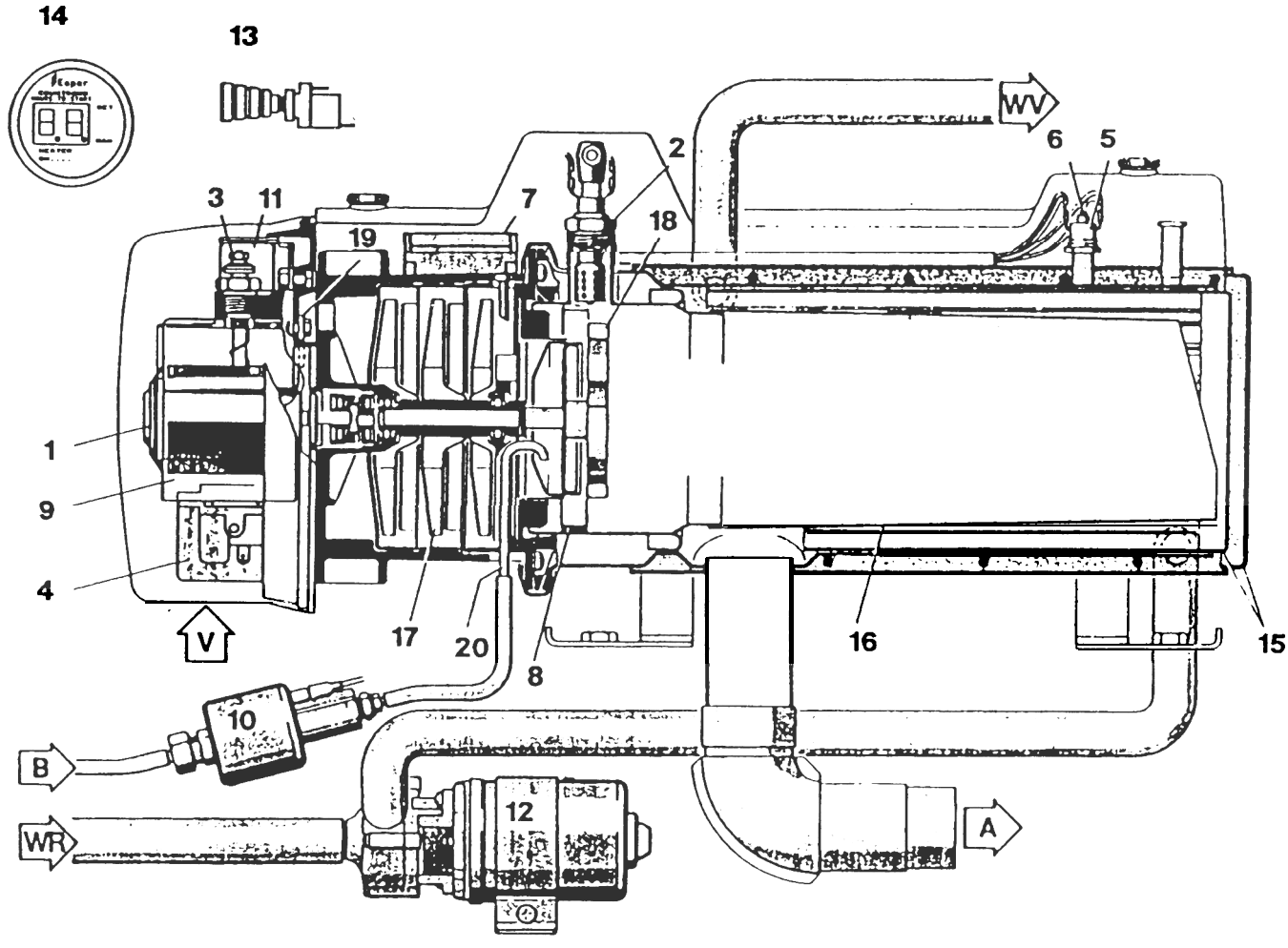

1. Combustion Motor
2. Glow Plug
3. Series Resistor for Glow Plug
4. Ignition Spark Generator
5. Temperature Regulating Switch
6. Overheat Cutout Switch
7. Flame Sensor
8. Wick Ring
9. Control Unit
10. Fuel Metering Pump
11. Coolant Pump Relay
12. Coolant Pump
13. Push/Pull Switch
14. 99 Hour Timer
15. Heat Exchanger
16. Flame Pipe
17. Combustion Air Blower
18. Atomizer
19. Air Valve
20. Fuel Pipe

A = Exhaust Outlet
B = Fuel in
v = Combustion Air
WR = Coolant in

INSTALLATION PROCEDURES

WARNING

1. Correct installation of this heater is necessary for proper operation. Read and understand the installation manual enclosed before you attempt to install.
2. Do not install heater in passenger compartment.
3. Do not install in enclosed areas where combustible fumes can be present. Do not install heaters in engine compartments of gasoline powered boats.
4. The heater exhaust is hot. Keep a minimum of 2“ clearance from any heat sensitive material.
5. Install heater exhaust so that papers, rags, etc., cannot come in contact with it.
6. Route heater exhaust so that exhaust fumes cannot enter the passenger compartment.
7. Heater must be turned off when vehicle or boat is being refueled.
8. Double check all fuel and exhaust connections for leaks after installation.
9. For any questions or the name of your nearest authorized Espar representative. call:

U.S. 800-387-4800 Canada 800-668-5676

WARNING

Safety Hazard on Coolant Heaters Used With Improper Antifreeze Mixtures

The use of ESPAR coolant heaters requires that the coolant in the system to be heated contain a proper mixture of water and antifreeze to prevent coolant from freezing or slushing.

If the coolant becomes slushy or frozen, the heater’s coolant pump cannot move the coolant causing a blockage of the circulating system. Once this occurs, pressure will build-up rapidly in the heater and the coolant hose will either burst or blow off at the connection point to the heater.

This situation could cause engine damage and/or personal injury. Great care should be taken to ensure a proper mixture of water and anitfreeze is used in the coolant system.

Please refer to engine manufacturer’s or coolant manufacturer’s recommendations for your specific requirements.

1. Heater Location

Depending on the type of vehicle, the best location for mounting the heater will vary greatly. If the heater can be mounted in aprotected area (eg: storage compartment, step box, engine compartment, etc.), the universal type can be used. However, if this is not possible the boxed version must beused.

Basically the heater may be mounted anywhere on the vehicle with the following conditions:

A. Locate the heater below the normal coolant level of the engine.

B. Locate heater where road sprayer debris cannot damage it.

C. **DO N0T** mount heater inside the vehicle passenger area.

When selecting the Location, consider the following:

A. EngineCoolant Hose Connections

B. Heat Exchanger Connections (if applicable)

C. Fuel Line Connections

D. Electrical Connections

In all cases, “the closer, the better.”

2. Heater Mounting

2 A. Universal Type

The heater is mounted using four (4) rubber shock mounts between heater and mounting surface. Hole pattern for mounting universal type is shown in Figure 2A.

NOTE: For severe vibration applications, heavier mounts may be required.

Figure 2A: Universal Type Heater Mounting

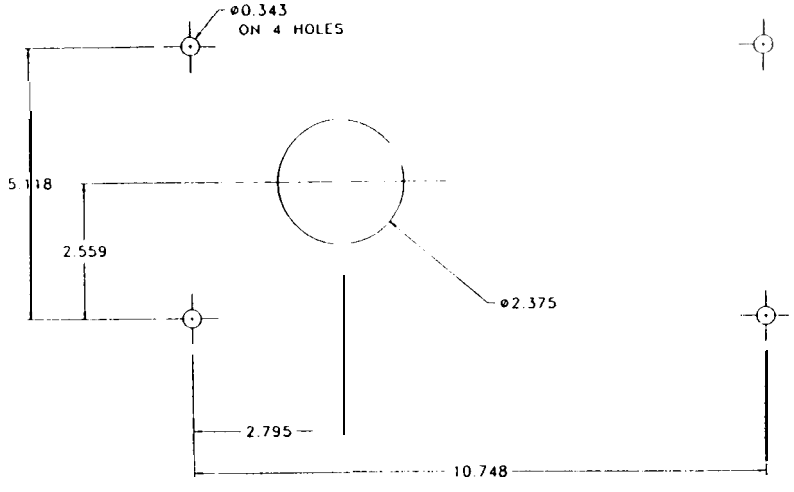

2 B. Boxed Type

The heater is mounted in a steel box with four (4) rubber shock mounts. These mounts are used between the heater and the box. The overall box dimensions are shown in Figure 2 B below

Figure 2B Boxed Type Heater Mounting

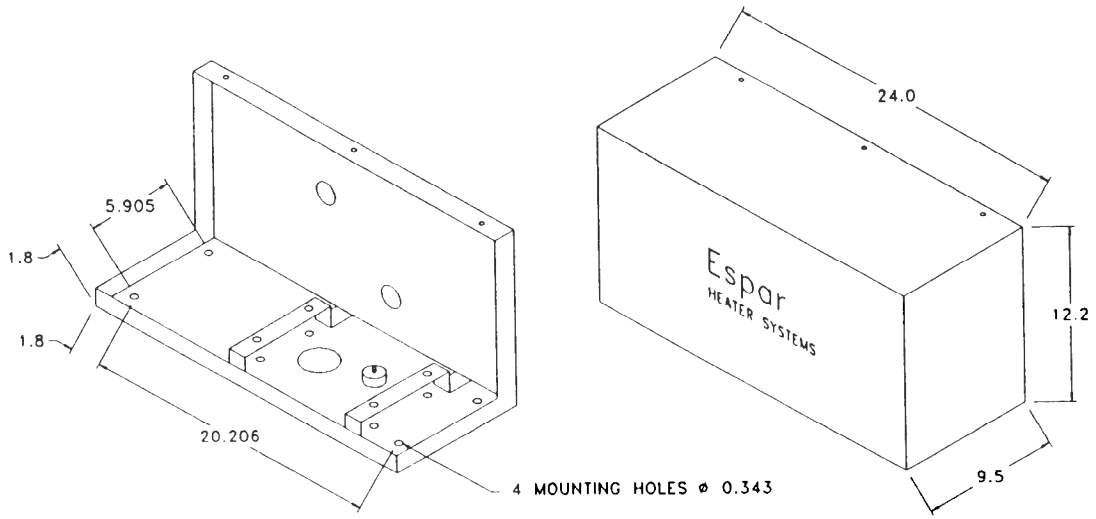

3. Coolant Hose Connections

To provide fast and efficient heating of a coolant system, heated coolant should enter the front and circulate to the rear of the engine where it should be drawn off (as shown in Figure 3). It is necessary to install the heater to provide coolant flow in the same direction as the flow within the engine so that when the heater is operated **with the engine running** there is no opposing flow. If this flow is not possible then the heater must not be used while the engine is running.

If heat exchangers are being used, they should be connected in the coolant line from the heater to the engine.

There are two methods of connecting to the coolant system:

A. Install hose fitting in existing holes in the engine block (these will have blanking plugs in them).

or

B. Install “T” piece connectors in existing coolant hoses.

Whichever method is used, remember to draw coolant from the engine to the heater from the furthest rear point (bottom, left or right) of block and return coolant from heater (or heat exchangers if applicable) to the engine at a forward block connection (suction side of engine water pump is ideal).

TYPICAL COOLANT HEATER FLOW DIAGRAM

Figure 3 A: Installation in the coolant circulating system with heat exchangers

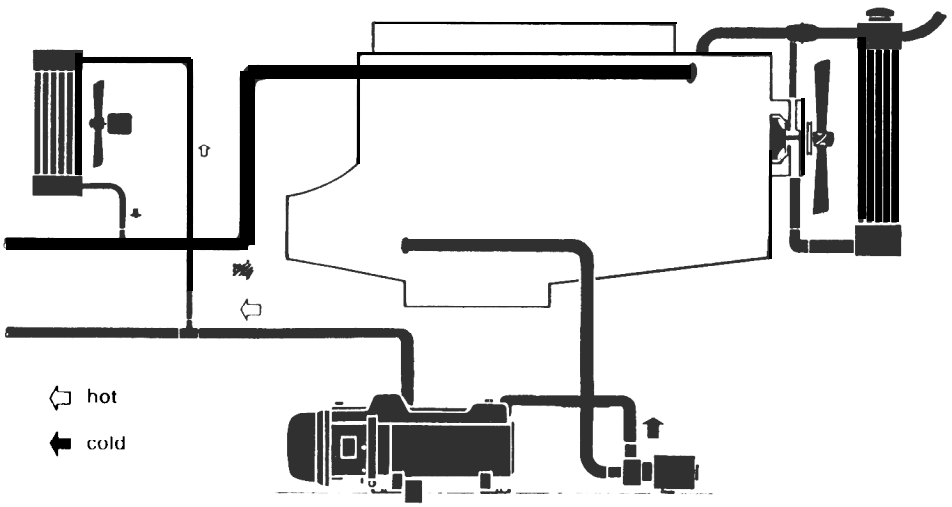

Figure 3 B: Installation in the coolant circulating system without heat exchangers

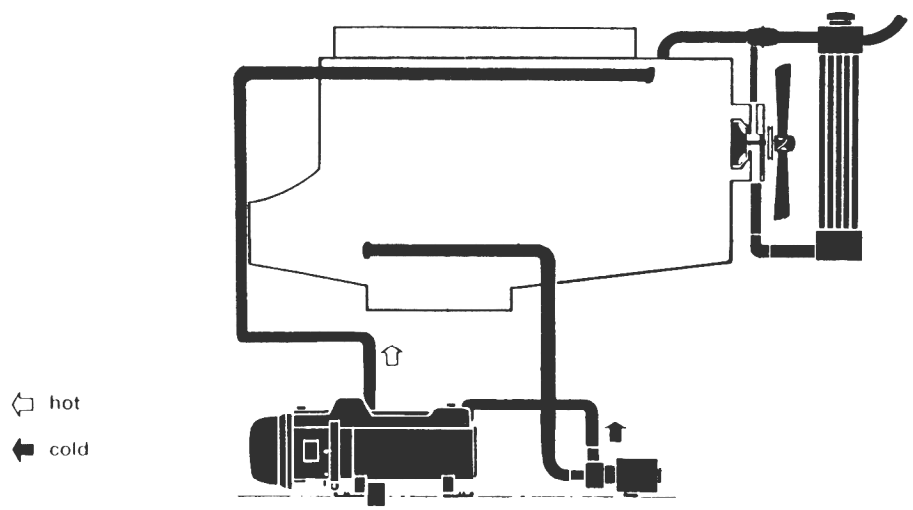

4. Fuel System

The fuel metering pump is the heart of the system and must be installed properly to insure successful heater operation,

All parts necessary are included in the installation kit or can be purchassed separately.

Figure 4: Fuel System Overview

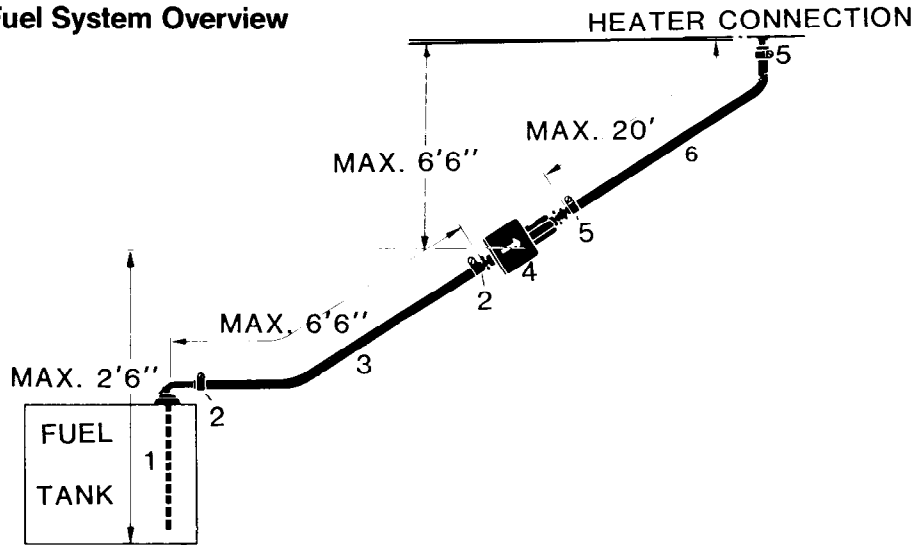

1. Fuel Pick Up Pipe (4mm)
2. 10mm Clamp
3. 5.0mm ID Fuel Line
4. Fuel Metering Pump
5. 7mm Clamp
6. 3.5mm ID Fuel Line

Installation Instructions

1. Fuel Pick Up Pipe
   - Decide on location point for pipe in tank (in a protected area)
   - Drill a one inch (1") hole in tank or blanking plate
   - Install pick-up pipe as shown in Figure 4 A.

CAUTION: Entry point must be above highest possible fuel level in tank.
NOTE: Alternative fuel pick up methods are also available.

Figure 4 A: Fuel Pick Up Pipe Installation

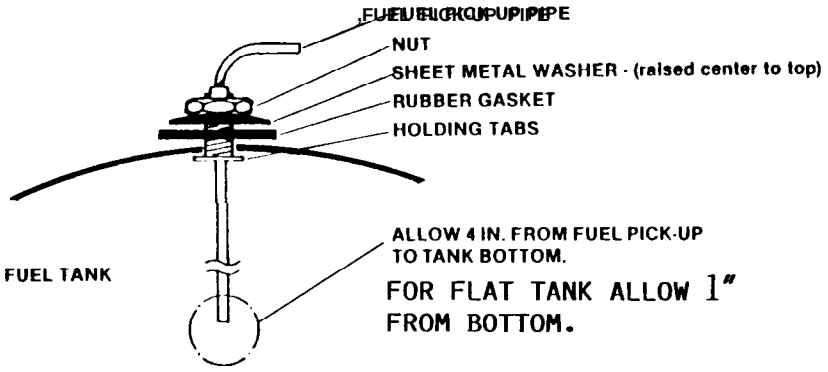

2. Fuel Metering Pump

- Decide on location for fuel pump

- Must be in a protected area near fuel tank

The fuel line maximum lengths are shown in Figure 4.
DO NOT EXCEED THESE LIMITS

- Using bracket, rubber seal and mounts, install fuel pump as shown in Figure 4 B.

Figure 4 B: Fuel Pump Installation

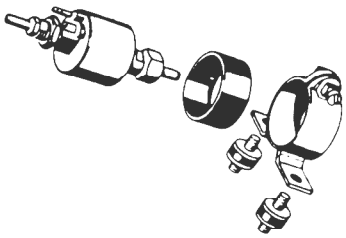

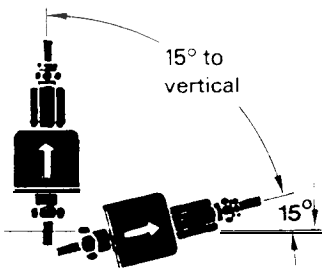

NOTE: The mounting angle of the fuel pump is critical, it is necessary to adhere to this angle to allow any air or vapor in the fuel lines to pass through the pump rather than cause a blockage and to provide accurate metering of the fuel.

NOTE: Always use fuel line of proper side ID - other sizes of fuel line will cause air or vapor locks and reduce suction causing improper heater operation.

3. Fuel Lines

- Route fuel lines and cut to length

- Connect the fuel lines using the clamps provided

- Connect as shown in Figure 4

5. Electrical Connections

A. Universal Type

1. Power Harness — 2 core harness (red and brown) with short ground lead
   Red wire direct to vehicle battery (positive)
   Brown wire to frame (ground)

2. Switch Harness: — 3 core harness (red, brown and yellow)
   Run to location of switch

3. Fuel Pump Harness: — 2 core harness (green and green)
   Run to location of fuel pump

4. Water Pump Harness: — 2 core harness (red and brown)
   Connect to plug at the water pump

5. Pig Tail Harness: (not shown) — Connects the above harnesses to the heater wiring under the cover

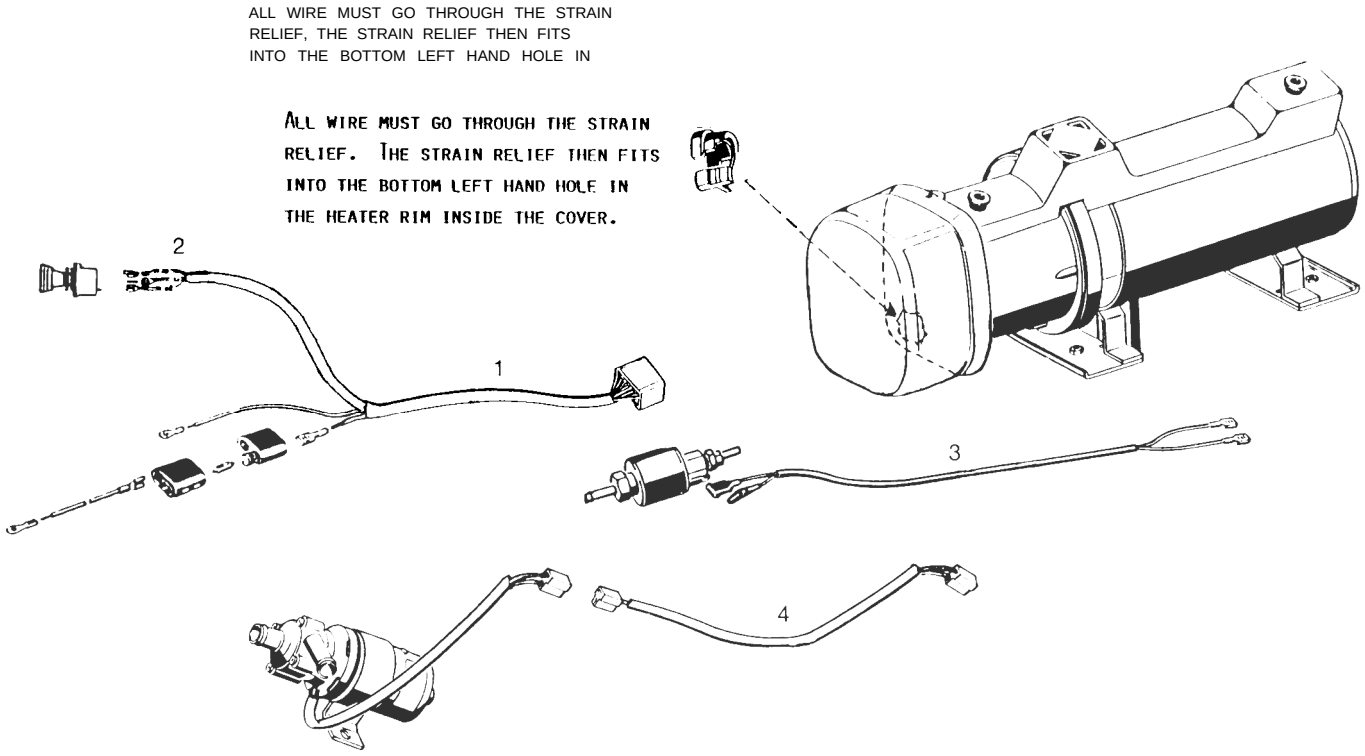

NOTE: All harnesses should be cut to length and properly routed (using tie wraps) to avoid breakage and friction damage.

NOTE: All exposed electrical connections should be coated with protective grease (petroleum gel, vaseline, etc.).

B. Boxed Version

1. Power Harness -2 core harness (red and brown) with short ground lead
   - Red wire direct to vehicle battery (positive)
   - Brown wire direct to vehicle battery (negative)

2. Switch Harness: -3 core harness (red, brown and yellow)
   - Run to location of switch

3. Fuel Pump Harness -2 core harness (green and green)
   - Run to location of fuel pump

4. Water Pump Harness - Pre-connected inside box

5. Pig Tail Harness: - Connects the above harnesses to the heater wiring under the cover

All harnesses should enter heater box through sealing grommets as shown in Figure 5 B. (if applicable).

Figure 5 B. Electrical connections - Boxed version

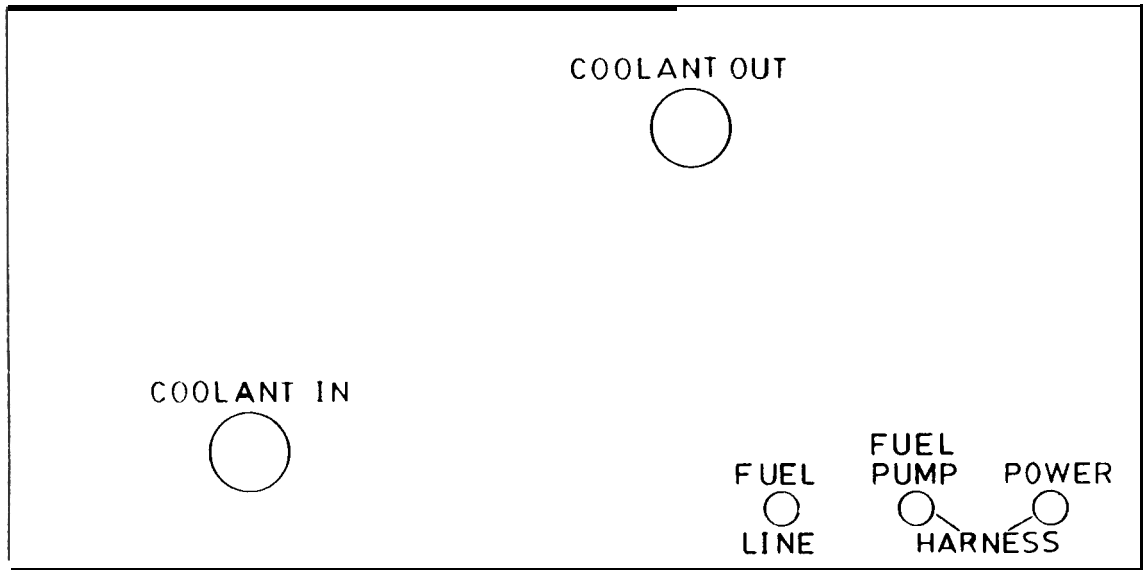

NOTE: All harnesses should be cut to length and properly attached (using tie wraps) to avoid breakage and friction damage.

NOTE: All exposed electrical connections should be coated with protective grease (petroleum gel, vaseline, etc.).

6. Exhaust Connection

A 42mm (15/8") diameter flexible stainless steel exhaust pipe (4 meters long - 13 feet maximum) is used with this heater. Feed the exhaust pipe through the silicone (white) gasket on the bottom of the box and attach to the exhaust outlet at the heat exchanger in the box (as shown in Figure 6. if applicable). Once secured to the heater exhaust outlet, the exhaust pipe must run to an open area to the rear or side of the vehicle so that fumes cannot build up and enter the cab or the heater box.

NOTE: THE EXHAUST IS HOT — KEEP A MINIMUM OF 2" CLEARANCE FROM ANY HEAT SENSITIVE MATERIAL.

Route exhaust so that exhaust fumes cannot enter the passenger compartment or the heater box.

Run exhaust so that it cannot be plugged by dirt, snow or water and allows water produced by combustion to run out.

Install exhaust pipe with a slight slope or drill a hole (5mm) in lowest point to allow water to run out.

Any restriction in exhaust will cause operational problems.

Figure 6.

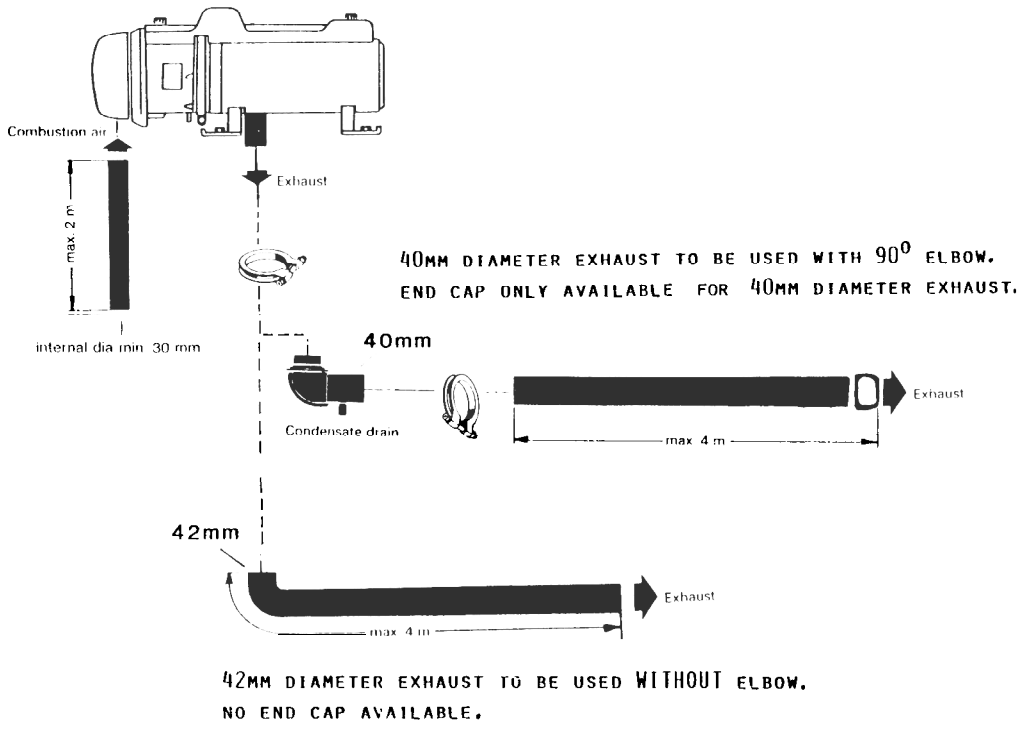

7. Operating Switches

A push/pull switch is provided with the heater, already connected to a fifteen foot (15') switch harness. Connect switch harness to connector block inside heater box and run harness to suitable location. Install switch and reconnect harness. Alternatively a 99 hour count down timer can be used. This timer can be used to start the heater either manually or automatically at a preset time (1-99 hrs).

Control Wiring

On/Off Switch (supplied with heater)

Wire connections
Brown - 31
Red - K(15)
Yellow - 15(K)

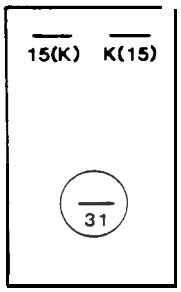

NOTE: Wired as above the switch light glows when pulled on and is out when pushed in.

99 Hour Digital Timer:

Wire Connections

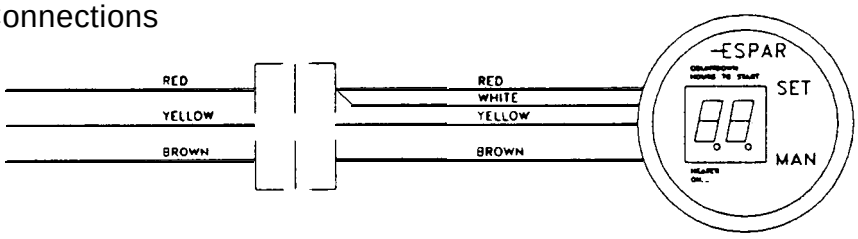

8. Pre-Start Procedures

NOTE: Prior to starting the heater, run the engine and top up coolant, to engine manufacturers recommendations.

Bleed the coolant system after heater installation as follows:

1. Fill the cooling system with coolant.
2. Run the engine and Espar coolant pump only for 5 minutes to bleed air from the coolant system.

NOTE: To operate Espar coolant pump only put power to Pin #5 (yellow with red stripe wire) of the 6 pin connector under the heater hood.

3. Shut off the engine.
4. Refill coolant and install radiator cap.

WARNING: When removing radiator cap use extreme caution because coolant may be hot and under pressure.

9. Heater Operation

A. Switch On - Start Up

Once switched on the following sequence of events takes place:

1. Switch light comes on.
2. Control box does system check.
3. Coolant circulation pump comes on.
4. Combustion blower comes on.
5. Glow plug and spark generator are activated.
6. Fuel metering pump starts.
7. Fuel and air mixture are ignited by glow plug.
8. Once ignition takes place the flame sensor will automatically switch the glow plug and spark generator off.

Ignition Time: 3 minutes maximum

NOTE: If the heater fails to ignite it switches off automatically not more than 3 minutes after being switched on. On initial start up several restarts may be required to prime the fuel system.

B. Running

Once ignition is successful the following operations take place

1. Heater switches into run mode.

2. Once the coolant reaches approximately 176°F (80°C), the heater will automatically cycle off.

NOTE: As long as the heater is switched on, the coolant pump will continue to circulate coolant regardless of whether the heater is ignited or has cycled off.

3. In cycled off mode the heater will automatically restart once the coolant temperature reaches 155° F (68° C) (with hot switch the temperatures are higher).

4. The heater will continue to run as described above until it is switched off either manually or by the timer.

NOTE: 1. While in running mode if the heater should shut down due to flame out it will automatically shut off the fuel supply (after no more than 4 minutes).
2. During operation the heater continually senses the input voltage from the batteries - if the input voltage drops to approximately 10.5v or 21v the heater will automatically shut down.

C. Switching Off

When the heater is switched off the fuel pump stops and flame is extinguished. The combustion air motor and coolant circulating pump continue to run for a three minute cool down cycle (approximate). Then the heater completely shuts off.

10. Safety Equipment

The flame is monitored by the flame sensor, while overheat termperature is monitored by the overheat cutout switch. both influence the control unit, which switches off the heater in the event of malfunction.

1. If the heater fails to ignite, it will switch off automatically within 3 minutes after being switched on.

2. If the flame goes out spontaneously during operation, the fuel supply stops after no more than 4 minutes.

3. If there is a malfunction caused by the blower motor - the motor current fuse built into the control unit blows and shuts off the heater.
4. If the heater should overheat (due to lackof coolant) the overheat cutout switch stops the fuel metering pump. The heater will shut off after the 3 minute cool down cycle.
5. When the coolant temperature reaches the desired peak value, the coolant thermostat keeps this temperature approximately constant by alternately switching the heater on and off.

NOTE: - The coolant must contain a minimum of 10% antifreeze at all times as a protection against corrosion. Fresh water will corrode internal heater parts.
- During **electrical welding work** on the vehicle, **disconnect** the **power** to the **heater,** in order to protect the control unit.

WARNING: The heater must be switched off while fuel tank on vehicle is being filled. The heater MUST NOT be operated in garages or enclosed areas due to combustion fumes.

11. Periodic Maintenance

1. Remove and inspect the glow plug for carbon build up. Clean and/or replace.
2. Clean the glow plug chamber using brass brush (Espar part number CAO 05 003) to remove any carbon build up. Use of nondetergent 100% volatile carburetor cleaner and air gun will also help in cleaning.
3. Remove and inspect the flame sensor, clean with a soft cloth if necessary.
4. Check coolant hoses, clamps, and make sure all valves are open before you start your heater or it will overheat. Maintain the engine manufacturers recommended coolant level and ensure that the heater is properly bled after service on or involving the coolant system.
5. Inspect combustion air intake and exhaust for blockage.
6. Run your heater and check for proper operation during regular P.M. throughout the year.
7. Maintain your batteries and all electrical connections in good condition. With insufficient electrical power the heater will not start. Low and high voltage cutouts will shut the heater down automatically.
8. Use fuel suitable for the climate (see engine manufacturers recommendations). Blending used engine oil with diesel fuel is not recommended.

Wiring Diagram Legend
D12W Universal 12v/24v
25 1744/45

1.1	Blower motor
1.2	Glow / Spark Plug
1.2.1	Series Resistor
1.3	Ignition spark generator
1.4.5	Temperature regulating switch
1.5	Safety thermal cutout switch
1.12	Flame monitor
2.1	Control unit
2.2	Fuel metering pump
2.5.1	Glow plug relay
2.5.6	Coolant pump relay
2.6.3	Coolant pump diode
2.7	Main fuse, 30A
2.12	Coolant circulating pump
3.1.1	Push/pull switch
3.2.2	Timer, 99hr countdown
5.1	Battery

WIRING DIAGRAM
D12W - 12V & 24V
25 1744 / 25 1745

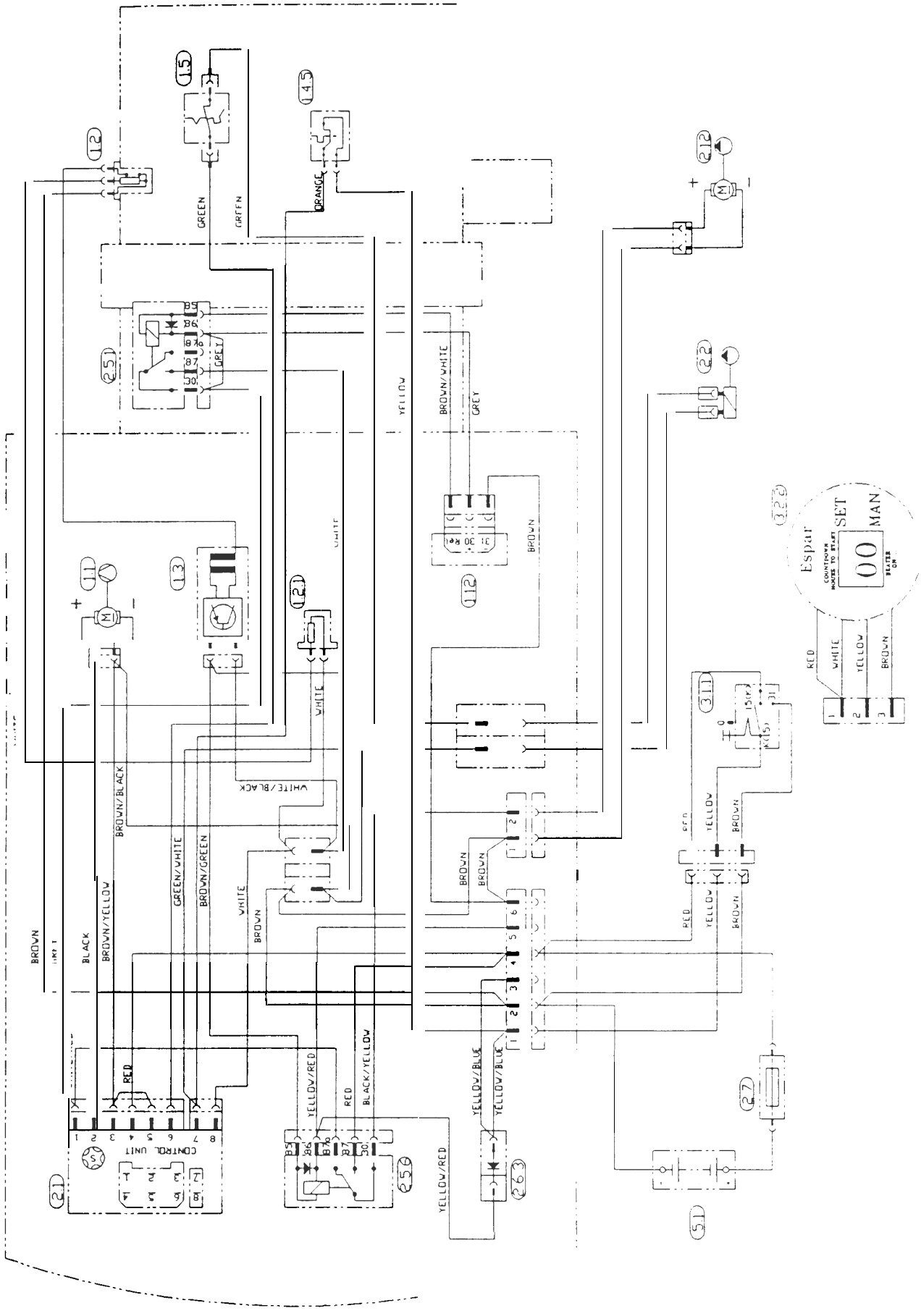

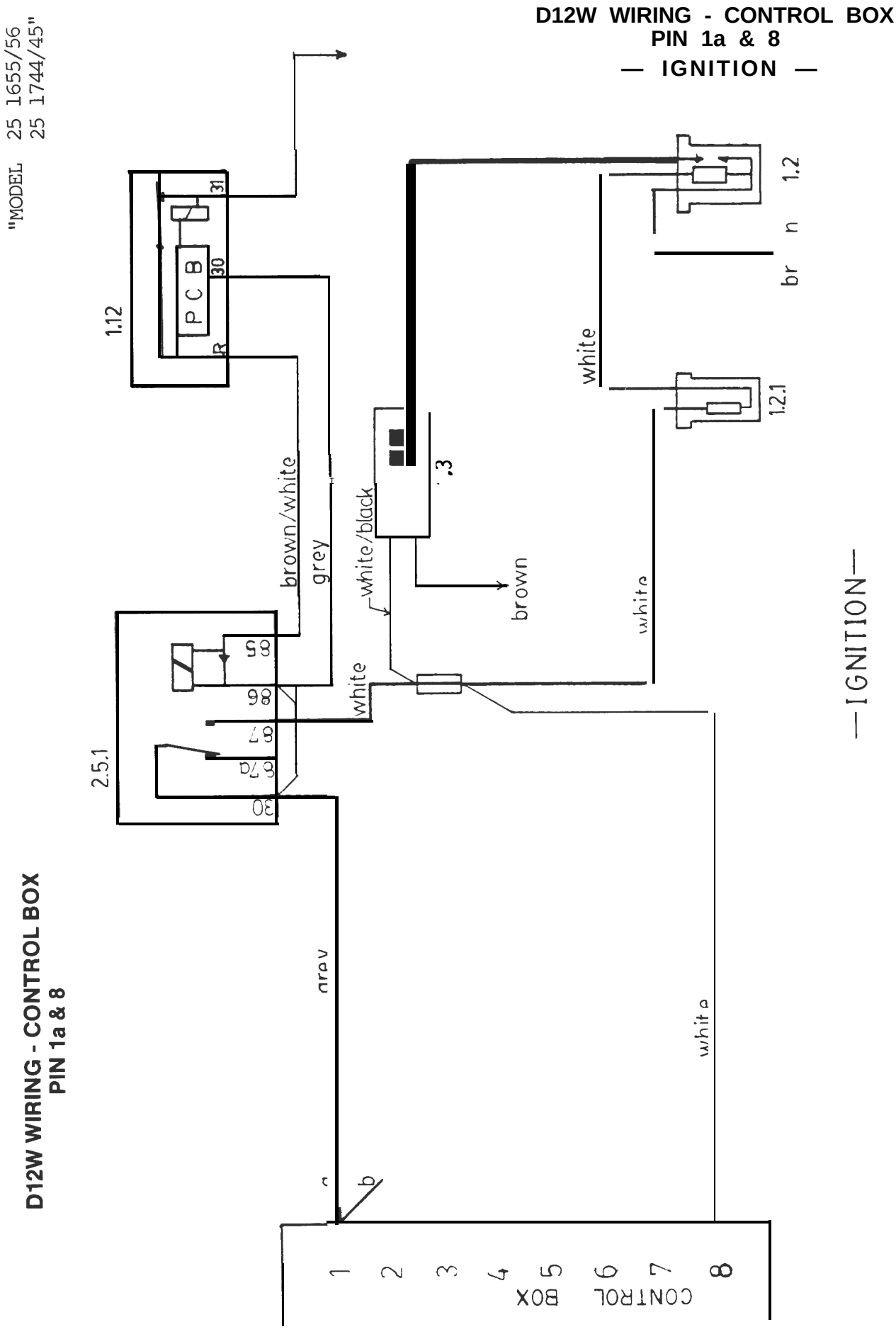
"MODEL 25 1655/56
25 1744/45"
D12W WIRING - CONTROL BOX
PIN 1a & 8
— IGNITION —
1.12
P C B
31
30
R
brown/white
grey
white/black
.3
brown
white
1.2
br n
1.2.1
white
2.5.1
85
86
87
87a
30
—IGNITION—
D12W WIRING - CONTROL BOX
PIN 1a & 8
grey
white
b
CONTROL BOX
1 2 3 4 5 6 7 8

"MODEL 25 1655/56
25 1744/45"

D12W WIRING - CONTROL BOX
PIN 2,3, & 5
— BLOWER MOTOR —

D12W WIRING - CONTROL BOX
PIN 2, 3, & 5
— BLOWER MOTOR —

D12W WIRING - CONTROL BOX
PIN 4,6, & 7
— TEMPERATURE AND FUEL —

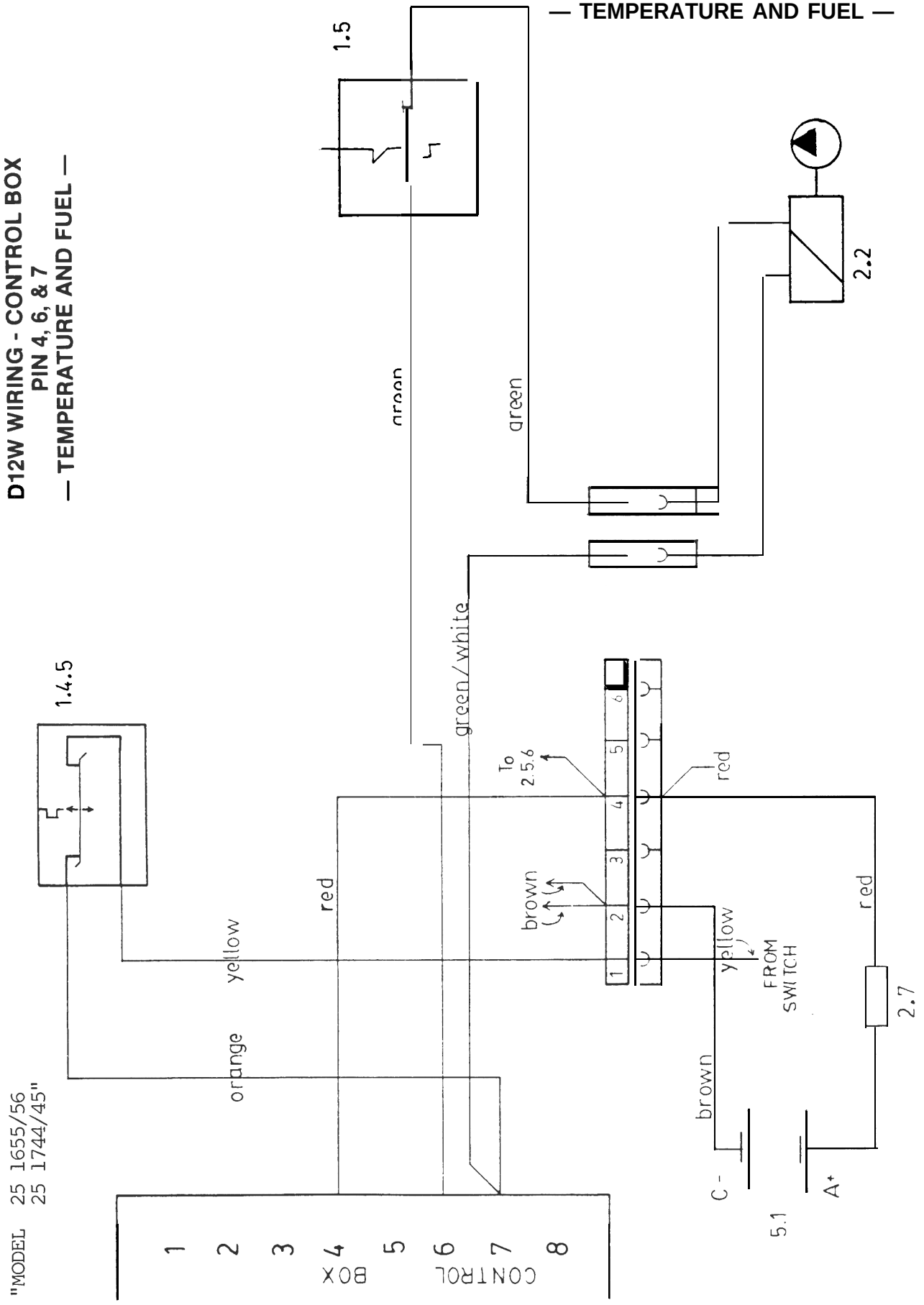

D12W - 12v - CONTROL UNIT

#25 -1570-50

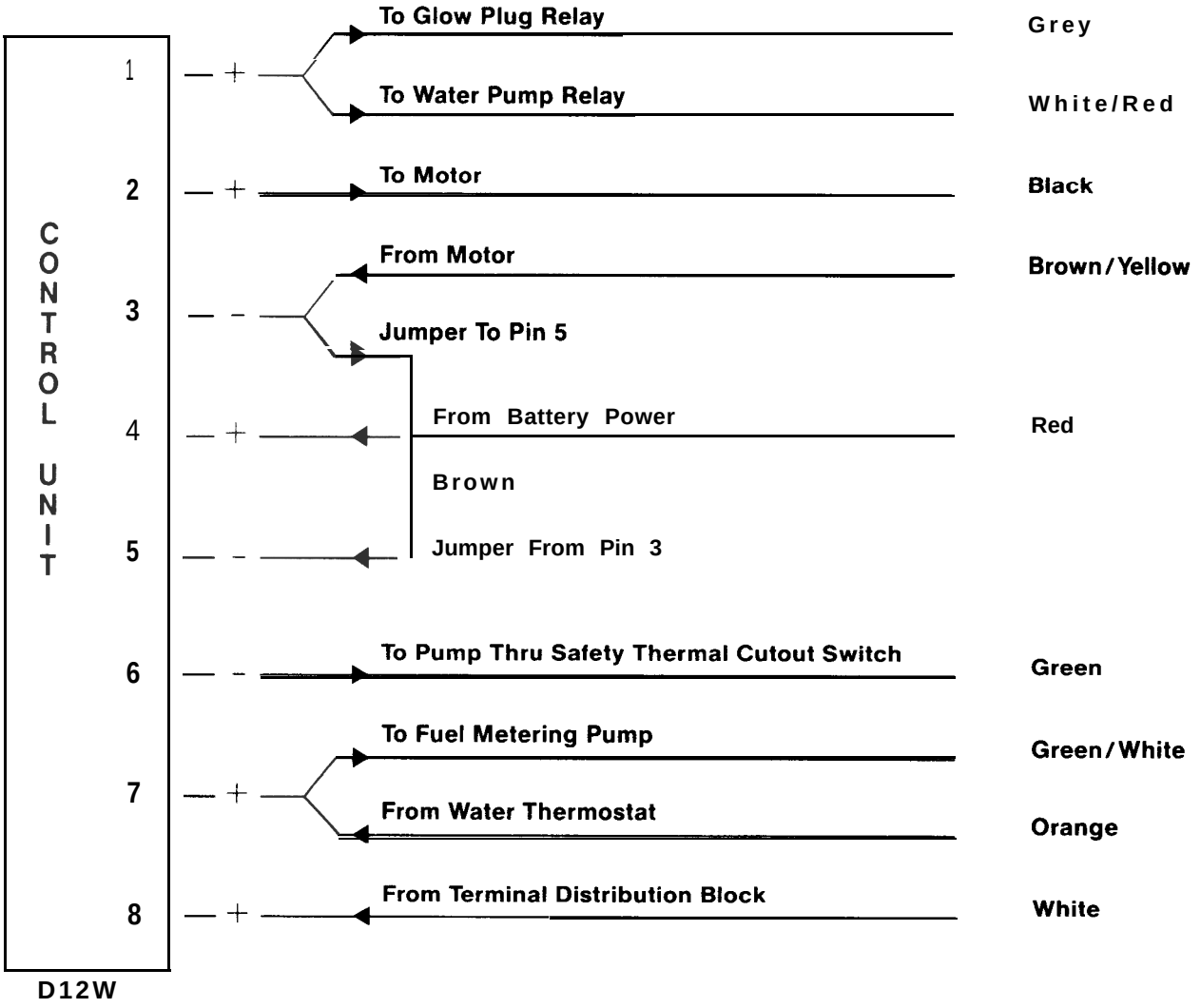

Power Input: + Pin #4 Red
- Pin #3 Brown/Yellow

TROUBLESHOOTING

Should failure occur, there are several items which should be checked first before any major troubleshooting is done.

Basic Troubleshooting

Check the following:

1. Fuse in power harness.
2. Motor fuse in control box.
3. Glow plug.
4. Electric lines and connections.
5. Are combustion air and exhaust pipes clear?
6. Is there fuel in the tank?
7. Does the coolant pump run when heater is switched on?

   If not — check for voltage at coolant pump motor.
   If you have voltage: - replace coolant pump.
   If no voltage: - replace control unit.

If the heater still does not function proceed with the following checks.

Troubleshooting

Fault → / Cause ↓	No blower noise approx. 5 secs. after switch-on	Blower runs, approx. 5 secs. after switch-on, for about 5 secs., then cuts automatically	Blower runs about 5 secs. after switch-on, pump ticks, automatic cutout after 3 minutes	Blower runs about 5 secs. after switch-on, pump does not tick, then automatic cutout after 3 minutes	Heater cuts out permanently during heating operation	Heating capacity insufficient or heater goes off by itself	Heater smokes and soots	Blower continues to run after switch-off longer than the usual delayed cutoff time (3 - 4 minutes)
Main 16A fuse defective	0							
Glow ignition plug (GZE 201) coked/defective			0					
Motor current fuse in control unit defective	0							
Safety thermal cutout switch has responded					0			
Ignition spark generator defective			0					
Glow plug series resistor defective			0					
Undervoltage		0						
Overvoltage		0			0			
Control unit not supplying pulses for the fuel metering pump				0				
Reed relay in control unit has no contact		0						
On/off switch, timer, control switch defective	0							
Plug relay sticking in D12W (25 1744/45) with temperature switch			0					
Electronic delayed shutoff unit defective in D12W (25 1744/45) with flame sensor								0

Check	Remedy
Visual/continuity check	Remove short-circuit in the wiring or coke from the heating coil of the glow ignition plug, replace the glow ignition plug if necessary
Visual/continuity check	If necessary, change glow ignition plug
Visual/continuity check	Remove damage in combustion air system motor or blower, change the motor current fuse
Switch off the heater Check water flow (min. 1000 l/h)	Remove air from water circuit, operate the safety thermal cutout switch
Hold high-tension cable approx. 5 mm away from earth	If necessary, change the ignition spark generator
Visual/continuity check	If necessary, change the glow plug series resistor
Measure voltage at 6-pin plug, terminals 4 and 2, min. voltage 10.5 or 21 V	Charge battery Check wiring for voltage drops
Measure voltage at 6-pin plug, terminals 4 and 2, max. voltage 14.5 or 29 V	Check dynamo regulator, change if necessary
Connect pilot light to the contacts of the fuel metering pump or terminal 6 on the control unit, if no pulses are available	Change the control unit
See Fault	Change the control unit
Visual/continuity check	If necessary, change the operating element
Check relay functioning	If necessary, change the plug relay
See Fault	Change the optical flame sensor

Troubleshooting

Fault → / Cause ↓	No blower noise approx. 5 after switch-on	Blower runs, approx. 5 secs. after switch-on, for about 5 secs., then cuts automatically	Blower runs about 5 secs. after switch-on, pump ticks, automatic cutout after 3 minutes	Blower runs about 5 secs. after switch-on, pump does not tick, then automatic cutout after 3 minutes	Heater cuts out permanently during heating operation	Heating capacity insufficient or heater goes off by itself	Heater smokes and soots	Blower continues to run after switch-off longer than the usual delayed cutoff time (3 - 4 minutes)
Fuel metering pump not pumping				0				
Fuel metering pump pumping too much							0	
Fuel metering pump pumping too little			0			0		
Fuel line leak Filter clogged Air in the fuel line			0			0		
Combustion and/or exhaust line clogged							0	
Combustion air blower speed too low							0	
Electric motor defective	0							
Blower damage (Combustion air blower damage)	0							
Temperature switch does not respond in D12W 25 1744/45			0					
Optical flame sensor defective in D12W 25 1744/45			0					

Check	Remedy
Connect test lamp to the fuel metering pump when pulses are present	Replace fuel metering pump
Measure fuel quantity; if the quantity is outside the permissible tolerance	Replace fuel metering pump
Measure fuel quantity; if the quantity is outside the permissible tolerance	Replace fuel metering pump
Visual check	Seal and bleed fuel line, change filter
Visual check	Remove blockage
Measure speed at motor shaft 5900 RPM ± 10% (at rated voltage)	Change electric motor
If the shaft of the electric motor does not turn	Replace burner
If the shaft of the electric motor turns	Change electric motor
Defect is present when there is still minus at terminal 85 (glow plug relay) after max. 120 sees. after switch-on	Change temperature switch
Clean quartz rod on flame sensor with a soft cloth: if no function:	Change the optical flame sensor

– NOTES –

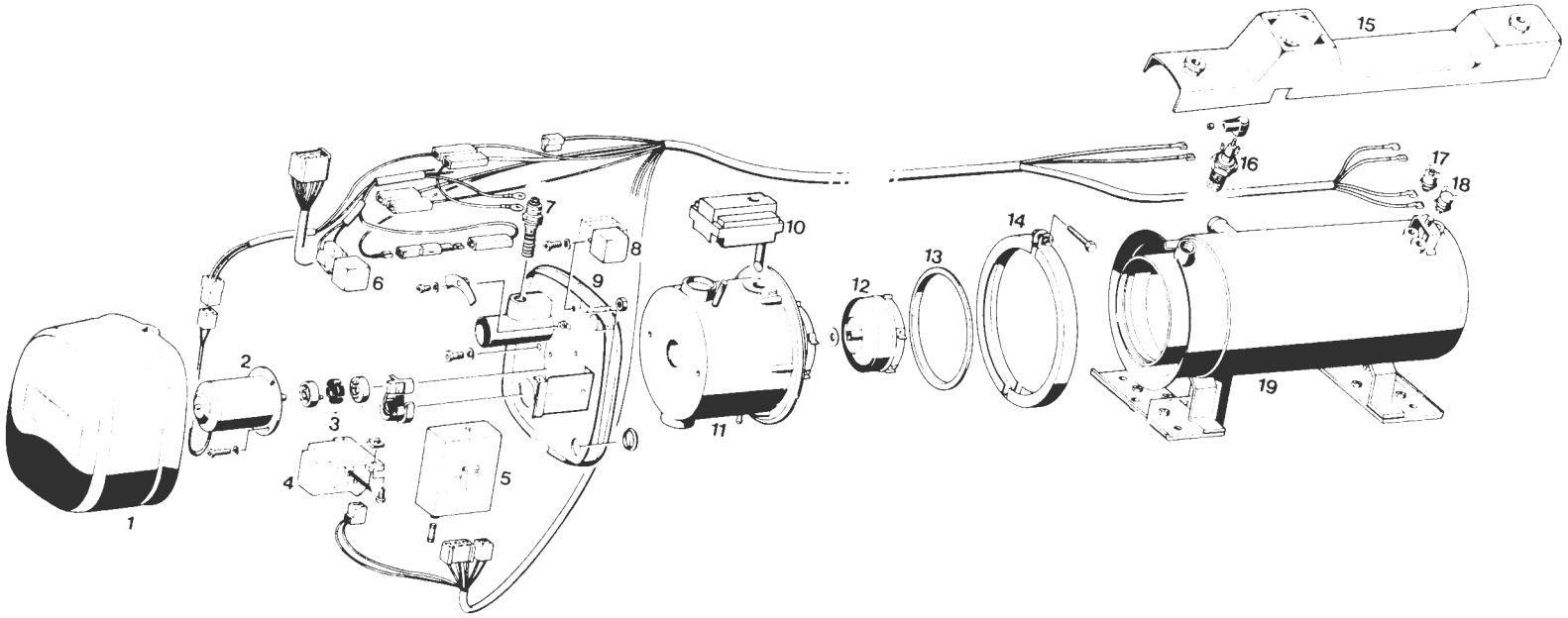

1 Hood
2 Electric motor
3 Coupling
4 Ignition spark generator
5 Control unit
6 Glow plug relay
7 Series resistor
8 Water pump relay
9 Support plate
10 Flame sensor in D· 2W 25 1744/45
11 Burner
12 Atomizer
13 Sealing ring
14 Profile clip
15 Cable duct
16 Glow plug
17 Safety thermal cutout switch
18 Control switch
19 Heat exchanger

Repair Steps

1. Removing and installing the glow plug
2. Removing and installing the safety thermal cutout switch
3. Removing and installing the control switch
4. Removing and installing the temperature switch
5. Removing and installing the ignition spark generator
6. Removing and installing the series resistor
7. Removing and installing the series resistor
8. Removing and installing the electric motor
9. Removing and installing the water pump diode
10. Removing and installing the glow plug and water pump relays
11. Removing and installing the burner head
12. Removing and installing the flame sensor

---

1. Removing and installing the glow plug

Undo the knurled nuts and remove the cable duct.
Detach plug connector and cable plug from the glow plug.
Unscrew the glow plug using deep 5/8% socket.
Screw the glow plug back in, or replace it
if necessary, following visual and continuity test.

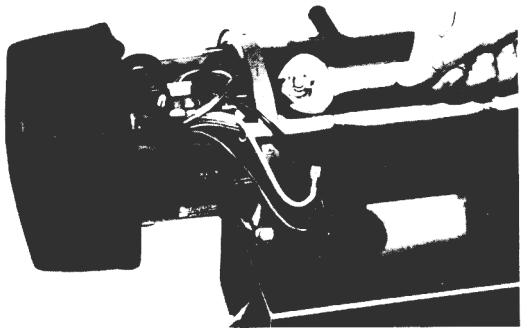

Fig. 1

2. Removing and installing the safety thermal cutout switch

Undo the knurled nuts and remove the cable duct.
Detach the cable plug.
Unscrew the safety thermal cutout switch.
Replace the safety thermal cutout switch.



Fig. 2

3. Removing and installing the control switch

Undo the knurled nuits and remove the cable duct.
Detach the cable plug.
Unscrew the control switch.
Replace the control switch.

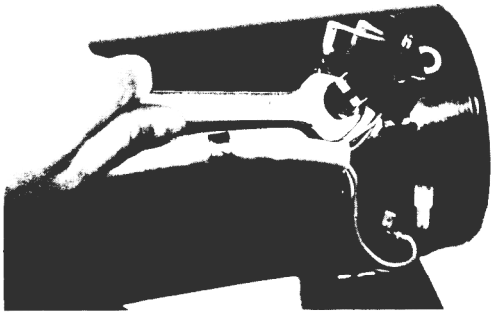

Fig. 3

4. Removing and installing the temperature switch (heater design 25 1744/45)

Remove the protective rubber cap.
Detach the cable plug.
Unscrew the temperature switch.
Replace the temperature switch.



Fig. 4

5. **Removing and installing the ignition spark generator**

Remove the hood.
Undo the knurled nuts and remove the cable duct.
Detach plug connector and cable plug from the glow plug.
Unscrew the plug connector from the high-tension cable.
Pull the high-tension cable out through the rubber grommet.
Remove the plug housing from the ignition spark generator.
Undo the screws from the ignition spark generator.
Replace the ignition spark generator.
Pass the high-tension cable back through the rubber grommet and screw on the plug connector.
Reattach the plug housing to the ignition spark generator.
Reattach the plug connector and the cable plug to the glow plug.

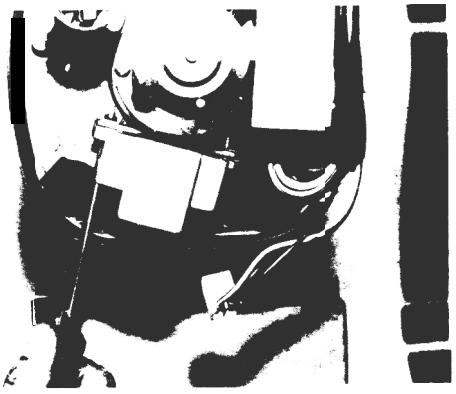

Fig. 5

6. Removing and installing the control unit

Remove the hood.
Detach both plugs from the control unit.
Remove the control unit off the holding bracket,
Replace the control unit.

N o t e

When installing a new control unit a motor current fuse must be placed in it.



Fig. 6

Cat. No. for motor current fuse
12 V 2515700501 00
24 V 251531 050200

7. Removing and installing the series resistor

Remove the hood.
Undo the connecting cable from the series resistor
Unscrew the series resistor.
After visual and continuity test, screw the series resistor, or if necessary a new one, back in.

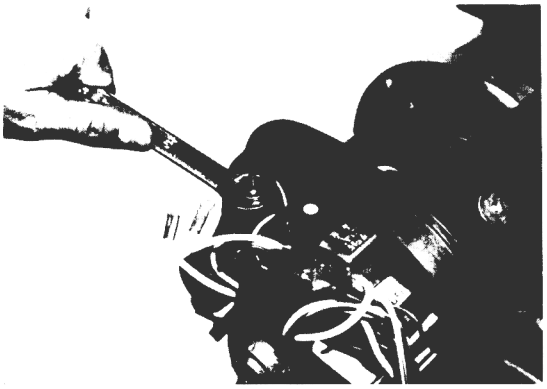

Fig. 7

8. Removing and installing the electric motor

Check the motor current fuse in the control unit and replace it if necessary.
Remove the hood.
Detach the plug housing from the electric motor at the cable harness.
Remove the control unit (see repair step 6).
Undo the 3 cross-head screws on the flange of the electric motor.
Remove the electric motor.
Install the new electric motor.

Note
When the motor is replaced, the driver pins of the two coupling halves must be seated in the recesses of the driver disc.



Fig. 8

9. Removing and installing the water pump diode

Remove the hood.
Detach the cable plug from the diode housing.
install a new diode (diode connections cannot be mixed up).

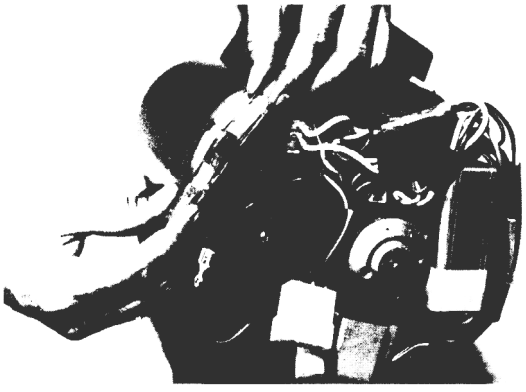

Fig. 9

10. Removing and installing the glow ignition plug and water pump relays

Detach the relay from the connection base.
Replace the relay.



Fig. 10

11. Removing and installing the burner head

Undo the knurled nuts and remove the cable duct.
Remove the hood.
Detach the cable plugs from the safety thermal cutout, control and temperature switches.
Detach plug connector and cable plug from the glow plug.
Undo the fuel connection and detach it.
Detach the plug connections for current supply (6-pin plug), for the water pump (2-pin plug) and the fuel metering pump (2-pin flat connector housing).
Pull cable with plug out of the penetration hole.
Open the Vee-profile clamp and remove the burner head.

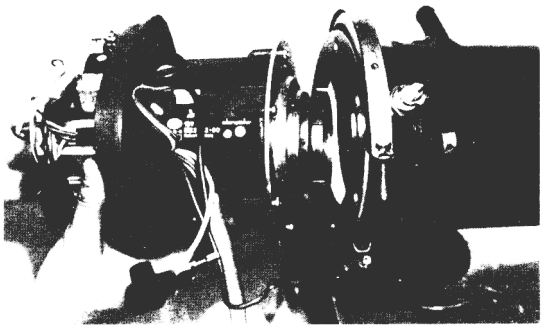

Fig. 11

Note:
The seal should as a rule be changed when the burner head is changed.

12. Removing and installing the flame sensor (heater design 25 1744/45)

Undo the knurled nuts and remove the cable duct.
Detach the plug from the flame sensor.
Undo the cross-head screw in the middle of the flame sensor housing.
Pull the flame sensor out of the hole.
Replace the flame sensor. Make sure that silicone sealing washer is re-used with new sensor.



Fig. 12

Tightening torque of cross-head screw is 1 ft-lb maximum.

Measuring the fuel quantity

IMPORTANT:

Only measure the fuel quantity when the battery is sufficiently charged. At least 11/22 V and at most 13/26 V must be applied at the control unit during measurement.

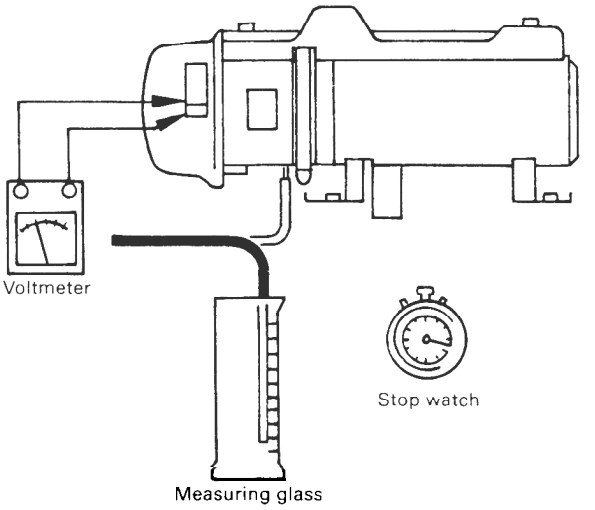

1. Preparation

Detach the fuel line from the heater and place it into a measuring glass (50 ml). Connect voltmeter to terminal 3 (–) and 4 (+) of the 6-pin plug. Have a stop watch ready.
Switch on the heater until fuel is being pumped evenly. The fuel line is now filled and bled.
Switch off the heater, and empty the measuring glass.

2. Measurement

Switch on the heater.
As soon as fuel is being pumped, switch on the stop watch, read off the voltage on the meter, switch the heater back off after one minute, and read off the fuel quantity.

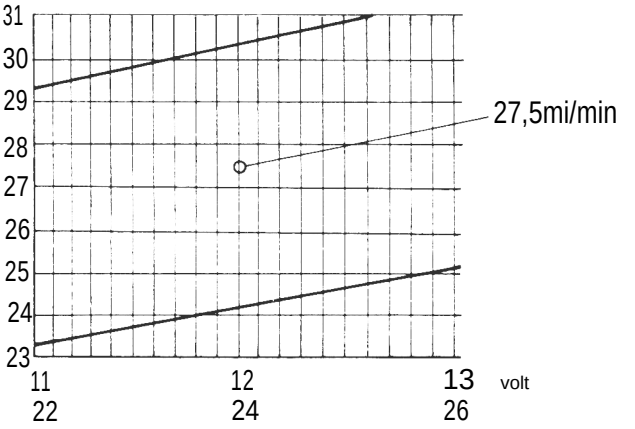

3. Evaluation

Using the diagram, read upwards from the measured voltage and horizontally from the fuel quantity measured during one minute.
The intersection of the two lines must be within the two limit curves. If not, replace the metering pump.

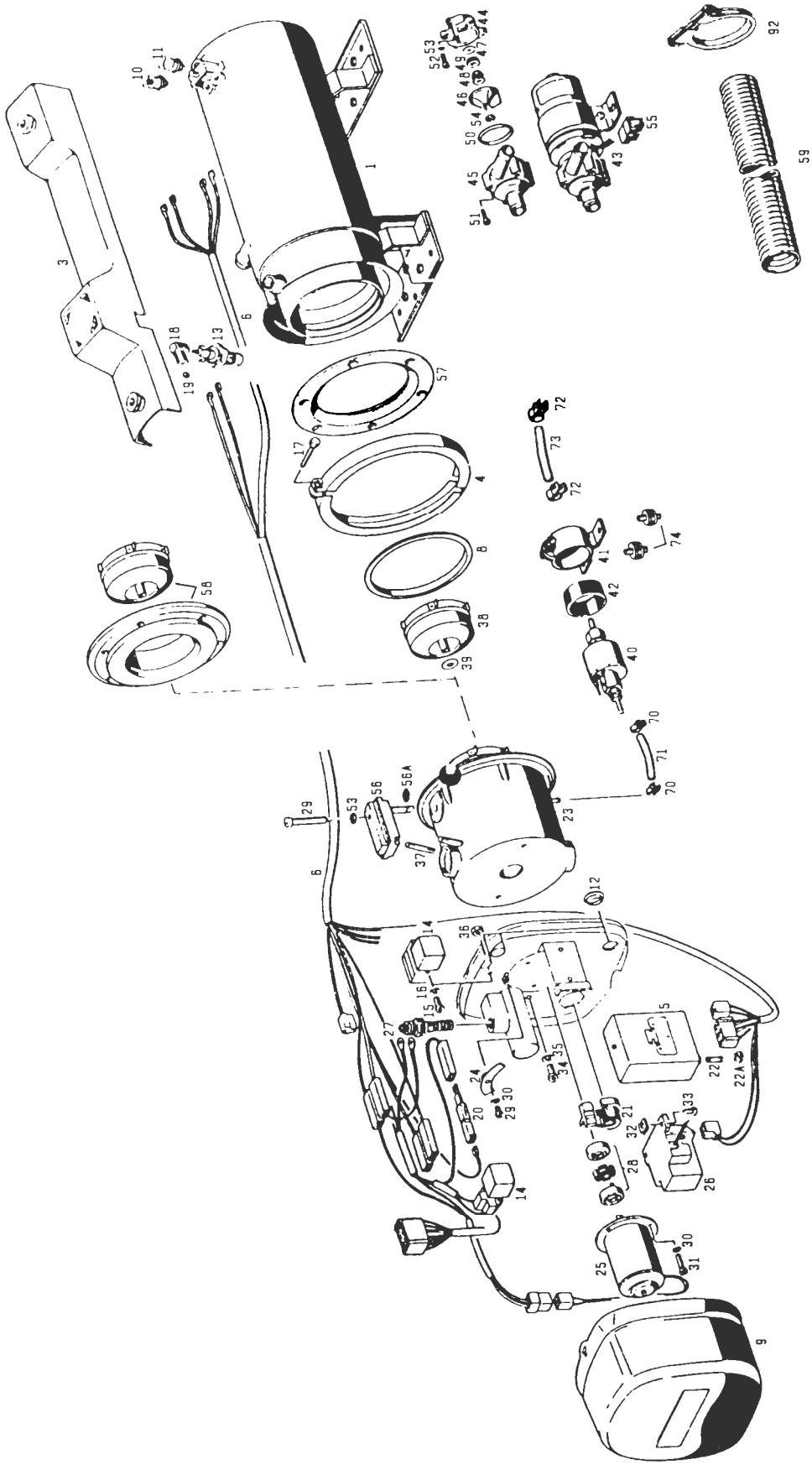
1
3
4
6
8
9
10
11
12
13
14
15
16
17
18
19
20
21
22
22A
23
24
25
26
27
28
29
30
31
32
33
34
35
36
37
38
39
40
41
42
43
44
45
46
47
48
49
50
51
52
53
54
55
56
56A
57
58
59
70
71
72
73
74
92

PARTS MANUAL

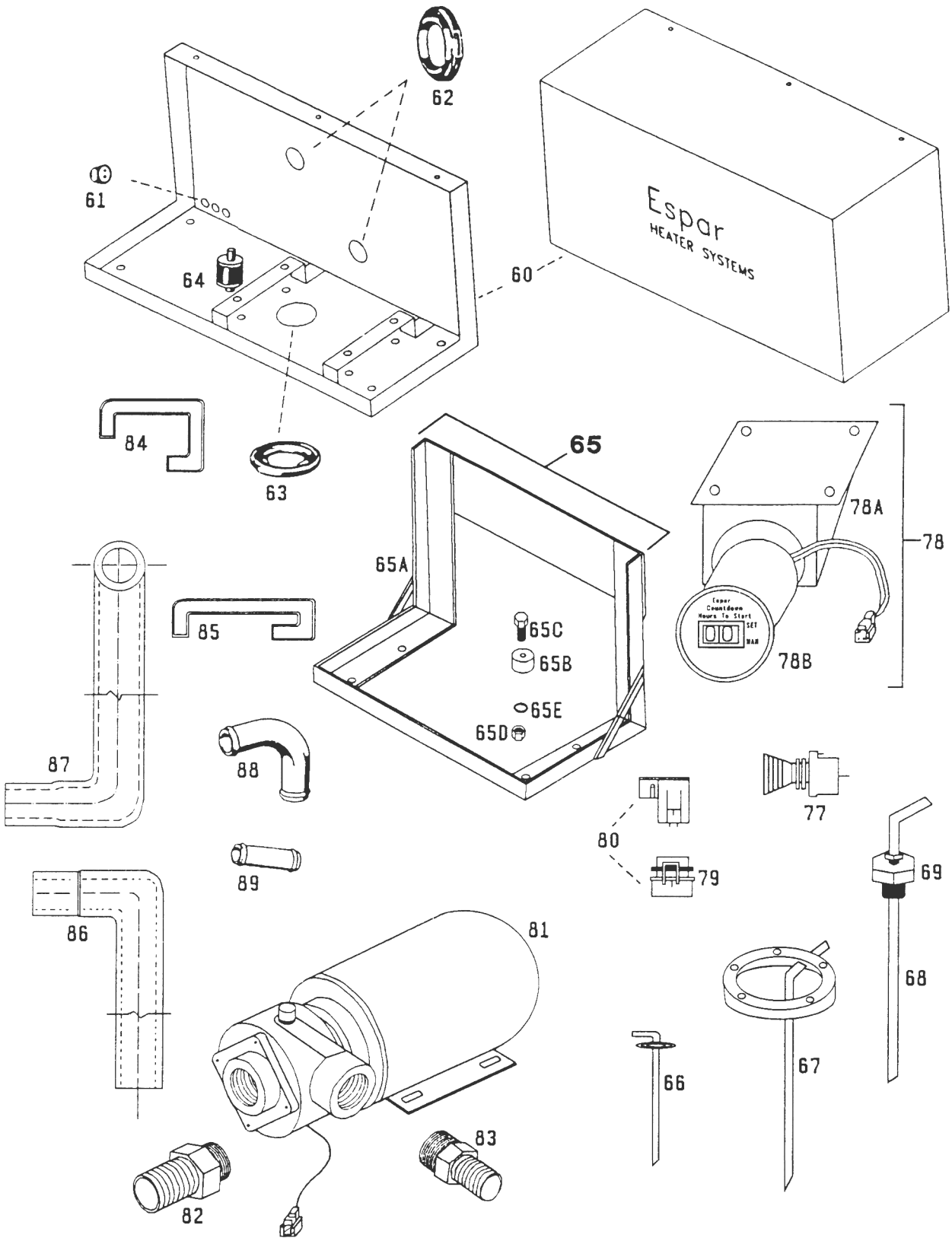

PARTS LIST

*All parts for 12 or 24 volt heaters are the same except as noted.

Ref. No.	Description		Part Number
1	Heat Exchanger	Model 25 1744/45	25 1678 06 00 00
3	Glow Plug Cover		25 1571 01 04 00
4	Clamp		25 1571 01 02 00
5	Control Box	12V	25 1570 52 00 00
		24V	25 1571 52 00 00
6	Main Heater Harness		25 1656 01 02 00
8	Seal Ring		25 1571 01 00 09
9	Hood		25 1571 01 00 05
10	Safety Thermal Cutout Switch		25 1578 01 00 03
11	Temperature Regulating Switch Standard		25 1571 41 01 01
	High Temperature Switch		25 1436 01 00 03
12	Grommet		20 1280 09 01 03
13	Glow Plug		25 1431 01 00 03
14	Relay	12V	203 00 065
		24V	203 00 066
15	Fillister Head Screw M5x12		H
16	Spring Washer B5		H
17	Screw M6x40		100 10 053
18	Ignition Line Plug Connector (Cover)		206 00 150
19	Reduction Piece		206 31 019
20	Diode		208 00 012
21	Grommet		320 31 061
22	Fuse TT8	12V	204 00 080
	Fuse TT4	24V	460 26 016
22 A	Fuse Holder Cap		204 00 102
23	Burner		25 1655 16 00 00
24	Combustion Air Regulator		25 1571 15 04 00
25	Electric Motor	12V	25 1570 15 05 00
		24V	25 1571 15 05 00
26	Ignition Spark Generator		20 1643 01 01 00
27	Glow Plug Series Resistor	12V	25 1570 15 00 02
		24V	25 1571 15 00 02
28	Coupling Complete		25 1426 99 55 00
29	Filiister Head Screw M4x8		H
30	Spring Lockwasher B4		H
31	Fillister Head Screw M4x20		CA3 00 107
32	Sheetmetal Nut		119 10 031
33	Sheetmetal ScrewB4.8x19		H
34	Fillister Head Screw M6x12		CA3 00 103
35	Serrated Lockwasher B6		CA3 00 308
36	Hex Nut M5		CA3 00 206
37	Screw M5x40		106 10 020
38	Atomizer		25 1656 1 6 06 00

Ref. No.	Description		Part Number
39	Spacer Washer - Burner		25 1426 15 03 01
40	Fuel Metering Pump	12V	25 1570 45 00 00
		24V	25 1571 45 00 00
41	Fuel Metering Pump Holder		25 1156 20 00 11
42	Rubber Ring -FMP		20 1449 00 10 01
43	Coolant Circulating Pump	12V	25 1655 25
		24V	25 1656 25
44	Pump Flange		25 1571 25 01 01
45	Coolant Pump Case		25 1571 25 01 02
46	Impeller Wheel		25 1571 25 01 03
47	Disc		25 1571 25 01 05
48	Axial Face Seal		329 00 090
49	Ring Complete		329 00 082
50	O Ring		320 31 095
51	Self Tapping Screw BZ3.9X25		H
52	Fillister Head Screw M4xI2		H
53	Spring Washer B4		H
54	Locknut M4		114 10 055
55	Female 2 Hole Socket		206 31 004
56	Flame Sensor	12V	25 1655 99 01 01
		24V	25 1656 99 01 01
56 A	Seal Ring		25 1656 01 00 02
57	Flange		Special Order Only
58	Baffle Plate with Atomizer		25 1571 99 18 00
59	Flexible Stainless Steel Exhaust 42mm		WG4 42 000

BOX PARTS AND ACCESSORIES

60	Heater Box - Base	Special Order Only
	Cover	Special Order Only
61	Grommet for Harnesses and Fuel Line	20 1280 09 01 03
62	Grommet for Coolant Hose	CA0 11 009
63	Silicone Exhaust Gasket	20 1282 20 00 02
64	Rubber Shock Mounts 5/16“	CA0 00 040
65	Side Mount Mounting Bracket Kit	CA0 10 056
65 A	Bracket Only	CA0 10 027
65 B	Mounting Spacers	CA0 30 122
65 C	Bolt M8x50	CA3 00 128
65 D	Hex Nut M8	CA3 00 209
65 E	Lock Washer 8mm	CA3 00 302

FUEL SYSTEM

66	Standard Fuel Pick Up Pipe	CA0 12 058
67	Custom Ring Type Fuel Pick Up Pipe	CA0 12 012
Not Shown	Gasket for #67	CA0 12 040
68	Custom Straight Pick Up Pipe	
	16“ Length	CA0 00 030
	24” Length	CA0 12 053

Ref. No.	Description		Part Number
69	Compression Fitting		
	1/4" NPT		CA0 12 044
	3/8" NPT		CA0 00 031
	1/2" NPT		CA0 12 005
70	9mm Fuel Line Clamp (Pressure Side)		10 2061 00 90 98
71	3.5mm Rubber Fuel Hose (Pressure Side)		360 75 300
72	10mm Fuel Line Clamp (Suction Side)		10 2063 01 00 98
73	5mm Rubber Fuel Hose (Suction Side)		360 75 130
74	6mm Rubber Shock Mounts for Fuel Pump		20 8460 01 00 15
	ELECTRICAL SYSTEM		
Not Shown	Installation Harness Kit		CA1 60 512
	Includes: 15' Power Harness		
	25' Switch Harness		
	20' FMP Harness		
	10' Water Pump Harness		
Not Shown	Pigtail Harness		CA1 60 519
77	Push/Pull Switch with Light	12V	CA1 00 003
		24V	CA1 00 004
Not Shown	Replacement Bulb	12V	207 00 005
		24V	207 00 006
78	99 Hour Countdown Timer with Bracket		CA1 00 050
78 A	Bracket Only		CA0 00 032
78 B	Timer Only		CA1 00 051
79	Main Fuse 30A		CA1 07 004
80	Main Fuse Holder		CA1 07 001
	PLUMBING SYSTEM		
81	High Capacity Water Pump	12V	CA1 00 019
		24V	CA1 00 083
82	1" Pump Fitting		CA0 11 015
83	5/8" Pump Fitting		CA0 11 002
84	Preformed Hose - Standard Pump to Heater		CA0 11 010
85	Preformed Hose - High Capacity "Pump to Heater		CA0 11 008
86	Preformed Hose -90° to High Capacity Pump		CA0 11 012
87	Preformed Hose -90° to Heater Outlet		CA0 11 013
88	1" Steel Elbow 90°		CA0 11 021
89	1" Steel in Line Connector		CA0 11 022
Not Shown	7/8" Hose Clamp		CA1 10 038
Not Shown	1" Hose Clamp		CA1 10 039

– NOTES -

– NOTES –

Carrier

TRANSICOLD

OPERATION AND SERVICE MANUAL

MODEL 05G and 05G BUS COMPRESSOR

UNITED TECHNOLOGIES CARRIER TRANSICOLD

Carrier Transicold Division, Carrier Corporation, P.O. Box 4805, Syracuse, N.Y. 13221 U. S. A.
Carrier Transicold E.T.O. Boite Postale Nr. 16 Franqueville – Saint–Pierre 76520 Boos, FRANCE

Replaces: 62-03432-01 and T-199-02

© Carrier Corporation 1995 • Printed in U. S. A. 0395

TABLE OF CONTENTS

Section		Page
1	**DESCRIPTION**	**1-1**
1.1	Introduction	1-1
1.2	General Description	1-1
1.3	Compressor Reference Data..	1-1
1.4	Detailed Description	1-3
1.4.1	Suction and Discharge Valves.	1-3
1.4.2	Suction & Discharge Service Valves	1-3
1.4.3	Lubrication System	1-3
1.5	CompressorUnloader.	1-4
1.5.1	Hot GasBypass Unloader	1-4
1.5.2	Suction Cutoff Unloader	1-5
1.5.3	Pressure–OperatedUnloaders	1-6
2	**COMPRESSOR REPLACEMENT**	2-1
2.1	Compressor Removal	2-1
2.2	CompressorReplacement	2-1
2.2.1	Installing Compressor Unloaders	2-1
2.2.2	Installing Compressor	2-2
3	**COMPRESSOR MAINTENANCE**	3-1
3.1	Introduction	3-1
3.2	Inspection and Preparation for Reassembly	3-1
3.3	Cylinder Head and Valve Plate	3-1
3.4	Oil Pump andBearingHead	3-2
3.4.1	Low Profile Gear Pump	3-2
3.4.2	Gear Pump	3-3
3.4.3	Vane Pump	3-4
3.5	Shaft Seal	3-5
3.6	Compressor Running Gear Removal	3-5
3.7	Compressor Running Gear Reassembly	3-7
3.8	Suction Strainer	3-8
3.9	Adding Oil	3-8
3.10	Installing Compressor	3-8

LIST OF ILLUSTRATIONS

Figure		Page
1-1	Mode 105G Compressor	1-2
1-2	Suction & Discharge Valve	1-3
1-3	Oil Pumps	1-3
1-4	Compressor Unloader –Hot Gas Bypass	1-4
1-5	Compressor Cylinder Head Unloaded – Hot Gas Bypass	1-4
1-6	Compressor Cylinder Head Loaded – Hot Gas Bypass	1-5
1-7	Compressor Cylinder Head Unloaded) – Suction Cutoff	1-5
1-8	Compressor Cylinder Head (Loaded) – Suction Cutoff	1-6
1-9	Pressure-Operated Unloader Loaded Operation	1-6
1-10	Pressure-Operated Unloaded Unloaded Operation	1-6
2-1	Removal of Piston P1ug	2-1
2-2	Oil Level in Sight Glass	2-2
3-1	Cylinder Head & Valve P1ate	3-1
3-2	Installing Suction Valves	3-2
3-3	Checking Suction Valve	3-2
3-4	Oil Pump and Bearing Head Assembly	3-2
3-5	Low Profile Gear Oil Pump	3-2
3-6	Gear Oil Pump	3-3
3-7	Vane Oil Pump	3-4
3-8	Shaft Seal	3-5
3-9	Shaft Seal Removal	3-5
3-10	Bottom Plate Removal	3-5
3-11	Bottom Plate and Oil Strainer Removed	3-6
3-12	Piston Rings Removed	3-6
3-13	Connecting Rod, Piston, and Pin	3-6
3-14	Seal End Main Bearings	3-7
3-15	Contoured Piston	3-7
3-16	Installing Piston Rod Assemblies and Seal End Thrust Washer	3-7
3-17	Piston Rings	3-7
3-18	Installing Pistons	3-8
3-19	Installing Suction Strainer	3-8
3-20	Piston Dimension (Wear Limits)	3-10
3-21	Compressor Exploded View	3-11

LIST OF TABLES

Table		Page
3-1	Torque Values	3-9
3-2	Wear Limits	3-10

SECTION 1
DESCRIPTION

1.1 INTRODUCTION

This operation and service manual covers the Carrier Transicold Model 05G compressors. These compressors are designed for refrigeration (trailer) or air conditioning (bus & rail) applications. (See Figure l-l) The following table list the special tools for the 05G compressors.

PART NO.	SPECIAL TOOLS
07-00219	Wrench, Compressor Sight Glass
07-00223	Pliers, Compressor Unloader Ring
07-00240-01	Wrench, Spanner (for Housing Mounted Clutch)
07-00241	Rotor Installation Tool (for Housing Mounted Clutch)
07-00242-01	Bearing Retaining Nut Socket (3.5") (Housing Mounted Clutch)
07-00242-02	Bearing Retaining Nut Socket (3") (for Housing Mounted Clutch)
07-00260-00	Acid Test Kit
07-00265-01	Totaltest Kit (Packaae of 1)
07-00266-00	Replacement Tubes for Totaltest Kit
58-00869-00	Filter, Felt (Suction Sock for System Clean Up)

1.2 GENERAL DESCRIPTION

The Model 05G compressors are of the open-drive reciprocating type. A crankshaft, connecting rods, pistons, and reed type valves accomplish vapor compression. Compressor wear is minimized by splash lubrication and by force feed lubrication. There are three types of oil pumps (Vane, Gear and Low Profile Gear) driven directly from the end of the compressor crankshaft. (See Figure 1-3)

CAUTION

The gear oil pump must be set to rotate in the same direction as the crankshaft. (Refer to section 3.4)

The tapered end of the crankshaft, which extends outside the crankcase, is adaptable to a variety of direct drive or belt–driven clutch mechanisms. A mechanical seal prevents refrigerant leakage where the rotating shaft passes through the crankcase.

The compressor is equipped with flanges for connecting suction and discharge service valves. Connections are also provided for pressure gauges and safety cutout switches. Sight glasses installed on both sides of the crankcase, provides a means for checking oil level in the compressor crankcase. A drain plug facilitates draining of oil from the crankcase and an oil fill plug enables addition of oil when necessary. A bottom plate provides access through the bottom of the crankcase for maintenance.

WARNING

Do not operate compressor unless suction and discharge service valves are open.

Capacity of the Model 05G compressor is determined by piston displacement and clearance, suction and discharge valve size, compressor speed, suction and discharge pressure, type of refrigerant, and unloader valves.

1.3 COMPRESSOR REFERENCE DATA

Model	05 G-37CFM	05G–41CFM
Displacement	37CFM	41CFM
No. Cylinders	6	
Bore	50.8 mm (2.00 in)	
Stroke	49.2 mm (1.937 in)	54.36 mm (2.14 in)
Weight	62 kg (137 Ibs)	
SPEED (RPM) FOR OIL PUMP		
Vane	900 to 2200	
Gear	500 to 2200	
Low Profile Gear	500 to 2200	

NOTE

The oils below are suitable for use with evaporator temperatures above –40°F (-40°C).

Approved Oil for REFRIGERATION USE (TRAILER)	
Refrigerant	**Oil**
R-12, R-22, R-500 or R-502	Zerol 150 Synthetic P/N 07-00274

Approved Oil for AIR CONDITIONING USE (BUS AND RAIL)	
Refrigerant	**Oil**
R-12 or R-22	Calumet Refining: R030
	Texaco: WF68
	Witco: 4GS Suniso
R-134a	Castrol Icematic: SW-68

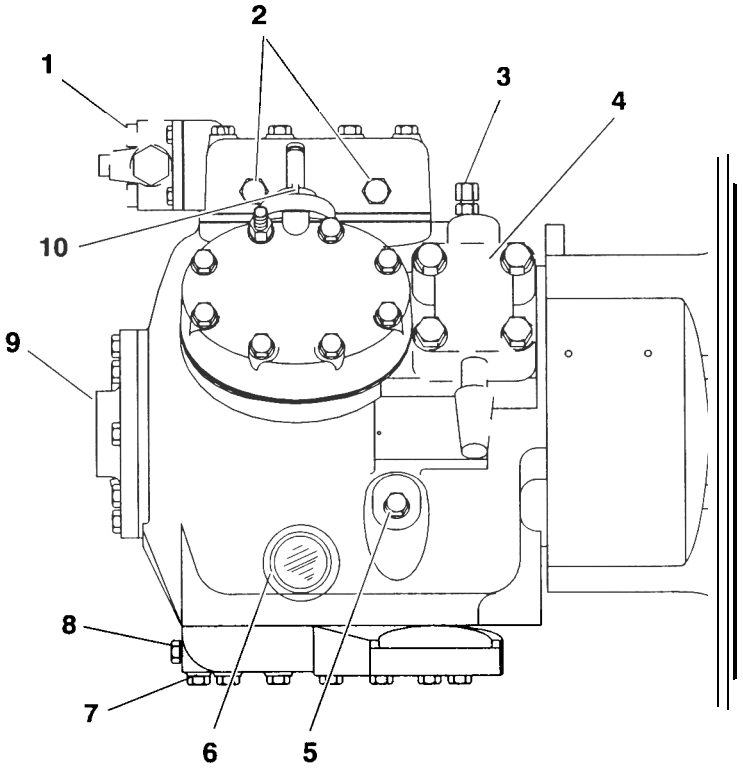

REFRIGERATION COMPRESSOR (TRAILER)

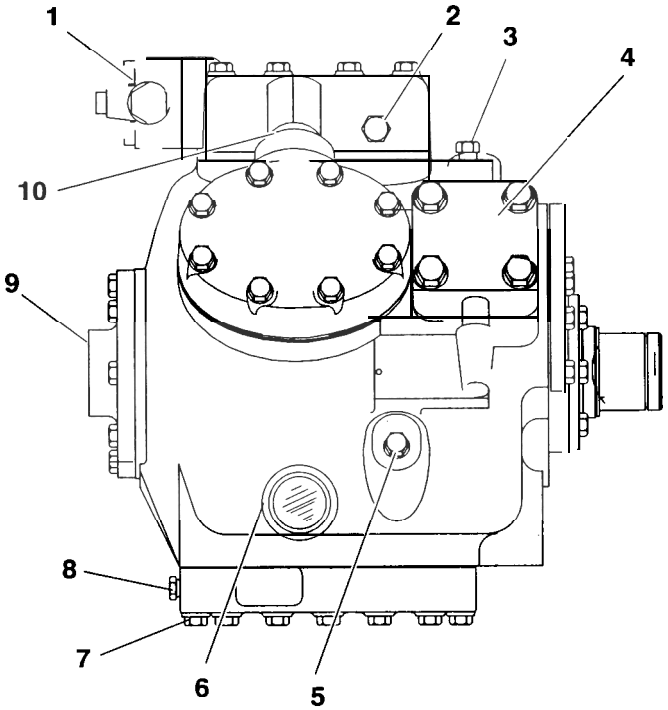

AIR CONDITIONING COMPRESSOR (BUS & RAIL)

1. Discharge Service Valve
2. High Pressure Connection
3. Low Pressure Connection
4. Suction Service Valve
5. Oil Fill Plug
6. Oil Level Sight Glass
7. Bottom Plate
8. Oil Drain Plug
9. Oil Pump (See Figure 1-3)
10. Unloader

Figure 1-1. Model 05G Compressor

1.4 DETAILED DESCRIPTION

1.4.1 SUCTION AND DISCHARGE VALVES

The compressor uses reed type suction and discharge valves made of highest quality steel for long life. The valves operate against hardened integral seats in the valve plate.

The downstroke of the piston admits refrigerant gas through the suction valve, and then compresses this gas on the upstroke, thereby raising it's temperature and pressure. The compressed gas is prevented from recentering the cylinder on it's next downstroke by the compressor discharge valve. (See Figure 1-2)

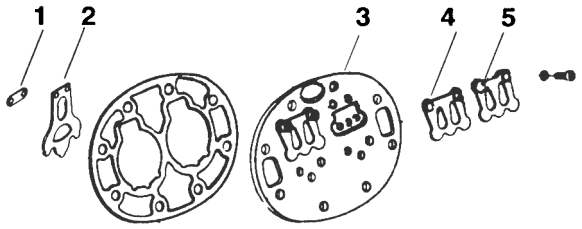

1. Position Spring
2. Suction Valve
3. Valve Plate
4. Discharge Valve
5. Discharge Valve Stop

Figure 1-2. Suction & Discharge Valve

1.4.2 SUCTION & DISCHARGE SERVICE VALVES

The suction and discharge service valves used on the compressor are equipped with mating flanges for connection to flanges on the compressor. These valves are provided with a double seat and a gauge connection, which allows servicing of the compressor and refrigerant lines (See Figure l-l).

Turning the valve stem counterclockwise (all the way out) will *backseat* the valve to open the suction or discharge line to the compressor and close off the gauge connection. In normal operation, the valve is backseated to allow full flow through the valve. The valve should always be backseated when connecting the service manifold gauge lines to the gauge ports.

Turning the valve stem clockwise (all the way forward) will *frontseat* the valve to close off the suction or discharge line to isolate the compressor and open the gauge connection.

To measure suction or discharge pressure, midseat the valve by opening the valve clockwise about 2 turns. With the valve stem midway between frontseated and backseated positions, the suction or discharge line is open to both the compressor and the gauge connection.

1.4.3 LUBRICATION SYSTEM

There are three types of oil pumps (Vane, Gear and Low Profile Gear) driven directly from the end of the compressor crankshaft (See Figure 1-3). Force-feed lubrication of the compressor is accomplished by a oil pump driven directly from the compressor crankshaft. Refrigeration oil is drawn from the compressor crankcase through the oil filter screen and pick up tube to the oil pump located in the bearing head assembly. The crankshaft is drilled to enable the pump to supply oil to the main bearings, connecting rod bearings, and the shaft seal.

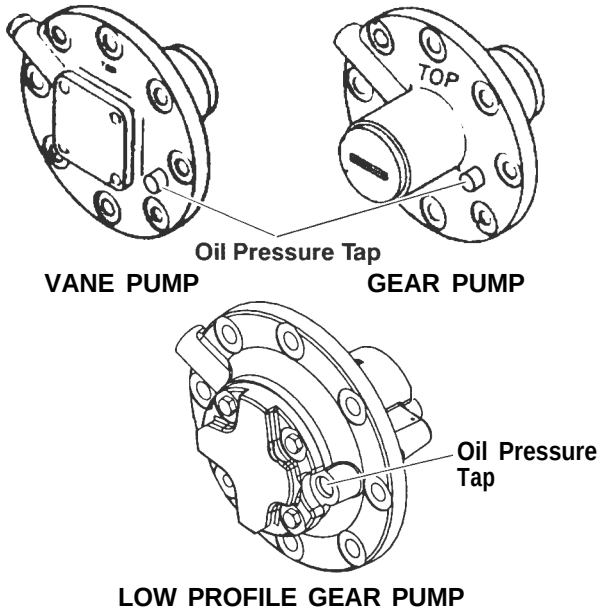

Figure 1-3. Oil Pumps

CAUTION

The Gear oil pump must be set to rotate in the same direction as the crankshaft. (Refer to section 3.4)

The oil flows to the pump end main bearings, connecting rod bearings and seal end main bearings, where the oil path is divided into two directions. The largest quantity flows to the oil relief valve, which regulates oil pressure at 15 to 18 psi (2.09 to 2.30 kg/cm2) above suction pressure. When the oil pressure reaches 15 to 18 psi above suction pressure, the relief valve spring is moved forward allowing oil to return to the crankcase. The remaining oil flows through an orifice and into the shaft seal cavity to provide shaft seal lubrication and cooling. This oil is then returned to the crankcase through an overflow passage.

An additional oil pressure relief valve, built into the Gear and Low Profile Gear Oil Pump, is open at speeds above 400 rpm to relieve a portion of the oil pressure to the crankcase in order to maintain oil pressure below an acceptable maximum. At low speeds, the valve is closed to ensure adequate oil pressure at 400 rpm. At speeds above 1900 rpm, the oil pressure will be 25 to 30 psi (2.8 to 3.1 kg/cm²) above suction pressure.

The crankcase pressure equalization system consists of two oil return check valves and a l/8-inch pressure equalization port between the suction manifold and crankcase. Under normal conditions, check valves are open and allow for oil return to the crankcase. Under flooded start conditions, pressure rises in the crankcase and closes the check valves, preventing excess oil loss. The equalization port allows for release of excessive pressure, that has built up in the crankcase, to the suction manifold; this ensures that the oil loss is kept to a minimum.

1.5 COMPRESSOR UNLOADER

The 6 cylinder 05G compressor can be applied with 2 bank of unloading.

There are two types of compressor unloader systems; the first one is the hot gas bypass and the second is the suction cutoff. They are easily distinguished from each other by observing the bottom side of the compressor cylinder head, it is either blank (Hot gas bypass) or has a cover plate (Suction cutoff).

The two types of compressor unloader systems can be controlled with either a pressure actuated valve or an electrically actuated (solenoid) valve.

1.5.1 HOT GAS BYPASS UNLOADER

The compressor is equipped with an unloader for capacity control. This consists of a self-contained, cylinder head bypass arrangement (See Figure 1-4) which is electronically controlled by the temperature controller.

The capacity controlled cylinder is easily identified by the solenoid which extends from the side of the cylinder head. When the solenoid energizes, the cylinder unloads allowing discharge gas to circulate as shown in Figure 1-5. The unloaded cylinder operates with little or no pressure differential, consuming very little power. A de-energized solenoid reloads the cylinder as shown in Figure 1-6.

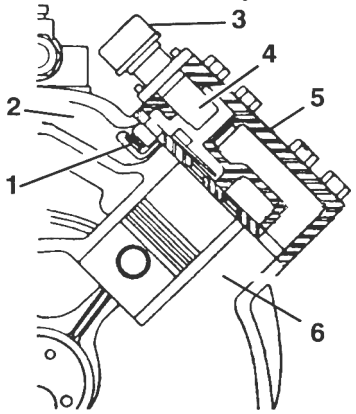

1. Discharge Check Valve
2. Discharge Manifold
3. Solenoid Valve
4. Piston Bypass Control Valve
5. Cylinder Head
6. Suction Manifold

Figure 1-4. Compressor Unloader – Hot Gas Bypass

a. Major Working Parts

1. Solenoid and valve system
2. Spring loaded piston type bypass control valve
3. Spring loaded discharge check valve

b. Unloaded Operation

Pressure from the discharge manifold (Figure 1-5, item 15) passes through the strainer (9) and bleed orifice (8) to the back of the piston bypass valve (7). Unless bled away, this pressure would tend to close the piston (6) against the piston spring (5) pressure.

With the solenoid valve (1) *energi.zed* the solenoid valve stem (2) will *open* the gas bypass port (3).

Refrigerant pressure will be bled to the suction manifold (10) through the opened gas bypass port . A reduction in pressure on the piston bypass valve will take place because the rate of bleed through the gas bypass port is greater than the rate of bleed through the *bleed orifice* (8).

When the pressure behind the piston has been reduced sufficiently, the valve spring will force the piston bypass valve *back*, *opening* the gas bypass from the discharge manifold to the suction manifold.

Discharge pressure in the discharge manifold will close the discharge piston check valve assembly (14) isolating the compressor discharge manifold from the individual cylinder bank manifold.

The *unloaded* cylinder bank will continue to operate *fully unloaded* until the solenoid valve control device is *de-energized* and the gas bypass port is closed.

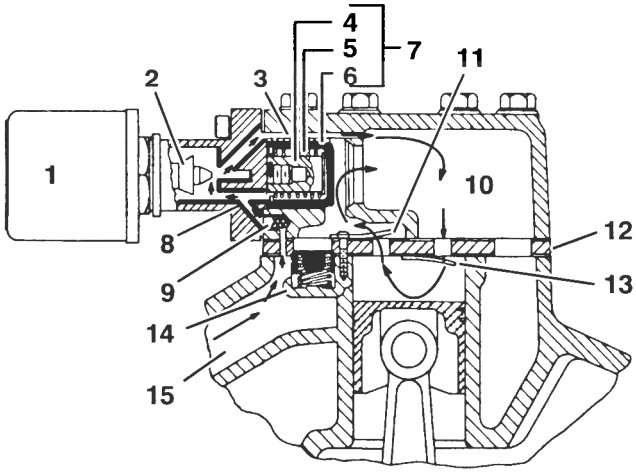

1. Solenoid Valve
2. Valve Stem
3. Gas Bypass Port
4. Spring Guide
5. Spring
6. Piston
7. Piston Bypass Valve
8. Bleed Orifice
9. Strainer
10. Suction Cavity
11. Cylinder Discharge Valve
12. Valve Plate
13. Cylinder Suction Valve
14. Discharge Piston Check Valve Assembly
15. Discharge Manifold

Figure 1-5. Compressor CyIinder Head Unloaded – Hot Gas Bypass

c. Loaded Operation

Discharge pressure bleeds from the discharge manifold (Figure 1-6, item 15) through the strainer (9) and (8) bleed orifice to the solenoid valve stem (2) chamber and the back of the piston bypass valve (7).

With the solenoid valve (1) *de-energized* the solenoid valve stem will close the gas bypass port (3).

Refrigerant pressure will overcome the bypass valve spring (5) tension and force the piston (6) *forward closing* the gas bypass from the discharge manifold to the suction manifold (10).

Cylinder discharge pressure will force open the discharge piston check valve assembly (14). Refrigerant gas will pass into the compressor discharge manifold.

The loaded cylinder bank will continue to operate fully loaded until the solenoid valve control device is energized and the gas bypass port is opened.

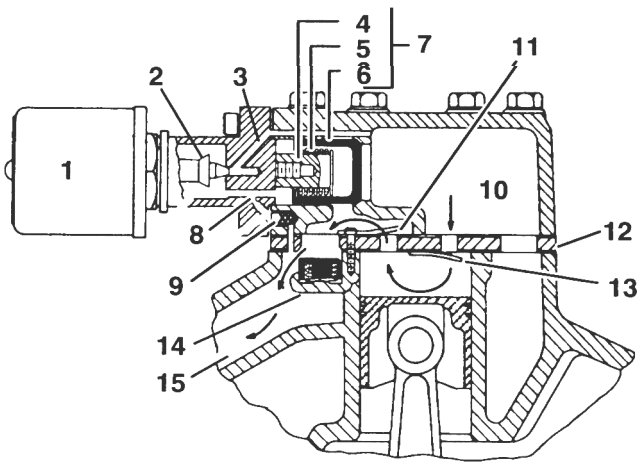

1. Solenoid Valve
2. Valve Stem
3. Gas Bypass Port
4. Spring Guide
5. Spring
6. Piston
7. Piston Bypass Valve
8. Bleed Orifice
9. Strainer
10. Suction Cavity
11. Cvlinder Discharge valve
12. Valve Plate
13. Cylinder Suction Valve
14. Discharge Piston Check Valve Assembly
15. Discharge Manifold

Figure 1-6. Compressor Cylinder Head Loaded – Hot Gas Bypass

1.5.2 SUCTION CUTOFF UNLOADER

The compressor is equipped with unloaders for capacity control. This consists of a self-contained, suction cut-off arrangement which is electronically controlled by the temperature controller.

The capacity controlled cylinders are easily identified by the solenoid which extends from the side of the cylinder head. When the solenoid energizes, cylinders unload, preventing suction gas from being drawn into the cylinder (See Figure 1-7). The unloaded cylinders operate with little or no pressure differential, consuming very little power. A de-energized solenoid reloads the cylinders as shown in Figure 1-8.

a. Major Working Parts

1. Solenoid and valve system
2. Unloader piston assembly
3. Spring and cover plate

b. Unloaded Operation

When the unloader valve solenoid energizes, the capacity control valve port opens (item 3, Figure 1-7). This allows the discharge gas behind the unloader piston assembly (item 4) to vent back to the suction side. The unloader valve spring (item 7) at this point, can move the unloader valve body to the left, blocking the unloader suction port. The cylinder bank is now isolated from the compressor suction manifold to unload these two cylinders. No refrigerant is allowed into the cylinders and no compression takes place.

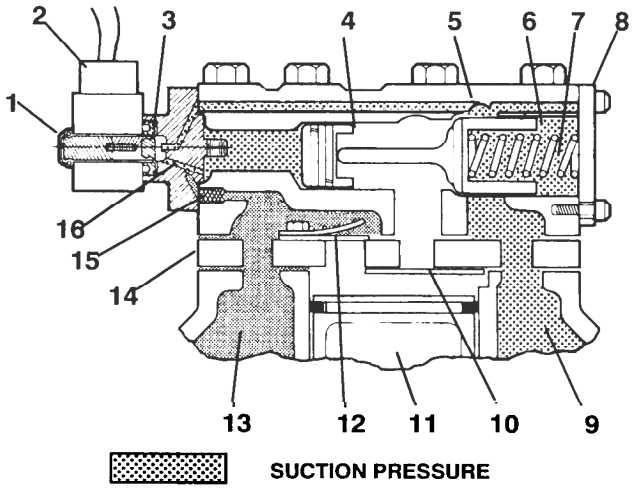

1. Solenoid Valve
2. Coil
3. Capacity Control Valve (Open)
4. Unloader Piston
5. Cylinder Head
6. Valve Body
7. Valve Spring
8. Cover Plate
9. Suction Manifold
10. Suction Valve
11. Piston
12. Discharge Valve
13. Discharge Manifold
14. Valve Plate
15. Strainer
16. Bleed Orifice

Figure 1-7. Compressor Cylinder Head (Unloaded) – Suction Cutoff

c. Loaded Operation

When the unloader valve solenoid de-energizes, the capacity control valve port closes (item 3, Figure 1-8). This allows discharge pressure to build-up behind the unloader piston assembly. The high pressure will compress the unloader valve spring, opening the unloader suction port. Suction gas can now be drawn into the cylinders, running the bank fully loaded.

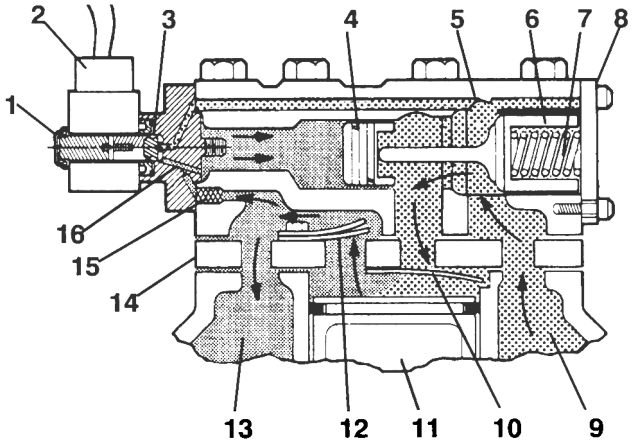

SUCTION PRESSURE

DISCHARGE PRESSURE

1. Solenoid Valve
2. Coil
3. Capacity Control Valve (Closed)
4. Unloader Piston
5. Unloader Head
6. Valve Body
7. Valve Spring
8. Cover Plate
9. Suction Manifold
10. Suction Valve
11. Piston
12. Discharge Valve
13. Discharge Manifold
14. Valve Plate
15. Strainer
16. Bleed Orifice

Figure 1-8. Compressor Cylinder Head (Loaded) – Suction Cutoff

1.5.3 PRESSURE-OPERATED UNLOADERS

There are two types of compressor unloader systems; the first one is the hot gas bypass and the second is the suction cutoff. They are easily distinguished from each other by observing the bottom side of the compressor cylinder head, it is either blank (Hot gas bypass) or has a cover plate (Suction cutoff).

The two types of compressor unloader systems can be controlled with either a pressure actuated valve or an electrically actuated (solenoid) valve.

The pressure–operated unloaders are controlled by suction pressure and actuated by discharge pressure. The unloader valve controls two cylinders. On startup, controlled cylinders do not load up until differential between suction and discharge pressure is 10 psi (1.7 kg/cm²).

During *loaded operation*, when suction pressure is above the valve control point, the poppet valve will close. Discharge gas bleeds into the valve chamber; the pressure closes the bypass piston; and the cylinder bank loads up. Discharge gas pressure forces the check valve open, permitting gas to enter the discharge manifold. See Figure 1-9.

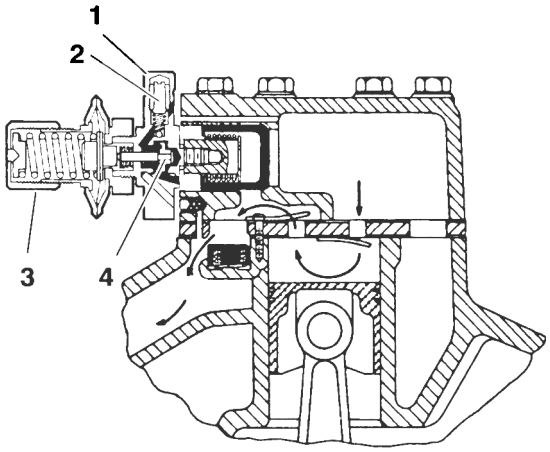

1. Sealing Cap
2. Pressure Differential Adjustment Screw
3. Control Set Point Adjustment Nut
4. Poppet Valve

Figure 1-9. Pressure-Operated Unloader Loaded Operation

During *unloaded operation*, when suction pressure drops below the valve control point, the poppet valve will open. Discharge gas bleeds from behind the bypass piston to the suction manifold. The bypass piston opens, discharge gas is recirculated back to the suction manifold and the cylinder bank is unloaded. Reduction in discharge pressure causes the check valve to close, isolating the cylinder bank from the discharge manifold. See Figure 1-10.

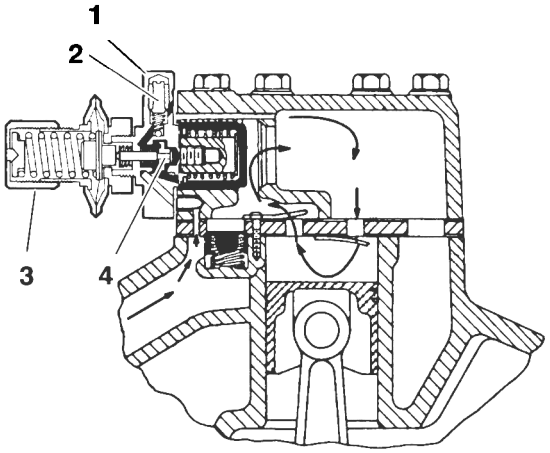

1. Sealing Cap
2. Pressure Differential Adjustment Screw
3. Control Set Point Adjustment Nut
4. Poppet Valve

Figure 1-10. Pressure-Operated Unloaded – Unloaded Operation

SECTION 2

COMPRESSOR REPLACEMENT

2.1 COMPRESSOR REMOVAL

Refer to the operation and service manual covering the equipment in which the compressor is installed for specific removal instructions. A general removal procedure is given below.

a. If compressor is completely inoperative, frontseat the suction and discharge service valves to trap the refrigerant in the unit. If the compressor will operate, pump down the unit; then, frontseat the suction and discharge service valves.

b. Ensure power source is removed from any controls installed on the compressor.

c. Remove refrigerant using a refrigerant recove~ system.

d. Disconnect refrigerant lines at service valve flange connections on the compressor; retain hardware.

e. Remove any components necessary to gain access to the compressor or to enable removal.

f. Disconnect the drive mechanism at the compressor.

g. Remove mounting hardware and remove compressor from unit.

h. If compressor is to be repaired, refer to section 3 for repair procedures. if a replacement compressor is to be installed, refer to section 2.2 for replacement procedures.

2.2 COMPRESSOR REPLACEMENT

Consult the unit service parts list for the correct replacement.

Service replacement compressors are furnished without suction and discharge service valves and unloader valves. The service valves are normally retained on the unit to isolate the refrigerant lines during compressor replacement. Blank-off pads are installed on the service replacement compressor valve flanges. These pads must be removed prior to installing the compressor. If the defective compressor is to be returned for overhaul or repair, install the pads on the compressor for sealing purposes during shipment.

Service replacement compressors are furnished with cylinder head bypass piston plugs installed on the unloader flanges in lieu of the unloader valves. The unloaders (if used) must be removed from the defective compressor and transferred to the replacement compressor prior to installation. Refer to section 2.2.1.

If the defective compressor is to be returned for overhaul or repair, install the plugs on the compressor for sealing purposes during shipment.

2.2.1 INSTALLING COMPRESSOR UNLOADERS

a. Remove the three socket head capscrews holding piston plug to cylinder head of the replacement compressor. See Figure 2-1.

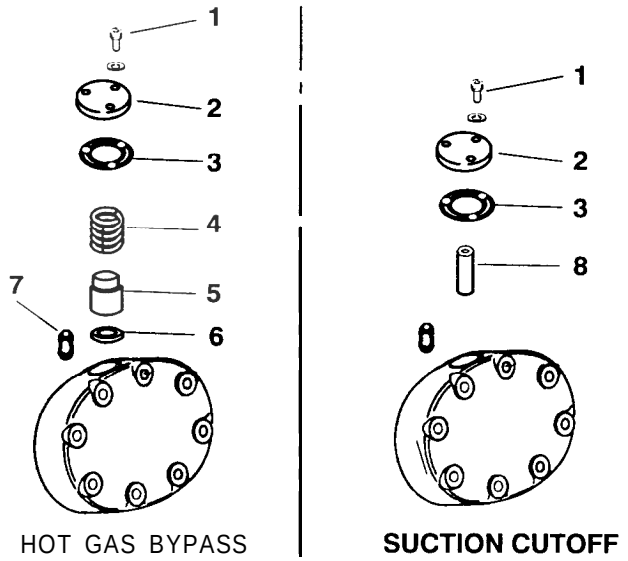

1. Capscrews
2. Flange Cover
3. Gasket
4. Spring
5. Bypass Piston Plug
6. Seat Ring
7. Strainer
8. Sleeve Plug

Figure 2-1. Removal of Piston Plug

b. Remove flange cover, gasket, spring, bypass piston plug, and seat ring. A tapped hole is provided in piston plug for use with a jackscrew to enable removal of the plug. One of the socket head capscrews maybe used as a jackscrew.

c. Remove the three socket head capscrews holding unloader in the cylinder head of the defective compressor; remove the unloader and retain the capscrews.

NOTE

Capscrews removed from the bypass piston plug flange cover are not interchangeable with capacity control unloader valve capscrews. When installing the unloaders, be sure to use the unloader capscrews.

d. Using a new gasket and unloader ring pliers (P/N 07-00223), install the unloaders in the cylinder heads of the replacement compressor. Refer to Table 3-1, for required torque values.

e. If the defective compressor is to be returned for overhaul or repair, install the bypass piston plug, spring, seat ring and flange cover onto the cylinder heads.

2.2.2 INSTALLING COMPRESSOR

WARNING

Midseat service valves or by other means relieve pressure in replacement compressor before removing plugs.

CAUTION

The high capacity oil pump must be set to rotate in the same direction as the crankshaft. (Refer to Section 3.4)

a. Install the compressor by reversing the procedure of section 2.1. Install new locknuts on compressor mounting bolts and new gaskets on suction and discharge service valves.

b. Check oil level in sight glass (See Figure 2-2). If necessary, add or remove oil.

c. Leak test, evacuate, and dehydrate the compressor.

d. Fully backseat suction and discharge service valves.

e. Run the compressor and check for leaks and noncondensibles in the refrigerant system.

f. Check refrigerant level.

g. Recheck compressor oil level.

h. Check operation of compressor unloaders (if installed).

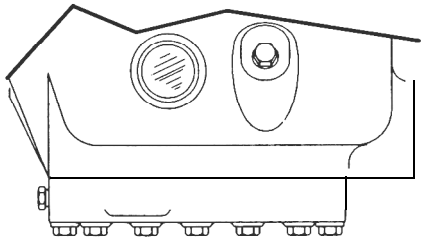

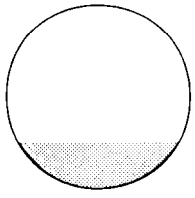

OLD SIGHT GLASS LOCATION and PROPER LEVEL

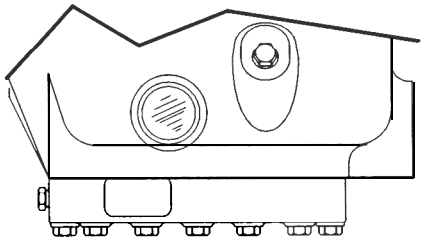

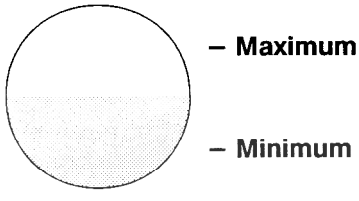

NEW SIGHT GLASS LOCATION and PROPER LEVEL

Figure 2-2. Oil Level in Sight Glass

SECTION 3

COMPRESSOR MAINTENANCE

3.1 INTRODUCTION

Prior to disassembly of the compressor, oil must first be drained from the crankcase. Place the compressor in a position where it will be convenient to drain the oil. Remove the oil fill plug to vent the crankcase. Loosen the drain plug and allow the oil to drain out slowly.

If dismantled parts are to be left overnight or longer, dip them in clean compressor oil (to prevent rusting) and store in protected area.

Refer to Table 3-1 for torque values for tightening bolts.

3.2 INSPECTION AND PREPARATION FOR REASSEMBLY

a. Clean all parts with an approved solvent. Use a stiff bristle brush to remove dirt from grooves and crevices.

b. Inspect all parts for wear and overall condition. Replace any defective or excessively worn parts.

c. Inspect suction and discharge valve seats (on valve plate).

d. If unloaders are installed, inspect operation of unloader.

e. After cleaning, ensure all moving parts are coated with compressor oil before reassembly.

f. Use only new gaskets during reassembly. Ensure all gaskets (includes cylinder head, valve plate, and unloader or bypass plug gaskets) are installed dry.

3.3 CYLINDER HEAD AND VALVE PLATE

a. Disassembly

WARNING

Do not unscrew capscrews all the way before breaking seal. Entrapped pressure could result in injury.

1. Loosen cylinder head capscrews. If the head is stuck, tap it lightly with a wooden or lead mallet to free it. Be careful not to drop the head or damage the gasket sealing surface. Remove cylinder head capscrews and gasket. (See Figure 3-1)

2. Remove the discharge valve capscrews, lock washers, stops, and valves.

3. Free the valve plates from the cylinder deck by using the discharge valve capscrews, without washers, as jackscrews through the outermost tapped holes in the valve plate after the valve stops and valves have been removed. Remove the valve plate gasket.

4. Discard valves and gaskets. Use only new valves and gaskets when assembling cylinder head and valve plate assemblies.

b. Reassembly

Some 05G compressors for refrigeration use only may have “canted” valve plates. The “canted valve” design allows a reduction in the distance between the discharge valve and the top of the piston. When piston is at TDC the volume of the compression chamber is smaller, contributing to increased compressor efficiency.

1. Install only new valves and gaskets, and do not interchange valves.

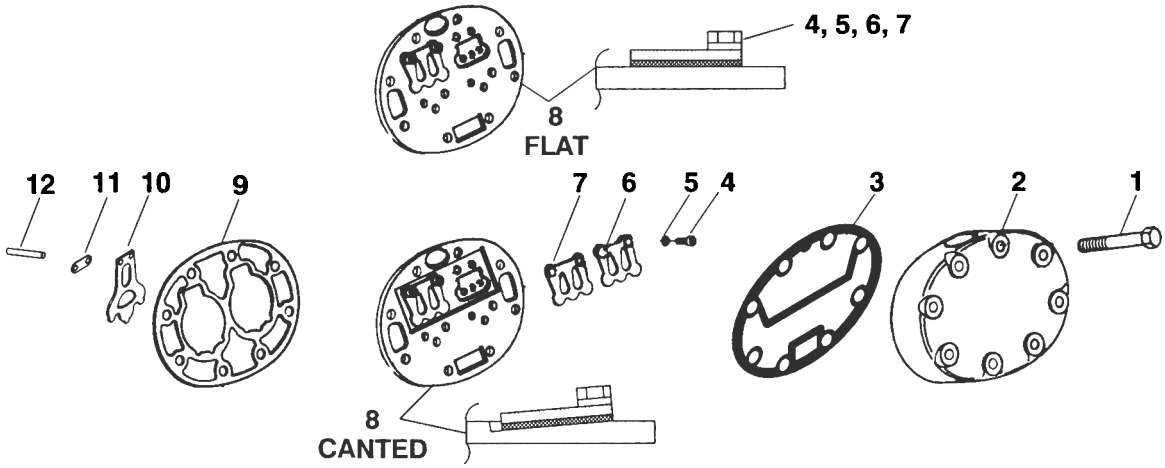

1. Capscrew
2. Cylinder Head
3. Cylinder Head Gasket
4. Capscrew
5. Lockwasher
6. Discharge Valve Stop
7. Discharge Valve
8. Valve Plate
9. Valve Plate Gasket
10. Suction Valve
11. Position Spring
12. Dowel Pin

Figure 3-1. Cylinder Head & Valve Plate

2. Install suction valve positioning spring on dowel pins. Assemble positioning spring springs with spring ends bearing against cylinder deck. The spring will bow outward in the middle. (See Figure 3-2)

3. Place suction valve on dowel pins, over the positioning spring.

4. Place valve plate and new valve plate gasket on cylinder deck ensuring that the valve plate is properly positioned on the four dowel pins.

5. Using a small screwdriver, operate the suction valves to ensure that the valve tips are not being held by the valve plate gasket. (See Figure 3-3)

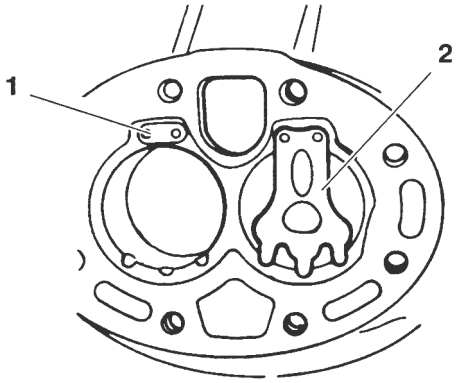

1. Positioning Spring
2. Suction Valve

Figure 3-2. Installing Suction Valves

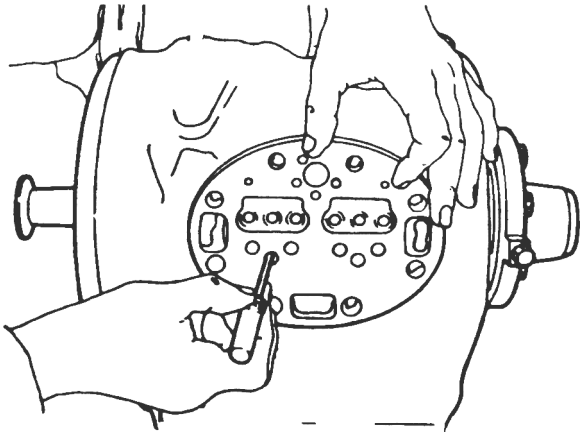

Figure 3-3. Checking Suction Valve

6. Install discharge valve and discharge valve stop with capscrews and lock washers.

7. Install capscrews, cylinder head and new cylinder head gasket with flat side to valve plate, ensuring that the gasket and cylinder head are properly positioned on the valve plate. Torque the capscrews, in a diagonal pattern, to a value shown in Table 3-1.

3.4 OIL PUMP AND BEARING HEAD

There are three types of oil pumps (Vane, Gear and Low Profile Gear) driven directly from the end of the compressor crankshaft.

3.4.1 LOW PROFILE GEAR PUMP

a. Removal

Remove eight capscrews and remove oil pump bearing head assembly, gasket and thrust washer. (See Figure-3-4.)

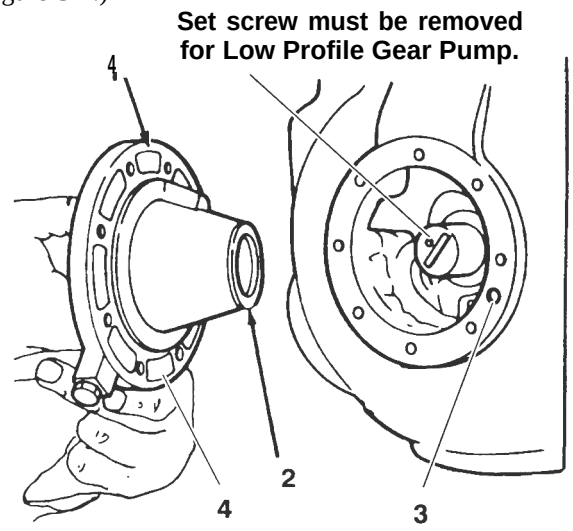

1. Oil Pump & Bearing Head
2. Thrust Washer
3. Oil Pickup Tube
4. Oil Inlet Port

Figure 3-4. Oil Pump and Bearing Head Assembly

b. Disassembly, & Inspection

If it was determined that the oil pump was not operating properly, the entire oil pump and bearing head assembly must be replaced. Replacement parts for the pump are not available. However, in the event the pump requires inspection or cleaning, disassembly and reassembly by referring to Figure 3-5. Clean all parts; coat all moving parts with compressor oil before proceeding with reassembly.

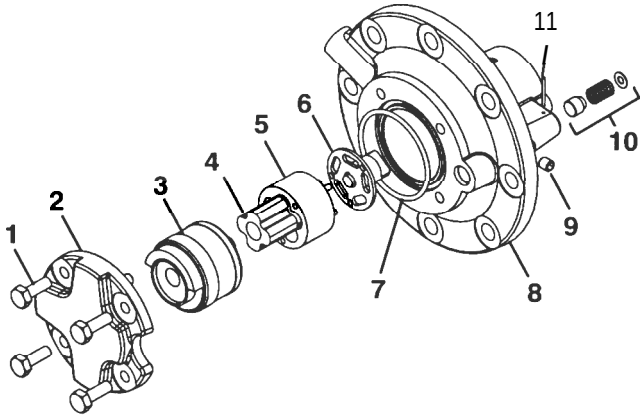

1. Capscrews
2. Cover
3. Reversing Assembly
4. Pinion
5. Gear
6. Drive
7. O-Ring
8. Oil Pump & Bearing
9. Set Screw
10. Relief Valve
11. Pin

Figure 3-5. Low Profile Gear Oil Pump

c. Reassembly

1. Install the pump end thrust washer on the two dowel pins located on the bearing head. (See Figure 3-4.)

CAUTION

Ensure that thrust washer does not fall off dowel pins while installing oil pump.

2. Install the bearing head assembly with a new gasket on the compressor crankshaft. Carefully push oil pump on by hand ensuring that the thrust washer remains on the dowel pins, the tang on the end of the drive segment engages the slot in the crankshaft, and the oil inlet port on the pump is aligned with the oil pickup tube in the crankcase. The pump should mount flush with the crankcase and should be oriented as shown in Figure 1-1.

3. Align the gasket and install the eight capscrews in the mounting flange. Refer to Table 3-1, for applicable torque values.

3.4.3 VANE PUMP

a. Removal

1. Remove four capscrews, gaskets and remove oil pump cover; this will free the oil feed guide retaining spring, cover gasket, and the oil feed guide. (See Figure 3-7.)

2. Remove the two drive segment capscrews and lock washer and remove the drive segment.

3. Remove eight capscrews and remove oil pump bearing head assembly and gasket. (See Figure 3-4.)

b. Disassembly, & Inspection

If it was determined that the oil pump was not operating properly, it is recommended that the entire oil pump and bearing head assembly be replaced to ensure trouble-free operation. However, if the cause of oil pump failure can be determined in the field and replacement parts for the pump are available, the pump can be repaired. The pump end bearing is integral with the bearing head and is not replaceable.

1. Remove the plunger snap ring with snap ring pliers. As each snap ring is removed, the spring guide, plunger spring, and plunger may be removed from the cylinder in the bearing head. Identify parts to ensure replacement in same cylinder.

2. Push the pump rotor out of the bearing head by forcing against the rotor. Apply force from the bearing side and remove rotor from the opposite side. The pump rotor retaining ring will come out with the rotor.

3. Clean all parts; coat all moving parts with compressor oil before proceeding with reassembly.

4. Insert the pump rotor into the bearing head from the side opposite the bearing, with the rotor retaining ring in place on the rotor. Install the rotor retaining ring with the chamfered edge in. Compress the retaining ring (close gap) in order to fit the rotor and ring into their proper positions.

5. Insert one of the plungers into a cylinder in the bearing head (flat end in); then insert the plunger spring and spring guide. Insert retaining ring with ring pliers. Force the spring guide down to compress the plunger spring and to allow the retaining ring to fit into its locking groove. Follow the same procedure to reassemble the other plunger spring, guide and snap ring in its plunger cylinder.

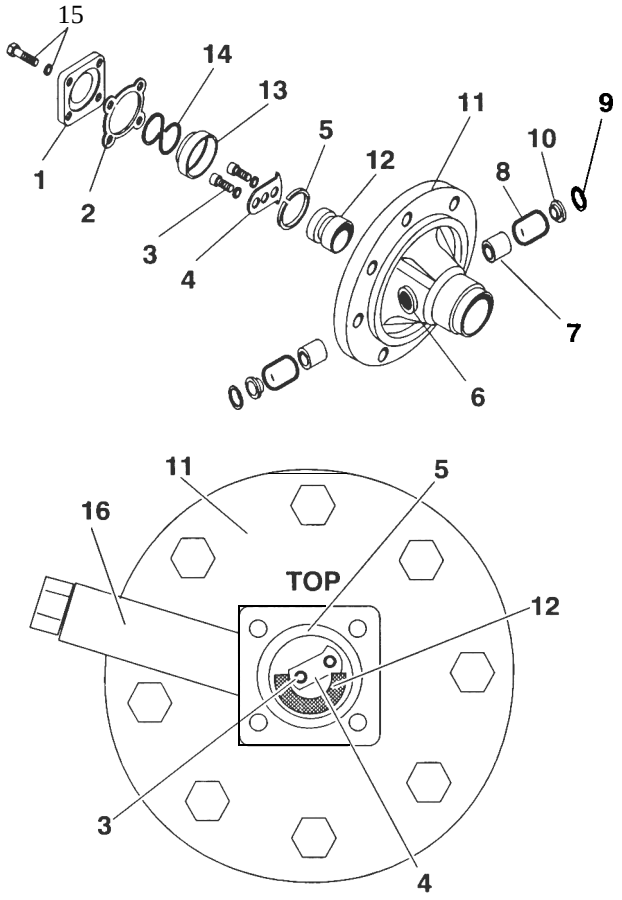

1. Oil Pump Cover
2. Cover Gasket
3. Capscrews and Lockwashers
4. Oil Pump Drive
5. Rotor Retaining Ring
6. Pump Vane Cylinder
7. Pump Vane
8. Vane Spring
9. Retaining Ring
10. Spring Guide
11. Bearing Head
12. Pump Rotor
13. Oil Feed Guide
14. Retainer Spring
15. Capscrews and Washers
16. Oil Inlet Passage

Figure 3-7. Vane Oil Pump

c. Reassembly

1. Install the bearing head assembly with a new gasket on the compressor crankshaft. Carefully push oil pump on by hand ensuring that the bearing head mounts flush to the crankcase body. The top of the bearing head is marked on the mounting flange.

2. Align the gasket and install the eight capscrews in the mounting flange. Refer to Table 3-1, for applicable torque values.

3. Install the drive segment with the two capscrews and lock washer.

4. Insert the oil feed guide with the large diameter in. Insert the guide retaining spring so that it fits over the smaller diameter of the feed guide. The pump cover can now be installed.

5. Place the pump cover, with a new gasket, over the guide retaining spring and compress the spring to enable installation of the cover capscrews.

3.5 SHAFT SEAL

a. Disassembly

1. Remove 6 capscrews, remove shaft seal cover or clutch mounting hub and carbon washer. (See Figure 3-8)

2. Tap seal end of crankshaft to loosen seal grip on shaft. Using two long screwdrivers, pry out the shaft seal but do not damage gasket surface. (See Figure 3-9)

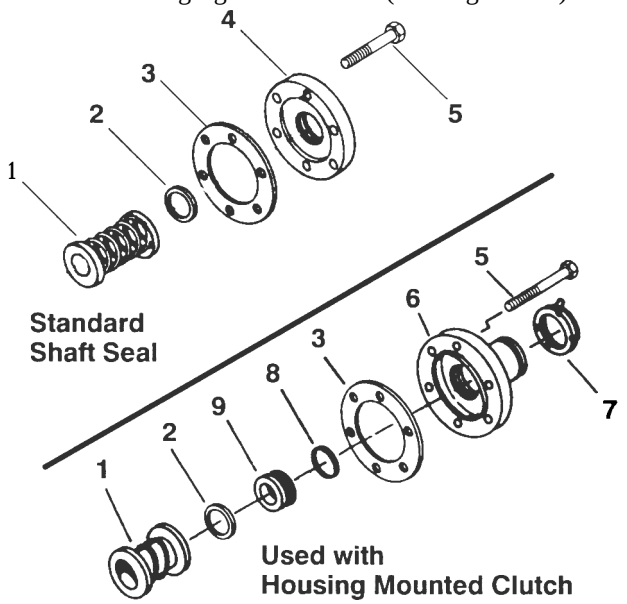

1. Shaft Seal
2. Carbon Ring
3. Gasket
4. Seal Plate
5. Hex Head Screw
6. Clutch Mounting Hub
7. Snap Ring or Nut
8. O-Ring
9. Wear Ring

Figure 3-8. Shaft Seal

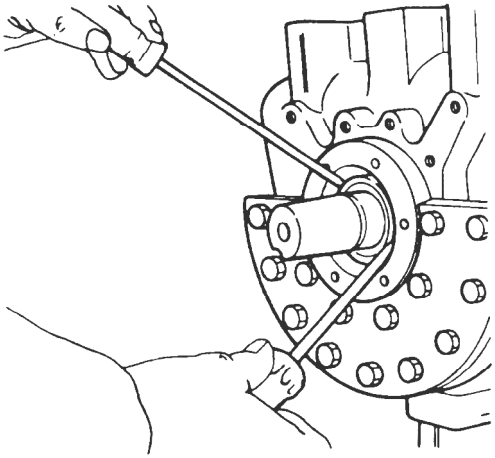

Figure 3-9. Shaft Seal Removal

b. Reassembly

1. Install new shaft seal assembly, cover gasket, and cover plate only. Never install a used seal assembly or gasket. A new carbon washer should never be installed in a used cover plate. When installing the seal assembly, use care not to damage carbon washer or seal seat.

2. Remove new carbon washer from new seal assembly. Lubricate shaft and neoprene seal bellows where it contacts the shaft. Slide seal assembly onto shaft until neoprene bellows start to grip the shaft.

3. Install the OLD carbon washer in the new seal seat. Install two capscrews in opposite sides of the old cover plate. Draw up capscrews evenly to properly position new seal assembly against shoulder on shaft. Remove capscrews and old carbon washer and cover plate.

4. Lubricate new carbon washer and carbon washer seal seat with refrigerant oil. Install new carbon washer in seal seat, taking care not to damage the carbon washer or the seat. Ensure that notches in carbon washer are aligned with two small knurls inside the seal seat. Install the new cover plate and gasket. Draw capscrews down evenly to prevent damage to carbon washer.

NOTE

Do not touch carbon washer sealing surface with your fingers.

3.6 COMPRESSOR RUNNING GEAR REMOVAL

In order to disassemble Piston, Rod and Rings, first the cylinder head, oil pump and shaft seal must be disassembled (Refer to sections 3.3,3.4 and 3.5).

a. Bottom Plate, Strainer, and Connecting Rod Caps

1. Turn the compressor over, bottom side up, and remove the bottom plate. (See Figure 3-10) Scrape off gasket.

2. Remove the oil strainer,

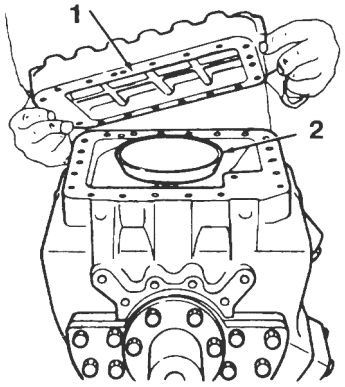

1. Bottom Plate
2. Oil Strainer

Figure 3-10. Bottom Plate Removal

3. Match mark each connecting rod cap and connecting rod for correct reassembly. Remove the capscrews, flat washers and connecting rod caps. It is recommended that the capscrews and flat washers be discarded and new capscrews (special) and flat washers be installed during compressor reassembly. (See Figure 3-11)

4. Push the piston rods down so that the piston ring extend below the cvlinders. Remove and discard piston rings. Use only new rings when reassembling the compressor. (See Figure 3-12.)

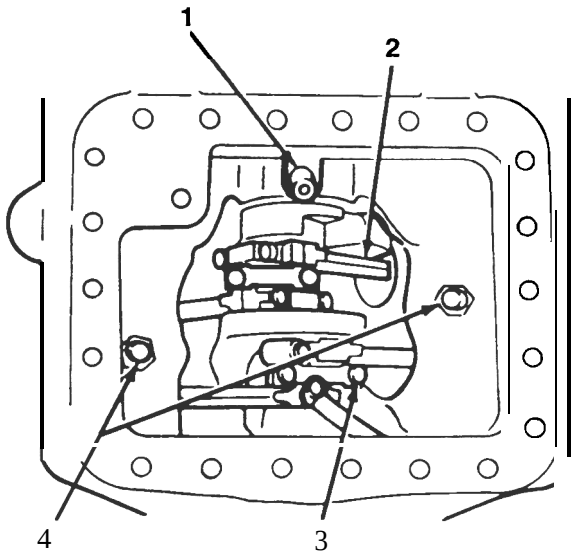

1. Oil Pressure Relief Valve
2. Connecting Rod and Cap
3. Capscrew
4. Check Valves

Figure 3-11. Bottom Plate and Oil Strainer Removed

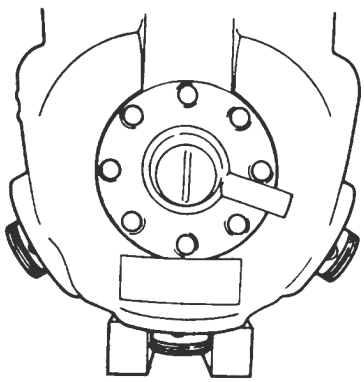

Figure 3-12. Piston Rings Removed

b. Crankshaft and Seal End Thrust Washer

CAUTION

Do not allow crankshaft to drop on connecting rods inside the crankcase when removing the crankshaft.

1. Push piston rod assemblies out of the way and remove crankshaft and seal end thrust washer.

2. Remove and check operation of oil return check valves (See Figure 3-11). The check valves are free floating devices and can easily be checked visually.

3. Remove and check oil pressure relief valve (See Figure 3-11). The oil pressure relief valve is a spring loaded device which can be checked by using a small piece of stiff wire to ensure that the spring can be depressed.

4. Remove piston rod assemblies.

c. Pistons, Rods, and Rings

1. Piston and pin, and connecting rod and rod cap are matched sets and must not be interchanged. That is, if either the piston or piston pin is to be replaced, you must replace both of them. Likewise, if a connecting rod or rod cap must be replaced, both must be replaced.

2. Match mark and disassembly pistons, pins, connecting rods, and caps. (See Figure 3-13)

3. Check wear dimensions of disassembled parts to determine if they are worn beyond limits given in Table 3-2.

4. If parts are worn beyond limits, replace them in matched sets as specified above.

5. Coat piston pins with compressor oil and reassembly pistons, pins, and connecting rods in matched sets.

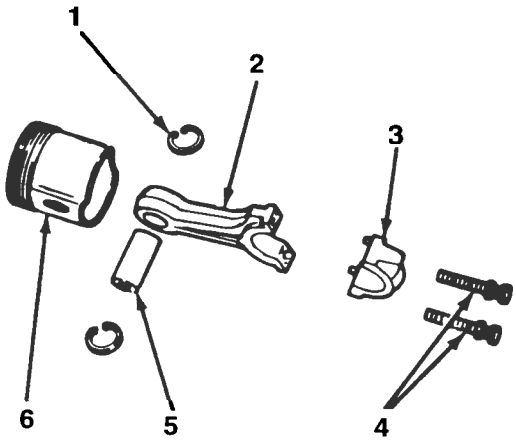

1. Lock Ring
2. Connecting Rod
3. Connecting Rod and Cap
4. Capscrew
5. Piston Pin
6. Piston

Figure 3-13. Connecting Rod, Piston, and Pin

d. Seal End Main Bearings

1. Inspect seal end main bearings. Check wear dimensions to determine if they are worn beyond limits given in Table 3-2.

2. If worn beyond limits remove seal end main bearings.

3.7 COMPRESSOR RUNNING GEAR REASSEMBLY

a. Seal End Main Bearings

1. When installing new seal end main bearings the oil groove is on top of the compressor with V grooves pointing to each other. When installed, there must be a 5/16 inch (7.93 mm) gap between the two bearings (See Figure 3-14).

2. Line boring seal end main bearings.

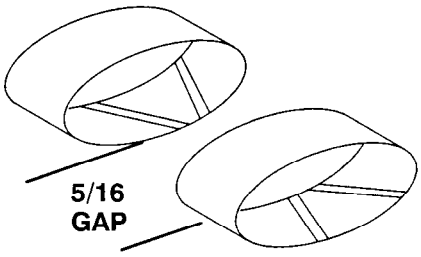

Figure 3-14. Seal End Main Bearings

b . Pistons, Rods, and Rings

Prior to installing new piston rings, it is necessary to break the hard glazed surface of the cylinder in order to reduce the wearing-in period of the new rings. Break the glaze by honing lightly in an up and down rotating motion. Clean thoroughly after breaking glaze.

Some 05G compressors for refrigeration use only may have contoured pistons (See Figure 3-15). When installing contoured pistons into compressor, check suction valve and contoured piston are in the same orientation.



Figure 3-15. Contoured Piston

1. The gap between the ends of the piston rings can be checked with a feeler gauge by inserting the ring into the piston bore about one inch below the top of the bore. Align the ring in the bore by pushing it slightly with a piston. The maximum and minimum allowable ring gaps are shown in Table 3-2.

2. Install the piston and rod assemblies up through the bottom of the crankcase and into the cylinders. Allow pistons to extend beyond the top of the cylinder to enable installation of piston rings. Pistons must be installed so that the chamfer, on the connecting rod, faces toward the crankshaft journals. Center rods on each crankshaft throw may be installed in either direction. (See Figure 3-16)

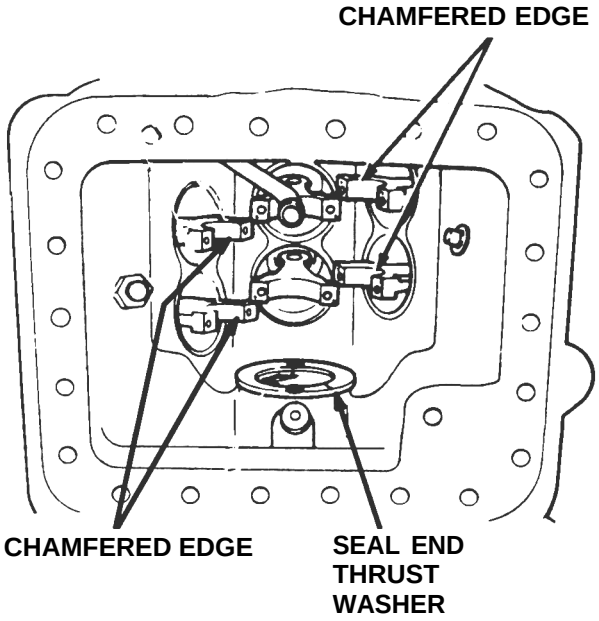

Figure 3-16. Installing Piston Rod Assemblies and Seal End Thrust Washer

3. Depending on date of manufacture, the compressor may be fitted with double or single ring pistons. Double ring and single ring pistons may be installed in the compressor, as long as matched pistons are used on each bank.

4. Old double ring pistons (with wider lower ring groove), the oil ring is installed in the groove nearest the bottom and the compression ring in the groove nearest the top. The oil ring is notched on the outside circumference. This notch must be installed towards the bottom. (See Figure 3-17)

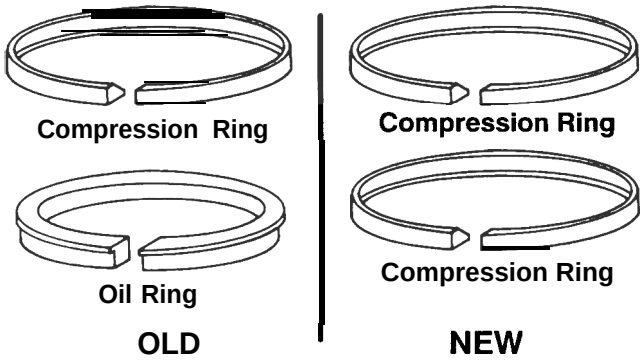

Figure 3-17. Piston Rings

5. The compression ring is chamfered on the inside circumference. This ring is installed with the chamfer towards the top. If using a double ring piston, stagger the ring end gaps so they are not aligned.

6. Measure side clearance between ring and ring groove in piston. Maximum dimensions are provided in Table 3-2.

c. Crankshaft and Seal End Thrust Washer

1. Two brass thrust washers are used. The pump end thrust washer is positioned on two dowel pins located on the bearing head and is installed with the oil pump and bearing head assembly. The seal end thrust washer is positioned just ahead of the seal end main bearing on two dowel pins installed in the crankcase. Both thrust washers should be inspected for wear and scoring before reassembly (Refer to Table 3-2).

2. Install the seal end thrust washer on the two dowel pins. (See Figure 3-16) Ensure piston rods are pushed out of the way and install the crankshaft.

CAUTION

Do not allow crankshaft to drop on connecting rods inside the crankcase when installing the crankshaft.

d. Bottom Plate, Strainer, and Connecting Rod Caps

1. Do not tap piston with hammer if rings are caught at entrance to the cylinder. Using a ring compressor, squeeze rings sufficiently to allow piston to be pushed down into the cylinder. Ensure that ring ends are staggered so that the gaps are not aligned, and lightly tap piston down into the cylinder. (See Figure 3-18) The ring compressor can be easily fabricated from a piece of sheet metal.

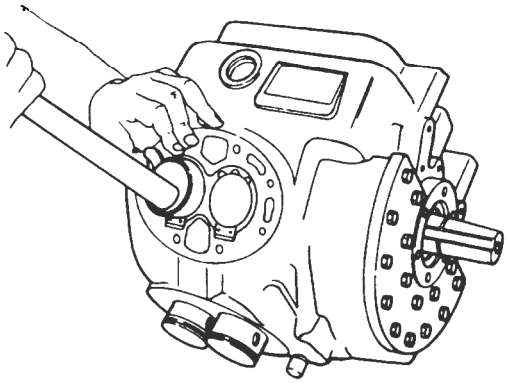

Figure 3-18. Installing Pistons

2. Install connecting rod caps on connecting rods using new capscrews (special) and flat washers. Reuse of the old capscrews is not recommended. Ensure that the caps are installed on the dowel pins. Torque capscrews to torque value shown in Table 3-1. Ensure freedom of movement of crankshaft after capscrews are torqued on each rod cap.

3. Check operation and reinstall check valves and relief valve. (See Figure 3-11). The check valves are free-floating devices and can easily be checked visually. The relief valve is a spring-loaded device which can be checked by using a small piece of stiff wire to ensure that the spring mechanism can be depressed.

4. Clean and reinstall the oil strainer.

5. Using a new gasket, install the bottom cover plate. See figure 1-1 for relative location of compressor mounting flanges. Torque cover capscrews, in a diagonal pattern, to the torque value shown in Table 3-1.

6. Reassembly the cylinder head, oil pump and shaft seal (Refer to sections 3.3,3.4 and 3.5).

3.8 SUCTION STRAINER

NOTE

Suction strainer has been preformed to fit into suction cavity.

Remove and clean the suction strainer. (See Figure 3-19) Check it for damage. If it is damaged, replace suction strainer. Install suction strainer and suction service valve using a new gasket.

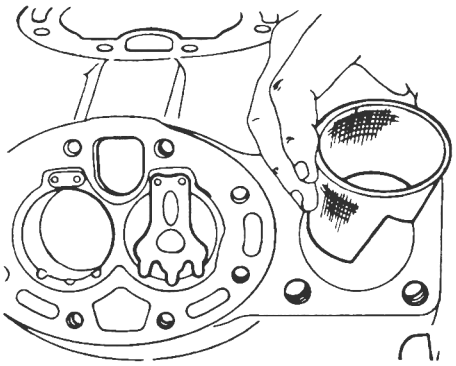

Figure 3-19. Installing Suction Strainer

3.9 ADDING OIL

Add the proper oil charge to the compressor through the oil fill plug. Refer to section 2.2.2 for the required oil charge. Refer to unit operation manual for other methods of adding oil to compressor.

3.10 INSTALLING COMPRESSOR

Refer to section 2.2.2 and the unit service manual to install the compressor. Allow compressor to run for 4 to 5 hours before checking new shaft seal assembly for leaks.

SIZE DIAMETER (INCHES)	THREADS PER INCH	TORQUE RANGE		USAGE
		FT-LB	M K G	
1/16	27 (pipe)	8 to 12	1.11 to 1.66	Pipe Plug – Crankshaft
1/8	27 (pipe)	15 to 20	2.07 to 2.77	Oil Return Check Valve – Crankcase
1/4	20 (pipe)	20 to 25	2.77 to 3.46	Pipe Plug – Gauge Connection
1/4	20	10 to 12	1.38 to 1.66	Connecting Rod Capscrew
1/4	28	6 to 10	0.83 to 1.38	Oil Pump Drive Segment (Vane Pump)
		12 to 16	1.66 to 2.21	Unloader Valve
5/16	18	16 to 20	2.21 to 2.77	Cover Plate – Plate End
				Bearing Head (Vane Pump)
		20 to 30	2.77 to 4.15	Discharge Service Valve
3/8	16	40 to 50	5.53 to 6.92	Pump End Bearing Head
				Bottom Plate - Crankcase
				Cylinder Head
				End Flange
				Shaft Seal Cover
1/2	13	55 to 80	7.61 to 11.06	Suction Service Valve
#l 0	32	4 to 6	0.55 to 0.83	Oil Pump Drive Segment (Vane Pump)
1-1/2	18 NEF	35 to 45	4.84 to 6.22	Oil Level Sight Glass

NEF — National Extra Fine

Table 3-2. Wear Limits

PART NAME	FACTORY MAXIMUM		FACTORY MINIMUM		MAXIMUM WEAR BEFORE REPAIR	
	INCHES	MM	INCHES	MM	INCHES	MM
SEAL END						
End Play (Seal Removed)	0.035	0.8890	.030	0.7620	–	–
Main Bearing Diameter	1.8760	47.6504	–	–	.002	0.051
Main Bearing Journal Diameter	–	–	1.8725	47.5615	.002	0.051
PUMP END						
Main Bearing Diameter	1.3760	34.9504	–	–	.002	0.051
Main Bearing Journal Diameter	–	–	1.3735	34.8869	.002	0.051
CONNECTING ROD						
Connecting Rod Diameter	1.3768	34.9707	–	–	.0020	0.051
Piston Pin Bearing	0.6883	17.4752	0.6878	17.4701	.001	0.0254
CRANKSHAFT						
Crankpin Diameter	–	–	1.3735	34.8869	.0025	0.0635
Throw – Height **(37 CFM)**	0.9698	24.6329	0.9678	24.5821	–	–
Throw – Height **(41 CFM)**	1.072	27.2288	1.070	27.1780	–	–
THRUST WASHER (Thickness)						
Pump End	0.145	3.6830	0.144	3.658	.0250	0.6350
Seal End	0.157	3.987	0.155	3.937	.0250	0.6350
CYLINDERS and PISTONS						
Bore	2.0010	50.8254	–	–	.002	0.051
Piston (Diameter)	–	–	See Figure 3-20		.002	0.051
Piston Pin (Diameter)	–	–	0.6873	17.4574	.001	0.025
Piston Ring Gap	0.013	0.3302	0.005	0.127	.025	0.635
Piston Ring Side Clearance	0.002	0.051	0.001	0.0254	.002	0.051

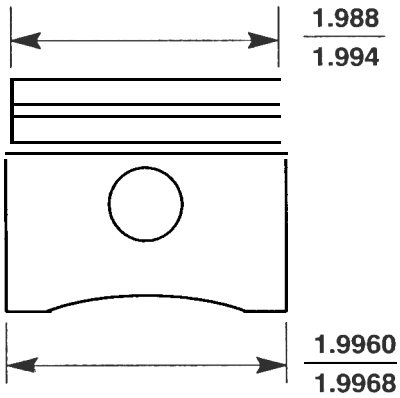

Figure 3-20. Piston Dimension (Wear Limits)

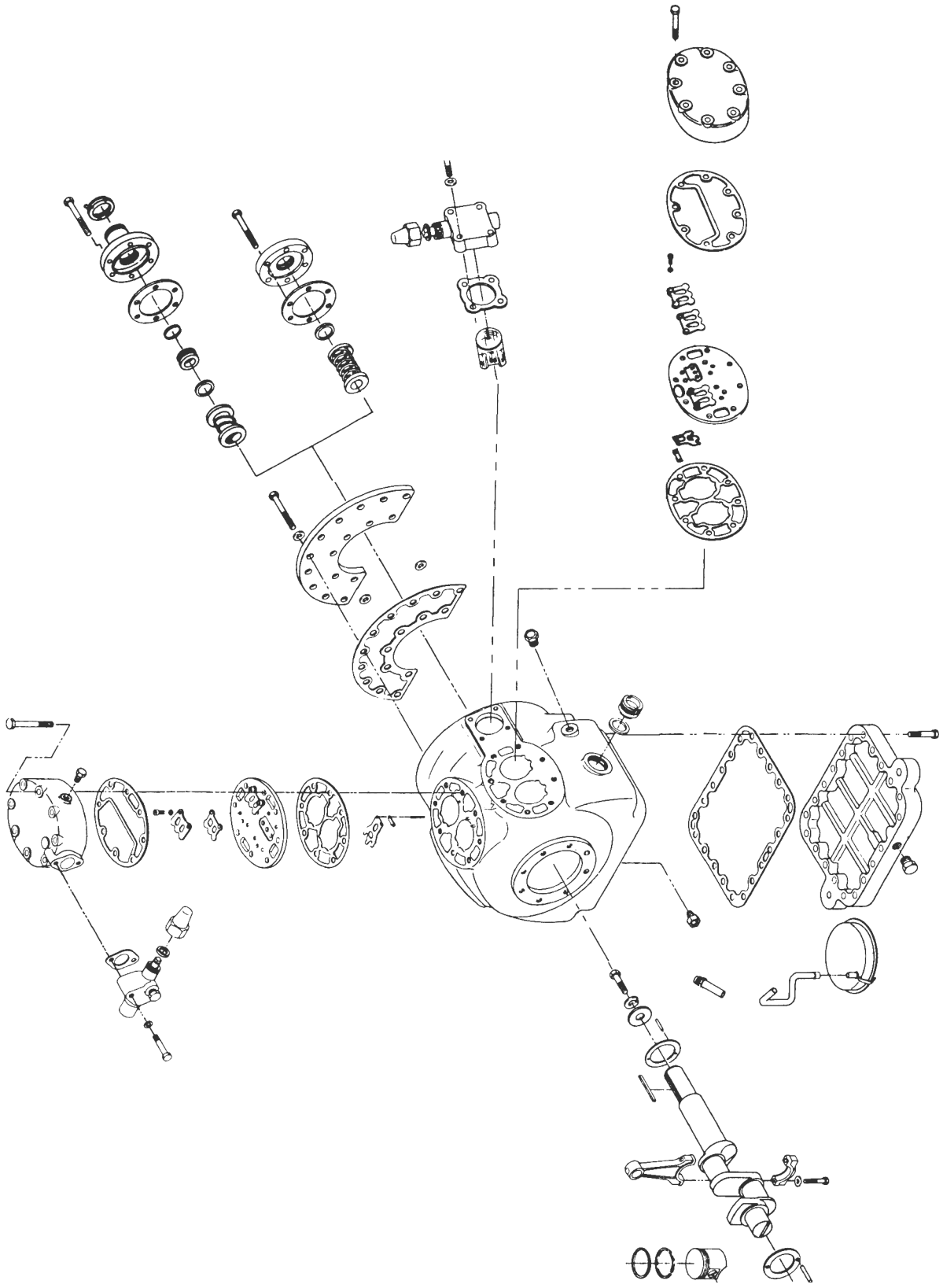

Figure 3-21. Compressor Exploded View

SECTION 23: ACCESSORIES

CONTENTS

1. AUDIO AND VIDEO EQUIPMENT DESCRIPTIONS 4
   - 1.1 Back-up PA Module 5
     - 1.1.1 Removal 5
     - 1.1.2 Installation 5
   - 1.2 Amp-2000 (High Power Amplifier) 6
     - 1.2.1 Removal 7
   - 1.3 Back-up PA Amplifier 7
   - 1.4 AM/FM Radio Cassette and Disc CD Changer 7
     - 1.4.1 Removal 8
     - 1.4.2 Installation 8
   - 1.5 Control Head 10
     - 1.5.1 Removal 10
     - 1.5.2 Installation 10
   - 1.6 Video 11
     - 1.6.1 Removal 12
     - 1.6.2 Installation 12
   - 1.7 Boom-Type Microphone 12
     - 1.7.1 Removal 12
     - 1.7.2 Installation 12
   - 1.8 Monitor 13
     - 1.8.1 Removal 13
     - 1.8.2 Installation 13
   - 1.9 Driver's Speakers 13
   - 1.10 Wire Less Microphone 14
   - 1.11 TV Tuner 16
   - 1.12 Karaoke 17
2. HUBODOMETER 18
   - 2.1 Description 18
   - 2.2 Operation 18
   - 2.3 Removal 18
   - 2.4 Installation 18
3. KEYLESS DOOR ENTRY SYSTEM (V.I.P. Model Only) 18
4. BACK-UP CAMERA AND MONITOR 18
5. COLD-STARTING AID (ETHER) 19
   - 5.1 Preventive Maintenance 19
   - 5.2 Troubleshooting (If System Is Non-functioning) 19
   - 5.3 Thermal Cutout Valve Quick Test 20
6. DESTINATION SIGN 20
   - 6.1 Description 20
   - 6.2 Maintenance 21
   - 6.3 Fluorescent Replacement 21
   - 6.4 Electric Motor Removal and Installation 21
   - 6.5 Sign Curtain Repair 21
7. LAVATORY 21
   - 7.1 Description 21
   - 7.2 Maintenance 22
   - 7.3 Ventilation Fan 22

7.3.1 Description 22
7.3.2 Maintenance 22
7.3.3 Removal and Installation 22
7.4 Door Lock 23
7.5 Emergency Buzzer 23
7.6 Fresh Water Tank 23
7.6.1 Fresh Water Tank Heater 24
7.7 Liquid Soap Dispenser 24
7.8 Flush Pushbutton 25
7.8.1 Pneumatic Timer Removal and Installation 25
7.8.2 Timer Adjustment 25
7.9 Flush Pump 25
7.9.1 Flush Pump Pressure Adjustment 25
8. WINDSHIELD WIPERS AND WASHER 26
8.1 General Description 26
8.2 Wiper Arm 27
8.2.1 Sweep Adjustment 27
8.2.2 Removal 28
8.2.3 Installation 28
8.3 Lower Linkage Adjustment 29
8.4 Upper Linkage Adjustment 30
8.5 Windshield Wiper Motors 30
8.5.1 Lower Windshield Wiper Motor Replacement 30
8.5.2 Upper Windshield Wiper Motor Replacement 31
8.6 Troubleshooting 32
9. SPECIFICATIONS 41

LIST OF ILLUSTRATIONS

Fig. 1: SOUND SYSTEM JUNCTION PLATE 4
Fig. 2: BACK-UP PA MODULE 5
Fig. 3: AMP 6
Fig. 4: BACK-UP PA AMPLIFIER 7
Fig. 5: PANASONIC CQ-R45EUC 7
Fig. 6: RADIO MOUNTING INSTRUCTIONS 8
Fig. 7: CONTROL HEAD AND RADIO MOUNTING INSTRUCTIONS 9
Fig. 8: CONTROL HEAD 10
Fig. 9: CONTROL HEAD GROUNDING INSTRUCTIONS 11
Fig. 10: PARCEL RACK 11
Fig. 11: VIDEO 12
Fig. 12: BOOM TYPE MICROPHONE 12
Fig. 13: REAR PANEL OF HOUSING (MONITOR) 14
Fig. 14: WIRE LESS MICROPHONE 15
Fig. 15: TV TUNER CONTROL DESCRIPTIONS 16
Fig. 16: KARAOKE (FRONT VIEW) 17
Fig. 17: KARAOKE (REAR VIEW) 18
Fig. 18: HUBODOMETER 18
Fig. 19: ENGINE 19
Fig. 20: COLD STARTING AID 20
Fig. 21: DESTINATION SIGN 21
Fig. 22: LAVATORY 22
Fig. 23: VENTILATION FAN MOTOR 22
Fig. 24: DOOR LOCK 23
Fig. 25: FUNCTIONING OF LAVATORY 24
Fig. 26: LIQUID SOAP DISPENSER 24
Fig. 27: SUMP TANK 25
Fig. 28: MOTOR LOCATION 26
Fig. 29: L.H. DASHBOARD 26
Fig. 30: MULTIFUNCTION LEVER 26
Fig. 31: WINDSHIELD WASHER 27
Fig. 32: LOWER WINDSHIELD WIPER 27
Fig. 33: UPPER WINDSHIELD WIPER 28
Fig. 34: LOWER WINDSHIELD WIPER INSTALLATION 29
Fig. 35: UPPER WINDSHIELD WIPER INSTALLATION 30
Fig. 36: TROUBLESHOOTING 33
Fig. 37: TROUBLESHOOTING 34
Fig. 38: TROUBLESHOOTING 35
Fig. 39: TROUBLESHOOTING 36
Fig. 40: TROUBLESHOOTING 37
Fig. 41: TROUBLESHOOTING 38
Fig. 42: TROUBLESHOOTING 39
Fig. 43: TROUBLESHOOTING 40

1. AUDIO AND VIDEO EQUIPMENT DESCRIPTIONS

The BACK-UP PA AMPLIFIER and its power amplifier are mounted on a sound system junction plate (Fig. 1). They are located over the front wheelhousing. To access, open the first baggage compartment. In addition to the public address (PA) systems, options for AM/FM stereo radio and cassette player, CD changer, karaoke, wire less microphone, video system with monitors and digital processor controller may be featured.

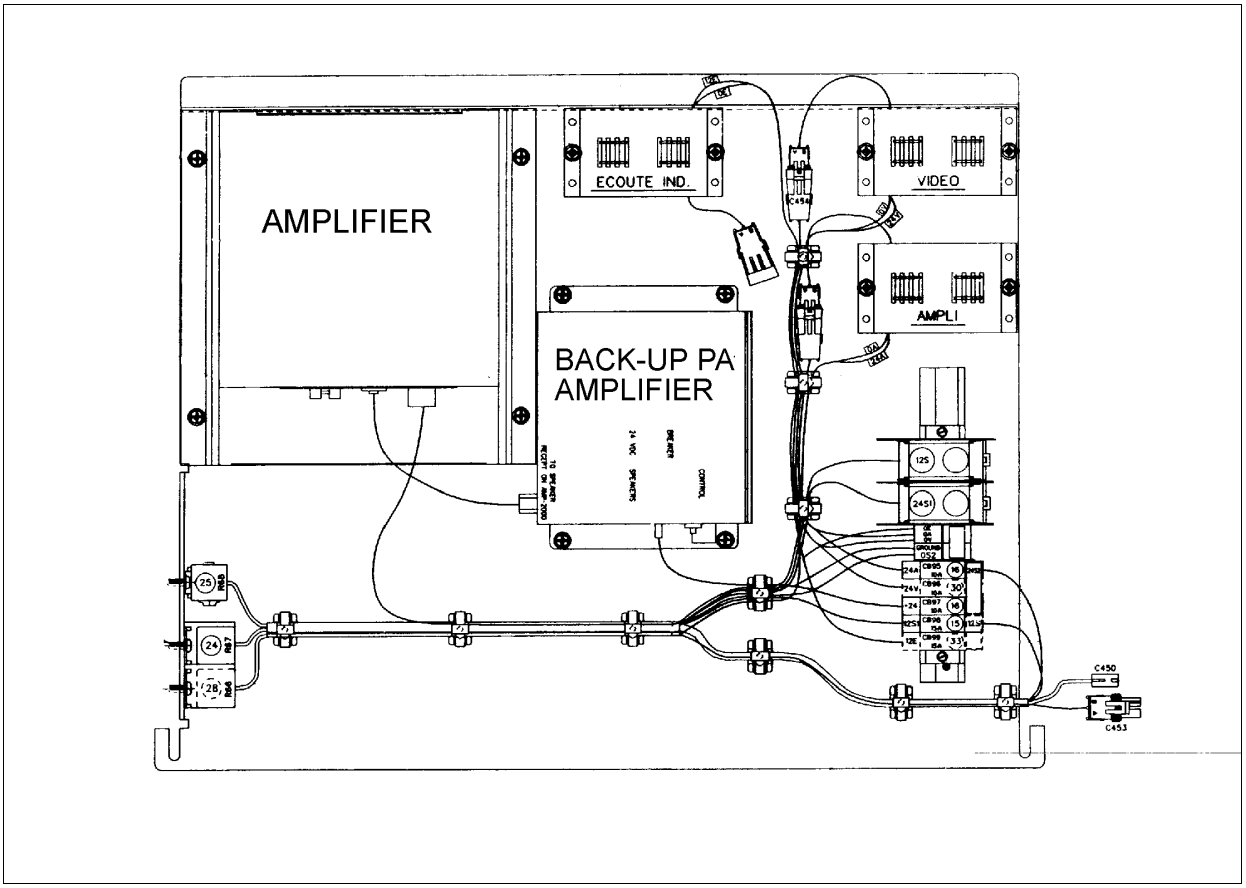

FIGURE 1: SOUND SYSTEM JUNCTION PLATE 23059

Each service module mounted to the underside of the parcel racks contains a 40-watt speaker. The speakers in passenger section (Twelve H3-41 or sixteen H3-45) are wired in stereo and are powered by the amplifier. A BACK-UP PA MODULE with volume control and one microphone outlet mounted in driver's area are provided as standard equipment.

1.1 Back-Up PA Module

The BACK-UP PA MODULE system is composed of a volume/tone preamp/power control unit (Fig. 2), power amplifier, microphone with mount bracket and microphone jack. The BACK-UP PA MODULE is located on L.H. side of driver seat. The microphone may be hand-held or boom-type (Fig.12). The microphone(s) may be installed at various locations on the coach.

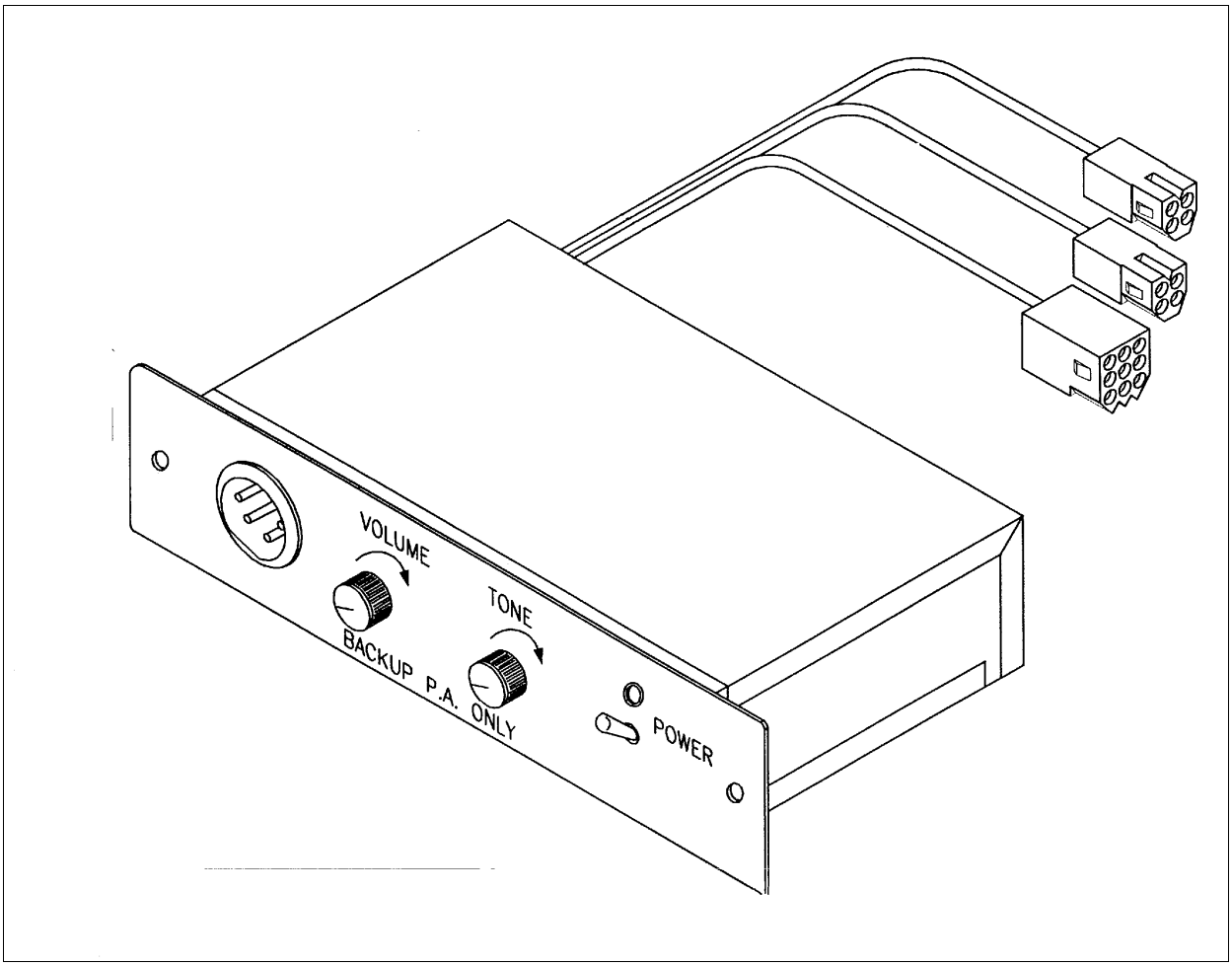

FIGURE 2: BACK-UP PA MODULE 23080

1.1.1 Removal

1. Place the battery disconnecting switches in the "OFF" position.
2. Remove the two Phillips-head screws.
3. Remove the BACK-UP PA MODULE.
4. Disconnect the power and micro wiring.

1.1.2 Installation

1. Connect BACK-UP PA MODULE wiring.
2. Replace the BACK-UP PA MODULE.
3. Replace the two Phillips-head screws.
4. Turn battery disconnecting switches in the "ON".

1.2 Amp-2000 (High Power Amplifier)

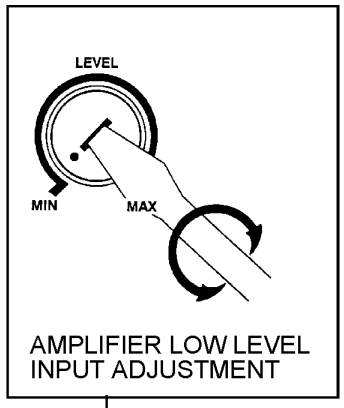

SPECIFICATIONS :

POWER : 24 V DC, NEGATIVE GROUND.
FREQUENCY RESPONSE : 10 - 100,000 Hz.
OUTPUT : 40 - 50 WATTS / CHANNEL RMS INTO 4 OHM AT 0.5% THD.
40 - 50 WATTS RMS SUBWOOFER OUTPUT INTO 4 OHM AT 0.5% THD.
PROTECTION : THERMAL OVERCURRENT SHUTDOWN REVERSE VOLTAGE PROTECTION, VOLTAGE SPIKE PROTECTION.

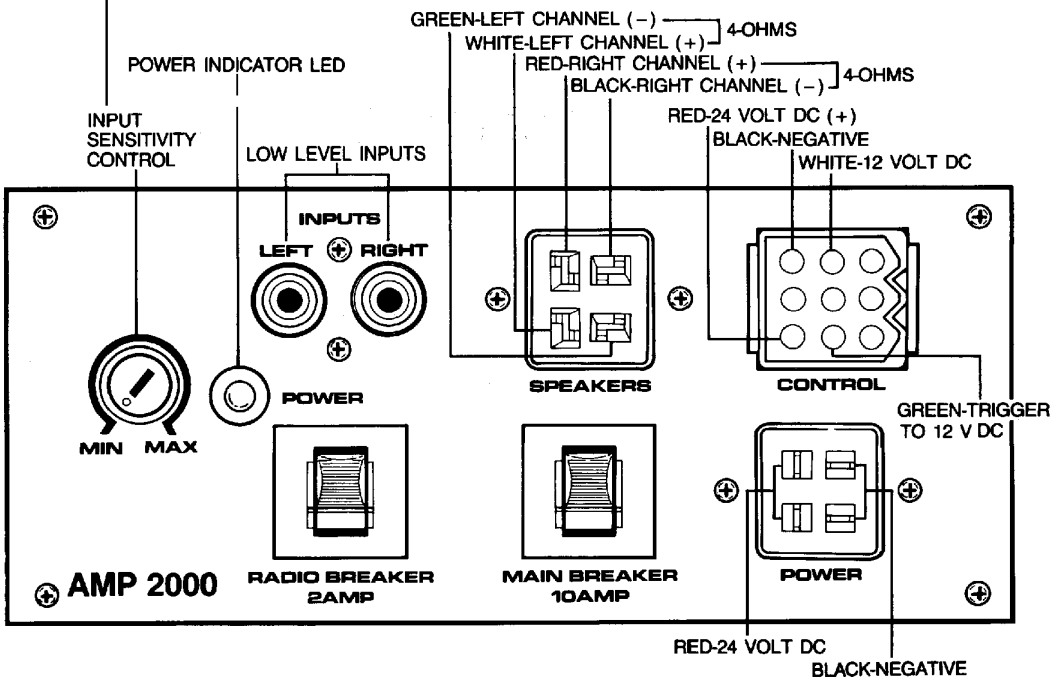

Caution:
1. Never connect speaker wires to ground.
2. Minimum impedance of 4 ohms per channel.

FIGURE 3: AMP-2000 23081

The AMP-2000 brings an added dimension to your stereo equipment and increases the total output of the system. The amplifier will perform with any unit operating in a 24-volt with negative ground electric system. The AMP-2000 is located over front wheelhousing. To access, open the first baggage compartment door.

The input sensitivity is adjustable from 100mV to 1V to match the output of the radio or tape deck. Set the volume control on the radio, then adjust the input control on the amplifier for an average listening level. This gives the best balance between radio output and system signal-to-noise ratio (Fig. 3).

Caution : *The low level input adjustment for this amplifier has been preset according to system specifications.*

1.2.1 Removal

Remove the amplifier(s) as follows:

1. Set the battery main disconnecting switch in the *"OFF"* position. Refer to Section 6: "Electrical System" for switch location.
2. Remove the sound system junction plate from its location. To perform this step, disconnect wiring connectors, remove cable ties and remove the bolts retaining the sound system junction plate.
3. Remove the four screws retaining amplifier(s) to its sound system junction plate.
4. Reverse the removal procedure to install the amplifier(s).

1.3 Back-Up PA Amplifier

The PA Backup Amplifier (Fig. 4) is located beside the Amplifier. To remove it, refer to the amplifier removal procedure.

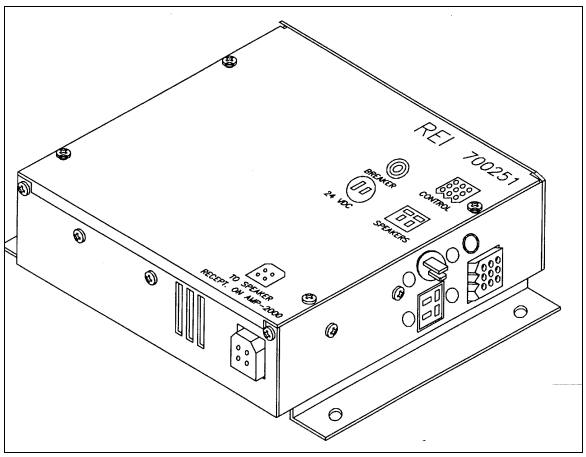

FIGURE 4: BACK-UP PA AMPLIFIER 23074

1.4 Am/Fm Radio Cassette And Disc CD Changer

The audio system is composed of an AM/FM radio cassette player *"Panasonic, model* CQ-R45EUC" (Fig. 5). Also, the vehicle may be equipped with a 6 or 12 disc CD changer, two additional hi-fi speakers in driver's area. A roof antenna as well as different microphone outlets, can be installed as optional equipment.

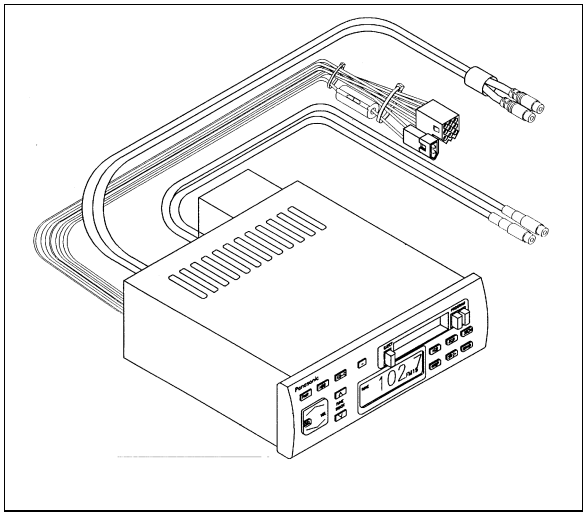

FIGURE 5: PANASONIC CQ-R45EUC 23082

Note: *Before attempting to solve an electrical problem on the sound system, refer to master wiring diagrams.*

Instructions for proper use of the radio are included in the *"Panasonic Owner's Manual"* which is provided in the technical publications box delivered with the vehicle. The radio is a serviceable component and should only be serviced by a qualified electronics technician. Refer to *"Panasonic Service Centers"* guide included in the technical publications box.

1.4.1 Removal

To remove the radio from its location, proceed as follows:

1. Place the battery disconnecting switches in the "OFF" position.
2. Remove the four Phillips-head screws retaining the R.H. lower control panel to the dashboard.
3. Carefully pull out panel from dashboard.
4. Disconnect metal strap and all wires from radio.
5. To unfasten the radio from its support, push in the dismounting pin included with the Owner's Manual.
6. If you need to remove face, remove screw securing detachable face.

1.4.2 Installation

To reinstall, reverse removal procedure and follow instructions on Figure 6 and 7.

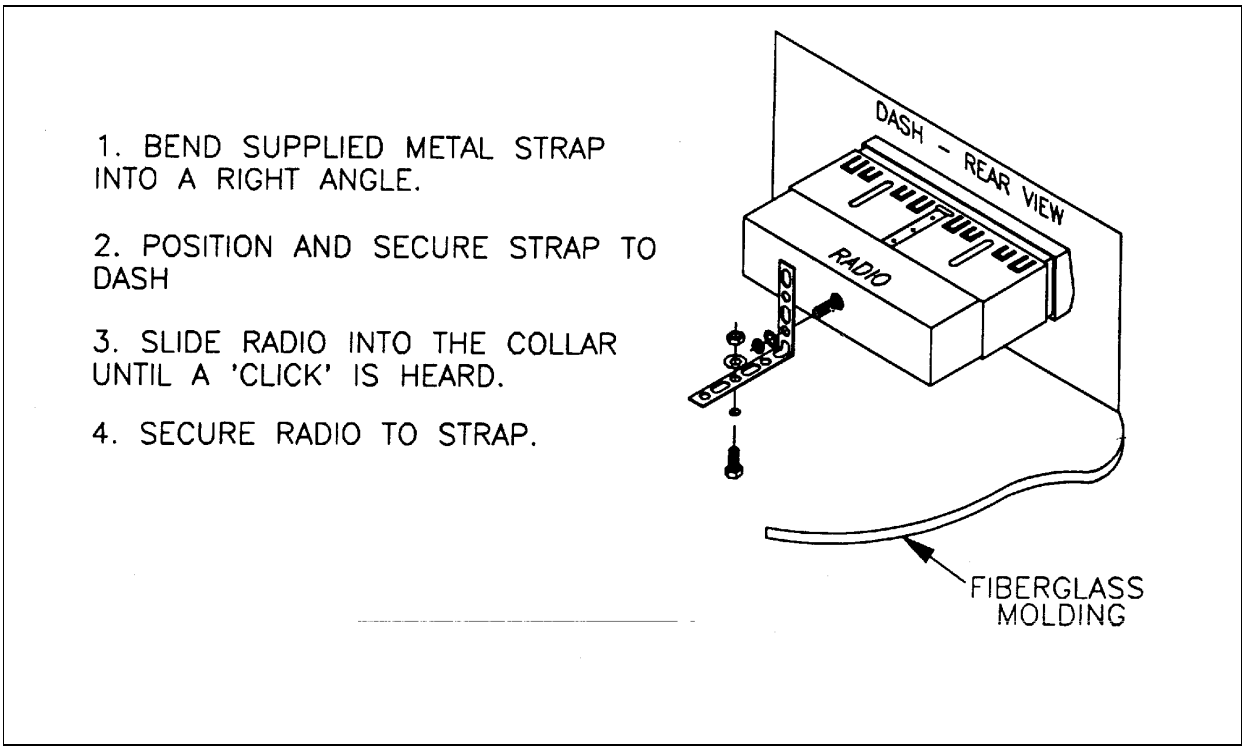

FIGURE 6: RADIO MOUNTING INSTRUCTIONS 23072

1. Cut opening in dash to indicated dimensions.

2. Secure the Mounting Collar.
Insert Mounting Collar into Bus's dashboard, and bend mounting tabs out with a screwdriver.

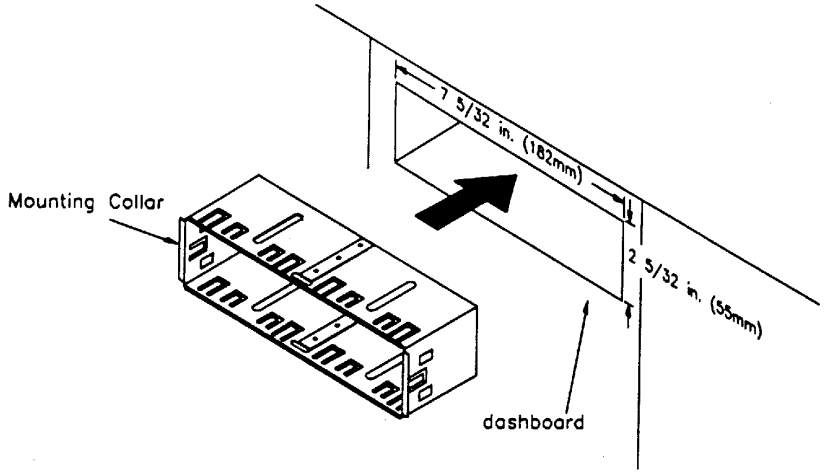

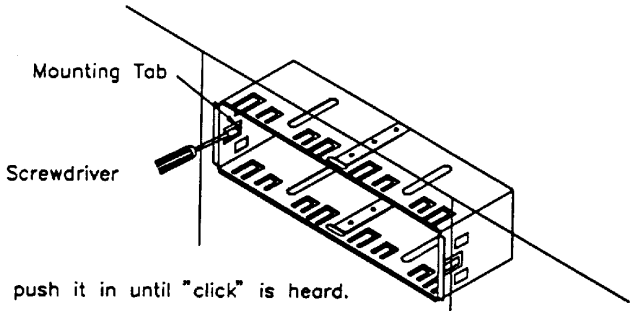

3. Insert the unit into Mounting Collar and push it in until "click" is heard.

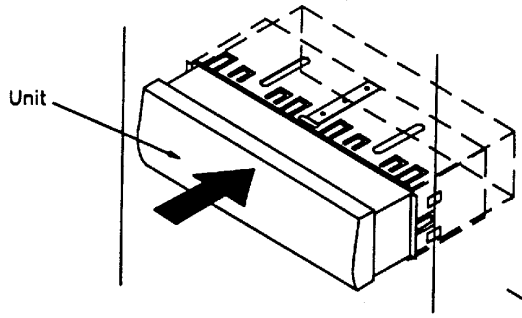

4. To remove unit insert Dismounting Pins and pull both pins.

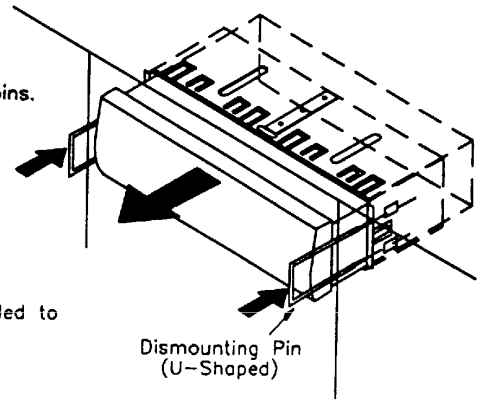

NOTE: Do not lose Dismounting Pins. They will be needed to remove the unit from the Bus's dashboard.

FIGURE 7: CONTROL HEAD AND RADIO MOUNTING INSTRUCTIONS 23073

1.5 Control Head

The system 2000 (Fig. 8) is designed exclusively for tour coach operations. A complete system will control the following equipment :

- A specially designed 70 watt per channel RMS amplifier, capable of driving up to twenty-six, four ohm speakers.
- Six, custom designed ten inch color monitors which incorporate a unique anti-theft locking slide mount. This makes installation and removal very easy.
- A specially modified VHS video cassette player that allows the operator convenient control over its functions.
- A digital Audio processor that incorporates a centralized system control. The System 2000's Microprocessor allows the operator to control up to three audio selections, permitting custom tailoring of each channel's sound quality. There are three microphone inputs for the PUBLIC ADDRESS SYSTEM, which are switchable between internal and external speakers. The unit contains a separate Video Section for the VCP which allows the driver to control his own separate audio selections.

Instructions for proper use of the control head are included in the *"R.E.I. Operator's Manual"* which is provided in the technical publications box delivered with the vehicle. See figure 7 and 9, for mounting instructions.

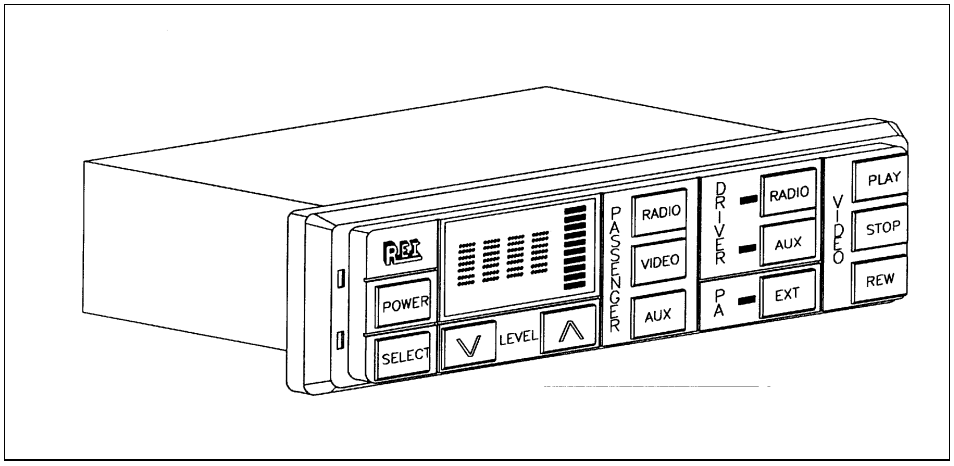

FIGURE 8: CONTROL HEAD 23070

1.5.1 Removal

To remove the control head from its location, proceed as follows:

1. Place the battery disconnecting switches in the "OFF" position.
2. Remove the dahboard protective cover.
3. Disconnect grounding strap and all wires from control head.
4. To unfasten the control head from its support, push in the dismounting pin (U-shape), included with "R.E.I Opetator's Manual".

1.5.2 Installation

To reinstall, reverse removal procedure and follow instructions on Figure 7 and 9.

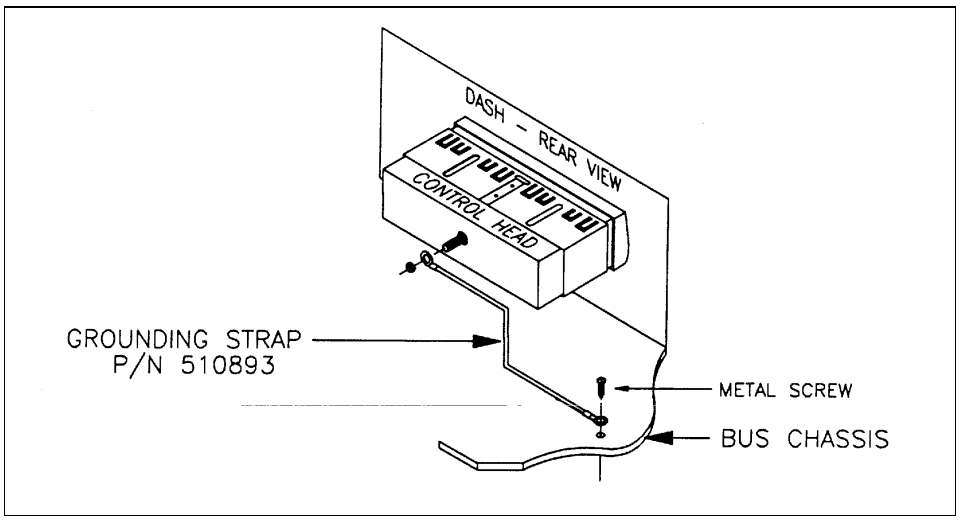

FIGURE 9: CONTROL HEAD GROUNDING INSTRUCTIONS 23071

1.6 Video

The video is located in the first parcel on driver's side (Fig. 10 and 11). Instructions for proper use of the video are included in the *"Operator's Manual"* which is provided in the technical publications box delivered with the vehicle.

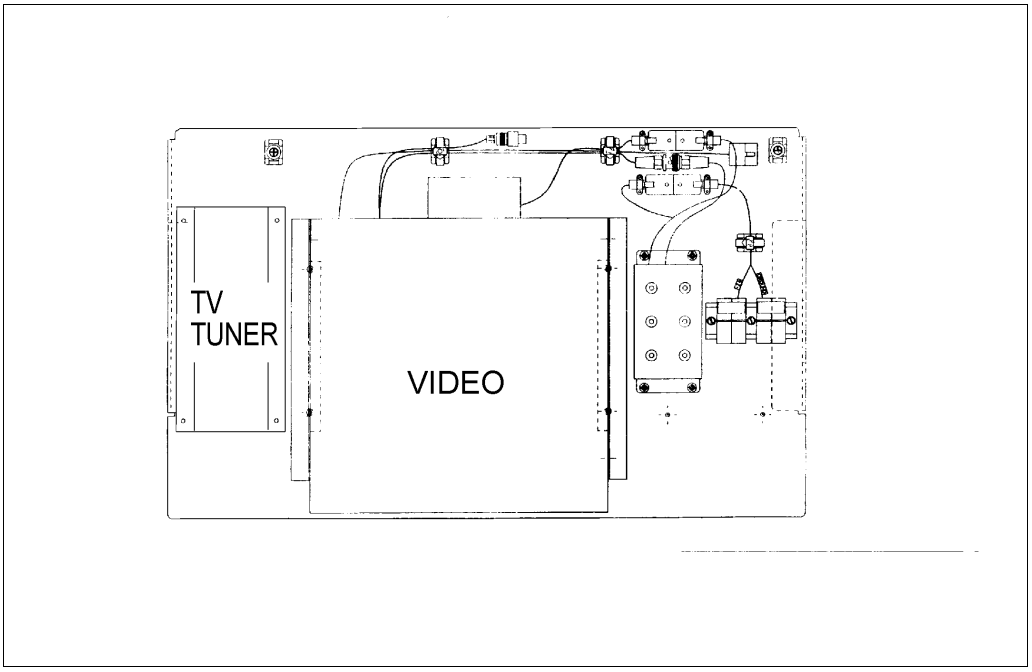

FIGURE 10: PARCEL RACK 23060

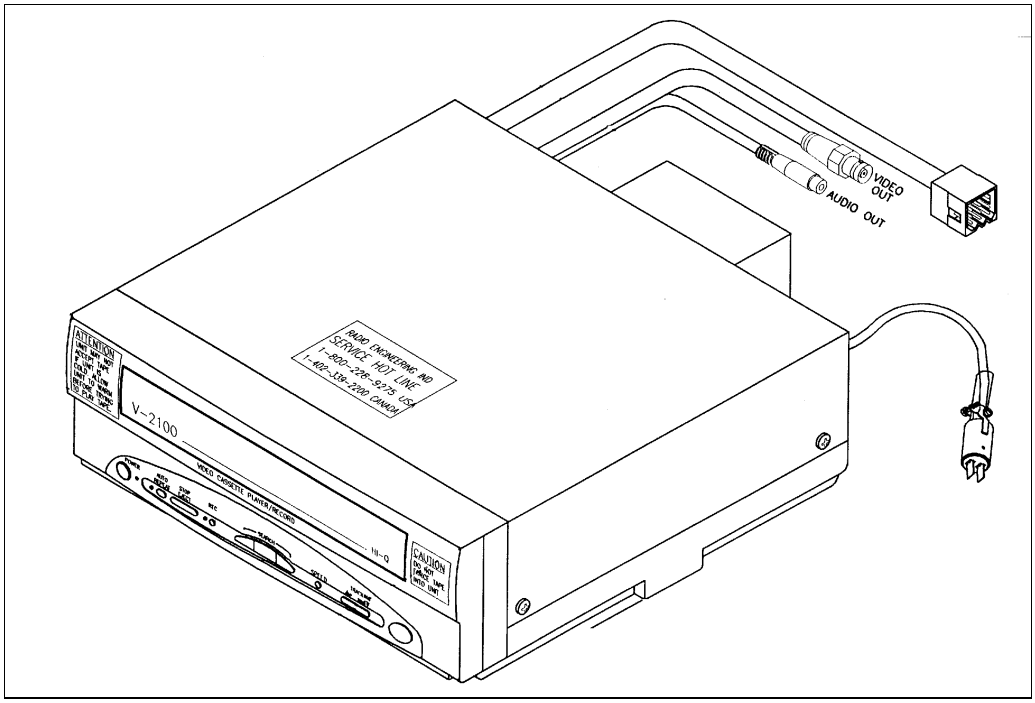

FIGURE 11: VIDEO 23075

1.6.1 Removal

1. Place the battery disconnecting switches in the "OFF" position.
2. Remove VCP/VCR mounting locknuts from rubber mounts.
3. Disconnect wiring.
4. Remove VCP/VCR unit from parcel rack.

1.6.2 Installation

1. Insert VCP/VCR into parcel rack and align rubber mount studs to mounting holes. Insert mount studs through mounting holes.
2. Install locknuts on mount studs.
3. Connect wiring.
4. Turn battery disconnecting switches in the "ON" position.

1.7 Boom-Type Microphone

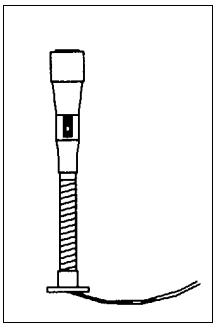

23083

FIGURE 12: BOOM TYPE MICROPHONE

1.7.1 Removal

1. Place the battery disconnecting switches in the "OFF" position.
2. Remove mounting screws at mounting flange.
3. Disconnect wiring.

1.7.2 Installation

1. Connect wiring.
2. Align mounting flange with holes and install screws.
3. Remove spacer block mounting screws.

4. Insert spacer block and install mounting screws.
5. Turn battery disconnecting switches in the "ON" position.

1.8 Monitor

For monitor adjustment, see figure 13.

1.8.1 Removal

The six, ten-inch color monitors are slide mounted and retained by key locks. A LED light on the back indicates if the monitor is "ON". The "RED" button is the monitor on/off switch and the pin style button is the circuit breaker reset button.

1. Place the battery disconnecting switches in the "OFF" position.
2. Unlock the monitor slide and pull toward front of monitor.
3. After removal, cover mount location with the monitor cover assembly and lock.

1.8.2 Installation

1. Remove cover over mounting bracket if needed.
2. Align monitor mount with slide and slide monitor or mount cover into place.
3. Lock monitor or cover to prevent removal.

Note: *Be sure connections are not bent or damaged . If monitor is not being replaced, immediately install the mounting cover.*

1.9 Driver's Speakers

The driver's speaker's are mounted one on each side. This arrangement provides the driver with clear stereo sound. Controls for the driver's audio allow selection between the radio or the auxiliary audio (independent of the passenger's speakers) or muting the speakers.

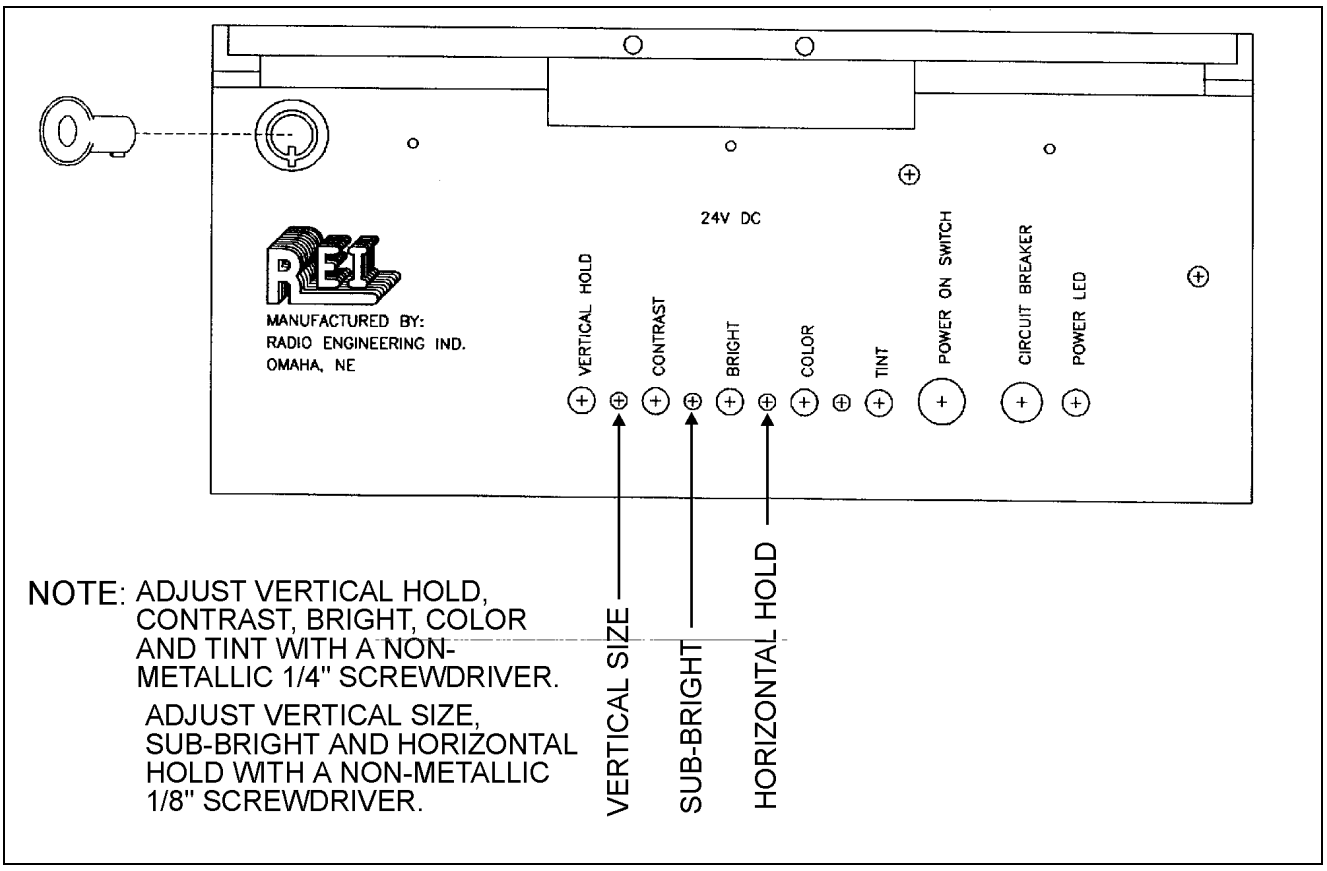

FIGURE 13: REAR PANEL OF HOUSING (MONITOR) . 23076

1.10 Wire Less Microphone

R-505 is a VHF high-band system with quartz controlled fixed frequency and tone squelch design (Fig. 14). The R-505 must be combined with Q series of wireless microphones, and can be used as an individual or a multi-channel system with 2 or more sets together. Instructions for proper use of the R-505 are included in the *"R.E.I. Operating Manual"* which is provided in the technical publications box delivered with the vehicle.

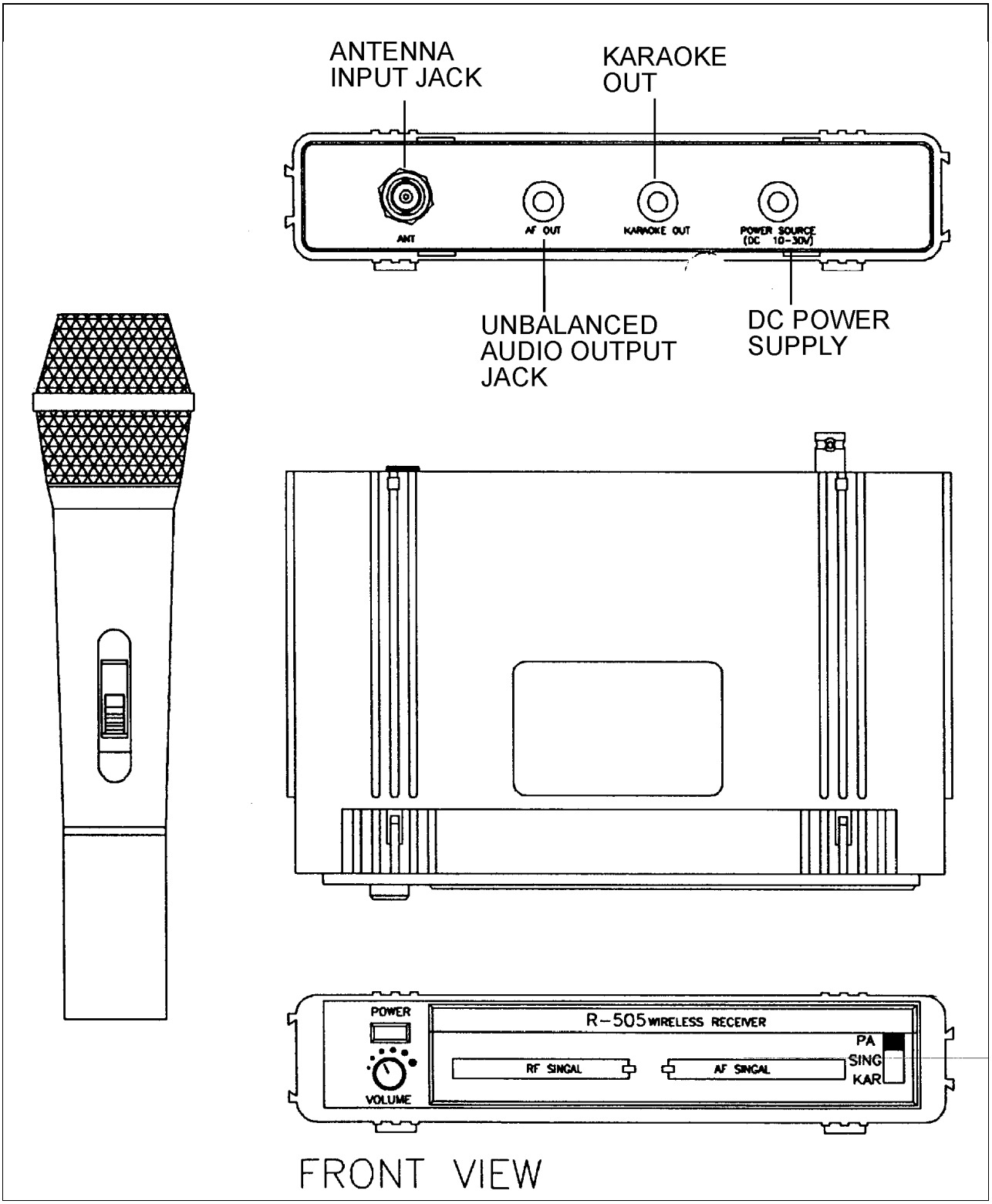

FIGURE 14: WIRE LESS MICROPHONE 23077

1.11 TV Tuner

For TV tuner control descriptions, see figure 15.

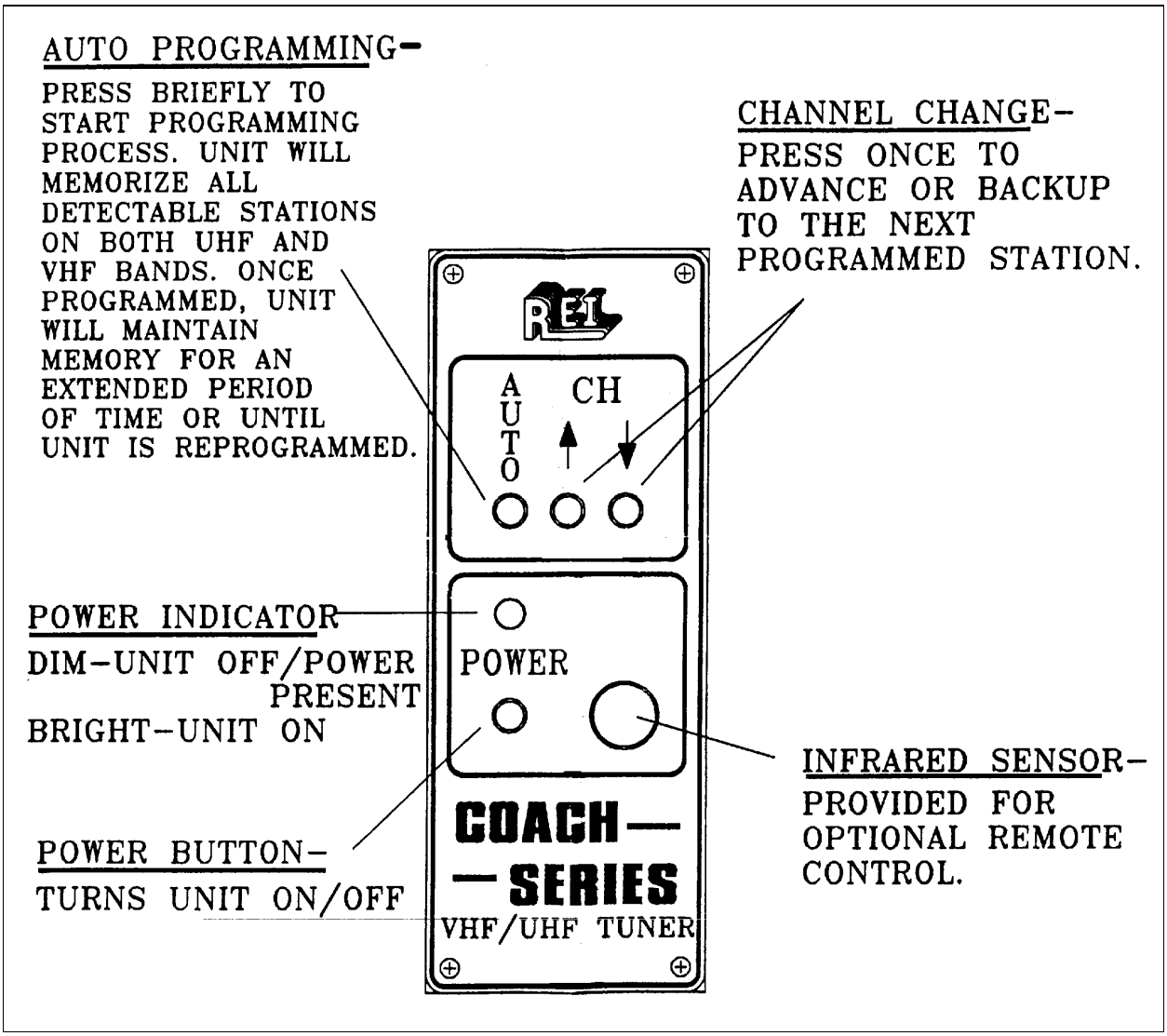

FIGURE 15: TUNER CONTROL DESCRIPTIONS 23061

1.12 Karaoke

Instructions for proper use of the Karaoke are included in the *"Operating Manual"* which is provided in the technical publications box delivered with the vehicle.

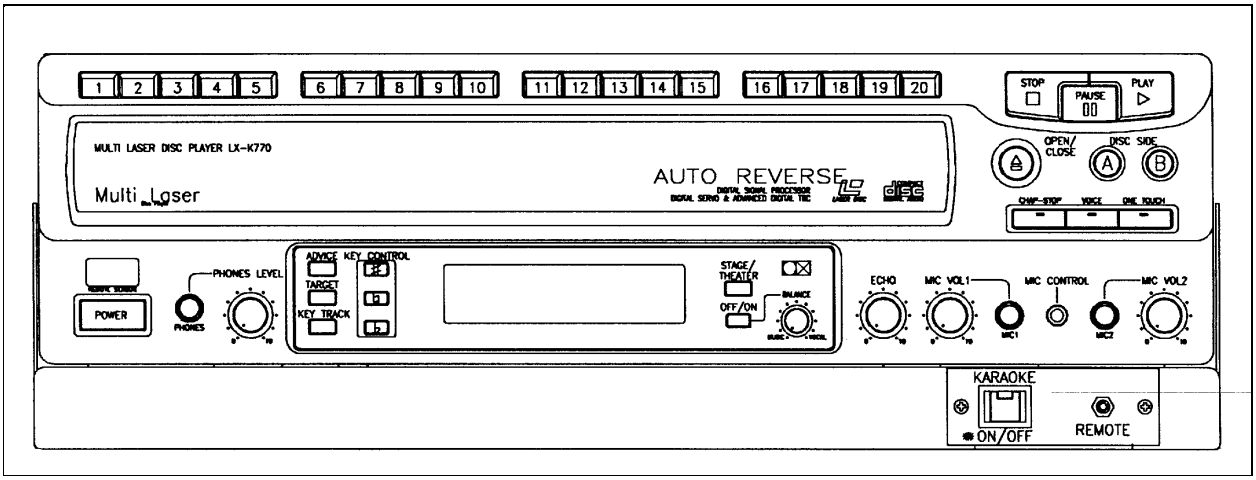

FIGURE 16: KARAOKE (FRONT VIEW) 23078

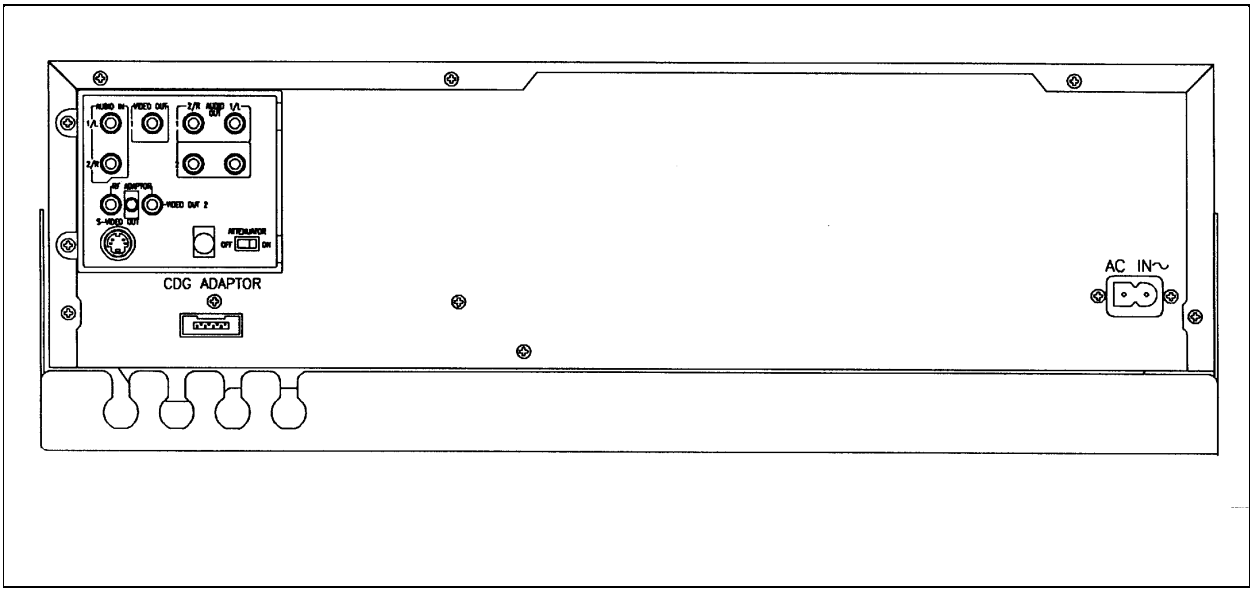

FIGURE 17: KARAOKE (REAR VIEW) 23079

2. HUBODOMETER

2.1 Description

An optional wheel hubodometer (Fig. 18) may have been installed on the R.H. side of the drive axle. It indicates the total distance in miles or kilometers covered by the coach since it has left the factory, including road testing.

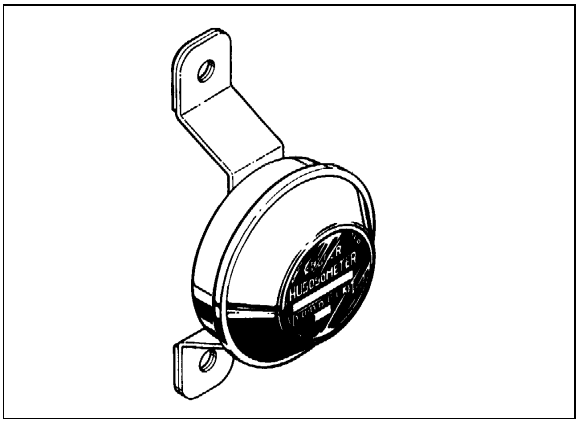

FIGURE 18: HUBODOMETER 23027

2.2 Operation

The hubodometer is calibrated for a specific wheel size (diameter). Wheel rotation causes a mechanism inside the hubodometer to record distance after a predetermined number of rotations. The unit should be serviced at a competent speedometer repair facility.

Note: *Do not use paint, solvent or thinner on hubodometer face or on plastic hubcaps. Do not weld on hubodometer.*

2.3 Removal

To remove the unit, remove the two lock nuts and washers securing it to the wheel hub, and pull the unit off the studs.

2.4 Installation

Place the hubodometer unit over the wheel hub studs. Replace the lock washers and nuts. Torque stud nuts to 110-165 lbf•ft (150-225 N•m).

3. KEYLESS DOOR ENTRY SYSTEM (V.I.P. Model Only)

The keyless door entry system has two main components:

1. A five-button keypad on the outside panel of the entrance door.
2. An electronic microprocessor/relay module mounted on top of the defroster unit.

The factory-programmed code is permanently recorded on a plastic card (credit card size) which is supplied to the owner, and on a decal which is affixed on the electronic microprocessor/relay module mounted on defroster unit. Owner can also select and program its own personal code (e.g. a birthday or part of a social security number) by pressing a specified sequence of keypad buttons. Refer to *"Owner's Manual"* for instructions on how to program a new code and for any operation information relating to the keyless door entry system.

Caution: *Never press on the keypad buttons with a key, a pencil or any sharp object. Such objects could damage the buttons. Although each button is provided with two digits separated by a vertical line, there is only one contact per button. Press in center of button, i.e. between the two digits where there is the vertical line.*

Before attempting to solve an electrical problem on the keyless door entry system, refer to wiring diagrams (V.I.P. model).

Caution: *Do not tamper the electronic microprocessor/relay module seal during the vehicle warranty period as it will void its warranty.*

4. BACK-UP CAMERA AND MONITOR

For information on these system, refer to wiring diagram and to Clarion manuals, located in the publication box.

5. COLD STARTING AID (ETHER)

The vehicle can be equipped with an electrically-operated type ether cold starting aid designed to ease engine starting when temperature is below 35 °F (2 °C).

On vehicles equipped with cold starting aid, the system consists of the main following parts:

- Ether starting aid switch
- Ether cylinder
- Solenoid valve (24 V)
- Thermal cutout valve
- Atomizer

The control rocker switch is located near the ignition switch on the L.H. lower switch panel. This switch is provided with a locking mechanism to avoid accidental use when engine is running. To activate the ether starting aid, proceed as follows:

Caution: *Do not use additional ether dischargeshots during engine starting. Do not discharge several shots during ether starting aid procedure. The valve is gauged in function of engine cylinders. Too much ether may be detrimental to engine cylinders, moreover it may render void thewarranty.*

1. To fill solenoid valve, prior to cranking engine, slide down lock tab while pressing rocker switch for three seconds.
2. Release switch to discharge shot.
3. Allow three seconds for shot to discharge.
4. Start engine. If engine fails to start, repeat procedure.

Caution: *This practice should be performed only when absolutely necessary. Excessive use of fluid could result in serious engine damage.*

The ether cylinder and solenoid valve assembly are mounted on the engine compartment wall and are accessible from the engine compartment R.H. side door.

The thermal cutout valve is mounted on the engine (radiator side). Its function is to prevent discharge of ether when engine is warm (over 90 °F (32 °C)). An atomizer is installed on top of air intake duct (refer to fig. 19).

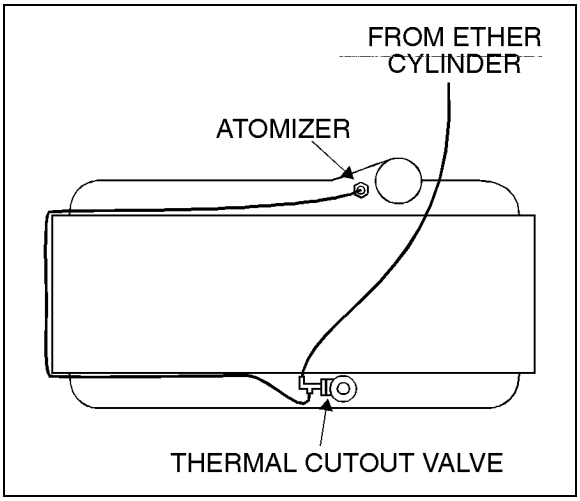

FIGURE 19: ENGINE 23032

5.1 Preventive Maintenance

During the summer months, remove cylinder to avoid high temperature actuation of the cylinder safety relief device. Always screw valve cap into solenoid valve opening to prevent entrance of road dirt. When removing cylinder, be careful to prevent dirt from entering the valve.

5.2 Troubleshooting (If System Is Non-functioning)

Warning: *During the following test, direct free end of tube away from personnel and all sources of ignition as this fuel is extremely flammable. Avoid breathing vapors and contacting fuel with skin. Never smoke during test.*

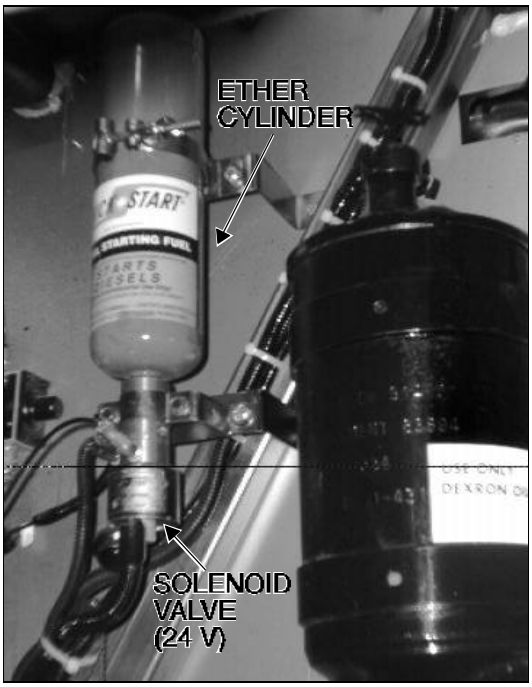

FIGURE 20: COLD STARTING AID 23033

1. Check cylinder for hand tightness and fuel supply. Empty cylinder weight is approximately 17 oz (480 g); full cylinder weight is approximately 35 oz (990 g). If cylinder is empty, replace it. Before replacing cylinder, install new valve gasket in solenoid valve.
2. If still not functioning, disconnect tubing at solenoid valve fitting. Actuate solenoid valve. (Ask an assistant to actuate solenoid valve by means of the rocker switch on the dashboard.)
   - If solenoid valve is non-functioning, check electric circuit, (refer to wiring diagrams). If sound, remove and replace the solenoid valve. If not, repair electric circuit.
   - If valve is functioning, reassemble valve fitting and connect tube. Disconnect tube at thermal cutout valve from port "Tube from valve".
3. Actuate the solenoid valve.
   - If fuel is not discharged from tube, remove tube and blow out or replace.
   - If fuel is discharged, connect tube to thermal cutout valve, and disconnect other tube.
4. Actuate the solenoid valve.
   - If fuel is not discharged, replace the cutout valve.

Note: *If engine coolant temperature is 90 F (32 C) or over, it is normal that fuel is not discharged as the valve is in closed position.*

   - If fuel is discharged, connect tube to thermal cutout valve, and disconnect tube from atomizer.
5. Actuate the solenoid valve.
   - If fuel is not discharged from tube, fuel line is clogged. Remove tube and blow out or replace.
   - If fuel is discharged, replace the atomizer.

5.3 Thermal Cutout Valve Quick Test

1. Engine coolant temperature must be below 90 °F (32 °C).
2. Temporarily disconnect tube at thermal cutout valve from port *"Tube to atomizer"*.
3. Actuate solenoid valve. (Ask an assistant to actuate solenoid valve by means of the rocker switch on the dashboard.) Fuel should be discharged through the thermal cutout valve.

Warning: *Avoid breathing vapors and contacting fuel with skin. Never smoke during test.*

4. Reconnect tube to thermal cutout valve.
5. Start engine, using cold starting aid if necessary. Stop engine when it reaches operating temperature.
6. Disconnect tube at thermal cutout valve as in step 2, and repeat step 3. No fuel should be discharged.

6. DESTINATION SIGN

6.1 Description

The destination sign is located at upper front of the vehicle. The lighting is provided with a fluorescent tube which is activated by means of a rocker switch located on the L.H. side control panel. The destination sign is electrically operated. Its motor is controlled by two rocker switches mounted side by side on the destination sign. The small one determines the

rolling speed without actuating it. The larger switch (momentary type) controls and actuates the rolling direction (forward or backward).

6.2 Maintenance

Inspect the following items regularly:

1. Check for free and easy mechanism movement.
2. Check for loose items on the sign mechanism, such as wire, loose clips, hanging tape, etc.
3. Check tension and condition of the two drive belts and replace as required.
4. Periodic lubrication is **NOT** recommended.

6.3 Fluorescent Replacement

1. Remove the six Phillips-head screws and washers retaining the destination sign cover, then carefully remove the cover from its location.
2. Remove both Phillips-head screws, one on each fluorescent assembly hinged bracket (see fig. 21), then lower assembly.

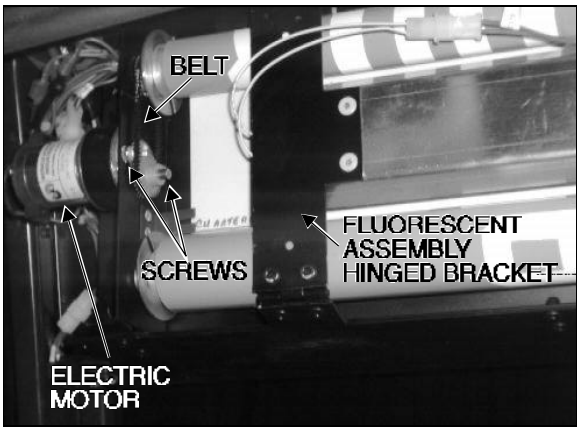

FIGURE 21: DESTINATION SIGN 23034

3. Push on tab located on each fluorescent pin receptacle while removing fluorescent.
4. Install new fluorescent, then reinstall the assembly by reversing the above procedure.

6.4 Electric Motor Removal and Installation

To remove the electric motor, repeat previous step 1, plus the following:

1. Disconnect wires from electrical motor.
2. Remove both screws retaining motor to destination sign frame (see fig. 21).
3. Slide motor upwards, then remove the drive belt.
4. Remove motor through the opening intended for this purpose.
5. Install the motor by reversing the above procedure.

6.5 Sign Curtain Repair

In the event a destination sign curtain is torn, it can be repaired with 3M polyester tape or any equivalent cellophane tape. When repairing a tear, the tape should be used on both sides of the curtain.

7. LAVATORY

7.1 Description

The lavatory is located in the rear R.H. corner of coach and is equipped with the following standard items: chemical flush toilet, towel and toilet tissue dispensers, waste container, washbasin, fresh water reservoir, low temperature water safety valve, mirror, fluorescent lighting, cleaning cabinet. It may also be equipped with liquid soap and wet-type towel dispensers, an ashtray and a heating element for the fresh water reservoir, as optional equipment.

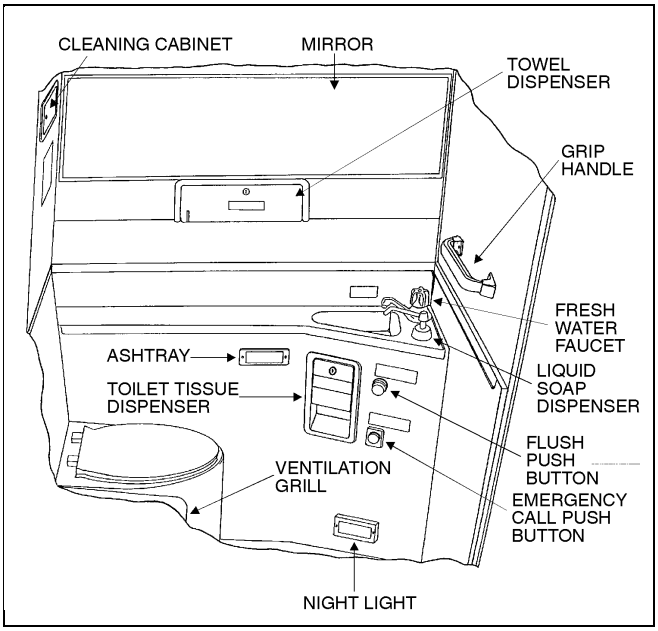

FIGURE 22: LAVATORY 23035

Locking the door from inside will illuminate the ceiling fluorescent light plus outside signs which are mounted on the outer wall of lavatory, over the windshield and an indicator light on the L.H. dashboard. A night-light is always illuminated when ignition switch is in the *"ON"* position.

7.2 Maintenance

The servicing procedure for the lavatory is described in the *"Operator's Manual"* included in the technical publications box delivered with the vehicle.

7.3 Ventilation Fan

7.3.1 Description

The lavatory ventilation fan, mounted in engine compartment over the oil reserve tank, serves two purposes. It exhausts objectionable odors and provides a constant air circulation in the lavatory compartment by heating or cooling the lavatory with the vehicle ambient air. Air flows in the lavatory compartment through a vent grill located in the upper section of the lavatory door and exhausts through grills located on both sides of toilet.

Note: *This fan runs constantly whenever the ignition switch on the L.H. lower control panel is in the "ON" position.*

7.3.2 Maintenance

The frequency of preventive maintenance should be determined according to vehicle mileage and operating conditions. However, it is recommended to check this item approximately every 50,000 miles (80 000 km).

Remove fan and motor assembly. Check for fan housing wheel and motor free operation. When defective motor occurs, new motor must be installed.

Note: *This motor is similar to those used on the driver's defroster and upper windshield defroster units.*

7.3.3 Removal and Installation

1. With the engine compartment rear door opened, remove hose clamp securing duct to ventilator inlet, and disconnect duct.
2. Disconnect the ventilator motor wiring connector.
3. Remove the two nuts retaining the ventilator fan housing support to the square tube. Remove the ventilator assembly from its location.
4. The unit can now be disassembled and motor replaced.



FIGURE 23: VENTILATION FAN MOTOR 23036

5. Reverse previous steps to reinstall ventilator assembly on vehicle.

7.4 Door Lock

Lavatory door lock has inside and outside handles, as well as an inside latch to lock door from inside the compartment. If the lock fails to release, the door can be opened from the outside using a special key which is supplied to the driver. Lock assembly can be removed from the door, then readily disassembled and parts replaced, if necessary (see fig. 24). A thin coat of lubricant on all moving parts will ensure trouble-free operation.

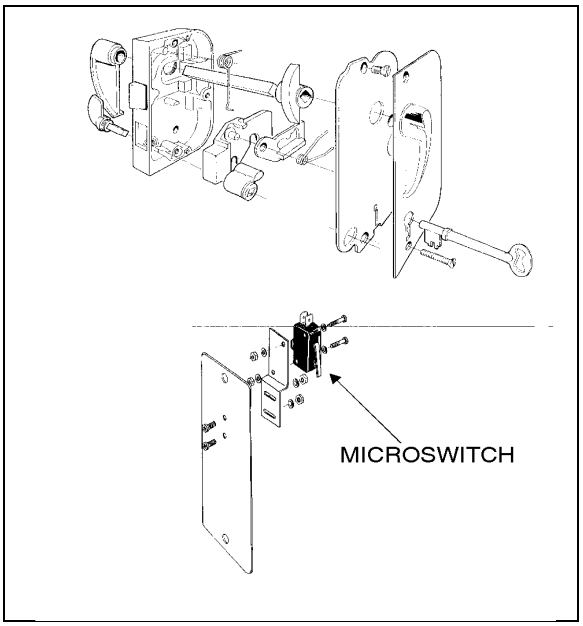

FIGURE 24: DOOR LOCK 23037

7.5 Emergency Buzzer

The lavatory emergency buzzer is mounted on the alarm junction box in front service compartment, and sounds when the emergency call pushbutton switch in the lavatory compartment is activated. For specific wiring information, refer to wiring diagrams. To remove the emergency call pushbutton switch, proceed as follows:

1. Remove both Phillips-head screws retaining pushbutton switch plate to wall.
2. Using the appropriate key, unlock and open the toilet tissue dispenser flap. (If equipped with paper dispenser (rolls), remove the steel plate and proceed to step 5).
3. Remove all toilet tissues.
4. Unscrew the Phillips-head screw retaining the toilet tissue dispenser assembly, and remove from its location.
5. Remove switch through this opening, taking care to disconnect electric wires.

7.6 Fresh Water Tank

The fresh water tank located at rear of lavatory wall (over cleaning cabinet), supplies water to the washbasin by gravity. Two tubes are connected in the upper section of tank (see fig. 25). One serves as overflow as well as a vent tube and runs along the wall to the underside of the lavatory close to the engine air filter housing, while the other tube is connected to the fresh water fill valve which is mounted over the engine oil reserve tank. A third tube connected in the lower section of fresh water tank is provided with a TEE-connector and allows fresh water to flow to the washbasin faucet and to the low temperature water safety valve for automatic or manual drainage. An access panel, located at rear of last R.H. side row of seats and secured in place with 6 Phillips-head screws, allows access to the cleaning cabinet and fresh water tank tubing's, fresh water tank heater and different wiring connectors.

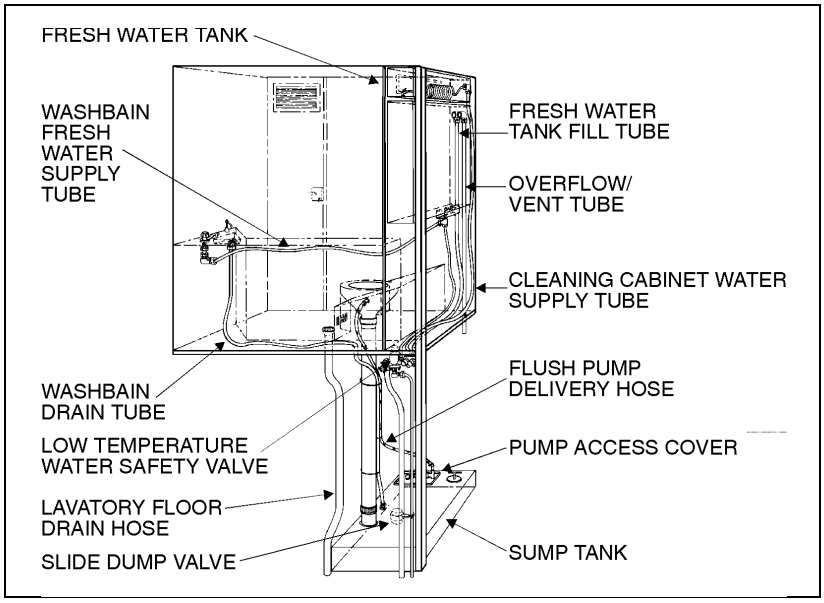

FIGURE 25: FUNCTIONING OF LAVATORY 23038

7.6.1 Fresh Water Tank Heater

A 75 watt, 110 volt AC immersion-type water heater is installed in the bottom of the fresh water tank. The heated portion of element must be immersed at all times to ensure proper heater life. Its power source is provided by the 110 volt in-station connector also mounted on the alarm junction box.

7.7 Liquid Soap Dispenser

A liquid soap dispenser may have been installed as optional equipment. To refill dispenser, proceed as follows:

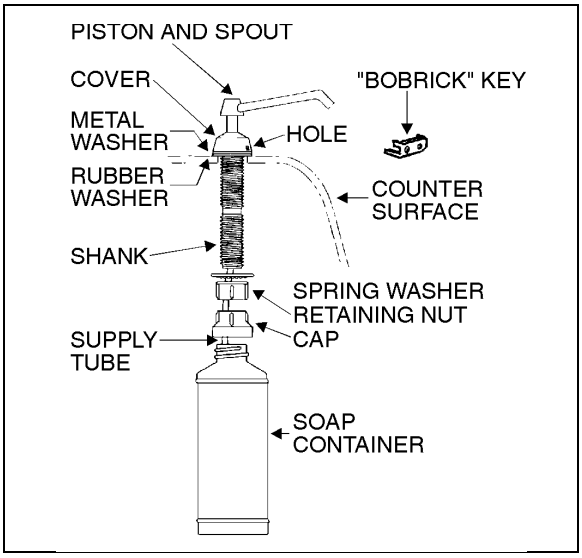

FIGURE 26: LIQUID SOAP DISPENSER 23039

1. Turn cover slightly clockwise until it stops.
2. Insert projection at end of *"BOBRICK"* key into rectangular hole in cover (see fig. 26). Push straight in. While holding *"BOBRICK"* key in, turn cover counterclockwise about 1/8 turn.

Caution: *Do not use "BOBRICK" key to turn cover.*

3. Lift out piston and spout, cover and supply tube.

4. Fill dispenser with soap. This model can dispense vegetable oil soaps, synthetic detergents, and lotion soaps.

Caution: *Never use abrasive cleaners.*

5. Replace supply tube, piston, and spout mechanism reversing the steps above.
6. Secure the cover by turning clockwise until lock snaps into position.

Note: *The dispenser requires priming when extremely viscous lotion soaps are used. Remove piston and spout, cover and supply tube assembly. Pump water into assembly, then replace into dispenser.*

7.8 Flush Pushbutton

The green flush pushbutton is located near the toilet tissue dispenser. Press on pushbutton to actuate a pneumatic timer located on the other side of wall. This timer allows an electric current flow during a preset time to a pump into the sump tank.

7.8.1 Pneumatic Timer Removal and Installation

1. Unscrew and remove the flush push button lock nut.
2. Using the appropriate key, unlock and open the toilet tissue dispenser flap.
3. Remove all toilet tissues.
4. Unscrew the Phillips-head screw retaining the toilet tissue dispenser assembly, and remove from its location.
5. Remove pneumatic timer through this opening, taking care to disconnect electric wires.

Note: *Care must be taken to avoid losing the spacers installed on the mounting sleeve.*

6. Reverse the above procedure to reinstall timer. The recommended torque for the lock nut is 15 lbf•ft (21 N•m).

7.8.2 Timer Adjustment

Timer can be adjusted from 0.2 second to 3 minutes by turning the time adjustment screw clockwise to increase time, and counterclockwise to decrease time. To gain access to the time adjustment screw, repeat steps 2, 3, and 4.

7.9 Flush Pump

The submersible-type flush pump is mounted inside an enclosure in the sump tank. The enclosure is provided with a screened side which serves as a strainer to prevent solid matters from entering the pump. The pump requires no periodic maintenance other than cleaning of the strainer side using a water jet introduced through the circular cap opening, once the sump tank is completely drained. The pump can run dry periodically without damage. However, for maximum seal life, the run dry periods should be kept to a minimum.

Caution: *If vehicle is stored for an extended period of time, make sure to clean the strainer as solid matter will tend to pack, and will necessitate replacement of strainer.*

7.9.1 Flush Pump Pressure Adjustment

The flush pump is provided with a manually-adjustable control valve mounted on the flush pump cover and serves to limit flush pump output pressure. To adjust, ask an assistant who will activate the flush pushbutton and check the liquid projection while you manually adjust the control valve.

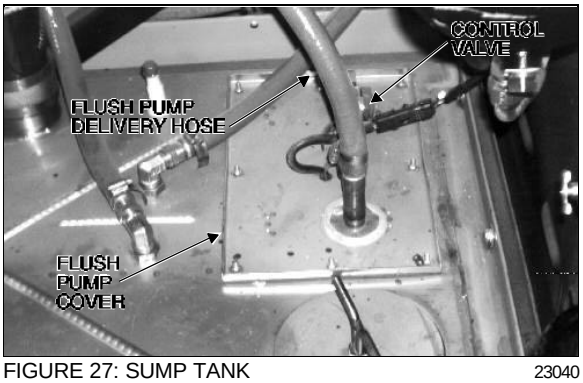

FIGURE 27: SUMP TANK 23040

8. WINDSHIELD WIPERS AND WASHERS

8.1 General Description

Note: *When installing a wiper motor, arm or blade, follow recommended procedures to prevent misalignment, binding or malfunction. Check the windshield washer solvent hoses, fittings and connectors to be sure they are properly connected and seal with no restriction to the flow of washer solvent. Check that the wiper arms have the proper sweep position and the washer nozzles are aimed so that spray is within the proper wiper pattern.*

The windshield wipers are controlled by to electric wiper motors that are accessible for maintenance after raising the appropriate access panel at the front of the coach (for location of the two motors, see figure 28).

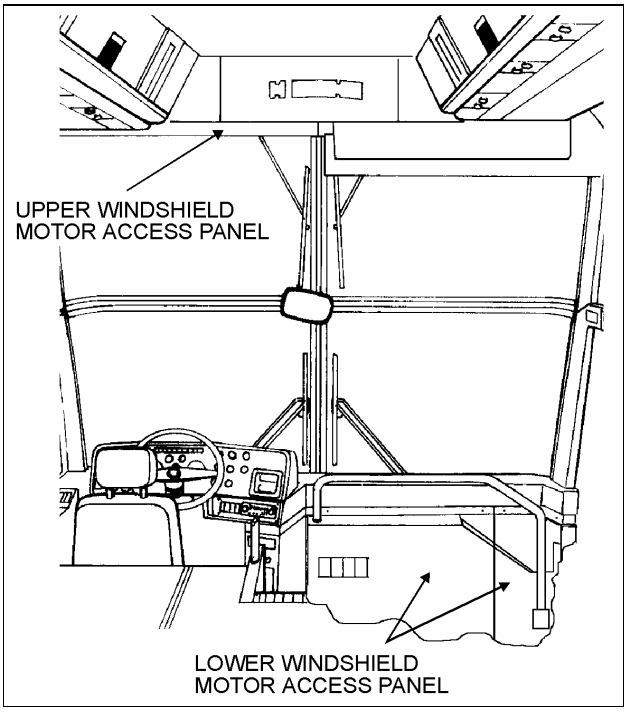

FIGURE 28: MOTOR LOCATION 23084

Each wiper motor is independently operated :

Depress the upper windshield wiper switch located on L.H. dashboard to the first position for intermittent wiping, and to the second position for continuous wiping (1, Fig. 29).

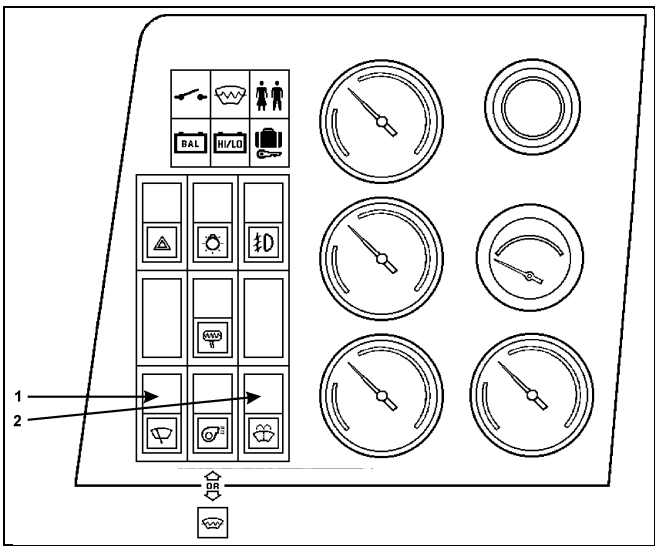

FIGURE 29: L.H. DASHBOARD OEH3B222

Turn the multifunction lever forward to activate lower windshield wipers (2, Fig. 30). The first position operates the wipers at low speed and the second position operates the wipers at high speed. Turning the lever backwards will operate the wipers in the intermittent mode.

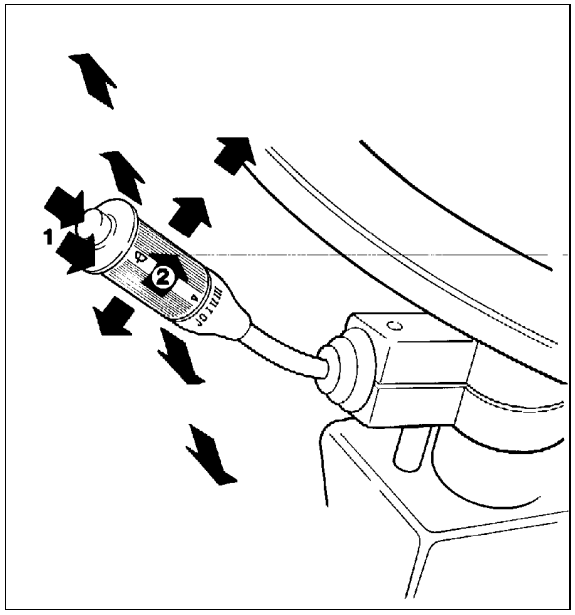

FIGURE 30: MULTIFUNCTION LEVER OEH3B346

Each windshield washer pump is independently operated :

To activate the upper windshield washer pump, depress and hold the rocker switch on L.H. dashboard (2, Fig. 29). The upper wipers will

come on automatically and will shut off a few seconds after releasing the rocker switch.

The lower windshield washer pump is electrically operated and is controlled by a washer control ring on the multifunction lever (1, Fig. 30).

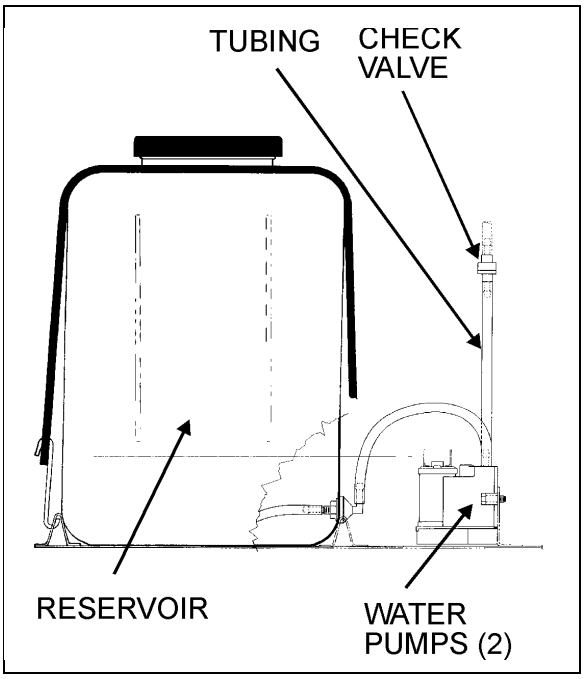

FIGURE 31: WINDSHIELD WASHER 23085

The windshield washer reservoir is located in the front service compartment (Fig. 31). This unit pumps the washer solvent to the spray nozzles where it is dispersed across the windshield. Adjust nozzles with a flat screwdriver as needed to get proper spray coverage.

8.2 Wiper Arm

Check operation of the wipers for proper blade sweep and angle.

Caution: *Do not attempt to manually move the wiper arms to make wiper blade sweep adjustments as damage to the wiper linkage or motor may occur. If it is necessary to adjust the sweep of blades, remove the arms and make adjustment by positioning the arms using serrations on the wiper arm pivot shafts.*

8.2.1 Sweep Adjustment

On a dry windshield, to avoid possible damage to the arm assemblies or wiper motors, hold the wiper arms away from the windshield by inserting a small nail, or other such objet, through the holes at the base of each wiper arm specially drilled for this purpose.

Sweep adjustment is a rough adjustment. It must be followed by Lower or Upper linkage adjustment. See paragraph "8.3 and 8.4".

In order to obtain the **sweep adjustment**, it may be necessary to remove and reposition the wiper arms :

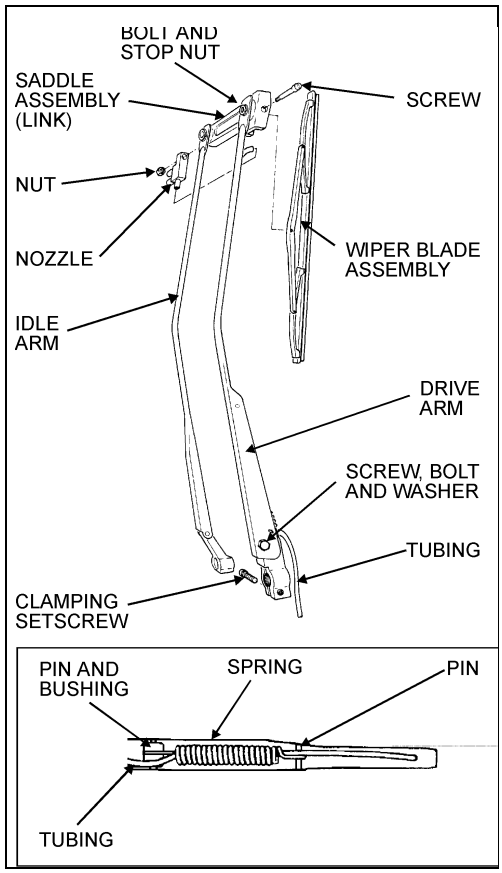

FIGURE 32: LOWER WINDSHIELD WIPER 23086

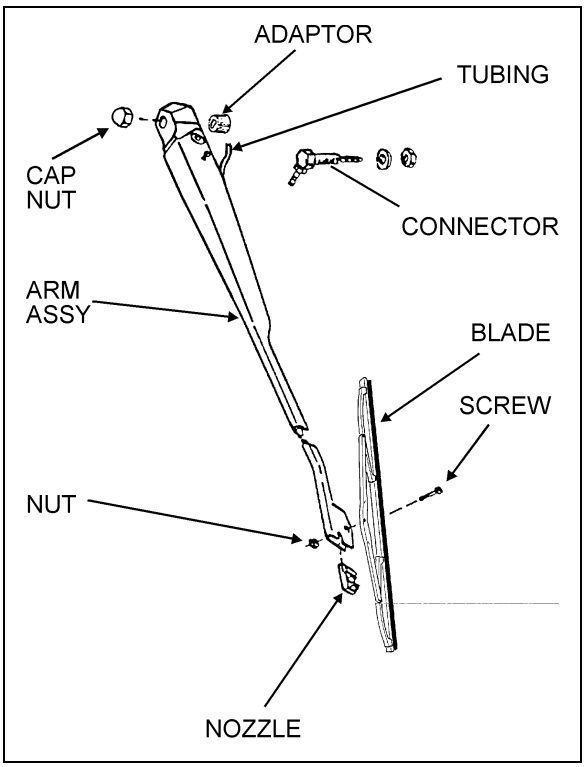

FIGURE 33: UPPER WINDSHIELD WIPER 23087

1. Remove the cap nuts from the wiper arm pivot shafts (Fig. 32 or 33).

2. Disconnect the windshield washer tubing at the base of the wiper arm (Fig. 32 or 33).

3. Lower windshield wiper (Fig. 32) : Loosen the clamping setscrew securing the drive arm to the knurled arm pivot shaft.

4. Remove the drive and idler arms (Fig. 32) or arm assy (Fig. 33).

5. Relocate the drive arm (Fig. 32) or arm assy (Fig. 33) on its knurled pivot shaft to obtain the desired position.

6. Lower windshield wiper (Fig. 32) : Tighten the clamping setscrew to secure the drive arm to the knurled shaft. Fit the idler arm onto the idler arm pivot shaft.

7. Install the cap nut pivot shafts.

8. Connect the windshield washer tubing at the base of the wiper arm (Fig. 32 or 33).

9. Check the adjustment on a wet windshield (Fig. 32 or 33).

8.2.2 Removal

1. Remove the cap nuts from arms (Fig. 32 or 33).

2. Disconnect the windshield washer tubing at the base of the wiper arm (Fig. 32 or 33).

3. Mark the relationship of the arm head to the end of the knurled drive shaft to ensure the original position if the arm is to be reinstalled.

4. Lower windshield wiper (Fig. 32): Loosen the clamping setscrew on the base of the drive arm.

5. Remove the wiper arm assembly (Fig. 32 or 33).

8.2.3 Installation

1. Make sure the wiper motor is in the park position. Lower windshield wiper (Fig. 32): position the wiper arm on the knurled drive shaft and idler arm on the pivot shaft. Upper windshield wiper (Fig. 33): position the wiper arm assy on the knurled drive shaft.

2. If the original arm is reinstalled, align the marks made during removal.

3. Operate the wipers on a wet windshield to check the wiper blade sweep and angle. Readjust as necessary.

4. Lower windshield wiper (Fig. 32): Tighten clamping nut on the drive arm. Install cap nuts to arm shafts (Fig. 32 or 33).

5. Connect the windshield washer tubing at the base of the wiper arm (Fig. 32 or 33).

6. Check the adjustment on a wet windshield (Fig. 32 or 33).

8.3 Lower Linkage Adjustment

1. Make sure the wiper motor is in the park position, prior to working on the linkage.
2. Adjust the two pivot shafts vertically.
3. Adjust rod length of the connecting pivot shafts. During rod length adjustment, maintain the pivot shafts in vertical position.
4. Adjust the rod located between right pivot shaft and motor to a 40.5º angle (Fig. 34). The motor lever must be on the same axle as the rod.
5. Install the right wiper arm in it's normal position (In the middle of the windshield (Fig. 28)). Refer to paragraph "8.2.1 Sweep Adjustment".
6. The right wiper arm final adjustment is made by adjusting the smallest rod length.
7. Install the left wiper arm in it's normal position (In the middle of the windshield (Fig. 28)). Refer to paragraph "8.2.1 Sweep Adjustment".
8. The left wiper arm final adjustment is made by adjusting the longest rod length.
9. Check the adjustment on a wet windshield.

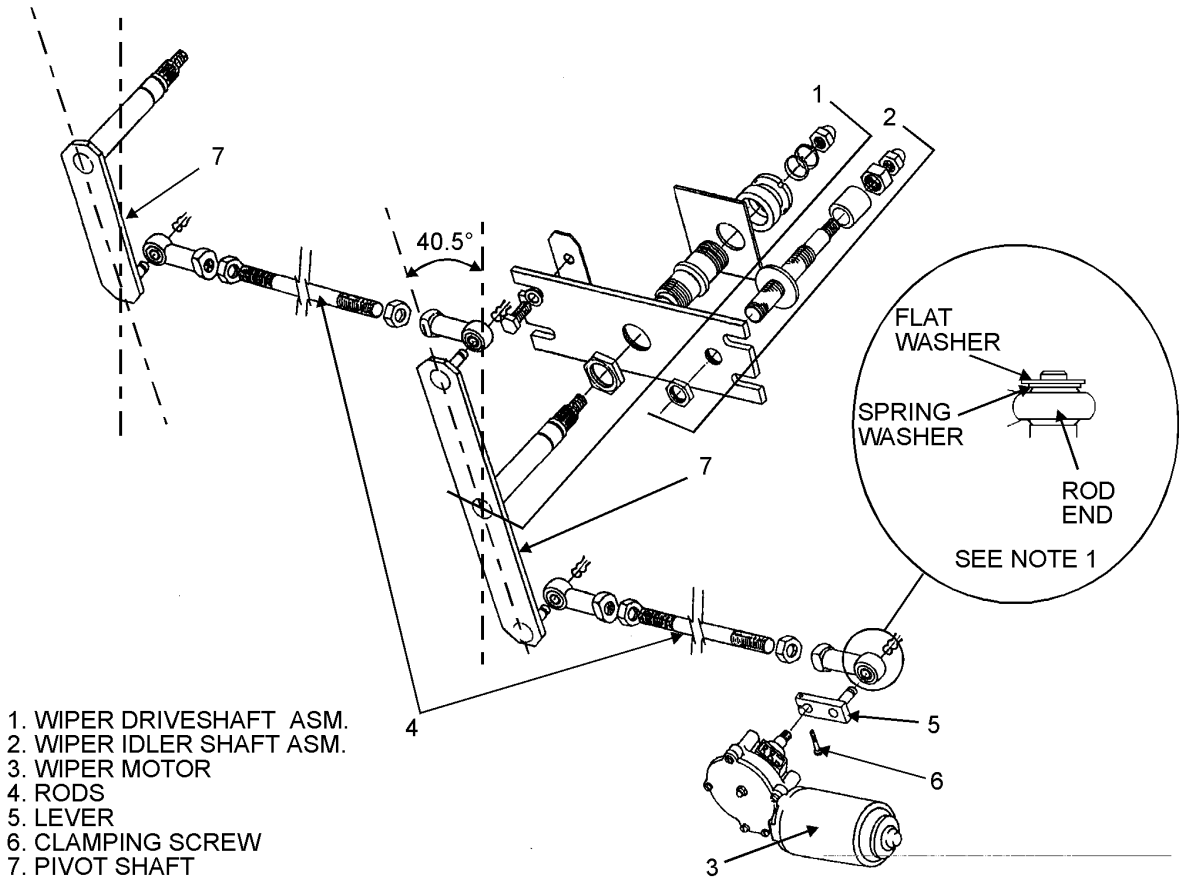

NOTE 1: IF NEEDED, ADD SPRING WASHER (PREVOST #500905) BETWEEN FLAT WASHER AND ROD END TO ELIMINATE GAP.

NOTE 2: IF NEEDED, APPLY GREASE ON EACH JOINT (PREVOST #680735).

FIGURE 34: LOWER WINDSHIELD WIPER INSTALLATION 23088

8.4 Upper Linkage Adjustment

1. Make sure the wiper motor is in the park position, prior to working on the linkage.
2. Adjust rods length (Fig. 35).
3. Install the left wiper arm in it's normal position (In the middle of the windshield (Fig. 28)). Refer to paragraph "8.2.1 Sweep Adjustment".
4. The left wiper arm final adjustment is made by modifying rod length from 8.46 inches (215 mm). Install the right wiper arm in it's normal position (In the middle of the windshield (Fig. 28)). Refer to paragraph "8.2.1 Sweep Adjustment".
5. Install the right wiper arm in it's normal position (In the middle of the windshield (Fig. 28)). Refer to paragraph "8.2.1 Sweep Adjustment".
6. The right wiper arm final adjustment is made by modifying rod length from 23.54 inches (598 mm).
7. Check the adjustment on a wet windshield.

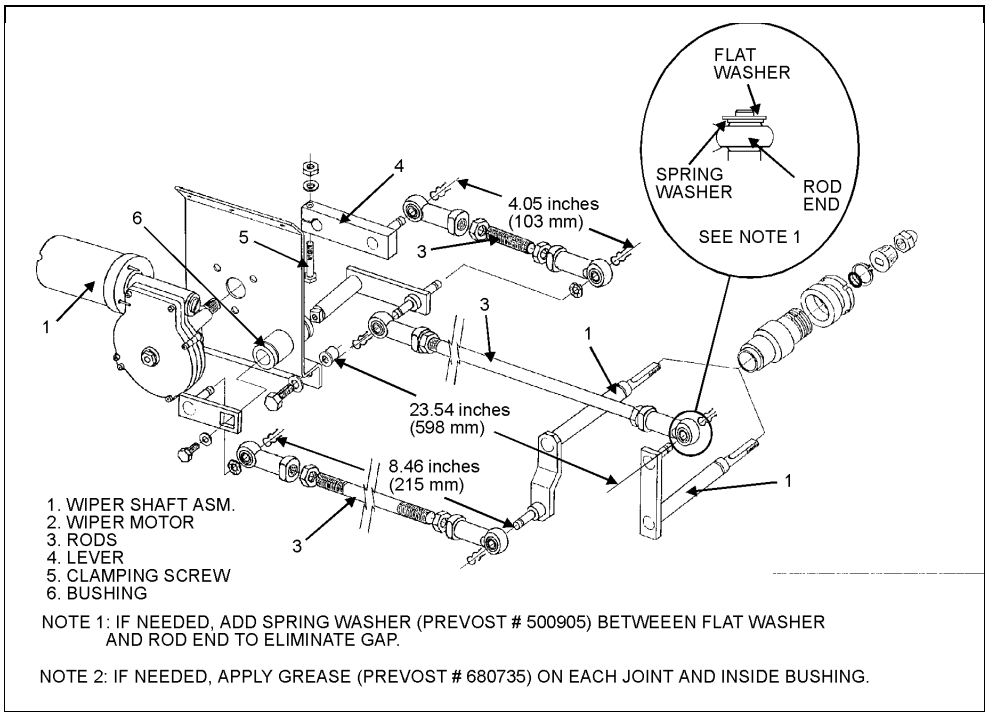

FIGURE 35: UPPER WINDSHIELD WIPER INSTALLATION 23089

8.5 WINDSHIELD WIPER MOTORS

8.5.1 Lower Windshield Wiper Motor Replacement

The lower windshield wiper motor is located at lower front of the vehicle, behind the defroster panel. For motor location, see figure 28.

Warning: *Park vehicle safely, apply parking brake, stop engine and set battery master switch to the "OFF" position prior to working on the vehicle.*

1. Remove the two Phillips-head screws retaining the defroster panel, and remove it.
2. Disconnect wiring connector from the windshield wiper motor.
3. Loosen the clamping screw retaining the lever at the end of the motor driving shaft (Fig. 34).
4. Remove the three bolts that hold the motor to the steel plate.
5. ...Remove the windshield wiper motor (Prévost#800304) and reverse removal procedureto reinstall.

8.5.2 Upper Windshield Wiper Motor Replacement

The upper windshield wiper motor is located above L.H. upper windshield panel (Fig. 28). To remove the motor, it is necessary to remove left sun visor and upper windshield.

Warning: *Park vehicle safely, apply parking brake, stop engine and set battery master switch to the "OFF" position prior to working on the vehicle.*

1. Pull out the wiring connector (black and red wires) located on left side of sun visor, and disconnect it.
2. Remove the two Phillips-head screws at the bottom end of the sun visor's arms.
3. Remove the two Phillips-head screws on each side of the roller, and pull out away the sun visor.
4. Remove the Phillips-head screws retaining the upper windshield panel.
5. If equipped with blower defroster, loosen hose clamp to remove air duct from hose.
6. Disconnect wiring connector from the windshield wiper motor.
7. Loosen the bolt retaining the lever at the end of the motor driving shaft (Fig. 35).
8. Remove the three bolts that hold the motor to the steel plate.
9. Remove the windshield wiper motor (Prévost #800304) and reverse removal procedure to reinstall.

9. TROUBLESHOOTING

SYMPTOM	PROBABLE	CAUSE REMEDY
FAILS TO EMIT WASHER	A. Reservoir empty.	A. Add proper fluid.
	B. If below 32ºF (0ºC) improper washer fluid-frozen.	B. Store coach or parts in heated area. Then purge system with low-temperature solution.
	C. Contamination in tubing or nozzles.	C. Remove with compressed air. If severely clogged, replace items.
	D. Tubing damage.	D. Replace section.
	E. Tubing bent (kinked) or off one or more connections.	E. Realign tubing and/or refit. Trim end to ensure proper fit or replace.
INADEQUATE EXPULSION	A. Tubing failure.	A. Replace tubing.
SLOW OPERATION	A. Improper solution.	A. Replace with proper type solution.
	B. Jet stream improperly directed.	B. Reposition nozzles.
	C. Check valve is stuck in the open position.	C. Remove, clean or replace.

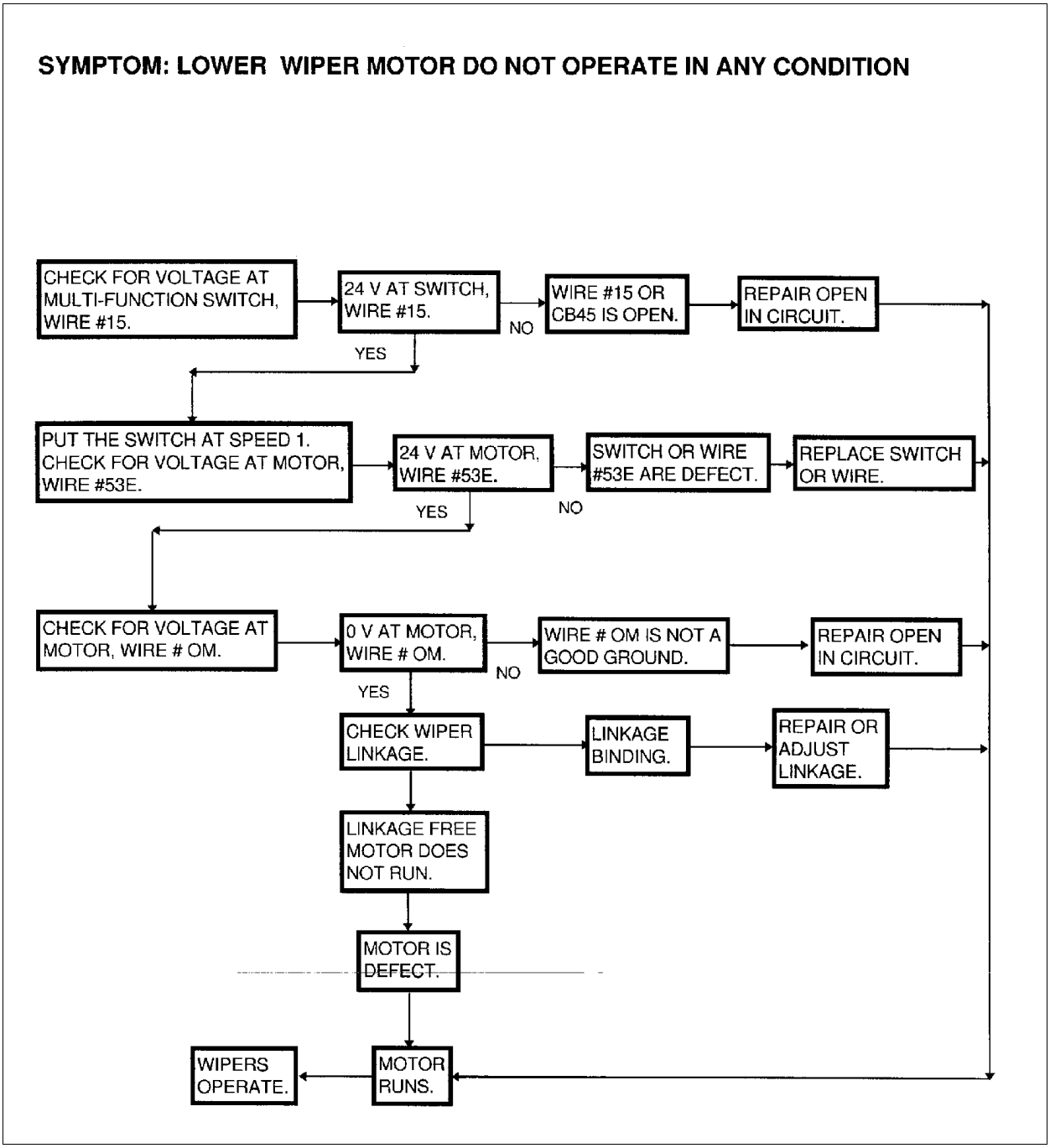

FIGURE 36: TROUBLESHOOTING 23062

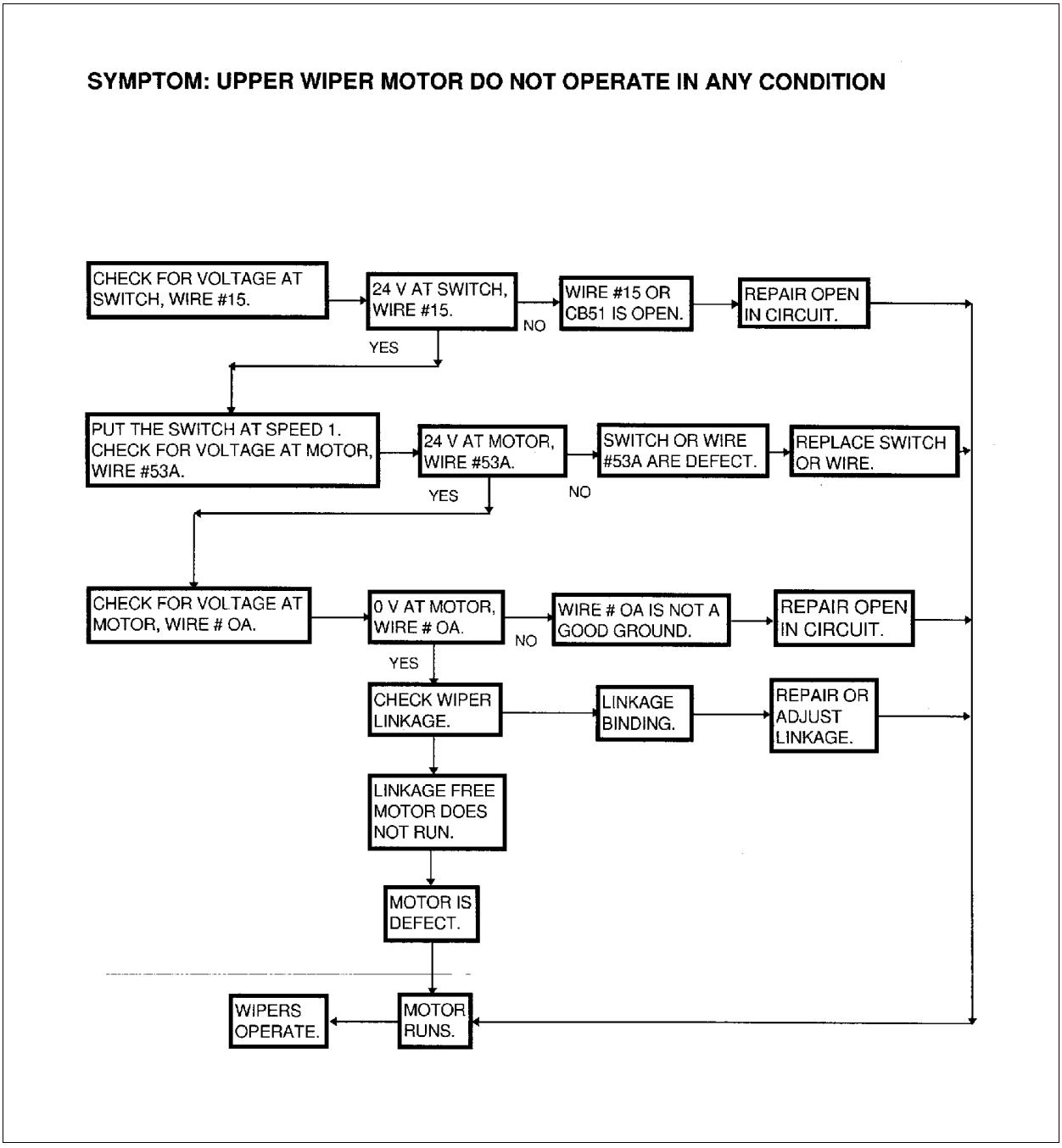

FIGURE 37: TROUBLESHOOTING 23063

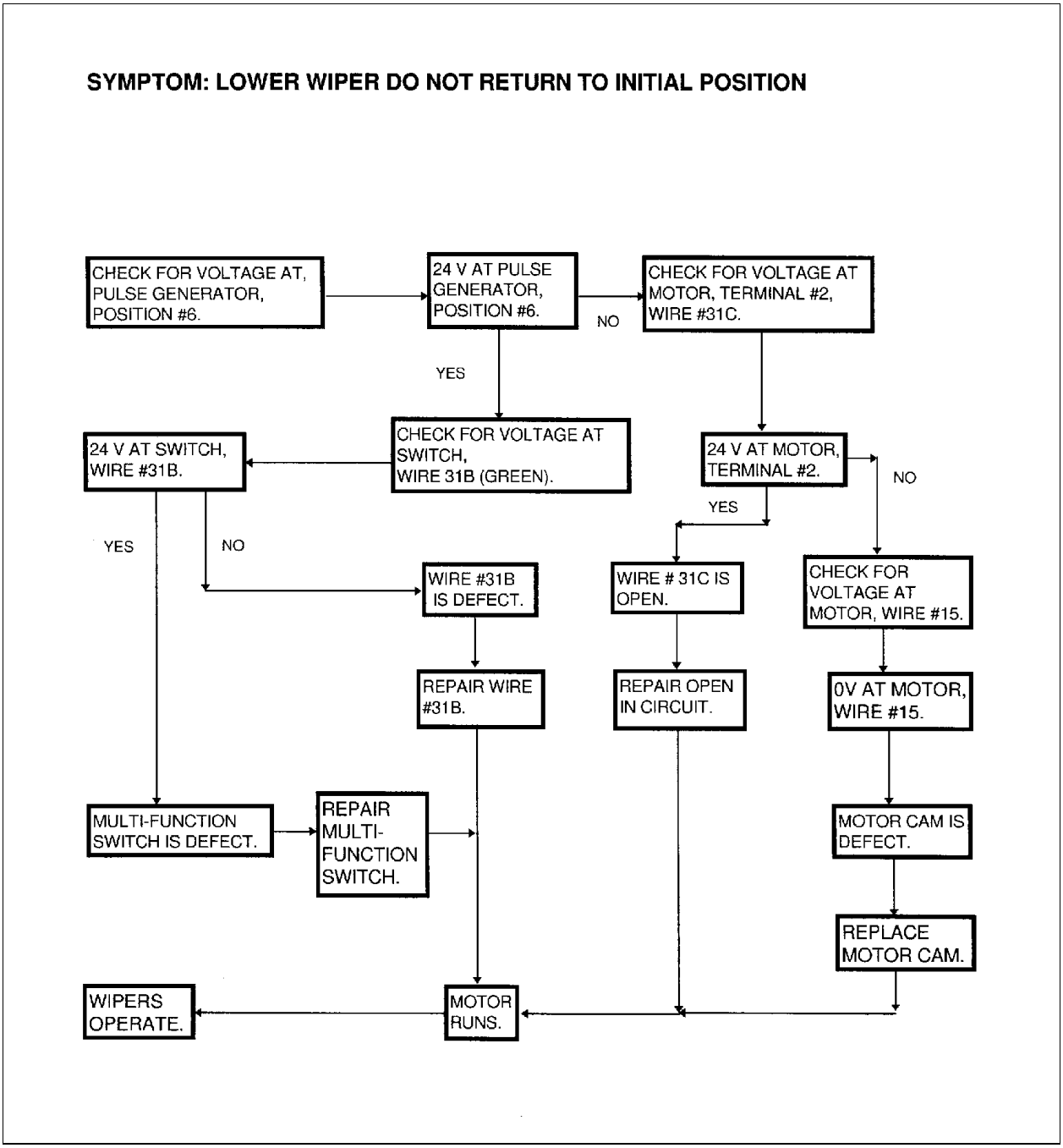

FIGURE 38: TROUBLESHOOTING 23064

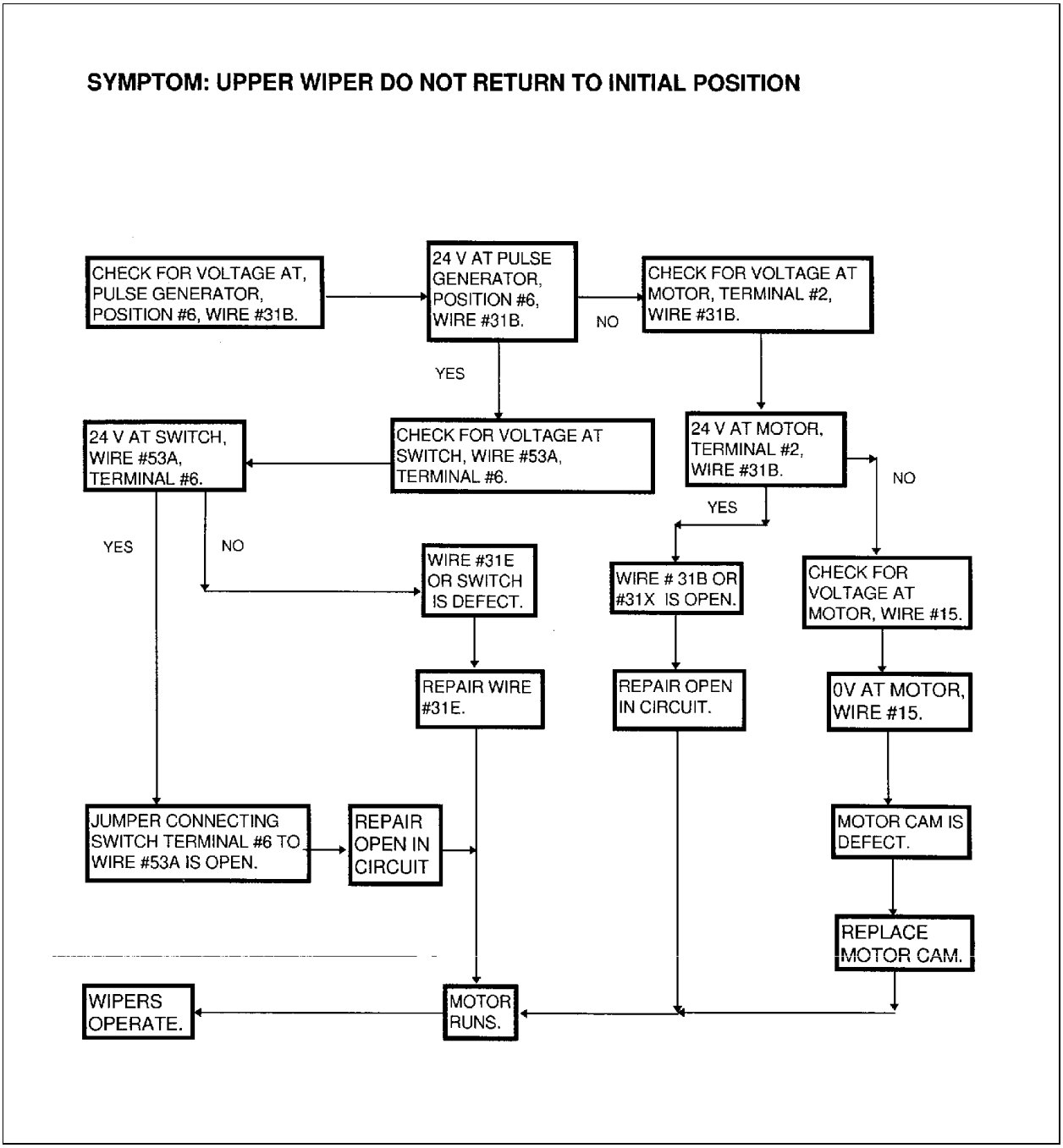

FIGURE 39: TROUBLESHOOTING 23065

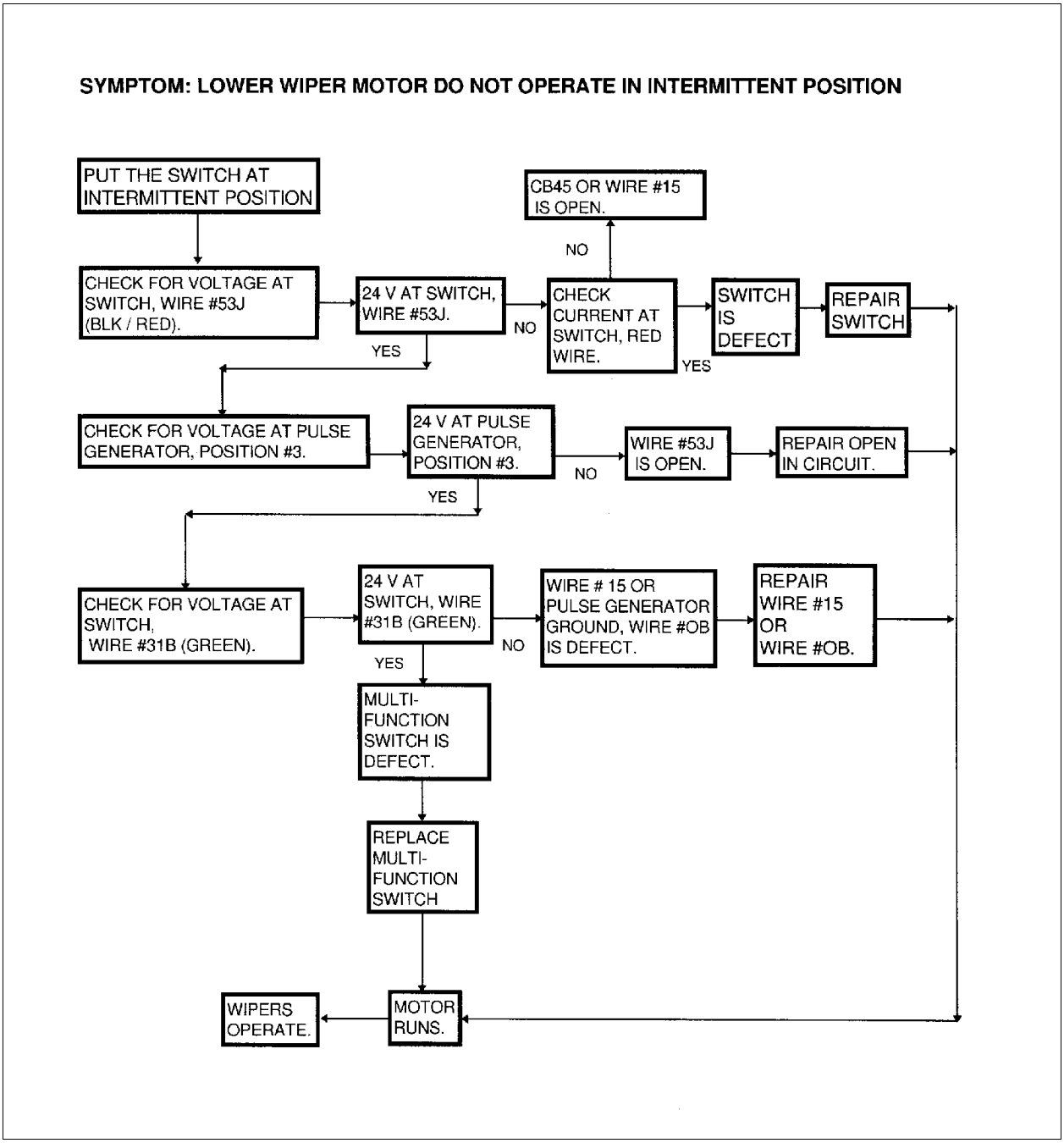

FIGURE 40: TROUBLESHOOTING 23066

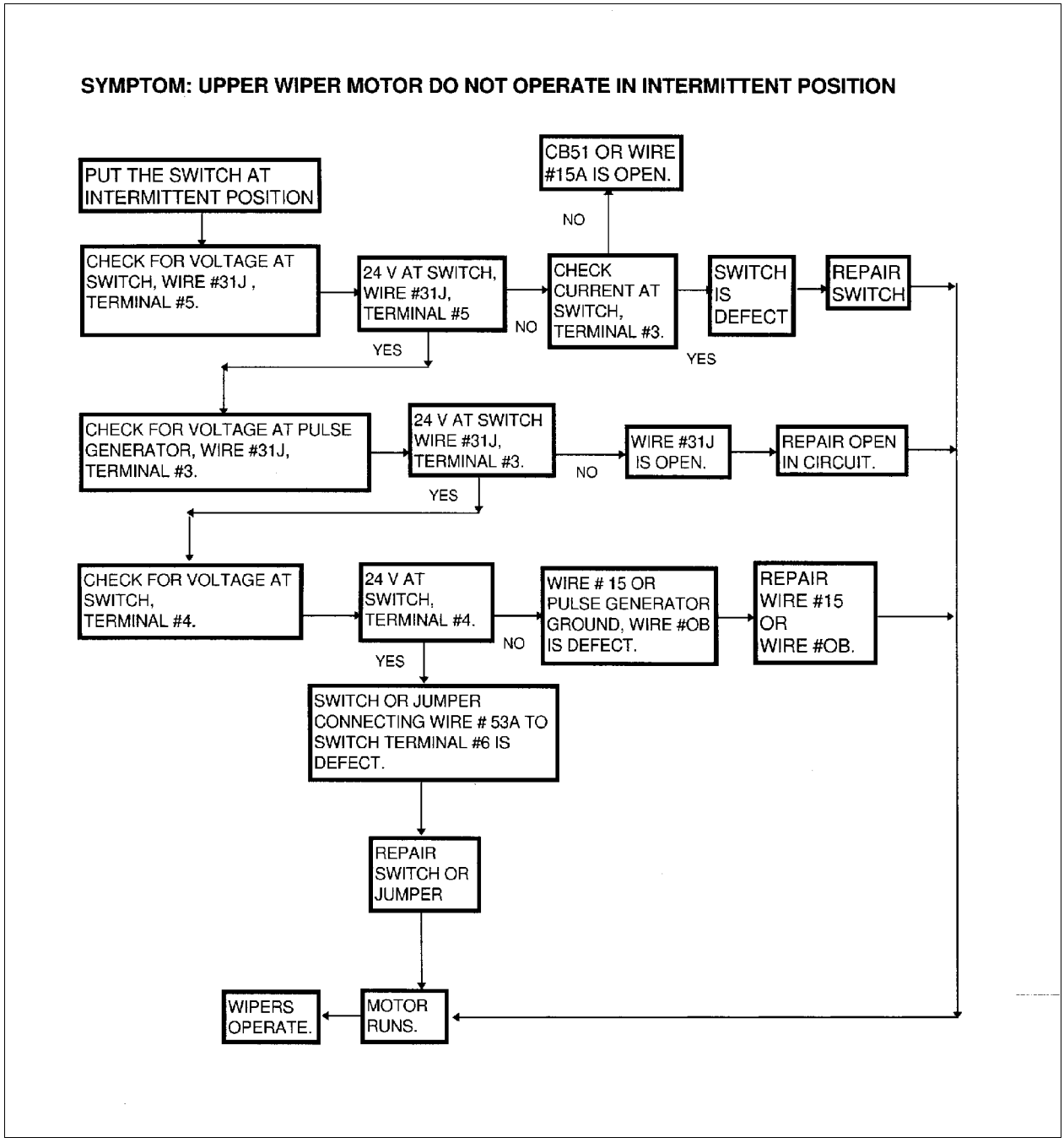

FIGURE 41: TROUBLESHOOTING …23067

SYMPTOM: LOWER WIPER MOTOR DO NOT OPERATE WHEN WINDSHIELD WASHER MOTOR IS ACTIVATED.

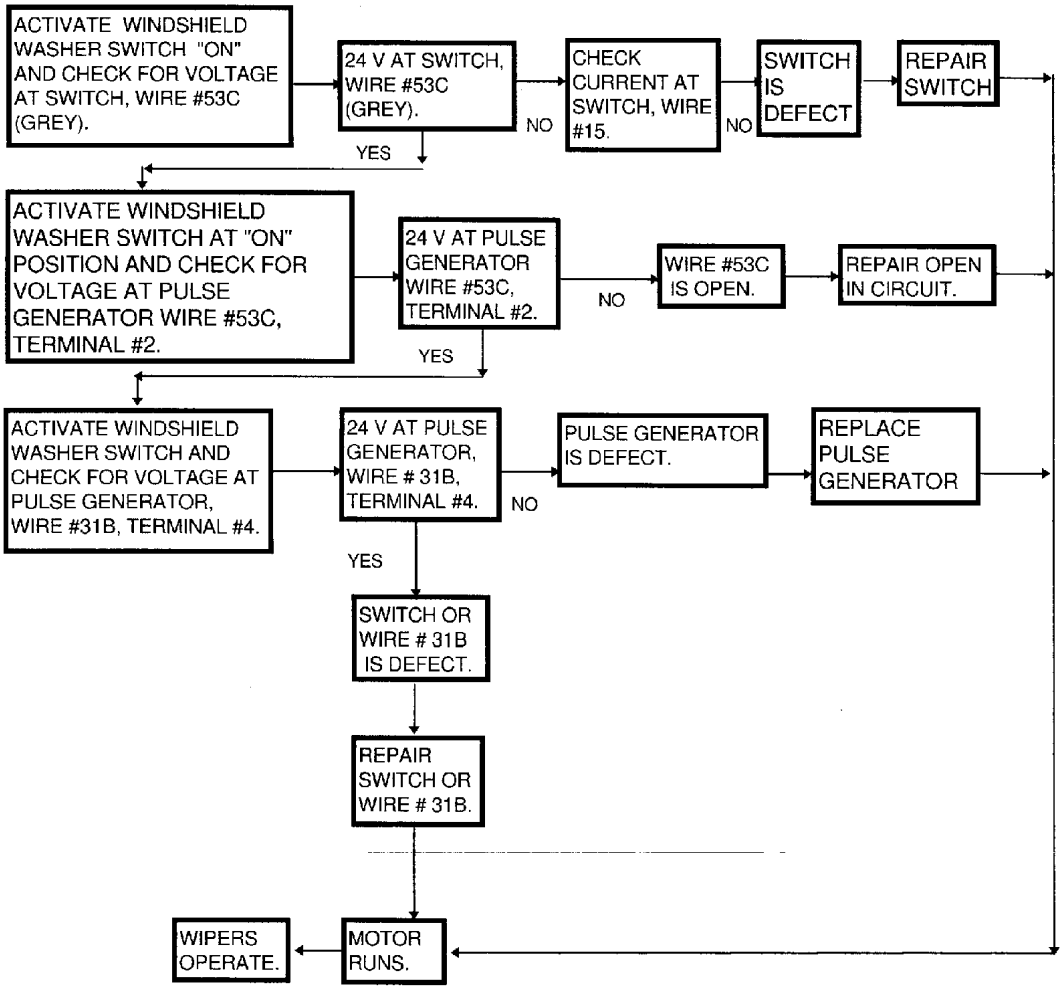

FIGURE 42: TROUBLESHOOTING 23068

SYMPTOM: UPPER WIPER MOTOR DO NOT OPERATE WHEN WINDSHIELD WASHER MOTOR IS ACTIVATED.

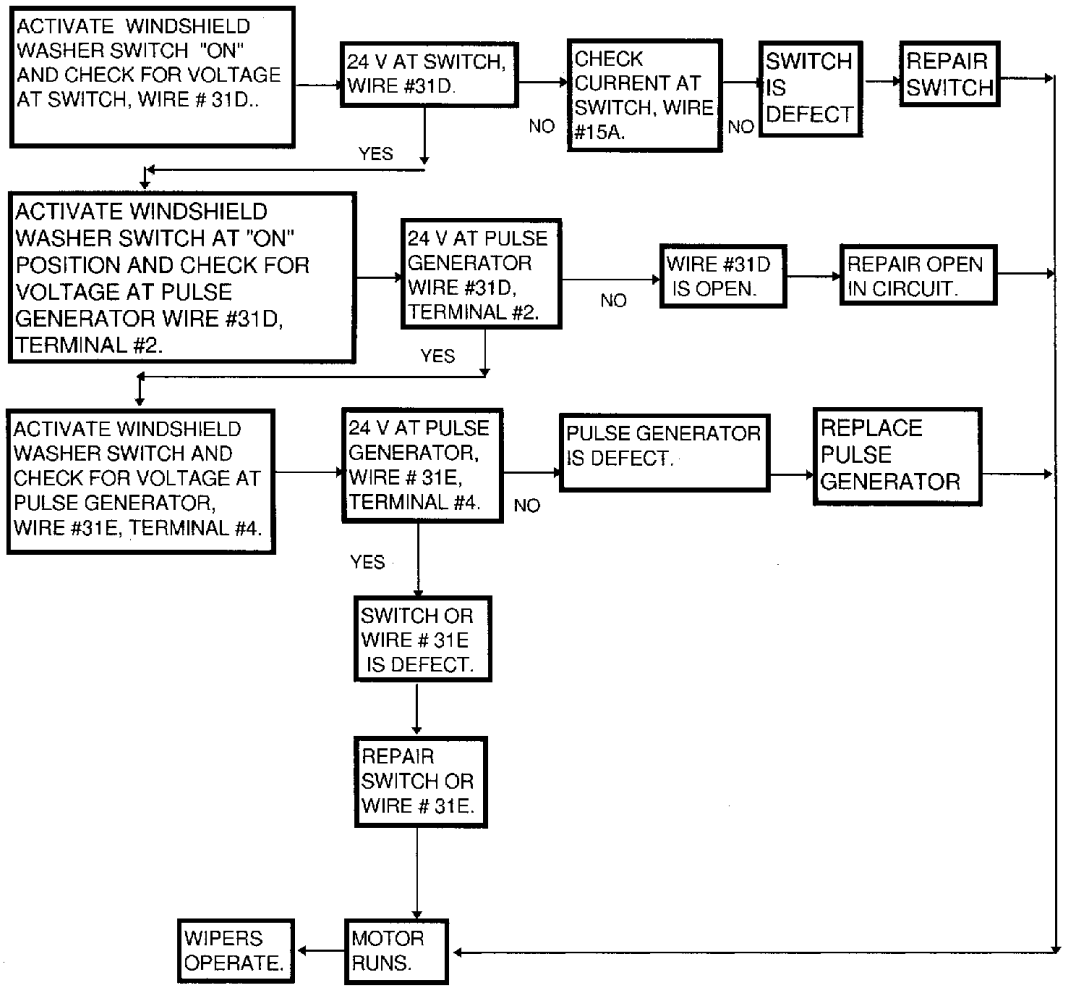

FIGURE 43: TROUBLESHOOTING 23069

10. SPECIFICATIONS

Am/Fm Radio Cassette Player

Make .....Panasonic
Model CQ-45EUC
Power source ..... 12 V
Supplier number (REI) 700484
Prévost number..... 900811

Amplifier
Make .....R.E.I.
Model AMP-2000
Power source ..... 24 V D.C. negative ground
Current .....8 amps maximum
Frequency Response.....10-30,000 Hz
Output ..... 90 watts/channel maximum power
65 watts/channel RMS at 4 ohm @ 0.5 T.H.D.
Signal to noise ratio 86dB
Supplier number..... 700189
Prévost number..... 900802

Backup PA Module
Make .....R.E.I.
Supplier number..... 700246
Prévost number..... 900804

Backup PA Amplifier
Make .....R.E.I.
Supplier number..... 700251
Prévost number..... 900805

Control Unit
Make .....R.E.I.
Model C-2000
Supplier number..... 700227
Prévost number..... 900803

Speaker
Make ..... Bosh
Max. power ..... 90 watts
RMS power ..... 40 watts
Freq. .....45-2400 Hz
Impedance .....4 ohms
Magnet weight.....15 ozs
Mounting depth .....2.2 inches
Supplier number..... RPSPKR54
Prévost number..... 900765

6 Disc CD Changer
Make..... R.E.I.
Supplier number 700467
Prévost number 900822

12 Disc CD Changer
Make..... R.E.I.
Supplier number 700473

Video Tape Recorder
Make..... R.E.I.
Supplier number 700454
Prévost number 900806

Karaoke
Make..... R.E.I.
Supplier number 700470
Prévost number 900815

Karaoke Inverter
Make..... R.E.I.
Input Voltage .....24 V
Output Voltage .....110 V
Max. Load.....150 watts
Supplier number 700463
Prévost number 900816

TV Monitor
Make..... R.E.I.
Power Source 24V
Supplier number 700182
Prévost number 900809

TV Tuner
Make..... R.E.I.
Power Source .....24 V
Supplier number 700471
Prévost number 900814

Refrigerator
Make.....Norcold
Capacity ..... 4 ft^3
Supplier number DE-390
Prévost number 900738

Refrigerator
Make.....Norcold
Capacity ..... 2.5 ft^3
Supplier number DE-351
Prévost number 900741

Receiver, Wire Less Microphone
Make .....R.E.I.
Supplier number..... 480067
Prévost number..... 900813

Transmitter, Wire Less Microphone
Make .....R.E.I.
Supplier number..... 480066
Prévost number..... 900812

Hubodometer (US model: miles)
Make ..... Stemco
Supplier number..... 650-0593
Prévost number..... 650002

Hubodometer (Canada model: km)
Make ..... Stemco
Supplier number..... 650-0025
Prévost number..... 650117

Destination Sign Fluorescent Tube
Make .....General Electric
Length..... 30" (76 cm)
Outside diameter..... 1" (25 mm)
Wattage 20
Color .....Cool white
Quantity 1
Supplier number..... F30T8 CW4
Prévost number..... 830120

Lavatory Ventilation Fan Motor
Make .....Aurora
Type.....RG500EF
Voltage.....24 V DC
Rotation .....Right hand
Supplier number..... 131.40.50
Prévost number..... 870844

Lavatory Fluorescent Tubes
Model ..... F15T8 CW
Length..... 18" (45 cm)
Wattage 15
Quantity 2
Prévost number..... 830102

Emergency Buzzer
Make ..... Cole Hersee Co.
Voltage.....24 V
Supplier number..... 40224
Prévost number..... 562117

Fresh Water Tank
Make.....Prévost
Capacity ..... 18 US gal (68 liters)
Prévost number 403030

Fresh Water Tank Heater
Make..... Hot Watt
Wattage .....75 W
Voltage .....115 V AC
Supplier number .....EM 37-5
Prévost number 562018

Flush Push Button Pneumatic Timer
Make.....Furnas
Type .....Resettable
Time ..... 0,2 to 180 seconds
Supplier number 55-AA
Prévost number 900348

Flush Pump
Make..... Jabsco
Model number.....30240-0024
Power source .....24 V
Capacity ..... 1750 GPH
Prévost number 900496

SECTION 24: LUBRICATION

CONTENTS

1. DESCRIPTION 24-2
2. BREAK-IN PERIOD MAINTENANCE 24-2
3. ENGINE OIL CHANGE 24-2
4. AUTOMATIC TRANSMISSION OIL CHANGE 24-2
5. FLEXIBLE HOSE MAINTENANCE 24-2
6. DAILY WALK-AROUND INSPECTION 24-5
   - 6.1 Outside the Vehicle 24-5
   - 6.2 Engine Compartment 24-5
   - 6.3 Inside the Vehicle 24-6
7. LUBRICATION AND SERVICING SCHEDULE 24-7
   - 7.1 Service Every 6,250 Miles (10 000 km) or Twice a Year, Whichever Comes First 24-7
   - 7.2 Service Every 12,500 Miles (20 000 km) or Once a Year, Whichever Comes First 24-8
   - 7.3 Service Every 25,000 Miles (40 000 km) or Once a Year, Whichever Comes First 24-8
   - 7.4 Service Every 50,000 Miles (80 000 km) or Once a Year, Whichever Comes First 24-9
   - 7.5 Service Every 100,000 Miles (160 000 km) or Once Every Two Years, Whichever Comes First. 24-9
   - 7.6 Miscellaneous Service 24-10
8. LUBRICANT SPECIFICATIONS 24-11
9. PART NUMBER SPECIFICATIONS 24-12

LIST OF ILLUSTRATIONS

FIG. 1: LUBRICATION AND SERVICING COMPONENTS 24-4

1. DESCRIPTION

The efficiency and life of mechanical equipment is largely dependent upon proper lubrication and servicing. All mechanical components rely on a lubrication film between the moving parts to reduce friction, prevent wear, help cool the contacting sliding parts, and keep dirt and wear particles away from mating parts. Proper lubrication depends upon using the right type of lubricant, at proper intervals and filling to proper capacities. Past experience shows that many service problems can be traced to an improper lubricant or to incorrect lubrication procedures.

A comprehensive maintenance and lubrication program is important to ensure the long service life this vehicle was designed for and to avoid costly repairs and associated down timescaused by premature part failure. The lubrication schedule in this section gives the location of the key service points on the vehicle as well as the lubricant specifications for each component to be serviced. Specific instructions on how to check and service major components are covered in their respective sections in this maintenance manual. The recommended lubrication intervals are based on normal operating conditions and mileage accumu-lation. Shorten the intervals if vehicle ope-rates in more severe conditions. Some parts and equipment referred to in the lubri-cation schedule are optional and may not be installed on your vehicle. Dispose of used lubricants and filters in an environmentally res-ponsible manner, according to federal and/or local recommendations.

2. BREAK-IN PERIOD MAINTENANCE

Perform the following maintenance after the initial 3,000 miles (4 800 km) of operation. Then perform at the recommended intervals in the lubrication schedule.

1. Drain differential oil and refill with clean oil.*
2. Drain manual transmission oil and refill with clean oil.*
3. Replace standard coolant strainer** and optional coolant filter/conditioner.
4. Replace automatic transmission oil filter and oil.*
5. Lubricate front axle knuckle pins, bushings, tie rod ends, and ball studs of drag link.
6. Drain the radiator fan drive gearbox, preferably while warm, and refill with clean oil.

* Also perform after 3,000 miles (4 800 km) following a major repair.

** Also perform after 3,000 miles (4 800 km) following soldering work done at any point of the cooling system.

3. ENGINE OIL CHANGE

The engine oil change intervals are related to the operating conditions such as vehicle load and speed, and may vary. Prévost recommends that engine oil and filter change be performed at every 12,500 miles (20 000 km). Check the oil daily with engine stopped. If necessary, add sufficient oil to raise the level to the proper mark on the dipstick.

4. AUTOMATIC TRANSMISSION OIL CHANGE

Change the fluid and internal filters after the first 3,000 miles (4 800 km). Thereafter, oil and filters change should be performed every 25,000 miles (40 000 km) or once a year, whichever comes first. Note that the operating conditions may shorten the oil and filters service intervals. Fluid must be changed whenever there is evidence of dirt or high temperature condition, which would be indicated by discoloration, strong odor, or fluid analysis.

5. FLEXIBLE HOSE MAINTENANCE

The performance of any vehicle is directly related, among other things, to the ability of flexible hoses to supply lubricating oil, air, coolant and fuel. Maintenance of hoses is an important step to ensure efficient, economical and safe operation of the vehicle.

Check hoses daily as part of the walk-around inspection. Examine hoses for leaks, check all fittings, clamps, and ties carefully. Ensure that hoses are not resting or touching shafts, couplings, heated surfaces including exhaust manifold, any sharp edges, or other obviously damaging areas. Since all equipment vibrates to a certain extent, clamps and ties can wear with time. To ensure proper support, inspect fasteners frequently and tighten or replace them as necessary.

Investigate leaks immediately to determine if fittings have loosened or cracked, and if hoses have ruptured or worn through. Take corrective action immediately. Leaks are not only potentially detrimental to vehicle operation, but can also result in added expenses caused by the need to replace fluids.

Warning: *Personal injury and/or property damage may result from fire due to the leakage of flammable fluids, such as fuel or lube oil.*

The useful service life of a hose is determined by the temperature and pressure of the fluid within it, the time in service, its installation, the ambient temperatures, amount of flexing, and the vibration it is subjected to. With this in mind, we recommend that all hoses be thoroughly inspected at least every 50,000 miles (80 000 km) or once a year for surface damages or indication of damaged, twisted, worn, crimped, brittled, cracked, or leaking lines. Hoses having the outer surface worn through or damaged metal reinforcement should be considered unfit for further service.

It is also recommended that all hoses on this vehicle be replaced during major overhaul and/or after a maximum of five years with hoses of equal or superior quality, compared with the original.

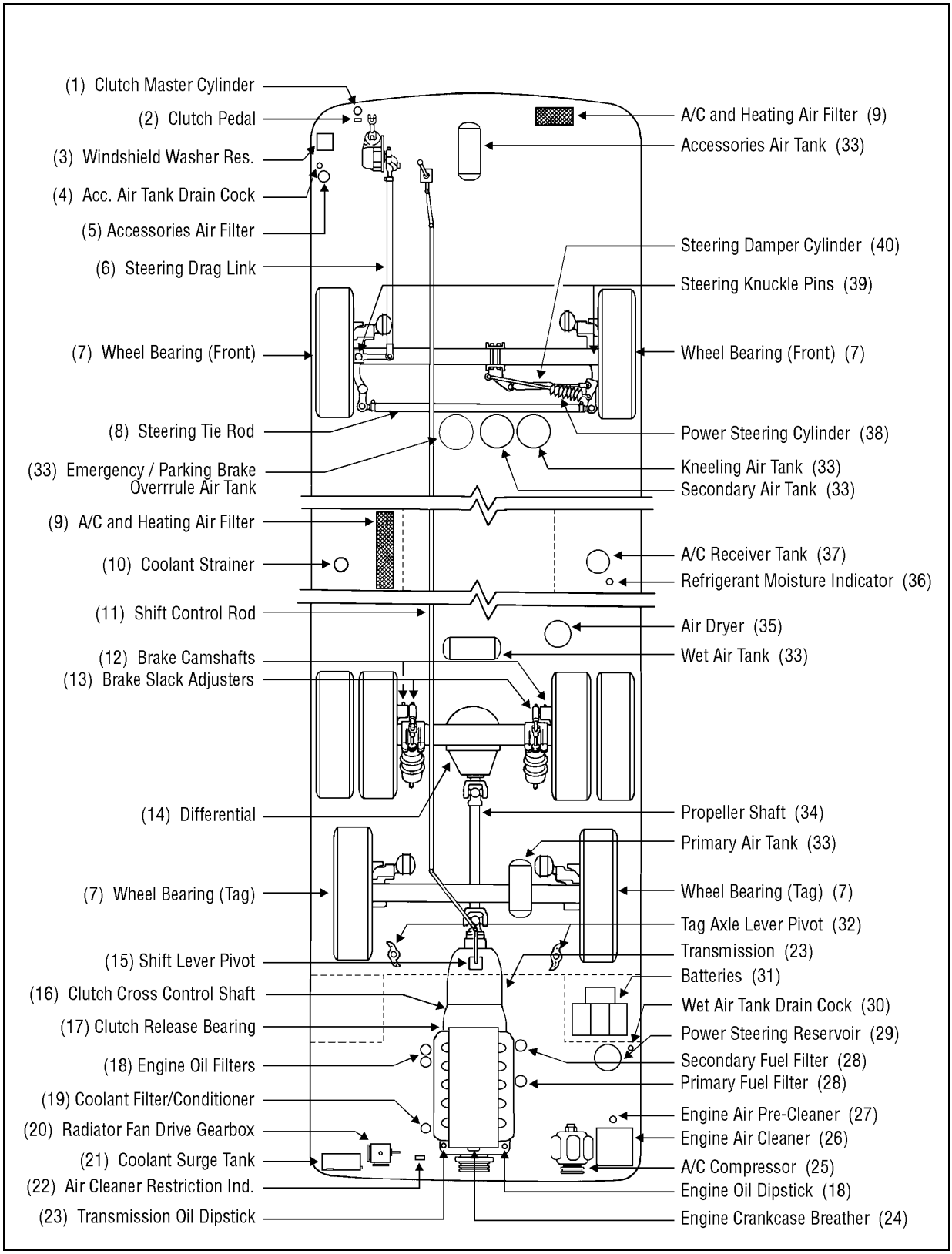

FIGURE 1: LUBRICATION AND SERVICING COMPONENTS 24002

6. DAILY WALK-AROUND INSPECTION

It is a good practice to make a basic visual inspection of key areas on the vehicle on a daily basis and to report any problem areas to maintenance personnel for immediate correction. For H3-45 VIP vehicle, perform this walk-around inspection before every trip.

6.1 Outside the Vehicle

ITEM*	DESCRIPTION
---	Check for leaks under vehicle and in engine compartment
---	Check that baggage and service compartment doors close properly
---	Inspect tires and wheels for correct tire pressure, wear or damage, and for missing wheel stud and nuts
3	Check windshield washer fluid level and add if necessary
---	Check condition of windshield wiper blades
---	Verify proper operation of all road lights, signal lights, brake lights, marker lights, and back-up lights; Replace light bulbs as required
4-30	Drain accumulated water in accessory and wet air tanks
7	Check oil level. Oil level must be maintained to the level mark in the sight glass. If oil is not visible throught the sight glass, general purpose gear lubricant SAE 90 (A.P.I. spec. GL5) must be added.

6.2 Engine Compartment

ITEM*	DESCRIPTION
18	Check engine crankcase oil level; Add if necessary
23	Check transmission oil level (automatic transmission oil level can be checked from push-button shift selector); Add if necessary
29	Check power steering reservoir fluid level; Add if necessary
21	Check coolant surge tank fluid level; Add if necessary
28	Drain accumulated water in primary fuel filter/water separator (if equipped)
22-26	Check air cleaner restriction indicator, replace air cleaner when red signals locks in full view

* Item numbers refer to figure 1, on page 24-4 of this section.

6.3 Inside the Vehicle

ITEM	DESCRIPTION
---	Check for proper operation of the entrance door
---	Inspect cleanliness in the steps, aisles, seating area, and lavatory
---	Check that emergency exit windows and roof escape hatches can be opened, then close all windows and hatches securely
---	Verify proper operation of windshield wiper/washer
---	Check rear view mirrors for broken glass; Adjust mirrors for adequate rear view vision
---	Start engine and check for proper operation of all gauges and indicator lights
---	Check for proper operation of electric and air horns, and back-up alarm
---	Apply brakes and check both primary and secondary pressure gauges.

7. LUBRICATION AND SERVICING SCHEDULE

7.1 Service Every 6,250 Miles (10 000 km) or Twice a Year, Whichever Comes First.

ITEM*	DESCRIPTION	REMARKS	LUBRICANT &/OR PART**
26	Engine Air Cleaner	Inspect and clean, replace element if required	Filter: #530197
27	Engine Air Pre-cleaner	Check discharge tube	----------
25	A/C Compressor	Check oil level, add if necessary	Castrol Icematic SW-68 (POE)
37	A/C Receiver Tank	Check refrigerant level, add if necessary	HFC 134a
36	Refrigerant Moisture Indicator	Replace filter dryer unit according to moisture indicator	Filter: #452497
14	Differential	Check oil level, add if necessary	Multigrade gear oil
20	Radiator Fan Drive Gearbox	Check oil level, add if necessary	Synthetic oil: ISO VG 460
34	Propeller Shaft	Grease one fitting on each universal joint and one fitting on slip joint	Multi purpose grease
32	Tag Axle Lever Pivot	Grease one fitting on each pivot	Multi purpose grease
13	Brake Slack Adjuster	Grease one fitting on each slack adjuster (drive axle only)	Multi purpose grease
40	Steering Damper Cylinder	Grease one fitting at cylinder rod end	Multi purpose grease
38	Power Steering Cylinder	Grease one fitting at each cylinder end	Multi purpose grease
39	Steering Knuckle Pins	Grease two fittings on each knuckle	Multi purpose grease
8	Steering Tie Rod Ends	Grease one fitting at each end	Multi purpose grease
6	Steering Drag Link Ends	Grease one fitting at each end	Multi purpose grease
23■	Manual transmission	Check oil level, add if necessary	Heavy-duty engine oil meeting MIL-L-2104-C: SAE 30 (Northern climate), SAE 40, SAE 50 Straight mineral gear oil: SAE 80 (Northern climate), SAE 90
15■	Shift Lever Pivot	Grease one fitting	Multi purpose grease
16■	Clutch Cross Control Shaft	Grease three fittings	Multi purpose grease
17■	Clutch Release Bearing	Grease one fitting	Multi purpose grease
---	Alternator Drive Belt	Check belt for wear & also check tension on belt. Refer to "Section 06, Electrical"	----------

* Item numbers refer to figure 1, on page 24-4 of this section.
** See end of this section for lubricant and part number specifications.
■ With manual transmission only.

7.2 Service Every 12,500 Miles (20 000 km) or Once a Year, Whichever Comes First.

ITEM*	DESCRIPTION	REMARKS	LUBRICANT &/OR PART**
18	Engine	Change oil and filters	Engine oil: SAE 15W40, API CF4 Filters: #510458
28	Fuel Filters	Change primary and secondary fuel filters (Fill with clean fuel before installation)	Primary: #510137 Prim. w/sep.: #531390 or #531407 Secondary: #510128
19	Coolant Filter/Conditioner	See "7.6 Miscellaneous Service"	----------
21	Coolant Surge Tank	Test coolant solution	----------
33	Air Tanks	Drain accumulated water in all tanks	----------
9	A/C and Heating Air Filters	Clean or replace two elements	Driver's: #871049 Passenger's: #871051
1■	Clutch Master Cylinder	Check oil level	Brake Fluid (DOT 3)

7.3 Service Every 25,000 Miles (40 000 km) or Once a Year, Whichever Comes First.

ITEM*	DESCRIPTION	REMARKS	LUBRICANT &/OR PART**
23	Automatic Transmission	Change oil and filters	Dexron-IIE or Dexron-III
2■	Clutch Pedal	Check and adjust if necessary	----------
11■	Shift Control Rod Universal Joints	Grease four fittings	Multi purpose grease
---	Radiator Core	Inspect core exterior. Clean if necessary (dry with compressed air). See "Section 05, under "6.1 Maintenance".	----------

* Item numbers refer to figure 1, on page 24-4 of this section.

** See end of this section for lubricant and part number specifications.

■ With manual transmission only.

7.4 Service Every 50,000 Miles (80 000 km) or Once a Year, Whichever Comes First.

ITEM*	DESCRIPTION	REMARKS	LUBRICANT &/OR PART**
23■	Manual Transmission	Change oil	Engine oil: SAE 30, 40, 50 or Gear oil: SAE 80, 90
20	Radiator Fan Drive Gearbox	Change oil	Synthetic oil: ISO VG 460
29	Power Steering Reservoir	Replace oil filter cartridge element	Cartridge: #660987
10	Coolant Strainer	Check and clean, change cartridge if required	Cartridge: #871029
24	Engine Crankcase Breather	Clean breather steel mesh	----------
---	Preheater (WEBASTO) Fuel Filter	Replace fuel filter. Test coolant solution	Filter : #871037
---	Flexible Hose	Thoroughly inspect all hoses (see p.24-2)	----------

7.5 Service Every 100,000 Miles (160 000 km) or Once Every Two Years, Whichever Comes First.

ITEM*	DESCRIPTION	REMARKS	LUBRICANT &/OR PART**
14	Differential	Change oil; Clean breathers	Multigrade gear oil
5	Accessories Air Filter	Change filter element	Filter: #641252
35	Air Dryer	Change cartridge	Cartridge: #641278
12	Brake Camshaft	Grease one fitting on each drive axle drum brake	Multi purpose grease
1■	Clutch Master Cylinder	Drain oil and refill	Brake Fluid (DOT 3)

* Item numbers refer to figure 1, on page 24-4 of this section.

** See end of this section for lubricant and part number specifications.

■ With manual transmission only.

7.6 Miscellaneous Service

ITEM*	DESCRIPTION	REMARKS	LUBRICANT &/OR PART**
21	Cooling System	Drain, flush and refill every two years or 200,000 miles (320 000 km) whichever comes first	Engine coolant
31	Battery Terminals	Clean and coat terminals yearly	Battery terminal coating
---	Discharge Tubes***	Every three months: Check 2 condenser's discharge tubes Check 6 evaporator's discharge tubes Check 2 front discharge tubes	----------
19	Coolant Filter/Conditioner	Replace Precharge Element Filter with a Maintenance Element Filter after 12,500 miles (20 000 km) or after one year, whichever comes first. Then, install a new Maintenance Element Filter and replace every 200,000 miles (320 000 km) or two years, whichever comes first. Note: Every time the cooling system is flushed, drained & cleaned, you must first install a Precharge Element Filter for its required lifespan: then install a Maintenance Element Filter.	Maintenance Filter: #550630 Precharge Filter: #550629

* Item numbers refer to figure 1, on page 24-4 of this section.

** See end of this section for lubricant and part number specifications.

*** Discharge tubes are rubber tubes located under vehicle.

8. LUBRICANT SPECIFICATIONS

ITEM*	DESCRIPTION	SPECIFICATIONS
4	Engine Oil	SAE Viscosity Grade: 15W40 API Classification: CG4
29	Power Steering Oil	Automatic Transmission Oil (Dexron-IIE or Dexron-III)
21	Engine Coolant	Low silicate, ethylene glycol coolant 50% antifreeze/water solution is normally used Antifreeze concentration should be between 30% and 67%
25	A/C Compressor Oil	Polyolester Oil, HFC 134a compatible: Castrol SW-68 (POE) or equivalent
14	Differential Oil	Multigrade gear oil meeting MIL-L-2105-D: 80W/90 for Northern climate 85W/140 for Southern climate (In extreme conditions or for better performance, full synthetic gear oil can be used.)
20	Fan Gearbox Oil	Synthetic oil: ISO VG (viscosity grade) 460 Mobil SHC 634 or equivalent
23	Automatic Transmission Oil	Dexron-IIE or Dexron-III
23	Manual Transmission Oil	Heavy-duty engine oil meeting MIL-L-2104-C: SAE 30 (Northern climate), SAE 40, SAE 50 Straight mineral gear oil: SAE 80 (Northern climate), SAE 90
1	Clutch Oil	Heavy-duty brake fluid meeting DOT 3 specifications
7	Oil Type Wheel hubs	General purpose gear lubricant SAE 90 (A.P.I. spec. GL5)
---	Multi Purpose Grease	Good quality lithium-base grease: NLGI No.2 Grade is suitable for most temperatures NLGI No.1 Grade is suitable for extremely low temperatures

* Item numbers refer to figure 1, on page 24-4 of this section.

9. PART NUMBER SPECIFICATIONS

ITEM*	DESCRIPTION	PRÉVOST NO	SUPPLIER NO
18	Engine Oil Filters	#510458	Detroit Diesel: 25014505 AC Rochester Div. GM: PF2100
29	Power Steering Reservoir Oil Filter	#660528	Garrison Hydraulic: 32516
26	Engine Air Cleaner Filter	#530197	Nelson: 70337-N Baldwin: PA-2839 Donaldson: P52-2874 Fram: CA-7113
36	Refrigerant Filter Dryer Unit	#452497	Alco Controls: EKH 307S (modified)
28	Engine Primary Fuel Filter	#510137	Detroit Diesel: 25014274 AC Rochester Div. GM: TP-915D
28	Engine Primary Fuel Filter with Water Separator (optional)	#531390	Detroit Diesel: 25011910 AC Rochester Div. GM: TP-1057
28	Engine Secondary Fuel Filter	#510128	Detroit Diesel: 25014342 AC Rochester Div. GM: TP-916D
19	Engine Coolant Filter/Conditioner	Maintenance: #550630 Precharge : #550629	Maintenance: Detroit Diesel: 23507545 Nalco Chemical Company: DDF3000 Precharge: Detroit Diesel. 23507189 Nalco Chemical Company: DDF60
9	A/C and Heating Driver's Air Filter	#871049	Permatron Corp.: Model "R"
9	A/C and Heating Passenger's Air Filter	#871051	Permatron Corp.: Model IN-1
23	Automatic Transmission Oil Filter Kit	#571687	Allison: 29503829
10	Coolant Strainer	#871029	Parker: 925566
5	Accessories Air Filter	#641252	Cowper (Norgren): 2992-18
35	Air Dryer Cartridge	#641278	Rockwell Wabco: S 432 923 2
---	Preheater (WEBASTO) Fuel Filter	#871037	Webasto: 603.359

* Item numbers refer to figure 1, on page 24-4 of this section.