SECTION 00: GENERAL INFORMATION

CONTENTS

1. FOREWORD 00-2

2. SCHEMATICS 00-2

3. PRECAUTIONS TO BE OBSERVED BEFORE WELDING 00-2

4. SAFETY NOTICE 00-4

4.1 DATA PLATES AND CERTIFICATIONS 00-4
4.1.1 Engine 00-4
4.1.2 Transmission 00-4
4.1.3 Drive Axle 00-5
4.1.4 Front Axle 00-5
4.1.5 Power Steering Pump 00-5
4.1.6 Coach Final Record 00-5
4.1.7 Safety Certification 00-5
4.1.8 DOT Certification Label 00-5
4.1.9 EPA Engine Label 00-6
4.1.10 Fuel Tank Label 00-6
4.1.11 Vehicle Identification Number (VIN) 00-6

5. FASTENER STRENGTH IDENTIFICATION 00-8

5.1 SELF-LOCKING FASTENERS 00-9
5.2 RECOMMENDATIONS FOR REUSE 00-9
5.3 SIX LOBED SOCKET HEAD 00-9

ILLUSTRATIONS

FIGURE 1 : DETROIT DIESEL SERIES 60 00-4
FIGURE 2: WORLD TRANSMISSION 00-4
FIGURE 3: ZF-ASTRONIC TRANSMISSION 00-5
FIGURE 4: TYPICAL SERIAL & MODEL NUMBERS 00-5
FIGURE 5: TYPICAL SERIAL & MODEL NUMBERS 00-5
FIGURE 6: ISS TYPICAL SERIAL & MODEL NUMBERS 00-5
FIGURE 7 : POWER STEERING PUMP NAMEPLATE 00-5
FIGURE 8: DOT CERTIFICATION PLATE 00-6
FIGURE 9 : ENGINE COMPARTMENT 00-6
FIGURE 10 : VEHICLE I.D. 00-6
FIGURE 11 : VEHICLE IDENTIFICATION NUMBER 00-7
FIGURE 12 : THREAD NOTATION 00-8
FIGURE 13: BOLT STRENGTH MARKINGS 00-8
FIGURE 14 : SELF-LOCKING FASTENERS 00-9
FIGURE 15: METRIC - US STANDARD CONVERSION TABLE 00-10
FIGURE 16: CONVERSION CHART 00-11

1. FOREWORD

This manual includes procedures for diagnosis, service, maintenance and repair for components of the XL2 series coach or bus shell model listed on the front cover page. This manual should be kept in a handy place for ready reference by the technician. If properly used, it will meet the needs of the technician and owner.

Information provided in Section 1 through 24 pertains to standard equipment items, systems and components as well as the most commonly used optional equipment and special equipment offered on the coach models covered by this manual. At the beginning of each section: a Table of Contents and a list of illustrations give the page number on which each subject begins and where each figure is located. Coach operating information is provided in a separate Operator's Manual. Audio/Video system operator instructions are also included in a separate manual.

More specific information on engine and transmission operating, maintenance, and overhaul information is contained in the applicable engine or transmission service manual published by the engine or transmission manufacturer. Engine and transmission parts information is contained in the applicable engine or transmission parts catalog published by the engine or transmission manufacturer. All information, illustrations and specifications contained in this manual are based on the latest product information available at the time of publication approval. The right is reserved to make product changes at any time without notice.

NOTE
Typical illustrations may be used; therefore minor illustration difference may exist when compared to actual parts or other publications.

Prévost Car occasionally sends Maintenance Information, Warranty Bulletins, Safety Recalls or other literature to update users with the latest service procedures. They are issued, when required, to supplement or supersede information in this manual. Update sheet should be filled out and bulletins should be filed at the end of their respective section for future reference.

2. SCHEMATICS

Vehicle AIR SCHEMATICS are provided at the end of Section 12, "Brake". SUSPENSION AIR SCHEMATICS are provided at the end of Section 16, "Suspension". Moreover, ELECTRICAL SCHEMATICS are provided in the technical publications box. Refer to those schematics for detailed circuit information or during diagnosis.

3. PRECAUTIONS TO BE OBSERVED BEFORE WELDING

⚠ CAUTION ⚠
Cut off battery power in main power compartment using battery safety switch.

1. Disconnect *"Ground"* cables from battery terminals.

NOTE
Disconnect "Ground" cables only.

2. If welding must be done near the dashboard i.e. steering column, you must disconnect all electronic control modules (radio & control head, HVAC, TTLT cluster Volvo). You must also disconnect alternator module located in front service compartment.
3. Disconnect three wiring harness connectors from ECM (Electronic Control Module). The ECM is mounted on the starter side of the engine.
4. For vehicles equipped with an Allison automatic transmission, disconnect three wiring harness connectors from ECU (Electronic Control Unit). The ECU is located in front service compartment.
5. For vehicles equipped with WCL system, disconnect electronic controller connector.
6. For vehicles equipped with ABS (Anti-Lock Brake System), disconnect wiring harness connectors from ABS Electronic Control Unit. The ABS Electronic Control Unit is located in front service compartment.
7. Cover electronic control components and wiring to protect from hot sparks, etc.
8. Do not connect welding cables to electronic control components.
9. Do the appropriate welding on vehicle.

⚠ CAUTION ⚠
Position welding machine ground clamp as close as possible to the work.

10. When welding is complete, reconnect ECM, ECU, ABS electronic control units, etc.
11. Terminate by reconnecting *"Ground"* cables to battery terminals.

STEEL – STEEL WELDING

⚠ CAUTION ⚠

Before welding, disconnect electronic modules and battery terminals.

NOTE

Welding surfaces must be free of scale, slag, rust, paint, grease, humidity or other foreign material that would render welding impossible.

⚠ WARNING ⚠

Only a qualified and experienced person must do welding.

- FCAW (Flux Cored Arc Welding) process ;
- Electrode wire conforms to A5.20 AWS (American Welding Society) specifications ;
- E4801T-9-CH, type electrode wire with 0,045“ diameter (1,14 mm) ;

Material Thickness	Voltage	Current	Wire Feed Rate	Shielding Gas
1/8” to ½”	26 ± 2 volts	260 Amps	450 ipm. approx.	75% argon – 25% CO2 or 100% CO2

If necessary and with great care to prevent perforating the material, it is possible to use a conventional electric arc welding machine according to the following specifications:

- SMAW (Shielded Metal-Arc Welding) process ;
- Welding rod conforms to A5.1 of AWS (American Welding Society) specifications; E 7018 type welding rod with 1/8” diameter (3,2 mm).
- Current: 100 amperes to 150 amperes; optimum at 120 amps.

It is important to grind weld bead starts and stops and also to grind arc strikes from surfaces.

STEEL - STAINLESS STEEL OR STAINLESS STEEL - STAINLESS STEEL WELDING

⚠ CAUTION ⚠

Before welding, disconnect electronic modules and battery terminals.

NOTE

Welding surfaces must be free of scale, slag, rust, paint, grease, humidity or other foreign material that would render welding impossible.

⚠ WARNING ⚠

Only a qualified and experienced person must do welding.

- GMAW (Gas Metal-Arc Welding) process;
- Welding wire conforms to AWS (American Welding Standards) A5.9 specifications;
- 308LSi type welding wire with 0.035" diameter (0,9 mm);

STEEL - STAINLESS STEEL WELDING

Steel Thickness	SS Thickness	Voltage	Current	Wire Feed Rate	Shielding Gas
Less than 1/8”	Any type	20±1.5 volts	130±15 Amps	290 ipm approx.	90% He, 7.5% Ar, 2.5% CO2
1/8” and more	Any type	22±1.5 volts	160±15 Amps	330 ipm approx.	90% He, 7.5% Ar, 2.5% CO2

STAINLESS STEEL - STAINLESS STEEL WELDING

SS Thickness	Voltage	Current	Wire Feed Rate	Shielding Gas
Any type	20 ± 1.5 volts	130 ± 15 Amps	290 ipm approx.	90% He – 7.5% Ar, 2.5% CO2

If necessary and with great care to prevent perforating the material, it is possible to use a conventional electric arc welding machine according to the following specifications :

- SMAW (Shield Metal-Arc Welding) process;
- Welding rod conforms to AWS (American Welding Standards) A5.4 specifications; 308L-17 type welding rod with 3/32" diameter (2,4 mm);
- Current: - 50 amperes to 90 amperes, optimum at 60 amperes.

It is important to grind weld bead starts and stops and also to grind arc strikes from surfaces.

4. SAFETY NOTICE

This maintenance manual has been prepared in order to assist skilled mechanics in the efficient repair and maintenance of PRÉVOST vehicles.

This manual covers only the procedures as of manufacturing date.

Safety features may be impaired if other than genuine PRÉVOST parts are installed.

Torque wrench tightening specifications must be strictly observed. Locking devices must be installed or replaced by new ones, where specified. If the efficiency of a locking device is impaired, It must be replaced.

This manual emphasizes particular information outlined by the wording and symbols:

⚠ WARNING ⚠

Identifies an instruction which, if not followed, could cause personal injuries.

⚠ CAUTION ⚠

Outlined an instruction which, if not followed, could severely damage vehicle components.

NOTE

Indicates supplementary information needed to fully complete an instruction. Although, the mere reading of such information does not eliminate the hazard, understanding of the information will promote its correct use.

4.1 DATA PLATES AND CERTIFICATIONS

Delay and confusion can be avoided by placing the complete vehicle identification number of the coach and the serial numbers of the engine on parts orders and correspondence. Also, the transmission, axles, power steering pump chassis and other major components are identified by serial numbers.

4.1.1 Engine

The engine serial and model numbers are stamped on the cylinder block (as viewed from the flywheel end) on the left side just below the fire deck and above the cast-in Detroit Diesel logo (Fig. 1).

In addition, option plates made of laminated paper are located on the rocker cover (starter side). The engine serial and model number and a list of the optional engine equipment is written on the option plate. Refer to this information when ordering replacement parts (Fig. 1).

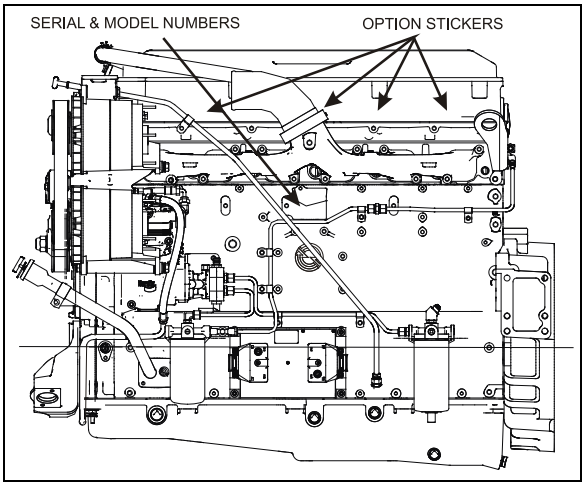

FIGURE 1 : DETROIT DIESEL SERIES 60 00043

4.1.2 Transmission

The transmission identification plate is located on the fluid level dipstick side of the transmission (WT) or on transmission, on the vehicle R.H. side (ZF) (Fig. 2 & 3). The identification plate shows the transmission serial number, part number (assembly number), and model number. Use all three numbers when ordering parts.

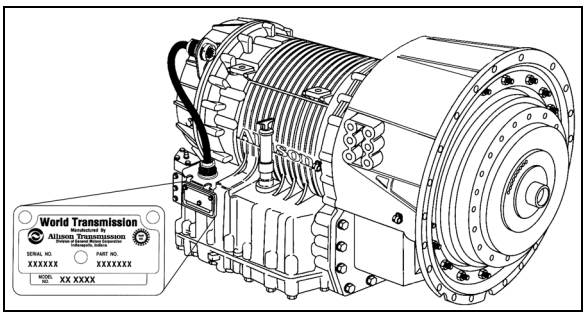

FIGURE 2: WORLD TRANSMISSION 07076

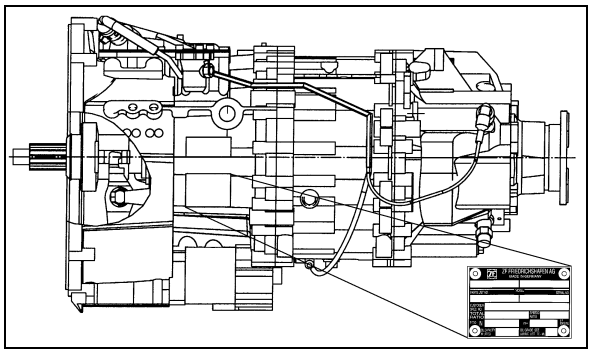

FIGURE 3: ZF-ASTRONIC TRANSMISSION 00040

4.1.3 Drive Axle

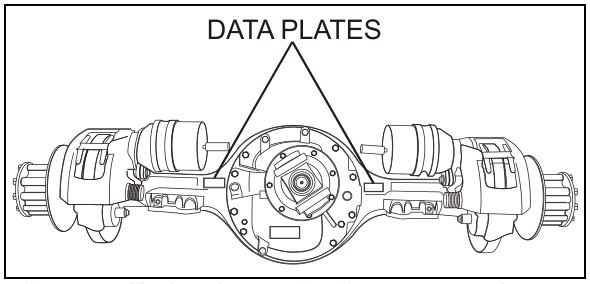

FIGURE 4: TYPICAL SERIAL & MODEL NUMBERS 11019

4.1.4 Front Axle

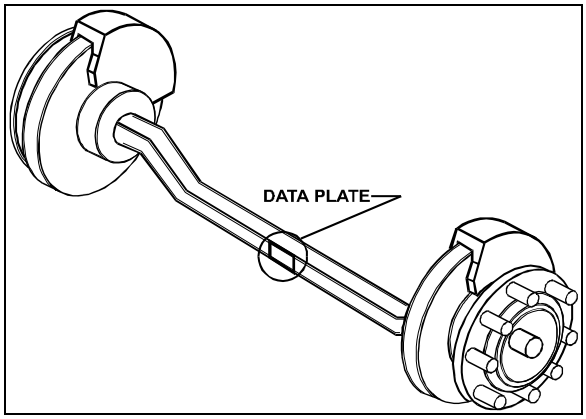

FIGURE 5: TYPICAL SERIAL & MODEL NUMBERS 10024

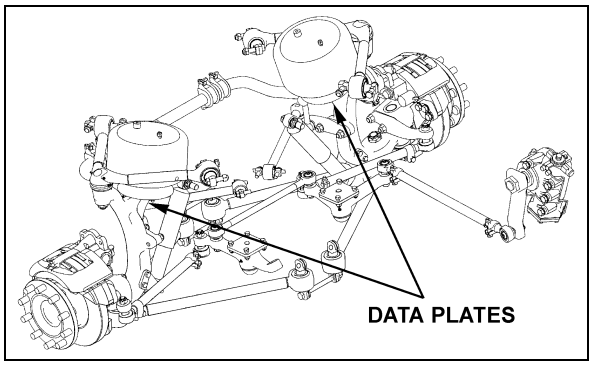

FIGURE 6: ISS TYPICAL SERIAL & MODEL NUMBERS

4.1.5 Power Steering Pump

Power steering pump serial number is located on a tag on the pump (Fig. 7). The pump is mounted on the engine beside the crankshaft pulley.

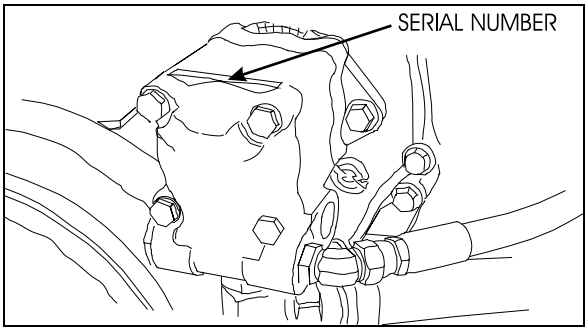

FIGURE 7 : POWER STEERING PUMP NAMEPLATE 00035

4.1.6 Coach Final Record

The Coach Final Record is a record of all data pertaining to the assembly of the coach. This record is included in the technical publication package supplied with the coach. Retain this record in the company records office for reference and safe-keeping.

4.1.7 Safety Certification

Coach components meet specifications and standards as follows:

- Material and parts conform to ASTM and/or SAE standards in effect at the time of manufacture.

- All factory-installed interior materials meet FMVSS 302 for fire resistance.

- Certified according to Provincial, State and Federal Safety standards (Canadian and US) BMCSS, FMVSS, and CMVSS.

Other applicable certification labels are affixed to the component.

4.1.8 DOT Certification Label

This certifies that coaches manufactured by Prevost Car Inc., comply with all Federal Motor Vehicle Safety Standards at the time of manufacture. Information such as date of manufacture, model year, gross vehicle weight rating, tire types and inflation pressure is also etched on this plate. The DOT Certification plate is affixed to L.H. control panel.

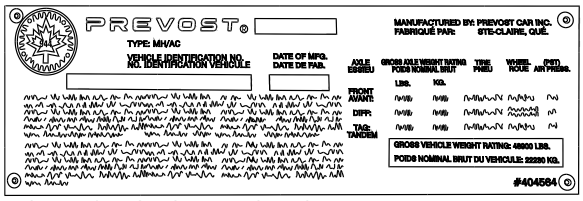

FIGURE 8: DOT CERTIFICATION PLATE 00016

4.1.9 EPA Engine Label

The exhaust emission certification label affixed to the rear junction box certifies that the engine conforms to federal and any state exhaust emission regulations (Fig. 9). It gives the operating conditions under which certification was made.

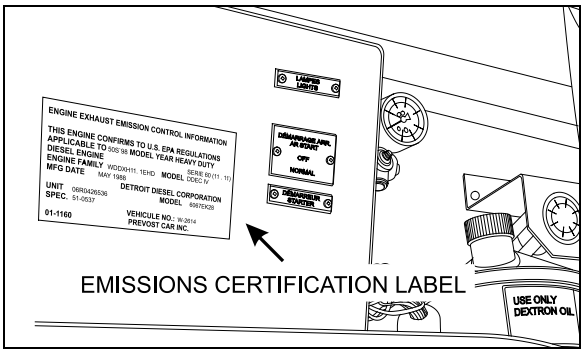

FIGURE 9 : ENGINE COMPARTMENT 00019

4.1.10 Fuel Tank Label

The fuel tank label is molded on the side of the fuel tank. To read this label, unscrew the fuel tank access panel nuts located at the left in the condenser compartment.

4.1.11 Vehicle Identification Number (VIN)

The seventeen digit vehicle identification number (VIN) is located on a plate (Fig. 10 & 11) located on the windshield frame pillar (driver's side). The VIN is visible from the outside of the coach. Make sure the correct vehicle identification number is given when ordering replacement parts. Using the VIN when ordering parts will facilitate processing.

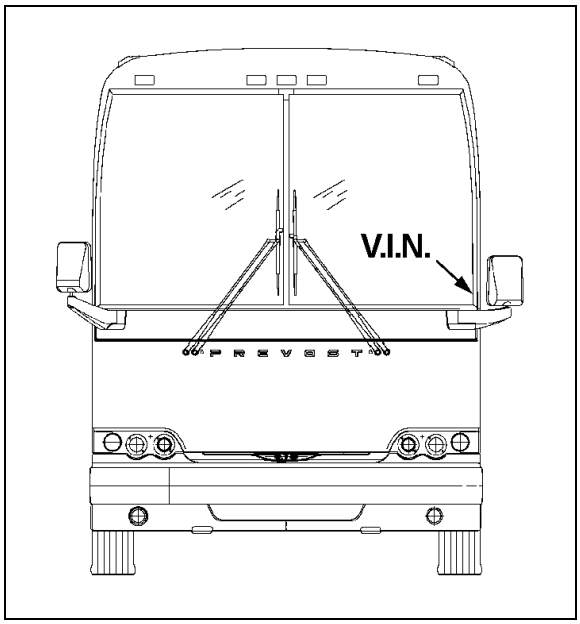

FIGURE 10 : VEHICLE I.D. 00020

NOTE

Record the VIN in the coach documentation and keep with company records. The VIN will normally be used for vehicle registration and for obtaining vehicle insurance coverage.

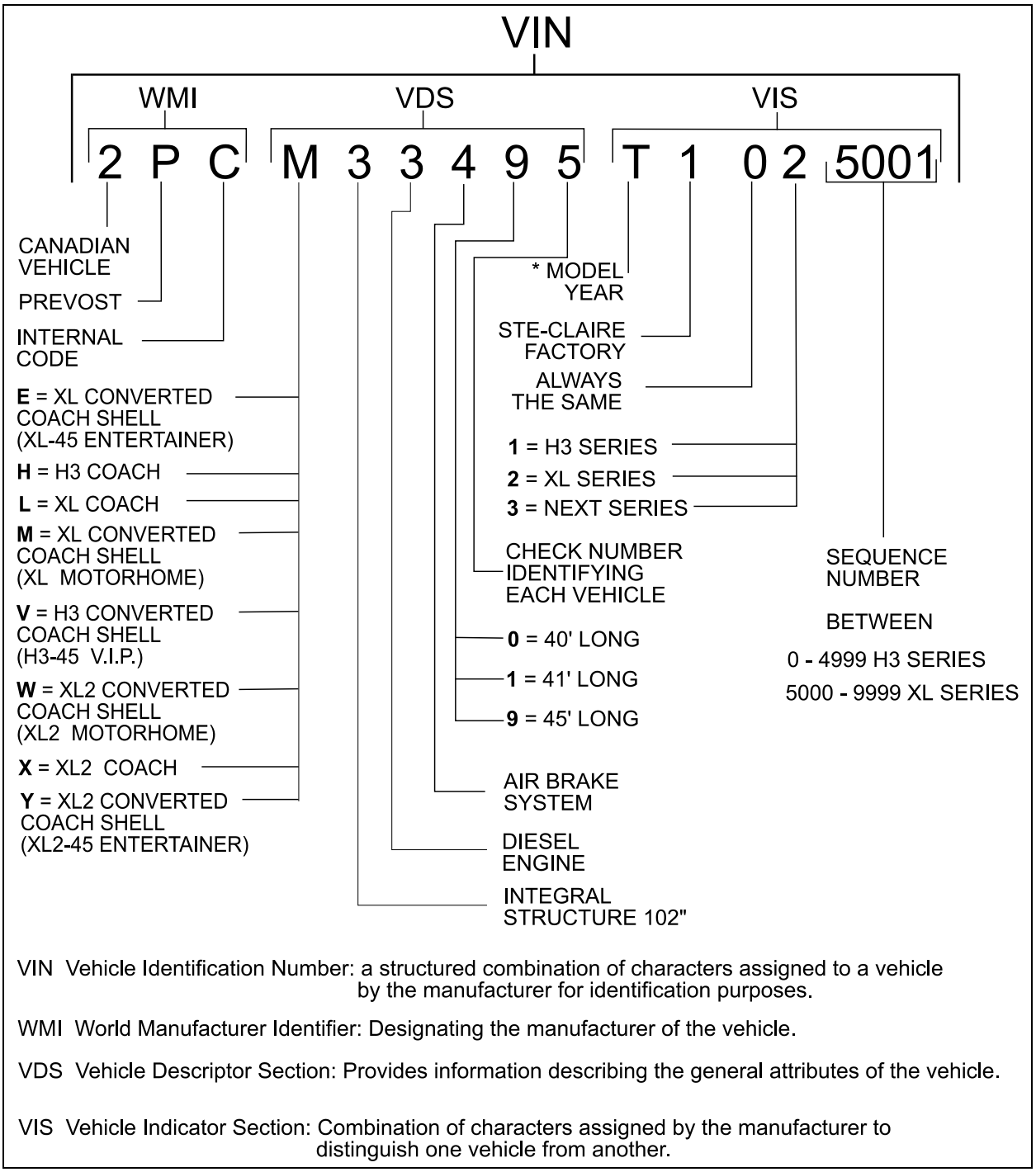

FIGURE 11 : VEHICLE IDENTIFICATION NUMBER VIN1

YEAR	CODE	YEAR	CODE
1995	S	2001	1
1996	T	2002	2
1997	V	2003	3
1998	W	2004	4
1999	X	2005	5
2000	Y	2006	6

5. FASTENER STRENGTH IDENTIFICATION

Most commonly used metric fastener strength property classes are 9.8 and 10.9 with the class identification embossed on the head of each bolt. Customary (inch) strength classes range from grade 2 to 8 with radial line identification embossed on each bolt head actual grade (i.e., a grade 7 bolt will have 5 embossed radial lines on the bolt head). Some metric nuts will be marked with single digit strength identification numbers on the nut face. Fig. 13 shows the different strength markings. When replacing metric fasteners, be careful to use fasteners of the same or greater strength than the original fasteners (the same number marking or higher). It is also important to select replacement fasteners of the correct size. Correct replacement fasteners are available through the parts division. Some metric fasteners available in after-market parts sources were designed to metric standards of countries other the United States and may be of a lower strength, may not have the numbered head marking system, and may be of a different thread pitch.

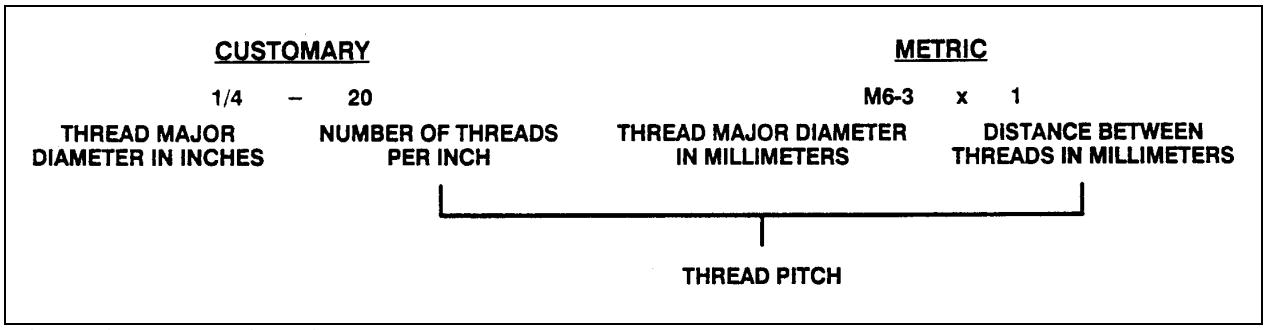

FIGURE 12 : THREAD NOTATION 00002

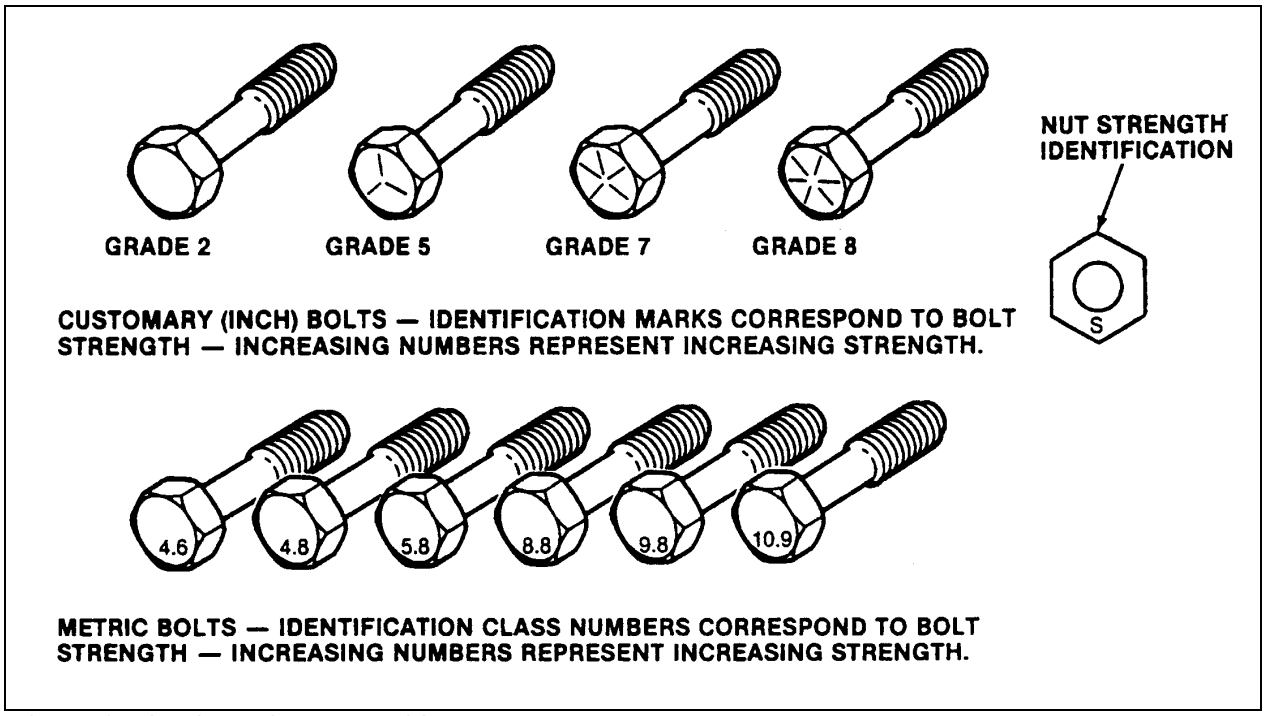

FIGURE 13: BOLT STRENGTH MARKINGS 00003

The metric fasteners used on the coach are designed to new standards and may not yet be manufactured by some non-domestic fastener suppliers. In general, except for special applications, the common sizes and pitches are:

- M 8 X 1.25;
- M 10 X 1.5;
- M 12 X 1.75;
- M 14 X 2;

5.1 SELF-LOCKING FASTENERS

A self-locking fastener is designed with an interference fit between the nut and bolt threads. This is most often accomplished by distortion of the top thread of an all-metal nut or bolt or by using a nylon patch on the threads. A nylon insert or the use of adhesives may also be used as a method of interference between nut and bolt threads (Fig. 14).

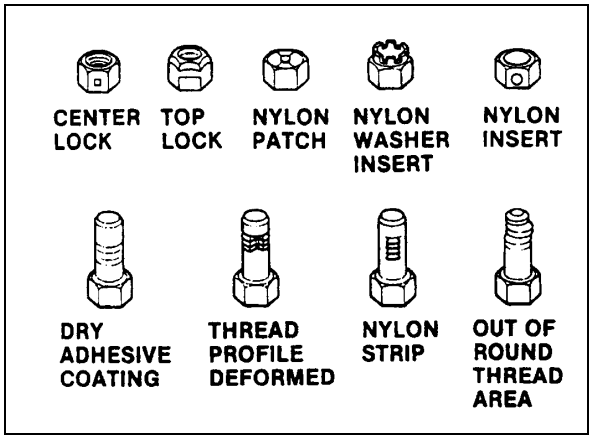

FIGURE 14 : SELF-LOCKING FASTENERS 00004

5.2 RECOMMENDATIONS FOR REUSE

Clean, unrusted self-locking fasteners may be reused as follows:

a) Clean dirt and other foreign matter from the fastener;

b) Inspect the fastener to ensure there is no crack, elongation, or other sign of fatigue or overtightening. If there is any doubt, replace with a new self-locking fastener of equal or greater strength;

c) Assemble parts and hand start fastener;

d) Observe that, before the fastener seats, it develops torque per the chart in table two. If there is any doubt, replace with a new self-locking fastener of equal or greater strength;

e) Tighten the fastener to the torque specified in the applicable section of this manual;

Fasteners which are rusty or damaged should be replaced with new ones of equal or greater strength.

SELF-LOCKING FASTENER TORQUE CHART

METRIC		6 & 6.3	8	10	12	14	16	20
NUTS AND	Nm	0.4	0.8	1.4	2.2	3.0	4.2	7.0
ALL-METAL BOLTS	Lbf-in	4.0	7.0	12	18	25	35	57
ADHESIVE OR NYLON	Nm	0.4	0.6	1.2	1.6	2.4	3.4	5.6
COATED BOLTS	Lbf-in	4.0	5.0	10	14	20	28	46

US STANDARD		.250	.312	.375	.437	.500	.562	.625	.750
NUTS AND	Nm	0.4	0.6	1.4	1.8	2.4	3.2	4.2	6.2
ALL-METAL BOLTS	Lbf-in	4.0	5.0	12	15	20	27	35	51
ADHESIVE OR NYLON	Nm	0.4	0.6	1.0	1.4	1.8	2.6	3.4	5.2
COATED BOLTS	Lbf-in	4.0	5.0	9.0	12	15	22	28	43

5.3 SIX LOBED SOCKET HEAD

Six lobed socket head (Torx) fasteners are used in some applications on vehicles covered in this manual. The tools designed for these fasteners are available commercially. However, in some cases, if the correct tool is not available, a hex socket head wrench may be used.

Multiply	by	to get equivalent number of:	Multiply	by	to get equivalent number of:
LENGTH			**ACCELERATION**		
Inch	25.4	millimeters (mm)	Foot/sec^2	0.305	meter/sec^2 (m/s^2)
Foot	0.305	meters (m)	inch/sec^2	0.026	meter/sec^2
Yard	0.914	meters			
Mile	1.609	kilometers (km)	**TORQUE**		
AREA			Pound-inch	0.113	newton-meters (N·m)
			Pound-foot	1.35	newton-meters
Inch^2	645.2	millimeters^2 (mm^2)			
	6.45	centimeters^2 (cm^2)	**POWER**		
Foot^2	0.093	meters^2 (m^2)			
Yard^2	0.836	meters^2	Horsepower	0.746	kilowatts (kW)
VOLUME			**PRESSURE OR STRESS**		
Inch^3	16 387.0	mm^3			
	16.387	cm^3	Inches of water	0.249	kilopascals (kPa)
	0.016	liters (l)	Pounds/sq. in.	6.895	kilopascals
Quart	0.946	liters			
Gallon	3.785	liters	**ENERGY OR WORK**		
Yard^3	0.765	meters^3 (m^3)			
			BTU	1 055.0	joules (J)
MASS			Foot-pound	1.356	joules
			kilowatt-hour	3 600 000.0 or 3.6 x 10^6	joules (J = one W's)
Pound	0.453	kilograms (kg)			
Ton	907.18	kilograms (kg)			
Ton	0.907	ton (t)	**LIGHT**		
FORCE			Foot candle	1.076	lumens/meter^2 (lm/m^2)
Kilogram	9.807	newtons (N)			
Ounce	0.278	newtons	**VELOCITY**		
Pound	4.448	newtons			
TEMPERATURE			Miles/hour	1.609	kilometers/hr (km/h)
Degree Fahrenheit	(†°F – 32) ÷ 1.8	Degree Celsius (C)			

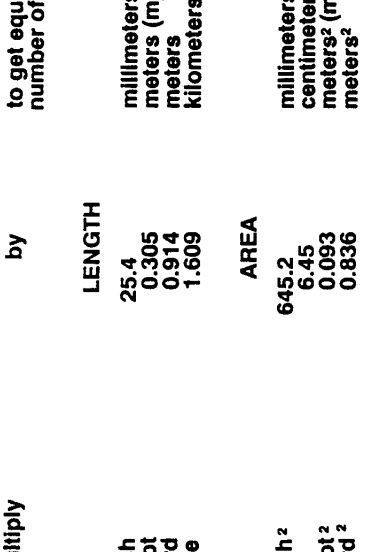

FIGURE 15: METRIC - US STANDARD CONVERSION TABLE

00005

DECIMAL AND METRIC EQUIVALENTS

FRACTIONS	DECIMAL IN.	METRIC MM	FRACTIONS	DECIMAL IN.	METRIC MM
1/64	.015625	.39688	33/64	.515625	13.09687
1/32	.03125	.79375	17/32	.53125	13.49375
3/64	.046875	1.19062	35/64	.546875	13.89062
1/16	.0625	1.58750	9/16	.5625	14.28750
5/64	.078125	1.98437	37/64	.578125	14.68437
3/32	.09375	2.38125	19/32	.59375	15.08125
7/64	.109375	2.77812	39/64	.609375	15.47812
1/8	.125	3.1750	5/8	.625	15.87500
9/64	.140625	3.57187	41/64	.640625	16.27187
5/32	.15625	3.96875	21/32	.65625	16.66875
11/64	.171875	4.36562	43/64	.671875	17.06562
3/16	.1875	4.76250	11/16	.6875	17.46250
13/64	.203125	5.15937	45/64	.703125	17.85937
7/32	.21875	5.55625	23/32	.71875	18.25625
15/64	.234375	5.95312	47/64	.734375	18.65312
1/4	.250	6.35000	3/4	.750	19.05000
17/64	.265625	6.74687	49/64	.765625	19.44687
9/32	.28125	7.14375	25/32	.78125	19.84375
19/64	.296875	7.54062	51/64	.796875	20.24062
5/16	.3125	7.93750	13/16	.8125	20.63750
21/64	.328125	8.33437	53/64	.828125	21.03437
11/32	.34375	8.73125	27/32	.84375	21.43125
23/64	.359375	9.12812	55/64	.859375	21.82812
3/8	.375	9.52500	7/8	.875	22.22500
25/64	.390625	9.92187	57/64	.890625	22.62187
13/32	.40625	10.31875	29/32	.90625	23.01875
27/64	421875	10.71562	59/64	.921875	23.41562
7/16	.4375	11.11250	15/16	.9375	23.81250
29/64	.453125	11.50937	61/64	.953125	24.20937
15/32	.46875	11.90625	31/32	.96875	24.60625
31/64	.484375	12.30312	63/64	.984375	25.00312
1/2	.500	12.70000	1	1.00	25.40000

FIGURE 16: CONVERSION CHART 00006

CONTENTS

1. ENGINE 01-3

2. ENGINE-MOUNTED COMPONENTS 01-3

2.1 ELECTRONIC CONTROL MODULE 01-4
2.2 N3 ELECTRONIC UNIT INJECTOR 01-4
2.3 VPOD 01-4
2.3.1 VPOD Removal 01-5
2.3.2 VPOD Installation 01-5
2.4 EGR HYDRAULIC VALVE 01-5
2.5 SYNCHRONOUS REFERENCE SENSOR 01-5
2.6 TIMING REFERENCE SENSOR 01-5
2.7 TURBO BOOST PRESSURE SENSOR 01-5
2.8 COOLANT TEMPERATURE SENSOR 01-6
2.9 FUEL TEMPERATURE SENSOR 01-6
2.10 AIR TEMPERATURE SENSOR 01-6
2.11 TURBO COMPRESSOR IN TEMPERATURE SENSOR 01-6
2.12 ABSOLUTE OIL PRESSURE SENSOR 01-6
2.13 OIL TEMPERATURE SENSOR 01-6

3. ENGINE-RELATED COMPONENTS 01-7

3.1 COOLANT LEVEL SYSTEM (CLS) 01-7
3.2 ELECTRONIC FOOT PEDAL ASSEMBLY (EFPA) & THROTTLE POSITION SENSOR 01-7
3.3 CRUISE CONTROL SWITCHES (CCS) 01-7
3.4 DIAGNOSTIC SYSTEM ACCESSORIES (DSA) 01-8
3.4.1 Check Engine Telltale Light 01-8
3.4.2 Stop Engine Telltale Light 01-8
3.4.3 Stop Engine Override Switch 01-8
3.4.4 Diagnostic Data Link (DDL) Connectors 01-8

4. DDEC V DIAGNOSTIC CODES 01-8

4.1 READING DIAGNOSTIC CODES - FLASHING LIGHT METHOD: 01-8

5. ENGINE OIL LEVEL 01-19

6. ENGINE OIL AND FILTER CHANGE 01-20

7. RECOMMENDED ENGINE OIL TYPE 01-20

8. POWER PLANT ASSEMBLY REMOVAL 01-21

9. POWER PLANT ASSY. INSTALLATION 01-24

10. VALVE COVER REMOVAL 01-24

10.1 XL2-45 COACHES AND MOTORHOMES 01-24

11. JAKE BRAKE 01-25

12. ENGINE MOUNTS 01-25

13. ENGINE TROUBLESHOOTING GUIDE 01-27

14. SPECIFICATIONS 01-28

ILLUSTRATIONS

FIGURE 1: DETROIT DIESEL SERIES 60 ENGINE (TYPICAL) 01-3
FIGURE 2: ELECTRONIC CONTROL MODULE (ECM) 01-4
FIGURE 3: UNIT INJECTOR CROSS SECTION 01-4
FIGURE 4: VPOD LOCATION 01-4
FIGURE 5: VPOD INSTALLATION 01-5
FIGURE 6: EGR VALVE & ACTUATOR ASSEMBLY 01-5
FIGURE 7: TURBO BOOST PRESSURE SENSOR 01-6
FIGURE 8: FUEL TEMPERATURE SENSOR 01-6
FIGURE 9: TURBO COMPRESSOR IN TEMPERATURE SENSOR LOCATION 01-6
FIGURE 10: ENGINE OPS 01-6
FIGURE 11: ELECTRONIC FOOT PEDAL ASSEMBLY 01-7
FIGURE 12: ENGINE OIL LEVEL DIPSTICK 01-19
FIGURE 13: OIL RESERVE TANK 01-19
FIGURE 14: ENGINE DRAIN PLUG AND OIL FILTERS 01-20
FIGURE 15: BELT TENSIONER VALVE 01-21
FIGURE 16: ELECTRIC FAN-CLUTCH CONNECTOR 01-22
FIGURE 17: ENGINE COMPARTMENT XL2 COACHES (TYPICAL) 01-23
FIGURE 18: ENGINE COMPARTMENT XL2 MTH (TYPICAL) 01-23
FIGURE 19: RUBBER DAMPER TOLERANCE 01-24
FIGURE 20: POWER PLANT CRADLE INSTALLATION 01-26

1. ENGINE

This vehicle is powered by a 6-cylinder, four-cycle, Detroit Diesel series 60 engine equipped with an electronic control system (DDEC V).

Two engine displacements are used in the Series 60 engines: 12.7 and 14.0 liters. Summary information on the Electronic Control System is given in this section.

Complete maintenance and repair information on the engine will be found in the current DDEC V Service Manual. This maintenance manual covers engine accessories, controls and related components.

Procedures for engine removal and installation are given at the end of this section. The DDEC system is self-diagnostic. It can identify faulty components and other engine-related problems by providing the technician with a diagnostic code.

Refer to DDEC Troubleshooting Guide published by Detroit Diesel for more complete information on diagnosis of components and system problems.

DDEC V (**D**etroit **D**iesel **E**lectronic **C**ontrol) controls the timing and quantity of fuel injected by the electronic unit injectors (EUI). The system also monitors several engine functions using electrical sensors, which send electrical signals to the Electronic Control Module (ECM). The ECM computes the electrical signals and determines the correct fuel output and timing for optimum power, fuel economy and emissions. The ECM also has the ability to display warnings or shut down the engine completely (depending on option selection) in the event of damaging engine conditions, such as low oil pressure, low coolant level, or high oil temperature.

Two categories divide system components: engine-mounted components and engine-related components.

2. ENGINE-MOUNTED COMPONENTS

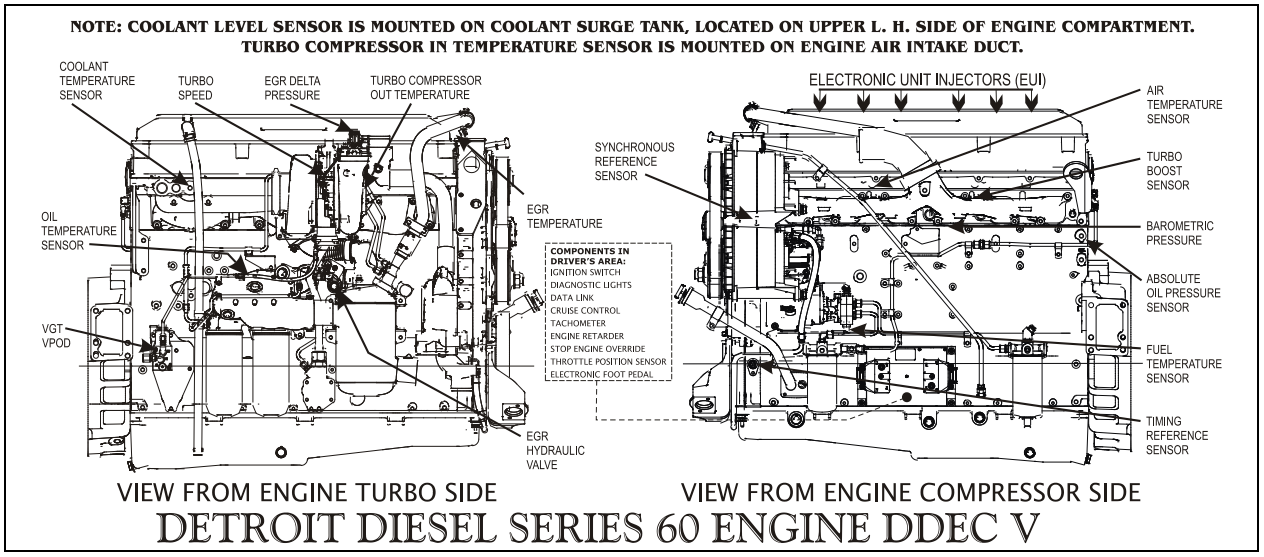

FIGURE 1: DETROIT DIESEL SERIES 60 ENGINE (TYPICAL) 01113

Engine-mounted components are as follows:

- Electronic Control Module
- Electronic Unit Injector
- Synchronous Reference Sensor
- Timing Reference Sensor
- Turbo Boost Pressure Sensor
- Coolant Temperature Sensor
- Fuel Temperature Sensor
- Air Temperature Sensor
- Absolute Oil Pressure Sensor
- Oil Temperature Sensor
- Barometric Pressure
- EGR Delta Pressure
- EGR Temperature
- Turbo Speed
- Turbo Compressor Out Temperature
- Turbo Compressor In Temperature

2.1 ELECTRONIC CONTROL MODULE

The Electronic Control Module is mounted, on the starter side of the engine (Fig. 2). Considered the *"Brain"* of the DDEC V system, it provides overall monitoring and control of the engine. It does so by comparing input data from the various sensors to a set of calibration data stored in the EEPROM (**E**lectrically **E**rasable, **P**rogrammable, **R**ead-**O**nly **M**emory) within the Electronic Control Module. After comparing the input data with the calibration data, the ECM sends high-current command pulses to the Electronic Unit Injectors (EUI) to initiate fuel injection. The ECM also receives feedback regarding the start and end of injection for a given cylinder. The EEPROM within the Electronic Control Module is factory programmed by Detroit Diesel. Reprogramming must be done at a Detroit Diesel authorized service center. However, some changes may be performed to the cruise control and road speed limiter using a diagnostic data reader (see paragraph "DDEC V Diagnostic Codes" in this section).

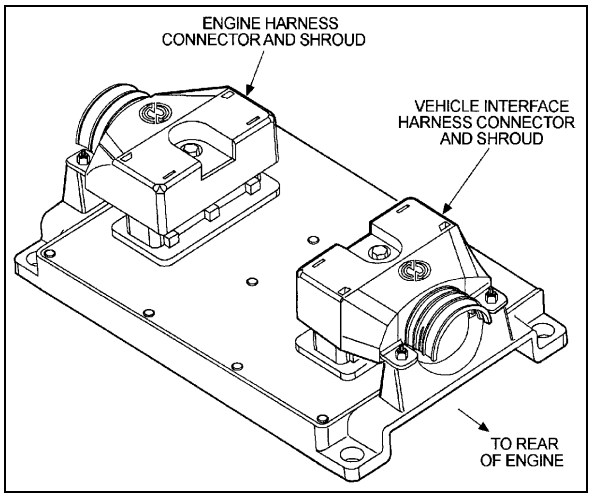

FIGURE 2: ELECTRONIC CONTROL MODULE (ECM) 01145

2.2 N3 ELECTRONIC UNIT INJECTOR

The N3 Electronic Unit Injector (EUI) is a compact device that injects diesel fuel directly into the combustion chamber (Fig. 3). The amount of fuel injected and injection timing is determined by the Electronic Control Module (ECM). The ECM sends a command pulse, which activates the injector solenoid. The EUI performs four functions:

- Creates the high-fuel pressure required for efficient injection;
- Meters and injects the exact amount of fuel required to handle the load;
- Atomizes the fuel for mixing with the air in the combustion chamber;
- Permits continuous fuel flow for component cooling**.**

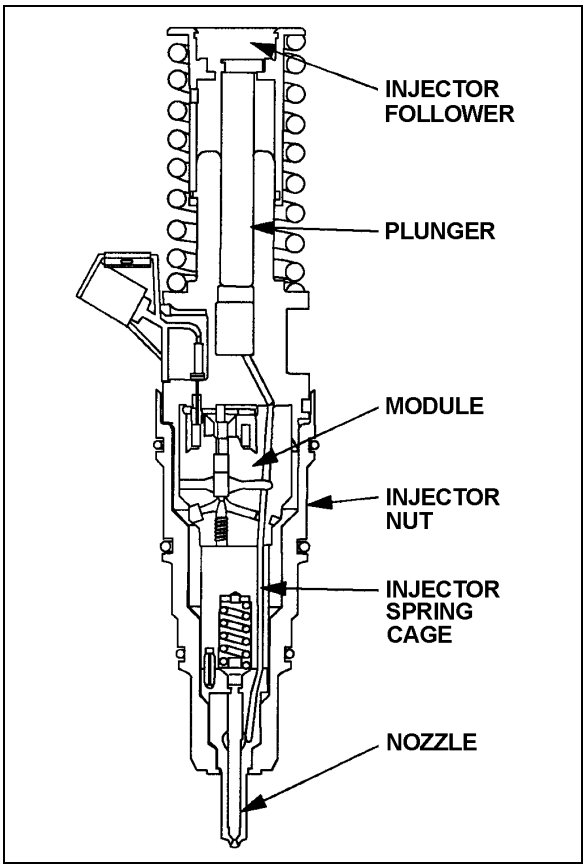

FIGURE 3: UNIT INJECTOR CROSS SECTION 01146

2.3 VPOD

There is one air-operated Variable Pressure Output Device (VPOD) that controls the Variable Geometry Turbo (VGT). The location of the VPOD is to the left of the engine oil filters (Fig. 4). Pneumatic system supplies air pressure.

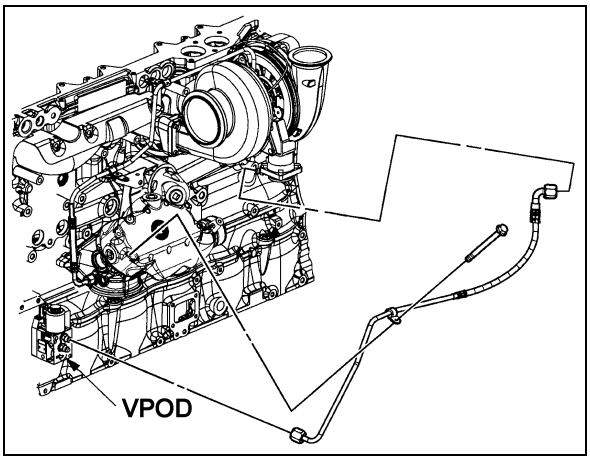

FIGURE 4: VPOD LOCATION 01149

2.3.1 VPOD Removal

1. Remove airline from VPOD.
2. Unplug harness connection.
3. Remove two bolts and one stud holding VPOD assembly and bracket to engine block.

2.3.2 VPOD Installation

1. Align VPOD assembly and bracket to threaded holes in engine block; install two bolts and one stud. Torque the M10 bolts and M10 stud to 43-54 Lbf-ft (58-73 Nm). Torque the M8 bolt to 22-28 Lbf-ft (30-38 Nm).
2. Connect airline to VPOD and tighten.
3. Plug harness connection into VPOD assembly.

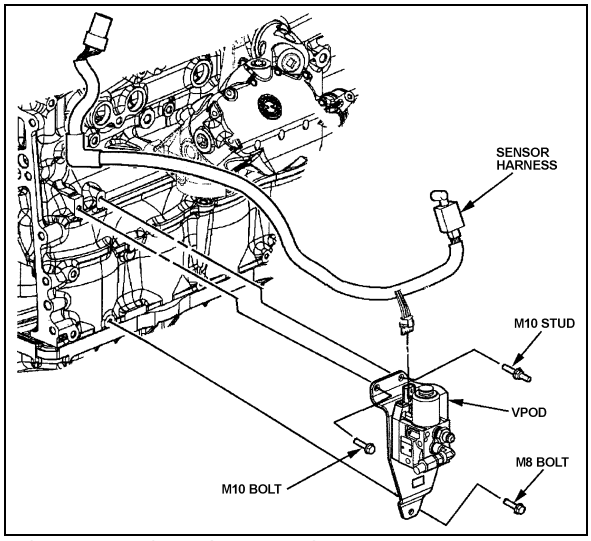

FIGURE 5: VPOD INSTALLATION 01147

NOTE
VPOD assembly is not serviceable, remove and replace only.

2.4 EGR HYDRAULIC VALVE

The hydraulic valve that controls the Exhaust Gas Recirculation (EGR) system is located on the same side as the VPOD but near the EGR cooler (Fig. 1 & 6).

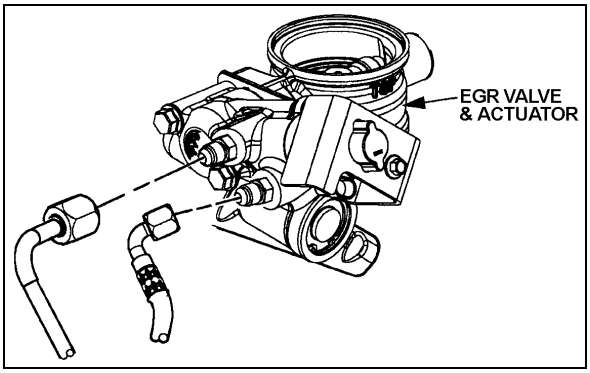

FIGURE 6: EGR VALVE & ACTUATOR ASSEMBLY 01148

2.5 SYNCHRONOUS REFERENCE SENSOR

The Synchronous Reference Sensor (SRS) is an electronic component, mounted to the rear of the gear case (Fig. 1). The SRS senses a raised metal pin on the rear of the camshaft idler gear and sends a signal to the ECM via a black connector wire. The SRS sensor extends through a hole in the gear case. It is positioned near the rear of the idler gear. A bolt, inserted through a hole in the SRS bracket, secures the SRS assembly to the gear case.

The idler gear pin passes by the SRS as piston number one crank pin reaches 45° before Top-Dead-Center. The ECM uses this information to determine engine speed.

The SRS is non-serviceable and must be replaced as a unit. No adjustment is required.

2.6 TIMING REFERENCE SENSOR

The Timing Reference Sensor (TRS) is an electronic component mounted on the left side of the gear case (right side of coach), near the crankshaft centerline. The TRS is positioned near the timing wheel gear teeth and extends through an opening in the gear case. A bolt, inserted through a hole in the TRS bracket, secures the TRS assembly to the gear case. The TRS connector is gray. The TRS sends a signal to the ECM, this signal is generated by a series of evenly spaced special teeth on the timing wheel. A tooth passes by the TRS as each cylinder crank pin reaches 10° before Top-Dead-Center.

The ECM uses these signals to determine injector solenoid operation time. The TRS is non-serviceable and must be replaced as a unit. No adjustment is required.

2.7 TURBO BOOST PRESSURE SENSOR

The Turbo Boost Pressure Sensor is located on the intake manifold. This device is a pressure

sensor that sends an electrical signal to the ECM. The ECM uses this information to compute the volume of air entering the engine. Turbo boost sensor information regulates fuel supply to control engine exhaust.

The turbo boost pressure sensor is non-serviceable and must be replaced as an assembly. No adjustment is required.

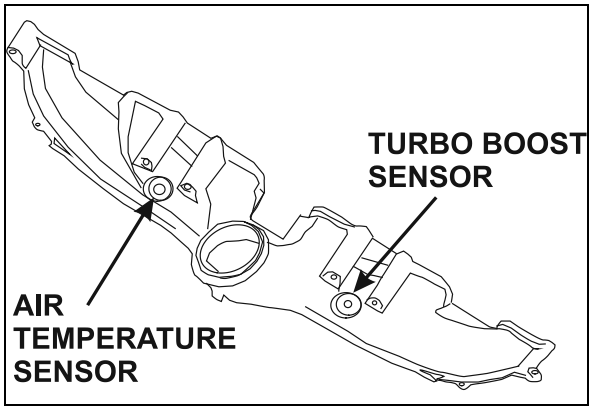

FIGURE 7: TURBO BOOST PRESSURE SENSOR 01023

2.8 COOLANT TEMPERATURE SENSOR

The coolant temperature sensor (Fig. 1) is mounted on the engine's radiator side (turbo side). The sensor helps protect the engine against overheating by sensing coolant temperature.

2.9 FUEL TEMPERATURE SENSOR

The Fuel Temperature Sensor (FTS) is installed underneath the fuel pump (Fig. 8).

The FTS sends an electrical signal to the ECM indicating fuel inlet temperature. The ECM uses this information to calculate fuel consumption.

The FTS is non-serviceable and must be replaced as a unit. No adjustment is required.

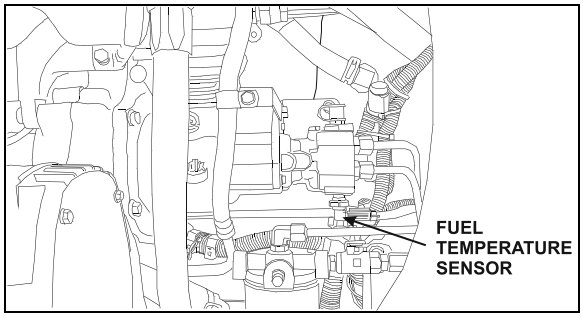

FIGURE 8: FUEL TEMPERATURE SENSOR 01024

2.10 AIR TEMPERATURE SENSOR

The Air Temperature Sensor (Fig. 1 & 7) located on the intake manifold provides input data to vary hot idle speed and injection timing. This helps to improve cold starts and reduces white exhaust smoke.

2.11 TURBO COMPRESSOR IN TEMPERATURE SENSOR

The Turbo Compressor In Temperature Sensor is located on the engine air intake pipe (Fig. 9).

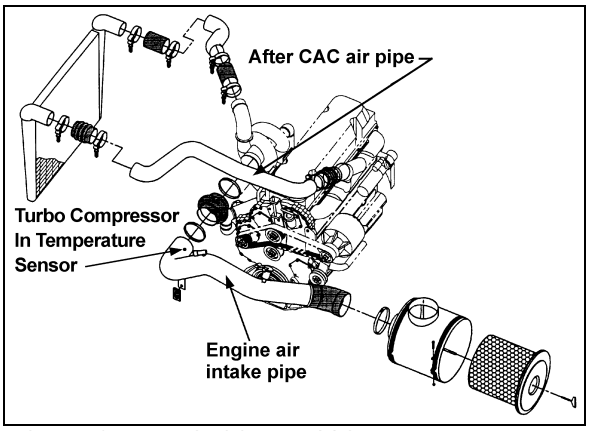

FIGURE 9: TURBO COMPRESSOR IN TEMPERATURE SENSOR LOCATION

2.12 ABSOLUTE OIL PRESSURE SENSOR

The Absolute Oil Pressure Sensor (OPS) is installed in the main engine-oil gallery. A typical location is the left rear corner of the cylinder block (Fig. 10). The OPS sends an electrical signal to the ECM indicating the engine oil pressure at any given speed. A low oil pressure signal exceeding seven seconds is used by the ECM to begin the stop engine or warning function. The OPS is non-serviceable and must be replaced as a unit. No adjustment is required.

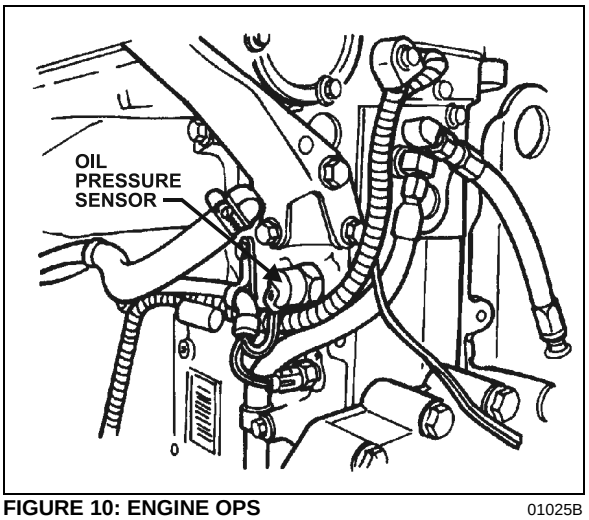

FIGURE 10: ENGINE OPS 01025B

2.13 OIL TEMPERATURE SENSOR

The Oil Temperature Sensor (OTS) is installed behind the engine oil filters manifold (Fig. 1). The

OTS sends an electrical signal to the ECM indicating engine oil temperature. The ECM uses this information to modify engine speed for better cold weather starts and faster warm-ups. Oil temperatures exceeding engine specifications for two seconds or more will illuminate the Check Engine Light.

The OTS is non-serviceable and must be replaced as a unit. No adjustment is required.

3. ENGINE-RELATED COMPONENTS

Engine-related components include:

- Coolant Level System (CLS)
- Electronic Foot Pedal Assembly (EFPA) and Throttle Position Sensor
- Cruise Control Switch (CCS)
- Diagnostic System Accessories (DSA)

3.1 COOLANT LEVEL SYSTEM (CLS)

The coolant level system consists of a conductivity probe mounted in the surge tank and an electronic interface module located inside the rear junction box. Coolant level is determined by the change in impedance of the probe and its brass mount when immersed in coolant. The electronic device in the module conditions the signal to levels compatible with DDEC. A low coolant level will trigger the engine warning functions.

The probe and electronic interface module are non-serviceable items and should be replaced as units, if found defective. No adjustment is required.

3.2 ELECTRONIC FOOT PEDAL ASSEMBLY (EFPA) & THROTTLE POSITION SENSOR

The Electronic Foot Pedal Assembly (EFPA) connects the accelerator pedal to a Throttle Position Sensor (TPS). The (TPS) is a device, which sends an electrical signal to the Electronic Control Module (ECM). The TPS signal varies in voltage depending on how far the pedal is depressed. The system is installed in the space normally occupied by a mechanical foot pedal. The (EFPA) has maximum and minimum stops that are built into the unit during manufacturing (Fig. 11). The (TPS) converts the operator's foot pedal input into a signal for the ECM. The (EFPA) is shown in Figure 11.

When installed by the equipment manufacturer, the TPS should not require adjustment. If the TPS is suspected of being misadjusted, confirm that the sensor is installed in accordance with the manufacturer's specifications. It is recommended that the idle count be at 50 or higher with a full throttle count of up to 200.

The TPS is self-calibrating and therefore has no optimum closed throttle or wide open throttle count value. If the counts are within the 50 to 200 range, the sensor is properly set.

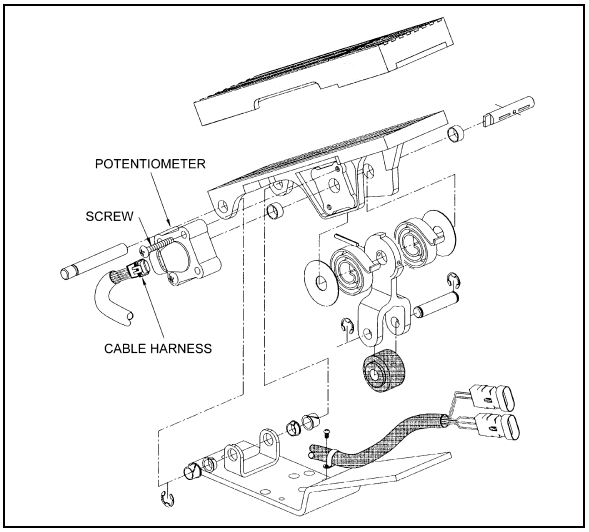

FIGURE 11: ELECTRONIC FOOT PEDAL ASSEMBLY 03035

Monitor the (TPS) at the controls as you move it through its full stroke. Be sure there is no misalignment or obstruction preventing the smooth movement of the TPS through the full stroke. Using a diagnostic data reader, check that the idle and full throttle position counts do not fall within the error zones. The error zones occur when the idle position is less than 14 counts, or when the full throttle position is more than 233 counts. Should these conditions occur, the ECU will signal diagnostic codes of 21-12 for idle error and 21-23 for wide-open throttle error.

3.3 CRUISE CONTROL SWITCHES (CCS)

The four cruise control switches are located in the driver's area on the L.H. side control panel.

1. **Cruise:** This is the main switch that actuates the ECM memory in order to use the speed-regulating mode.
2. **Set:** This switch is used to set the cruise control speed or to decrease the set speed by 2 MPH at each application.

NOTE
Cruise control system will not accept speed settings, nor will the "Resume" switch operate below 20 mph (32 km/h) and the engine speed must be above 1100 RPM.

3. **Resume:** Each time this switch is actuated, the speed will be increased by 2 mph (3,5 km/h). This switch allows the driver return to the last regulated speed following a brake or *"DECEL"* switch application.

NOTE
On-off switch must be in the "ON" position in order to return to the last regulated speed.

4. **Decel:** Will cancel the cruise temporarily and let the vehicle coast. Set speed is still in memory for resume.

For additional information, see the "Operator's Manual" or the "Owner's Manual".

3.4 DIAGNOSTIC SYSTEM ACCESSORIES (DSA)

The DDEC V engine Diagnostic System Accessories includes the following:

- Check Engine telltale light;
- Stop Engine telltale light;
- Stop Engine Override switch;
- Diagnostic Data Link (DDL) connectors.

3.4.1 Check Engine Telltale Light

The Check Engine telltale, mounted on the telltale light panel indicates that a problem has been detected and that a code has been stored in the ECM memory. This light also has a 5-second bulb check when the ignition is first turned on. The Check Engine telltale illuminates when the temperature at coolant sensors exceeds 217°F (103°C) and the temperature at oil sensors exceeds 260°F (127°C). When sensors reach those temperatures, DDEC starts to decrease engine power linearly.

3.4.2 Stop Engine Telltale Light

This light, also mounted on the telltale light panel, illuminates to indicate that a major engine problem is occurring (with the exception of a 5-second bulb check when the ignition is first turned on). The Stop Engine Light illuminates when the temperature at coolant sensors exceeds 222°F (106°C) and the temperature at oil sensors exceeds 239°F (115°C). When sensors detect such temperatures, DDEC shuts the engine down after a 30 seconds grace period. This 30-second delay may be extended another 30 seconds (if absolutely necessary) by using the STOP ENGINE OVERRIDE switch.

NOTE
Once engine is stopped, it can not be restarted until the malfunction is corrected.

3.4.3 Stop Engine Override Switch

This switch, mounted on the dashboard, may be used to extend the 30-second delay period before engine shutdown when the Stop engine telltale light is illuminated. This switch can be repeatedly depressed in order to move the vehicle out of traffic.

NOTE
The stop engine override switch will be operative only if it has been depressed before the end of the 30 second delay period.

⚠ CAUTION ⚠
The OVERRIDE switch must be used only in emergency cases, such as to move the vehicle out of traffic. Excessive use of this switch can cause serious damage to the engine.

This switch is also used for DDEC diagnostic code requests. Press this switch with the engine at idle or off but with the ignition in the "ON" position and active codes will be flashed on the CHECK ENGINE and STOP ENGINE telltale lights alternately. Refer to “DDEC V DIAGNOSTIC CODES” in this section for more information.

3.4.4 Diagnostic Data Link (DDL) Connectors

A connector is mounted on the L.H. footwell wall. Another connector is located in the rear electric compartment. They allow the connection of the Diagnostic Data Reader (DDR) to read the codes or to access pertinent data on the condition of the engine. This enables a more complete analysis of any defect found in the DDEC system operation. For more information, see Detroit Diesel Troubleshooting Guide.

4. DDEC V DIAGNOSTIC CODES

4.1 READING DIAGNOSTIC CODES - FLASHING LIGHT METHOD:

DDEC V makes use of two types of codes: Active and inactive. The difference between the two types of codes is as follows:

Active Codes: Codes that are currently keeping the Check Engine or Stop Engine telltale

light illuminated. Active codes are flashed via the Stop Engine Light when checked with the stop-engine-override switch.

Inactive Codes: These are all the codes logged in the ECM (whether or not they are currently turning on the Stop or Check Engine Light). Inactive codes are flashed via the Check Engine telltale light when checked with the stop-engine-override switch. In most instances, only the DDR can provide the information necessary for a quick diagnosis of the problem.

If you just need to read out codes, however, and do not have a DDR available, the following procedure will let you read out codes. Make sure the rear-starting switch (located in the engine compartment) is in the normal position. With the ignition ON, the engine idling or engine shut-off, momentarily depress the Stop Engine Override switch. Active codes will be flashed on the stop engine telltale, followed by the inactive codes being flashed on the check-engine telltale panel. The cycle repeats itself until the operator depresses the stop engine override switch again.

A code "43" consists of four flashes, followed by a short pause, then three flashes in quick succession.

Refer to DDEC Troubleshooting Manual for more information and SAE codes.

NOTE

Active codes are flashed in ascending numerical flash code order. Inactive codes are flashed in most recent to least recent order.

NOTE

Fault codes can only be cleared using the DDR.

NOTE

The listed codes may not be used in all applications. A default value in the normal operating range is used by the ECM to provide for engine operation if a sensor failure is present.

DDEC V Code	PID	SID	FMI	DESCRIPTION
11	187	--	4	Variable Speed Governor Sensor Voltage Low
11	187	--	7	Variable Speed Governor Switch System Not Responding
12	187	--	3	Variable Speed Governor Sensor Voltage High
13	111	--	4	Coolant Level Sensor Input Voltage Low
13	111	--	6	Add Coolant Level Sensor Input Voltage Low
13		146	6	EGR Valve Current too High
14	52	--	3	Intercooler Coolant Temperature Sensor Input Voltage High
14	110	--	3	Coolant Temperature Sensor Input Voltage High
14	175	--	3	Oil Temperature Sensor Input Voltage High
15	52	--	4	Intercooler Coolant Temperature Sensor Input Voltage Low
15	110	--	4	Coolant Temperature Sensor Input Voltage Low
15	175	--	4	Oil Temperature Sensor Input Voltage Low
16	111	--	3	Coolant Level Sensor Input Voltage High
16	111	--	5	Add Coolant Level Sensor Input Voltage High
16		146	5	EGR Valve Current too Low
17	51	--	3	Throttle Plate Position Sensor Input Voltage High
17	72	--	3	Blower Bypass Position Input Voltage High
17	354	--	3	Relative Humidity Sensor Circuit Failed High

DDEC V Code	PID	SID	FMI	DESCRIPTION
18	51	--	4	Throttle Plate Position Sensor Input Voltage Low
18	72	--	4	Blower Bypass Position Input Voltage Low
18	354	--	4	Relative Humidity Sensor Circuit Failed Low
21	91	--	3	Throttle Position Sensor Input Voltage High
22	91	--	4	Throttle Position Sensor Input Voltage Low
23	174	--	3	Fuel Temperature Sensor Input Voltage High
23	--	65	3	Oxygen Content Circuit Input Voltage High
24	174	--	4	Fuel Temperature Sensor Input Voltage Low
24	--	65	4	Oxygen Content Circuit Input Voltage Low
25	--	--	--	Reserved for ‘‘No Codes"
26	--	25	11	Aux. Shutdown #1 Active
26	--	61	11	Aux. Shutdown #2 Active
27	105	--	3	Intake Manifold Temperature Sensor Input Voltage High
27	171	--	3	Ambient Air Temperature Sensor Input Voltage High
27	172	--	3	Air Temperature Sensor Input Voltage High
28	105	--	4	Intake Manifold Temperature Sensor Input Voltage Low
28	171	--	4	Ambient Air Temperature Sensor Input Voltage Low
28	172	--	4	Air Temperature Sensor Input Voltage Low
29	351	—	4	TCI Temperature Circuit Failed Low
29	404	—	4	Turbo Compressor Temperature Out Sensor Input Voltage Low
31	--	51	3	Aux. Output #3 Open Circuit (High Side) – Pin E-49
31	--	51	4	Aux. Output #3 Short To Ground (High Side) – Pin E-49
31	--	51	7	Aux. Output #3 Mechanical System Fail - Pin E-49
31	--	52	3	Aux. Output #4 Open Circuit (High Side) - Pin E-48
31	--	52	4	Aux. Output #4 Short to Ground (High Side) - Pin E-48
31	--	52	7	Aux. Output #4 Mechanical System Failure - Pin E-48
31	--	260	3	Aux. Output #12 Open Circuit (High Side) - Pin E-46
31	--	260	4	Aux. Output #12 Short to Ground (High Side) - Pin E-46
31	--	260	7	Aux. Output #12 Mechanical System Failure - Pin E-46
31	--	261	3	Aux. Output #13 Open Circuit (High Side) - Pin E-47
31	--	261	4	Aux. Output #13 Short to Ground (High Side) - Pin E-47
31	--	261	7	Aux. Output #13 Mechanical System Failure - Pin E-47
31	--	262	3	Aux. Output #14 Open Circuit (High Side) - Pin E-50
31	--	262	4	Aux. Output #14 Short to Ground (High Side) - Pin E-50
31	--	262	7	Aux. Output #14 Mechanical System Failure - Pin E-50
31	--	263	3	Aux. Output #15 Open Circuit (High Side) - Pin E-51

DDEC V Code	PID	SID	FMI	DESCRIPTION
31	--	263	4	Aux. Output #15 Short to Ground (High Side) - Pin E-51
31	--	263	7	Aux. Output #15 Mechanical System Failure - Pin E-51
31	--	264	3	Aux. Output #16 Open Circuit (High Side) - Pin E-52
31	--	264	4	Aux. Output #16 Short to Ground (High Side) - Pin E-52
31	--	264	7	Aux. Output #16 Mechanical System Failure - Pin E-52
31	--	265	3	Aux. Output #17 Open Circuit (High Side) - Pin E-53
31	--	265	4	Aux. Output #17 Short to Ground (High Side) - Pin E-53
31	--	265	7	Aux. Output #17 Mechanical System Failure - Pin E-53
32	--	238	3	RSL Short to Battery (+)
32	--	238	4	RSL Open Circuit
32	--	239	3	AWL Short to Battery (+)
32	--	239	4	AWL Open Circuit
33	102	--	3	Turbo Boost Pressure Sensor Input Voltage High
34	102	--	4	Turbo Boost Pressure Sensor Input Voltage Low
35	19	--	3	High Range Oil Pressure Sensor Input Voltage High
35	100	--	3	Oil Pressure Sensor Input Voltage High
36	19	--	4	High Range Oil Pressure Sensor Input Voltage Low
36	100	--	4	Oil Pressure Sensor Input Voltage Low
37	18	--	3	High Range Fuel Pressure Sensor Input Voltage High
37	94	--	3	Fuel Pressure Sensor Input Voltage High
37	95	--	3	Fuel Restriction Sensor Input Voltage High
38	18	--	4	High Range Fuel Pressure Sensor Input Voltage Low
38	94	--	4	Fuel Pressure Sensor Input Voltage Low
38	95		4	Fuel Restriction Sensor Input Voltage Low
39	—	146	2	EGR Leak- Boost Power
39	—	146	12	EGR Leak- Boost Jake
39	—	146	7	EGR Valve Not Responding
39	—	147	2	VNT Vanes Not Responding – Boost Power
39	—	147	11	VNT Vanes at Max – Jake
39	—	147	12	VNT Vanes Not Responding – Boost Jake
39	—	147	14	EGR Flow too low
39	—	147	7	VNT Vanes Not Responding – EGR
41	--	21	0	Too Many CKP Sensor (missing CMP Sensor)
42	--	21	1	Too few CKP Sensor (missing CKP Sensor)
43	111	--	1	Coolant Level Low
44	52	--	0	Intercooler Coolant Temperature High
44	105	--	0	Intake Manifold Temperature High
44	105	--	14	Engine Power Derate Due to Intake Manifold Temperature

DDEC V Code	PID	SID	FMI	DESCRIPTION
44	110	--	0	Coolant Temperature High
44	110	--	14	Engine Power Derate Due to Coolant Temperature
44	172	--	0	Air Inlet Temperature High
44	175	--	0	Oil Temperature High
45	19	--	1	High Range Oil Pressure Low
45	100	--	1	Oil Pressure Low
46	168	--	1	ECM Battery Voltage Low
46	--	155		Injector V (reg) Voltage Failed Low
46	--	211	1	Sensor Supply Pins V-11/V-12 Low
46	--	212	4	Injector V (slope) Voltage Failed Low
46	--	214	1	RTC Backup Battery Voltage Low, Pin E-59
46	--	221	4	Injector I (pull-in) Voltage Failed Low
46	--	232	1	Sensor Supply Voltage Low, Pin E-12/E-26
47	18	--	0	High Range Fuel Pressure High
47	94	--	0	Fuel Pressure High
47	102	--	0	Turbo Boost Pressure High
47	102	--	14	Engine Power Derate Due to Turbo Boost Pressure
47	106	--	0	Air Inlet Pressure High
47	164	--	0	Injection Control Pressure High
48	18	--	1	High Range Fuel Pressure Low
48	94	--	1	Fuel Pressure Low
48	106	--	1	Air Inlet Pressure Low
48	164	--	1	Injection Control Pressure Low
48	351	--	1	TCI Temperature Low
48	404	—	1	Turbo Compressor Temperature Out Low
48	404	--	14	Engine Power Derate Due to Turbo Compressor Out Temperature
48	411	--	1	EGR Differential Pressure Low
48	412	--	1	EGR Temperature Low
49	351	--	0	TCI Temperature High
49	404	--	0	Turbo Compressor Out Temperature High
51	351	--	3	TCI Temperature Circuit Failed High
51	404	--	3	Turbo Compressor Out Temperature Sensor Input Voltage High
52	--	254	12	A/D Conversion Fail
53	--	253	2	Nonvolatile Checksum Incorrect
53	--	253	12	EEPROM Write Error
53	--	253	13	Out of Calibration
54	84	--	12	Vehicle Speed Sensor Fault

DDEC V Code	PID	SID	FMI	DESCRIPTION
55	--	216	14	Other ECU Fault (This fault is logged in conjunction with another fault to indicate missing information from another ECU.)
55	--	231	12	J1939 Data Link Fault
55	--	248	8	Proprietary Data Link Fault (Master)
55	--	248	9	Proprietary Data Link Fault (Receiver)
56	--	250	12	J1587 Data Link Fault
57	--	249	12	J1922 Data Link Fault
58	92	--	0	Torque Overload
61	--	xxx	0	Injector xxx Response Time Long
62	--	26	3	Aux. Output #1 Short to Battery (+) – Pin V-4
62	--	26	4	Aux. Output #1 Open Circuit - Pin V-4
62	—	26	7	Aux. Output #1 Mechanical System Not Responding Properly - Pin V-4
62	--	40	3	Aux. Output #2 Short to Battery (+) - Pin V-5
62	--	40	4	Aux. Output #2 Open Circuit - Pin V-5
62	—	40	7	Aux. Output #2 Mechanical System Not Responding Properly – Pin V-5
62	--	53	3	Aux. Output #5 Short to Battery (+) - Pin V-6
62	--	53	4	Aux. Output #5 Open Circuit - Pin V-6
62	—	53	7	Aux. Output #5 Mechanical System Not Responding Properly - Pin V-6
62	--	54	3	Aux. Output #6 Short to Battery (+) - Pin V-7
62	--	54	4	Aux. Output #6 Open Circuit - Pin V-7
62	--	54	7	Aux. Output #6 Mechanical System Not Responding Properly - Pin V-7
62	--	55	3	Aux. Output #7 Short to Battery (+) - Pin V-40
62	--	55	4	Aux. Output #7 Open Circuit - Pin V-40
62	—	55	7	Aux. Output #7 Mechanical System Not Responding Properly - Pin V-40
62	--	56	3	Aux. Output #8 Short to Battery (+) – Pin V-53
62	--	56	4	Aux. Output #8 Open Circuit - Pin V-53
62	--	56	7	Aux. Output #8 Mechanical System Not Responding Properly - Pin V-53
62	--	257	3	Aux. Output #9 Open Circuit – Pin V-54
62	--	257	4	Aux. Output #9 Short to Gnd – Pin V-54
62	--	257	7	Aux. Output #9 Mechanical System Failure – Pin V-54
62	--	258	3	Aux. Output #10 Open Circuit – Pin V-55
62	--	258	4	Aux. Output #10 Short to Gnd – Pin V-55
62	--	258	7	Aux. Output #10 Mechanical System Failure – Pin V-55
62	--	259	3	Aux. Output #11 Open Circuit – Pin E-13

DDEC V Code	PID	SID	FMI	DESCRIPTION
62	--	259	4	Aux. Output #11 Short to Gnd – Pin E-13
62	--	259	7	Aux. Output #11 Mechanical System Failure – Pin E-13
63	--	57	0	PWM #1 Above Normal Range, Pin V-53
63	--	57	1	PWM #1 Below Normal Range, Pin V-53
63	--	57	3	PWM #1 Short to Battery (+), Pin V-53
63	--	57	4	PWM #1 Open Circuit, Pin V-53
63	--	58	0	PWM #2 Above Normal Range, Pin V-46
63	--	58	1	PWM #2 Below Normal Range, Pin V-46
63	--	58	3	PWM #2 Short to Battery (+), Pin V-46
63	--	58	4	PWM #2 Open Circuit, Pin V-46
63	--	59	0	PWM #3 Above Normal Range, Pin E-3
63	--	59	1	PWM #3 Below Normal Range, Pin E-3
63	--	59	3	PWM #3 Short to Battery (+), Pin E-3
63	--	59	4	PWM #3 Open Circuit, Pin E-3
63	--	60	0	PWM #4 Above Normal Range, Pin E-4
63	--	60	1	PWM #4 Below Normal Range, Pin E-4
63	--	60	3	PWM #4 Short to Battery (+), Pin E-4
63	--	60	4	PWM #4 Open Circuit, Pin E-4
63	--	267	0	PWM #5 Above Normal Range - Pin E-8
63	--	267	1	PWM #5 Below Normal Range - Pin E-8
63	--	267	3	PWM #5 Short to Battery (+) - Pin E-8
63	--	267	4	PWM #5 Open Circuit - Pin E-8
63	--	267	7	PWM #5 Mechanical System Failed - Pin E-8
63	--	268	0	PWM #6 Above Normal Range - Pin E-11
63	--	268	1	PWM #6 Below Normal Range - Pin E-11
63	--	268	3	PWM #6 Short to Battery (+) - Pin E-11
63	--	268	4	PWM #6 Open Circuit - Pin E-11
63	--	268	7	PWM #6 Mechanical System Failed - Pin E-11
64	103	--	0	Turbo Overspeed
64	103	--	8	Turbo Speed Sensor Input Failure – Abnormal Period
65	51	--	0	Throttle Plate Position Above Normal Range
65	51	--	1	Throttle Plate Position Below Normal Range
65	51	--	2	Throttle Plate Position Erratic
65	51	--	7	Throttle Plate Not Responding
65	107	--	3	Air Filter Restriction Sensor Voltage High
65	107	--	4	Air Filter Restriction Sensor Voltage Low
66	99	--	3	Oil Filter Restriction Sensor Voltage High
66	99	--	4	Oil Filter Restriction Sensor Voltage Low

DDEC V Code	PID	SID	FMI	DESCRIPTION
66	--	76	0	Engine Knock Level Above Normal Range
66	--	76	3	Engine Knock Level Sensor Input Voltage High
66	--	76	4	Engine Knock Level Sensor Input Voltage Low
66	--	76	7	Engine Knock Level Sensor Not Responding
67	20	--	3	High Range Coolant Pressure Sensor Input Voltage High
67	20	--	4	High Range Coolant Pressure Sensor Input Voltage Low
67	106	--	3	Air Inlet Pressure Sensor Input Voltage High
67	106	--	4	Air Inlet Pressure Sensor Input Voltage Low
67	109	--	3	Coolant Pressure Sensor Input Voltage High
67	109	--	4	Coolant Pressure Sensor Input Voltage Low
68	--	230	5	TPS Idle Validation Circuit Fault (open circuit)
68	--	230	6	TPS Idle Validation Circuit Fault (short to ground)
71	--	xxx	1	Injector xxx Response Time Short
72	84	--	0	Vehicle Overspeed
72	84	--	11	Vehicle Overspeed (Absolute)
72	--	65	0	Oxygen Content Too High
72	--	65	1	Oxygen Content Too Low
73	107	--	0	Air Filter Restriction High
73	--	77	0	Gas Valve Position Above Normal Range
73	--	77	1	Gas Valve Position Below Normal Range
73	--	77	3	Gas Valve Position Input Voltage High
73	--	77	4	Gas Valve Position Input Voltage Low
73	--	77	7	Gas Metering Valve Not Responding
74	70	--	4	Optimized Idle Safety Loop Short to Ground
74	99	--	0	Oil Filter Restriction High
75	168	--	0	ECM Battery Voltage High
75	--	155	3	Injector V (reg) Voltage Failed High
75	--	211	0	Sensor Supply Pins V-11/V-12 Voltage High
75	--	212	3	Injector V (slope) Voltage Failed High
75	--	221	3	Injector V (pull-in) Voltage Failed High
75	--	214	0	RTC Backup Battery Voltage High
75	--	232	0	Sensor Supply Voltage High, Pin E-26
76	121	--	0	Engine Overspeed With Engine Brake
77	19	—	0	High Range Oil Pressure High
77	20	—	0	High Range Coolant Pressure High
77	21	—	0	ECU Temperature Above Range
77	21	—	1	ECU Temperature Below Range
77	21	—	3	ECU Temperature Above Failed High

DDEC V Code	PID	SID	FMI	DESCRIPTION
77	21	—	4	ECU Temperature Above Failed Low
77	72	—	0	Blower Bypass Door Position High
77	72	—	1	Blower Bypass Door Position Low
77	73	—	1	Fire Pump Pressure Low
77	81	—	0	Exhaust Back Pressure High
77	81	—	1	Exhaust Back Pressure Low
77	81	—	3	Exhaust Back Pressure Sensor Voltage High
77	81	—	4	Exhaust Back Pressure Sensor Voltage Low
77	81	—	12	Exhaust Back Pressure at Rampdown Threshold
77	95	—	1	Fuel Filter Differential Pressure Low
77	99	—	1	Oil Filter Differential Pressure Low
77	100	—	0	Engine Oil Pressure High
77	102	—	1	Turbo Boost Pressure Low
77	105	—	1	Inlet Manifold Temperature Low
77	107	—	1	Air filter Restriction Pressure Low
77	108	—	0	Barometric Pressure High
77	108	—	1	Barometric Pressure Low
77	109	—	0	Coolant Pressure High
77	110	—	1	Coolant Temperature Low
77	111	—	0	Coolant Level High
77	171	—	0	Ambient Air Temperature High
77	171	—	1	Ambient Air Temperature Low
77	172	—	1	Air Inlet Temperature Low
77	174	—	0	Fuel Temperature High
77	174	—	1	Fuel Temperature Low
77	175	—	1	Engine Oil Temperature Low
77	222	—	14	Anti-Theft Fault Present
77	251	—	10	Clock Module Abnormal Rate of Change
77	251	—	13	Clock Module Failure
77	252	—	10	Clock Module Abnormal Rate of Change
77	252	—	13	Clock Module Failure
77	354	—	0	Relative Humidity Above Range
77	354	—	1	Relative Humidity Below Range
77	446	—	0	Cylinder Head Temperature Above Range
77	—	151	11	Service Now Lamp Fault Expiration
78	86	--	14	Cruise Control/Adaptive Cruise Control Fault
81	98	--	3	Oil Level Sensor Input Voltage High
81	101	--	3	Crankcase Pressure Sensor Input Voltage High

DDEC V Code	PID	SID	FMI	DESCRIPTION
81	153	--	3	Extended Crankcase Pressure Input Voltage High
81	164	--	3	Injection Control Pressure Sensor Input Voltage High
81	173	--	3	Exhaust Temperature Sensor Input Voltage High
81	411	—	3	EGR Delta Pressure Sensor Circuit Failed High
81	412	—	3	EGR Temperature Circuit Failed High
81	412	—	9	EGR Temperature Network Sensor Not Responding
81		20	3	Timing Actuator Failed High
81		20	4	Timing Actuator Failed Low
81	--	129	3	Exhaust Port Temperature #1 Sensor Voltage High
81	--	130	3	Exhaust Port Temperature #2 Sensor Voltage High
81	--	131	3	Exhaust Port Temperature #3 Sensor Voltage High
81	--	132	3	Exhaust Port Temperature #4 Sensor Voltage High
81	--	133	3	Exhaust Port Temperature #5 Sensor Voltage High
81	--	134	3	Exhaust Port Temperature #6 Sensor Voltage High
81	--	135	3	Exhaust Port Temperature #7 Sensor Voltage High
81	--	136	3	Exhaust Port Temperature #8 Sensor Voltage High
81	--	137	3	Exhaust Port Temperature #9 Sensor Voltage High
81	--	138	3	Exhaust Port Temperature #10 Sensor Voltage High
81	--	139	3	Exhaust Port Temperature #11 Sensor Voltage High
81	--	140	3	Exhaust Port Temperature #12 Sensor Voltage High
81	--	141	3	Exhaust Port Temperature #13 Sensor Voltage High
81	--	142	3	Exhaust Port Temperature #14 Sensor Voltage High
81	--	143	3	Exhaust Port Temperature #15 Sensor Voltage High
81	--	144	3	Exhaust Port Temperature #16 Sensor Voltage High
81	—	277	9	EGR Rate Sensor not Responding
81	—	277	12	EGR Rate Sensor Failed
82	98	--	4	Oil Level Sensor Input Voltage Low
82	101	--	4	Crankcase Pressure Sensor Input Voltage Low
82	153	--	4	Extended Crankcase Pressure Input Voltage Low
82	164	--	4	Injection Control Pressure Sensor Input Voltage Low
82	173	--	4	Exhaust Temperature Sensor Input Voltage Low
82	411	—	4	EGR Delta Pressure Sensor Circuit Failed Low
82	412	—	4	EGR Temperature Circuit Failed Low
82	412	—	12	EGR Temperature Network Sensor Failed
82	--	129	4	Exhaust Port Temperature #1 Sensor Voltage Low
82	--	130	4	Exhaust Port Temperature #2 Sensor Voltage Low
82	--	131	4	Exhaust Port Temperature #3 Sensor Voltage Low
82	--	132	4	Exhaust Port Temperature #4 Sensor Voltage Low

DDEC V Code	PID	SID	FMI	DESCRIPTION
82	--	133	4	Exhaust Port Temperature #5 Sensor Voltage Low
82	--	134	4	Exhaust Port Temperature #6 Sensor Voltage Low
82	--	135	4	Exhaust Port Temperature #7 Sensor Voltage Low
82	--	136	4	Exhaust Port Temperature #8 Sensor Voltage Low
82	--	137	4	Exhaust Port Temperature #9 Sensor Voltage Low
82	--	138	4	Exhaust Port Temperature #10 Sensor Voltage Low
82	--	139	4	Exhaust Port Temperature #11 Sensor Voltage Low
82	--	140	4	Exhaust Port Temperature #12 Sensor Voltage Low
82	--	141	4	Exhaust Port Temperature #13 Sensor Voltage Low
82	--	142	4	Exhaust Port Temperature #14 Sensor Voltage Low
82	--	143	4	Exhaust Port Temperature #15 Sensor Voltage Low
82	--	144	4	Exhaust Port Temperature #16 Sensor Voltage Low
82	—	277	12	EGR Rate Sensor Failed
82	412	—	9	EGR Temperature Smart Sensor not Responding
82	412	—	12	EGR Temperature Smart Sensor failed
83	73	—	0	Pump Pressure High
83	98	--	0	Oil Level High
83	101	--	0	Crankcase Pressure High
83	153	--	0	Extended Crankcase Pressure High
83	173	--	0	Exhaust Temperature High
83	411	—	0	EGR Delta Pressure High
83	412	—	0	EGR Temperature High
83	--	129	0	Exhaust Port Temperature #1 High
83	--	130	0	Exhaust Port Temperature #2 High
83	--	131	0	Exhaust Port Temperature #3 High
83	--	132	0	Exhaust Port Temperature #4 High
83	--	133	0	Exhaust Port Temperature #5 High
83	--	134	0	Exhaust Port Temperature #6 High
83	--	135	0	Exhaust Port Temperature #7 High
83	--	136	0	Exhaust Port Temperature #8 High
83	--	137	0	Exhaust Port Temperature #9 High
83	--	138	0	Exhaust Port Temperature #10 High
83	--	139	0	Exhaust Port Temperature #11 High
83	--	140	0	Exhaust Port Temperature #12 High
83	--	141	0	Exhaust Port Temperature #13 High
83	--	142	0	Exhaust Port Temperature #14 High
83	--	143	0	Exhaust Port Temperature #15 High
83	--	144	0	Exhaust Port Temperature #16 High

DDEC V Code	PID	SID	FMI	DESCRIPTION
84	98	--	1	Oil Level Low
84	101	--	1	Crankcase Pressure Low
84	153	--	1	Extended Crankcase Pressure Low
85	190	--	0	Engine Overspeed
85	190	--	14	Engine Overspeed Signal
86	73	--	3	Pump Pressure Sensor Input Voltage High
86	108	--	3	Barometric Pressure Sensor Input Voltage High
87	73	--	4	Pump Pressure Sensor Input Voltage Low
87	108	--	4	Barometric Pressure Sensor Input Voltage Low
88	20	--	1	High Range Coolant Pressure Low
88	109	--	1	Coolant Pressure Low
89	95	--	0	Fuel Restriction High
89	111	--	12	Maintenance Alert Coolant Level Fault

5. ENGINE OIL LEVEL

Check the oil level daily with the engine stopped. If the engine has just been stopped and is warm, wait at least 10 minutes to allow the oil to drain back to the oil pan before checking. Wipe the dipstick clean then check oil level. The level should always be within the safe range on the dipstick (Fig. 12). Add the proper grade of oil to maintain the correct level on the dipstick. All diesel engines are designed to consume some oil, so a periodic addition of oil is normal.

⚠ WARNING ⚠

Touching a hot engine can cause serious burns.

⚠ CAUTION ⚠

Do not overfill. Oil may be blown out through the crankcase breather if the crankcase is overfilled.

⚠ CAUTION ⚠

Clean end of tube before removing the dipstick to prevent oil contamination.

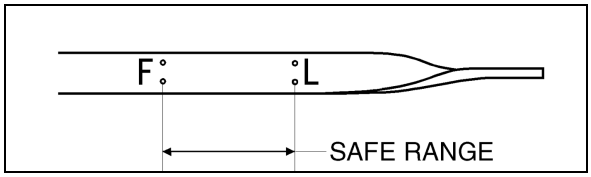

FIGURE 12: ENGINE OIL LEVEL DIPSTICK 01027

⚠ CAUTION ⚠

If the oil level is constantly above normal and excess lube oil has not been added to the crankcase, consult with an authorized Detroit Diesel service outlet for the cause. Fuel or coolant dilution of lube oil can result in serious engine damage.

The vehicle may be provided with an oil reserve tank in the engine compartment. To adjust oil level, open the oil reserve tank drain valve and allow oil to discharge into the engine until the "Full" mark on the dipstick is reached then close the valve. Check oil reserve tank level and pour oil in the reserve tank if necessary (Fig. 13).

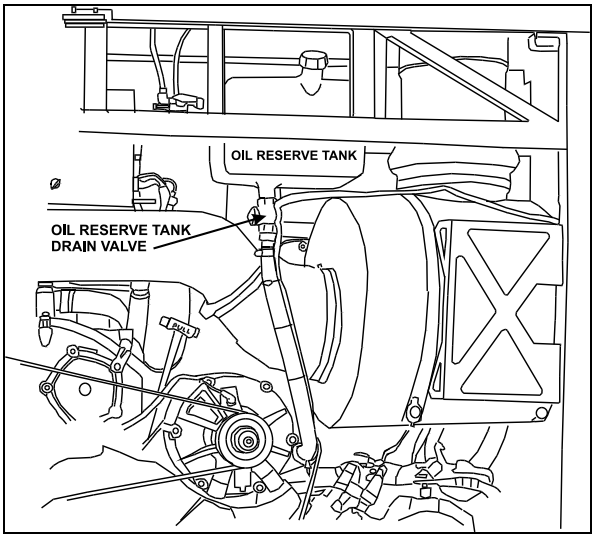

FIGURE 13: OIL RESERVE TANK
01063

6. ENGINE OIL AND FILTER CHANGE

Both the oil and filter should be changed every 12,500 miles (20,000 km) or once a year, whichever comes first. However, changes that are more frequent may be required when the engine is subject to high levels of contamination and/or overheating. Change intervals may be decreased or gradually increased with experience on specific lubricants until the most practical service condition has been established. Always refer to the lubricant manufacturer's recommendations (analysis of drained oil can be helpful).

⚠ CAUTION ⚠

Do not use solvents to dilute the engine oil when draining. Dilution of fresh oil can occur which may be detrimental to the engine.

Change engine oil with the vehicle on a flat and level surface and with the parking brake applied. It is best to drain the oil when the engine is still warm.

1. From under the vehicle, remove the engine drain plug on the oil pan. Allow oil to drain (Fig. 14).

⚠ WARNING ⚠

Hot engine oil can cause serious burns. Wear coveralls with sleeves pulled down and gloves to protect hands.

2. Reinstall the drain plug.
3. Remove the spin-on filter cartridge using a ½" drive socket wrench and extension.
4. Dispose of the used oil and filter in an environmentally responsible manner in accordance with state and/or federal (EPA) recommendations.

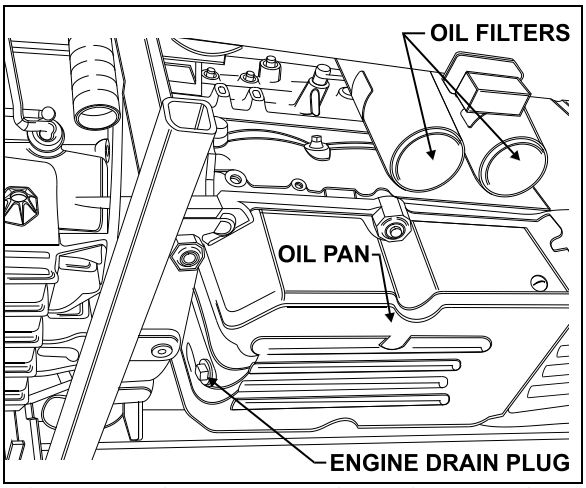

FIGURE 14: ENGINE DRAIN PLUG AND OIL FILTERS
01029

5. Clean the filter adapter with a clean rag.
6. Lightly coat the filter gasket (seal) with clean engine oil.
7. Install the new filter on the adapter and tighten manually until the gasket touches the mounting adapter head. Tighten full-flow filters an additional two-thirds of a turn manually. Then, manually tighten bypass filter one full turn.

⚠ CAUTION ⚠

Overtightening may distort or crack the filter adapter.

8. Remove the engine-oil filler cap and pour oil in the engine until it reaches the "FULL" mark on the dipstick (Fig. 12).
9. Start and run the engine for a short period and check for leaks. After any leaks have been corrected, stop the engine long enough for oil from various parts of the engine to drain back to the crankcase (approximately 20 minutes).
10. Add oil as required to bring the level within the safe range on the dipstick (Fig. 12).

7. RECOMMENDED ENGINE OIL TYPE

To provide maximum engine life, lubricants shall meet the following specifications: SAE Viscosity Grade: 15W-40 API Classification: CI-4.

NOTE

Monograde oils should not be used in these engines regardless of API Service Classification.

NOTE

The use of supplemental oil additives is discouraged from use in Detroit Diesel Engines.

Synthetic oils: Synthetic oils may be used in Detroit Diesel engines provided they are API-licensed and meet the performance and chemical requirements of non-synthetic oils outlined previously. Synthetic oils do not permit extension of recommended oil drain intervals.

Lubricant Selection World Wide: Oils meeting API CD or CC specifications may be used if they also meet military specification MIL-L-2104 D or E. Oils which meet European CCMC D4 specifications may also be used.

Modification of drain interval may be necessary, depending on fuel quality. Contact Detroit Diesel Corporation for further guidance.

8. POWER PLANT ASSEMBLY REMOVAL

To access the engine or engine-related components, the vehicle power plant assembly must be removed as a whole unit by means of a slide-out cradle. The power plant assembly includes the engine, transmission (including retarder if so equipped), air compressor, alternator and transmission oil cooler.

Remove the power plant assembly as follows:

⚠ CAUTION ⚠

Tag hoses and cables for identification before disconnecting in order to facilitate reinstallation. Plug all openings to prevent dirt from entering the system.

NOTE

No parts within the ECM are serviceable. If found defective, replace the complete ECM unit.

1. Disconnect the battery or batteries from the starting system by removing one or both of the battery cables from each battery system. With the electrical circuit disrupted, accidental contact with the starter button will not produce an engine start. In addition, the Electronic Unit Injectors (EUI) will be disabled, preventing any fuel delivery to the injector tips.

⚠ WARNING ⚠

Due to the heavy load of the rear bumper assembly, it must be adequately supported before attempting to remove it.

2. Remove the rear bumper assembly from the vehicle. Refer to Section 18, BODY, under "REAR BUMPER REMOVAL ".
3. Drain the engine cooling system. Refer to Section 05, COOLING under "DRAINING COOLING SYSTEM".

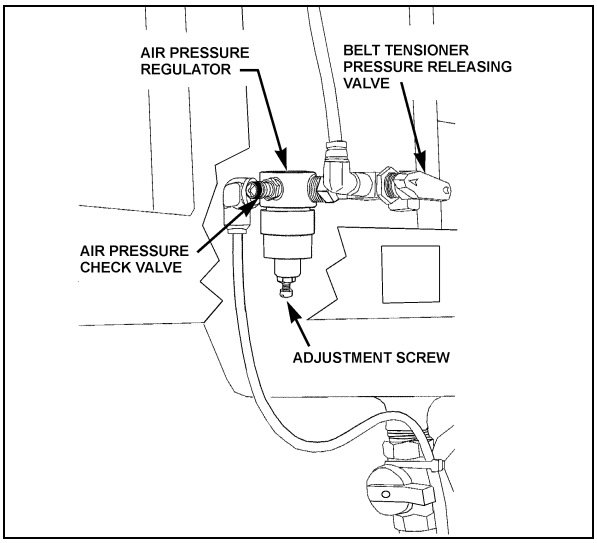

FIGURE 15: BELT TENSIONER VALVE
12200

4. Locate the belt tensioner pressure releasing valve (Fig. 15). Turn pressure releasing valve handle counterclockwise in order to release pressure in belt-tensioner air bellows and loosen belts. Remove the belts.
5. To release all pressure from the air system. Refer to Section 12, BRAKES & AIR SYSTEM for instructions.
6. Disconnect and remove the engine-air intake duct mounted between air cleaner housing and turbocharger inlet (1, Fig.17, 18).

⚠ CAUTION ⚠

To avoid damage to turbocharger, cover the turbocharger inlet opening to prevent foreign material from entering.

7. Disconnect and remove the air intake duct mounted between the air cooler outlet and the engine intake (2, Fig.17, 18).
8. Disconnect and remove section of coolant pipe assembly mounted between the radiator outlet and the water pump inlet (3, Fig.17, 18).
9. Disconnect the coolant delivery hose located close to the water pump.
10. Disconnect the electric fan-clutch connector, close to the water pump (Fig. 17, 18).
11. Dismantle the air bellows from the upper bracket of the fan-drive assembly tensioner. Remove the upper bracket (4, Fig.17, 18).

12. If necessary, remove the fan drive from the engine compartment by removing the four retaining bolts, washers and nuts securing the fan drive to the floor.

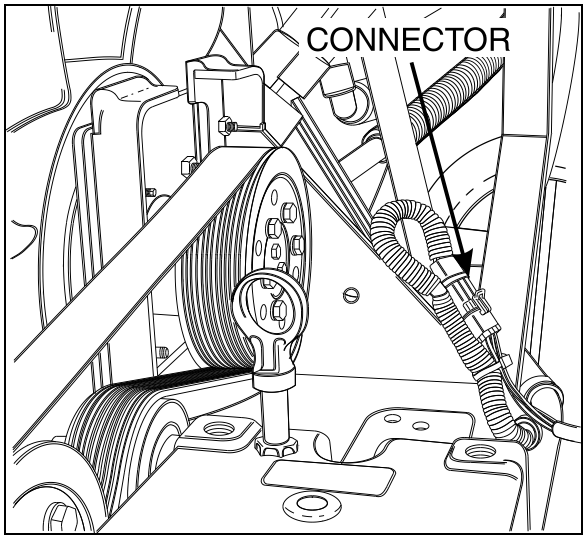

FIGURE 16: ELECTRIC FAN-CLUTCH CONNECTOR 010XX

13. Disconnect and remove the air intake duct mounted between the turbocharger outlet and the air cooler inlet (5, Fig. 17, 18).

14. Disconnect two vent hoses from the thermostat housing and from the coolant pipe assembly.

15. Disconnect and remove a section of coolant pipe assembly mounted between the thermostat housings and the radiator inlet.

16. Disconnect and remove the small hose connected to the heater line valve and to the water pump.

17. Disconnect the small heater hose located on the cylinder head at the back of the engine.

18. Disconnect and remove the exhaust pipe mounted between the turbocharger outlet and the exhaust bellows. If necessary, refer to Section EXHAUST SYSTEM under MUFFLER REMOVAL AND INSTALLATION".

⚠ CAUTION ⚠

To avoid damage to turbocharger, cover the turbocharger outlet opening to prevent foreign material from entering.

19. Disconnect the steel-braided airline from the A/C compressor air bellows.

20. Disconnect the power steering pump supply and discharge hoses. Cap hose openings immediately to limit fluid loss. Remove retaining clips from cradle (6, Fig. 17, 18).

21. Disconnect the oil delivery hose from the valve located at the reserve tank drain (7, Fig. 17, 18).

22. Disconnect the block heater connector from the power steering pump if applicable.

23. Close engine fuel supply shutoff valve on primary fuel filter. Disconnect the fuel line connected to inlet port. On vehicles equipped with the optional water-separator-fuel-filter, disconnect the connector and remove cable ties from cradle.

24. Disconnect the air compressor discharge, governor steel-braided airlines and manual filling airlines from compressor. Remove retaining clips.

25. Disconnect the hose connecting the compressor head to the sump tank.

26. Disconnect ground cables from rear subframe ground-stud located close to the starter motor.

27. Disconnect positive cable (red terminal) from starting motor solenoid.

28. Disconnect the power plant wiring-harness main connectors from ECM and remove retaining clips from engine compartment backwall.

29. On vehicles equipped with an automatic transmission provided with a hydraulic output retarder, disconnect steel-braided airline from pressure regulator output. The pressure regulator is mounted in the upper section of engine compartment backwall and is accessible through the engine compartment R.H. side door.

30. Disconnect fuel return line from bulkhead fixed on engine cylinder head end.

31. On vehicles equipped with an electrically operated cold-starting aid, disconnect the delivery hose from the starting-aid cylinder solenoid valve. Remove cable ties securing hoses.

32. Disconnect turbo boost pressure gauge airline from engine air intake.

33. Only if the vehicle is equipped with a retarder, remove the transmission rubber-damper assembly above transmission by removing: nut, bushing, rubber damper, rubber damper guide, bolt and washer. Remove the rubber damper bracket from transmission.

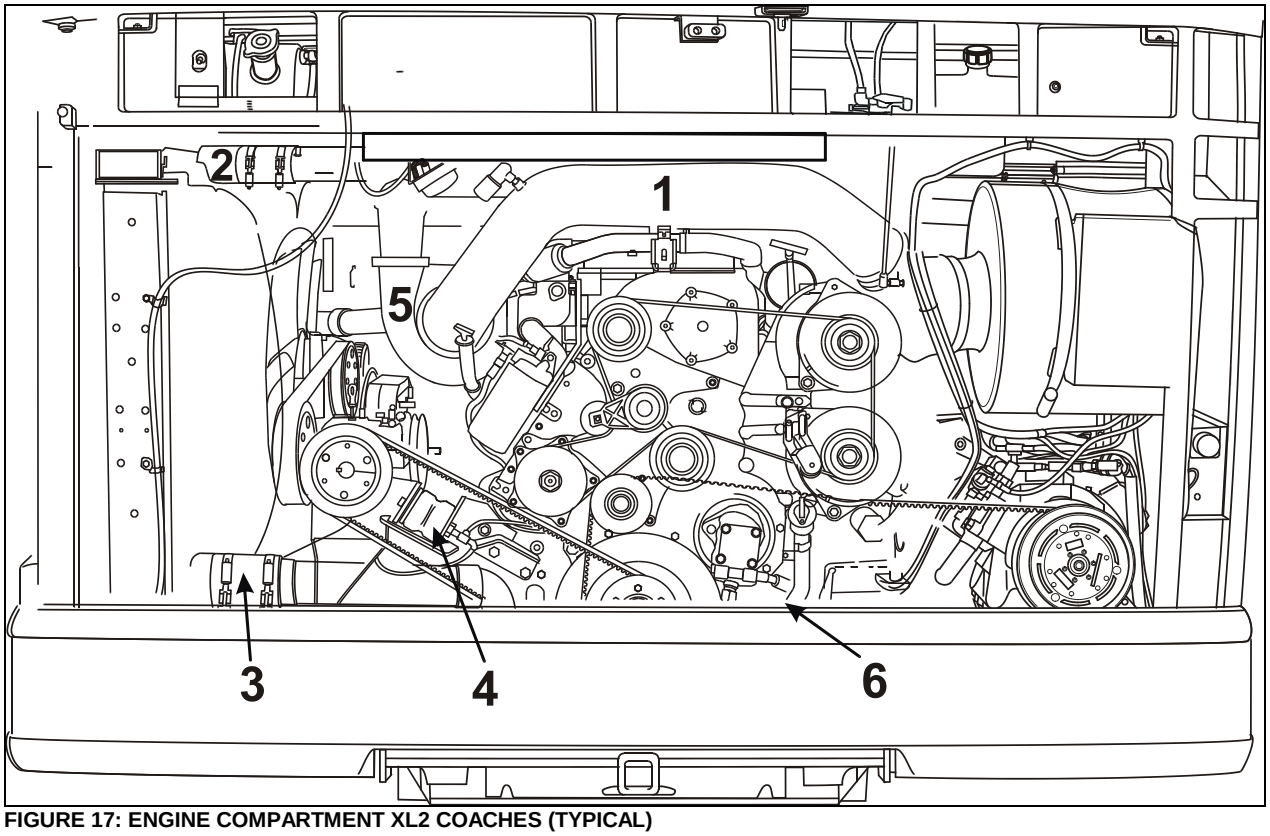

FIGURE 17: ENGINE COMPARTMENT XL2 COACHES (TYPICAL)

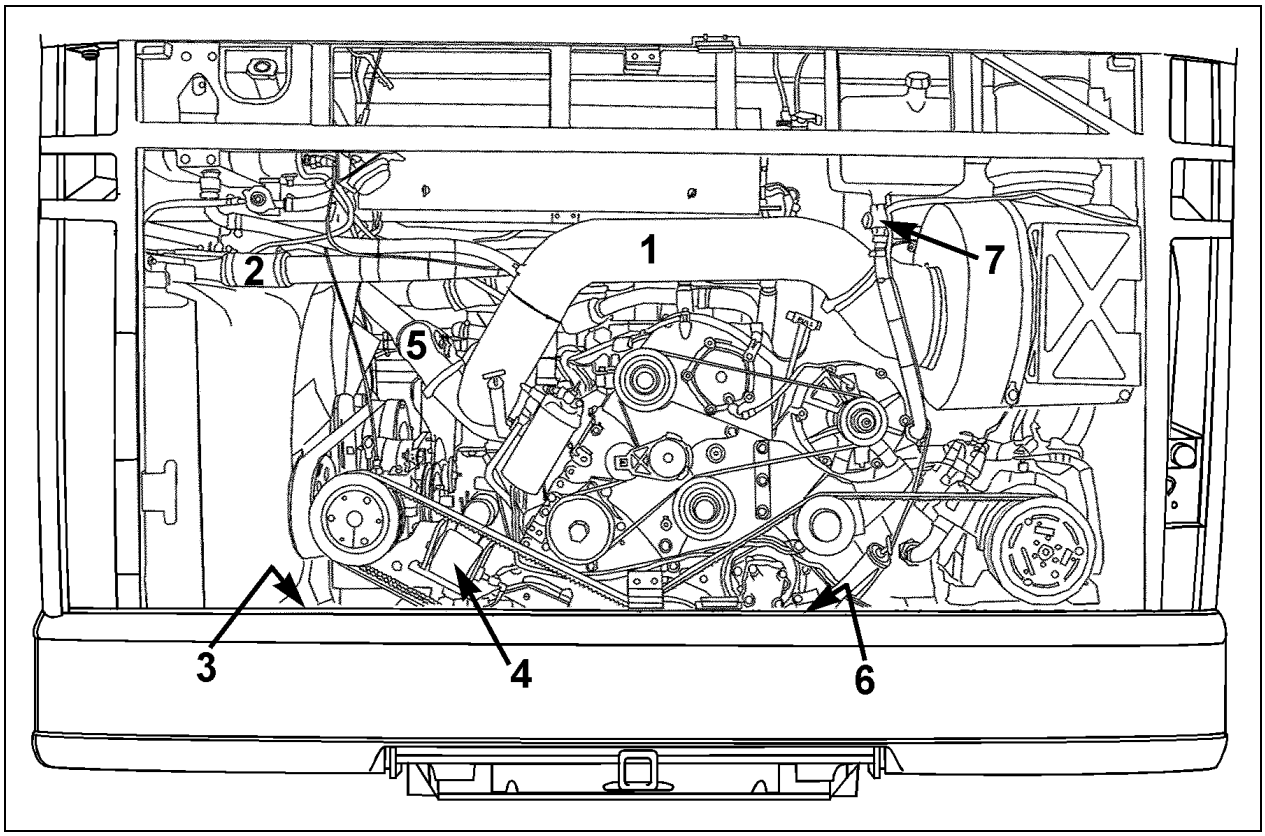

FIGURE 18: ENGINE COMPARTMENT XL2 MTH (TYPICAL)

01112

34. Disconnect connectors from transmission. On the left side: four on rear side with one close to yoke. On right side: close to the solenoid valve of the output retarder.
35. From under the vehicle, disconnect the propeller shaft as detailed in Section 09, under heading "Propeller Shaft Removal".
36. Inspect the power plant assembly to ensure that nothing will interfere when sliding out the cradle. Check for connections or hoses not mentioned in this list as some vehicles are equipped with special or aftermarket components.
37. Remove the six retaining bolts, washers and nuts securing the power plant cradle to the vehicle rear subframe (Fig. 20).

NOTE
Check if any spacer(s) have been installed between power plant cradle and vehicle rear subframe, and if so, note position of each washer for reinstallation purposes.

38. Using a forklift, with a minimum capacity of 4,000 lbs (1 800 kg), slightly raise the power plant cradle.
39. Pull engine out slowly from the engine compartment. Make sure all lines, wiring and accessories are disconnected and are not tangled.

⚠ CAUTION ⚠
Due to the minimum clearance between the power plant equipment and the top of the engine compartment, extreme care should be used to raise the power plant cradle, just enough to free the cradle. Clearance between power plant cradle and mounting rail should range between ¼" and ½" (6-12 mm).

9. POWER PLANT ASSY. INSTALLATION

To install a power plant assembly, follow the same procedure as in "Power Plant Assembly Removal" except in reverse order, then proceed with the following:

1. Torque the power plant cradle mounting bolts to 190 lbf-ft (255 Nm).

* For vehicles equipped with an Allison automatic transmission and a retarder:

a) Install transmission bracket (Fig. 19), tighten to 71-81 lbf-ft (96-110 Nm).

b) Install the transmission's rubber damper assembly above transmission by assembling: bolt, washer, rubber damper guide, rubber damper, bushing nut.

c) Respect damper tolerance of 58 mm (Fig. 19)

2. If fan drive has been removed, reinstall and align as per Section 05, COOLING SYSTEM, under "FAN DRIVE ALIGNMENT".
3. Refill cooling system with saved fluid (refer to Section 05, COOLANT SYSTEM).
4. Once engine fuel system has been drained, it will aid restarting if fuel filters are filled with fuel oil (refer to Section 03, FUEL SYSTEM).

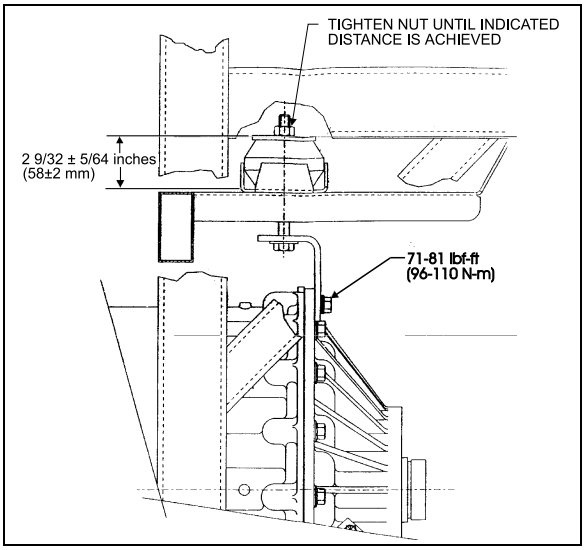

FIGURE 19: RUBBER DAMPER TOLERANCE 07014

5. Start engine for a visual check. Check fuel, oil, cooling, pneumatic and hydraulic system connections for leakage. Test operation of engine controls and accessories.

10. VALVE COVER REMOVAL

Refer to the series 60 Detroit diesel service manual for injectors and valves adjustment. Access to engine cover differs depending on vehicle model.

Wait until engine is cold prior to working on vehicle.

10.1 XL2-45 COACHES AND MOTORHOMES

1. Remove air intake pipe.
2. Remove the after CAC (Charger-Air-Cooler) air pipe.
3. Disconnect ventilation pipe from valve cover.

4. Remove trap door located in the middle rear end of vehicle.

NOTE
On coaches, last seat has to be removed to access trap door. On motorhomes, it will depend on interior design

5. Remove engine cover.
6. Adjust Jake brakes (if applicable), injectors and valves using Detroit Diesel service manual for series 60 engines.
7. Verify engine cover gasket and replace if necessary.

NOTE
New gasket must be ordered directly from Detroit Diesel.

8. Reinstal engine cover with a tightening torque of 18-22 Lbf-ft (25-30 Nm).
9. Connect ventilation pipe to engine cover.
10. Reinstall air intake and after CAC air pipes.
11. Reinstall trap door, seats or interior finish for motorhomes.

11. JAKE BRAKE

Refer to both "The Jake Brake Troubleshooting and Maintenance Manual" and "Installation Manual for Model 790 Engine Brakes" for troubleshooting and installation procedures. They are annexed at the end of this section.

12. ENGINE MOUNTS

The power plant assembly is mounted to the cradle by means of rubber mounts.

Two rubber mounts are used at the front of the engine while two others are mounted on each side of the flywheel housing (Fig. 20).

It is recommended that new rubber mounts be installed at each major overhaul.

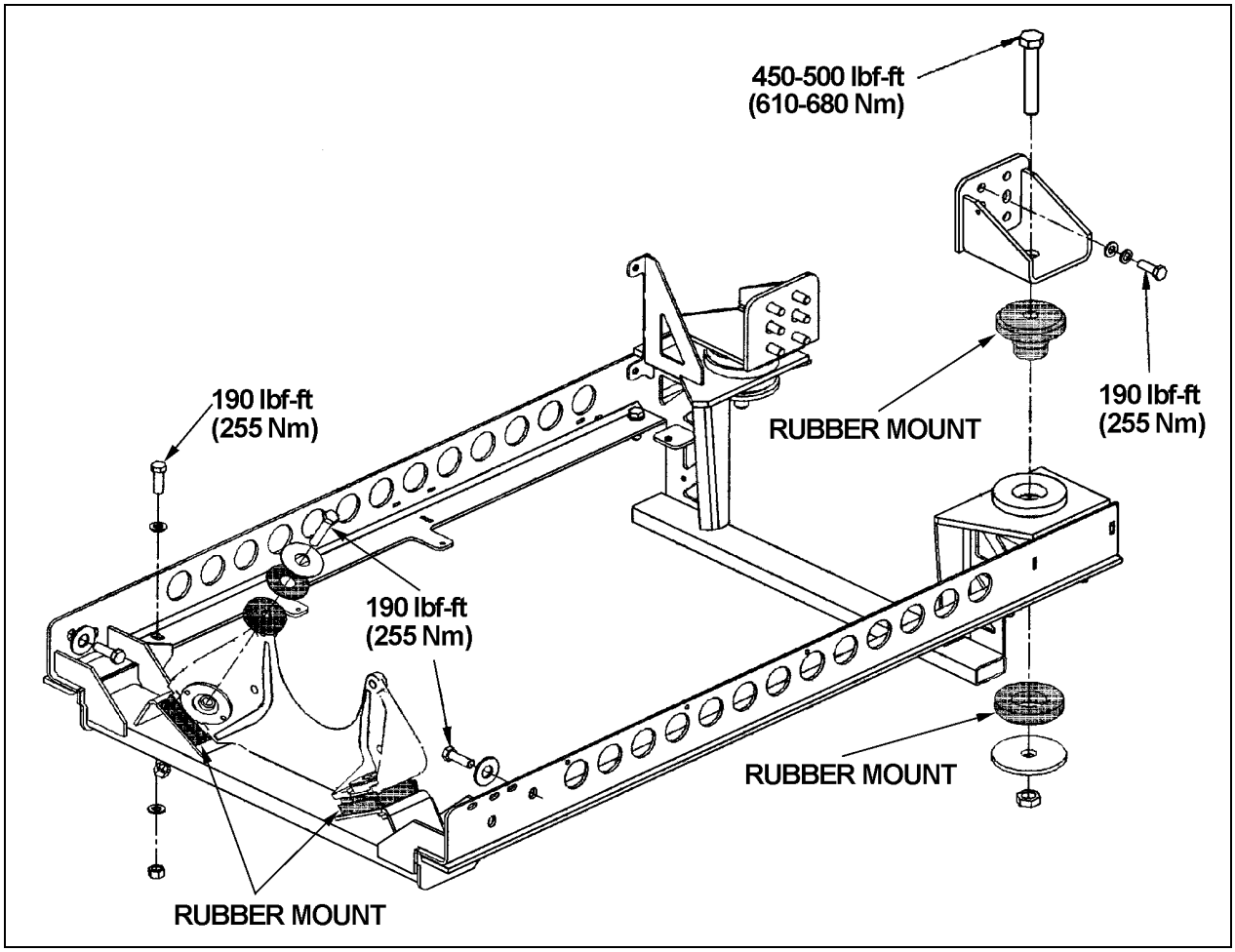

FIGURE 20: POWER PLANT CRADLE INSTALLATION 01140

13. ENGINE TROUBLESHOOTING GUIDE

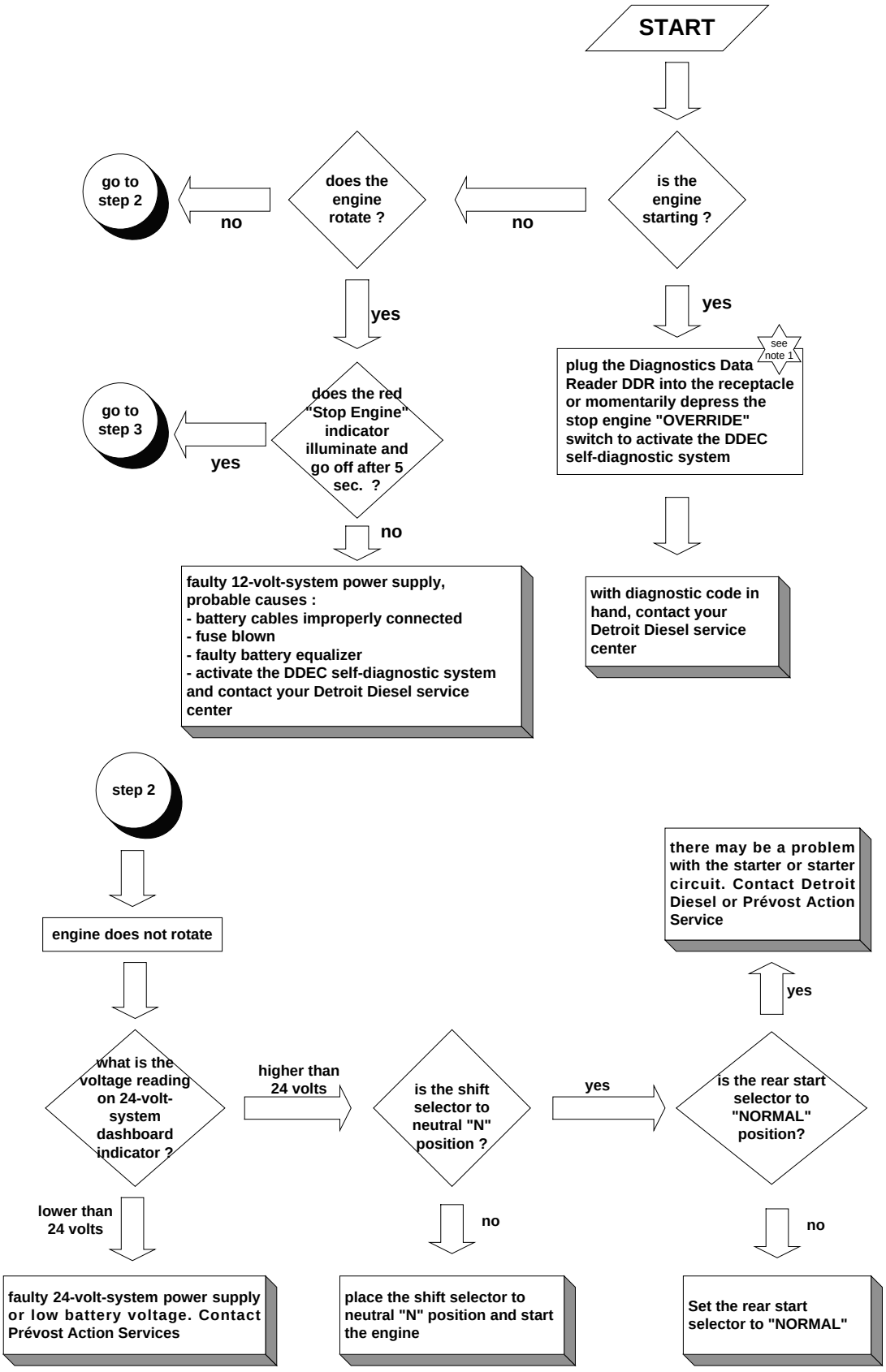

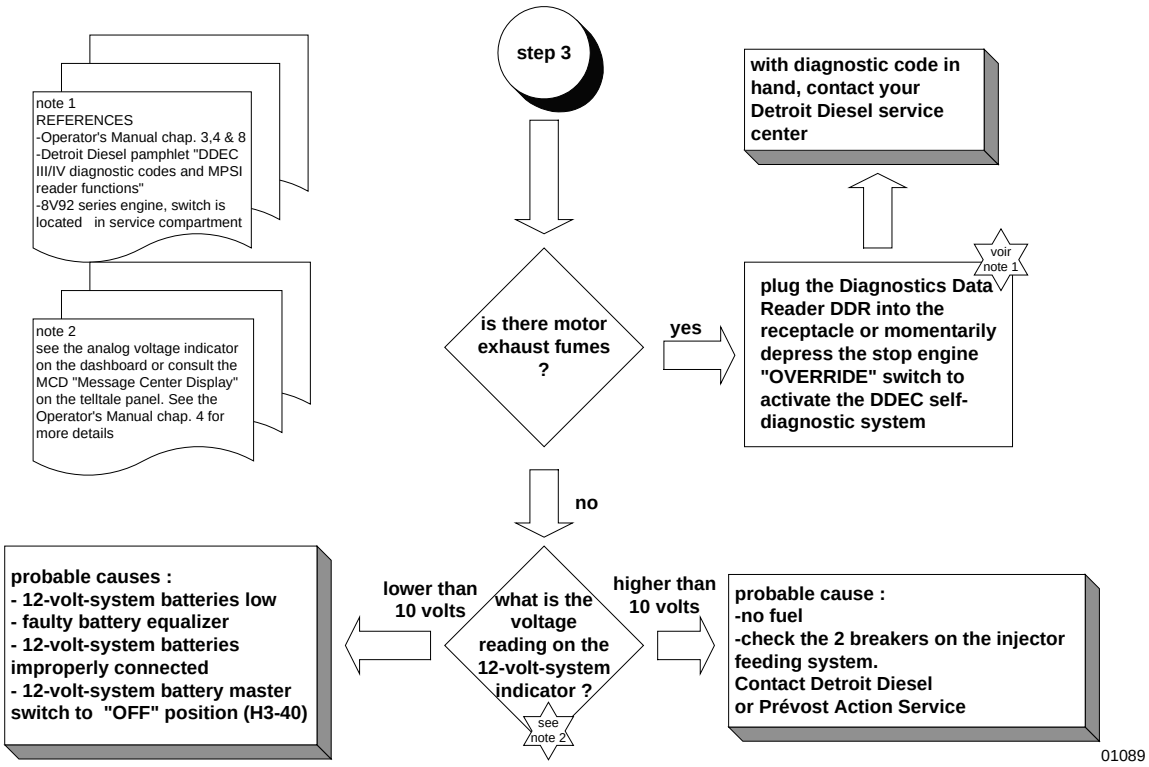

14. SPECIFICATIONS

Series 60 Engine

Make ..... Detroit Diesel

Type ..... Diesel four cycle/in-line engine

Description ..... Turbo/Air to air charge cooled

No. of cylinders 6

Operating range ..... 1200-2100 RPM

Maximum RPM 2100

Lubricant

Heavy-duty engine oil SAE Viscosity Grade 15W-40, API Classification CI-4. Synthetic oil may be used if it meets the performance and chemical requirements of non-synthetic oils outlined previously. Some engine operating conditions may require exceptions to this recommendation.

⚠ CAUTION ⚠

To avoid possible engine damage, do not use single grade (Monograde) lubricants in Detroit Diesel four-cycle Series 60 engines, regardless of API classification.

Detroit Diesel Series 60 engine ratings

Series 60 engine ratings used in Prevost Car Models are listed in the following tables. The standard engine ratings are written in bold, customer may easily switch from one rating to another within the same table by having the DDEC V system reprogrammed.

Coach Base Engine (12.7L)	
380 HP	**@1800 rpm; 1350 lb-ft @1200 rpm**

Coach Standard Engine (12.7L)	
425 HP	@1800 rpm; 1450 lb-ft @1200 rpm
435 HP	**@1800 rpm; 1450 lb-ft @1200 rpm**
445 HP	@1800 rpm; 1450 lb-ft @1200 rpm
425/445 HP	@1800 rpm; 1450 lb-ft @1200 rpm

XL2 Entertainer & 40' MTH Engine (12.7L)	
445 HP	@1800 rpm; 1550 lb-ft @1200 rpm
450 HP	@1800 rpm; 1550 lb-ft @1200 rpm
455 HP	**@1800 rpm; 1550 lb-ft @1200 rpm**
445/455 HP	@1800 rpm; 1550 lb-ft @1200 rpm

XL2 45' MTH Engine (14.0L)	
470 HP	@1800 rpm; 1650 lb-ft @1200 rpm
490 HP	@1800 rpm; 1650 lb-ft @1200 rpm
515 HP	**@1800 rpm; 1650 lb-ft @1200 rpm**
470/515 HP	@1800 rpm; 1650 lb-ft @1200 rpm

Capacity

Oil reserve tank ..... 8.4 US qts (8.0 L)

Engine oil level quantity

Oil Pan Capacity, Low Limit ..... 26 quarts/25 liters

Oil Pan Capacity, High Limit ..... 32 quarts/30 liters

Total Engine Oil Capacity with Filters ..... 38 quarts/36 liters

Lubricating oil filter elements

Make ..... AC Rochester Div. GMC # 25014505

Make ..... A/C Filter # PF-2100

Type ..... Full Flow

Prévost number 510458

Torque specification

Engine oil filter ..... Tighten 2/3 of a turn after gasket contact

Filters

Engine Air Cleaner Filter

Make ..... Nelson # 70337-N

Prévost number 530197

Engine Coolant Filter/Conditioner

Make ..... Nalco Chemical Company # DDF3000

Make ..... Detroit Diesel # 23507545

Prévost number 550630

NOTE
For primary and secondary fuel filters, refer to Specifications in section 03

SECTION 03: FUEL SYSTEM

CONTENTS

1. FUEL SYSTEM DESCRIPTION 03-3

2. FUEL LINES AND FLEXIBLE HOSES 03-4

3. FUEL VALVES 03-4

4. FILTERS AND WATER SEPARATOR 03-4

4.1 FUEL FILTER/WATER SEPARATOR SERVICING 03-4
4.2 FUEL FILTER SERVICING (PRIMARY AND SECONDARY) 03-5
4.3 DAVCO FUEL PRO 382 03-6
4.4 PREHEATER FUEL FILTER 03-6

5. FUEL TANK 03-7

5.1 TANK REMOVAL 03-7
5.1.1 Main Fuel Tank 03-8
5.1.2 Auxiliary Fuel Tank (if so equipped) 03-8
5.1.3 Transverse Fuel Tank 03-8
5.2 TANK INSTALLATION 03-8
5.3 FUEL TANK VERIFICATION 03-10
5.4 POLYETHYLENE FUEL TANK REPAIR 03-10

6. PRIMING FUEL SYSTEM 03-10

7. FUEL PUMP INSTALLATION 03-11

8. FUEL OIL SPECIFICATIONS 03-11

9. AIR CLEANER (DRY TYPE) 03-11

9.1 PRE-CLEANER SERVICING 03-11
9.2 AIR CLEANER SERVICING 03-11
9.3 GENERAL RECOMMENDATIONS 03-12
9.4 AIR CLEANER RESTRICTION INDICATOR 03-12

10. FUEL COOLER 03-12

11. FUEL PEDAL 03-12

11.1 FUEL PEDAL ADJUSTMENT 03-12
11.2 POTENTIOMETER REPLACEMENT 03-13

12. SPECIFICATIONS 03-13

ILLUTRATIONS

FIGURE 1: FUEL SYSTEM SCHEMATIC 03-3
FIGURE 2: MANUAL SHUT-OFF VALVES 03-4
FIGURE 3: FUEL FILTER/WATER SEPARATOR 03-5
FIGURE 4: DAVCO FUEL PRO 382 FUEL FILTER 03-6
FIGURE 5: DAVCO FUEL PRO 382 EXPLODED VIEW 03-7
FIGURE 6: 208 US GAL. MAIN FUEL TANK (XL2-45) & 90 US GAL. AUXILIARY FUEL TANK (OPTIONAL) (MTH 45) 03-9
FIGURE 7: 250 US GALLONS FUEL TANKS (MAIN TANK & TRANSVERSE FUEL TANK) (MTH 40 & MTH 45E) 03-9
FIGURE 8: FUEL TANK REPAIR 03-10
FIGURE 9: PRIME PUMP SWITCH LOCATION 03-10
FIGURE 10: FUEL PUMP LOCATION 03-11
FIGURE 11: RESTRICTION INDICATOR 03-12
FIGURE 12: FUEL COOLER LOCATION 03-12
FIGURE 13: ELECTRONIC FOOT PEDAL ASSEMBLY 03-13

1. FUEL SYSTEM DESCRIPTION

Figure 1 shows a schematic of the fuel system. Fuel is drawn from the fuel tank through a manual shut-off valve, a primary fuel filter or a fuel filter/water separator (optional) before it enters the fuel pump. If the vehicle is equipped with the optional “Davco Fuel Pro 382”, it is designed to be the only fuel filter in the system, no secondary fuel filter is necessary. Leaving the pump under pressure, the fuel flows through a secondary fuel filter and a shut-off valve, then to the cylinder head. The fuel reaches the injectors in the cylinder head through passages within the head. Excess fuel exits at the rear of the head just above the inlet, through a restrictive return fitting which maintains fuel pressure in the system. Finally, the fuel flows through the check valve and the fuel cooler before it returns to the fuel tank. One preheater is available: 104 000 BTU. If the vehicle is equipped with the 104 000 BTU preheater, the fuel is drawn from the fuel tank through the fuel filter to the preheater. Excess fuel returns to the fuel tank.

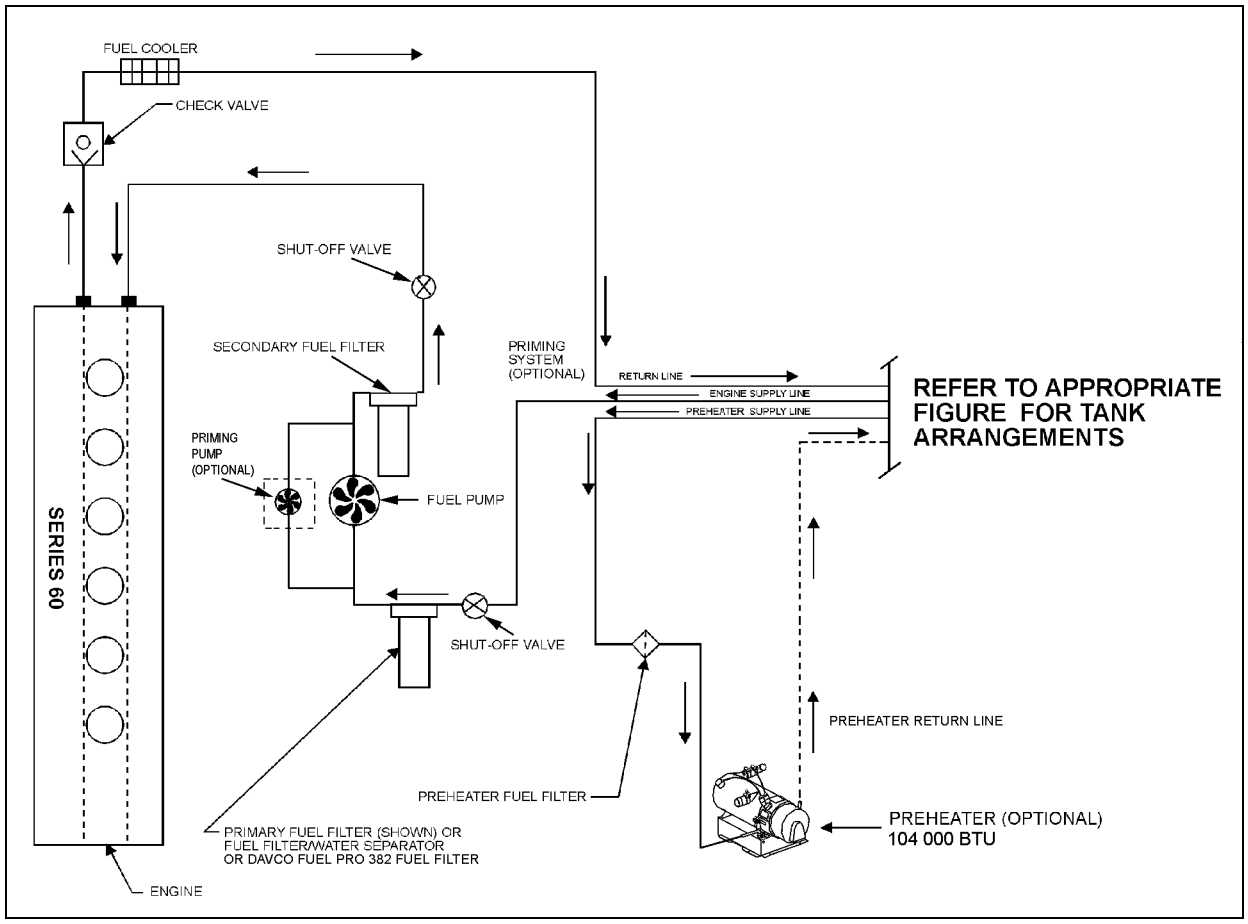

FIGURE 1: FUEL SYSTEM SCHEMATIC 03055

2. FUEL LINES AND FLEXIBLE HOSES

Make a visual check for fuel leaks at all engine-mounted fuel lines and connections and at the fuel tank suction and return lines. Since fuel tanks are susceptible to road hazards, leaks in this area may best be detected by checking for accumulation of fuel under the tank. Engine performance and auxiliary equipment is greatly dependent on the ability of flexible hoses to transfer lubricating oil, air, coolant and fuel oil. Diligent maintenance of hoses is an important step in ensuring efficient, economical and safe operation of engine and related equipment.

Check hoses daily as part of the pre-start-up inspection. Examine hoses for leaks and check all fittings, clamps and ties carefully. Make sure that the hoses are not resting on or touching shafts, couplings, and heated surfaces, including exhaust manifolds, any sharp edges or other obviously hazardous areas. Since all machinery vibrates and moves to a certain extent, clamps and ties can fatigue with age. To ensure continued proper support, inspect fasteners frequently and tighten or replace them as necessary. Refer to the schematic diagram of the fuel system (Fig. 1).

⚠ CAUTION ⚠

Oil level above the dipstick full mark or a decrease in lube oil consumption may indicate internal fuel leaks. Check oil level frequently.

3. FUEL VALVES

Manual shut-off valves on engine fuel-supply line are located on the R.H. side of engine compartment (Fig. 2). A manual shut-off valve is located at the inlet side of the primary fuel filter (fuel filter/water separator, if vehicle is so equipped) under the starter. Another manual shut-off valve is located at the outlet side of the secondary fuel filter, under the air compressor. No manual valve is required on preheater fuel-supply line, since the positive-displacement fuel pump (located close to the fuel tank) prevents fuel flow when not activated.

4. FILTERS AND WATER SEPARATOR

The fuel system is equipped with primary and secondary fuel filters for additional protection of the injectors. A fuel-filter/water-separator may be installed in primary fuel-filter location, to prevent water infiltration in engine fuel system (Fig. 2). It should be drained periodically, or when the water separator telltale light on the dashboard illuminates. To drain, loosen positive seal drain valve below separator, and tighten after water has been flushed out.

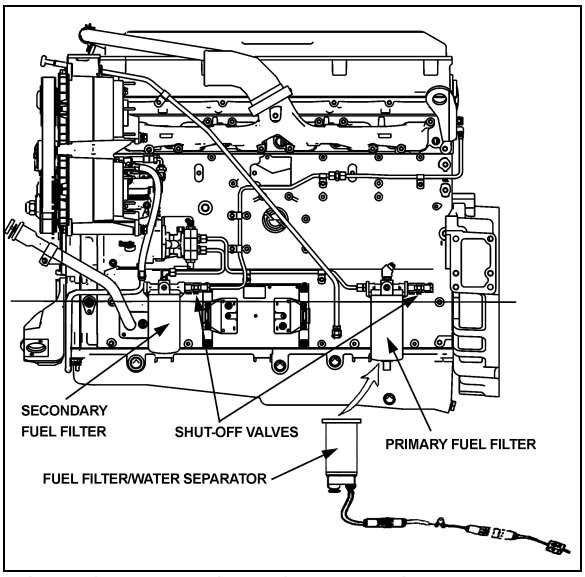

FIGURE 2: MANUAL SHUT-OFF VALVES 03060

NOTE

The operating conditions and cleanliness of type of fuel used determine the service intervals of the filter/water separator element and the secondary fuel filter cartridge.

4.1 FUEL FILTER/WATER SEPARATOR SERVICING

The fuel filter/water separator is located on the starter side of the engine, below the starter. The water separator must be drained periodically or when the telltale light on the dashboard illuminates.

Replace the water separator element as follows:

1. Drain the fuel filter/water separator as stated previously.
2. With engine "OFF" and engine fuel supply line valves closed; remove the filter element/bowl assembly from cover (for valve location, see *"3. FUEL VALVES"* in this section).

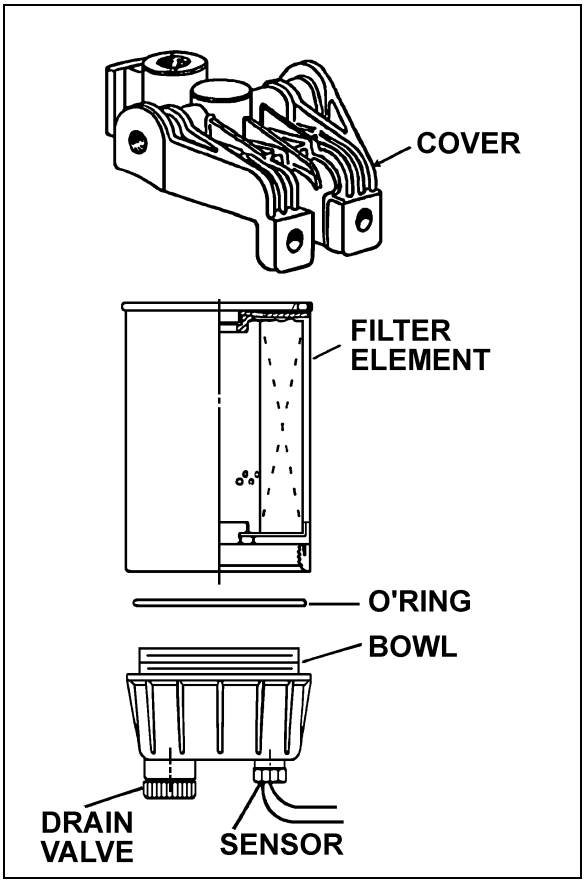

FIGURE 3: FUEL FILTER/WATER SEPARATOR 03025

3. Separate bowl from filter element. Clean bowl and O-ring groove.

NOTE
Bowl is reusable, do not discard.

4. Lubricate O-ring with clean diesel fuel or motor oil and place it in bowl groove.

5. Screw new filter element onto bowl snugly by hand.

⚠ CAUTION ⚠
Do not use tool to tighten. Tighten by hand only.

6. Lubricate filter seal with clean diesel fuel or motor oil.

7. Fill filter element/bowl assembly with clean diesel fuel and attach onto cover. Hand tighten an additional 1/3 to 1/2 turn after making full seal contact.

8. Open valves of the engine fuel supply line.

9. Run the engine and check for leaks.

⚠ CAUTION ⚠
If the water separator continuously requires draining, it is possible that water or sediment has accumulated in the fuel tank. To correct this situation, open the drain plug under the tank when the fuel gauge indicates tank is 1/4 full in order to drain any contaminant.

4.2 FUEL FILTER SERVICING (PRIMARY AND SECONDARY)

The primary and secondary fuel filters are located on the R.H. side of the engine. The primary filter is located below the starter, and the secondary fuel filter is below the air compressor. They are of a spin-on type and must be replaced every 12,500 miles (20 000 km) or once a year, whichever comes first. The primary fuel filter is equipped with a positive seal drain-valve to prevent water infiltration in engine fuel system. To drain, loosen positive seal drain-valve below filter and tighten after water has been flushed out.

A method of determining when filters are clogged to the extent that they should be changed is based on the fuel pressure at the cylinder head fuel inlet fitting and the inlet restriction at the fuel pump. In a clean system, the maximum pump-inlet restriction should not exceed 6 inches of mercury (20.3 kPa) and must not exceed 12 inches of mercury (41 kPa) with a dirty system.

At normal operating speeds and with the standard 0.080" restriction fittings, the fuel pressure at the cylinder head inlet is 50-75 psi (345-577 kPa). Change the fuel filters whenever the inlet restriction at the fuel pump reaches 12 inches of mercury (42 kPa) at normal operating speeds. Also, change whenever the fuel pressure at the cylinder head inlet fitting falls to the minimum fuel pressure given above.

Change the filter cartridge(s) as follows:

NOTE
Use a suitable band wrench or filter wrench, such as J22775, to remove the filters.

1. Stop engine, shut off the engine fuel supply line valves (for valve location, See *"3. FUEL VALVES").* Unscrew and discard filters.
2. Fill new filter replacement cartridge(s) with clean fuel oil, about two thirds (2/3). Apply a thin coat of clean fuel oil on gasket.
3. Install new filters. Tighten until filter is snug against the gasket, with no side movement. Rotate an additional 1/2 turn by hand.
4. Open engine fuel supply line valves.

⚠ CAUTION ⚠

Mechanical tightening of the fuel filters is not recommended and may result in seal and/or cartridge damage. Tighten the fuel filters by hand only.

5. Start the engine and check for leaks.

NOTE

There is a fuel system shut-off valve on the discharge side of the secondary fuel filter. This check valve is designed to prevent fuel loss at time of filter replacement.

4.3 DAVCO FUEL PRO 382

The optional Fuel Pro 382 diesel fuel filter system consists of a permanently mounted fuel processor, a replaceable filter element, a filter element cover and collar and a fluid filter base assembly. This system is installed between the fuel tank and the fuel pump and is designed to be the only fuel filter in the fuel system. The filter serves as a water separator as well as a fuel filter (refer to figure 4).

When new, the fuel level as seen through the clear cover in the 382 filter is very low. It rises as dirt collects on the filter from the bottom up. Restriction remains consistently low because fuel always flows through clean, new media. Change filter when fuel level reaches the top of filter element (refer to figure 5).

Filter renewal:

1. Stop engine;
2. Drain fuel by opening the drain valve;
3. Untighten upper collar, remove cover;
4. Replace filter element;
5. Check O-Rings and components for wear;
6. Replace cover, hand tighten collar;
7. Pour fuel up to bottom of filter element through spin off cap located on top of cover.
8. Start engine, raise rpm for 2-3 minutes, hand tighten collar again.

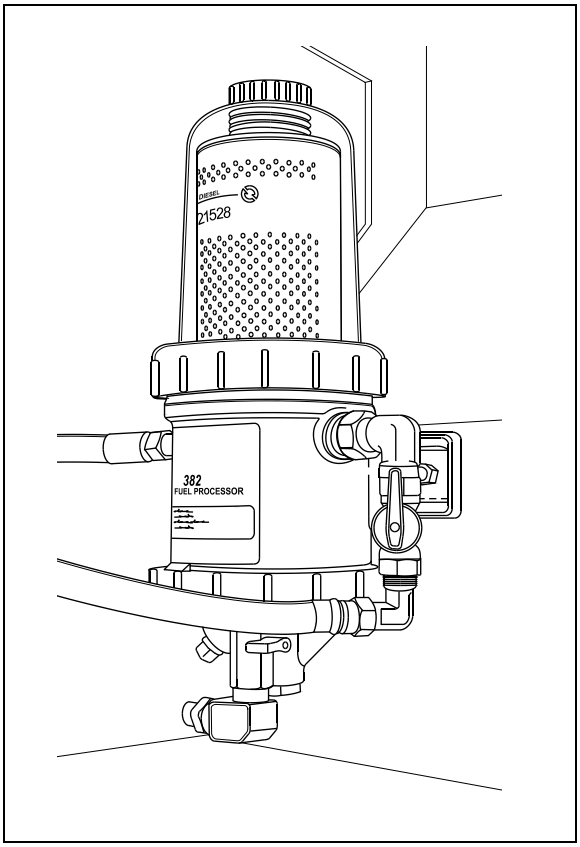

FIGURE 4: DAVCO FUEL PRO 382 FUEL FILTER 03032

NOTE

Fuel Pro 382 also accepts standard secondary spin-on fuel filters.

ENVIRONMENTAL NOTICE

Diesel fuel is an environmentally hazardous product. Dispose in an environmentally friendly manner.

4.4 PREHEATER FUEL FILTER

The preheater fuel filter is located above the preheater, in the L.H. side rear service compartment. Replace the filter every 50,000 miles (80 000 km) or once a year, whichever comes first.

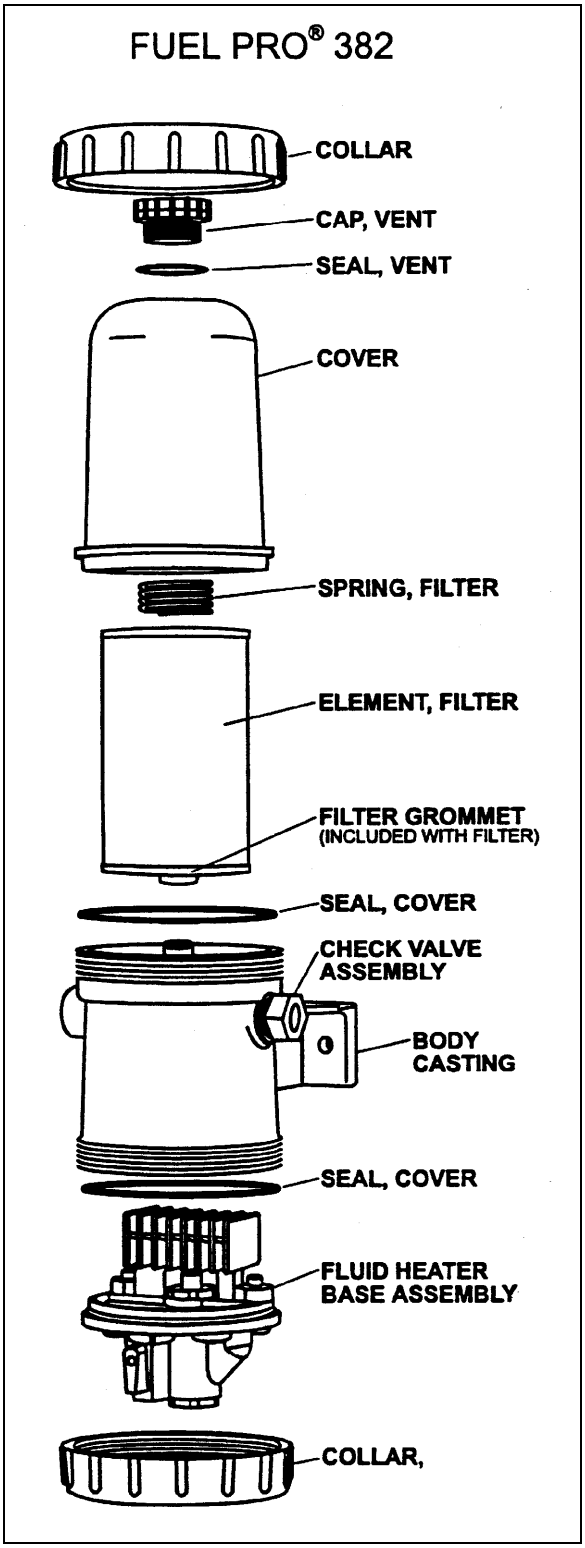

FIGURE 5: DAVCO FUEL PRO 382 EXPLODED VIEW03034

5. FUEL TANK

All XL2 series vehicles are equipped with a high-density cross-link polyethylene fuel tank. XL2-45 coach has a capacity of 208 US gallons (787 liters). MTH 40 and MTH 45E fuel tanks have a total capacity of 250 US gallons (945 liters) while MTH 45 can be equipped with an optional 90 US gallons (341 Liters) auxiliary stainless steel tank forward of the standard 208 US gallons (787 liters) fuel tank. The main tank is located just forward of the rear baggage compartment, between the A/C condenser and evaporator. The auxiliary tank is located in the baggage compartment just forward of the main tank.

On all vehicles, fuel filling access doors on both sides of vehicle provide direct access to filler necks; offering the added advantage of refueling from either side of vehicle.

A pressure relief valve on the fuel tank connection-panel relieves high-pressure buildup and an overflow tube allows offset air in the tank to escape during filling. For 95% of the tank volume, 5% of tank inside space is kept filled with air with no exit opening, allowing for a fuel expansion safety margin. A drain plug, accessible from under the vehicle, is fitted at the bottom of the tank(s).

5.1 TANK REMOVAL

⚠ WARNING ⚠

Park vehicle safely, apply parking brake, stop engine and set battery master switch(es) to the OFF position prior to working on the vehicle.

Before working under an air-suspended vehicle, it is strongly recommended to support the body at the recommended jacking points.

NOTE

Before removal, the fuel tank should be completely drained by unscrewing the drain plug. Ensure that the container used has a capacity equal to the amount of fuel remaining in the tank(s).

For vehicles equipped with a transverse tank or an auxiliary tank, drain it as well since it is directly connected to the main tank.

NOTE
It is possible to drain both tanks through only one plug, but the other tank will not drain completely since the connecting hose is not on the bottom.

5.1.1 Main Fuel Tank

1. Open the condenser door and remove the fuel tank access panel. The rear baggage compartment fuel tank access panel may also be removed to facilitate access to components.
2. If applicable, unscrew clamps retaining L.H. side filler tube to the fuel tank, then disconnect tube and remove it.
3. Unscrew clamps retaining R.H. side filler tube to fuel tank and filler neck. Disconnect tube and remove it.
4. If applicable, unscrew preheater supply line, preheater return line, auxiliary return line and/or auxiliary return line from fuel tank connection-panel.
5. Unscrew engine supply and return lines from fuel tank connection-panel, identify them for reinstallation.

NOTE
For vehicles equipped with a transverse tank or an auxiliary tank, the two hoses joining the tanks should be disconnected.

6. Disconnect electrical wiring from tank on connection plate.

⚠ WARNING ⚠
Before removing the bolts securing the tank support to the frame, make sure the tank is supported adequately. Failure to do so could result in injury as well as damage to the tank.

7. From under the vehicle, on R.H. side, unscrew the 4 bolts (2 in front, 2 in back) retaining the tank support to the frame.
8. From under the vehicle, on the L.H. side, unscrew the 2 bolts (1 in front, 1 in back) retaining the tank support to the frame.
9. Carefully remove tank from under the vehicle.

5.1.2 Auxiliary Fuel Tank (if so equipped)

1. Open the baggage compartment just forward of condenser compartment, disconnect the (2) hoses previously joining the tanks.
2. From underneath vehicle, unscrew the two (2) bolts retaining the tank strap (one on each side).
3. From inside the baggage compartment just forward of condenser compartment, slightly raise the strap and pull out auxiliary fuel tank using the same care as for the main fuel tank.

⚠ CAUTION ⚠
Protective cushions or rags should be placed on the baggage compartment floor to prevent it from being scratched by the fuel tank during removal.

5.1.3 Transverse Fuel Tank

1. The transverse fuel tank must be removed from R.H. side. The stainless steel panel must be removed by first removing the adhesive.
2. From underneath the vehicle, unscrew the bolt on left and right hand side securing the tank foot. Unscrew the two screws at the center of the tank then disconnect the two hoses previously joining the tanks.
3. Unscrew clamps retaining L.H. side filler tube to the fuel tank, then disconnect tube and remove it.
4. Unscrew clamps retaining R.H. side filler tube to fuel tank and filler neck. Disconnect tube and remove it.
5. Remove plastic molded panel from inside baggage compartment located forward of A/C & Heating compartment.
6. Slide the tank out carefully.

5.2 TANK INSTALLATION

To install Main, Auxiliary and Transverse Fuel Tanks, simply reverse the *"Tank Removal"* procedure.

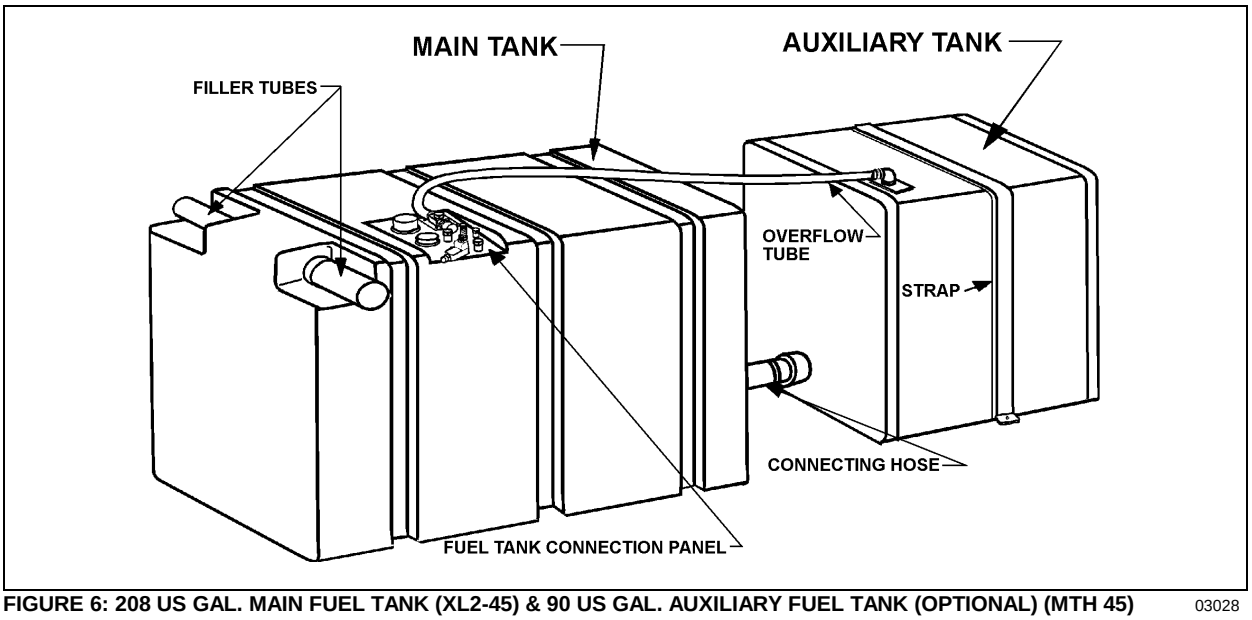

FIGURE 6: 208 US GAL. MAIN FUEL TANK (XL2-45) & 90 US GAL. AUXILIARY FUEL TANK (OPTIONAL) (MTH 45) 03028

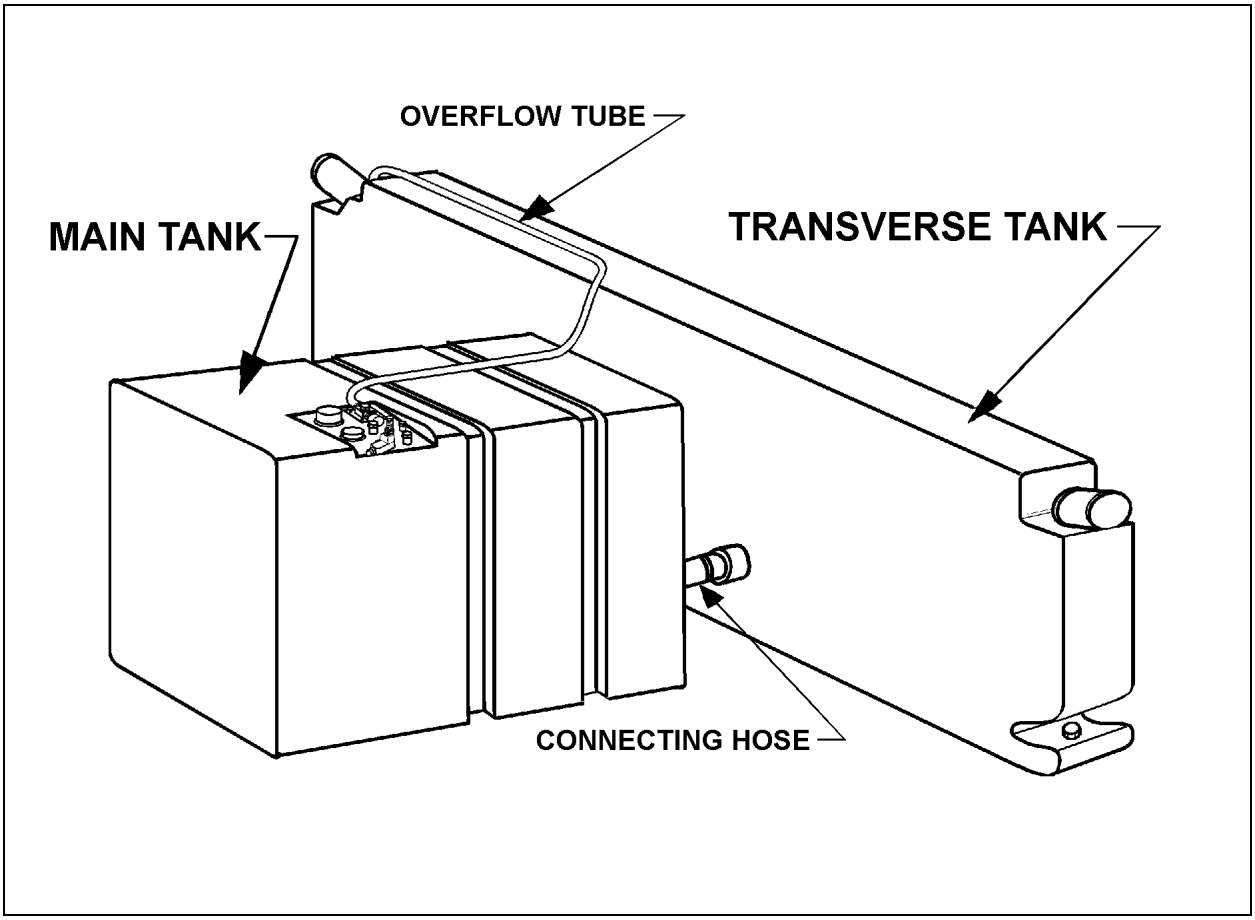

FIGURE 7: 250 US GALLONS FUEL TANKS (MAIN TANK & TRANSVERSE FUEL TANK) (MTH 40 & MTH 45E) 03029

5.3 FUEL TANK VERIFICATION

Inspect fuel tank from under vehicle for leaks or fuel traces. If a leak is detected, repair immediately as per "Polyethylene Fuel Tank Repair" in this section.

⚠ WARNING ⚠

Park vehicle safely, apply parking brake, stop engine and set battery master switch(es) to the OFF position prior to working on the vehicle.

Before working under an air-suspended vehicle, it is strongly recommended to support the body at the recommended jacking points.

5.4 POLYETHYLENE FUEL TANK REPAIR

NOTE

Fuel level must be lower than perforation to carry out this procedure.

⚠ WARNING ⚠

Park vehicle safely, apply parking brake, stop engine and set battery master switch(es) to the OFF position prior to working on the vehicle.

1. Locate perforation on fuel tank.
2. If necessary, remove fuel tank as per instructions in this section.
3. Drill perforation with a 23/64" bit. Make sure drill hole is perfectly round.
4. Insert a screw (Prevost #500196) and a washer (Prévost #5001244) into anchor nut (Prévost #500331).
5. Place assembly in drill hole. Tighten screw by 10 complete turns. Refer to Fig. 8.
6. Apply sealant on head plug (Prévost #507300) and seal hole with the head plug.

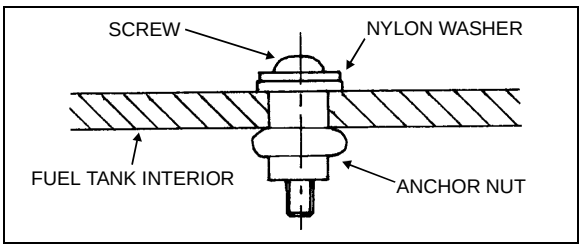

FIGURE 8: FUEL TANK REPAIR 03014

6. PRIMING FUEL SYSTEM

The problem with restarting a diesel engine that has run out of fuel, is that after the fuel is exhausted from the tank, it is pumped from the primary fuel filter or the fuel filter/water separator (if vehicle is so equipped), and sometimes partially removed from the secondary filter. This results in an insufficient fuel supply to sustain engine firing. The primary fuel filter or fuel filter/water separator and secondary filter must be free of air in order for the systems to provide adequate fuel for the injectors. When the engine runs out of fuel, the following operations must be performed before restarting:

Fill fuel tank with the recommended fuel oil. If only partial filling is possible, add a minimum of 10 gallons (38 liters) of fuel.

* If the vehicle is equipped with a Fuel Pro 382 fuel filter/water separation, pour fuel through spin on cap as per "4.3 DAVCO FUEL PRO 382".
* If the vehicle is equipped with an optional priming pump **(**see Figure 9).

Press the priming switch, located in the engine compartment rear junction box just below the switches and cables. Start the engine and check for leaks.

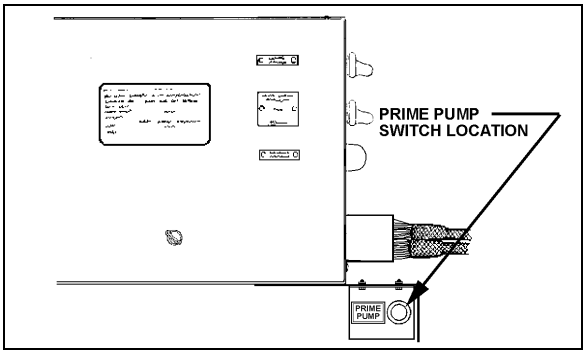

FIGURE 9: PRIME PUMP SWITCH LOCATION 01037

If the vehicle is not equipped with a priming pump:

1. Unscrew the cap on the priming valve located on the secondary filter;
2. Direct fuel under pressure 25 psi (172 kPa) to the priming valve using a quick coupling;
3. Start the engine and check for leaks.

7. FUEL PUMP INSTALLATION

The fuel pump is driven off the rear of the air compressor.

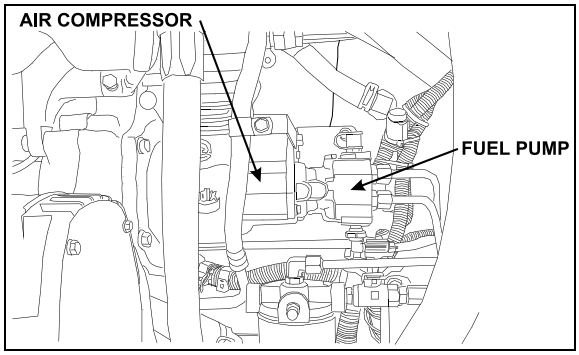

FIGURE 10: FUEL PUMP LOCATION 03053

1. If removed, install inlet and outlet fittings in the cover of the fuel pump.

NOTE
New fittings have sealant already applied. When reusing fittings, coat the threads lightly with Locktite Pipe Sealant, Detroit Diesel number J 26558-92, or equivalent, before installing. To prevent sealant from entering fuel system, do not apply to the first two threads of the fitting. Do not use Teflon tape or paste on the fittings.

2. Install drive coupling in drive hub of the fuel pump. Install a new gasket to the mounting flange of the pump.
3. Index the drive coupling with the drive hub on the end of the air compressor crankshaft and align the pump mounting bolt holes with those in the air-compressor rear cover.

NOTE
When correctly positioned, the outlet fitting on the pump should be in approximately an 8 o'clock position when viewed from the rear, and the drain opening in the pump body facing down.

4. Seat the fuel pump squarely against the air compressor. Pilot the flange on the pump body, in the opening in the rear cover of the compressor. Install three mounting bolts and tighten them to 22-28 Lbf-ft (30-38 Nm).
5. Connect the fuel inlet and outlet lines to the fuel pump and tighten.
6. Prime engine fuel system before starting engine to ensure pump seal lubrication and prompt engine starting.

8. FUEL OIL SPECIFICATIONS

The quality of fuel oil used for high-speed diesel engine operation is a very important factor in obtaining satisfactory engine performance, long engine life and acceptable exhaust emission levels. The fuel oil should meet ASTM designation D 975. Grade 1-D is recommended, however grade 2-D is acceptable.

NOTE
These fuel grades are very similar to grade DF-1 or DF-2 of Federal Specifications VV-F-800. For detailed fuel recommendations, refer to publication "Engine Requirements-Lubricating Oil, Fuel, and Filters" #7SE270 available from Detroit Diesel Distributors.

9. AIR CLEANER (DRY TYPE)

The vehicle is equipped with a dry-type replaceable element air cleaner, located in the engine compartment. Access the air cleaner through the engine R.H. side door. Engine air enters the air cleaner through (2) two intake ducts located just above engine side doors. It then flows through a pre-cleaner and finally through the air cleaner. The pre-cleaner removes dust and moisture by means of a discharge tube at the bottom of the element. It is in series with a replaceable impregnated paper filter element (air cleaner).

9.1 PRE-CLEANER SERVICING

The pre-cleaner is designed to be self-cleaning; however, it should be inspected and any accumulated foreign material removed during the periodic replacement of the impregnated paper filter element.

9.2 AIR CLEANER SERVICING

Stop the engine, open the R.H. side engine compartment door, and loosen the wing nut retaining the air cleaner element to the air cleaner. Remove the element by pulling on the handle in the center of the air cleaner element.

Install cleaner element as follows:

1. Inspect the gasket-sealing surface inside the air cleaner. It must be smooth, flat and clean;
2. Install the air cleaner element;
3. Make sure that the element seals securely;
4. Inspect element cover gasket and replace if necessary.

Whenever it becomes necessary to remove the air cleaner assembly (dry type) for maintenance or other repair in this area, great care should be taken when installing air cleaner assembly.

The pre-filter should be installed snugly in the air duct and clamped tightly to the air cleaner inlet to prevent any dust infiltration into the air cleaner.

9.3 GENERAL RECOMMENDATIONS

The following maintenance procedures will ensure efficient air cleaner operation:

1. Keep the air cleaner housing tight on the air intake pipe;
2. Make sure the correct filters are used for replacement;
3. Keep the air cleaner properly assembled so the joints are air-tight;
4. Immediately repair any damage to the air cleaner or related parts;
5. Inspect, clean or replace the air cleaner or elements as operating conditions warrant. Whenever an element has been removed from the air cleaner housing the inside surface of the housing must be cleaned with a soft clean cloth;
6. Periodically inspect the entire system. Dust-laden air can pass through an almost invisible crack or opening which may eventually cause damage to an engine;
7. Never operate the engine without an element in the air cleaner assembly;

⚠ CAUTION ⚠

Do not ignore the Warning given by the air restriction indicator. This could result in serious engine damage.

8. Store new elements in a closed area free from dust and possible damage.

9.4 AIR CLEANER RESTRICTION INDICATOR

A resettable restriction indicator may be installed on the engine air-intake duct, clearly visible from the rear engine compartment. The indicator monitors the vacuum level between the air filter and the engine. A red marker is displayed when the air filter is clogged and must be replaced. Reset by pressing on the indicator's extremity.

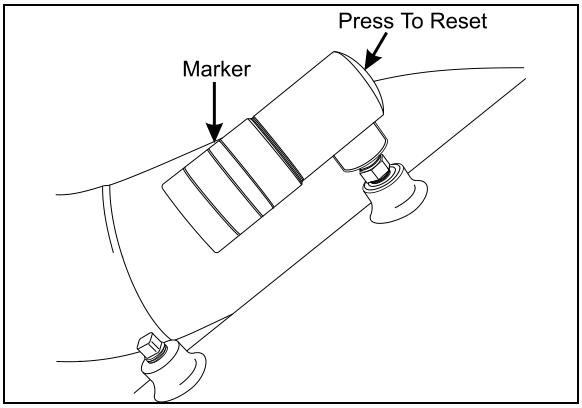

FIGURE 11: RESTRICTION INDICATOR 01052

10. FUEL COOLER

The fuel cooler serves to cool the surplus diesel fuel after it has exited the cylinder head, on its way back to the fuel tank. It is accessible through the engine radiator door, and it is located just in front of the coolant radiator (Fig. 13).

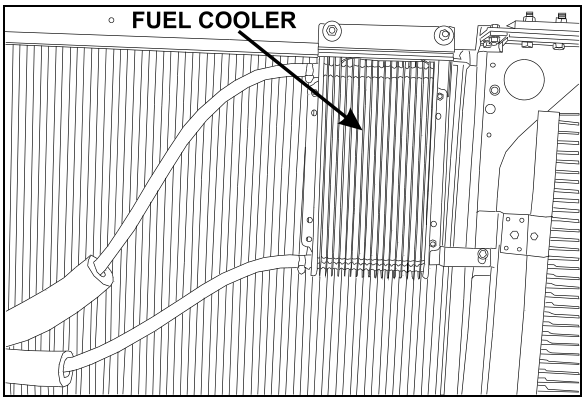

FIGURE 12: FUEL COOLER LOCATION 03054

11. FUEL PEDAL

The EFPA (Electronic Foot Pedal Assembly) connects the accelerator pedal to a potentiometer (a device that sends an electrical signal to the ECM, which varies in voltage, depending on how far down the pedal is depressed). The EFPA is installed in the space normally occupied by a mechanical foot pedal. It has maximum and minimum stops that are built into the unit during manufacturing.

11.1 FUEL PEDAL ADJUSTMENT

The EFPA contains a throttle position sensor that varies the electrical signal sent to the ECM. The sensor must be adjusted whenever an

EFPA is serviced. In addition, the sensor should be adjusted any time codes 21 and 22 are flashed.
With the ignition "ON" and the proper diagnostic tool (DDR) (for information regarding the DDR, see *"01 ENGINE"* in this manual), check the throttle counts at idle and full throttle positions.
Proper pedal output should be 20/30 counts at idle and 200/235 at full throttle. If adjustment is necessary, remove the potentiometer retaining screws and rotate the potentiometer clockwise to increase counts or counterclockwise to decrease. When correct output is confirmed, tighten retaining screws.

11.2 POTENTIOMETER REPLACEMENT

1. Disconnect cable harness connector.

⚠ CAUTION ⚠

Note the routing and clamping locations of the cable before disassembly. Proper cable routing and fastening is critical to the operation of this system. Marking the foot pedal assembly to record cable routing is recommended.

2. Loosen the two screws and remove potentiometer. Retain for re-assembly.
3. Discard potentiometer (Fig. 13).
4. Position new potentiometer. Press potentiometer onto the potentiometer shaft, matching cutouts in shaft to drive tangs of potentiometer. Apply hand pressure until potentiometer has bottomed out in housing. Reinstall screws (Fig. 13) and tighten just enough to secure potentiometer lightly. Tighten screws to 10 - 20 Lbf-in (1.5 - .2 Nm).
5. Reconnect electronic foot pedal assembly's cable harness to the ECM connector. If potentiometer calibration is necessary (see *"FUEL PEDAL ADJUSTMENT"* in this section).

⚠ CAUTION ⚠

Make sure the cable harness is routed correctly, and securely installed so that it does not become pinched, stretched, or otherwise damaged during vehicle operation.

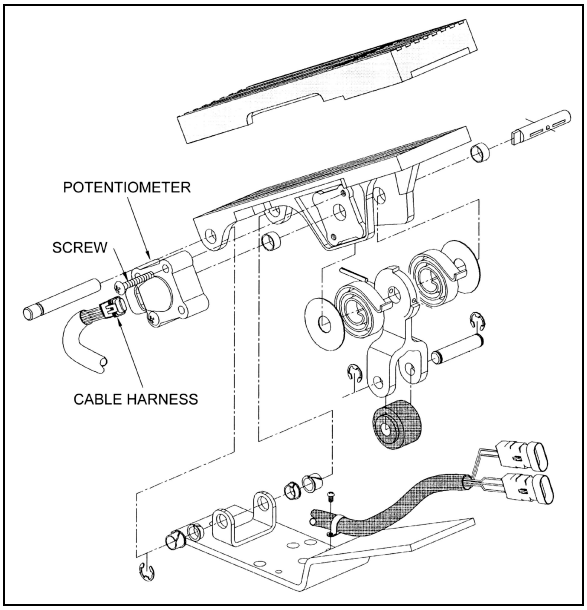

FIGURE 13: ELECTRONIC FOOT PEDAL ASSEMBLY 03035

12. SPECIFICATIONS

Davco FuelPro 382 Fuel Filter / Water Separator Element

Supplier number 23521528
Prévost number 531437

Primary Fuel Filter / Water Separator (optional)

(May be used instead of primary filter (never use with a primary filter).
Make ..... Racor
Type ..... Spin-on

ELEMENT
Supplier number ..... S 3202
Prévost number 531390

BOWL
Supplier number RK30051
Prévost number 531389

DRAIN VALVE AND SEAL
Supplier number RK30058
Prévost number 531397

O-RING
Supplier number RK30076
Prévost number 531398

PROBE/WATER SENSOR
Supplier number RK21069
Prévost number 531391

Primary Fuel Filter

Make ..... AC
Type ..... Spin-on
Filter No. T-915D
Service Part No 25014274
Prévost number 510137
OR
Service Part No (Type with Water Separator) 23512317
Prévost number 531407
Element torque ..... 1/2 turn after gasket contact

Secondary Fuel Filter

Make ..... AC
Type ..... Spin-on
Filter No. T-916D
Service Part No 25014342
Prévost number 510128
Element torque ..... 1/2 turn after gasket contact

Fuel tank(s) Capacity (ies)

Standard (XL2-45 & MTH 45) ..... 208 US gallons (787 liters)
Standard (MTH 40 & MTH 45E) ..... 250 US gallons (945 liters)
Optional (MTH 45) ..... 90 US gallons (341 liters)

Air Cleaner

Make ..... Nelson
Prevost Number 530206
Service Part No 7182 8N
Supplier number (element cartridge) 70337N
Prévost number (element cartridge) 530197

Air Cleaner Restriction Indicator

Make ..... Donaldson
Model RBX00-2220
Indicates ..... at 20" (508 mm) of water
Prévost number 530161

Preheater Fuel Filter

Make ..... Webasto
Supplier number 603.359
Prévost number 871037

Fuel Cooler

Make ..... Berendsen
Supplier number DB-1240
Prévost number 950109

SECTION 04: EXHAUST SYSTEM

CONTENTS

1. DESCRIPTION 04-2

2. MAINTENANCE 04-2

3. MUFFLER REMOVAL & INSTALLATION 04-4

4. FLEXIBLE TUBE INSTALLATION 04-4

5. HEAT BLANKETS (CONVERTED VEHICLES ONLY) 04-4

5.1 EXHAUST 04-4
5.1.1 Installation on XL2-45 Shells 04-4
5.1.2 Installation on XL2-40 & XL2-45E Shells 04-5
5.2 TURBO (ALL SHELLS) 04-5

ILLUSTRATIONS

FIGURE 1: EXHAUST SYSTEM - XL2-40 & 45E (SHELL) INSTALLATION 04-2
FIGURE 2: EXHAUST SYSTEM - XL2-45 (COACH & SHELL) INSTALLATION 04-3
FIGURE 3: FLEXIBLE TUBE INSTALLATION 04-4
FIGURE 4: EXHAUST BLANKET INSTALLATION 04-4
FIGURE 5: TURBO BLANKET INSTALLATION 04-5

1. DESCRIPTION

The muffler is rubber mounted on the vehicle frame. This feature reduces the transmission of vibrations to the muffler thus resulting in extended life of muffler, brackets and other components.

2. MAINTENANCE

The exhaust system should be inspected periodically for restrictions and leaks. The exhaust systems are shown on figures 1 & 2 (fig. 1 = XL2-40 & 45E and fig. 2 = XL2-45). Restrictions such as kinked or crimped pipes result in excessive back pressure that can lead to increased fuel consumption, power loss, and possible damage to engine combustion chamber components. Exhaust leaks are commonly the result of loose clamp bolts, corroded pipes, or a punctured muffler. In addition to objectionable noise, a leaking exhaust system could allow toxic gases to enter the vehicle. Inspect the exhaust system as follows:

* At vehicle inspection intervals ;
* Whenever a change is noticed in the sound of the exhaust system ; and
* Whenever the exhaust system is damaged.

Replace damaged or corroded exhaust system components without delay.

When operating the engine in a service garage or in a closed area, the exhaust must be vented to the outside. Place the shop vent hose over the exhaust outlet pipe.

⚠ WARNING ⚠

Avoid breathing exhaust gases since they contain carbon monoxide which is odorless and colorless but harmful. Carbon monoxide is a dangerous gas that can cause unconsciousness and can be lethal. If, at any time you suspect that exhaust fumes are entering the vehicle, locate and correct the cause(s) as soon as possible.

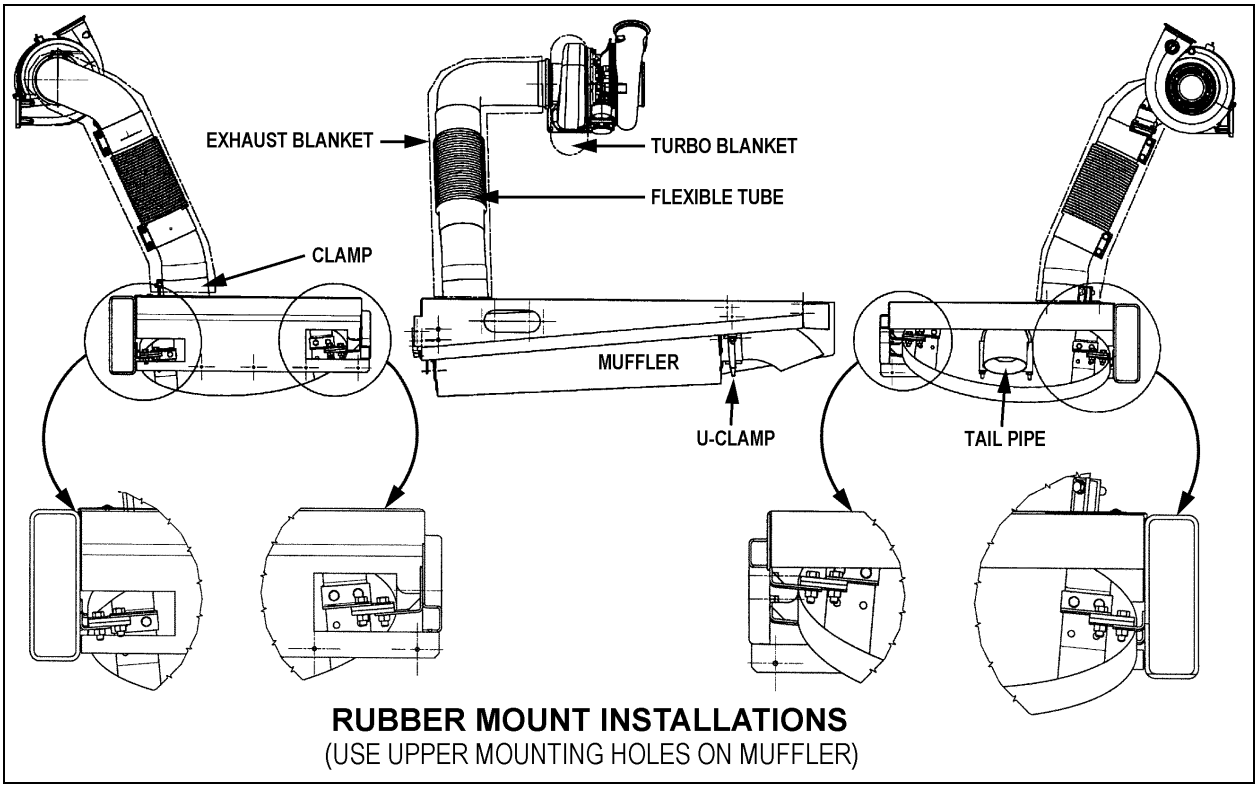

FIGURE 1: EXHAUST SYSTEM - XL2-40 & 45E (SHELL) INSTALLATION 04006

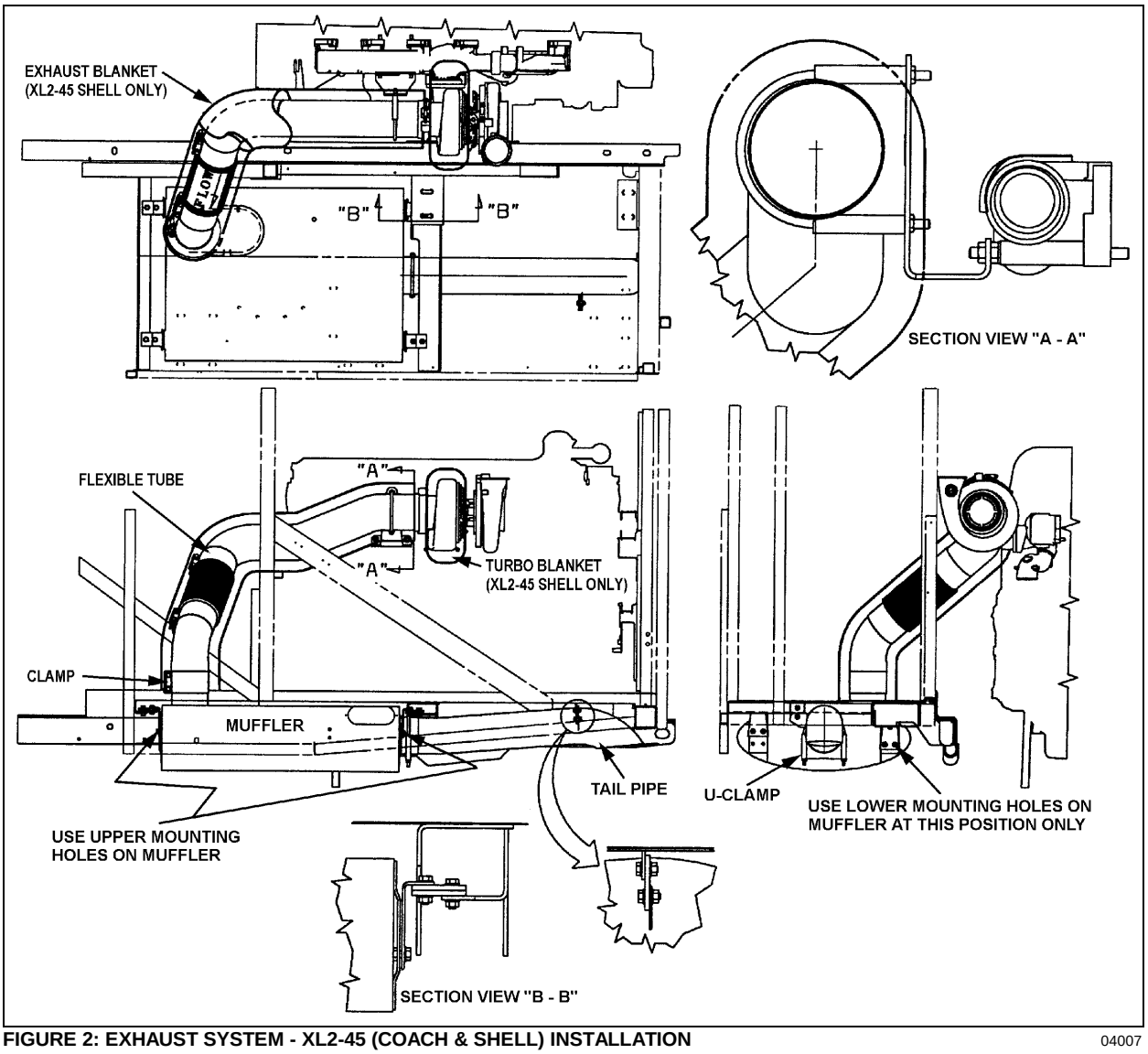

FIGURE 2: EXHAUST SYSTEM - XL2-45 (COACH & SHELL) INSTALLATION 04007

3. MUFFLER REMOVAL & INSTALLATION

⚠ WARNING ⚠

Make sure that muffler and components are cold before handling.

1. Remove bolts and clamps securing exhaust pipe bellows to the muffler.
2. Support the muffler from underneath vehicle.
3. Remove U-clamp retaining the tail pipe to the muffler.
4. Remove bolt holding the tail pipe to the frame bracket.
5. Remove the tail pipe.
6. Remove the fasteners holding the four rubber mounts to the frame brackets.
7. Remove the fasteners securing the rubber mounts to the muffler brackets.
8. Remove rubber mounts then muffler from underneath vehicle.
9. Remove parts which are attached to the muffler such as brackets and collar.
10. Inspect and replace parts if necessary. Reinstall parts on the new muffler.

For installation, reverse the removal procedure.

⚠ WARNING ⚠

Check connections for tightness and fasteners for proper assembly.

4. FLEXIBLE TUBE INSTALLATION

The flexible exhaust tube contains an inside rigid pipe. To allow appropriate flexibility for assembly, make sure that the rigid pipe is concentric to the flexible part.

To maintain the pipe centered at the time of installation, cardboard spacers must be inserted at four places at equal distance around tubing (Fig. 3). These spacers may be left in place and will deteriorate over time.

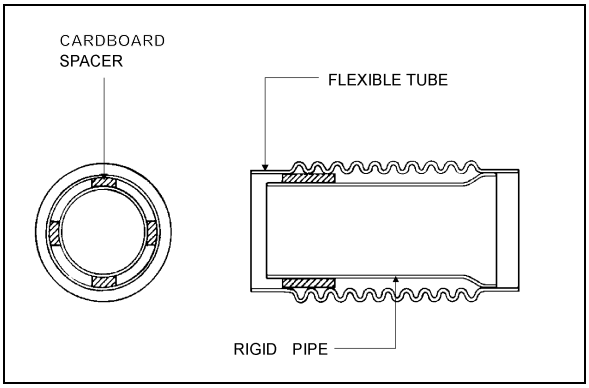

FIGURE 3: FLEXIBLE TUBE INSTALLATION 04003

5. HEAT BLANKETS (CONVERTED VEHICLES ONLY)

5.1 EXHAUST

5.1.1 Installation on XL2-45 Shells

1. Remove L.H. side tag axle wheel.
2. Locate splash guard panel located at rear of vehicle (behind L.H. side tag axle wheel), then remove, cover bellows and exhaust pipe with 2-piece blanket #040553 (Fig. 4). Use velcro to secure blanket in place.

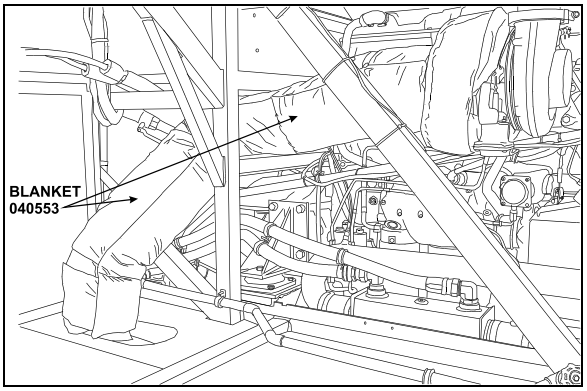

FIGURE 4: EXHAUST BLANKET INSTALLATION 04009

3. Install the turbo blanket as described further in this section.

5.1.2 Installation on XL2-40 & XL2-45E Shells

1. Remove L.H. side tag axle wheel.
2. Locate splash guard panel located at rear of vehicle (behind L.H. side tag axle wheel), then remove, cover bellows and exhaust pipe with 2-piece blanket #040565. Refer to figure 4 showing installation on XL2-45 shells. Use velcro to secure blanket in place.
3. Install the turbo blanket as described further in this section.

5.2 TURBO (ALL SHELLS)

Install turbo blanket #040557, then cover turbine housing (Fig. 5). Use velcro to secure blanket in place.

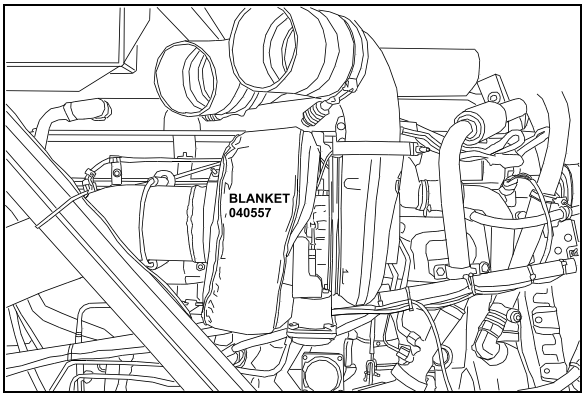

FIGURE 5: TURBO BLANKET INSTALLATION 04010

NOTE
The compressor housing does not require a blanket.

SECTION 05: COOLING SYSTEM

CONTENTS

1. DESCRIPTION 05-3

2. MAINTENANCE 05-4

2.1 VEHICLES WITHOUT COOLANT FILTERS 05-4
2.2 VEHICLES WITH COOLANT FILTERS 05-4

3. HOSES 05-5

3.1 CONSTANT-TORQUE HOSE CLAMPS 05-5
3.1.1 Installation 05-5
3.1.2 Maintenance 05-5

4. COOLANT 05-6

4.1 COOLANT LEVEL VERIFICATION 05-6
4.2 COOLANT LEVEL SENSOR 05-6
4.3 THAWING COOLING SYSTEM 05-6
4.4 COOLANT REQUIREMENTS 05-6
4.5 COOLING SYSTEM RECOMMENDATIONS 05-6
4.6 INHIBITORS 05-7
4.6.1 Inhibitor Test Procedures 05-7
4.7 COOLANT RECOMMENDATIONS 05-7
4.7.1 Coolant Not Recommended 05-8
4.7.2 Additives Not Recommended 05-8
4.7.3 Vehicles Without Coolant Filters 05-8
4.7.4 Vehicles With Coolant Filters 05-8

5. DRAINING COOLING SYSTEM 05-8

6. FILLING COOLING SYSTEM 05-9

7. FLUSHING 05-10

7.1 COOLING SYSTEM DESCALERS 05-10
7.2 REVERSE FLUSHING 05-10

8. SPIN-ON COOLANT FILTER 05-11

9. RADIATOR 05-12

9.1 MAINTENANCE 05-12

10. VARIABLE SPEED RADIATOR FAN 05-12

10.1 MAINTENANCE 05-12
10.2 INSPECTION 05-13
10.3 THERMOSTAT OPERATION 05-13

11. FAN GEARBOX 05-13

11.1 MAINTENANCE 05-14
11.2 OIL CHANGE 05-14

12. RADIATOR FAN BELT REPLACEMENT 05-14

12.1 BELT TENSION ADJUSTMENT 05-14

13. FAN DRIVE ALIGNMENT 05-15

14. SPECIFICATIONS 05-17

ILLUSTRATIONS

FIGURE 1: COOLING SYSTEM 05-3
FIGURE 2: SURGE TANK - ENGINE COMP'T 05-4
FIGURE 3: CONSTANT-TORQUE CLAMP 05-5
FIGURE 4: SURGE TANK SIGHT GLASS 05-6
FIGURE 5: ENGINE COMPARTMENT 05-8
FIGURE 6: HEATER LINE SHUT-OFF VALVES 05-8
FIGURE 7: COACHES SHUT-OFF VALVES (TYP.) 05-9
FIGURE 8: ENGINE COOLANT DRAIN COCKS 05-9
FIGURE 9: WATER PUMP DRAIN PLUG 05-9
FIGURE 10: COOLANT FILTER 05-11
FIGURE 11: MECHANICAL LOCKING DEVICE 05-12
FIGURE 12: SCREWS LOCATION 05-12
FIGURE 13: THERMOSTAT AND RELATED PARTS 05-13
FIGURE 14: FAN GEARBOX 05-14
FIGURE 15: REGULATOR VALVE 05-14
FIGURE 16: BELT TENSIONER 05-15
FIGURE 17: ANGLE SUPPORT 05-15
FIGURE 18: PULLEY ALIGNMENT 05-15
FIGURE 19: PULLEY VERTICAL ANGLE 05-16

1. DESCRIPTION

A radiator and thermo-modulated fan are used to effectively dissipate the heat generated by the engine. A centrifugal-type water pump is used to circulate the engine coolant (Fig. 1).

Two full blocking-type thermostats are used in the water outlet passage to control the flow of coolant, providing fast engine warm-up and regulating coolant temperature.

The engine coolant is drawn from the lower portion of the radiator by the water pump and is forced through the transmission cooler before going through the oil cooler and into the cylinder block.

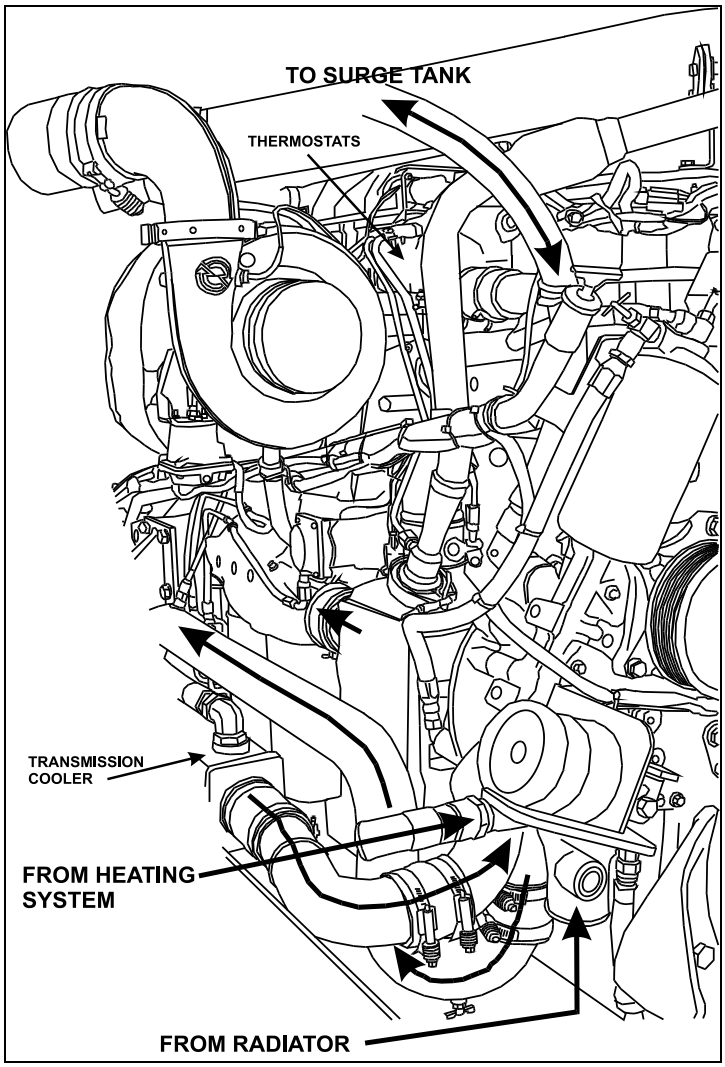

FIGURE 1: COOLING SYSTEM 05087

From the cylinder block, the coolant passes up through the cylinder head and, when the engine is at normal operating temperature, it goes through the thermostat housing and into the upper portion of the radiator. The coolant then passes through a series of tubes where its heat is dissipated by air streams created by the revolving fan and the motion of the vehicle.

Upon starting a cold engine or when the coolant is below normal operating temperature, the closed thermostats direct coolant flow from the thermostat housing through the by-pass tube to the water pump. Coolant is recirculated through the engine to aid engine warm up. When the thermostat opening temperature is reached, coolant flow is divided between the radiator inlet and the by-pass tube. When the thermostats are completely open, all of the coolant flow is to the radiator inlet.

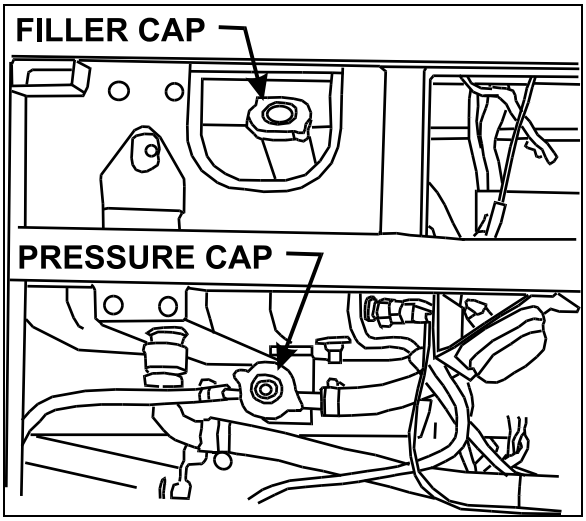

FIGURE 2: SURGE TANK - ENGINE COMP'T 05079

The cooling system is filled through a filler cap on the surge tank (Fig. 2). A pressure cap underneath the surge tank is used to maintain pressure within the system. When system exceeds normal pressure rating (14 psi - 96.53 kPa), the cap releases air and if necessary, coolant through the overflow tube (Fig. 2). Two thermostats are located in the housing attached to the right side of the cylinder head (Fig. 1). Furthermore, a water temperature sensor mounted on the cylinder head (radiator side) is also supplied for engine protection purposes.

The engine cooling system also provides hot coolant fluid for the vehicle heating system. Refer to section 22, *""HEATING AND AIR CONDITIONING"* in this manual for information relating to heating system water circulation.

2. MAINTENANCE

A systematic routine inspection of cooling system components is essential to ensure maximum engine and heating system efficiency.

- Check coolant level in the surge tank daily, and correct if required. Test antifreeze strength.
- Maintain the prescribed inhibitor strength levels as required. Coolant and inhibitor concentration must be checked at each oil change, every 12,500 miles (20 000 km) or once a year, whichever comes first to ensure inhibitor strength. For vehicles equipped with coolant filters replace precharge element filter with a maintenance element filter as per *"COOLANT FILTER"* in this section. If the vehicle is not equipped with a filter, add the recommended inhibitor concentration to the antifreeze/water solution.
- Drain, flush, thoroughly clean and refill the system every two years or every 200,000 miles (320 000 km), whichever comes first. For vehicle equipped with coolant filters, change the precharge element filter or the existing maintenance element filter for a new maintenance element filter. If the vehicle is not equipped with filters add the recommended inhibitor concentration to the antifreeze/water solution.

NOTE
Do not add inhibitors to the antifreeze / water solution if vehicle is equipped with a coolant filter.

Coolant must be discarded in an environmentally safe manner.

2.1 VEHICLES WITHOUT COOLANT FILTERS

Refer to Nalcool 3000 with Stabil-Aid bulletin annexed to the end of this section for preventive maintenance (at each oil change) and initial treatment instructions (each time the cooling system is drained and flushed).

2.2 VEHICLES WITH COOLANT FILTERS

Change the coolant precharge element filter for a maintenance element filter at initial oil change (see *"Specifications"* at the end of this section) and replace existing maintenance element filter with a new one as per *"COOLANT FILTER"* in this section. A precharge element filter must be installed each time the cooling system is drained and flushed prior to installing a maintenance element filter.

- Check belts for proper tension; adjust as necessary and replace any frayed or badly worn belts.
- Check radiator cores for leaks and make sure the cores are not clogged with dirt or insects. To avoid damaging the fins, clean cores with a low-pressure air hose. Steam clean if required.
- Inspect the water pump operation. A leaky pump sucks in air, increasing corrosion.
- Repair all leaks promptly. Unrepaired leaks can lead to trouble. Inspect and tighten radiator mounts periodically. Test and replace thermostats regularly.

NOTE

In order to ensure the integrity of the system, it is recommended that a periodic cooling system pressure check be made. Pressurize the cooling system to 103-138 kPa (15-20 psi) using Radiator and Cooling System Tester, J24460-1. Do not exceed 138 kPa (20 psi).

Any measurable drop in pressure may indicate a leak. Whenever the oil pan is removed, the cooling system should be pressure checked as a means of identifying any incipient coolant leaks. Make sure the cause of the internal leak has been corrected before flushing the contaminated system.

Leaks at the thermostat housing hose connections may be caused by deformation of connections or by rough surfaces on the castings of the hose mounting surfaces. It is recommended that *"Dow Corning RTV-102 Compound"* or any equivalent product be applied on cast surfaces prior to hose installation.

⚠ CAUTION ⚠

Castings should be clean and free of oil and grease before applying compound. No other sealer should be used with RTV-102 compound.

3. HOSES

Rotten, swollen, and worn out hoses or loose connections are frequent causes of cooling system problems.

Serious overheating is often caused by an old hose collapsing or from rotten rubber shedding from hoses and clogging the coolant passages.

Connections should be inspected periodically and hose clamps tightened. Replace any hose found to be cracked or swollen.

When installing a new hose, clean pipe connections and apply a thin layer of a non-hardening sealing compound. Replace worn out clamps or clamps that pinch hoses.

3.1 CONSTANT-TORQUE HOSE CLAMPS

All hose clamps of 1 3/8" ID and over, used on the heating and cooling systems, are of the *"Constant-torque"* type. These clamps are worm-driven, made of stainless steel, and supplied with a series of Belleville spring washers. They also feature an extended integral liner that covers the band slots to protect soft/silicone hoses from damage, and help maintain consistent sealing pressure.

This type of clamp is designed to automatically adjust its diameter to compensate for the normal expansion/contraction of a hose and metal connection that occurs during vehicle operation and shutdown. The constant-torque clamp virtually eliminates coolant losses due to *"Cold flow"* leakage and greatly minimizes clamp maintenance.

3.1.1 Installation

A torque wrench should be used for proper installation. The recommended torque is 90 to 100 lbf-in. (10 to 11 Nm). The Belleville spring washer stacks should be nearly collapsed flat and the screw tip should extend ¼" (6 mm) beyond the housing (Fig. 3).

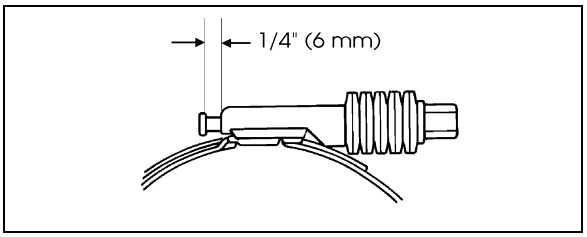

FIGURE 3: CONSTANT-TORQUE CLAMP 05037

⚠ CAUTION ⚠

The hose clamps will break if over-torqued. Do not over-tighten, especially during cold weather when hose has contracted.

3.1.2 Maintenance

The constant-torque clamps contain a *"Visual torque check" feature.* When the tip of the screw is extending ¼" (6 mm) out of the housing, the clamp is properly installed and maintains a leak-proof connection. Since the constant-torque clamp automatically adjusts to keep a consistent sealing pressure, there is no need to re-torque hose clamps on a regular basis. During vehicle operation and shutdown, the screw tip will adjust according to the temperature and pressure changes. **Checking for proper torque should be done at room temperature.**

4. COOLANT

4.1 COOLANT LEVEL VERIFICATION

Coolant level is correct when cold coolant is visible through the surge tank sight glass (Fig. 4). If coolant level is low, fill cooling system.

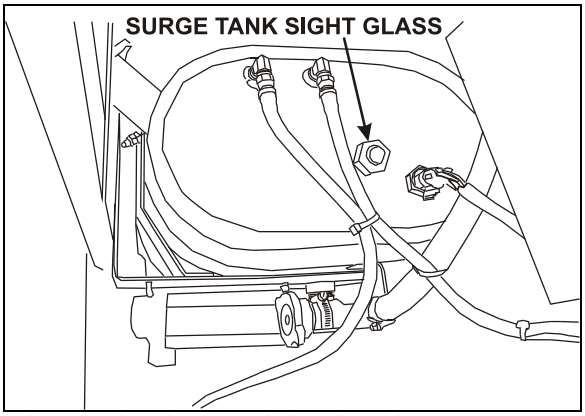

FIGURE 4: SURGE TANK SIGHT GLASS 05094

4.2 COOLANT LEVEL SENSOR

This warning device consists of a fluid level probe mounted on the surge tank. The probe sends a signal to the ECM to indicate coolant level. If the coolant level drops below the probe, the *"Check Engine"* light flashes and a diagnostic code is registered (see section 01*" ENGINE"*).

⚠ CAUTION ⚠

Do not run engine with the "Check Engine" light flashing.

The level probe is mounted on the R.H. side of the surge tank while the electronic module is mounted inside the rear electric junction box.

4.3 THAWING COOLING SYSTEM

If the cooling system becomes frozen solid, place the coach in a warm area until the ice is completely thawed. Under no circumstances should the engine be operated when the cooling system is frozen, as it will result in engine overheating due to insufficient coolant.

Once thawed, check engine, radiator and related components for damage caused by expansion of frozen coolant fluid.

4.4 COOLANT REQUIREMENTS

The coolant provides a medium for heat transfer and controls the internal temperature of the engine during operation. In an engine having proper coolant flow, some of the combustion heat is conveyed through the cylinder walls and the cylinder head into the coolant. Without adequate coolant, normal heat transfer cannot take place within the engine, and engine temperature rapidly rises. Coolant must therefore be carefully selected and properly maintained.

Select and maintain coolant in order to meet the following basic requirements:

- Provide for adequate heat transfer.
- Provide protection from cavitation damage.
- Provide a corrosion and erosion resistant environment within the cooling system.
- Prevent formation of scale or sludge deposits in the cooling system.
- Be compatible with the cooling system hose and seal materials.
- Provide adequate freeze protection during cold weather operation.

Combining suitable water with reliable inhibitors satisfies the first five requirements. When freeze protection is required, a solution of suitable water and antifreeze containing adequate inhibitors will provide a satisfactory coolant fluid. Ethylene glycol-based antifreeze is recommended for use in Series 60 engines. The cooling system capacity is 24 US gal (91 liters).

NOTE

In general, antifreeze does not contain adequate inhibitors. For this reason, supplemental coolant additives are required.

For a complete overview of engine coolants used with Detroit Diesel Engines, refer to *"Coolant Selections"* For Engine Cooling Systems Guide at the end of this section (#7se298).

4.5 COOLING SYSTEM RECOMMENDATIONS

Always maintain cooling system at the proper coolant level. Check daily.

The cooling system must be pressurized to prevent localized boiling of coolant. The system must be kept clean and leak-free. The filler and pressure caps must be checked periodically for proper operation.

Recommended phosphate free coolants: Detroit Diesel "DDC Power Cool" (P/N 23512138) or Prestone AF977 (bulk) Prevost #685125, 72702 (3.78 L), 70119 (205L), 70102 (4L).

A decal (052635) located on the surge tank provides information on recommended coolants.



4.6 INHIBITORS

A coolant solution, which has insufficient inhibitors or no inhibitors at all, invites the formation of rust, scale, sludge and mineral deposits within the cooling system. These deposits can cause water pump seal wear and coat the interior of coolant system passages. Heat transfer is reduced as deposits build up, leading to an overheating condition. Continued operation with this condition can lead to serious engine damage: liner scuffing, scoring, piston seizure and cylinder head cracking. These damages can occur quickly or over a longer period of time, depending of location and amount of deposits. Improperly inhibited coolants can become corrosive enough to "eat away" coolant passages and seal ring grooves and cause leaks to develop. Hydrostatic lock can occur if leak is internal and accumulates on top of a piston. The result may be a bent connecting rod. Cavitation erosion may occur in improperly inhibited coolants. Cavitation erosion is caused by the implosion of tiny bubbles against localized surfaces of the system. Such implosion causes pinpoint pressures high enough to erode pump impellers, cylinder liners and cylinder blocks. In extreme cases, their surfaces are so deeply pitted that they appear to be spongy, and holes can develop completely through them.

4.6.1 Inhibitor Test Procedures

Test Kits are commercially available to check engine coolant for nitrite concentration. Nitrite concentration is an indication of Supplemental Coolant Additive (SCA) level. Nitrite must be maintained within recommended levels. Coolant must be tested at each oil change to insure that inhibitor levels are maintained within the ranges shown hereafter:

NOTE
Above SCA values with Detroit Diesel #7se298 or TMC RP-329 "Type A". Use Nalco Chemical Company nitrite test kits (CO-318). A factory coolant analysis program is available through Detroit Diesel distributors under part number 23508774.

DDC Fully Formulated Glycol Coolant Limits	
-30 -– 50(°F)	Freeze Point (°F)
125 -– 500 ppm	Boron (ppm)
800 -– 3200 ppm	Nitrite (ppm)
200 -– 750 ppm	Nitrate (ppm)
50 –- 250 ppm	Silicon (ppm)
0 ppm MAX	Phosphorus (ppm)
8.0 -– 11.0	pH
40 ppm MAX	Chlorides (ppm)
100 ppm MAX	Sulfates (ppm)

4.7 COOLANT RECOMMENDATIONS

1. Always use recommended antifreeze, inhibitor and water at proper concentration levels. A 50% coolant/water solution is normally used as factory fill. Antifreeze concentration over 70% is not recommended because of poor heat transfer capability, adverse freeze protection and silicate dropout. Antifreeze concentration below 30% offers little freeze, boilover or corrosion protection.
2. Use only ethylene glycol antifreeze meeting the Detroit Diesel #7se298 or TMC RP-329 "Type A" formulation.
3. Use an antifreeze solution year-round for freeze and boil-over protection. Seasonal changing of coolant from an antifreeze solution to an inhibitor/water solution is recommended.
4. Pre-mix coolant makeup solutions at proper concentrations before adding to the cooling system.
5. Maintain the prescribed inhibitor strength levels as required.
6. Do not mix different base inhibitor packages.
7. Always maintain proper coolant level.

⚠ CAUTION ⚠
Always test the solution before adding water or antifreeze.

8. If cooling system is not at the proper protection level. Mix coolant/water solution to the proper concentration before adding to the cooling system
9. Use only non-chromate inhibitors.

10. Distilled water is recommended.

4.7.1 Coolant Not Recommended

- All antifreeze and coolant containing phosphorous;
- Automotive type coolants;
- Methoxy propanol-base antifreeze;
- Methyl alcohol-base antifreeze;
- Sealer additives or antifreezes containing sealer additives.

4.7.2 Additives Not Recommended

- Soluble Oils;
- Chromates.

⚠ WARNING ⚠

Never remove filler cap while coolant is hot. When coolant is at ambient temperature, release pressure from system by turning the pressure cap counterclockwise 1/4 turn; then remove filler cap slowly. A sudden release of pressure from the heated cooling system can result in severe burns from the expulsion of hot coolant fluid.

4.7.3 Vehicles Without Coolant Filters

Refer to Nalcool 3000 with Stabil-Aid bulletin annexed to the end of this section for preventive maintenance (at each oil change) and initial treatment instructions (each time the cooling system is drained and flushed).

4.7.4 Vehicles With Coolant Filters

Change the coolant precharge element filter for a maintenance element filter at initial oil changes (see Specifications at the end of this section) and replace existing maintenance element filter with a new one as per *"COOLANT FILTER"* in this section. A precharge element filter must be installed each time the cooling system is drained and flushed before installing a maintenance element filter.

NOTE

The coolant filter contains inhibitors.

5. DRAINING COOLING SYSTEM

Use the following procedures to drain the cooling system partially or completely.

To drain engine and related components:

1. Stop engine and allow engine to cool. Close both heater line shutoff valves.

On XL2-40, XL2-45 & 45E MTH, one valve is located in the engine compartment, under the radiator fan gearbox (Fig. 5), another valve is located in the engine compartment behind splash guard panel at rear of vehicle (behind L.H. side tag axle wheel) (Fig. 6).

NOTE

Refer to section 22 under "Preheating System" for information about preheater access and heater line shutoff valve.

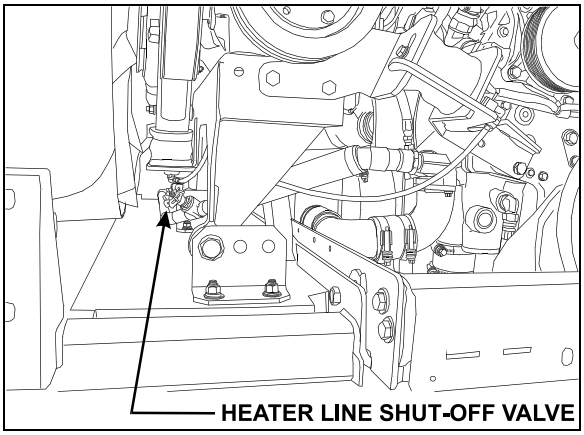

FIGURE 5: ENGINE COMPARTMENT 05078

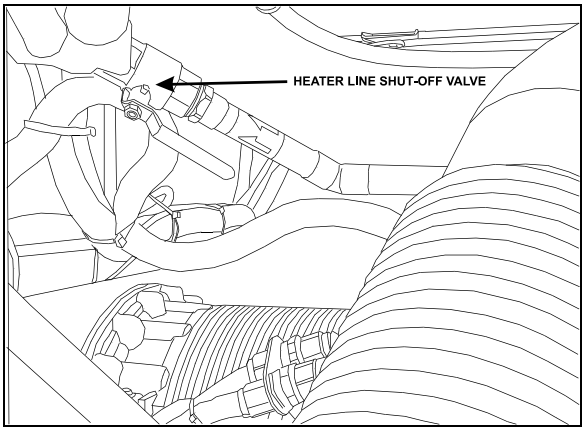

FIGURE 6: HEATER LINE SHUT-OFF VALVES 05067

On XL2-45 coaches, both valves are located in the engine compartment, behind splash guard panel at rear of vehicle (behind L.H. side tag axle wheel) (Fig. 7).

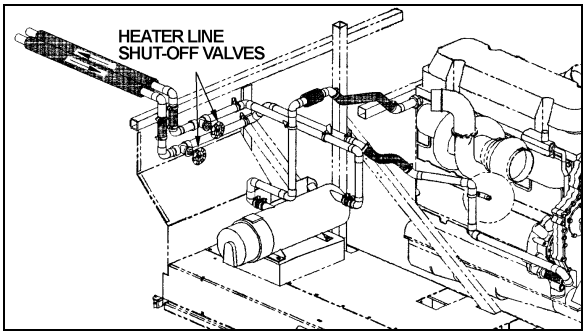

FIGURE 7: COACHES SHUT-OFF VALVES (TYP.) 01142

⚠ WARNING ⚠

Before proceeding with the following steps, make sure the coolant has cooled down. The sudden release of pressure from a heated cooling system can result in loss of coolant and possible personal injury (scalding) from the hot liquid.

2. Unscrew the surge tank pressure cap counterclockwise, ¼ turn to let air enter the system and permit the coolant to drain completely from system.

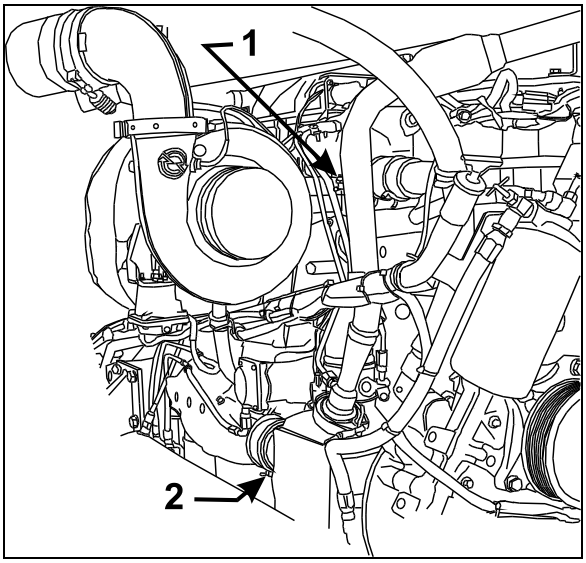

FIGURE 8: ENGINE COOLANT DRAIN COCKS 05088

3. Unscrew the water pump housing inlet line drain plug (Fig. 9).

4. Open drain cock at bottom of thermostat housing to drain the coolant trapped above the thermostats (1, Fig. 8).

5. Open the radiator drain cock.

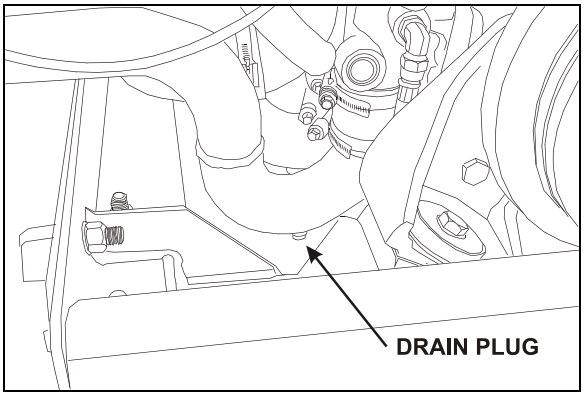

FIGURE 9: WATER PUMP DRAIN PLUG 05072

6. Open engine drain cock (2, Fig. 8).

7. Remove the transmission oil cooler. Drain, flush and inspect. Refer to Section 7, "TRANSMISSION" for oil cooler maintenance or preventive replacement.

⚠ CAUTION ⚠

Drain water pump completely before extended storage to avoid possible water pump damage.

If freezing weather is anticipated and the engine is not protected with antifreeze, drain the cooling system completely when vehicle is not in use. Trapped water in the cylinder block, radiator or other components may freeze and expand resulting in damages. Leave the drain plugs open until the cooling system can be filled with coolant fluid. Do not run engine with cooling system empty.

To drain the entire system, do the previous steps while maintaining the shutoff valves in the open position; then follow the procedure under *"9.2 Draining Heating System"* in Section 22.

6. FILLING COOLING SYSTEM

If only the engine and related components were drained, maintain the two heater line shutoff valves in their closed position, then proceed as follows.

1. Close all drain cocks. Refer to draining procedure for the location of draining points.

2. Refill cooling system from the surge tank filler cap inlet with a recommended ethylene glycol-based antifreeze and water solution of the required concentration. Add Detroit

Diesel selected product cooling system inhibitors (if required).

NOTE
The coolant level should remain within two inches of the surge tank filler neck.

NOTE
Make sure the vent line at top of thermostat housing is properly connected and not obstructed. The vent line (thermostat housing dome to radiator top tank) is required to ensure complete engine fill and proper venting of air in the system.

3. Install the filler and pressure caps, then start the engine and run it at fast idle until reaching normal operating temperature. Check for leaks.

NOTE
If for any reason, the coolant level drops below the surge tank level probe, the Check Engine light will flash

4. Stop engine and allow cooling.
5. Open the two heater line shutoff valves, check the coolant level in the surge tank, and then add as required.

⚠ CAUTION ⚠
Never pour cold coolant into a hot engine. The sudden change in temperature may crack the cylinder head or block.

If the entire system has been drained, redo the previous steps while maintaining the two heater line shutoff valves in the "Open" position. With engine running, activate the driver's and central heating systems to permit coolant circulation. Complete the procedure by bleeding the heater cores as explained in Section 22, under *"9.4 Bleeding Heating System".*

7. FLUSHING

If the cooling system is contaminated, flush the cooling system as follows:

1. Drain the coolant from the engine.
2. Refill with clean water.

⚠ CAUTION ⚠
If the engine is hot, fill slowly to prevent rapid cooling and distortion of the engine castings.

3. To thoroughly circulate the water, start and run the engine for 15 minutes after the thermostats have opened.
4. Fully drain system.
5. Refill with clean water and operate for 15 minutes after the thermostats have opened.
6. Stop engine and allow cooling.
7. Fully drain system.

Vehicles without coolant filters:

Fill with a 50/50-antifreeze/water solution and add required inhibitors.

Vehicles with coolant filters:

Replace the coolant filter with a precharge element filter; in this case do not mix inhibitors with antifreeze/water solution.

Dispose of spent fluids in an environmentally responsible manner according to regulations in effect in your area.

7.1 COOLING SYSTEM DESCALERS

If the engine overheats and the fan belt tension, coolant level and thermostat operation have been found to be satisfactory, it may be necessary to de-scale and flush the entire cooling system.

Remove scale formation by using a reputable and safe de-scaling solvent. Immediately after using the de-scaling solvent, neutralize with a neutralizing agent. It is important that product directions be thoroughly read and followed.

After using the solvent and neutralizer, fully drain the system, and then reverse flush the engine and radiator (see *"Reverse Flushing" in this section)* before filling the system with coolant solution.

7.2 REVERSE FLUSHING

After the engine and radiator have been thoroughly de-scaled, they should be reverse-flushed. The water pump should be removed and the radiator and engine reverse-flushed separately to prevent dirt and scale deposits from clogging the radiator tubes or being forced through the pump. Reverse flushing is accomplished by hot water, under pressure, being forced through the cooling system in a

direction opposite to the normal flow of coolant, loosening and forcing deposits out.

The radiator is reverse flushed as follows:

1. Remove the radiator inlet and outlet hoses and replace existing radiator cap with a new one.
2. Attach a hose to the top of the radiator to lead water away from the engine.
3. Attach a hose at the bottom of the radiator and insert a flushing gun in the hose.
4. Connect the water hose of the gun to the water outlet and the air hose to the compressed air outlet.
5. Turn on the water and when the radiator is full, turn on the air in short blasts, allowing the radiator to fill between blasts.

NOTE
Apply air gradually. Do not exert more than 138 kPa (20 psi) air pressure. Too great a pressure may rupture a radiator tube.

6. Continue flushing until only clean water is expelled from the radiator.

The cylinder block and cylinder head water passages are reverse flushed as follows:

1. Remove the thermostats and the water pump.
2. Attach a hose to the water inlet of oil cooler housing to drain water away from engine.
3. Attach a hose to the water outlet at the top of the cylinder head (thermostat housing) and insert the flushing gun in the hose.
4. Turn on the water until the jackets are filled, and then turn on the air in short blasts. Allow jackets to fill with water between air blasts.
5. Continue flushing until the water from the engine runs clean.

If scale deposits in the radiator cannot be removed by chemical cleaners or reverse flushing as outlined above, it may be necessary to remove the upper tank and rod out the individual radiator tubes with flat steel rods. Circulate the water through the radiator core from the bottom to the top during this operation.

8. SPIN-ON COOLANT FILTER

The optional engine cooling system filter is used to filter out impurities such as scale or sand from the coolant and it also eliminates the process of adding inhibitors to the antifreeze/water solution. The filter is located beside the belt tensioning arm (Fig. 10).

The precharge element filter lasts for 12,500 miles (20 000 km) or one year, whichever comes first. Replace the precharge element filter with a maintenance element filter, which lasts for 200,000 miles (320 000 km) or two years, whichever comes first. Each time the coolant is renewed, a precharge element filter must be installed before installing a maintenance element filter.

NOTE
If a coolant filter is to be installed on an engine already in service, drain and flush the cooling system before installing the filter.

To replace a filter:

1. Close the two filter shutoff cocks on the filter mounting head and unscrew the old filter from mounting.

⚠ WARNING ⚠
Failure to relieve cooling system pressure may result in personal injury.

2. Remove and discard the filter.
3. Clean the filter adapter with a clean, lint-free cloth.

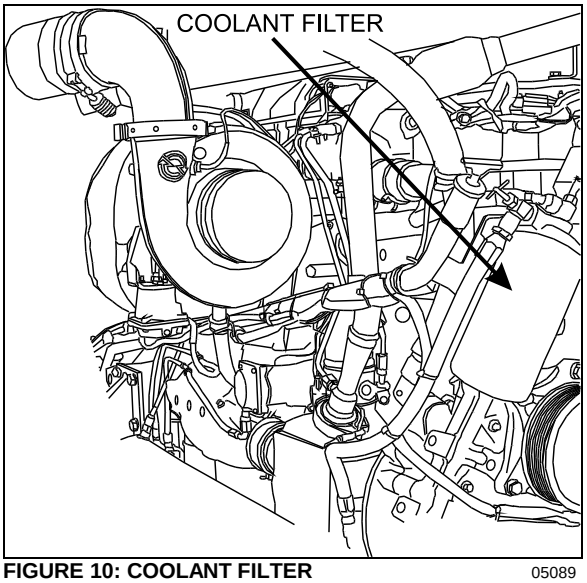

FIGURE 10: COOLANT FILTER 05089

4. Coat surface of gasket with oil, tighten 2/3 to 1 turn after gasket makes contact with head.
5. Open the two filter shutoff cocks.
6. Start engine and check for leaks.

⚠ CAUTION ⚠

Do not exceed recommended service intervals.

9. RADIATOR

The radiator is mounted on the L.H. side of engine compartment. It is designed to reduce the temperature of the coolant under all operating conditions. It is essential that the radiator core be kept clean and free from corrosion and scale at all times.

9.1 MAINTENANCE

Inspect the exterior of the radiator core every 25,000 miles (40 000 km) or once a year, whichever comes first. Clean with a quality grease solvent, such as a mineral spirits and dry with compressed air. Do not use fuel oil, kerosene, gasoline, or any caustic material. It may be necessary to clean the radiator more frequently if the vehicle is operated in extremely dusty or dirty areas. Refer to coolant system flushing and reverse flushing in this section for maintenance of radiator interior.

10. VARIABLE SPEED RADIATOR FAN

The radiator fan has two thermostatically controlled speeds. The ECM controls the speed by comparing data from engine coolant temperature, charge air cooling temperature, engine oil temperature, A/C condenser temperature, transmission retarder state, manual switch to a set of calibration data. Once fan switches to a state, it stays at that state for 30 seconds long before changing, to reduce clutch cycling. The fan drive clutch is electromagnetic; the ECM sends an electric current to regulate speed by activating one magnetic coil for the first speed and two magnetic coils for the second speed.

The settings are:

- 190°F (87.5°C) Thermostat starts to open
- 192°F (89°C) Fan medium speed, descending, off
- 196°F (91°C) Fan medium speed, rising, on
- 199.5°F (93°C) Fan high speed, descending, off
- 203°F (95°C) Fan high speed, rising, on
- 205°F (96°C) Thermostats fully open

NOTE

In case of an electrical power failure: remove the bolt from the end of the shaft and screw it into the locking plate. This procedure will prevent engine from overheating by forcing fan rotation (Fig. 11).

On certain models, the mechanical locking device consists of two threaded bushings fixed on the pulley and two drilled metal plates fixed on the rotor. Use the two screws located on the face of the clutch to fasten the metal plates and the bushings (Fig.12).

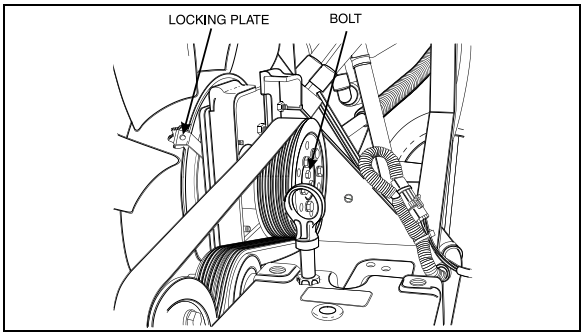

FIGURE 11: MECHANICAL LOCKING DEVICE 05061

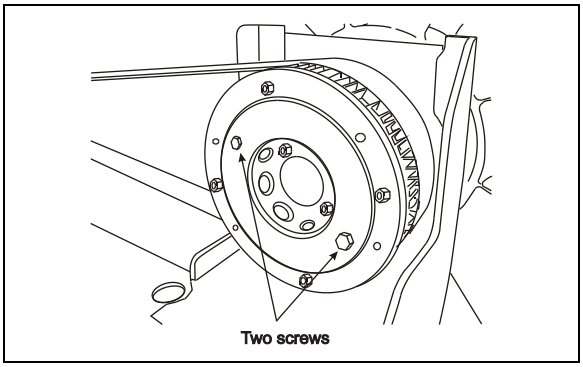

FIGURE 12: SCREWS LOCATION

10.1 MAINTENANCE

1. Clean the fan and related parts with clean fuel oil and dry them with compressed air. Do not clean with steam or high-pressure jet.
2. Check the fan blades for cracks or other damage. Replace the fan if the blades are cracked or deformed.

3. Remove any rust or rough spots in the grooves of the fan pulley. If the grooves are damaged or severely worn, replace the pulley.
4. Do not add any fluids or lubricants to the fan driving mechanism.
5. Do not restrict fan rotation during engine operation for any reason.
6. Do not operate fan-driving mechanism with a damaged fan assembly. Replace a damaged fan as soon as the fault is noted.
7. Immediately investigate and correct any operator complaint involving driving mechanism or cooling system performance.
8. When questions arise, obtain answers before proceeding. Assistance is available through the authorized Field Sales distributor serving your area.

10.2 INSPECTION

⚠ WARNING ⚠

Set the starter selector switch in engine compartment to the "Off" position to prevent accidental starting of the engine.

- Check security of fasteners securing fan blade assembly to fan driving mechanism.
- Check coupling installation between fan blade assembly and gearbox.
- Visually inspect fan driving mechanism, fan blade assembly, shroud, radiator, and surrounding area for evidence of contact between rotating and non-rotating parts.
- Check fan transfer belt for fraying, cracking, and proper tension.
- Turn fan through at least 360° of rotation. It should turn smoothly with no resistance.

10.3 THERMOSTAT OPERATION

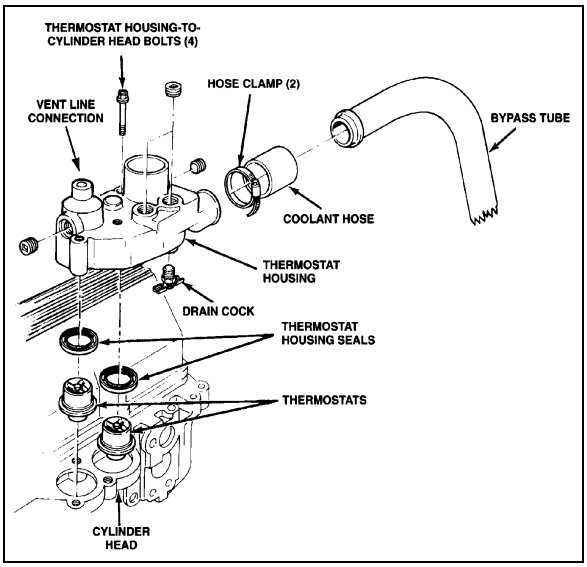

FIGURE 13: THERMOSTAT AND RELATED PARTS 05034

Coolant temperature is controlled by two blocking-type thermostats located in a housing attached to the cylinder head, on the turbo side of the engine (Fig. 13).

At coolant temperature below approximately 190°F (88°C), the thermostat valves remain closed and block the flow of coolant from the engine to the radiator. During this period, all of the coolant in the system is recirculated through the engine and directed back to the suction side of the water pump via a bypass tube. As the coolant temperature rises above 190°F (88°C) the thermostat valves start to open, restricting the bypass system, and allowing a portion of the coolant to recirculate through the radiator. When the coolant temperature reaches approximately 205-207°F (96-97°C) thermostat valves are fully open, the bypass system is blocked off and the coolant is directed through the radiator.

11. FAN GEARBOX

The radiator fan is belt driven from the engine crankshaft pulley through a standard gearbox, which is designed with two output shafts.

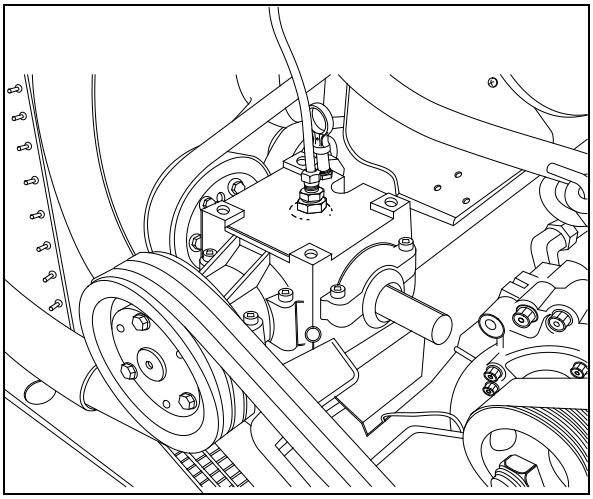

FIGURE 14: FAN GEARBOX 05062

11.1 MAINTENANCE

Change the gearbox oil at 3,000 miles (4,800 km) and subsequently every 50,000 miles (80,000-km) or once a year, whichever comes first.

11.2 OIL CHANGE

1. Stop engine and make sure that all engine safety precautions have been observed.
2. Remove the drain plug located underneath the gearbox case.
3. Drain gearbox.
4. Replace drain plug.
5. Remove the dipstick located on top of gearbox and wipe with a clean rag (Fig. 14).
6. Adjust level to ″Full″ mark using Mobil SHC 630 (Prévost #180217) synthetic oil.
7. Insert dipstick in gearbox case, then remove again to check mark.
8. Reinsert the dipstick.

12. RADIATOR FAN BELT REPLACEMENT

Locate the belt tensioner pressure-releasing valve (Fig. 15), then turn handle counter-clockwise in order to release pressure in belt tensioner air bellows, thus releasing tension on belts.

Remove existing belts (3″V″belts & 1 Poly) from fan assembly and replace with new ones.

Turn the pressure-releasing valve clockwise to its initial position to apply tension on the new belts.

NOTE
For proper operation of the belts, adjust the air bellows tensioner pressure regulating valve (located next to control valve) to 50 psi (345 kPa) for XL2 Coaches and to 45 psi (310 kPa) for XL2 MTH.

12.1 BELT TENSION ADJUSTMENT

The regulator is located in the engine compartment behind the belt tension pressure releasing valve panel. Turn the screw located under the regulator assembly to change the tension pressure. Check proper pressure using the pressure check valve (Fig. 15).

Use Belt Tension Gauge #68-2404 to measure tension of engine belts. For proper operation of air tensioners, adjust upper tensioning bracket to provide a ¼" (7 mm) gap between stopper and bracket under normal pressure of 50 psi - 345 kPa or 45 psi - 310 kPa. Refer to figure 16 for more information.

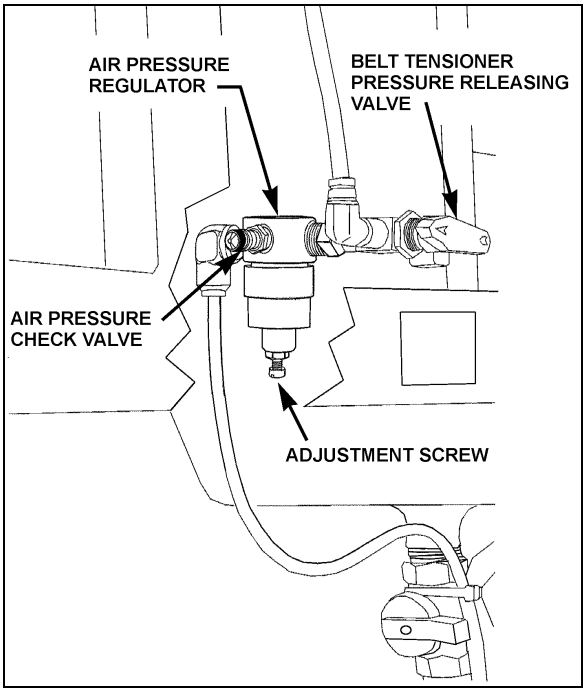

FIGURE 15: REGULATOR VALVE 12200

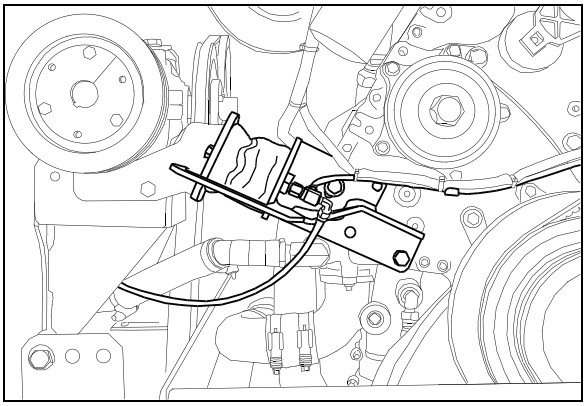

FIGURE 16: BELT TENSIONER 01059

13. FAN DRIVE ALIGNMENT

1. Install both attachment assembly plates (P/N 051779) (48, Fig. 17) through lower plating and secure with four spring nuts (P/N 500666), (70, Fig. 17). Then install one spacer (P/N 050705), (49, Fig. 17) on each spring nut at both anchoring locations (Fig. 17).
2. Center seat assembly in the fan shroud using the horizontal displacement of the fan driving mechanism support. Center with the slots in the floor at anchoring angle support (on some vehicles only). Vertical displacement of the fan clutch is made possible by slots at the base of the fan clutch (on some vehicles only) or by shimming with additional spacers at anchoring locations. Temporarily secure assembly with two nuts (P/N 500709), (74, Fig. 17) at both anchoring locations.

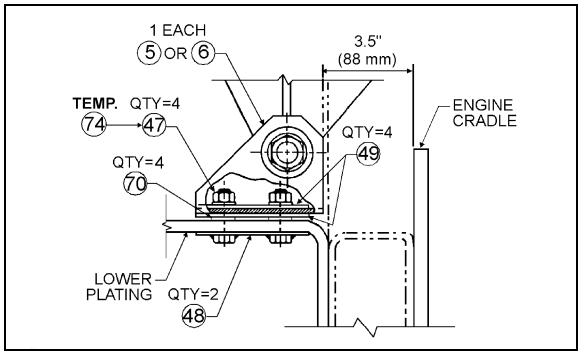

FIGURE 17: ANGLE SUPPORT 05014

⚠ CAUTION ⚠

Tilt fan and check for clearance.

3. Using a straight edge, align the 3"V"pulley on gearbox central shaft pulley with engine pulley, while taking pulleys outer edge thickness under consideration i.e. 3"V"pulley's outer edge is thicker than that of engine pulley's (Fig. 18).

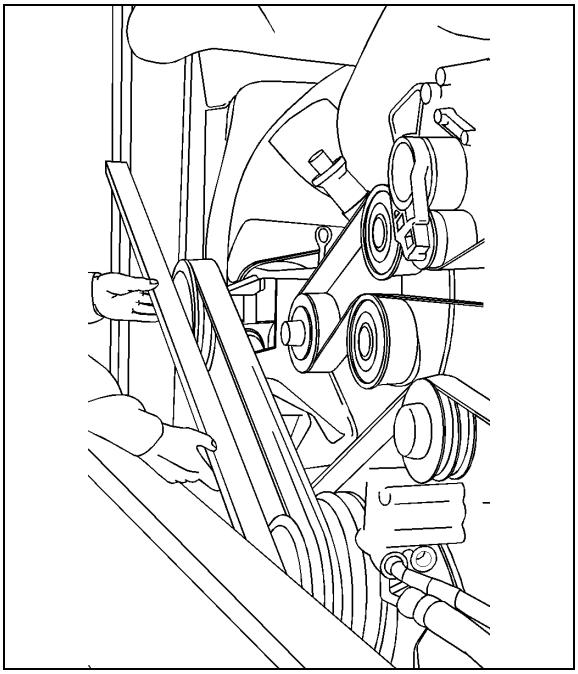

FIGURE 18: PULLEY ALIGNMENT 05064

4. Using a universal protractor, check 3"V" pulley's vertical angle with that of engine pulleys. If angles do not correspond, raise seat assembly by shimming with additional spacers (#49 - P/N 050705).

NOTE

Use a straight edge to measure engine pulley's vertical angle (Fig. 19).

5. Check alignments again (steps 2, 3 & 4) then replace temporary anchoring nuts (P/N 500709) (74, Fig. 17) with four nuts (P/N 500714) (47, Fig. 17) and tighten using a wrench.

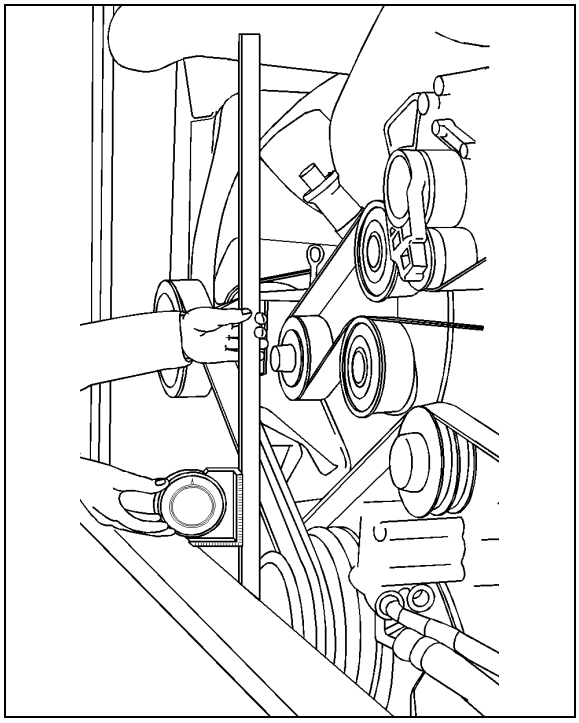

FIGURE 19: PULLEY VERTICAL ANGLE 05063

6. Align multi "V" pulley with fan pulley. Adjust the depth of the pulley on the gearbox shaft.
7. Set belt tensioner pressure regulating valve to 50 PSI - 345 kPa.

⚠ CAUTION ⚠

In order for tensioning system to work properly, adjust upper tensioning bracket to provide a ¼" (7 mm) gap between stopper and bracket. Otherwise, release tension on system and readjust distance using bolts securing upper tensioning bracket (Fig. 16).

.

14. SPECIFICATIONS

Cooling System Capacity (Approximation)

Includes heating system ..... 24 US gal (91 liters)

Thermostat

Number used 2
Start to open ..... 186-193°F (86-89°C)
Fully open ..... 207°F (97°C)

Radiator

Make ..... Valeo
Location ..... Rear L.H. side
XL2 Coaches, W0 & WE MTH
Supplier number 1040153
Prevost number 550820
W5 MTH
Supplier number 1040149
Prevost number 550819

Surge Tank Filler Cap

Make ..... Stant
Model R3
Prevost number 052355

Pressure Cap

Make ..... Stant
Pressure setting ..... 14 psi (96.53 kPa)
Supplier number R12
Prevost number 550606

Fan Clutch

Make ..... Linnig
Type ..... 3 speed
XL2 Buses
Supplier number LA1.2.0118
Prevost number 550837
XL2 MTH
Supplier number LA1.2.0131Y
Prevost number 550839

Note: *The fan clutch is controlled by DDEC (not by thermoswitch).*

Fan Gearbox

Make ..... Superior Gearbox
Ratio 1:1
Supplier number 411ACF-097-6
Prevost number 550789
Lubricating Oil ..... MOBIL SHC 630
Prevost number (Oil) 683666

Fan Belt (gearbox-fan)

Make ..... Dayco
Type ..... Poly-V
Qty 1

XL2 Coaches, W0 & WE XL2 MTH:

Supplier number ..... 10-55”
Prevost number 506684

W5 XL2 MTH:

Supplier number 12 PK-2100
Prevost number 507627

Fan Belt (gearbox-motor)

Make ..... Dayco
Type ..... V belt
Qty 3

XL2 Coaches:

Supplier number AX-71
Prevost number 505522

W0 & WE XL2 MTH:

Supplier number AX-73
Prevost number 506691

W5 XL2 MTH:

Supplier number 3/BX-77
Prevost number 509822

Coolant

Prevost Number 685125
DDC (Power Cool) 23512138
Prestone (Heavy Duty) ..... AF977 (bulk), 72702 (3.78 L), 70119 (205L), 70102 (4L)

Corrosion Inhibitor and Coolant Stabilizer

Supplier number..... Detroit Diesel 23507857
Supplier number..... Nalco DD3000-15

Coolant Filter

Number used 1
Make ..... Nalco
Type ..... Spin-on

MAINTENANCE ELEMENT FILTER

Supplier number. .... Detroit Diesel 23507545
Supplier number..... Nalco DDF3000
Prevost number 550630

PRECHARGE ELEMENT FILTER

Supplier number. .... Detroit Diesel 23507189
Supplier number..... Nalco DDF60
Prevost number 550629

SECTION 06: ELECTRICAL

CONTENTS

1. GENERAL DESCRIPTION 06-5

1.1 WIRING DIAGRAMS 06-5
1.1.1 Wiring Diagram Keys 06-5
1.1.2 Using Wiring Diagrams 06-5
1.1.3 Testing Circuits 06-5
1.2 WIRE SIZES AND COLORS 06-5
1.3 SPARE WIRES 06-6
1.4 CLEANING CONNECTORS 06-6
1.5 CIRCUIT BREAKERS 06-6
1.6 RELAYS 06-6

2. XL2 COACHES ELECTRICAL COMPARTMENTS AND JUNCTION BOXES 06-9

2.1 MAINTENANCE 06-9
2.2 BOOSTER BLOCK 06-9
2.3 BATTERY SAFETY SWITCH 06-10
2.4 BATTERIES 06-10
2.5 CIRCUIT BREAKERS 06-10
2.6 FRONT SERVICE COMPARTMENT 06-10
2.6.1 L.H. Side of Front Baggage Compartment (Vehicle Equipped With Video System) 06-11
2.7 ENGINE COMPARTMENT (REAR JUNCTION BOX) 06-11

3. XL2 MOTORHOMES ELECTRICAL COMPARTMENTS AND JUNCTION BOXES 06-13

3.1 MAINTENANCE 06-14
3.2 BOOSTER BLOCK 06-14
3.3 BATTERY SAFETY SWITCH 06-14
3.4 BATTERIES 06-15
3.5 CIRCUIT BREAKERS 06-15
3.6 FRONT SERVICE COMPARTMENT 06-16
3.7 ENGINE COMPARTMENT (REAR JUNCTION BOX) 06-17

4. BATTERIES 06-17

4.1 BATTERY REMOVAL AND INSTALLATION 06-18
4.1.1 XL2-45 Coach 06-18
4.1.2 XL2-40, XL2-45E and XL2 45 Bus Shells 06-18
4.2 BATTERY RATING 06-19
4.3 BATTERY TESTING 06-19
4.3.1 Visual Inspection 06-20
4.3.2 Removing Surface Charge 06-20
4.3.3 Load Test 06-20
4.3.4 Testing Battery Cables 06-20
4.4 BATTERY CHARGING 06-21
4.4.1 Battery Charging Guide 06-22
4.4.2 Emergency Jump Starting With Auxiliary (Booster) Battery 06-22
4.5 CLEANING AND INSPECTION 06-23
4.6 COMMON CAUSES OF BATTERY FAILURE 06-23
4.7 TROUBLESHOOTING 06-24

5. ELECTRICAL SYSTEM MONITOR 06-24

5.1 TELLTALE LIGHT DEFINITIONS 06-24

6. BOSCH ALTERNATOR 06-25

6.1 TWIN BOSCH ALTERNATORS INSTALLATION 06-25

7. DELCO ALTERNATOR 06-25

8. CHARGING SYSTEM TROUBLESHOOTING 06-29

8.1 ALTERNATOR OR VOLTAGE REGULATOR 06-29
8.2 ALTERNATOR DIAGNOSIS 06-29
8.2.1 Diode Checks 06-29
8.2.2 Field Winding Check 06-31
8.2.3 Stator Winding Check 06-31
8.3 DIODE REPLACEMENT 06-31
8.3.1 Diode Replacement (in Support) 06-32
8.3.2 Diode Replacement (in End Frame) 06-32
8.4 FIELD REMOVAL 06-32
8.5 FIELD INSTALLATION 06-32
8.6 STATOR REPLACEMENT 06-33
8.6.1 Removal 06-33
8.6.2 Soldering Stator Terminal Leads 06-33
8.6.3 Installation 06-33
8.7 DIODE END COVER INSTALLATION 06-33
8.8 ALTERNATOR REMOVAL (DELCO) 06-33
8.8.1 Disassembly of Alternator 06-34
8.8.2 Alternator Cleaning and Inspection 06-35
8.8.3 Bearing or Rotor Replacement 06-35
8.8.4 Alternator Reassembly 06-36
8.8.5 Output check 06-36
8.9 ALTERNATOR DRIVE BELT 06-36
8.9.1 Adjustment 06-36

9. VOLTAGE REGULATOR (DELCO) 06-36

9.1 TROUBLESHOOTING PROCEDURES 06-37
9.1.1 Undercharged Battery 06-38
9.1.2 Overcharged Battery 06-39
9.2 REGULATOR CHECKS 06-39
9.3 ADJUSTING VOLTAGE 06-40

10. BATTERY EQUALIZER 06-40

11. STARTER 06-40

12. ENGINE BLOCK HEATER 06-40

12.1 MAINTENANCE 06-40

13. EXTERIOR LIGHTING 06-40

13.1 HEADLIGHTS 06-41
13.1.1 Headlight Beam Toggle Switch 06-41
13.1.2 Maintenance 06-41
13.1.3 Headlight Adjustment 06-41
13.1.4 Sealed-Beam Unit 06-45
13.1.5 Front Turn Signal 06-45
13.1.6 Optional Xenon Headlamp 06-46
13.2 STOP, TAIL, DIRECTIONAL, BACK-UP, AND HAZARD WARNING LIGHTS 06-47
13.2.1 Lamp Removal and Replacement 06-47
13.2.2 Center Stoplights and Cyclops Light Removal and Replacement 06-47
13.3 LICENSE PLATE LIGHT 06-47
13.4 CLEARANCE, IDENTIFICATION AND MARKER LIGHTS 06-47
13.4.1 Marker Light Removal and Replacement 06-47

13.4.2 Clearance and Identification Light Removal and Replacement 06-47
13.5 DOCKING AND CORNERING LIGHTS 06-48
13.5.1 Lamp Removal and Replacement 06-48
13.6 FOG LIGHTS 06-48
13.6.1 Bulb Removal and Replacement 06-48

14. INTERIOR LIGHTING EQUIPEMENT 06-49

14.1 CONTROL PANEL LIGHTING 06-49
14.1.1 Switch Lighting 06-49
14.1.2 Telltale Light Replacement 06-49
14.1.3 Gauge Light Bulb Replacement 06-49
14.2 STEPWELL LIGHTS (COACHES ONLY) 06-49
14.2.1 Bulb Removal and Replacement 06-49
14.3 LAVATORY NIGHT-LIGHT 06-49
14.3.1 Bulb Removal and Replacement 06-49
14.4 DRIVER'S AREA LIGHTS 06-49
14.4.1 Bulb Removal and Replacement 06-49
14.5 PASSENGER SECTION LIGHTING 06-50
14.5.1 Fluorescent Tube Replacement 06-50
14.5.2 Removal and Replacement of In-Station Fluorescent Tubes 06-51
14.5.3 Removal and Replacement of Reading Lamp Bulb 06-51
14.6 ENGINE COMPARTMENT LIGHTING 06-51
14.7 LAVATORY LIGHT 06-52

15. LIGHT BULB DATA 06-52

16. SPECIFICATIONS 06-54

ILLUSTRATIONS

FIGURE 1: WIRE IDENTIFICATION 06-6
FIGURE 2: TYPES OF RELAYS 06-8
FIGURE 3: ELECTRICAL COMPARTMENT (XL2-45 COACH) 06-9
FIGURE 4: MAIN POWER COMPARTMENT (XL2-45) 06-9
FIGURE 5: LOCATION OF A/C JUNCTION BOX IN EVAPORATOR COMPARTMENT 06-10
FIGURE 6: A/C JUNCTION BOX 06-10
FIGURE 7: TOP SECTION OF FRONT SERVICE COMPARTMENT 06-11
FIGURE 8: BOTTOM SECTION OF FRONT SERVICE COMPARTMENT 06-11
FIGURE 9: DDR CONNECTOR LOCATION IN DRIVER'S AREA 06-11
FIGURE 10: REAR JUNCTION BOX SWITCHES 06-12
FIGURE 11: REAR JUNCTION BOX 06-12
FIGURE 12: ELECTRICAL COMPARTMENTS (XL2-40 BUS SHELLS) 06-13
FIGURE 13: ELECTRICAL COMPARTMENTS (XL2-45E BUS SHELLS) 06-13
FIGURE 14: ELECTRICAL COMPARTMENTS (XL2-45 BUS SHELLS) 06-14
FIGURE 15: BREAKER PANEL 06-14
FIGURE 16: ENGINE COMPARTMENT R.H. SIDE 06-15
FIGURE 17: LOCATION OF A/C JUNCTION BOX IN EVAPORATOR COMPARTMENT 06-16
FIGURE 18: A/C JUNCTION BOX 06-16
FIGURE 19: TOP SECTION OF FRONT SERVICE COMPARTMENT 06-16
FIGURE 20: BOTTOM SECTION OF FRONT SERVICE COMPARTMENT 06-16
FIGURE 21: DDR CONNECTOR LOCATION IN DRIVER'S AREA 06-16
FIGURE 22: REAR JUNCTION BOX SWITCHES 06-17
FIGURE 23: REAR JUNCTION BOX 06-17
FIGURE 24: BATTERIES (TYPICAL) 06-17
FIGURE 25: TEST INDICATOR 06-19

FIGURE 26: LOAD TEST 06-20
FIGURE 27: ALLIGATOR CLAMPS AND BATTERY 06-21
FIGURE 28: TWIN BOSCH ALTERNATORS INSTALLATION 06-26
FIGURE 29: ALTERNATORS AND ACCESSORIES MOUNTING TORQUES 06-26
FIGURE 30: 50DN DELCO ALTERNATOR SECTIONAL VIEW 06-27
FIGURE 31: ALTERNATOR WIRING DIAGRAM (DELCO) 06-27
FIGURE 32: CONNECTIONS FOR CHECKING ALTERNATOR OUTPUT 06-28
FIGURE 33: VIEW OF RECTIFIER END FRAME WITH COVER REMOVED 06-30
FIGURE 34: DIODE TESTING 06-30
FIGURE 35: DIODE TESTING 06-31
FIGURE 36: STATOR WINDING TEST 06-31
FIGURE 37: ALTERNATOR (HOSES AND WIRES) 06-34
FIGURE 38: ALTERNATOR RETAINING BOLTS AND WASHERS 06-34
FIGURE 39: ALTERNATOR DRIVE BELT 06-36
FIGURE 40: VOLTAGE REGULATOR 06-37
FIGURE 41: TYPICAL WIRING DIAGRAM OF A NEGATIVE GROUND SYSTEM 06-37
FIGURE 42: REGULATOR VOLTAGE SETTING 06-38
FIGURE 43: ADJUSTING REGULATOR VOLTAGE SETTING 06-38
FIGURE 44: REGULATOR VOLTAGE TEST (UNDERCHARGED BATTERY) 06-38
FIGURE 45: CHECKING TRANSISTOR TR1 06-39
FIGURE 46: CHECKING TRANSISTOR TR2 06-40
FIGURE 47: ELECTRIC HEATER PLUG LOCATION 06-40
FIGURE 48: HEADLIGHT ASSEMBLY 06-41
FIGURE 49: OPENING HEADLIGHT ASSEMBLY 06-41
FIGURE 50: HEADLIGHT ASSEMBLY REAR VIEW 06-41
FIGURE 51: SUPPORT RAIL INSTALLATION 06-42
FIGURE 52: INSTALLATION OF JIGS 06-42
FIGURE 53: INSTALLATION OF HOOPY 100 ALIGNER 06-42
FIGURE 54: ADJUSTING HOOPY 100 LEVEL 06-42
FIGURE 55: SPIRIT LEVEL 06-42
FIGURE 56: INSTALLING CALIBRATION FIXTURES 06-43
FIGURE 57: ALIGNMENT OF HEADLIGHT AIMING SCREEN 06-44
FIGURE 58: HIGH-INTENSITY ZONE (SHADED AREA) OF A PROPERLY AIMED UPPER BEAM ON THE AIMING SCREEN 7.6 M (25FT) IN FRONT OF VEHICLE 06-44
FIGURE 59: HIGH-INTENSITY ZONE (SHADED AREA) OF A PROPERLY AIMED LOWER BEAM ON THE AIMING SCREEN 7.6 M (25FT) IN FRONT OF VEHICLE 06-44
FIGURE 60: AIM INSPECTION LIMITS FOR UPPER-BEAM HEADLIGHTS 06-45
FIGURE 61: AIM INSPECTION LIMITS FOR LOWER-BEAM HEADLIGHTS 06-45
FIGURE 62: XENON HEADLAMP LOCATION 06-46
FIGURE 63: VARIOUS LIGHTS LOCATION 06-48
FIGURE 64: SWITCH 06-49
FIGURE 65: PARCEL RACK LIGHTING 06-51
FIGURE 66: ENGINE COMPARTMENT LIGHT 06-51

1. GENERAL DESCRIPTION

This vehicle uses a dual voltage system to obtain two different voltages (12 and 24 volts) for various electrical controls and accessories. The main power source incorporates four maintenance-free “Delco” model 1150 batteries connected in parallel-series. All batteries are kept uniformly charged by means of a 100 amp battery equalizer (standard), giving a maximum possible output supply of 100 amps on the 12 volt system. Both the 12 and 24 volt systems are controlled through individual main battery relays. One or two 24 volt self-rectified alternators are belt driven from the engine, and can be reached through the engine compartment door.

1.1 WIRING DIAGRAMS

A master wiring diagram of the electric circuits, covering standard and optional accessories and systems, is located in the technical publications box. Usually, a separate wiring diagram page is provided for each major function or system. In some cases, more than one circuit may appear on one wiring diagram page; when this occurs, each circuit covered in this page is listed in the wiring diagram index. Moreover, a circuit may appear on several pages; in such case, the number(s) at the extremity of the diagram title will indicate the sheet reference number. Refer to the *"Wiring Diagram Index*" to ensure that the correct diagram is being used to trace the circuit in question.

1.1.1 Wiring Diagram Keys

Various symbols are used on the wiring diagrams to depict different types of electrical components. It is essential to become familiar with these symbols in order to understand the diagrams. The major symbols shown on the diagrams are identified under *"Wiring Diagram keys"* (page **K** of wiring diagrams).

1.1.2 Using Wiring Diagrams

Two methods are used to *"work"* with electric wiring diagrams.

Situation: You have identified the defective part (breaker, diode, relay, etc.), and you wish to locate its corresponding circuit.

Problem: Circuit breaker #56 is released (open circuit) and you don't know which circuit is affected.

a) Refer to wiring diagram index, and look for *"Circuit breaker code"*, pages **F**.

b) At item CB #56, in the first column, you will find the page on which to find the corresponding diagram, in the second column the breaker ampere rating, and in the third column, the Prévost number. The other columns give you the location and the function of the breaker.

c) Refer to page 4, keeping in mind the function of the breaker, i.e. emergency exit lights.

d) When you have located *“emergency exit lights”,* follow the wiring until you come across CB #56 and its circuit.

Situation: You have a problem with a specific system and you want to find the corresponding diagram.

Problem: The last three (3) speakers on the R.H. side of vehicle are inoperative and you must trace the electric circuit.

a) Refer to wiring diagram index and look for *“Sound system”.*

b) You will find on page 26 the components as well as the electric wiring, thus providing you with a complete understanding of this circuit.

1.1.3 Testing Circuits

A careful study of the wiring diagrams should be made to determine the source and flow of current through each circuit. When a circuit is thoroughly understood, a point-to-point check can be made with the aid of the applicable wiring diagrams. Any circuit can be tested for continuity or short circuits with a multimeter or a suitable voltmeter.

All electrical connections must always be kept clean and adequately tight. Loose or corroded connections can result in discharged batteries, difficult starting, dim lights and improper functioning of other electric circuits. Inspect all wiring connections at regular intervals. Make sure knurled nuts on all amphenol-type plugs are securely tightened. Knurled nuts on the plastic amphenol-type connectors will click into a detent when properly tightened. Line connectors, who have the side locking tabs, must have the locks latched in place to ensure a proper electrical connection.

1.2 WIRE SIZES AND COLORS

Each wire in the electrical system has a specific size as designated on the wiring diagram. When replacing a wire, the correct size must be used. Never replace a wire with one of a smaller size.

The vehicle electrical system is provided with different voltages. The insulation on each wire is

distinctly colored in order to determine visually the wiring voltage and to assist in making connectors. The wires are color coded as follows:

Red	24 volt system
Yellow	12 volt system
Black	grounded wire
Blue	110 V ac system (live)
White	110 V ac system (neutral)
Green	110 V ac system (ground)
Orange	speakers (+)
Brown	speakers (-)
Grey	spare wire

NOTE

Wires are identified at each 2-4 inch (5-10 cm) intervals by a printed number.

Each wire on a diagram is patterned to assist in tracing and testing circuits. The wire number identifies the voltage rating, the wire identification number and the basic wire gauge as illustrated in figure 1.

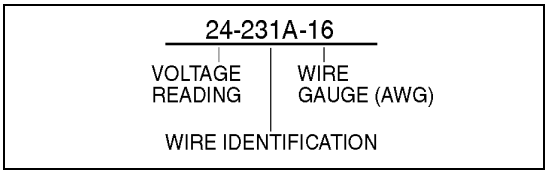

FIGURE 1: WIRE IDENTIFICATION 06048

1.3 SPARE WIRES

When the vehicle leaves the factory, and even in the case of a fully-equipped vehicle, an important number of unconnected spare wires are routed between the junction boxes. Consequently, for any connection of an additional accessory, refer to page D *"Spare wires"* in master wiring diagram to determine the number, the gauge and location of these wires.

NOTE

Spare wires are identified by a wire identification number and by the letters "SP", to designate "spare".

1.4 CLEANING CONNECTORS

When the pins and sockets of connectors become dirty, clean them with a good quality solvent containing HFC 134A refrigerant as its active ingredient. HFC 134A has two qualities that recommend it. First, it does not conduct electricity and therefore, will not cause shorting between connector pins and sockets. Second, it evaporates quickly, eliminating the possibility of condensation within the connectors.

Always shake out or gently blow out any excess HFC 134A before assembling a connector to its mating connector or hardware. HFC 134A trapped in the connector can affect the connector seal.

⚠ WARNING ⚠

HFC 134A is toxic. HFC 134A bases compounds should always be used in a well-ventilated area, never in a confined space. Use outdoor whenever possible.

1.5 CIRCUIT BREAKERS

Most electric circuits are protected by circuit breakers of the "Manual Reset" type. The main circuit breakers, as well as those protecting the A/C system, are located in the engine compartment, on R.H. side of the vehicle or in the main power depending on type of vehicle. The remaining breakers are located in the evaporator compartment, inside the A/C junction box.

CIRCUIT BREAKERS			
CB1	A/C Full Air	24 volts	200 amps
CB2	Hot Wire	12 volts	40 amps
CB3	Rear Junction Box	12 volts	70 amps
CB4	Front Junction Box	12 volts	90 amps
CB5	Hot Wire	24 volts	30 amps
CB6	Rear Junction Box	24 volts	90 amps
CB7	Front Junction Box	24 volts	90 amps
CB8	Condenser Fan Motor L.H.	24 volts	40 amps
CB9	Evaporator Fan Motor	24 volts	120 amps
CB11	Condenser Fan Motor R.H.	24 volts	40 amps

The smaller circuit breakers are accessible in the front service compartment and rear junction box. This type of circuit breaker deenergizes the circuit without disconnecting any wire. Simply press down the red tab on breaker to open the circuit, repair defective circuit, and afterwards depress black button in center of breaker to close the circuit.

1.6 RELAYS

Relays are used to automatically energize or deenergize a circuit from a remote location. The relay draws a very low current to energize its coil. Once the coil is energized, it develops a magnetic field that pulls a switch arm closed or open, to either energize or deenergize a given

component. As the control current required for the coil is very low, the relay allows a remote station to control a high energy circuit without running great lengths of costly high capacity cable, and also eliminates the need for high amperage switches and heavy connectors.
Many systems on this vehicle are provided with control relays, which are all, located in or on the junction boxes, figure 2.

NOTE
Each relay is identified with "12V" or "24V" printed on its casing in order to identify the coil operating voltage.

⚠ CAUTION ⚠
The magnetic relays for the starting motor, evaporator and both condenser motors and condenser speed controls should have the 5/16" stud nuts torqued to 50 ± 5 lbf-in (5,5 ± 0,5 Nm).

		Configuration on base	Key printed on casing	Key used on wiring diagram	Example
Cubic relay (Steel or plastic casing) Type: S.P.D.T.		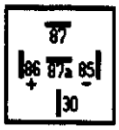	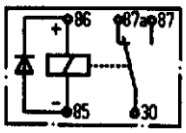	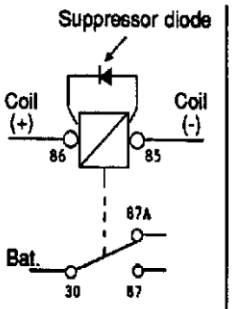	R #5
Magnetic relay (Round steel casing) Type: S.P.S.T.	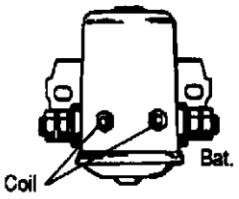	None	None	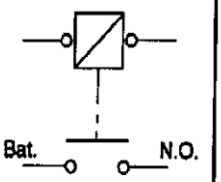	R #4
Magnetic relay (Round steel casing) Type: D.P.D.T.	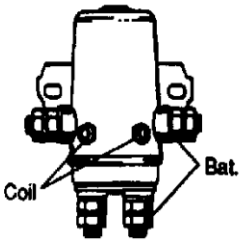	None	None	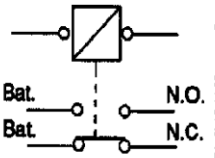	R #40

NOTE: This relay is provided with an internal suppressor diode; never reverse wiring terminals #85 and 86 at base as a direct short circuit will result.

The relay coils connected to the alternator "relay terminal" should never be provided with a suppressor diode as the output current at this terminal is not rectified, thus rendering relay inoperative.

LEGEND

Bat.	Battery
N.O.	Normally Open
N.C.	Normally Closed
S.P.D.T.	Single Pole Double Throw
S.P.S.T.	Single Pole Single Throw
D.P.D.T.	Double Pole Double Throw

FIGURE 2: TYPES OF RELAYS

06050

2. XL2 COACHES ELECTRICAL COMPARTMENTS AND JUNCTION BOXES

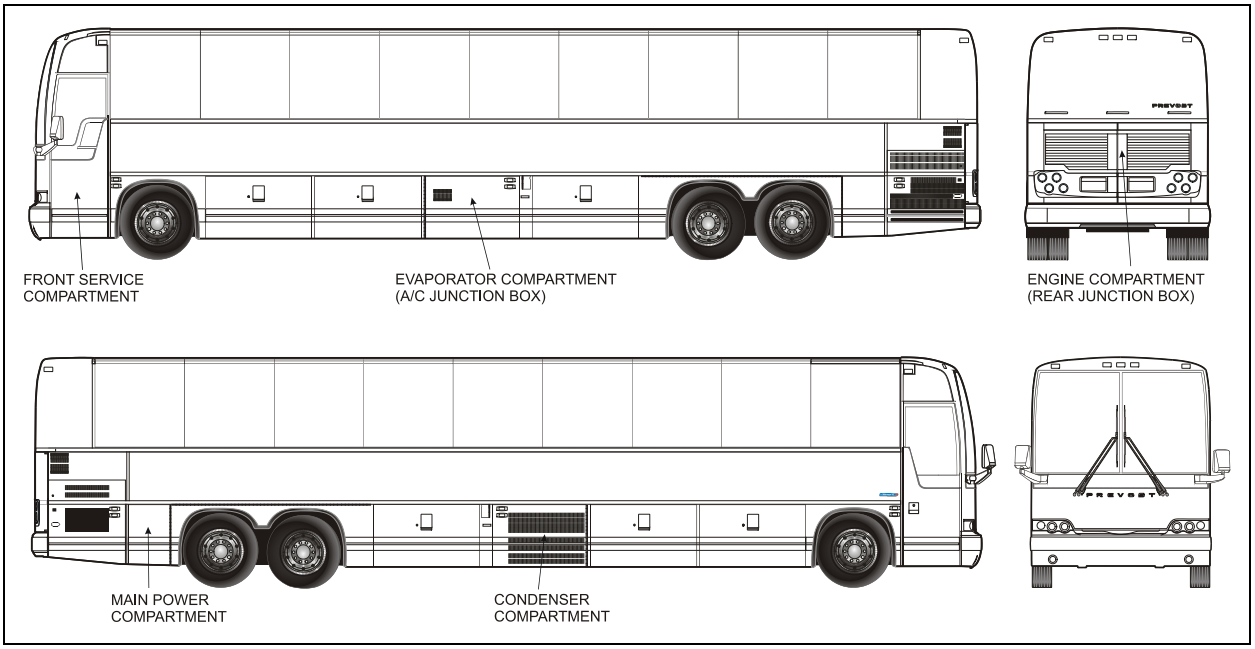

FIGURE 3: ELECTRICAL COMPARTMENT (XL2-45 COACH) 06541

2.1 MAINTENANCE

A Cortec VCI-238 corrosion inhibitor has been sprayed in all electrical compartments to protect components from corrosion. The life expectancy of this product is five years, so it is recommended to reapply it every five years. It is also recommended to spray it on new components when added or replaced.

⚠ WARNING ⚠

Use VIC-238 in a well ventilated area. Do not smoke. Avoid prolonged contact with skin and breathing of spray mist. Harmful or fatal if swallowed. Do not induce vomiting. Call physician immediately.

2.2 BOOSTER BLOCK

On XL2-45 coaches, booster block is located in the main power compartment (Fig. 4).

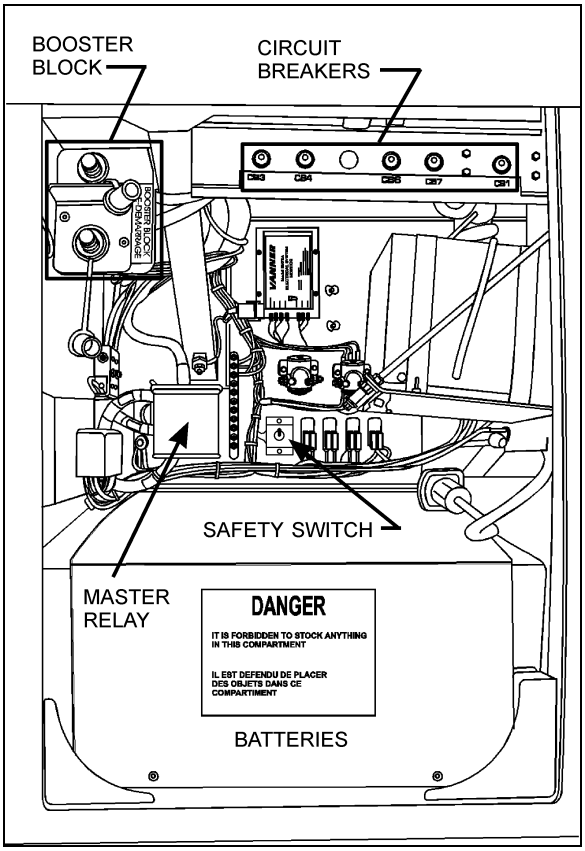

FIGURE 4: MAIN POWER COMPARTMENT (XL2-45) 06316

2.3 BATTERY SAFETY SWITCH

This switch disconnects both the 12 and 24 volts. This toggle switch is located in the main power compartment (XL2-45).

⚠ CAUTION ⚠

During repair or maintenance periods, set battery safety switch to the "OFF" position in order to avoid personal injury. This ensures that power is cut off even if master key switch is set to the "ON" position by mistake. When master key switch is set to the "OFF" position, electrical supply from the batteries is automatically cut off.

NOTE

When battery safety switch or master key switch is set to the "OFF" position, the electrical supply from the batteries is cut off, with the exception of the Fire Detection System, the Engine & Transmission Electronic Controls, the Auxiliary Heating System, the Battery Equalizers and the Digital Clock.

2.4 BATTERIES

The batteries are located in the main power compartment on the XL2-45 coach.

Electric Circuit Protection

Two types of cutoff mechanisms are installed to protect the vehicle's electrical system; fuses and manually-resettable circuit breakers. If an electrical device is inoperative, check the corresponding cutoff mechanism.

⚠ CAUTION ⚠

Never replace a fuse with a higher rated one because it will cause severe damage to the electric system.

2.5 CIRCUIT BREAKERS

Most of the manually-resettable circuit breakers are located in the: A/C junction box, rear junction box, front service compartment, and in the main power compartment. An identification decal is affixed on the inside face of each door.

XL2-45 coaches are equipped with eight (8) main breakers; they are installed in the main power compartment and in the A/C junction box in the evaporator compartment, they can be identified as follows (Fig. 4, 5, 6 and 7):

1. A/C full air (CB1) 200 A - 24 volts;
2. Front junction box (CB7) 90 A - 24 volts;
3. Rear junction box (CB6) 90 A - 24 volts;
4. Direct (CB4) 90 A - 12 volts;
5. Rear junction box (CB3) 70 A - 12 volts;
6. Condenser fan motor L.H. (CB8) 40 A - 24 volts;
7. Evaporator fan motor (CB9) 120 A - 24 volts;
8. Condenser fan motor R.H. (CB11)40 A - 24 volts.

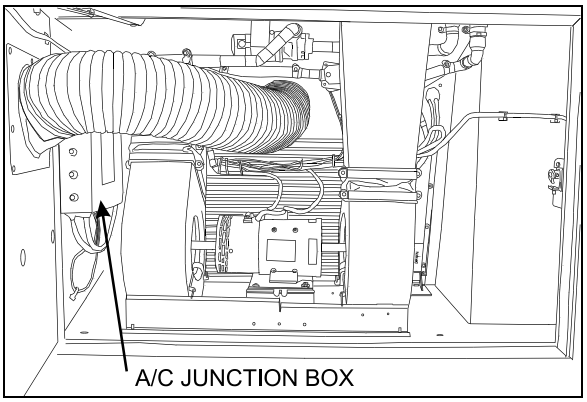

FIGURE 5: LOCATION OF A/C JUNCTION BOX IN EVAPORATOR COMPARTMENT 22244B

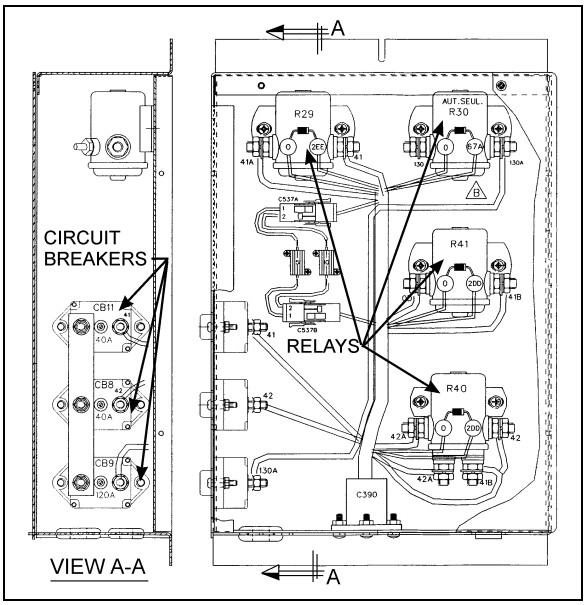

FIGURE 6: A/C JUNCTION BOX 06317

2.6 FRONT SERVICE COMPARTMENT

The front service compartment is located on L.H. side of vehicle, under the driver's window. It

contains the following components (Fig. 7 and 8):

- relays;
- breakers;
- alternator module
- diodes;
- World Transmission ECU;
- Electronic control unit for ABS.

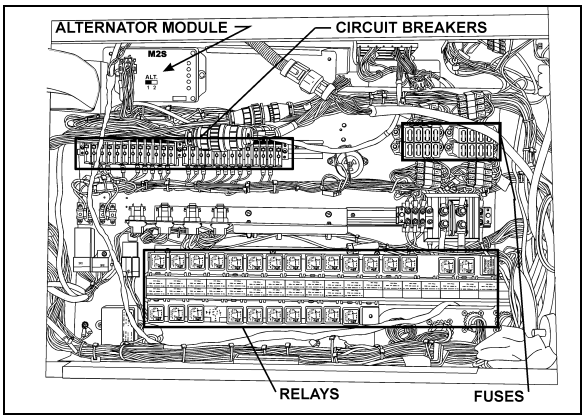

FIGURE 7: TOP SECTION OF FRONT SERVICE COMPARTMENT 06319

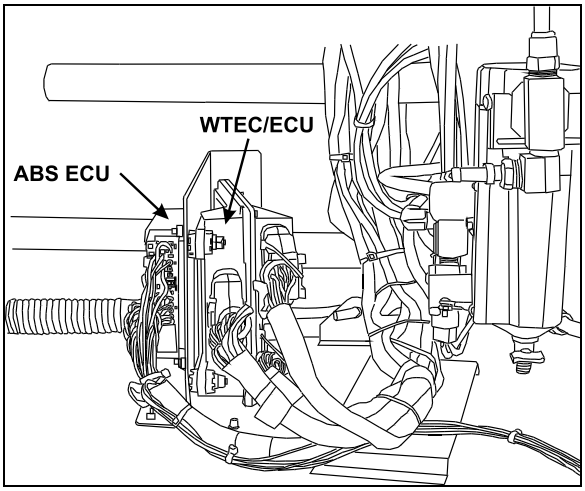

FIGURE 8: BOTTOM SECTION OF FRONT SERVICE COMPARTMENT 06394

DDR connector

To enhance troubleshooting and to allow interrogation of the ECU for valuable service information, a DDR (diagnostic data reader) can be used. To use it, plug the appropriate connector (not furnished by the manufacturer) in the terminal located in the rear junction box or the connector located on L.H. console (refer to fig. 9 and 11). You can also use your push-button shifter to perform certain maintenance operations (see Section 01, Engine, under paragraph "4. DDEC V Diagnostic codes").

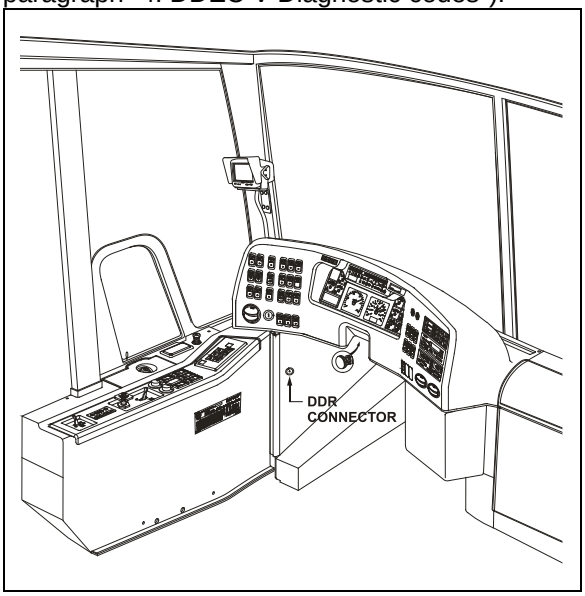

FIGURE 9: DDR CONNECTOR LOCATION IN DRIVER'S AREA 18558

2.6.1 L.H. Side of Front Baggage Compartment (Vehicle Equipped With Video System)

This compartment may contain the following components:

- protective screen (with video system);
- video inverter (with video system);
- Electronic system monitor.

Battery Equalizers

On XL2-45 coach the battery equalizers are located in the main power compartment (Fig. 4).

2.7 ENGINE COMPARTMENT (REAR JUNCTION BOX)

The rear junction box is located in the engine compartment. Switches are located on R.H. side of rear junction box (Fig.10):

- engine compartment light switch;
- starter selector switch;
- Rear start (push button switch).

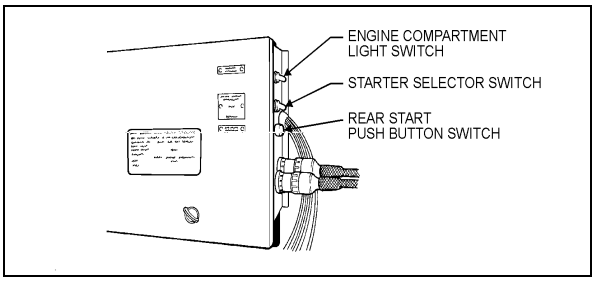

FIGURE 10: REAR JUNCTION BOX SWITCHES 01017

The rear junction box contains the following components (Fig. 11):

- relays;
- breakers;
- diodes;
- time delay relay;
- DDR connector.

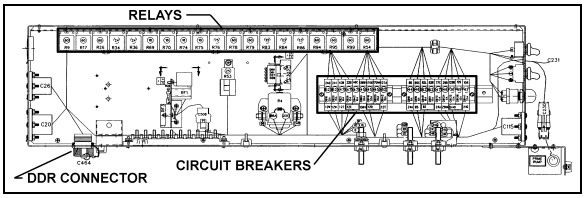

FIGURE 11: REAR JUNCTION BOX 06318

3. XL2 MOTORHOMES ELECTRICAL COMPARTMENTS AND JUNCTION BOXES

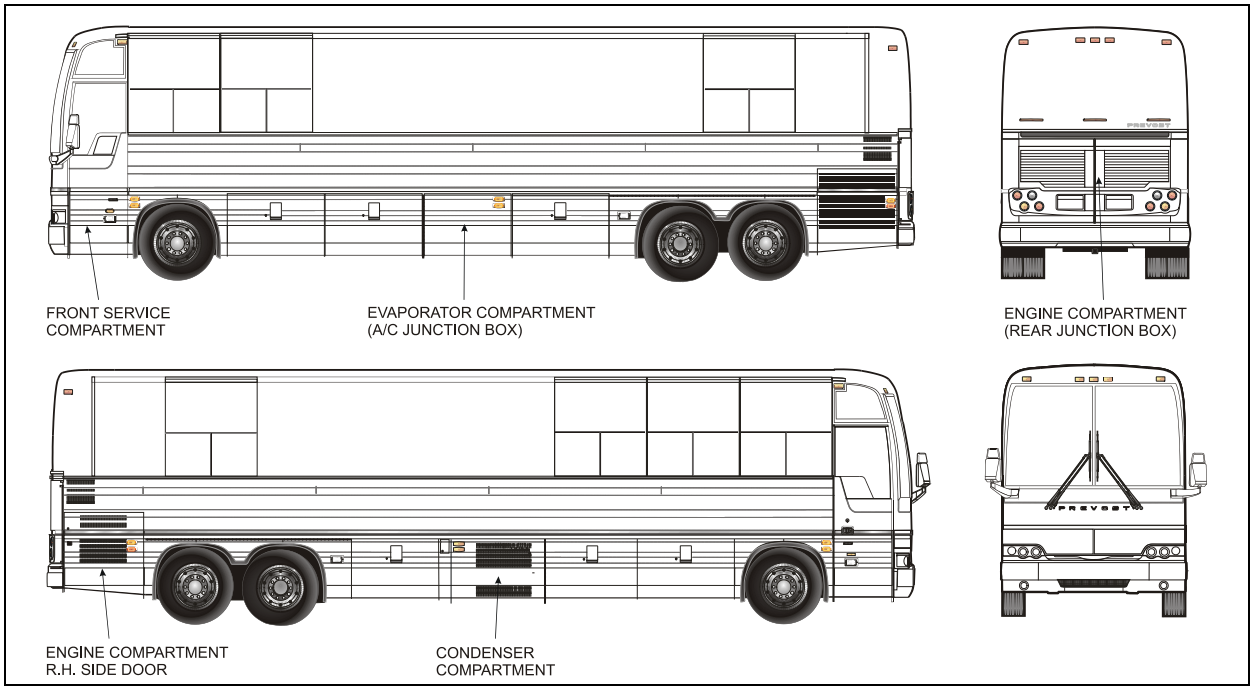

FIGURE 12: ELECTRICAL COMPARTMENTS (XL2-40 BUS SHELLS)
06543

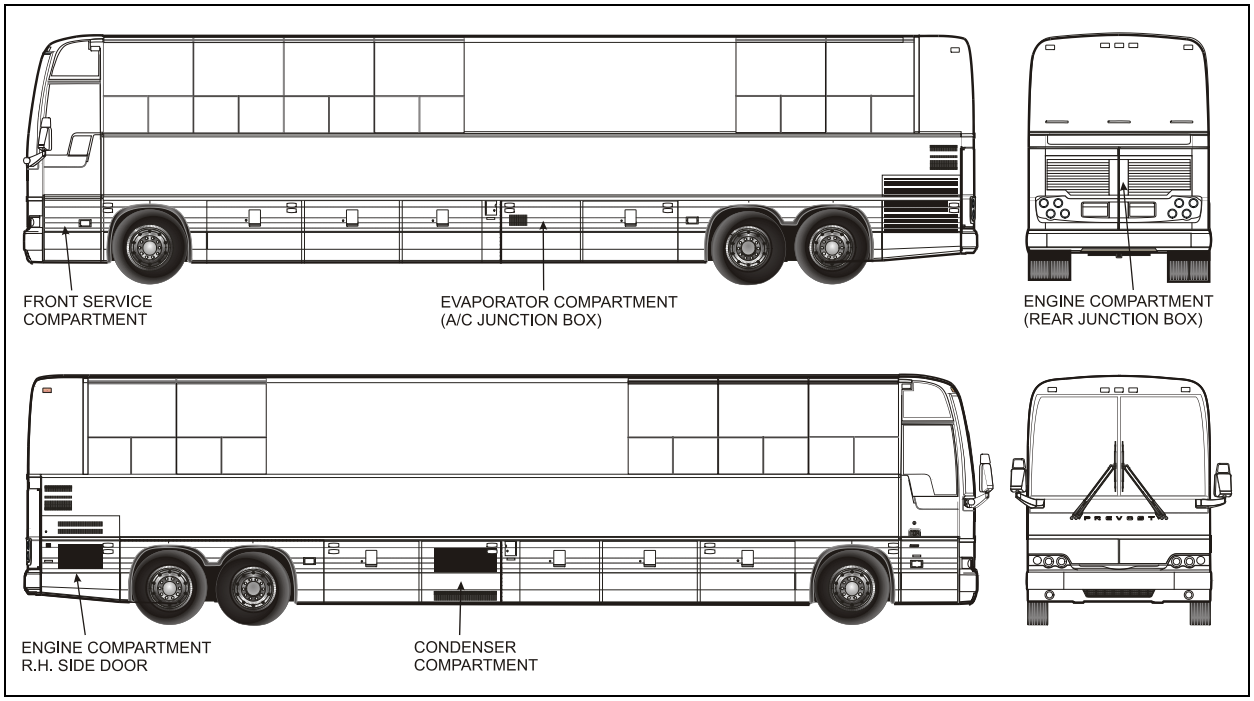

FIGURE 13: ELECTRICAL COMPARTMENTS (XL2-45E BUS SHELLS) 06545

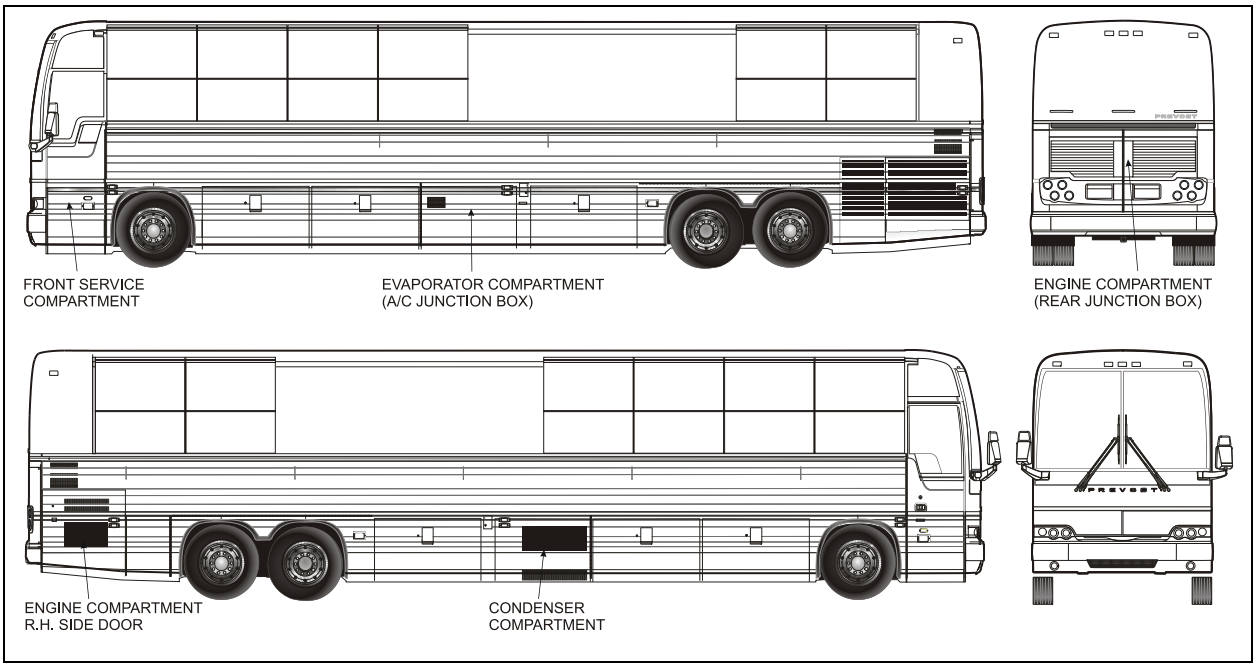

FIGURE 14: ELECTRICAL COMPARTMENTS (XL2-45 BUS SHELLS) 06542

3.1 MAINTENANCE

A Cortec VCI-238 corrosion inhibitor has been sprayed in all electrical compartments to protect components from corrosion. The life expectancy of this product is five years, so it is recommended to reapply it every five years. It is also recommended to spray it on new components when added or replaced.

⚠ WARNING ⚠

Use VIC-238 in a well ventilated area. Do not smoke. Avoid prolonged contact with skin and breathing of spray mist. Harmful or fatal if swallowed. Do not induce vomiting. Call physician immediately.

3.2 BOOSTER BLOCK

On all XL2 MTH, booster block is located on the breaker panel in the engine compartment on the R.H. side and is accessible through engine R.H. side door (Fig. 15).

3.3 BATTERY SAFETY SWITCH

This switch disconnects both the 12 and 24 volts. This toggle switch is located on the breaker panel in the engine compartment on the R.H. side and is accessible through engine R.H. side door (Fig. 15).

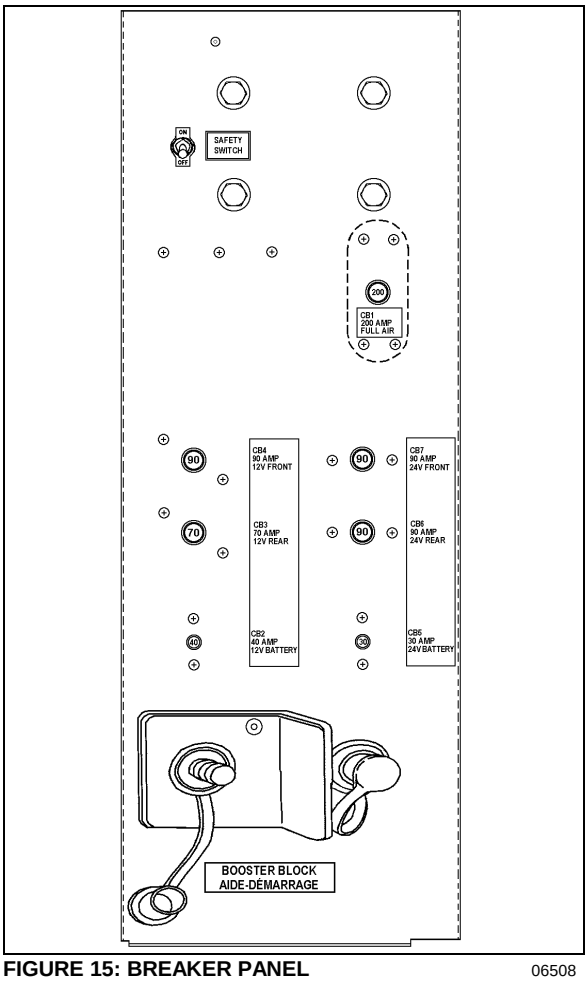

FIGURE 15: BREAKER PANEL 06508

⚠ CAUTION ⚠

During repair or maintenance periods, set battery safety switch to the "OFF" position in order to avoid personal injury. This ensures that power is cut off even if master key switch is set to the "ON" position by mistake. When master key switch is set to the "OFF" position, electrical supply from the batteries is automatically cut off.

NOTE

When battery safety switch or master key switch is set to the "OFF" position, the electrical supply from the batteries is cut off, with the exception of the Fire Detection System, the Engine & Transmission Electronic Controls, the Auxiliary Heating System, the Battery Equalizers and the Digital Clock.

3.4 BATTERIES

The batteries are located in the engine compartment R.H. side (Fig. 16). The battery arrangement may differ between vehicle types due to available space.

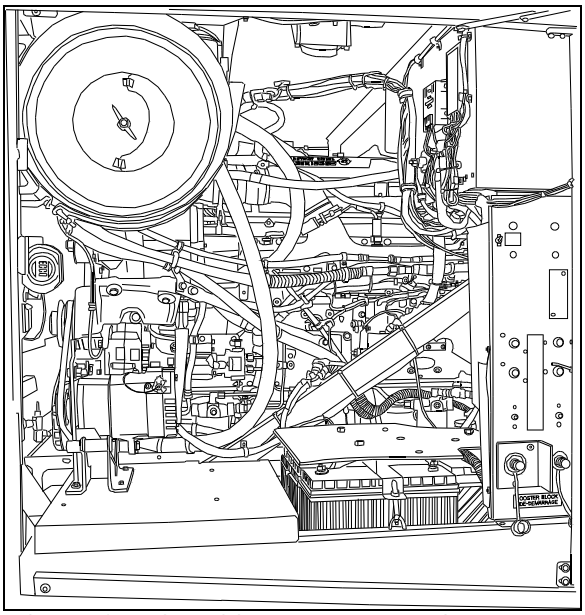

FIGURE 16: ENGINE COMPARTMENT R.H. SIDE 18513

Electric Circuit Protection

Two types of cutoff mechanisms are installed to protect the vehicle's electrical system; fuses and manually-resettable circuit breakers. If an electrical device is inoperative, check the corresponding cutoff mechanism.

⚠ CAUTION ⚠

Never replace a fuse with a higher rated one because it will cause severe damage to the electric system.

3.5 CIRCUIT BREAKERS

Most of the manually-resettable circuit breakers are located in the: A/C junction box, rear junction box, front service compartment and in the engine compartment R.H. side. An identification decal is affixed on the inside face of each door.

MTH XL2-40, XL2-45E and XL2-45 may be equipped with ten (10) main breakers; six (6) of which are standard and four (4) are supplied only on vehicles equipped with central A/C system. CB2 to CB7 breakers are standard and CB1, CB8, CB9 and CB11 breakers are optional.

On all vehicles, breakers CB1 to CB7 are installed on breaker panel in engine compartment R.H. side (Fig. 15 & 16). They are accessible through engine R.H. side door and can be identified as follows:

1. A/C full air (CB1) 200 A - 24 volts;
2. Front junction box (CB7) 90 A - 24 volts;
3. Rear junction box (CB6) 90 A - 24 volts;
4. Direct (CB4) 90 A - 12 volts;
5. Rear junction box (CB3) 70 A - 12 volts;
6. Battery CB2) 40 A - 12 volts;
7. Battery (CB5) 30 A - 24 volts;

On all vehicles equipped with central A/C, breakers CB8, CB9 and CB11 are installed in the A/C junction box in the evaporator compartment (Fig. 17 and 18), and are identified as follows:

1. Condenser fan motor L.H. (CB8) 40 A - 24 volts;
2. Evaporator fan motor (CB9) 120 A - 24 volts;
3. Condenser fan motor R.H. (CB11)40 A - 24 volts.

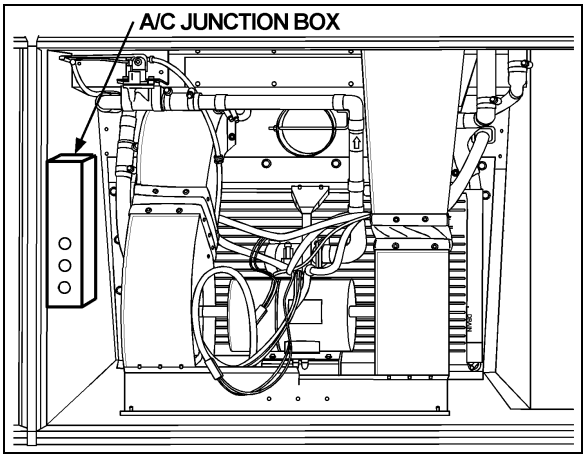

FIGURE 17: LOCATION OF A/C JUNCTION BOX IN EVAPORATOR COMPARTMENT
22178F

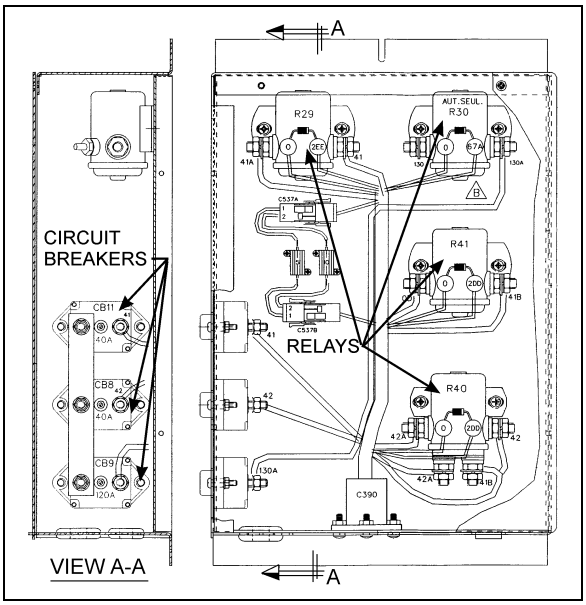

FIGURE 18: A/C JUNCTION BOX 06317

3.6 FRONT SERVICE COMPARTMENT

The front service compartment is located on L.H. side of vehicle, under the driver's window. It contains the following components (Fig. 19 and 20):

- relays;
- breakers;
- alternator module
- diodes;
- World Transmission ECU;
- Electronic control unit for ABS.

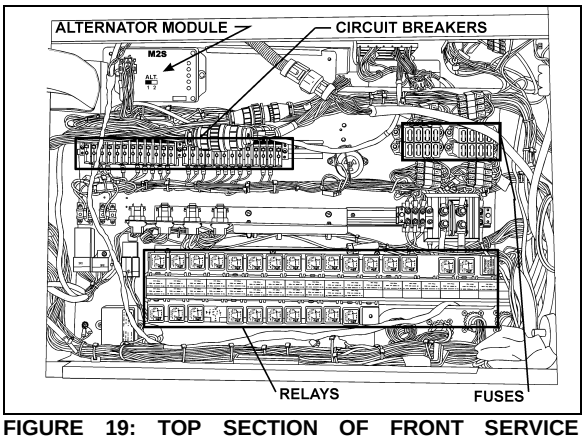

FIGURE 19: TOP SECTION OF FRONT SERVICE COMPARTMENT 06319

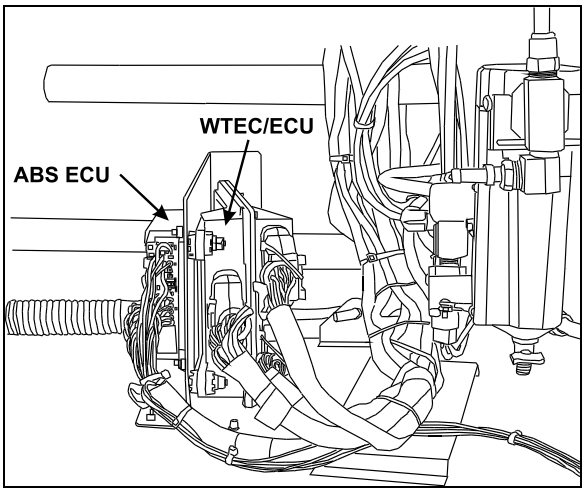

FIGURE 20: BOTTOM SECTION OF FRONT SERVICE COMPARTMENT 06394

DDR connector

To enhance troubleshooting and to allow interrogation of the ECU for valuable service information, a DDR (diagnostic data reader) can be used. To use it, plug the appropriate connector (not furnished by the manufacturer) in the terminal located in the rear junction box or the connector located on L.H. console (refer to fig. 21 and 23). You can also use your push-button shifter to perform certain maintenance operations (see Section 01, Engine, under paragraph "4. DDEC V Diagnostic codes").

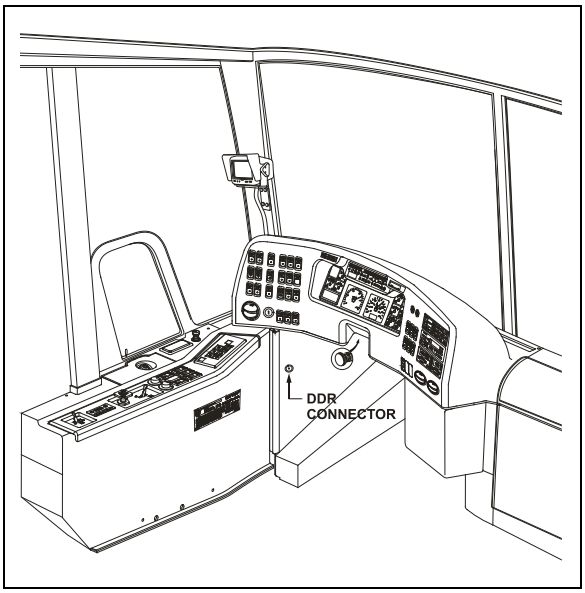

FIGURE 21: DDR CONNECTOR LOCATION IN DRIVER'S AREA 18558

3.7 ENGINE COMPARTMENT (REAR JUNCTION BOX)

The rear junction box is located in the engine compartment. Switches are located on R.H. side of rear junction box (Fig.22):

- engine compartment light switch;
- starter selector switch;
- Rear start (push button switch).

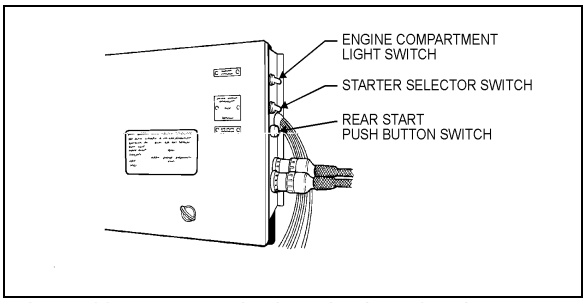

FIGURE 22: REAR JUNCTION BOX SWITCHES 01017

The rear junction box contains the following components (Fig. 23):

- relays;
- breakers;
- diodes;
- time delay relay;
- DDR connector.

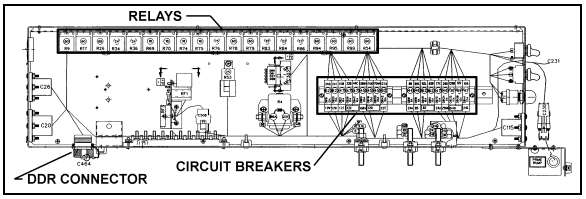

FIGURE 23: REAR JUNCTION BOX 06318

4. BATTERIES

The vehicle is provided with four (4) maintenance-free 12 volt heavy-duty batteries connected in series-parallel (Fig. 24). The top-mounted negative and positive terminals are tightly sealed to prevent leaks. Water never needs to be added to this type of battery. There are no filler caps in the cover. The battery is sealed, except for small vent holes in the cover. The vents must not be restricted as they allow small amounts of gases produced in the battery to escape. The special chemical composition inside the battery reduces gassing to a very small amount at normal charging voltages. Besides reducing gassing, the special chemistry greatly reduces the possibility of overcharge damage.

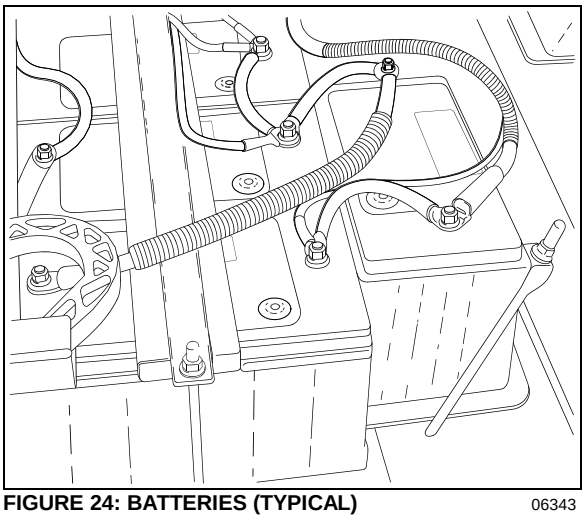

FIGURE 24: BATTERIES (TYPICAL) 06343

The vents require keeping the battery in an upright position to prevent electrolyte leakage. Tipping the battery beyond a 45° angle in any direction can allow a small amount of electrolyte to leak out of the vent holes.

⚠ WARNING ⚠

DO NOT tip battery by more than 45° when carrying or installing the battery.

NOTE

Evidence of electrolyte leakage does not necessarily mean the battery is defective.

With special cables properly attached to batteries, the metal surfaces that carry the current are completely sealed from the atmosphere. This prevents terminal oxidation and corrosion that may cause starting and charging problems. If new cables are required, sealed terminal cable replacements should be used to retain the reliability of the original maintenance-free connections.

⚠ WARNING ⚠

All lead-acid batteries generate hydrogen gas, which is highly flammable. If ignited by a spark or flame, the gas may explode violently, causing spraying of acid, fragmentation of the battery, which may result in severe personal injuries. Wear safety glasses and do not smoke when working near batteries. In case of contact with acid, flush immediately with water.

The battery has four (4) major functions:

1. Providing a source of current for starting the engine;

2. Stabilizing the voltage in the electrical system;
3. Supplying current for a limited time, when electrical demands of the equipment exceed the power output of the alternator;
4. Providing a limited source of power for connected accessories, when the engine is not running.

4.1 BATTERY REMOVAL AND INSTALLATION

4.1.1 XL2-45 Coach

The batteries are located in the main power compartment.

1. Remove the two screws at the bottom of the plastic protective cover, and then unscrew the two quarter turn nuts to remove the protective cover (Fig. 4)

⚠ WARNING ⚠

To prevent possible electric shocks or sparking, the battery master switch should be in the "Off" position before disconnecting cables from the batteries (see paragraph "2.3 Battery master switch").

2. Remove the supports, and unscrew terminal nuts of each defective battery.
3. Remove battery cables from the batteries.
4. Remove batteries.
5. Installation is the reverse of removal.

NOTE

When the battery cables have been removed from the batteries, wrap the battery terminals and cable ends with electric tape to prevent accidental grounding. The ground cables should always be disconnected first and replaced last.

NOTE

In replacing batteries, only batteries of the same specification should be used. Refer to "Specifications" at the end of this section for further details.

⚠ CAUTION ⚠

Ensure that connections are not reversed when reinstalling batteries, since damage to electrical system components will result.

When reinstalling batteries, battery connections must be tightened to 13-15 lbf-ft (18-20) Nm) and the nut on top of sliding tray to 45-55 lbf-in (5-6 Nm). A torque wrench is required to ensure an accurate tightening torque.

⚠ WARNING ⚠

To prevent possible electric shock or sparking, the battery master switch must be set to the "Off" position before tightening an electrical connection.

NOTE

A protective silicone free, coating should be applied on all terminals that have been disconnected. We recommend the use of Cortec VCI-238 (Prévost #682460) on all electrical connections.

4.1.2 XL2-40, XL2-45E and XL2 45 Bus Shells

The batteries are located in the engine compartment R.H. side (Fig. 16).

1. Remove the tree (3) plastic protective cover retaining bolts. Remove the plastic protective cover.
2. Remove the support retaining bolt.

⚠ WARNING ⚠

To prevent possible electric shocks or sparking, the 12 and 24 volts battery master switch should be in the "Off" position before disconnecting cables from the batteries (see paragraph "3.3 Battery Master Switch").

3. Remove the support (if necessary, remove battery cables). To remove battery cables, unscrew terminal nuts and remove cables.
4. Remove battery cables from defective batteries.

NOTE

When the battery cables have been removed from the batteries, wrap the battery terminals and cable ends with electric tape to prevent accidental grounding. The ground cables should always be disconnected first and replaced last.

5. Remove defective batteries.
6. Installation is the reverse of removal.

NOTE

In replacing batteries, only batteries of the same specification should be used. Refer to "Specifications" at the end of this section for further details.

⚠ CAUTION ⚠

Ensure that connections are not reversed

when reinstalling batteries, since damage to electrical system components will result.

When reinstalling batteries, battery connections must be tightened to 13-15 lbf-ft (18-20) Nm) and the nut on top of sliding tray to 45-55 lbf-in (5-6 Nm). A torque wrench is required to ensure an accurate tightening torque.

⚠ WARNING ⚠

To prevent possible electric shock or sparking, the battery master switch must be set to the "Off" position before tightening an electrical connection.

NOTE

A protective silicone free, coating should be applied on all terminals that have been disconnected. We recommend the use of Cortec VCI-238 (Prévost #682460) on all electrical connections.

4.2 BATTERY RATING

Each of the 12 volt batteries used on the vehicle has the following rating:

- Reserve capacity: 195 minutes
- Cold cranking (amps): 950 @ 0°F (-18°C)
- Cold cranking (amps): 745 @ -20°F (-29°C)
- Weight (filled): 59 lb (26,7 kg)

The reserve capacity is defined as the number of minutes a new, fully charged battery at 80°F (26,6°C) can be discharged at 25 amperes and maintain a minimum of 1.75 volts per cell (10.5 volts total for one 12 volts battery). This rating can be used as a basis for determining how long a vehicle might run after an alternator failure. The cold cranking rating is defined as the minimum discharge current a battery will deliver in amperes for 30 seconds at 0°F (-18°C) while maintaining a minimum of 1.2 volts per cell (7.2 volts total for one 12 volts battery). This rating can be used as a basis for comparing starting performance.

4.3 BATTERY TESTING

The maintenance-free battery has a strong ability to withstand the damaging effects of overcharge. The test indicator in the cover is used only to determine if the battery can be tested in case of a cranking problem.
The test indicator in the battery cover is to be used with accepted diagnostic procedures only. It must not be used to determine if the battery is good or bad, charged or discharged. The test indicator is a built-in hydrometer in one cell that provides visual information for battery testing (Fig. 25).
It is important when observing the test indicator, that the battery be relatively level and has a clean indicator top to see the correct indication. Some lighting may be required in poorly lit areas. Under normal operation, two indications can be observed.

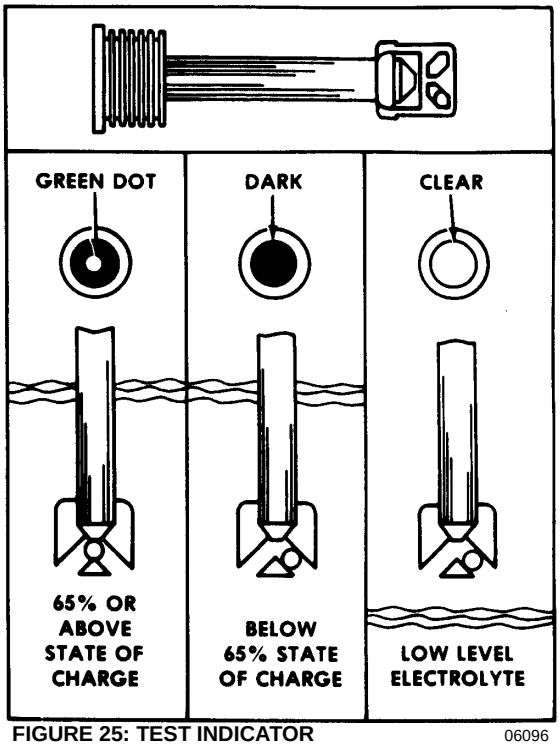

FIGURE 25: TEST INDICATOR 06096

Green Dot Visible

Any green appearance is interpreted as a *"green dot"*, and the battery is ready for testing. On rare occasions, following prolonged cranking, the green dot may still be visible when the battery is obviously discharged. Should this occur, charge the battery as described under *"Charging Procedure"* in *"Battery Charging"* later in this section.

Dark - Green Dot Not Visible

If there is difficulty cranking the engine, the battery should be tested as described in this section. On rare occasions, the test indicator may turn light yellow. In this case, the integral charging system should be checked. Normally, the battery is capable of further service; however, if difficult start has been reported, replace the battery. **DO NOT CHARGE, TEST, OR JUMP-START.**

4.3.1 Visual Inspection

1. Check the outside of the battery for a broken or cracked cover or case that could permit loss of electrolyte. If obvious physical damage is noted, replace the battery.
2. Check for loose terminal posts, cable connections, damaged cables, and for evidence of corrosion. Correct conditions as required before proceeding with tests.

4.3.2 Removing Surface Charge

Disconnect cables from the battery and attach alligator clamps to the contact lead pad on the battery as shown in figure 27. Connect a 300 ampere load across the terminal for 15 seconds to remove surface charge from the battery.

4.3.3 Load Test

This test is one means of checking the battery to determine its ability to function as required in the vehicle.
To make this test, use test equipment that will withstand a heavy electrical load from the battery, such as a carbon pile resistor or other suitable means.

1. Connect a voltmeter, ammeter, and a variable load resistance as illustrated in figure 26.

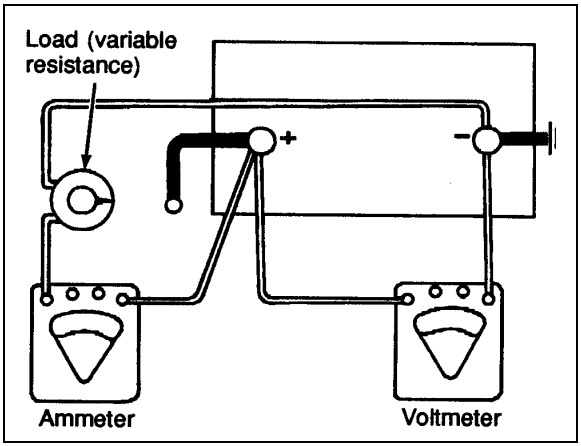

FIGURE 26: LOAD TEST 06064

⚠ CAUTION ⚠

Observe polarity of the meters and the battery when making connections, and select the correct meter range.

2. Apply a 290 amperes load to the battery for 15 seconds.
3. With an ammeter reading specified load, read voltage. The voltage should be at least 9.6 volts. Disconnect the load. If the voltmeter indicates 9.6 volts or more, the battery is good. If the voltmeter reading is less than 9.6 volts, replace the battery. This voltage is to be used for battery ambient temperatures of 70ºF (21ºC) and above. For temperatures below 70ºF (21ºC), refer to the following *"Voltage and Temperature Chart"*.

Voltage and Temperature Chart

Ambient Temperature	Minimum Voltage
70ºF (21ºC) and above	9.6
60ºF (16ºC)	9.5
50ºF (10ºC)	9.4
40ºF (4ºC)	9.3
30ºF (-1ºC)	9.1
20ºF (-7ºC)	8.9
10ºF (-12ºC)	8.7
0ºF (-18ºC)	8.5

NOTE

The accuracy of this test procedure is dependent upon close adherence to the proper load, time and temperature specifications.

4.3.4 Testing Battery Cables

Check all cable ring terminals and connections to determine if they are in good condition. Excessive resistance, generally caused by poor connections, produces an abnormal voltage drop which may lower voltage at the starter to such a low value that normal operation of the starter will not be obtained. An abnormal voltage drop can be detected with a low-reading voltmeter as follows:

⚠ WARNING ⚠

To prevent the engine from starting, the DDEC engine circuits, which are protected by breakers (CB-19, CB-20 and CB-21) located in the rear junction box, must be deenergized during these tests; afterward, depress black button to close circuit.

1. Check voltage drop between grounded (negative) battery terminal and vehicle frame by placing one prod of the voltmeter on the battery terminal and the other on a good ground (unpainted surface) on the vehicle. With the starter cranking the engine at a temperature of 70ºF (21ºC), voltage reading should be less than 0.3 volt. If the voltage reading exceeds 0.3 volt, there is excessive resistance in this circuit.
2. Check voltage drop between the positive battery terminal and the starter positive

terminal stud while the motor is operated. If the reading is more than 2.5 volts, there is excessive resistance in this circuit.

NOTE

If it is necessary to extend the voltmeter lead for this test, use a #16 (AWG) or larger wire.

3. Check voltage drop between the starter housing and a good ground on the vehicle. The reading should be less than 0.2 volt.

⚠ WARNING ⚠

Any procedure other than the following could cause personal injury or damages to the charging system resulting from battery explosion or electrical burns.

Wear adequate eye protection when working on or near the batteries. Ensure that metal tools or jumper cables do not contact the positive battery terminal (or a metal surface in contact with it) as a short circuit will result. Do not attempt to jump start a vehicle suspected of having a frozen battery because the battery may rupture or explode. Both the booster and discharged batteries must be treated carefully when using jumper cables. Follow exactly the procedure outlined later in this section, being careful not to cause sparks.

4.4 BATTERY CHARGING

⚠ WARNING ⚠

During charging of the batteries, an explosive gas mixture forms in each cell. Part of this gas escapes through the vent holes and may form an explosive atmosphere around the battery itself if ventilation is poor. This explosive gas may remain in or around the battery for several hours after it has been charged. Sparks or flames can ignite this gas causing an internal explosion, which may shatter the battery.

1. **Do not smoke near a battery which is being charged or which has been recently charged.**
2. **Do not break live circuits at battery terminals because a spark usually occurs at the point where a live circuit is broken. Care must always be taken when connecting or disconnecting booster leads or cable clamps on chargers. Poor connections are a common cause of electric arcs, which cause explosions.**
3. **The electrical system on this vehicle is negative ground. Installing the batteries with the positive terminals grounded or incorrect use of the booster battery and jumper cables will result in serious damage to the alternator, batteries and battery cables.**

The batteries used on this vehicle can be charged either on or off the vehicle; however, when they are removed from the vehicle, it is recommended that an adapter kit, which is available from any "A/C DELCO" dealer, be used in charging sealed-terminal batteries. Use the booster block to charge the batteries when they are left on vehicle and **make sure that the main battery disconnect switch is set to the *"On"* position.**

The alligator clamps of the tester or charger must be placed between the terminal nuts and the lead pads of the terminal studs (Fig. 27) after the vehicle cables are detached. The alligator clamps should make firm contact with the lead pads.

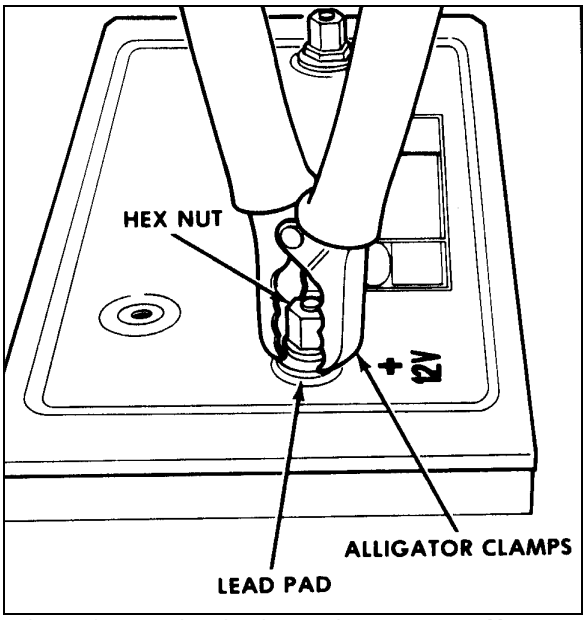

FIGURE 27: ALLIGATOR CLAMPS AND BATTERY 06065

NOTE

If this connection cannot be made because of the alligator clamp design, the load value for testing must be reduced from 290 to 260 amperes.

On rare occasions, such as those that occur following prolonged cranking, the green dot in the test indicator may still be visible when the battery is obviously discharged. Should this occur, a boost charge of 20 amperes-hour is

recommended. Under normal operating conditions, do not charge battery if the green dot is visible. The battery should never be charged if the test indicator (hydrometer) is clear or light yellow. If this occurs, replace the battery.

A charge rate between 3 and 50 amperes is generally satisfactory for any maintenance-free battery as long as spewing of electrolyte does not occur or the battery does not feel excessively hot (over 125ºF (52ºC)). If spewing or violent gassing of electrolyte occurs or battery temperature exceeds 125ºF (52ºC), the charging rate must be reduced or temporarily stopped to allow cooling and to avoid damaging the battery. Battery temperature can be estimated by touching or feeling the battery case. The battery is sufficiently charged when the green dot in the built-in hydrometer is visible. No further charging is required. Shake or tilt the battery at hourly intervals during charging to mix the electrolyte and see if the green dot appears.

⚠ WARNING ⚠

Always turn off the charger before connecting or disconnecting to a battery.

NOTE

The charge rate must be doubled when the batteries are charged by the booster block, because of the series-parallel circuit.

Battery charging consists of a charge current in amperes for a period of time in hours. Thus, a 25 ampere charging rate for 2 hours would be a 50 ampere-hour charge to the battery. Most batteries, whose load test values are greater than 200 amperes, will have the green dot visible after at least a 75 ampere-hour charge. In the event that the green dot does not appear, replace the battery.

4.4.1 Battery Charging Guide

Fast Charging Rate
20 amps @ 3-¾ hours
30 amps @ 2-½ hours
40 amps @ 2 hours
50 amps @ 1-½ hours

Slow Charging Rate
5 amps @ 15 hours
10 amps @ 7-½ hours
The time required for a charge will vary according to the following factors:

Size of Battery
For example, a completely discharged large heavy-duty battery requires more than twice the recharging time of a completely discharged small passenger car battery.

Temperature
For example, a longer time will be needed to charge any battery at 0°F (-18°C) than at 80°F (27°C). When a fast charger is connected to a cold battery, the current accepted by the battery will be very low at first, and then in time, the battery will accept a higher rate as it warms.

State of Charge
For example, a completely discharged battery requires more than twice as much charge than a half-charged battery. Since the electrolyte is nearly pure water and a poor conductor in a completely discharged battery, the current accepted is very low at first. Later, as the charging current causes the electrolyte acid content to increase, the charging current will likewise increase.

Charger Capacity
For example, a charger which can supply only 5 amperes will require a much longer period of charging than a charger that can supply 30 amperes or more.

4.4.2 Emergency Jump Starting With Auxiliary (Booster) Battery.

⚠ WARNING ⚠

Do not jump start vehicles equipped with maintenance-free batteries if the test indicator is light yellow.

Both booster and discharged batteries should be treated carefully when using jumper cables. A vehicle with a discharged battery may be started by using energy from a booster battery or the battery from another vehicle.

⚠ WARNING ⚠

Jump starting may be dangerous and should be attempted only if the following conditions are met:

The booster battery or the battery in the other vehicle must be of the same voltage as the battery in the vehicle being started, and must be negative grounded.

If the booster battery is a sealed-type battery without filler openings or caps, its test indicator must be dark or a green dot must be visible. Do not attempt jump starting if the test indicator of the booster battery or the discharged battery has a light or bright center.

⚠ WARNING ⚠

Follow the procedure exactly as outlined hereafter. Avoid making sparks.

1. Wear eye protection and remove rings, watches with metal bands and other metal jewelry.
2. Apply parking brake and place the transmission shift lever or push-button pads in Neutral (N) position in both vehicles. Turn off lights, heater and other electrical loads. Observe the charge indicator. If the indicator in the discharged battery is illuminated, replace the battery. **Do not** attempt jump starting when indicator is illuminated. If the test indicator is dark and has a green dot in the center, failure to start is not due to a discharged battery and the cranking system should be checked. If charge indicator is dark but the green dot does not appear in center, proceed as follows:
3. Connect one end of one red jumper cable to the positive (+) terminal of the booster power source and the other end to the positive (+) post of the booster power block, located in the main power compartment or in the engine compartment R.H. side (refer to fig. 4 and 15).
4. Connect one end of the remaining negative jumper cable (black) to the negative (-) terminal of the booster power source, and the other end of the black jumper cable to the negative (-) post of the booster power block.
5. Make sure the clips from one cable do not inadvertently touch the clips on the other cable. Do not lean over the battery when making connections. The ground connection must provide good electrical conductivity and current carrying capacity.
6. Start the engine in the vehicle that is providing the jump start. Let the engine run for a few minutes, then start the engine in the vehicle that has the discharged batteries.
7. When removing the jumper cables, perform the above procedure exactly in reverse order, and replace protective caps on booster block terminals.

⚠ WARNING ⚠

Any procedure other than the above could result in personal injury, property damage due to battery explosion, or damage to the charging system of the booster vehicle or of the boosted vehicle.

NOTE

Jumper cables must withstand 500 cranking amperes. If cable length is 20 feet (6m) or less, use 2/0 (AWG) gauge wires. If cable length is between 20-30 feet (6-9m), use 3/0 (AWG) wires.

4.5 CLEANING AND INSPECTION

The external condition of the battery and the battery cables should be checked periodically. The top of the battery should be kept clean and the battery hold-down clamp bolts should be kept properly tightened. For best results when cleaning the battery, wash first with a diluted solution of ammonia or soda to neutralize any acid present then wash out with clean water. The battery hold-down bolts should be kept tight enough to prevent the batteries from moving, but they should not be tightened to the point that excessive strain is placed on the battery hold-down cover (proper tightening torque: 45-55 lbf-in (5-6 Nm).

To insure good contact, the battery cable ring terminals should be tight on the battery posts. If the posts or cable ring terminals are corroded, the cables should be disconnected and the posts and clamps cleaned separately with a soda solution and a wire brush. Install cable ring terminals on battery posts and tighten to a torque of 10-15 lbf-ft (13-20 Nm). Replace protective caps to prevent corrosion and sparks.

4.6 COMMON CAUSES OF BATTERY FAILURE

When a battery fails, the cause of failure may be related to something other than the battery. For this reason, when a battery failure occurs, do not be satisfied with merely recharging or replacing the battery. Locate and correct the cause of the failure to prevent recurrence. Some common external causes of battery failure are as follows:

1. A defect in charging system such as high resistance or a faulty alternator or regulator.
2. A malfunction within the 12 volts system (equalizer).
3. Overloads caused by a defective starter or excessive use of accessories.

4. Dirt and electrolyte on top of the batteries causing a constant drain.
5. Hardened battery plates, due to battery being in a low state of charge over a long period of time.
6. Shorted cells, loss of active material from plates.
7. Driving conditions or requirements under which the vehicle is driven for short periods of time.
8. A constant drain caused by a shorted circuit such as an exposed wire or water infiltration in junction boxes causing ground fault.
9. Extended operation of preheating system with engine not running.
10. Failing to close disconnect switches during the night.

4.7 TROUBLESHOOTING

If a battery is known to be good and then has not performed satisfactorily in service for no apparent reason, the following factors may reveal the cause of trouble:

1. Vehicle accessories and disconnect switches inadvertently left on overnight.
2. Defects in the charging system, such as high wiring resistance, faulty alternator, regulator or battery equalizer.
3. A vehicle electrical load exceeding the alternator (or battery equalizer) capacity, with the addition of electrical devices, such as CB radio equipment, a cellular phone or additional lighting systems.
4. Defects in the electrical system, such as shorted or pinched wires.
5. Extended driving at a slow speed while using many accessories.
6. Loose or poor battery cable-to-post connections, previous improper charging of a run-down battery, or loose hold-down clamp bolts.
7. High-resistance connections or defects in the cranking system.

5. ELECTRICAL SYSTEM MONITOR

This vehicle is equipped with an electronic device that monitors and detects abnormal alternator, voltage regulator, battery banks or battery equalizers conditions. The monitor is installed in the main power compartment (XL2-45) (refer to fig. 4), or in the engine compartment R.H. side (MTH). The *"Battery balance"* and *"Battery Hi/Lo"* warning lamps connected to this module are mounted in the dashboard (refer to *"Operator's Manual"* for location). If a malfunction should occur, the monitor sends a signal to the driver through the warning light of the malfunctioning component. If the *"Battery Hi/Lo"* warning light is illuminated, check the 24 volt voltmeter to determine if the battery voltage is too high or too low.

NOTE
According to the battery charging condition, it is normal that "Battery Hi/Lo" warning light illuminates upon starting the engine and stays illuminated for a few seconds. This is caused by the normal voltage drop of the battery during starting.

5.1 TELLTALE LIGHT DEFINITIONS

Battery Hi/Lo

Voltmeter drops below 24 V dc

- Check alternator output.
- Check voltage regulator.
- Check battery connections.
- Check battery cells.
- Check battery equalizer connections.

Voltmeter exceeds 30 V dc

- Check alternator output.
- Check voltage regulator.
- Check battery connections.

Battery Balance

NOTE
Allow at least 15 minutes to balance batteries after any corrective measure has been taken.

1. Batteries out of balance (difference greater than 1.5 volts between the two battery banks).
   - Check battery equalizer connections.
   - Check equalizer cables for proper gauge.
   - Check battery connections.
2. Demand for 12 volt power exceeding rated amperage output of battery equalizers causing batteries to go out of balance.

- Reduce 12 volt load or install additional battery equalizer(s).

"Battery" Warning Light

This warning light is not controlled by the electronic monitor, but by the "R" terminal of the alternator using the normally-closed contact of relay R-33. If a voltage drop should occur in the charging system, the *"Battery"* telltale light will immediately illuminate to warn the driver. The *"Battery Hi/Lo"* telltale light will illuminate if voltage drops below 24 V dc.

Refer to heading *"Diagnosis of Charging System Problems"* later in this section, to determine weather the alternator or the voltage regulator is defective. Should the *"Battery"* telltale light illuminate while the 24 volt voltmeter keeps on giving a normal reading and the *"Battery Hi/Lo"* telltale light does not illuminate, the relay R-33 or its wiring is probably defective.

⚠ CAUTION ⚠

Relay R-33 should never be replaced with a relay provided with a suppressor diode on its coil as the output current (between 12 and 14 volts) at the alternator "R" terminal is not rectified, thus rendering the relay inoperative.

NOTE

When the "Battery" warning light illuminates, the "A/C & Heating" system shuts off in order to prevent battery discharge.

6. BOSCH ALTERNATOR

One or two 24 volt 140 amp., self regulated, belt driven, air-cooled BOSCH alternators may be used in the 24 volt electrical system (instead of the DELCO 24 volt 270 amp. alternator).

Change the brushes and voltage regulator as per "Repair and Testing Instructions for T1 Alternator 0120 69 552" every 100,000 miles (160 000 fm) or once every two years, whichever comes first.

Replace bearings as per "Repair and Testing Instructions for T1 Alternator 0120 69 552" every 200,000 miles (320 000 fm) or once every four years, whichever comes first.

NOTE

Use Polyrex EM grease (684922) when repacking the bearings. Grease comes in 14.1 oz (400gr) cartridges.

Refer to Bosh T1 Alternator Maintenance Manual Annexed at the end of this section.

6.1 TWIN BOSCH ALTERNATORS INSTALLATION

If the alternators needed to be removed, reinstall as follows. Refer to figure 28 for installation and to figure 29 for tightening specifications:

1. Install alternator mounting bracket (1, figure 28) to the gear case. Use the four flanged phosphor alloy bolts on the pulley end of the bracket and the flanged nuts at the transmission end of the bracket;
2. Bolt the alternators to the bracket using the three inch bolt at the top of the upper alternator (2, fig 28) and flanged bolts at the other mounting bosses (3 and 4, figure 28). Tighten the bolts in the sliding sleeves (4, figure 28) last as they will adjust to prevent breaking the alternator mounting bosses upon final tightening. Repeat for the second alternator;
3. On the drive shafts of both alternators, install key, pulley, spring washer and nut. Tighten to 220 Lbf-ft (300 Nm);

NOTE

Final tightening of the pulleys can be performed once the belt is installed. This will help keep the pulley from turning when tightening.

4. Install the snubber bracket (5, fig. 28) using three flanged bolts. Do not tighten the adjustment bolts on the snubber until after final tightening;
5. Install the compressor belt idler pulley (6, fig. 28) as shown. A stud inserts into one of the mounting holes of the pulley assembly. Fasten this one using a nut and bolts for the other two.

7. DELCO ALTERNATOR

The 24 volt charging system consists of a belt driven, oil-cooled, brushless alternator, a 24 volt voltage regulator, an alternator relay and a 12 volt system that includes a 12 volt, 100 amp equalizer. The components used in this system are described under the applicable headings hereafter.

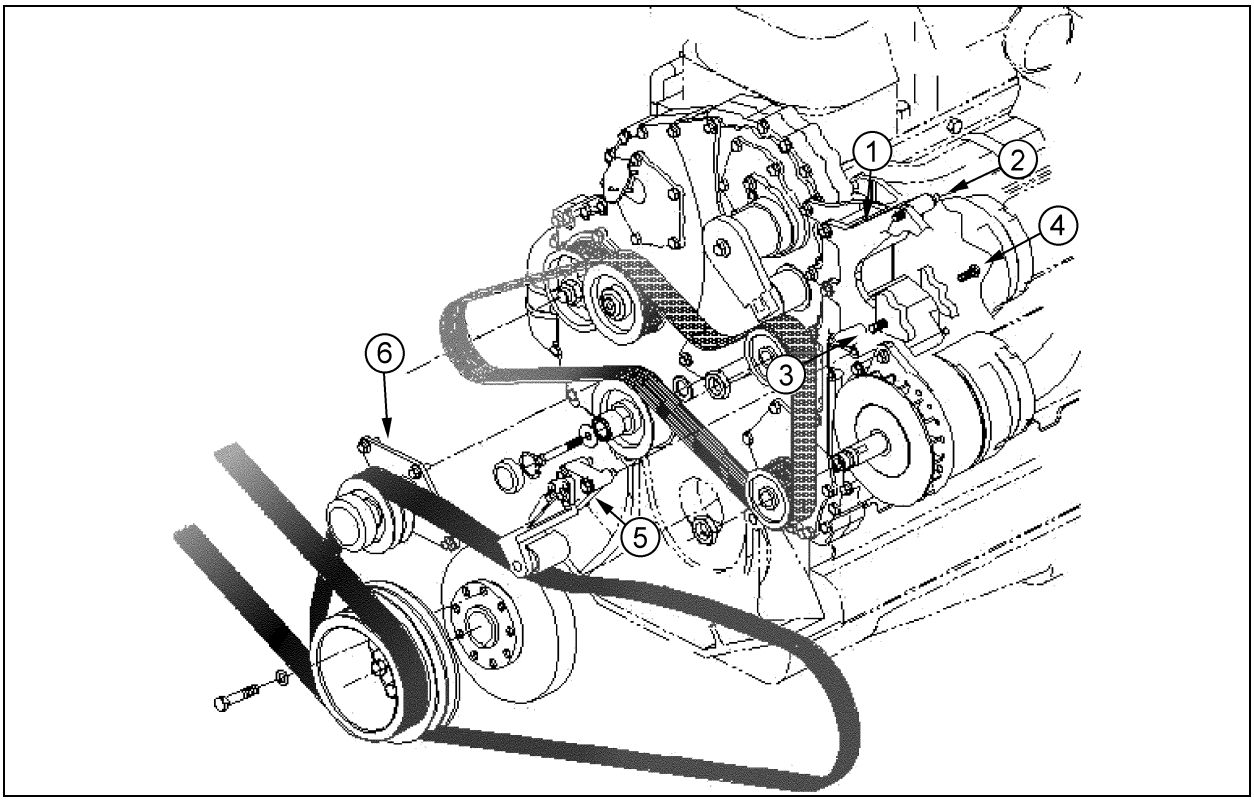

FIGURE 28: TWIN BOSCH ALTERNATORS INSTALLATION

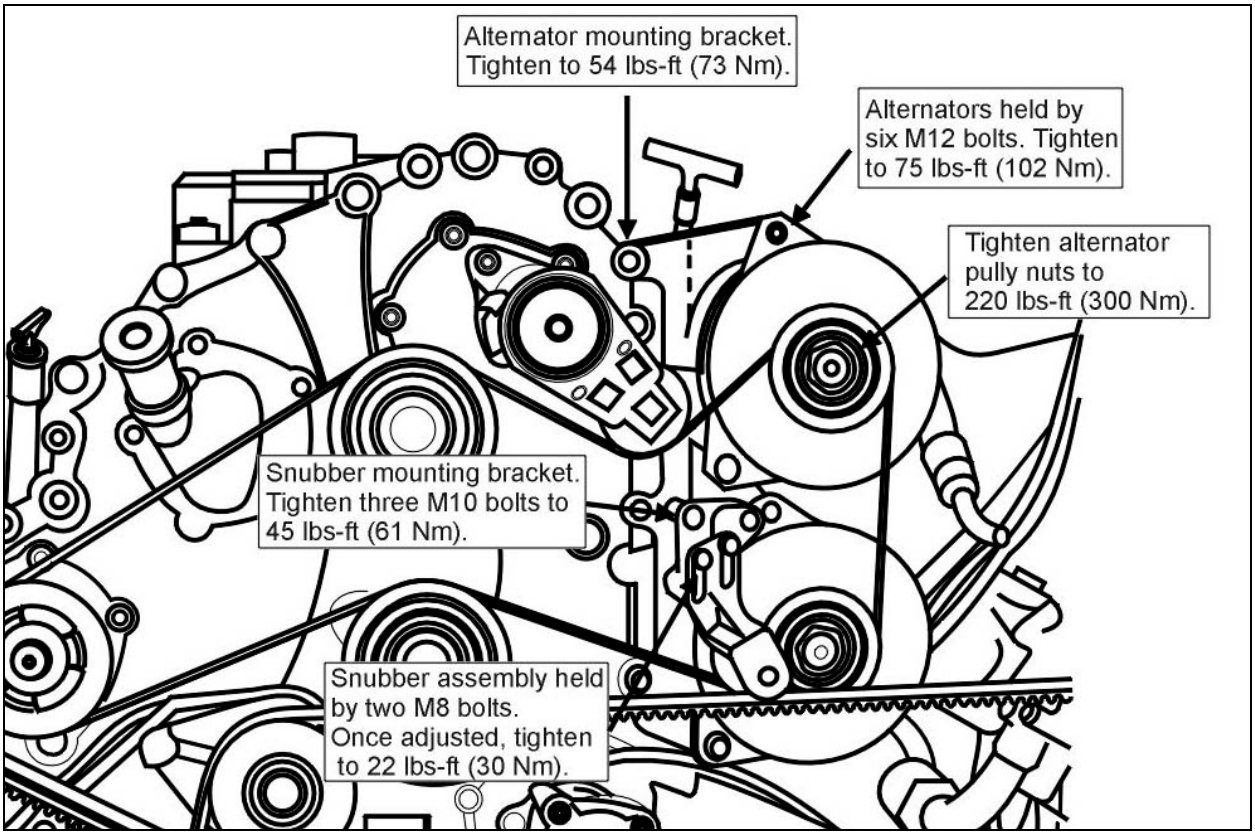

FIGURE 29: ALTERNATORS AND ACCESSORIES MOUNTING TORQUES

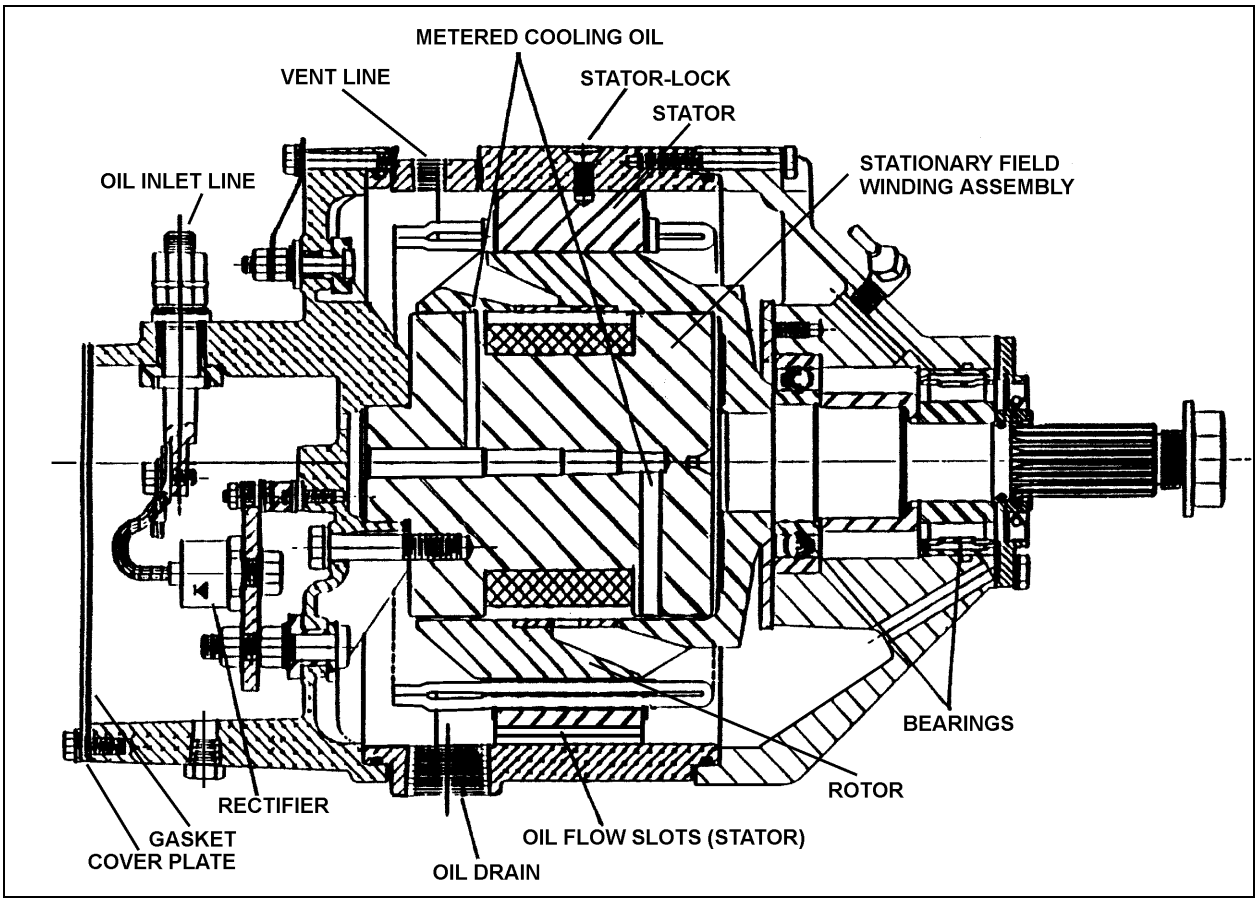

FIGURE 30: 50DN DELCO ALTERNATOR SECTIONAL VIEW 06493

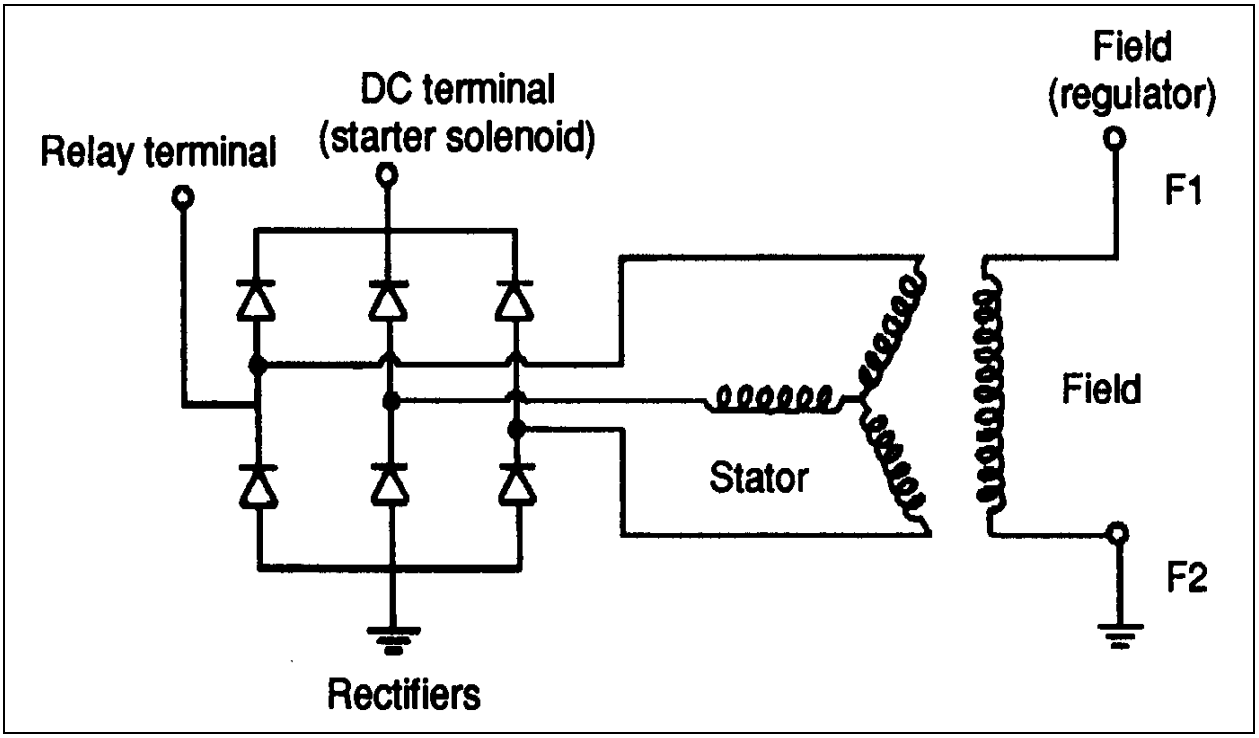

FIGURE 31: ALTERNATOR WIRING DIAGRAM (DELCO) 06067

This oil-cooled alternator is self rectifying. All current carrying members, windings, built-in diodes, and field coils are stationary. The only moving component is the rotor. The alternator is a totally-enclosed unit, cooled and lubricated by engine oil. The oil inlet is on the diode end cover. The oil drains back into the engine crankcase through the drive end frame and drive adapter housing.

This alternator should never be operated with the oil supply line disconnected. A continuous flow of engine oil through the alternator lubricates the bearings and cools the assembly. Four terminals are used on this alternator: the DC output terminal, two field terminals, and a 12 volt relay terminal. The alternator output voltage is regulated by a separate 24 volt regulator that controls the alternator field current (Fig. 30 and 31).

⚠ CAUTION ⚠

The electrical system is NEGATIVE GROUNDED. Connecting the batteries or a battery charger with the positive terminal grounded will endanger the alternator diodes and vehicle wiring by a high current flow. Burned wiring harnesses and burned "open" diodes will result. Always ensure that the alternator and battery polarities are matched prior to installation. THE ALTENATOR WILL NOT REVERSE TO ACCEPT INVERSE POLARITY. Also, do not ground or short across any of the alternator or regulator terminals.

⚠ CAUTION ⚠

Since there are no brushes, slip rings, or rubbing seals, the alternator requires no periodic maintenance other than the following:

1. **Check alternator-to-engine mounting bolts for looseness and tighten to the proper torque.**
2. **Check all electrical connections for tightness and corrosion. Clean and tighten connections as necessary. Be sure wiring insulation is in good condition and that all wiring is securely clipped to prevent chafing of the insulation.**
3. **With the engine running, listen for noise and check the alternator for vibration. If the alternator is noisy or vibrates excessively, it should be removed for inspection and repair.**
4. **Ensure that battery terminals are clean and tight**

NOTE

The relay coils connected to the alternator "relay terminal" SHOULD NEVER BE PROVIDED WITH A SUPPRESSOR DIODE as the output current at this terminal is not rectified, thus rendering relay inoperative.

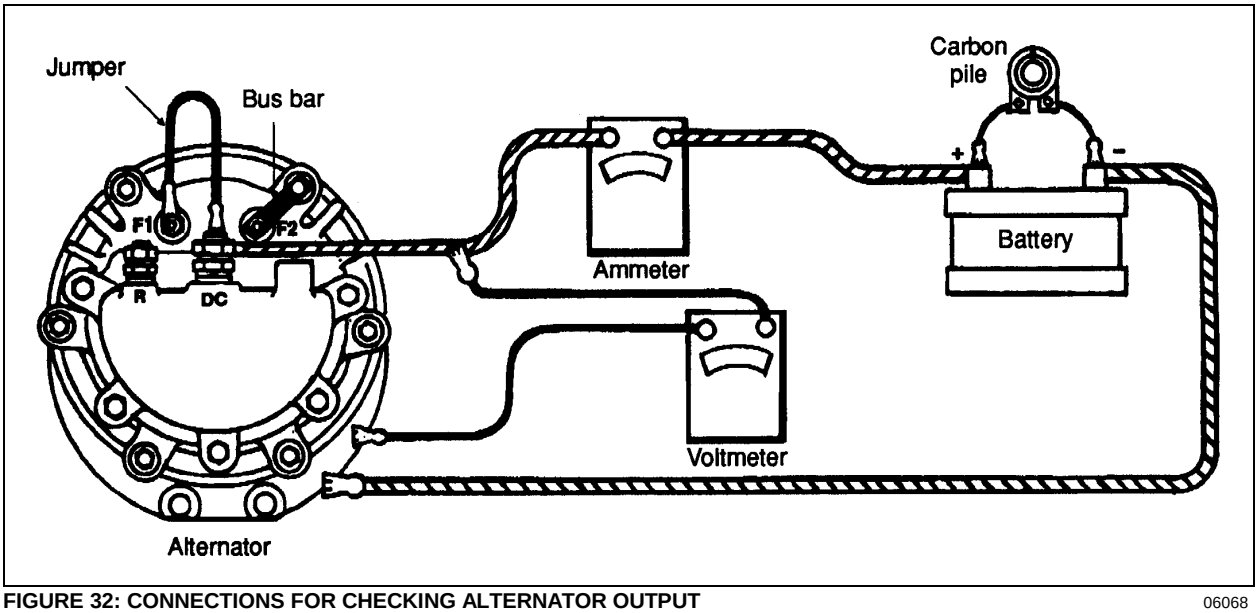

FIGURE 32: CONNECTIONS FOR CHECKING ALTERNATOR OUTPUT 06068

8. CHARGING SYSTEM TROUBLESHOOTING

The troubleshooting of the charging system is made easier by the use of a 12 and a 24 volt voltmeter, "*Battery"*, *"Battery balance"* and *"Battery Hi/Lo"* telltale lights mounted in the dashboard (for location refer to the *"Operator's Manual"*). The definition of each warning light is explained under the "ELECTRICAL SYSTEM MONITOR"

8.1 ALTERNATOR OR VOLTAGE REGULATOR

To determine which unit is faulty, proceed as follows:

1. Start the engine and momentarily connect a jumper from the "F1" field terminal to "DC (+)" terminal. For connections, refer to figure 32.

⚠ CAUTION ⚠

Do not feed the alternator field "F1" terminal for more than 10 seconds. High voltage could burn out the wires and components of charging system and seriously damage the alternator. Do not jump the "F2 (-)" terminal with the "DC (+)" terminal on the alternator. This will result in a direct short circuit.

a) If the voltmeter readings increase, trouble is located in the 24 volts regulator or wiring. Check the regulator as explained under "Voltage Regulator" later in this section.

b) If the voltmeter readings do not increase, the problem may be in the alternator.

8.2 ALTERNATOR DIAGNOSIS

⚠ CAUTION ⚠

Before checking the alternator, set the battery master switch to the OFF position.

It is not necessary to disassemble completely the alternator to make electrical checks. All electrical checks are made at the diode end of the assembly without having to remove the rotor, drive end frame or bearing. If the electrical components are not defective but bearing replacement is necessary, this can be done at the drive end without having to disassemble the diode end of the unit.

The components in the alternator that require electrical checks are the field winding, the six diodes, and the stator winding.

8.2.1 Diode Checks

Each diode may be checked for shorts and opens as follows:

1. Ensure the battery master switch is set to the "OFF" position.
2. Remove the pipe plug from underneath the end housing to drain the oil in the rectifier engine oil supply.
3. Remove the cap screws (7) and lock washers that attach the diode end cover to the end housing. Remove the end cover from the end housing.

NOTE

Do not operate the alternator unless this unit is completely reassembled.

4. Remove seal from the end housing, detach and remove "DC" and relay terminals, stud, insulating sleeves and O-rings.
5. Disconnect all diode flexible leads; i.e. three from the output terminal stud and three from the diode supports. See figure 33 for more details.

Each diode may be checked for short or open circuits with an ohmmeter.

NOTE

The ohmmeter polarity may be determined by connecting its leads to the voltmeter leads. The voltmeter will read up-scale when the negative leads are connected together and the positive leads are connected together. The polarity of the voltmeter leads may be determined by connecting the leads to the identified terminals on a battery.

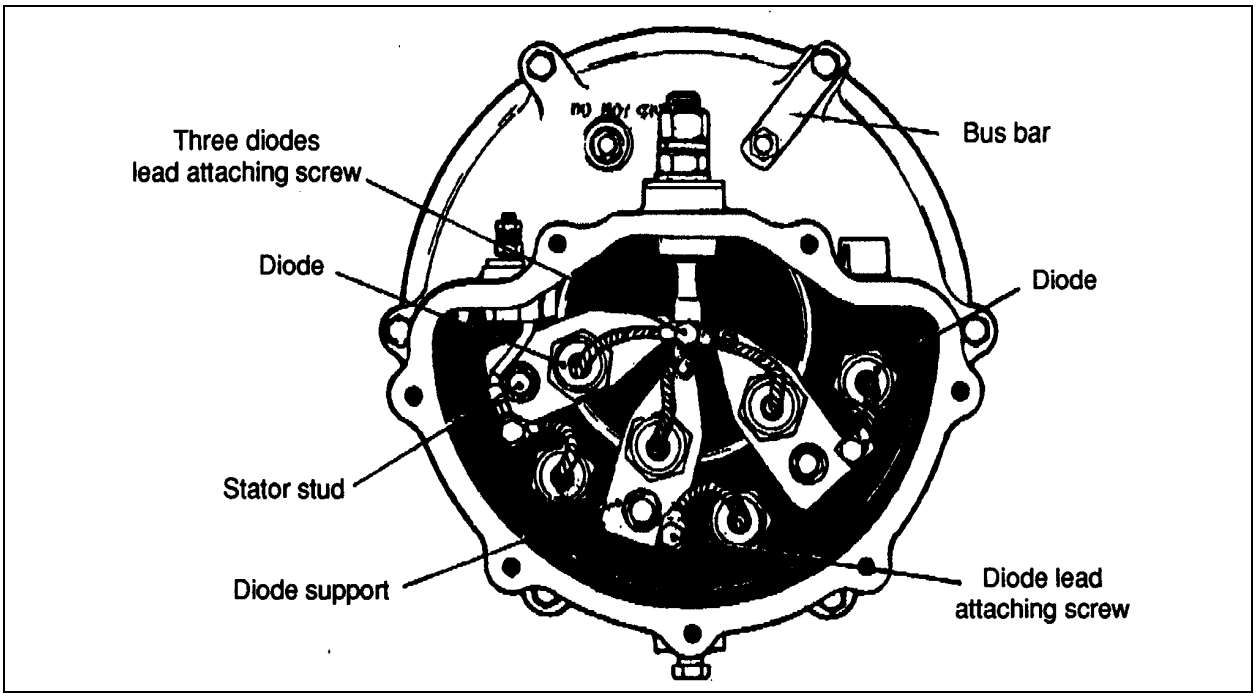

FIGURE 33: VIEW OF RECTIFIER END FRAME WITH COVER REMOVED 06069

NOTE
Use an ohmmeter with a single 1.5 volts cell. Most accurate reading will be determined when the 300 ohms value is calibrated to the center one-third of the scale. DO NOT USE high voltage, such as a 110 volts test lamp to check diodes.

To check diodes mounted in the supports for short fields, connect the positive ohmmeter lead to each diode lead and the ohmmeter negative lead to each support as shown in "A", "B", and "C" of figure 34. To check diodes mounted in the end frame for shorts, connect the ohmmeter positive lead to each diode lead and the ohmmeter negative lead to the end frame as shown in parts "D", "E", "F". The ohmmeter readings may vary considerably when checking diodes for shorts, but if the reading is 300 ohms or less, the diode is probably defective and should be replaced. A diode that reads 300 ohms or less will allow excessive reverse current from the battery. Replace defective diodes as explained later in this section.

To check the diodes mounted in the diode supports for open fields, connect the ohmmeter negative lead to each diode lead and the ohmmeter positive lead to each support as shown in parts “A”, “B”, and “C” of figure 35. To check the diodes mounted in end frame for shorts, connect the ohmmeter negative lead to each diode lead and the ohmmeter positive lead to the end frame as shown in parts “D”, “E” and “F”. An infinite resistance reading indicates an open diode. Diodes can be replaced by following the procedure outlined under DIODE REPLACEMENT”.

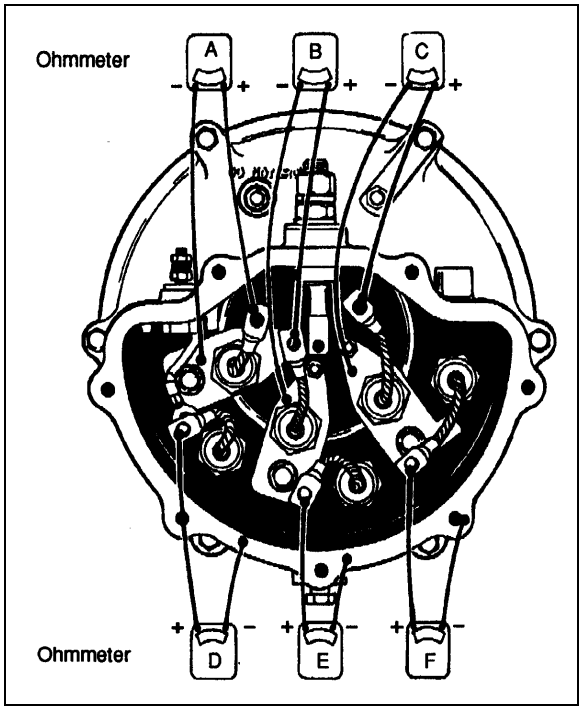

FIGURE 34: DIODE TESTING 06070

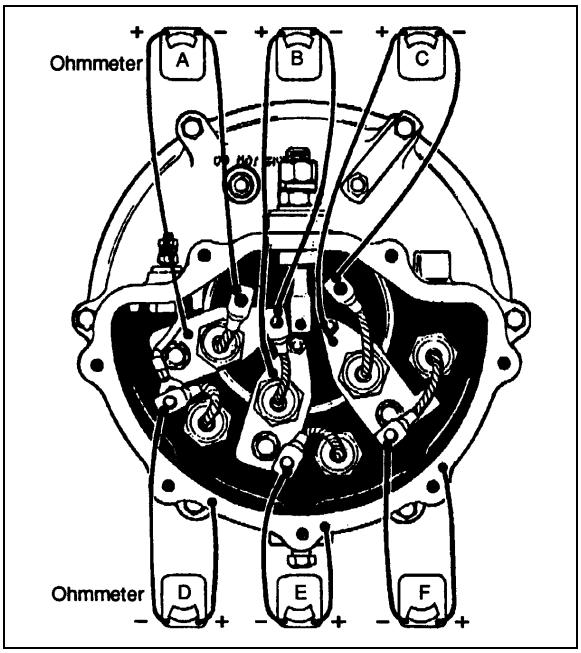

FIGURE 35: DIODE TESTING 06071

When reinstalling diodes, torque to 9-11 lbf-ft (12-15 Nm). Re-stake next to the threads in an arbor press with a 1/8 inch (3,2 mm) round punch. Press the punch with gradual pressure. Do not strike as the shock may damage the diodes.

8.2.2 Field Winding Check

The field winding may be checked for shorts and opens with an ohmmeter. To check the field winding, connect the ohmmeter to field terminal and to ground. A resistance reading above normal indicates an open, and a reading less than normal indicates a short field. The normal resistance value is 3.0 to 3.3 ohms at 80°F (27°C). An alternate method of checking is to place a battery of specified voltage, and an ammeter in series with the field winding. The current should register 7.2 to 8.3 amperes at 24 volts. Coil resistance is approximately 3.1 ohms. Amperage readings, other than the above, indicate an open, grounded, or shorted field. A defective field coil can be replaced by removing the end frame on which the field terminal is located and then removing the four field coil mounting screws. See FIELD REPLACEMENT" for a detailed procedure.

8.2.3 Stator Winding Check

The stator winding may be checked for open and short fields with an ohmmeter as follows:

Open Fields

Connect the ohmmeter leads to two pairs of diode supports as shown in parts "A", "B", and "C" of figure 36. Correct polarity of the leads must be observed. The ohmmeter should indicate a low resistance. If an infinite or a high resistance is measured in either one or both checks, the stator windings are open.

Ground

To check the stator windings for ground, connect an ohmmeter to the diode support and diode end frame as shown in part "C" of figure 36. The ohmmeter should indicate a very high or infinite resistance. If zero or a very low resistance is measured, the windings are grounded.

Shorts

The stator windings are difficult to check for shorts without finely calibrated laboratory test equipment due to the very low resistance values of the windings. However, if all other alternator checks are satisfactory, yet the unit fails to perform to specifications, shorted stator windings are probable.

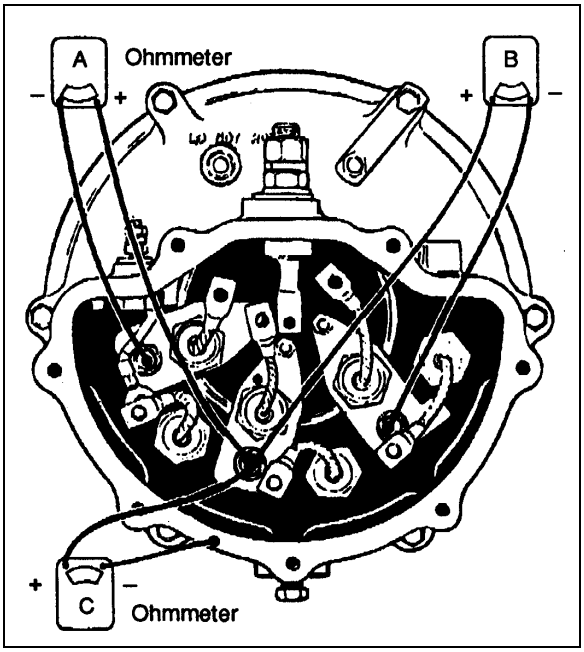

FIGURE 36: STATOR WINDING TEST 06072

8.3 DIODE REPLACEMENT

The following replacement procedures are based on the assumption that the diode end cover is still off and diode leads were disconnected as explained earlier in this section.

NOTE

When replacing a diode, make sure it is designed for a negative ground system. The diode can be identified by the symbol stamped on the diode case. The arrow must point toward the diode flexible lead.

To replace the three diodes that are mounted in the supports attached to the stator lead studs, it is necessary to remove the diode and support assembly. The two outer diode and support assemblies are identical and can be installed on either side. The center unit has a different support, with 2 inches (50,8 mm) between the mounting hole centers.

NOTE

The outer supports are provided with 2 ¼" (57,15 mm) center holes.

8.3.1 Diode Replacement (in Support)

1. Remove nut with lock washer attaching the diode support to the stator lead stud.
2. Remove nut, lock washer, and flat washer attaching support to the small stud in the end frame.
3. Remove the diode and support assembly. Then remove insert from small hole in support or from small stud in the end frame.
4. Remove nut and flat washer from diode mounting stud, and then remove diode from the support.
5. Place a new diode in the support and install a flat washer and nut on the diode mounting stud. Hold the diode with a wrench placed over flats on the diode, while tightening nut on the mounting stud to a torque of 160-180 lbf-in (18-20 Nm).
6. Place diode and support assembly over the stator lead stud and the small mounting stud. Place insert over small stud inside the hole in the support. Install flat washer, lock washer, and nut on the small stud, and tighten to a torque of 22-25 lbf-in (2-3 Nm). Install nut with lock washer on stator lead stud and tighten firmly.

8.3.2 Diode Replacement (in End Frame)

To remove diode, use a thin 1 inch open end wrench on flats of the diode case to unscrew diode from the end frame. Thread the new diode into the end frame and tighten to a torque of 160-180 lbf-in (18-20 Nm). If no other parts are to be replaced, refer to "DIODE END COVER INSTALLATION" in this section.

8.4 FIELD REMOVAL

1. Remove three diode and support assemblies from the end frame to provide access to the lower field to end frame bolts (2).
2. Remove nut with lock washer and flat washer from three stator lead studs.
3. Remove the six bolts and lock washers attaching the diode end frame to the stator frame.
4. Separate the end frame from the stator frame, and remove the end frame and field assembly from the rotor while pushing the stator lead studs out of the end frame.
5. Remove nut, lock washer, flat washer, and insulating washer which secure the field lead terminal stud in the end frame. Push the stud out of the end frame.
6. Remove field terminal stud insulating bushing and seal from the end frame. Remove insulating sleeve from the field terminal stud.
7. Remove the four bolts and lock washers attaching the field to the end frame.
8. To separate the field from the end frame, install four 3/8-24 x 3 inch bolts in place of the 3/8-24 x 2 inch bolts removed in step 7. Thread bolts in to even heights. Support the end frame in an arbor press. Then, using a suitable press plate to exert pressure on all four bolt heads, press the field out of the end frame.

8.5 FIELD INSTALLATION

1. Position the field assembly on the end frame. Insert four 3/8-24 x 3 inch bolts through the end frame and thread into the field to keep holes aligned.
2. Support the end frame on an arbor press bed so that the diodes will not be damaged, and press the field into the end frame. Press in until shoulder on field coil bottoms against the end frame.
3. Remove the four guide bolts. Install four 3/8-24 x 2 inch bolts, using new lock washers to attach the field to the end frame. Tighten bolts securely.
4. Place insulating sleeve in inner side of the field terminal stud hole in the end frame, and

insert the terminal stud through the sleeve. Place two O-rings and insulating bushing over the terminal stud and push into hole in the end frame. Install insulating washer, flat washer, toothed lock washer, and nut on terminal stud. Tighten firmly.

5. Install each stator lead stud in the end frame as follows: Place insulating washer over the stud and insert the stud through the end frame. Place the insulating bushing over the stud and position in end frame hole. Install flat washer, lock washer, and nut on the stud. Tighten firmly.
6. Install three diode and support assemblies on the end frame as previously directed under “DIODE REPLACEMENT”.
7. Install a new seal in notch around end of the stator frame. Insert field into the rotor and position the end frame against the stator frame. Attach end frame to the stator frame with six bolts and lock washers. Tighten bolts firmly.
8. If no other parts require replacement, refer to "DIODE END COVER INSTALLATION" in this section to complete the assembly.

8.6 STATOR REPLACEMENT

If tests performed under “Stator Winding Checks” earlier in this section indicated an open circuit or short in the stator, the stator and frame assembly must be replaced.

8.6.1 Removal

1. Remove diode end frame and field assembly as previously directed in steps 1 through 4 under “Field Removal”.
2. Remove the six bolts and lock washers attaching the stator frame to the drive end frame.
3. Separate the stator frame from the drive end frame and remove the stator frame from the end frame and rotor.

8.6.2 Soldering Stator Terminal Leads

1. Using a wire brush, thoroughly clean the wire and terminal.
2. Silver solder the stator lead to the terminal using a torch.
3. Thoroughly clean the silver solder connection with a wire brush.
4. Using a high grade energized rosin flux, coat the silver soldered connection with a 80-20 tin-lead solder or pure tin solder to prevent deterioration of the silver solder by engine oil.

NOTE
The silver solder will provide the required mechanical strength, which will not be affected by temperature. The tin-lead solder will protect the silver solder connection from deterioration by engine oil.

8.6.3 Installation

1. Position new seal in notch around the drive end of the stator frame.
2. Position the stator and frame assembly over the rotor against the drive end frame. Attach the stator frame to the drive end frame with six bolts and lock washers. Tighten bolts firmly.
3. Install diode end frame and field assembly as directed in steps 5, 6 and 7 under “installation”.
4. Install rectifier end cover as directed later.

8.7 DIODE END COVER INSTALLATION

1. Make sure all diodes are properly installed and securely tightened. Leads from diodes threaded into the end frame must be securely attached to the diode supports. The relay terminal lead must also be attached to the left diode support.
2. Connect leads from the three diodes mounted in supports to the output terminal stud. Tighten the attachment screw firmly. Place insulating bushing over relay terminal stud.
3. Place a new seal in the diode end frame.
4. With the end cover in place against the end frame, install the cap screws and lock washers. Tighten the cap screws evenly and firmly.
5. Make sure the drain plug is installed in bottom of the end cover and securely tightened.

8.8 ALTERNATOR REMOVAL (DELCO)

1. Place *"Starter Selector Switch"* in engine compartment to the *"OFF"* position.

2. Place the battery master switch to the “OFF” position.
3. Remove alternator drive belt (see “ALTERNATOR DRIVE BELT”).

NOTE

When reinstalling drive belt, it is important to set the belt tension correctly. (Refer to the appropriate heading later in this section).

4. Scratch off protective sealer from electrical connections (relay, field and positive terminals). Refer to figure 37.

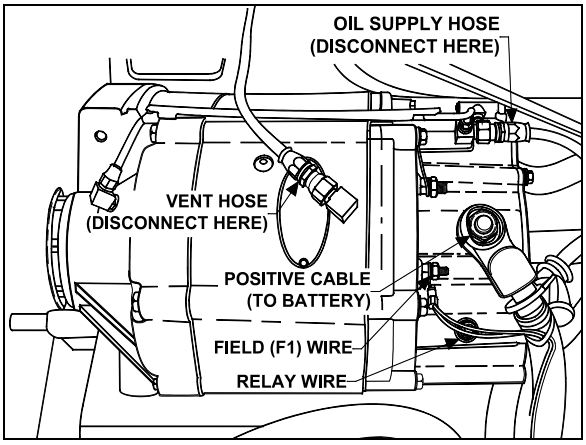

FIGURE 37: ALTERNATOR (HOSES AND WIRES) 06341

NOTE

After reconnecting electrical wires, it is important to cover terminals with protective sealer (Prévost #680745).

5. Disconnect wire #25 from the relay terminal, wire #107 from the field “F1” terminal and disconnect battery cable from the positive “+” terminal on the diode end cover. Tag wires removed to ease identification at time of installation. Refer to figure 37.
6. Disconnect oil supply line and vent hose from top of alternator (Fig. 37) and tape lines to prevent entry of foreign matter. Disconnect oil drain hose from bottom of alternator (Fig. 38) and tape line to prevent entry of foreign matter.
7. Remove the four bolts and lock washers fixing the alternator (refer to fig. 38).

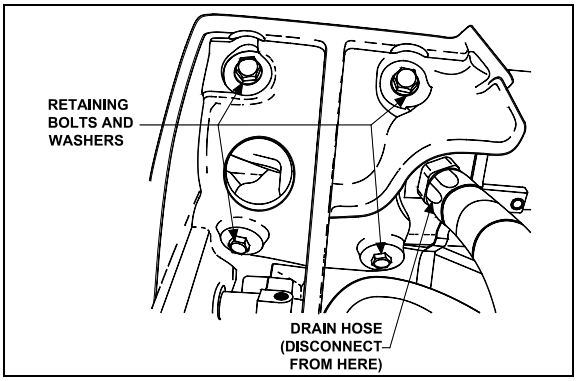

FIGURE 38: ALTERNATOR RETAINING BOLTS AND WASHERS 06350

⚠ WARNING ⚠

Alternator weights approximately 154 lbs (70 kg). Another person is required to take the alternator out of the engine compartment.

8.8.1 Disassembly of Alternator

After diode, field and stator winding checks, the alternator can be disassembled to repair a faulty component, such as field or stator, or to proceed with bearing or rotor replacement. Perform the following steps to disassemble the alternator:

1. Remove nuts and washers from "DC" terminal on diode end frame.
2. Separate the diode cover plate from the diode end frame by removing the mounting screws.
3. Remove the washer, nut and lock washer attaching the diode supports to the end frame, the three screws connecting the diode leads to the diode supports, and the three nuts which attach the stator studs to the diode supports.
4. Separate the diode support assemblies from the diode end frame, and the three nuts that connect the studs to the diode end frame.
5. Mark the position of the drive end frame and diode frame with respect to the stator assembly so that the parts can be reassembled in the same position.
6. Detach the diode end frame and field assembly from the stator assembly by removing the attachment screws.
7. Separate the field assembly from the diode end frame by removing the four attachment screws.

8. Separate the rotor assembly and drive end frame from the stator assembly by removing the attaching screws.
9. Remove the shaft nut and washer, and the pulley. Press the rotor shaft out of the drive end frame.
10. Remove the retainer plate and pull the bearings from the drive end frame.

8.8.2 Alternator Cleaning and Inspection

Whenever the alternator is disassembled, it should be cleaned and inspected.

Cleaning

If sludge has accumulated on the stator, a light mineral oil should be used to clean it.

Inspection

When the alternator has been disassembled to the extent that the stator is exposed, the stator should be checked for the following:

a) Adequate varnish.

b) Proper spacing of conductors so that “near shorts” do not exist.

c) Proper phase lead placement.

d) Strong conductor and cross-over welds

8.8.3 Bearing or Rotor Replacement

Whenever the rotor and drive end frame are disassembled for any reason, the single-row ball bearing must be replaced with a new one due to the probability of damage during disassembly.

Removal and Disassembly

1. If the pulley was not removed from the rotor shaft at time of alternator removal, remove the nut and flat washer from the shaft and pull the pulley off the shaft.
2. Remove the six bolts and lock washers attaching the drive end frame to the stator frame. Separate the drive end frame from the stator frame. Remove the drive end frame and support assembly.
3. Support the drive end frame in an arbor press so that the rotor can be pressed down out of the end frame. Using a suitable adapter against the end of the rotor shaft that will pass through the inner race of the double-row ball bearing, press the rotor down out of the end frame and bearings. Since the single-row bearing outer race is held in the end frame by the retainer plate, and the inner race is a press fit on to the rotor shaft, the bearing will probably be damaged when the shaft is pressed out and need to be replaced with a new part.
4. Remove the six screws attaching the bearing retainer plate to the drive end frame. Remove the retainer plate, the single-row bearing and the bearing spacer from the end frame.
5. Support the drive end frame in an arbor press with the double-row bearing down, so that the bearing can be pressed down out of the end frame. Using a suitable driver that will exert a force on the bearing outer race, press the bearing out of the end frame.
6. Remove the rubber bearing clamp from groove in the end frame.

Assembly and Installation

1. Install a new single-row ball bearing into inner side of the drive end frame. Install the bearing retainer plate and attach with six screws. Stake screws in place after tightening.
2. Position the rubber bearing clamp in the groove in bearing bore of the drive end frame. Lubricate the clamp to permit the bearing to be pressed in without dislodging or damaging the clamp.
3. Position the rotor in an arbor press with the shaft end up. Install the drive end frame and single-row bearing assembly over the rotor shaft. Using a driver over the rotor shaft, which will exert a force on the bearing inner race, press the bearing onto the shaft until it bottoms against the rotor.
4. Install bearing spacer over the rotor shaft. Position the double-row bearing over the rotor shaft at end frame bore. Using an adapter that will exert a force on both the inner and outer races of the bearing, press the bearing onto the shaft and into the end frame until the inner race bottoms against the bearing spacer.
5. Place a new seal around the drive end of the stator frame.
6. Insert the rotor between the stator and field, and position the drive end frame against the stator frame. Attach the end frame to the stator frame with six bolts and lock washers. Tighten the bolts to a torque of 5 to 5.4 lbf-ft (6-7 Nm).

⚠ CAUTION ⚠

When replacing the alternator on the vehicle, ensure that an alternator with the proper drive ratio is used. Installation of an alternator with any other drive ratio will result in severe and costly damage to the alternator and engine.

8.8.4 Alternator Reassembly

Reassembly is the reverse of disassembly.

NOTE

When tightening the outside nut on the "DC" output terminal, torque the nut to 30- 35 lbf-ft (41-47 Nm). The lower nut should be supported while doing so.

When reinstalling diodes, tighten to a torque of 9-11 lbf-ft (12-15 Nm).

8.8.5 Output check

When removed from the engine, the alternator may be checked without circulating oil on a test bench, providing the output is limited to 100 amperes or less. The alternator may be bench tested without circulating oil at outputs exceeding 100 amperes, as long as the period of operation is limited to less than 15 seconds.

⚠ CAUTION ⚠

Operating the alternator at outputs greater than 100 amperes without adequate oil circulation for periods exceeding 15 seconds, will cause the alternator to overheat, resulting in damage to the winding and diodes.

If the alternator is to be operated at an output greater than 100 amperes for longer than 15 seconds, circulating oil must be provided. SAE 30 engine oil must be applied to the connection on the diode end cover at a pressure of 35 psi and at a temperature of 60°F to 220°F (16°C to 104°C). This will provide an oil flow of about one gallon per minute.
To check the alternator on a test bench, make electrical connections as shown in figure 32. Make sure the negative battery terminal is connected to the alternator frame.

8.9 ALTERNATOR DRIVE BELT

Removal

1. Insert a ¾'' socket drive into the tensioning arm opening (Fig. 39).
2. Twist the tensioning arm to slacken belt.
3. Remove belt.

Installation

Installation of the alternator drive belt is the reverse of removal.

8.9.1 Adjustment

Correct belt tension is required to maximize belt life. The tensioning arm maintains proper belt tension, no adjustment is required.

Check for wear and proper tension every 6,250 miles (10 000 km) or twice a year, whichever comes first.

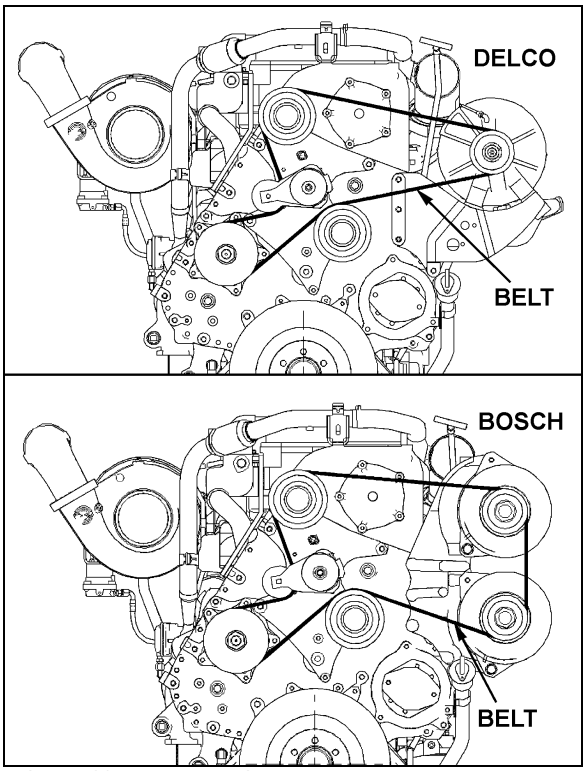

FIGURE 39: ALTERNATOR DRIVE BELT 06509

9. VOLTAGE REGULATOR (DELCO)

The 24 volt regulator used with Delco alternator is located in the engine compartment R.H. side (MTH).

The transistor regulator illustrated in figure 40 is an assembly mainly consisting of diodes, capacitors, resistors and transistors. These components are mounted on a printed circuit panel board to form a completely static unit containing no moving parts. Regulators of this type have only four terminals which are identified "GND." (ground), "FLD" (field) "BAT" (battery) and "IGN" (ignition).

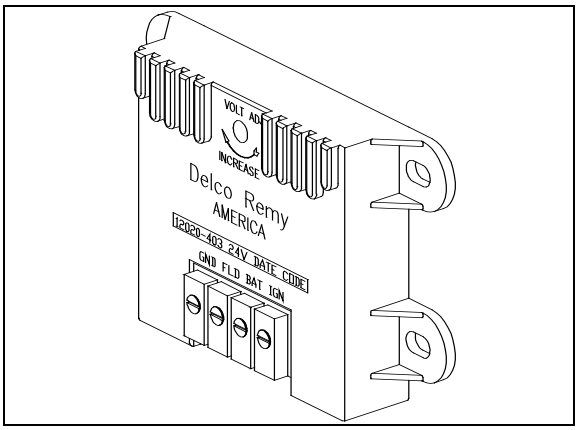

FIGURE 40: VOLTAGE REGULATOR 06408

The regulator components work together to limit the alternator voltage to the preset value by controlling the alternator field current. This is the only function that the regulator performs in the charging system.

The voltage at which the alternator operates is determined by the regulator adjustment. Once adjusted, the alternator voltage remains constant. The regulator is unaffected by length of service, changes in temperature, or changes in alternator output and speed.

A typical wiring diagram of a negative ground system is illustrated in figure 41. This diagram shows only the basic charging system components. It does not show any components such as the control relays. Refer to *"Charging system"* wiring diagram, in *"Wiring diagrams"* for the electric circuits and connections.

Voltage regulator maintenance

The voltage regulator is a service-free electronic unit. When it fails, it should be replaced. The following procedure must be used:

⚠ CAUTION ⚠

Set the battery master switch to the "OFF" position.

- Open the engine compartment R.H. side door in order to get access to the voltage regulator;
- Unscrew the electrical cable connectors;
- Unscrew the voltage regulator unit;
- Install a new voltage regulator by reversing the procedure.

NOTE

For information about BOSCH alternator and voltage regulator, refer to technical publication "Repair and Testing Instructions for T1 Alternator 0120 689 552".

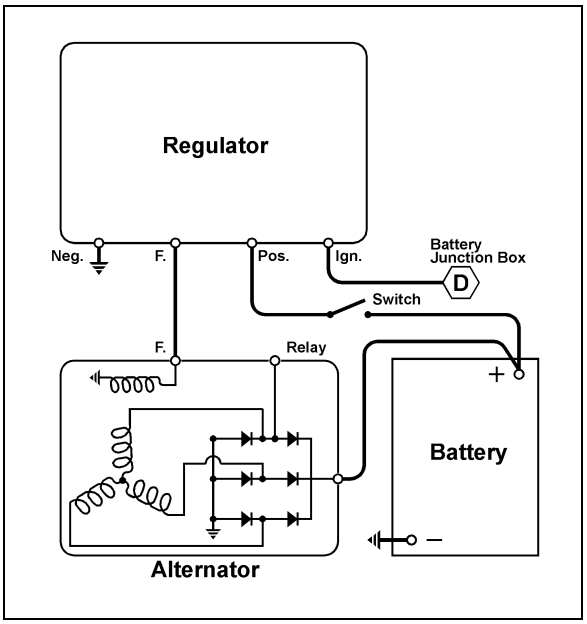

FIGURE 41: TYPICAL WIRING DIAGRAM OF A NEGATIVE GROUND SYSTEM 06415

9.1 TROUBLESHOOTING PROCEDURES

Trouble in the electrical system will usually be indicated by one of two conditions: an undercharged or an overcharged battery. Either condition can result from an improper voltage regulator setting:

Checking Battery Voltage

The absence of gas production during the continuous appearance of the green dot in the battery's built-in hydrometer indicates that the voltage setting is satisfactory. Check the following conditions:

Checking Voltage Regulator Setting

1. To check the voltage setting, connect a voltmeter across the "POS" and "NEG" terminals on the regulator, and an ammeter to the "C" terminal on the alternator. Refer to figure 42.
2. Operate the engine at approximately 1000 rpm (about 2300 alternator rpm), with accessories on, to obtain an alternator output of 20-200 amperes.
3. Note the voltage setting. It should be steady at 27.5 volts.
4. If not, the desired setting can be obtained by removing the plug from the voltage regulator cover and slightly turning the adjusting screw inside the regulator. Turn the adjusting screw clockwise to increase the voltage setting or counterclockwise to decrease it. See figure 43 for details.

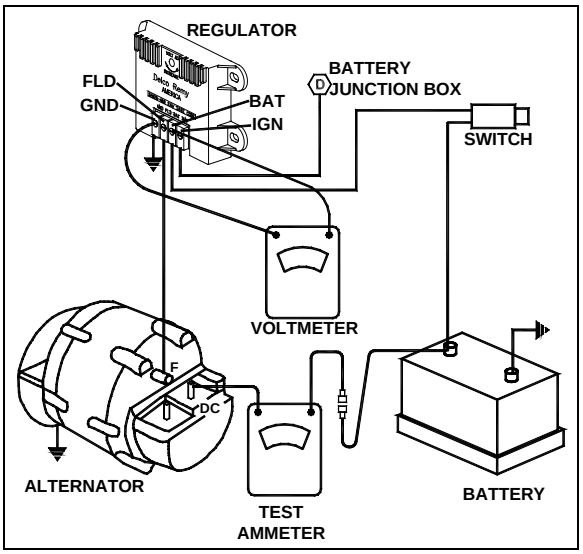

FIGURE 42: REGULATOR VOLTAGE SETTING 06416

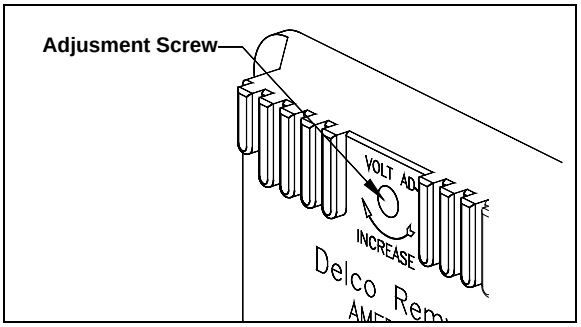

FIGURE 43: ADJUSTING REGULATOR VOLTAGE SETTING 06418

NOTE
If regulator voltage cannot be adjusted to the specified setting, remove the regulator and repair or replace it as necessary.

9.1.1 Undercharged Battery

If the voltage setting is steady and reasonably close to the specified value and the battery is undercharged, raise the setting by 0.3 volt, then check for an improved battery condition over a minimum service period of 48 hours. If the voltage cannot be adjusted to the desired value, the alternator should be checked as follows:

1. Stop alternator, turn off all accessories and disconnect battery ground cable.
2. Disconnect all leads from the regulator and from the alternator field. **Do not allow leads to touch ground.**
3. Connect a voltmeter and an ammeter in the circuit at the alternator "DC" terminal.
4. Connect a jumper lead from the alternator "DC" terminal to the alternator field terminal.

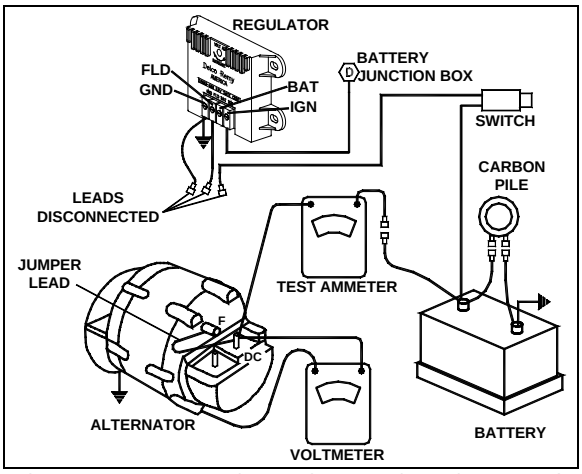

FIGURE 44: REGULATOR VOLTAGE TEST (UNDERCHARGED BATTERY) 06417

5. Connect a carbon pile resistor load across the battery. Turn to the *"Off"* position.
6. See figure 44 for wiring connections.
7. Reconnect battery ground cable
8. Turn on all vehicle accessories.
9. Operate alternator and adjust carbon pile resistor load as required to check for rated output as given in Delco-Remy Service Bulletin 1G-187 or 1G-188.
10. Check the alternator field winding as follows: Disconnect the lead from the field terminal and connect an ohmmeter from the field terminal to ground. A resistance reading above normal indicates an open field, and a resistance reading less than normal indicates a shorted or grounded field. The normal resistance can be calculated by dividing the voltage by the field current published in Delco-Remy Service Bulletin 1G-186, 1G-187, or 1G-188. The normal resistance value should be at or near midscale on the ohmmeter for accuracy. An alternate method of checking is to connect a battery of specified voltage and an ammeter in series with the field winding, and compare readings with published specifications in Delco-Remy Service Bulletin 1G-186, 1G-187, or 1G-188. An alternator is defective if it does not produce rated output or if field windings are faulty. If the alternator provides rated output, and field windings check satisfactorily, the regulator should be checked as covered under "Regulator Checks".

9.1.2 Overcharged Battery

If the voltage setting as checked above is steady and reasonably close to the specified value, lower the setting by 0.3 volt and check for an improved battery condition over a minimum service period of 48 hours. If the voltage cannot be adjusted to the desired value, proceed as follows: where the alternator field is grounded internally in the alternator as shown in figure 41 a shorted or grounded field or a defective regulator can cause an overcharged battery. The field winding can be checked as covered in paragraph "Undercharged Battery". If the field winding is found to be correct, the alternator is not defective, and the regulator should be checked as covered under "Regulator Checks".

9.2 REGULATOR CHECKS

Separate the cover from the base, and remove the panel assembly from the cover. Carefully note the location of all washers and lock washers.

The component parts are keyed to figure 41. Before making electrical checks, visually inspect the components and make sure all soldered connections are secure. Various electrical checks with an ohmmeter can be made to determine which components are defective.

The ohmmeter **must** be accurate, and should be a scale-type meter with a 1.5 or 3 volt cell. Most digital ohmmeters cannot be used to check semiconductors. However, some digital ohmmeters are specially designed to test semiconductors and can be used to test components in the regulator. Consult the ohmmeter's manufacturer for specifications concerning the capabilities of the ohmmeter.

It is important that all of the following checks be made. If a defective part is found, replace it before proceeding with the remaining checks. Be sure to make all the checks since more than one component may be defective.

A defective regulator can be repaired according to the following methods:

A) By changing the printed circuit board in the regulator. Unscrew the retaining screws on the printed circuit and remove it. Install a new printed circuit board. This method is the most commonly used.

B) By removing any retaining screws involved and unsoldering the connections. When resoldering, limit solder time to a minimum as excessive heat may damage the printed circuit board and component parts. However good soldered connections are essential for satisfactory operation. A resin core 63% tin 37% lead solder with a 360°F (182°C) melting point is recommended along with a soldering iron rated at 50 watts or less. Use extreme care to avoid overheating. Before checking the printed circuit board, remove transistor TR1, which must be checked separately. Connect the ohmmeter as shown in figure 45, and then reverse the ohmmeter leads to obtain two readings on the same component. Use the middle scale on scale-type meters on which the 300 ohm value should be within or nearly within, the middle third of scale.

Capacitors C1 and C2 = The ohmmeter should read high and low on each capacitor. If not, replace capacitor.

Diodes D1, D2 and D3 = Each diode should give one high and one low reading. If not, replace diode.

Resistor R2 = Turn voltage adjustment screw (identified in figure 43) with ohmmeter connecting each way. Reading should change as slotted screw is turned. If not, replace R2.

Transistor TR1 = See figure 45. Use the low scale. Each of the three checks should read low and high. If not, replace TR1.

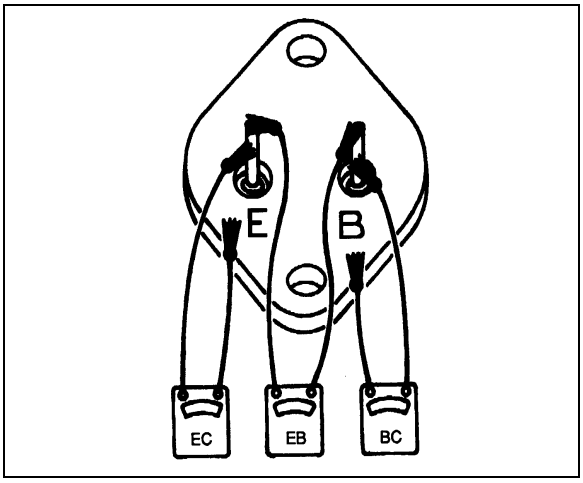

FIGURE 45: CHECKING TRANSISTOR TR1 06081

Transistor TR2 = Change the ohmmeter to use the low scale. EB should read low and high. BC should read low and high. EC should both read high. If not, replace TR2. See figure 46.

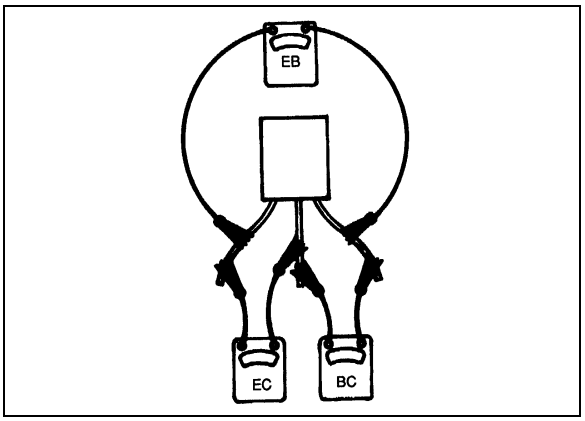

FIGURE 46: CHECKING TRANSISTOR TR2 06081

9.3 ADJUSTING VOLTAGE

After repair, the regulator must be adjusted to the desired voltage setting. Follow the procedure under "Checking Voltage Regulator Setting". Slowly turn the adjusting screw full range and observe the voltmeter to ensure that the voltage is being controlled, then, while still turning, slowly adjust to the desired setting.

10. BATTERY EQUALIZER

VoltMaster Battery Equalizer Owner's Manual (100 amps) is annexed at the end of this section. Refer to "Electrical Compartments and Junction Box" in this section, for location.

11. STARTER

Refer to Mitsubishi Electric Corporation (MELCO) Service bulletin ME003-P annexed at the end of this section for information and maintenance instruction on MELCO 105P70 starter.

⚠ CAUTION ⚠

Prior to the installation of the Mitsubishi starter, the Flywheel Ring Gear must be examined for excess wear or damage. Service Bulletin A1-M1N-1729EN included at the end of Section 06 shows acceptable levels of wear, and illustrates the proper measuring procedure. Maximum wear is 0.5mm. Ring Gears with more than 0.5mm of wear or damage must be replaced before installing the new starter to prevent engagement and/or disengagement problems. Failure to do so will render the Warranty null and void.

⚠ CAUTION ⚠

Do not engage starter for more than 15 seconds at a time. If engine does not start within 15 seconds, release ignition key and let starter cool for one minute before attempting to restart.

12. ENGINE BLOCK HEATER

The vehicle may be equipped with an engine immersion-type electric block heater to assist cold weather starting. The heater male electric plug is easily accessible through the engine compartment R.H. side door (Fig. 47). To use it, connect the female plug of an electrical extension cord to the heater plug. The extension cord must be plugged into a 110-120 V AC power source only. The engine block heater should be used whenever the vehicle is parked for an extended period of time in cold weather and a suitable power source is available.

12.1 MAINTENANCE

This heater is non-serviceable except for the cord, and if faulty, must be replaced as a unit.

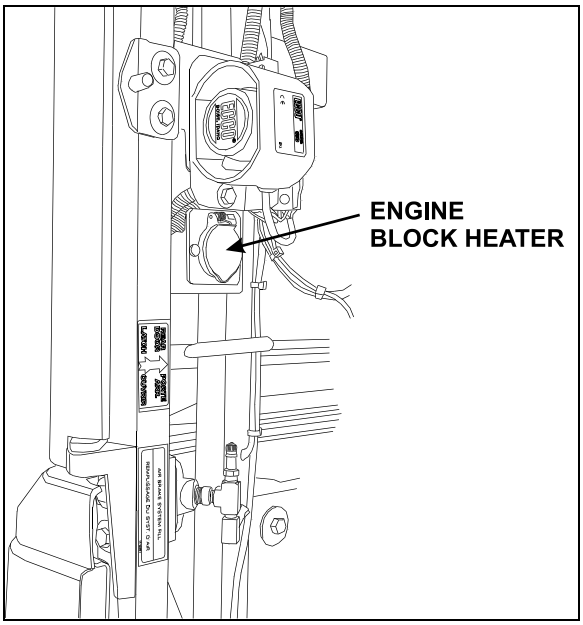

FIGURE 47: ELECTRIC HEATER PLUG LOCATION 18354

13. EXTERIOR LIGHTING

The circuit for exterior lights, as well as their control switches, relays and circuit breakers are shown on the applicable wiring diagrams. Wiring diagrams are located in the technical publication box.

13.1 HEADLIGHTS

Each headlight assembly consists of two headlamp module 90 mm (3½ inch) equipped with a 12-volt halogen bulb and one 100 mm (4 inch) 12-volt LED turn/signal lamp. Outer lamps have a double function (both low and high beam). Inner lamps are used for high beam or daytime running light. The inner or outer lamp uses the same single filament halogen bulb part number.

NOTE
If vehicle is equipped with optional Xenon headlamps, refer to paragraph 13.1.6.

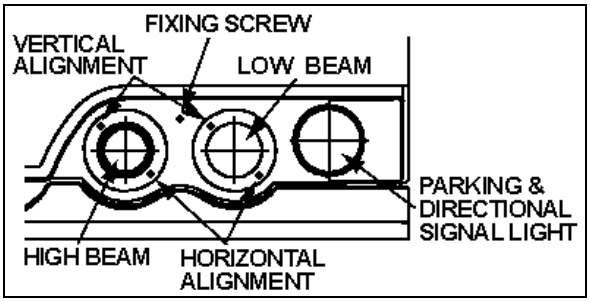

FIGURE 48: HEADLIGHT ASSEMBLY 06546

13.1.1 Headlight Beam Toggle Switch

The multifunction lever located on the steering column is used to select proper lighting. High beams or low beams can be selected by pulling the lever rearward. A high beam indicator on the central dashboard panel is illuminated when the high beam circuit is energized.

NOTE
Pulling the lever rearward while the lights are off will flash the headlights.

13.1.2 Maintenance

Clean headlights with soap and water and a good glass cleaner whenever dirty. For maximum illumination, headlight connections must be coated with a dielectric grease to prevent oxidation and proper voltage must be maintained. Low battery voltage, loose or dirty contacts in wiring system and poor ground contribute to a decrease in voltage. Check wiring and connections regularly and keep battery properly charged. When a headlight burns out, a new bulb must be installed. Headlights must be properly aimed to provide maximum allowable road illumination. When using mechanical aiming devices, follow manufacturer's instructions.

Headlight aim should be checked after installing a new bulb. Aiming can be performed without opening headlight assembly. Horizontal and vertical aiming of each module is provided by two adjusting screws that pivot the module in the housing for proper alignment (fig. 48). There is no adjustment for focus since the module is set for proper focus during manufacturing assembly.

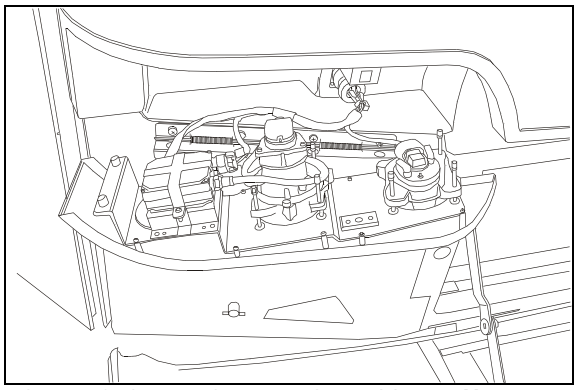

FIGURE 49: OPENING HEADLIGHT ASSEMBLY 06547

NOTE
Make sure headlight assembly is properly positioned into its housing before securing using fixing screw.

⚠ CAUTION ⚠
Use a soft cloth to clean the parking and front turn signal lamp.

13.1.3 Headlight Adjustment

The following is a general procedure for headlight adjustment using mechanical equipment, such as a *"Hoopy 100" Aligner.* If your mechanical equipment is different, refer to the manufacturer's instruction manual.

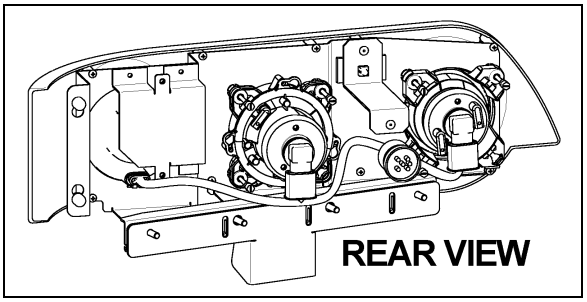

FIGURE 50: HEADLIGHT ASSEMBLY REAR VIEW 06548

Setting aligner according to slope

1. Park vehicle on a level floor.

2. Set the support rail (Prévost #29261) down (Fig. 51). Using shims, adjust its level to stabilize it.

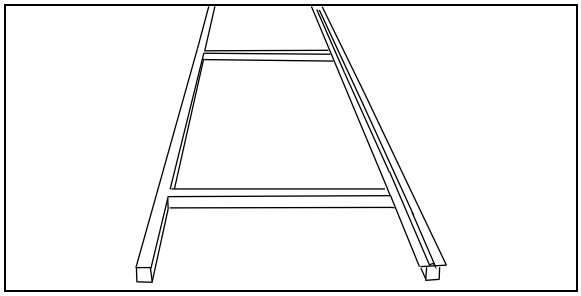

FIGURE 51: SUPPORT RAIL INSTALLATION 06501

3. Install jigs #29263 and #29262 onto the support rail. Position the support rail so that both stops are centered between the two beams (Fig. 52). Mark the position for future reference.

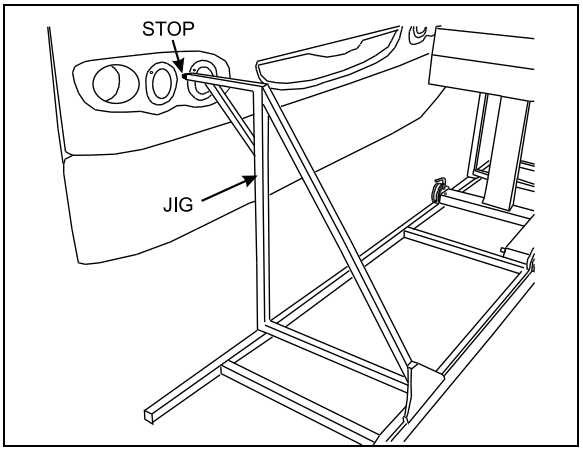

FIGURE 52: INSTALLATION OF JIGS 06499

NOTE
The stops will position the support rail between 16-24 inches of vehicle.

4. Remove the jigs.
5. Install *"Hoopy 100" Aligner* onto support rail (Fig. 53).
6. Using an Allen key on the front wheel, level Hoopy 100 aligner until spirit level bubble is centered (Fig. 54 and 55).
7. Install a calibration fixture in the axis of front axle wheel and one in the axis of rear axle wheel (Fig. 56).
8. Adjust mirrors so that lines are perfectly aligned.
9. Record reading.

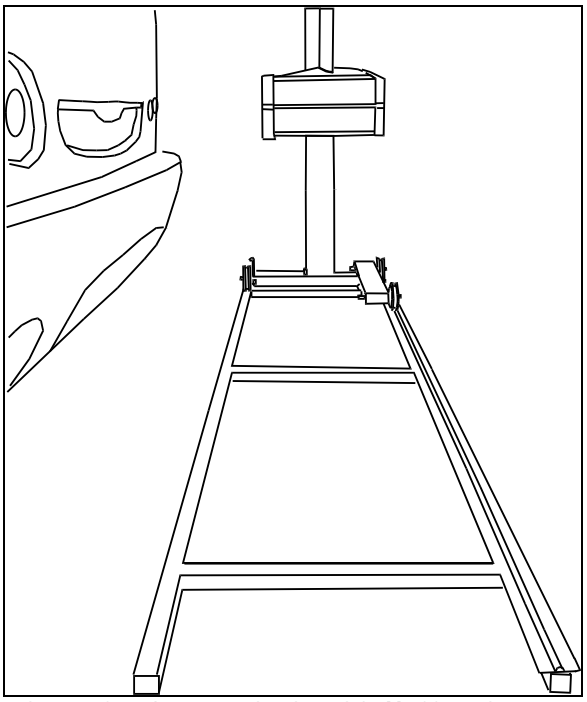

FIGURE 53: INSTALLATION OF HOOPY 100 ALIGNER 06496

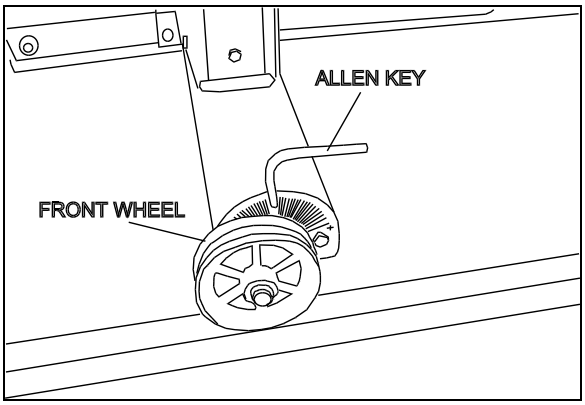

FIGURE 54: ADJUSTING HOOPY 100 LEVEL 06498

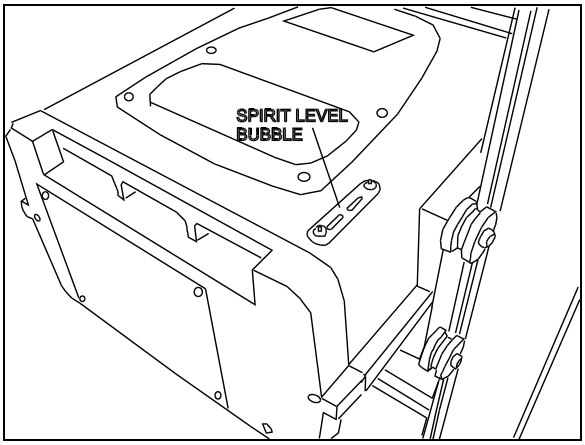

FIGURE 55: SPIRIT LEVEL 06500

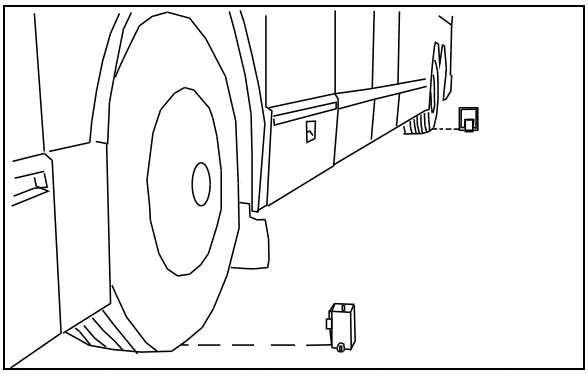

FIGURE 56: INSTALLING CALIBRATION FIXTURES 06497

NOTE
The floor level reading must be added to the aligner reading to ensure a precise alignment.

10. Transfer positive (+) or negative (-) reading of calibration fixtures to the front wheel of Hoopy 100 aligner. Add this reading to Hoopy 100 aligner level reading.
    * eg – level: 0.2, mirrors: 0.1 = 0.3
    * eg – level: -0.2, mirrors: 0.1 = 0.1

NOTE
If vehicle remains stationary during the headlight alignment procedure, it is not necessary to check floor slope each time.

Headlight Alignment

⚠ CAUTION ⚠
This mechanical equipment must be calibrated by metrology before initial set-up or after major overhaul. Calibration must be performed annually.

1. Set the support rail (Prévost #29261) down (Fig. 51). Using shims, adjust its level to stabilize it. Use previous reference marks to ensure proper positioning.
2. Make sure that headlight assembly fixing screw is properly fastened (Fig. 48).

NOTE
Make sure that the vehicle is at proper height (suspension) and that air pressure is above 90 psi.

3. Install *"Hoopy 100" Aligner* onto support rail (Fig. 53). Turn aligner ON.

⚠ CAUTION ⚠
Vehicle must be parked at the same location each time. If location is changed for any reason, floor slope alignment and aligner leveling must be redone. Refer to "Setting aligner according to slope".

NOTE
If aligner indicates LOW BATT, battery must be charged for 12 hours.

Low Beam Adjustment

1. Turn ON low beam lights.
2. Press ALIGN TO LAMP and move aligner in front of first beam.

NOTE
If beam is offset, a LOW CANDLES message will appear. Using vertical and horizontal alignment screws, adjust beam as needed (fig. 48).

3. Adjust aligner height (move aligner sideways if needed) so that XX appears in the aligner sight. Lock aligner side handle.
4. Open Hoopy 100 aligner door.
5. Press AIM LAMP down; press a second time so that LOW ADJUST appears in the sight. Arrows indicate in which direction to adjust the beam using the vertical and horizontal adjustment screws. Perform this adjustment until XX appears in the sight.
6. Aligner will reset after 5 minutes.
7. Repeat for other low beam light.

High Beam Adjustment

1. Turn ON high beam lights.
2. Press ALIGN TO LAMP and move aligner in front of first beam.
3. Adjust aligner height (move aligner sideways if needed) so that XX appears in the aligner sight. Lock aligner side handle.
4. Open Hoopy 100 aligner door.
5. Press AIM LAMP down; press a second time so that HIGH ADJUST appears in the sight. Arrows indicate in which direction to adjust the beam using the vertical and horizontal adjustment screws. Perform this adjustment until XX appears in the sight.
6. Aligner will reset after 5 minutes.
7. Repeat for other high beam light.
8. Store equipment away in a safe place.

If proper mechanical equipment is not available, perform adjustments as described hereafter:

1. Headlight aiming and inspection can be accomplished by visual means. This is done on a screen located at a distance of 25 feet (7,6 m) of the headlights. It should be of adequate size with a matte-white surface well shaded from extraneous light and properly adjusted to the floor area on which the vehicle stands. Provisions should be made for moving the screen or its vertical centerline so that it can be aligned with the vehicle axis. In addition to the vertical centerline, the screen should be provided with four laterally adjustable vertical tapes and two vertically adjustable horizontal tapes.
2. The four movable vertical tapes should be located on the screen at the left and right limits called for in the specification with reference to centerlines ahead of each headlight assembly.
3. The headlight centerlines shall be spaced either side of the fixed centerline on the screen by ½ the lateral distance between the light source centers of the pertinent headlights. The horizontal tapes should be located on the screen at the upper and lower limits called for in the specification with reference to the height of beam centers and the plane on which the vehicle rests, not the floor on which the screen rests (Fig. 57).
4. The nominal vertical aim position on lower beam headlights shall be adjusted based on the headlight mounting height, from the ground to the light source center of the headlight, according to table1.

TABLE 1 – VERTICAL BEAM AIM GUIDELINES

Headlight (centerline) Mounting Height	Nominal Vertical Aim	Aim Inspection Limits for Vertical Aim
56 to 90 cm (22 to 36 inch)	0 Vertical	10 cm (4 inch) up to 10 cm (4 inch) down
90 to 120 cm (36 to 48 inch)	5 cm (2 inch) down	5 cm (2 inch) up to 15 cm (6 inch) down
120 to 140 cm (48 to 54 inch)	6.4 cm (4 inch) down	4 cm (1.5 inch) up to 16.5 cm (6.5 inch) down

5. High beam headlights are aimed so that the center of the high-intensity zone is located at the horizontal and straight ahead vertically (Fig. 58).
6. Low beam headlights are aimed so that the top edge (the cutoff) of the high-intensity zone is at the vertical location as per Table 1 and the left edge of the high-intensity zone is at the vertical centerline of the headlight (Fig. 59).

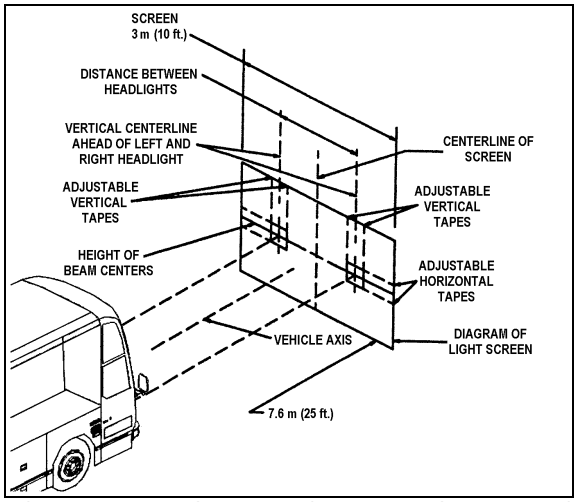

FIGURE 57: ALIGNMENT OF HEADLIGHT AIMING SCREEN 06502

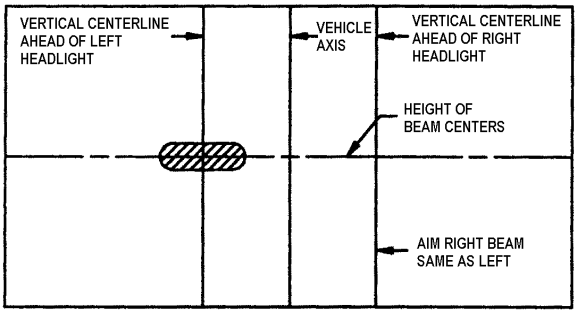

FIGURE 58: HIGH-INTENSITY ZONE (SHADED AREA) OF A PROPERLY AIMED UPPER BEAM ON THE AIMING SCREEN 7.6 M (25FT) IN FRONT OF VEHICLE 06503

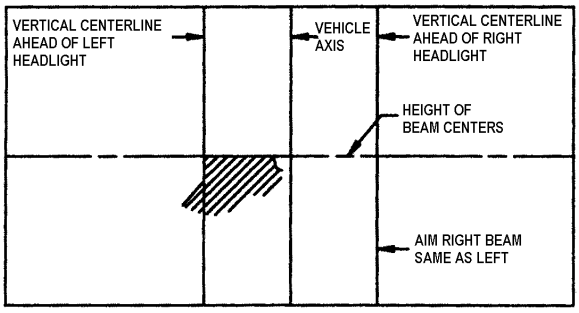

FIGURE 59: HIGH-INTENSITY ZONE (SHADED AREA) OF A PROPERLY AIMED LOWER BEAM ON THE AIMING SCREEN 7.6 M (25FT) IN FRONT OF VEHICLE 06504

7. The inspection limits for high-beam headlights shall be with the center of the high-intensity zone from 10 cm (4 in) up to 10 cm (4 in) down; and, from 10 cm (4 in) left to 10 cm (4 in) right on a screen at 7.6 m (25 ft) (Fig. 60).

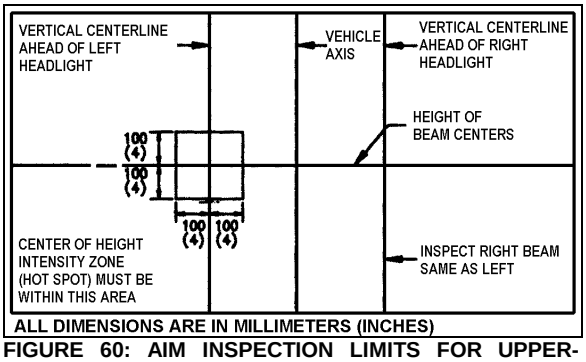

FIGURE 60: AIM INSPECTION LIMITS FOR UPPER-BEAM HEADLIGHTS 06505

8. The inspection limits in the vertical direction for low-beam headlights or the low beam of a dual-beam headlight, shall be as described in Table 1. In the horizontal direction, the left edge of the high-intensity zone shall be located from 10 cm (4 in) left to 10 cm (4 in) right of the vertical centerline of the beam. The viewing screen shall be located 7.6 m (25 ft) in front of the vehicle (Fig. 61).

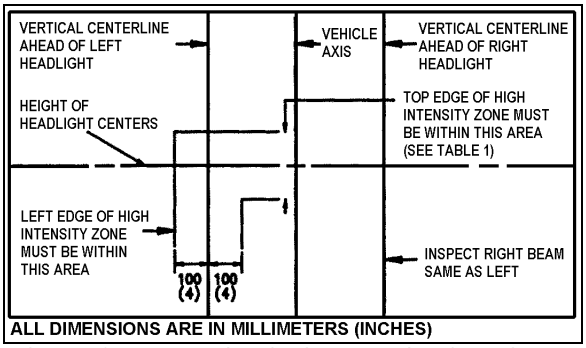

FIGURE 61: AIM INSPECTION LIMITS FOR LOWER-BEAM HEADLIGHTS 06506

13.1.4 Sealed-Beam Unit

Bulb Removal and Replacement

1. Pull the release handle located inside the front service compartment to tilt down the entire bumper assembly.
2. Remove the headlight screw fixing the headlight assembly, then tilt headlight assembly down (Fig. 48 and 49).
3. Remove connector from headlight bulb.
4. Remove the bulb by pushing and rotating it out of the socket.
5. Install the new bulb by reversing the previous procedure.

⚠ CAUTION ⚠

During this step, avoid contacting the bulb with the fingers not to alter the bulb life.

NOTE

Do not disrupt headlight adjustment screws.

Module Replacement

1. Pull the release handle located inside the front service compartment to tilt down the entire bumper assembly.
2. Remove the headlight screw fixing the headlight assembly, then tilt headlight assembly down (Fig. 48 and 49).
3. Remove connector from headlight bulb.
4. Unfasten three metal clips attaching headlight unit to support.
5. Install new module and fasten metal clips.
6. Install wiring connector on back of new sealed beam unit.
7. Tilt headlight assembly up into its housing then secure using fixing screw.

NOTE

Make sure headlight assembly is properly positioned into its housing before securing using fixing screw.

8. Perform alignment procedure.

NOTE

The headlight aim must be checked and adjusted even if it was properly adjusted before the sealed beam unit was replaced.

13.1.5 Front Turn Signal

The front turn signal is part of the front headlight assembly. The turn signal is a sealed unit (LED) located on each front corner and should be replaced as an assembly. Turn signal is visible from both front and side.

Removal and Replacement

1. Pull the release handle located inside the front service compartment to tilt down the entire bumper assembly.
2. Remove the headlight screw fixing the headlight assembly, then tilt headlight assembly down (Fig. 48 and 49).
3. Partially unfasten back plate fixing screws, then remove signal lamp.
4. Remove socket from signal lamp.
5. Install wiring connector on back of new signal lamp then install signal lamp.

6. Fasten back plate fixing screws then tilt headlight assembly up into its housing then secure using fixing screw.

NOTE
Make sure headlight assembly is properly positioned into its housing before securing using fixing screw.

13.1.6 Optional Xenon Headlamp

The outer lamps of each headlight assembly may be equipped with the optional Xenon lamps. These lamps improve visibility and provide better lifespan.

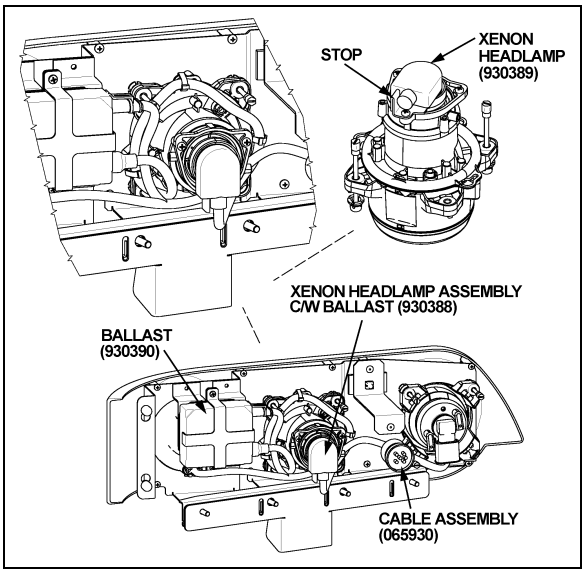

FIGURE 62: XENON HEADLAMP LOCATION 06549

Bulb Removal and Replacement

1. Pull the release handle located inside the front service compartment to tilt down the entire bumper assembly.
2. Remove the headlight screw fixing the headlight assembly, then tilt headlight assembly down (Fig. 48 and 49).
3. Remove main cable connector (066011).
4. Remove connector from headlamp bulb by turning counterclockwise.
5. Unscrew the three Phillips head screws, pull the retainer and bulb out.

⚠ CAUTION ⚠
To avoid breaking the bulb, make sure the socket is in proper position against the stop.

6. Install the new bulb by reversing the previous procedure.

⚠ CAUTION ⚠
During this step, avoid contacting the bulb with the fingers not to alter the bulb life.

NOTE
Do not disrupt headlight adjustment screws.

⚠ CAUTION ⚠
Never connect a voltmeter or V.O.M. to measure bulb voltage as instrument will be destroyed.

Troubleshooting and Safety

When switching on the Xenon headlamp using the rocker switch, a lamp short-circuit test is performed.

Current is detected in the lamp circuit before the ignition time and ignition prevented. Connection of the "hot" lamp to the body mass also prevents ignition. In both cases, the system is cut off within < 0.2 s and can only be restarted via the rocker switch.

In general, the maximum ignition time is < 0.2 s, which period is followed by cutoff. This would happen if a lamp was defected.

Lamp missing: system is cut off after < 0.2 s.

If lamp components or cables are damaged by force (accident) so that contact with hazardous parts is possible, the current in these lines is earthed by the vehicle body and - as with a defective household appliance - switched off when 30 mA are reached within < 0.2 s. the cutoff time is shortened by a more powerful defect current.

To protect the ballast, a counter in the electronic safety system ensures that a defective lamp can only be switched off 7 times consecutively after a successful ignition, after which the device is cut off. This prevents flutter and flashing. This counter is put out of action when the lamp cutoff time repetition interval is longer than 1.3 s so that temporary non-defect disturbances that result in immediate invisible re-ignition do not cause lamp cutoff.

A warning notice on the lamp plug makes you aware of the fact that the lamp is operated in this system on a higher voltage (you should therefore switch off the lamp before working on this part).

After taking out the lamp, the contact pins are in a practically idle state (< 34 Volt) after < 0.5 seconds so that there is no immediate danger of electric shock even if the warning is disregarded.

With this safety concept there is no danger to check the ballast with a new bulb. There is a very high probability that the ballast is OK if the ballast can ignite the bulb.

One simple test to check the ballast would be to measure the Nominal current of 1.58 A after one minute for the 24V ballast.

13.2 STOP, TAIL, DIRECTIONAL, BACK-UP, AND HAZARD WARNING LIGHTS

A combination stoplight, taillight, directional signal light and back-up light assembly is mounted at the rear, on each side of the vehicle. Furthermore, when braking, two center stoplights (LED) and a cyclops light (LED) will illuminate simultaneously with the stoplights on the sides for increased safety. The L.H. and R.H. side center stop lights are also used as directional signal and marker lights.
The stop, tail, directional signal and back-up lights consist of individual LED lights mounted on the engine rear door, and each light is serviced individually as a complete unit. The back-up light uses a regular tungsten bulb.
The hazard warning flashing system uses the front, side and rear directional lights simultaneously. This system is energized by a switch on the L.H. dashboard.

13.2.1 Lamp Removal and Replacement

1. Open engine compartment rear door.
2. Remove the lamp support retaining screws (2), and then from the outside, remove the lamp and its support.
3. From the outside, install the new lamp with its support then fasten the retaining screws.

13.2.2 Center Stoplights and Cyclops Light Removal and Replacement

These (LED) lights are sealed unit and should be replaced as an assembly in accordance with the following procedure:

1. Unscrew both “Phillips” light screws then remove the light assembly.
2. Install new light assembly and secure using screws.

13.3 LICENSE PLATE LIGHT

Two LED units are mounted above the rear license plate(s) of vehicle. In case of burn out, the LED unit must be changed according to the following procedure.

1. Pry out the rubber seal with a small screwdriver. Pull on the LED unit and disconnect it.
2. Reconnect new LED unit, place rubber seal, and press on it until it is seated in position.

13.4 CLEARANCE, IDENTIFICATION AND MARKER LIGHTS

The vehicle is equipped with marker, identification and clearance lights (LED). The clearance lights are mounted at each corner of the coach near the top and the identification lights are in the upper center of rear and front sections.
The rear clearance and identification lights are red and the front ones are amber.
The amber marker lights are mounted along the sides of vehicle.

13.4.1 Marker Light Removal and Replacement

The side marker light is a sealed unit (LED) and should be replaced as an assembly in accordance with the following procedure:

1. Unscrew both *“Phillips”* light screws, and then remove the light assembly.
2. Position the new light assembly and install the “Phillips” screws.

13.4.2 Clearance and Identification Light Removal and Replacement

The clearance and identification light are sealed units (LED) and can be replaced in accordance with the following procedure:

1. Unscrew both “Phillips” light screws, and then remove the light assembly.
2. Position the new light assembly, and then install the “Phillips” screws.

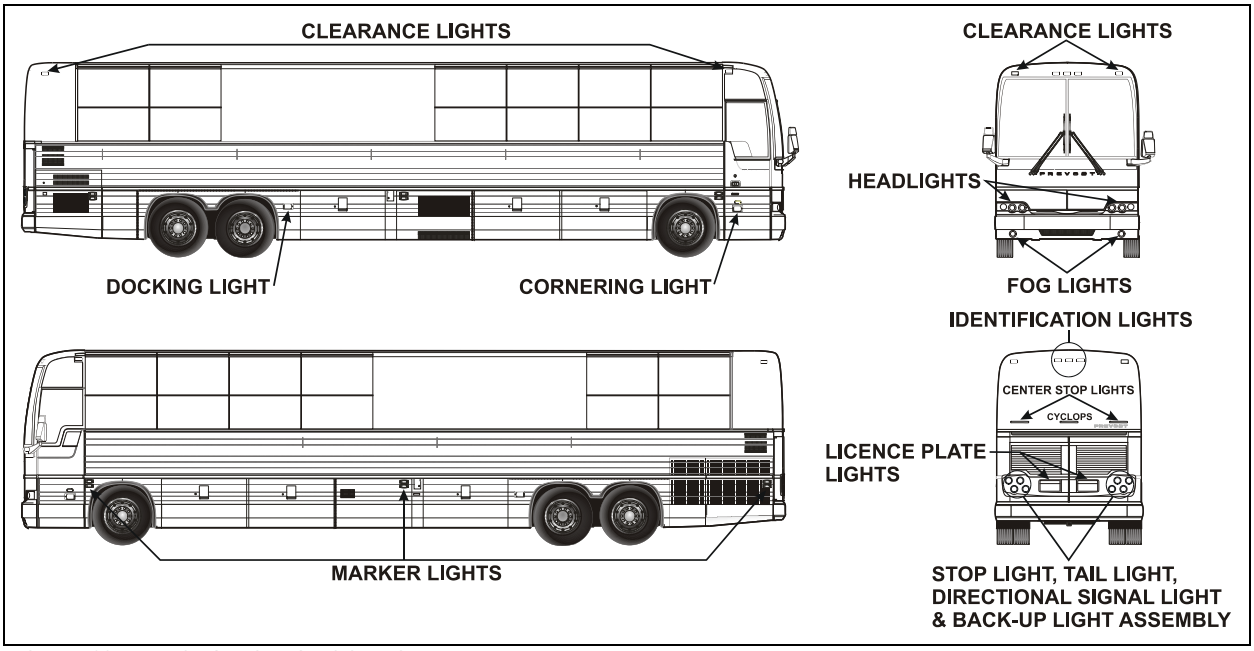

FIGURE 63: VARIOUS LIGHTS LOCATION 06544

13.5 DOCKING AND CORNERING LIGHTS

MTH vehicles are provided with two halogen sealed-beam units that serve as cornering lights. They are mounted on the vehicle as follows: one is mounted on the front L.H. side service compartment door, while the other is located on the entrance door on the R.H. side. The main function of these lights is to increase lateral visibility when turning a corner. These lights are energized simultaneously with the directional lights. A dashboard-mounted rocker switch may be actuated to cancel this system in special situations.

Two additional halogen sealed-beam units may be installed aft of the rear baggage compartment. These lights are used as docking lights and both will illuminate automatically when reverse range is selected to facilitate back-up or docking procedure. The cornering lights do not operate automatically when the reverse range is selected, but by means of a dashboard-mounted rocker switch. When the docking position is selected, the docking as well as the cornering lights illuminate.

13.5.1 Lamp Removal and Replacement

Both docking and cornering sealed-beam units can be changed in accordance with the following procedure:

1. Remove the two “Phillips” screws attaching the retaining ring.
2. Disconnect the light unit connection.
3. Remove the lamp.
4. Position new lamp.
5. Connect and position the light unit.
6. Finally, install the retaining ring.

13.6 FOG LIGHTS

Optional halogen fog lights can be mounted on this vehicle to give the driver better visibility in foggy weather, or to improve the range of vision just ahead of the coach.

13.6.1 Bulb Removal and Replacement

1. Pull on the release handle located in the front service compartment, near the door lower hinge. The bumper will lower gradually.
2. Unscrew the wing nut and pivot assembly upwards.
3. Unscrew the outer ring. Disconnect the light unit connection and remove the bulb.
4. Install the new bulb, reconnect the light unit and replace in its proper position.

⚠ CAUTION ⚠

During this step, avoid contacting the bulb with your fingers. This could alter the bulb life.

5. Reinstall the outer ring, pivot the assembly downwards.
6. Fasten the wing nut and securely close the bumper.

14. INTERIOR LIGHTING EQUIPEMENT

14.1 CONTROL PANEL LIGHTING

The instrument gauges and switches mounted on all control panels are energized whenever the exterior light switch is pushed to the first position. A control dimmer located on the dashboard is used to vary the brightness of the panel gauges, switches and indicator lights.
The gauge lights, panel lights, switch lights and indicator lights have a different bulb arrangement. Thus, the procedure to change a defective bulb can vary according to the application.

14.1.1 Switch Lighting

1. Slightly pull the switch with a defective LED away from the control panel.
2. Disconnect the electric cable from the switch.
3. To install a new switch, reverse the procedure (Fig. 64).

NOTE
Switches are lighted by the use of LED. When lighting on a switch fails, replace defective switch as a unit.

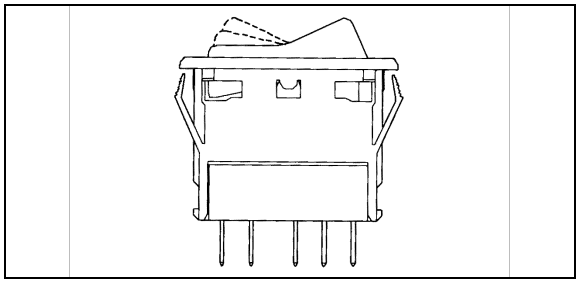

FIGURE 64: SWITCH 06321

14.1.2 Telltale Light Replacement

Telltale module is non-serviceable and must be replaced as a unit.

1. Unscrew and remove the top dashboard panel.
2. Remove the telltale back wire electric connectors.
3. Unscrew and remove the telltale module.
4. To replace the telltale module, reverse the procedure.

14.1.3 Gauge Light Bulb Replacement

1. For any gauge light bulb replacement, the dashboard panel must be removed in order to have access to the rear of gauges.
2. Remove bulb socket from the gauge, turn the defective bulb counterclockwise and pull it out of the gauge.
3. Push a new bulb and socket ASM and turn clockwise to lock in place.
4. Replace the rear dashboard housing.

14.2 STEPWELL LIGHTS (COACHES ONLY)

Two Stepwell lights are illuminated when the door opening system is activated.

14.2.1 Bulb Removal and Replacement

Proceed as follows to replace a defective bulb:

1. Unscrew the two Phillips-head screws retaining the lens to the wall, and remove it.
2. With the light lens removed, pull bulb from the lamp while applying lateral pressure.
3. Install the new bulb into the lamp.
4. Position the light lens and install it.

14.3 LAVATORY NIGHT-LIGHT

The lavatory night-light is illuminated as soon as the ignition switch is set to the *"ON"* position.

14.3.1 Bulb Removal and Replacement

1. Unscrew the two Phillips-head screws retaining the lens to the wall, and remove it.
2. With the light lens removed, pull bulb from the lamp while applying lateral pressure.
3. Install the new bulb into the lamp.
4. Position the light lens and install it

14.4 DRIVER'S AREA LIGHTS

Two halogen ceiling lights are installed over the stepwell and the driver's area. These lights are frequently used for night-time operation when passengers board or leave coach.

14.4.1 Bulb Removal and Replacement

1. Unsnap the lamp with a flat head screwdriver and remove it.
2. Pull the defective bulb out of the socket.
3. Install the new bulb by pushing it in position.

4. Replace the lamp by snapping it back in place.

⚠ CAUTION ⚠

Do not touch halogen bulbs with bare hands as natural oils on skin will shorten bulb life span.

14.5 PASSENGER SECTION LIGHTING

The passenger section of coach is lit by two types of fluorescent tube lamps installed on the parcel racks.
The aisle or indirect lights are located on front of parcel racks, and provide soft, indirect cabin lighting and parcel rack interior lighting. More powerful lighting for general and in-station applications is provided by fluorescent tubes located under the parcel racks, close to the windows. A dual power system is available for this lighting either from the 24 volt vehicle power supply or from a 110 volt outlet supply. In order to save batteries during extended periods of in-station lighting, no current is drawn from the batteries as soon as the 110 volt circuit is connected.

Moreover, adjustable reading lamps are installed under the parcel racks for passenger accommodation.

14.5.1 Fluorescent Tube Replacement

Indirect Fluorescent Light

1. Open the parcel rack access door, if so equipped, unscrew the two Phillips screws (one each end). Let the hinged cover down.
2. Remove fluorescent tube from light socket.
3. Install a new fluorescent tube.
4. Lift the hinged cover and replace the two retaining screws (Fig. 58).

Parcel Rack Interior Lighting

1. Open the parcel rack access door, if so equipped, unscrew the two Phillips screws (one each end). Pull the hinged cover down.
2. Push on the bulb, turn and then, pull it from the socket.
3. Install a new bulb.
4. Lift the hinged cover and replace the two retaining screws.

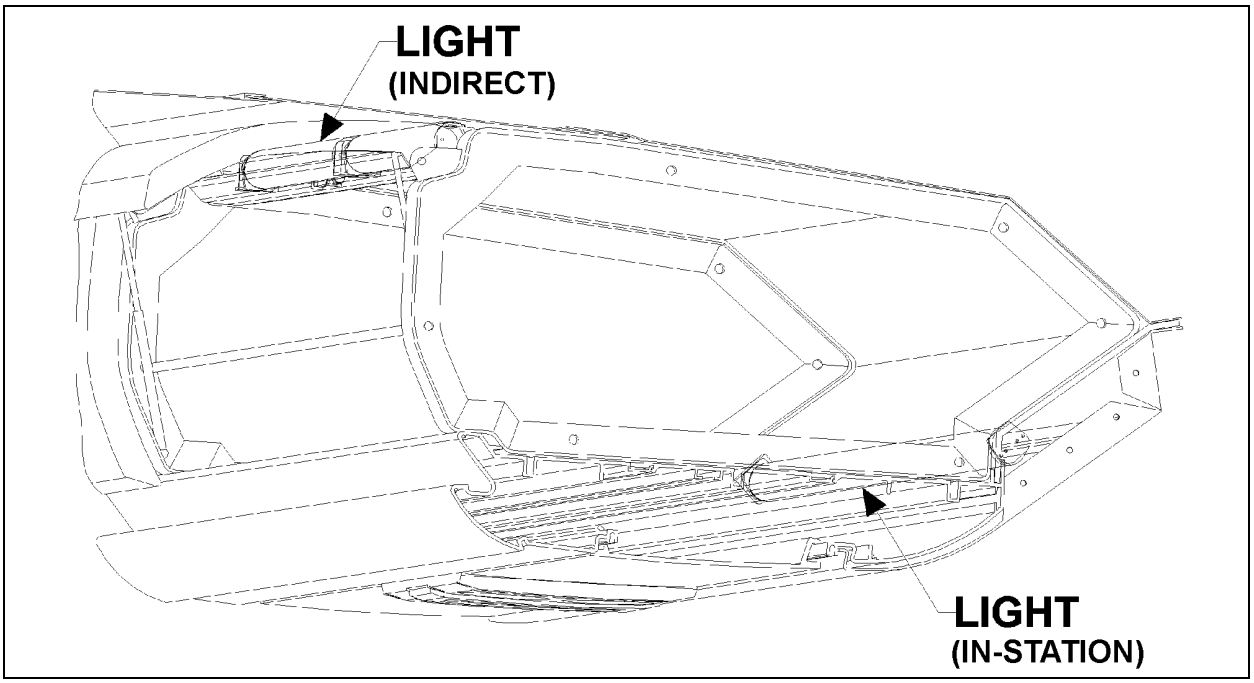

FIGURE 65: PARCEL RACK LIGHTING 06419

14.5.2 Removal and Replacement of In-Station Fluorescent Tubes

1. Start by pulling out the corner of the lens then delicately peeling it out of its seat.

⚠ CAUTION ⚠

The lens is fragile. Be very careful when removing and handling.

2. Rotate and pull the fluorescent tube from its sockets.
3. Install a new fluorescent tube, rotating the tube to secure it in the sockets.
4. Replace the screen lens by first inserting one side in the seat, then push the other side in and snap it in place by running it in from one corner to the next.

14.5.3 Removal and Replacement of Reading Lamp Bulb

1. Engage the tool (#830164) over the lamp and turn one quarter turn counterclockwise. Then, remove the tool slowly.
2. Pull the bulb socket off the reading lamp unit.
3. Push and turn bulb counterclockwise, then pull it out of the socket.
4. Install new bulb in the socket, then push and turn clockwise to lock bulb in position.
5. Push the bulb socket in the reading lamp unit.
6. Position the reading lamp with the tool (#830164), turn one quarter turn clockwise.

14.6 ENGINE COMPARTMENT LIGHTING

A switch located on R.H. side of rear junction box can be used to actuate the two oval engine compartment lights.

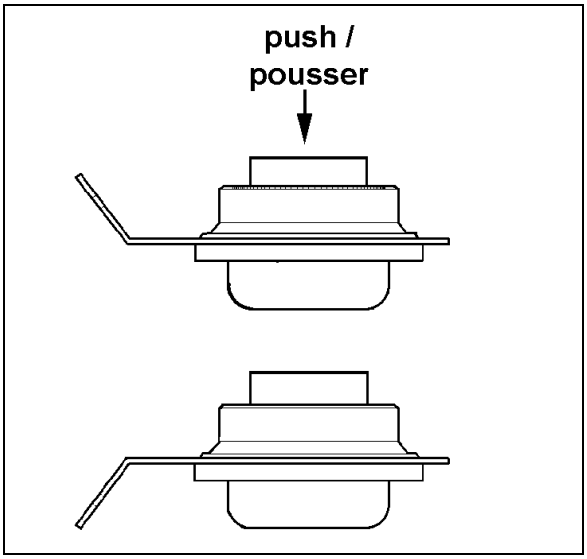

FIGURE 66: ENGINE COMPARTMENT LIGHT

Each light is sealed and can be replaced as follows:

1. Disconnect the light unit connection.
2. Remove the lamp.
3. Position new lamp.
4. Connect the light unit.
5. Make sure the retaining ring is installed properly.

14.7 LAVATORY LIGHT

The halogen lavatory light is installed on ceiling. A microswitch, mounted in the door exterior frame, is activated by the door lock mechanism upon locking to energize the circuit. This switch is readily serviced by removing the two Phillips-head screws securing the mounting plate to the door exterior frame.

Bulb removal and replacement:

1. Unsnap the lamp with a flat head screwdriver and remove it.
2. Pull the defective bulb out of the socket.
3. Install the new bulb by pushing it into position.
4. Replace the lamp by snapping it back in place.

⚠ CAUTION ⚠

Do not touch halogen bulbs with bare hands as natural oils on skin will shorten bulb life span.

15. LIGHT BULB DATA

When replacing a light bulb, special attention must be paid to the voltage rating (refer to light bulb data hereafter).

LIGHT BULB DATA					
APPLICATION	**PREVOST PART NO.**	**TRADE OR SAE NUMBER**	**WATTS OR CANDLE POWER**	**VOLTS**	**QTY**
EXTERIOR LIGHTING					
Hi/Lo-beam	930291	9004	65/45 W	12	2
Lo-Beam Xenon (optional)	930388	D2S	35 W	12	2
Docking & cornering	930319	9415	37.5W	12	4
Fog	930361	H3	55 W	12	2
License plate (sealed)	930266	TL 15206	---	12	2
Marker Light (red)	930340	Grote 47072-3	---	12	2
Marker Light (amber)	930341	Grote 47073	---	12	10
Identification (red)	930334	TL 25420R	---	12	3
Clearance (red)	930334	TL 25420R	---	12	4
Identification (amber)	930337	TL 25450Y	---	12	3
Clearance (amber)	930337	TL 25450Y	---	12	4
Front directional (hazard & marker)	562135	3057	32/3W	12	2
Rear directional	560589	1156	32 W	12	4
Stop	560589	1156	32 W	12	8
Back-up	560589	1156	32 W	12	4
Center stop	930330	HELLA 96208	---	12	2
Cyclops	930330	HELLA 96208	---	12	1

LIGHT BULB DATA					
APPLICATION	**PREVOST PART NO.**	**TRADE OR SAE NUMBER**	**WATTS OR CANDLE POWER**	**VOLTS**	**QTY**
EXTERIOR LIGHTING					
Tail	560123	67	4 W	12	4
Exterior compartment (except engine)	562278	6429	10 W	24	12
Engine compartment	930383	SEALED	25 W	12	2

LIGHT BULB DATA					
APPLICATION	**PREVOST PART NO.**	**TRADE OR SAE NUMBER**	**WATTS OR CANDLE POWER**	**VOLTS**	**QTY**
INTERIOR LIGHTING					
Instrument cluster lights	562838	2721 MFX	---	12	---
Telltale panel assy.	562907	---	---	---	1
Step light (Coaches)	562278	6429	10 W	24	2
Lavatory	830176	Q20MR16	20 W	12	1
Parcel rack	560144	1820	1.6 W	12	A R
Driver's area	830176	Q20MR16	20 W	12	2
"EMERGENCY EXIT" decal	560601	456	2 W	24	A R
"LAVATORY OCCUPIED"	563108	168	3 W	12	1
"WATCH YOUR STEP"	561166	1820	1.6 cp	24	2
Aisle	560141	1251	3 W	24	A R
Reading	563260	303	6 W	24	A R
Fluorescent (In-Station)	830153	F32T8/SP41	32 W	---	A R
Destination sign fluorescent	830120	F30T8CW4	30 W	---	1
Fluorescent (Indirect)	830152	F13T5/CW	13 W	---	A R

16. SPECIFICATIONS

Battery

Make..... Volvo
Model..... 20359831
Type ..... Maintenance-free
Terminal type.....Top Stud
Group size 31
Volts 12
Load test amperage 290
Reserve capacity (minutes)..... 195

Cold cranking (in amps)
-At 0°F (-18°C).....950 (each battery)

Maximum dimensions (inches/mm)
-Length (including flange)..... 13.0/330,2
-Width..... 6.7/169,3
-Height (including top posts)..... 9.3/237,0
-Approximate weight (lbs/kg)..... 59/26,7

* *Battery tester cable clamps should be between terminal nuts and lead pads of terminals. If not possible, load value should be 210 amperes.*

Torque specifications

Battery cable to post.....10-15 Ft-lbs (13-20 Nm)
Battery cover .....45-50 Ft-lbs (5-6 Nm)

Electrical system monitor

Make.....Vanner
Model.....EM-70
Input ..... 24 V dc
System high.....Greater than 30 V dc
System low ..... Less than 24 V dc
Trip level.....+ 0.75 V dc
Prévost Number 562058

Alternator

Make.....Delco Remy
Model Number..... 1117702
Series 50DN
Type 600

Field current at 80°F (27°C)
-Amperes..... 7.2 – 8.0
-Volts 24

Hot output

-Amperes..... 270 at 80°F (27°C) ambient

-Volts 28

-Approximate rpm..... 3000

Ground .....negative

Prévost number..... 561723

Regulator

Make..... Delco-Remy
Model Number.....
Type ..... Transistor
Voltage adjustment.....External screw
Prévost number..... 562775

Alternator

Make..... BOSCH
Model Number..... 0120689552
Series T1

Hot output

-Amperes.....140 at 25°C (AMBIENT)
-Volts 28
-Approximate rpm..... 6000
Ground .....negative
Prevost Number 562752

Battery equalizer

Make.....Vanner
Model..... 60-100D
Amperes..... 100 amps
Prévost Number 563334

Starter

Make..... Mitsubishi Electric Corporation (MELCO)
Model Number.....M009T82479
Type 105P70
Voltage 24
Prévost Number 510752

No-load test
-Volts 23.5
-Max. current draw .....125 amperes
-Min. rpm .....3000 rpm

Starter solenoid

Make..... Mitsubishi Electric Corporation (MELCO)
Model Number..... 1115557
Pull In Voltage .....16 volts max.

SECTION 07: TRANSMISSION

CONTENTS

1. DESCRIPTION 07-3

1.1 ALLISON AUTOMATIC TRANSMISSION 07-3
1.1.1 Retarder (if applicable) 07-3
1.2 ZF-ASTRONIC TRANSMISSION 07-4

2. WELDING PROCEDURES 07-4

3. MAINTENANCE 07-4

3.1 WORLD TRANSMISSION 07-4
3.1.1 Cold Check 07-5
3.1.2 Hot Check 07-5
3.1.3 Readout of the Oil Level Sensor 07-6
3.1.4 Keeping Oil Clean 07-7
3.1.5 Oil Recommendations 07-7
3.1.6 Oil Contamination 07-8
3.1.7 Metal Particles 07-8
3.1.8 Coolant Leakage 07-8
3.1.9 Oil and Filter Change 07-9
3.2 ZF ASTRONIC TRANSMISSION 07-9
3.2.1 ZF ASTRONIC / SACHS Clutch Installation Procedure 07-9

4. INSTALLATION OF ZF OR ALLISON TRANSMISSION BRACKETS 07-11

5. ALLISON TRANSMISSION REMOVAL 07-11

6. TRANSMISSION OIL COOLER REMOVAL 07-12

6.1 TRANSMISSION WITHOUT RETARDER 07-12
6.2 TRANSMISSION WITH RETARDER 07-13

7. CLEANING AND INSPECTION OF THE TRANSMISSION 07-13

7.1 ALLISON AUTOMATIC TRANSMISSION 07-13
7.1.1 Breather 07-14

8. ALLISON TRANSMISSION INSTALLATION 07-14

9. ALLISON TRANSMISSION PRINCIPLES OF OPERATION 07-15

10. TROUBLESHOOTING 07-15

10.1 ALLISON AUTOMATIC TRANSMISSION 07-15
10.1.1 WTEC/Electronic Control Unit 07-15
10.1.2 WTEC/Troubleshooting 07-15
10.1.3 Diagnostic Code Memory 07-16
10.1.4 Reading Codes 07-17
10.1.5 Clearing Codes 07-17

11. ZF-ASTRONIC TRANSMISSION SYSTEM FAULTS AND ERROR MESSAGES 07-30

11.1 SYSTEM FAULTS (ERROR MESSAGES) 07-30

12. SPECIFICATIONS 07-36

ILLUSTRATIONS

FIGURE 1: WORLD TRANSMISSION 07-3
FIGURE 2: WORLD TRANSMISSION CONTROL PAD 07-3
FIGURE 3: ZF-ASTRONIC TRANSMISSION 07-4
FIGURE 4: OIL LEVEL DIPSTICK (AUTO. TRANS.) 07-4
FIGURE 5: COLD CHECK 07-5
FIGURE 6: HOT CHECK 07-5
FIGURE 7: DRAIN PLUG AND FILTERS 07-9
FIGURE 8: RELEASE BEARING RETAINING CLIP 07-10
FIGURE 9: ZF OR ALLISON TRANSMISSION BRACKETS 07-11
FIGURE 10: DETAILS FOR XL2 VEHICLES 07-12
FIGURE 11: ENGINE CRANKING POSITION 07-12
FIGURE 12: MODINE OIL COOLER 07-13
FIGURE 13: COOLER WITH RETARDER 07-13
FIGURE 14: NUT TOLERANCE 07-14
FIGURE 15: AIR PRESSURE REGULATOR (TYPICAL) 07-15
FIGURE 16: WTEC / ELECTRONIC CONTROL UNIT 07-15

1. DESCRIPTION

XL2 Series vehicles may be provided with either an Allison World automatic transmission or a ZF-AsTronic transmission.

1.1 ALLISON AUTOMATIC TRANSMISSION

The B500(R) World Transmission has 6 speeds with two top range (fifth and sixth) overdrives. Total coverage is determined by dividing the highest gear ratio by the lowest gear ratio. Total coverage expresses the transmission gear ratio versatility. Transmissions with larger total coverage number have a wider variety of available ratios.

An electronic control allows the transmission to shift at exactly the right point on the engine's fuel consumption curve for best economy. Early lockup maintains the highest possible mechanical efficiency through the closely-spaced gear steps, culminating in two overdrive ratios. This combination allows progressive shifting techniques, where engine speeds are reduced for higher efficiency and lower fuel consumption.

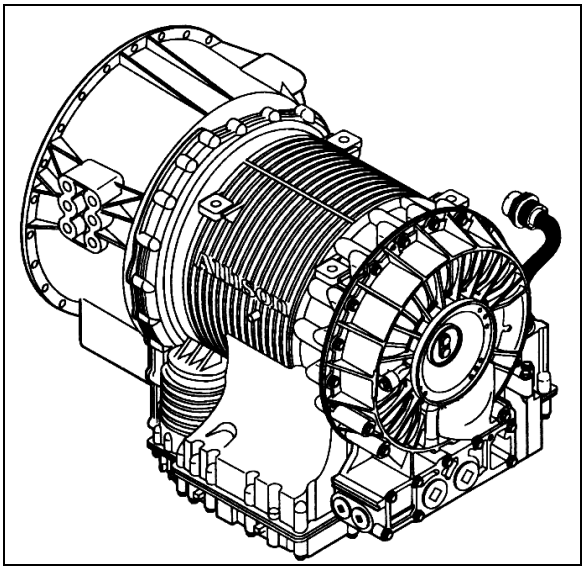

FIGURE 1: WORLD TRANSMISSION 07075

Gear selection and torque converter modes are controlled by a microcomputer-based electronic transmission management system. It is fed information regarding throttle position, operator range selection, engine speed, turbine speed, transmission output speed and various system pressures from special electronic sensors. With this information, it computes shift points and clutch pressures to meet immediate needs. Using closed loop adaptive logic, the electronic control looks at a number of parameters during the shift, and makes minute adjustments to match the shift to desired profile stored in its memory. It then looks at these adjustments and resets the parameters, which allow the transmission to quickly compensate for variations in load, terrain or environment and to adjust for clutch wear and engine power changes. A Diagnostic Data Reader can be connected to the electronic control unit to provide a self-check of all systems in the transmission. Four-digit trouble codes greatly reduce the time it takes to pinpoint potential problems. (Refer to heading *"10. TROUBLESHOOTING"* in this section).

1.1.1 Retarder (if applicable)

This optional auxiliary braking device for the automatic transmission is integrated into the basic envelope of the transmission and transmits its braking force directly to the propeller shaft. It requires no additional length and adds only 75 pounds (34 kg) of weight. Operation of the retarder is controlled electronically by the driver's use of the brake and/or by hand control lever.

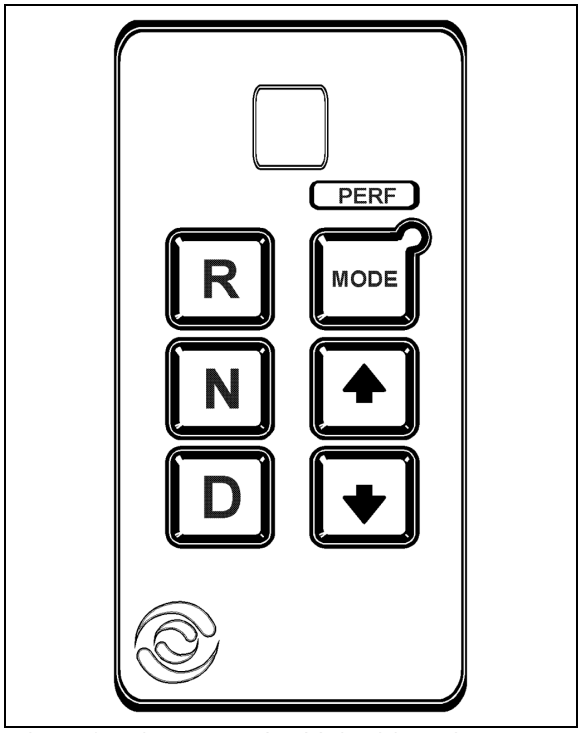

FIGURE 2: WORLD TRANSMISSION CONTROL PAD 07025

When activated, fluid enters a cavity and provides resistance to the turning of rotor blades revolving with the output shaft. This effectively slows the

vehicle to the point where the service brakes are needed only for final stopping. The retarder is fully modulated and is compatible with ABS.

1.2 ZF-ASTRONIC TRANSMISSION

The *AS* TRONIC gear shift system is a combination of an electro-pneumatically shifted constant-mesh gearbox and an automated dry clutch.

If the *AS* TRONIC transmission system is to be used, the vehicle must have an electronic engine control unit as well as CAN communication. Since the clutch is automated (clutch pedal no longer fitted), the driver no longer has to activate the clutch.

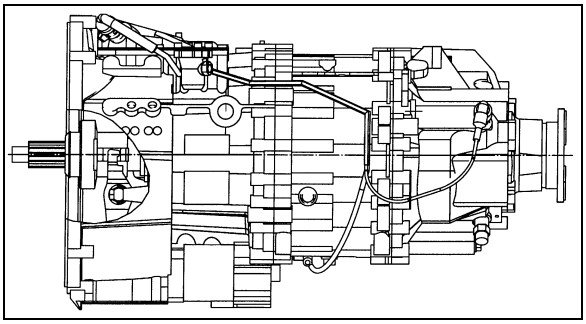

FIGURE 3: ZF-ASTRONIC TRANSMISSION 07078

The actual shift procedure is performed by the electronic transmission control unit. The driver has the option of driving the vehicle in both semi-automatic mode as well as fully automatically. When in semi-automatic mode, manual shifting with the range selector is made easier.

When in fully automatic mode, gears are selected and shifts made by the electronic control unit. The driver can still intervene if he wishes to. All system functions required are shown on the display, e.g. neutral, gear change, clutch overload and diagnosis information.

2. WELDING PROCEDURES

These procedures are intended only for vehicles equipped with transmission electronic controls. When frame or other welding is required on the vehicle, precautions are to be taken to protect the electronic control components. Refer to section 00: GENERAL INFORMATION, paragraph 3: “Precautions to be observed before welding” for complete procedure.

3. MAINTENANCE

3.1 WORLD TRANSMISSION

To gain access to the dipstick, open the engine compartment rear doors; dipstick is located on the radiator side of the engine (Fig. 4).

To check the transmission oil level, a cold check and a hot check must be performed. A cold check must be made between 60ºF (16ºC) and 140ºF (60ºC). The transmission oil temperature gauge indicates the operating temperature; it is located in the MCD dashboard integrated Liquid Crystal Display and can be viewed when selecting the Gauge Mode (refer to ‘’Operator’s Manual’’ for added information).

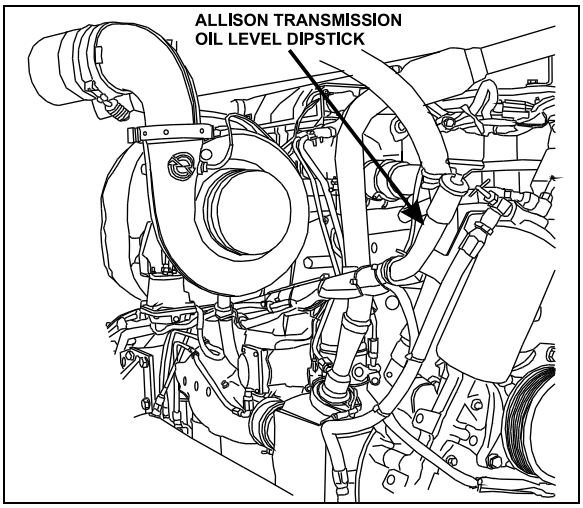

FIGURE 4: OIL LEVEL DIPSTICK (AUTO. TRANS.) 07033

NOTE
Perform the cold check first to verify the transmission oil level before performing the hot check.

The hot check can be performed when the transmission oil reaches the normal operating temperature of 160ºF (71ºC) to 200ºF (93ºC).

Clean all dirt from around the end of the oil filler tube before removing the dipstick. Dirt or foreign matter must not be permitted to enter the oil system since it will cause valves to stick, undue wear of transmission parts, and clogged passages. Check the oil level in accordance with the following procedures and record any abnormal level on your *"Maintenance Records".*

⚠ WARNING ⚠

When checking the oil level, be sure that the parking brake and/or emergency brakes are set and properly engaged, and the wheels are choked. Unexpected and possible sudden vehicle movement may occur if these precautions are not taken.

- **Special care must be taken not to touch the engine coolant tubing and/or exhaust pipe, since this could cause severe burns.**
- **Do not wear loose clothing and, stay away from rotating parts during procedure; personal injury could occur.**

Always check the oil level reading at least twice when the engine is running. Consistency is important in maintaining the accuracy of the reading. If inconsistent readings persist, check the transmission breather to ensure it is clean and free of debris.

3.1.1 Cold Check

The purpose of the **Cold Check** is to determine if the transmission has enough fluid to be operated safely until a **Hot Check** can be made.

1. If the engine has been shut down for an extended period of time, park the vehicle on a level surface and apply the parking brake.

⚠ CAUTION ⚠

The oil level rises as sump temperature increases. DO NOT fill above the "Cold Run" band if the transmission oil is below normal operating temperature.

2. Run the engine for at least one minute. Shift to Drive (D) and operate the engine for 30 seconds at 1000-1500 rpm; then shift to Reverse (R) to clear the hydraulic system of air. Finally shift to Neutral (N) and allow the engine to idle (500 - 800 rpm).
3. While the engine is running, remove the dipstick from the tube and wipe it clean (Figs. 5 & 6).

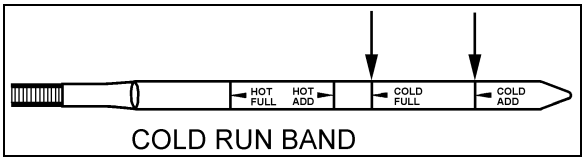

FIGURE 5: COLD CHECK 07050

4. Insert the dipstick into the tube and then remove, checking the oil level reading (Fig. 5). Repeat the check procedure to verify the reading. If the oil reading is within the "Cold Run" band, the level is satisfactory for operating the transmission until the oil is hot enough to perform a "Hot Run" check. If the oil reading is not within the "Cold Run" band, add or drain oil as necessary to bring the level within the "Cold Run" band.
5. Perform a **Hot Check** at the first opportunity after the normal operating temperature of 160ºF (71ºC) to 200ºF (93ºC) is attained.

⚠ CAUTION ⚠

An accurate fluid level check cannot be made unless the engine is idling (500-800 rpm) in Neutral, the transmission fluid is at the proper temperature, and the vehicle is on a level surface.

3.1.2 Hot Check

⚠ CAUTION ⚠

The oil must be hot to ensure an accurate check for this procedure. The oil level rises as temperature increases.

1. Operate the transmission in Drive (D) range until normal operating temperature is reached 160ºF (71ºC) to 200ºF (93ºC).
2. Park the vehicle on a level surface and shift to Neutral (N). Apply the parking brake and allow the engine to idle (500 - 800 rpm).
3. While the engine is running, remove the dipstick from the tube and wipe it clean.
4. Insert the dipstick into the tube and then remove, checking the oil level reading. Repeat the check procedure to verify the reading.

The safe operating level is anywhere within the "Hot Run" band on the dipstick (Fig. 6).

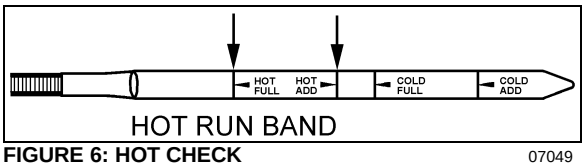

FIGURE 6: HOT CHECK 07049

If the oil level is not within the "Hot Run" band, add or drain oil as necessary to bring the oil level within the band.

NOTE
The Cold Check is more appropriate for verifying the oil level after the first fill-up. In case of conflict, the Hot Check has priority over the Cold Check; the automatic system of verification via the shift selector has priority over the Hot Check.

3.1.3 Readout of the Oil Level Sensor

The optional Oil Level Sensor (OLS) is designed to measure transmission oil level only when the following combination of operating conditions exists:

1. Engine must be at idle;
2. **NEUTRAL** must be selected;
3. Zero output speed;
4. Transmission oil must be within a "normal" temperature band (160-250°F; 70-120°C), and;
5. Once the first four (4) conditions are met, there must be a "waiting" period (approx. 2 min., to facilitate consistent oil drainback) before oil level measurement begins.

To enter OLS readout mode (after meeting the conditions noted above), simultaneously press the UPSHIFT and DOWNSHIFT arrows on the shifter. If the five (5) conditions noted above are present, the display will immediately enter the reading mode. If the "waiting" period has not elapsed, the left digit of the display will become a "chasing" digit and the right digit will count down from (8) to (1) until the waiting period is complete.

After attaining the reading mode, the display will flash *"OL-OK"*, *"LO-01"*, *"HI-02"*, etc., where the suffix *"01"* or *"02"* indicates the volume of oil (in quarts) either low or high.

At any time in this sequence, simultaneously pressing the UPSHIFT and DOWNSHIFT arrows directs the ECU to enter the transmission diagnostic mode as described under *"10. Troubleshooting"* in this section.
D, N, or R may also be selected on the shifter at any time - the OLS mode will abort and normal transmission will commence. Shifts are not inhibited.

Oil Level Sensor (OLS) Codes

CODE	CAUSE OF CODE
OL-OK	Oil Level Is Correct
LO-01	One Quart Low
LO-02	Two Quarts Low
HI-01	One Quart High
HI-02	Two Quarts High
OL-50	Engine Speed (RPM) Too Low
OL-59	Engine Speed (RPM) Too High
OL-65	Neutral Must Be Selected
OL-70	Sump Oil Temperature Too Low
OL-79	Sump Oil Temperature Too High
OL-89	Output Shaft Rotation
OL-95	Sensor Failure

3.1.4 Keeping Oil Clean

Oil must be handled in clean containers, fillers, etc., to prevent foreign material from entering the transmission. Place the dipstick on a clean surface area while filling the transmission.

⚠ CAUTION ⚠
Containers or fillers that have been used to handle antifreeze or engine coolant must NEVER be used for handling transmission fluid. Antifreeze and coolant solutions contain ethylene glycol that, if introduced into the transmission, can cause the clutch plates to fail.

3.1.5 Oil Recommendations

Hydraulic oils used in the transmission have an important influence on transmission reliability and durability. In order of preference Castrol TranSynd Synthetic Fluid, DEXRON-III/VI, MIL-L-2104D, and type C-4 oils (Allison approved SAE 10W or SAE 30) are recommended. Type C-4 oil is the only oil approved for use in off-highway applications. Use type SAE 30 where ambient temperature is consistently above 86ºF (30ºC). Some DEXRON-III/VI oils are also qualified as type C-4 oils and may be used in off-highway applications. However, a DEXRON-III/VI fluid which is not qualified type C-4 oil must never be used in off-highway applications. Consult your local Allison dealer or distributor to determine if DEXRON-III/VI oil is also qualified type C-4 oil.
Before using type C-4 oils, consult the vehicle manufacturer to ensure that materials used in tubes, hoses, seals, etc., are compatible with type C-4 oils. Also, consult your local Allison dealer or distributor to determine if the oil you have selected is approved type C-4 oil. Ford Motor Company specification oils M2C33-F, M2C138-CJ and M2C166-H may be used and may be intermixed with DEXRON-III/VI oil.

OIL SPECIFICATIONS AND AMBIENT TEMPERATURE OPERATING CONDITIONS	
Oil type	Ambient temperature
MIL-L-2104D, DEXRON-III/VI, TranSynd TES 295, C-4	120ºF (48ºC) to -25ºF (-32ºC)
MIL-L-46167	-25ºF (-32ºC) to -60ºF (-51ºC)

The use of an arctic preheat kit is recommended at temperatures below -25ºF (-32ºC). If a preheat kit is not available, the ECU will restrict full operation until the sump temperature is increased. The chart below shows the temperature ranges in which the transmission will operate. It should be noted that at lower sump temperature, the transmission's operation may be restricted.

Transmission Oil Temperature	**"DO NOT SHIFT" Light**	**Operation**
Below -26ºF (-32ºC)	ON	Neutral only
-24ºF (-31ºC) to +19ºF (-7ºC)	OFF	Start with neutral and reverse, normal upshifts
+20ºF (-6ºC) to 260ºF (126ºC)	OFF	Full operation in all ranges
Above 260ºF (126ºC)	ON	Inhibits 5th and 6th ranges

3.1.6 Oil Contamination

At each oil change, examine the drained oil for evidence of dirt or water. A nominal amount of condensation will emulsify during operation of the transmission. However, if there is evidence of water, check the cooler (heat exchanger) for other signs of leakage. This, however, may also indicate leakage from the engine oil system.

3.1.7 Metal Particles

Metal particles in the oil (except for minute particles normally trapped in the oil filter) indicate damage has occurred in the transmission. When these particles are found in the sump, the transmission must be disassembled and closely inspected to find the source. Metal contamination will require complete disassembly of the transmission and cleaning of all internal and external circuits, coolers, and all other areas where the particles could lodge.

⚠ CAUTION ⚠

If excessive metal contamination has occurred, replacement of the oil cooler and replacement of all bearings within the transmission is recommended.

3.1.8 Coolant Leakage

If engine coolant leaks into the transmission oil system, immediate action must be taken to prevent malfunction and possible serious damage. The transmission must be completely disassembled, inspected, and cleaned. All traces of the coolant contamination must be removed. Friction clutch plates contaminated with ethylene glycol must be replaced.

TABLE 1: Recommended Fluid and Filter Change Intervals (Non-TranSynd™/Non-TES 295/Mixture)

Coaches or MTH equipped with retarder				Coaches or MTH without retarder			
Fluid	**Filters**			**Fluid**	**Filters**		
	Main	**Internal**	**Lube/ Auxiliary**		**Main**	**Internal**	**Lube/ Auxiliary**
	Initial Break-in 5,000 miles (8,000 km)				**Initial Break-in** 5,000 miles (8,000 km)		
12,000 Miles (20 000 km) 6 Months	12,000 Miles (20 000 km) 6 Months	Overhaul	12,000 Miles (20 000 km) 6 Months	25,000 Miles 40 000 km 12 Months	25,000 Miles 40 000 km 12 Months	Overhaul	25,000 Miles (40 000 km) 12 Months

TABLE 2: Recommended Fluid and Filter Change Intervals (TranSynd™/TES 295 Approved Fluid)

2 inch Control Module (1.75 approximately) – Requires filter kit P/N 29540493

Coaches or MTH equipped with retarder				Coaches or MTH without retarder			
Fluid	**Filters**			**Fluid**	**Filters**		
	Main	**Internal**	**Lube/ Auxiliary**		**Main**	**Internal**	**Lube/ Auxiliary**
	Initial Break-in 5,000 miles (8,000 km)				**Initial Break-in** 5,000 miles (8,000 km)		
50,000 Miles (80 000 km) 24 Months	50,000 Miles (80 000 km) 24 Months	Overhaul	50,000 Miles (80 000 km) 24 Months	150,000 Miles 240 000 km 48 Months	50,000 Miles 80 000 km 24 Months	Overhaul	50,000 Miles (80 000 km) 24 Months

3.1.9 Oil and Filter Change

Allison transmissions are now factory fill with TranSynd fluid. Oil change must be performed with the vehicle on a flat and level surface and with parking brake applied. Oil and oil filter change frequency is determined by the severity of service and operating conditions of the transmission and by the filter equipment installed. See *"Table 1 and 2"* for oil and filter change intervals. More frequent changes may be required when operations are subject to high levels of contamination or overheating.

The procedure for changing the transmission oil and oil filters is as follows:

Drain

1. The transmission should be at an operating temperature of 160ºF (71ºC) to 200ºF (93ºC) when the oil is drained. This will ensure quicker and more complete fluid drainage.

NOTE
Remove transmission protective panel located underneath transmission for easier access.

2. Remove the drain plug from under the transmission (Fig.7) and allow the oil to drain into a suitable container. Check the condition of the oil as described previously.
3. To replace the integral filters, remove twelve bolts (6 on each cover), two filter covers, two O-rings, two square cut seals and the two filters from the bottom of the control module (Fig. 7).
4. To install filters, pre-lube and install the two O-rings, the two square cut seals followed by the filters (lube the O-ring in filter cartridge only) into the filter compartment. Index each filter/cover assembly to holes in channel plate/sump. Push the cover assembly in by hand to seat the seals.

⚠ CAUTION ⚠
Do not use bolts to draw the cover to sump. This can damage the cover, seal, or sump.

5. Install twelve bolts and both covers, and then tighten to 38-45 lbf-ft (51-61 Nm).
6. Inspect the drain plug and O-ring. Replace if necessary. Reinstall the drain plug and tighten to 18-24 lbf-ft (25-32 Nm).
7. Reinstall transmission protective panel

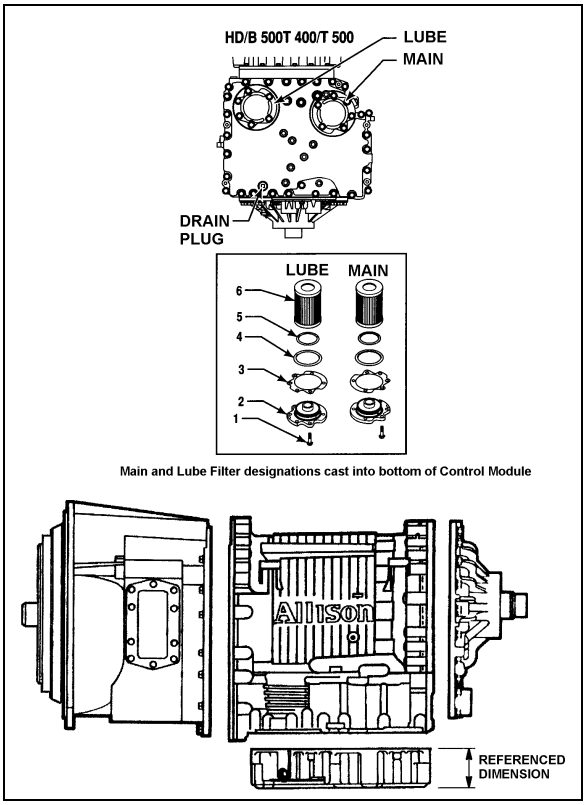

FIGURE 7: DRAIN PLUG AND FILTERS 07074

Refill

Using the oil level dipstick filler tube, refill with 24 US qts (23 liters) [28 US qts (26.5 liters) if equipped with retarder] and check the oil level using the previously described procedure. The refill amount is less than the initial filling because some of the oil remains in the external circuits and transmission cavities.

3.2 ZF AS-TRONIC TRANSMISSION

All information needed for the removal /installation or maintenance of the ZF transmission is included in the documents annexed at the end of this section.

3.2.1 ZF AS-TRONIC / SACHS Clutch Installation Procedure

Important Note:

The clutch hub splines, input shaft, release bearing, clutch fork, and clutch push rod ends all come pre-lubed from the factory.

- Clean the flywheel, clutch disc, and pressure plate surfaces, removing any grease prior to assembly.

- Slide the clutch disk onto the transmission input shaft to check for smooth engagement. Remove clutch disk.
- Apply a very thin coating of Optimol Olista Longtime synthetic grease to the transmission input shaft. Slide the clutch disk along the full length of the input shaft to transfer grease to the clutch hub splines. Remove clutch disc, and remove any excess grease from the exterior of the clutch disc hub. **It is very important that no excess grease is left on the exterior of the clutch hub or clutch disk!**
- Install two temporary pilot studs (7/16-14, 3" long), placing them on the same diameter, 180^0 apart. These are used to aid in the alignment of the clutch pressure plate.
- Verify that the pilot bearing is seated properly in the flywheel. Insert a clutch alignment tool (SAE 2" DIA, 10 Spline) through the clutch disc and into the pilot bearing. PLEASE NOTE: the direction matters – the large side of the hub should face the clutch pressure plate. The clutch disc hub should be marked "flywheel side" – this side should face the flywheel.
- Use the clutch alignment tool to keep the clutch disc in the proper position and align the clutch cover with the two studs. Push the cover in place in the direction of the flywheel and start installing the clutch bolts. Use Lock-Tite for each bolt. Install, but do not torque, the 10 bolts. Remove the two pilot studs and in their place install the remaining 2 bolts.
- When the bolts are hand tight, be sure that the clutch cover fits into the flywheel centering ring. Tighten each bolt a little at a time, in a crisscross pattern, until the pressure plate cover contacts the flywheel face. Once the cover has touched the face of the flywheel, torque the clutch bolts to 55 ft-lbs, again in a crisscross fashion.
- Remove the clutch alignment tool. If the installation was successful, it should slide out smoothly.
- Ensure that the release bearing retaining clip (located on the "fingers" of the pressure plate) is closed. Refer to figure 8.
- Remove the Clutch Inspection Cover from the bottom of the transmission.
- The transmission should have been shipped in gear. This will allow the installer to rotate the output shaft in order to align the input shaft with the clutch disc hub. If the transmission is in neutral, a "strap wrench" (with a rubber or leather strap) can be used to align the input shaft. Do not use a wrench of the "chain" variety, as damage to the input shaft may result. When aligned, push the transmission towards the engine. Be sure that the bell housing contacts the flywheel housing.

Warning!

- Insure that the transmission moves in a straight line. It can very easily go off center relative to the clutch disc and pilot bearing.
- Insure that the bell housing interfaces evenly with the flywheel housing. Even surface contact should be attained before tightening bolts.
- Do not try to correct relative position of the bell housing and flywheel housing by pulling the transmission into place with the bell housing bolts. The transmission bell housing should seat into the flywheel housing freely.
- When the bell housing and flywheel housing surfaces and bolt holes are aligned, install the transmission bolts. Only hardened steel flat washers should be used, **SERRATED LOCK WASHERS ARE NOT ALLOWED**. Torque the transmission bolts to 55 ft-lbs. in a crisscross fashion.
- From underneath, push the clutch release bearing forward (in the direction of flywheel) using the release fork. Use force to snap the bearing into the retaining clip located on the "fingers" of the pressure plate. The installer should be able to both hear and feel the bearing seat into place. Refer to figure 8.

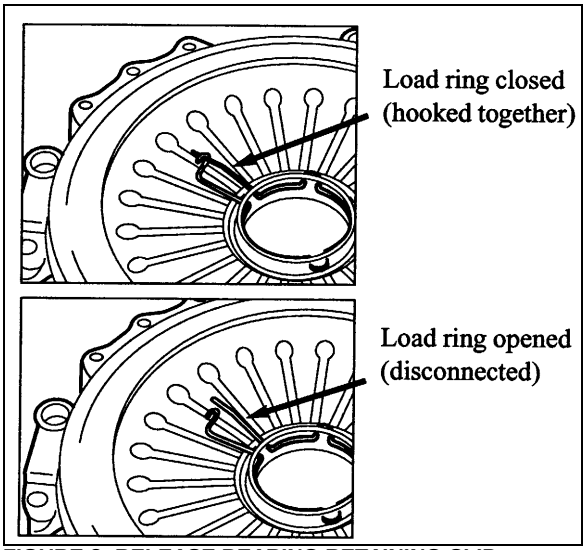

FIGURE 8: RELEASE BEARING RETAINING CLIP 07112

- Install the Clutch Actuator inspection cover.
- The clutch/transmission installation is now complete.

4. INSTALLATION OF ZF OR ALLISON TRANSMISSION BRACKETS

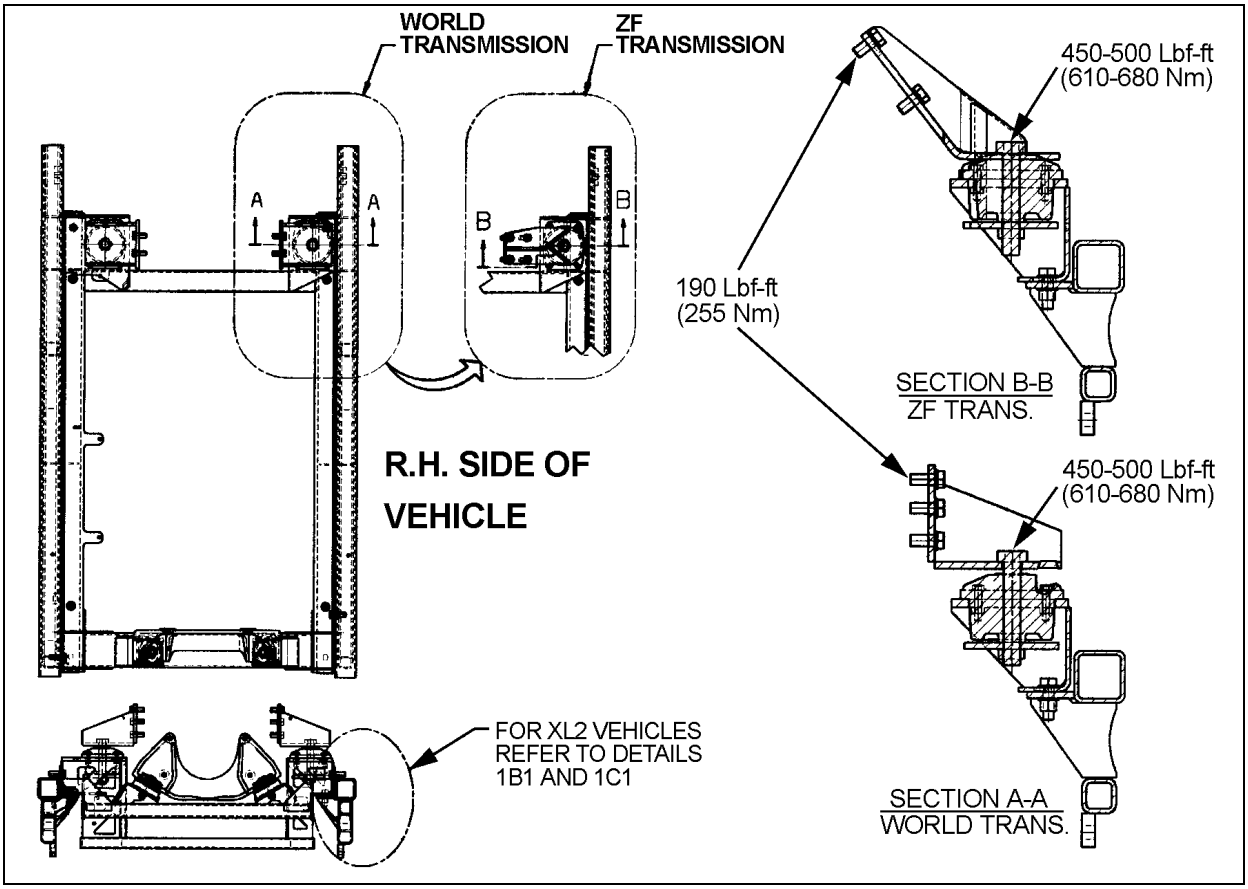

FIGURE 9: ZF OR ALLISON TRANSMISSION BRACKETS 07115

5. ALLISON TRANSMISSION REMOVAL

The following procedure deals with the removal of the Allison transmission without removing the power plant cradle from vehicle. The methods used to support the transmission and engine depend upon conditions and available equipment.

1. Select transmission's "NEUTRAL" position, apply parking brake, then set battery master switch to the "OFF" position.
2. Jack up vehicle, then place safety supports underneath body.

⚠ CAUTION ⚠

Only the recommended jacking points must be used as outlined in Section 18, "BODY".

NOTE

For more clearance between the tag axle and transmission, the tag axle may be unloaded and jacked up or retracted (if applicable).

3. Remove engine splash guards and protective panels surrounding transmission.
4. Remove cross member from under transmission.
5. Remove the transmission drain plug and allow oil to drain. Inspect the drain plug washer and replace it if necessary. Reinstall the drain plug and tighten to 33-41 lbf-ft (45-56 Nm) (see *"3.2.9 Oil and Filter Change"* in this section.

⚠ WARNING ⚠

It is better to drain oil when it is still warm. Avoid contact with oil since it can be very hot and cause personal injury.

6. Remove transmission dipstick and filler tube.
7. Disconnect propeller shaft from transmission and remove its safety guard. Refer to Section 09, *"PROPELLER SHAFT".*
8. Disconnect the two oil cooler hoses from transmission. Cover hose ends and fittings to prevent fluid contamination.

⚠ WARNING ⚠

A significant amount of oil may drain from oil lines when they are disconnected.

9. Disconnect all sensors on L.H. side of the transmission.
10. Disconnect main wiring harness.
11. Disconnect the air supply line (steel-braided hose) from retarder control valve (if applicable).
12. Remove any locking tie, clamp and bracket that may interfere with the removal of transmission.
13. Support transmission using a suitable transmission jack.
14. Remove the access plug from the flywheel housing on the R.H. side below starter. From access plug, remove the 12 converter-to-flexible plate attaching screws. Cranking the engine to gain access to the attaching screws may be done by turning the crankshaft pulley using a suitable adapter (fig. 11).

⚠ CAUTION ⚠

Do not rotate alternator shaft clockwise to avoid removing tension on belt.

15. Remove the 12 screws retaining the torque converter housing to the flywheel housing.

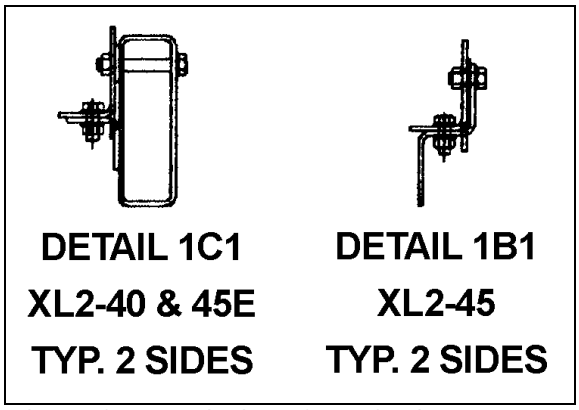

FIGURE 10: DETAILS FOR XL2 VEHICLES 07116

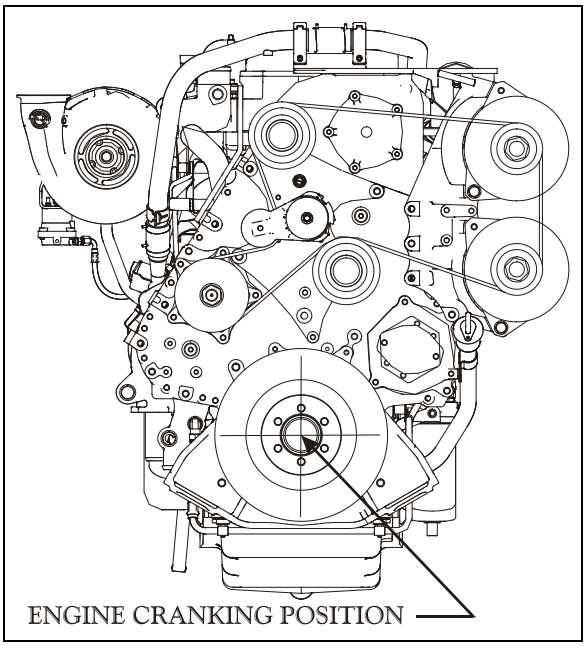

FIGURE 11: ENGINE CRANKING POSITION 01153

⚠ CAUTION ⚠

Make sure transmission-to-engine alignment is maintained when removing screws to avoid damaging torque converter housing.

16. Remove the transmission rubber mount above transmission by removing the nut, bolt and washer over the rubber and its support. Remove the bracket from transmission (only if the vehicle is equipped with a retarder).
17. Slowly pull transmission straight out to clear the engine.
18. Remove the transmission.

6. TRANSMISSION OIL COOLER REMOVAL

6.1 TRANSMISSION WITHOUT RETARDER

Stop engine and allow engine to cool. Close both heater line shutoff valves (refer to Section 05 *"Cooling"*).

To drain the cooling system, proceed as per Section 05 *"Cooling"*, paragraph 5: Draining. If the cooling system is contaminated, flush system as per Section 05 *"Cooling"*, paragraph 7: Flushing.

1. Disconnect and remove the engine air intake duct mounted between the air cleaner housing and the turbocharger inlet.

⚠ CAUTION ⚠

To avoid damage to turbocharger, cover the turbocharger inlet opening to prevent foreign material from entering.

2. Disconnect the two transmission hoses from oil cooler. Cover hose ends and fittings to prevent fluid contamination.

⚠ WARNING ⚠

A significant amount of oil may drain from oil lines when they are disconnected.

3. Unfasten the constant-torque hose clamps and remove the two hoses.

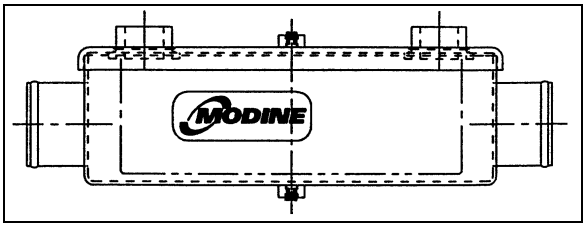

FIGURE 12: MODINE OIL COOLER 07072

4. Unscrew the four holding nuts and remove the U-bolts, remove the oil cooler from engine compartment.
5. Reinstall transmission oil cooler by using reverse procedure.

6.2 TRANSMISSION WITH RETARDER

Stop engine and allow engine to cool. Close both heater line shutoff valves (refer to Section 05 *"Cooling"*).

1. To drain the cooling system, proceed as per Section 05 *"Cooling"*, paragraph 5: Draining. If the cooling system is contaminated, flush system as per Section 05 *"Cooling"*, paragraph 7: Flushing.
2. Disconnect and remove the engine air intake duct mounted between the air cleaner housing and the turbocharger inlet.

⚠ CAUTION ⚠

To avoid damage to turbocharger, cover the turbocharger inlet opening to prevent foreign material from entering.

3. Disconnect the transmission hoses from oil cooler. Cover hose ends and fittings to prevent fluid contamination.

⚠ WARNING ⚠

A significant amount of oil may drain from oil lines when they are disconnected.

4. Unfasten the constant-torque hose clamps and remove the two hoses.
5. Unscrew the holding bolts and nuts and remove the oil cooler from engine compartment.

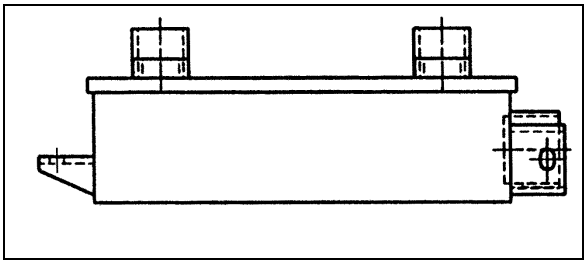

FIGURE 13: COOLER WITH RETARDER 07073

6. Reinstall transmission oil cooler by using reverse procedure.

7. CLEANING AND INSPECTION OF THE TRANSMISSION

7.1 ALLISON AUTOMATIC TRANSMISSION

The exterior of the transmission should be cleaned and inspected at regular intervals. The length of service and severity of operating conditions will determine the frequency of such inspections. Inspect the transmission for:

1. Loose bolts (transmission and mounting components);
2. Oil leaks (correct immediately);
3. Loose, dirty, or improperly adjusted throttle sensor linkage;
4. Damaged or loose oil lines;
5. Worn or frayed electrical harnesses, improper routing;
6. Worn or out of phase drive line U-joint and slip fittings.

⚠ CAUTION ⚠

DO NOT pressure wash the transmission electrical connectors. Water and detergent will cause the contacts to corrode or become faulty.

7.1.1 Breather

The breather is located on the engine, flywheel side near the valve cover. It serves to prevent pressure build-up within the transmission and must be cleaned to keep the passage opened. The prevalence of dust and dirt will determine the frequency at which the breather requires cleaning. Use care when cleaning the engine. Spraying steam, water or cleaning solution directly at the breather can force the water or solution into the transmission. Always use care when removing the hose connector from transmission to prevent the entry of foreign matter.

8. ALLISON TRANSMISSION INSTALLATION

NOTE
For more clearance between the tag axle and transmission, the tag axle may be unloaded and jacked up, or retracted (if applicable).

1. With the access plug removed, align one of the 12 attaching screw holes in the flexible plate with the access opening (starter side).
2. Place the transmission on a transmission jack.
3. Install a headless guide bolt into one of the 12 threaded holes for flexible plate attaching screws in the flywheel.
4. Lubricate the flywheel center pilot boss with molybdenum disulfide grease (Molycote G, or equivalent).
5. Raise transmission and position the flywheel pilot boss into the flexible plate adapter. Align the guide bolt previously installed in the flywheel with the flexible plate hole facing the access opening in the flywheel housing.

⚠ WARNING ⚠
Severe damages and/or personal injury can occur if transmission is not adequately supported.

6. Seat the transmission against the engine flywheel housing. NO FORCE IS REQUIRED. If interference is encountered, move the transmission away from engine, then investigate the cause.

⚠ CAUTION ⚠
The torque converter housing must be seated against the flywheel housing prior to tightening any screws. DO NOT USE SCREWS TO SEAT THE HOUSING.

7. Start all torque converter housing screws, and then tighten four of them gradually and in a criss-cross sequence around the housing. Tighten the 12 remaining screws. Recommended torque is between 42-50 lbf-ft (57-68 Nm).

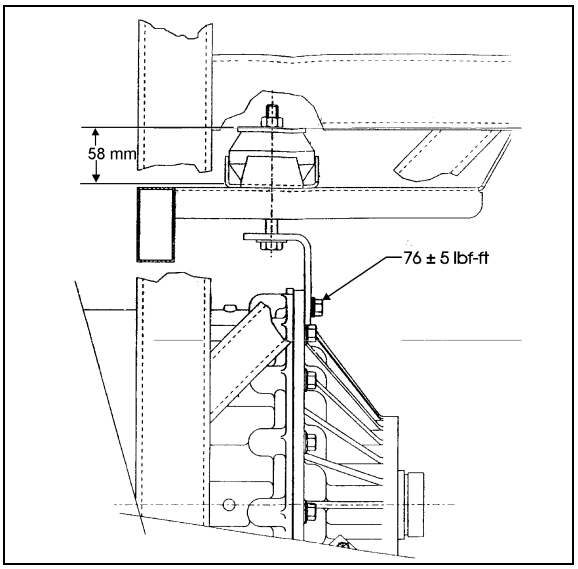

FIGURE 14: NUT TOLERANCE 07014

8. Remove the guide bolt through the access opening in the flywheel housing. Replace it with a self-locking screw, finger-tighten then start the remaining screws; tighten to 17-21 lbf-ft (23-28 Nm). Place a wrench on the crankshaft pulley attaching screw to turn the converter to gain access to the threaded holes.
9. Reinstall the access plug.
10. If the vehicle is equipped with a retarder; install the bracket on the transmission and tighten the bolt to 71-81 lbf-ft (96-110 Nm). Install the transmission rubber mount between the rubber support and the frame with a bolt, nut and washer. Tighten the nut until the tolerance of 58 ± 2 mm is met (Fig. 14).
11. Remove jack from under transmission.
12. Connect all sensors.
13. Connect the main wiring harness.
14. Connect the air supply line (steel-braided hose) to the retarder control valve (if applicable).
15. Connect the two transmission oil cooler hoses as they were previously.

16. Reinstall clamps and brackets, and replace locking ties previously removed during removal procedure.
17. Install propeller shaft and its safety guard. Refer to Section 09, *"PROPELLER SHAFT".*
18. Install transmission dipstick and filler tube.
19. Install cross member under transmission.
20. Install engine splash guards.
21. Adjust the retarder pressure to 80 ± 3 psi with the air pressure regulator. For more information refer to Section 12, *"BRAKE AND AIR SYSTEM*", under heading *"AIR PRESSURE REGULATOR".* The air pressure regulator is located at back of engine compartment, on R.H. side (Fig. 15) or in the R.H. side rear service compartment.
22. Make sure that the drain plug is in place, and then remove the transmission dipstick and pour approximately 24 US quarts (23 L) of automatic transmission fluid through the filler tube. Check and adjust oil level.

⚠ CAUTION ⚠

Do not overfill the transmission. Overfilling can cause oil aeration (milky appearance) and overheating. If overfilling occurs, drain oil as required to bring it to the proper level.

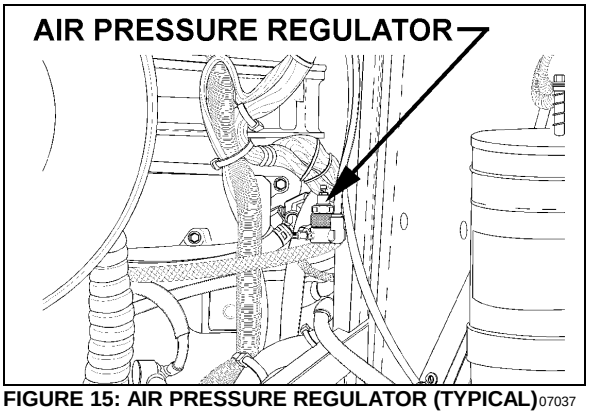

FIGURE 15: AIR PRESSURE REGULATOR (TYPICAL) 07037

9. ALLISON TRANSMISSION PRINCIPLES OF OPERATION

Refer to *"Allison Transmission, MD Series, Principles of Operation, SA 2454".*

10. TROUBLESHOOTING

10.1 ALLISON AUTOMATIC TRANSMISSION

Refer to “Allison Transmission, MD Series, Troubleshooting Manual, SA 2158A”.

10.1.1 WTEC/Electronic Control Unit

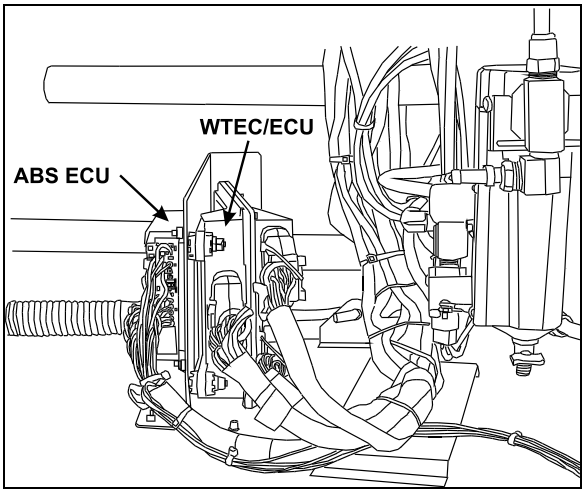

FIGURE 16: WTEC / ELECTRONIC CONTROL UNIT 07075

The ’’World’’ automatic transmission has a new Electronic Control Unit (ECU) which involves specific diagnostic incident codes. The ECU transmission unit is located in the coach front service compartment.

WTEC/ECU Replacement

The automatic transmission ECU is a non-serviceable electronic device. When it fails, it must be replaced using the following procedure:

- Open the coach front service compartment in order to get access to the ECU;
- Remove the electrical cable connectors;
- Unscrew the WTEC/ECU unit;
- Replace by reversing the procedure.

⚠ CAUTION ⚠

Place the battery master switch to the ‘’OFF’’ position.

10.1.2 WTEC/Troubleshooting

For complete information about WTEC /Troubleshooting, refer to ‘’Allison Transmission, MD Series, Troubleshooting Manual, SA2978’’ March 1997, pages D-9 and D-10.

10.1.3 Diagnostic Code Memory

Diagnostic codes are logged in a list in memory (sometimes referred to as the queue), positioning the most recently occurring code first and containing up to five codes. The codes contained in the list have the information recorded as shown in the chart below. Access to the code list position, main code, sub code and active indicator is available through either the shifter display or the Pro-Link Diagnostic Data Reader (DDR). Access to the ignition cycle counter and event counter is obtained through the DDR only.

Code List Position	Main Code	Sub Code	Active Indicator	Ignition Cycle Counter	Event Counter
d1	21	12	YES	00	10
d2	41	12	YES	00	04
d3	23	12	NO	08	02
d4	34	12	NO	13	01
d5	56	11	NO	22	02
Displayed on shifter display and DDR			YES= ACTIVE= "MODE ON"	Ignition cycle counter and event counter are not available on shifter display	

NOTE

All information is available with a diagnostic tool (DDR).

The following paragraphs define the different parts of the code list.

Code List Position

The position (1 through 5) which a code occupies in the code list in memory. Positions are shown as "d1" (Diagnostic Code #1) through "d5."

Main Code

The general condition or area of fault detected by ECU.

Sub Code

The specific area or condition under the main code in which the condition was detected.

Active Indicator

Will be turned "On" when a fault condition is active (shifter will display "MODE ON" or the DDR will display "YES"). Will be set to "Off" when conditions exist to indicate fault condition is gone.

Ignition Cycle Counter

Used to clear diagnostic codes that are inactive from the code list in memory. A counter is incremented each time a normal ECU power down occurs following clearing of the Active Indicator. A code will be cleared from the list when the counter exceeds 25.

Event Counter

Used to count the number of occurrences of a diagnostic code that occurs prior to the incident being cleared from the code list. The most recent code will be in position "d1". If the most recent

code is one which is already in the code list, that code will be moved to position "d1", the Active Indicator will be turned "On" (shifter will display "MODE ON" or the DDR will display "YES"), the Ignition Cycle Counter is cleared and "1" is added to the Event Counter.

Clearing the Active Indicator and code Records from the Code List in Memory

If the conditions causing a diagnostic code to be set are cleared, the Active Indicator can be manually cleared by holding the "MODE" button down continuously for 3 seconds until a tone is heard from the shifter.

To clear code records from the list, hold the "MODE" button down continuously for ten seconds until a second tone sounds. All diagnostic records in the list that are not active will then be cleared and the remaining records will be moved up the list.

Code Reading and Code Clearing Procedures

Diagnostic codes can be read and cleared by two methods: by using the Pro-Link 9000 DDR plugged in the receptacle located on L.H. lateral console (Shells)/L.H. side control panel (Coaches) or by using the shifter display. The use of the Pro-Link 9000 DDR is described in the instruction manual supplied with each tool. The method for reading and clearing codes described in this section refers only to entering of the Diagnostic Display Mode by the proper button selection.

The Diagnostic Display Mode may be entered for viewing of codes at any speed. Codes can only be cleared when the output speed = 0 and no output speed sensor failure is active.
The following descriptions explain how to use the shifter to read and clear codes.

10.1.4 Reading Codes

1. Enter the diagnostic display mode by pressing the "▲" and "▼" (upshift and downshift arrows) buttons at the same time on the pushbutton shifter.

NOTE
If a "DO NOT SHIFT" condition is present at this time, the lever should be in the same position as it was at the time of code detection. If not, this shifter tone will sound continuously.
NOTE

If an Oil Level Sensor (OLS) is present, the oil level will be displayed first. Diagnostic code display is achieved by depressing the UPSHIFT and DOWNSHIFT arrows or display MODE button a second time.

2. Read the first code in the first of five code positions on the digital display of the shifter. For example, we will read code 25 11 in the first position. The display will change every two seconds as follows:
   a. Code list position --"d1";
   b. Main code --"25";
   c. Sub code --"11"; and
   d. Display will repeat cycle of a., b. and c, above.
3. Press the "MODE" button momentarily to view the second position (d2) in the same way as 2. above.
4. To view the third, fourth and fifth positions (d3, d4 and d5), momentarily press the "MODE" button as explained above.
5. Pressing the "MODE" button momentarily after the fifth position is displayed will cause the sequence of code positions to start over with the first position.
6. Any code that is active will be indicated by the "MODE ON" indicator (Active Indicator) being turned on while in that code position (while in the normal operation).
7. Any code position in the list which does not have a diagnostic code logged will display "- -" for both the main and sub code displays. All positions after a code codes.

10.1.5 Clearing Codes

1. Clearing of the active indicator is automatically done at ECU power down on all but code 69 34.
2. Some codes will clear the active indicator automatically when the condition causing the code is no longer detected by the ECU (see Diagnostic Code List and Description, page 7 - 22).
3. Manual clearing is possible while in the diagnostic display mode and after the condition causing the code is corrected (output speed must be zero).

a. To clear all active indicators, hold the "MODE" button down continuously for 3 seconds until the shifter tone sounds for 0.5 seconds.

b. Release the "MODE" button to return to normal operating mode. If the condition causing the code was not active at the time, the active indicator will turn off.

⚠ CAUTION ⚠

If clearing a code while locked in a Forward or Reverse position (fail-to-range), the transmission will still be in Drive or Reverse when the clearing procedure is completed. Neutral must be selected manually.

Exiting the Diagnostic Display Mode

The diagnostic display mode can be exited by any of the following procedures:

1. Press the "▲" and "▼" (upshift and downshift) buttons at the same time on the pushbutton shifter.
2. Press any range button, "D", "N" or "R", on the pushbutton shifter (the shift will be commanded if it is not inhibited by an active code).
3. Do nothing and wait until the calibrated time (approximately 10 minutes) has passed and the system automatically returns to the normal operating mode.
4. Turn off power to the ECU (turn off the vehicle at the ignition switch).
5. After the clearing of a code, the active indicator procedure described above has been performed.

Clearing Records from the Code List in Memory

If the requirements for Manual Clearing the Active Indicator have been satisfied, and the "MODE" button is held down continuously for ten seconds while in the display mode until a tone sounds, then all diagnostic records in the code list that are not active will be cleared and the remaining records will be moved up in the code list.

Abbreviations found in the Code Chart

The following responses are used throughout the following chart to command safe operation when diagnostic codes are set.

1. **DNS** (**D**o **N**ot **S**hift) Response
   a. Turn off lockup clutch and inhibit lockup operation.
   b. Inhibit all shifts.
   c. Turn on the *DO NOT SHIFT* light.
   d. Pulse the tone generator for 8 seconds when the condition is first detected.
   e. Blank the select digit in the display.
   f. Ignore any range selection inputs and disable the button feedback tone for the pushbutton shifter.
2. **SOL OFF** (**Sol**enoid **Off**) Response

   All solenoids are commanded off (turning solenoids "A" and "B" off electrically causes them to be on hydraulically).
3. **RPR** (**R**eturn to **P**revious **R**ange) Response

   When the ratio or C3 pressure switch tests associated with a shift are not passed, the ECU commands the same range as commanded at the beginning of the shift.
4. **NNC** (**N**eutral **N**o **C**lutches) Response

   When certain ratio or C3 pressure switch tests are not passed, the ECU commands a neutral condition with no clutches applied.

Diagnostic code list and description

MAIN CODE	SUB CODE	DESCRIPTION	DO NOT SHIFT LIGHT	INHIBITED OPERATION DESCRIPTION
12	12	Oil level, low	No	No upshift above a calibration range
12	23	Oil level, high	No	No upshift above a calibration range
13	12	ECU input voltage, low	Yes	DNS, SOL OFF (Hydraulic default)
13	13	ECU input voltage, medium low	No	None: Shift adaptive feature will not function.
13	23	ECU input voltage, high	Yes	DNS, SOL OFF (Hydraulic default)
14	12	Oil level sensor, low	No	None
14	23	Oil level sensor, high	No	None
21	12	Throttle position sensor, low	No	Use Throttle default value
21	23	Throttle position sensor, high	No	Use Throttle default value
22	14	Engine speed sensor reasonableness test	No	Use default engine speed
22	15	Turbine speed sensor reasonableness test	Yes	DNS, Lock in current range
22	16	Output speed sensor reasonableness or rapid decel test	Yes	DNS, Lock in current range
23	12	Primary Shifter or RSI Link Fault	No	Hold in last valid direction
23	13	Primary Shifter Mode Function Fault	No	Mode change not permitted
23	14	Secondary Shifter or RSI Link Fault	No	Hold in last valid direction
23	15	Secondary Shifter Mode Function Fault	No	Mode change not permitted
24	12	Sump oil temperature, cold	Yes	DNS
24	23	Sump oil temperature, hot	No	No upshifts above a calibration range
25	00	Output speed reasonableness test, detected at 0 speed, (L)	Yes	DNS, Lock in current range (L)
25	11	Output speed reasonableness test, detected at 0 speed, (1st)	Yes	DNS, Lock in current range (1st)
25	22	Output speed reasonableness test, detected at 0 speed 2nd	Yes	DNS, Lock in current range (2nd)
25	33	Output speed reasonableness test, detected at 0 speed, 3rd	Yes	DNS, Lock in current range (3rd)

MAIN CODE	SUB CODE	DESCRIPTION	DO NOT SHIFT LIGHT	INHIBITED OPERATION DESCRIPTION
25	44	Output speed reasonableness test, detected at 0 speed, 4th	Yes	DNS, Lock in current range (4th)
25	55	Output speed reasonableness test, detected at 0 speed, 5th	Yes	DNS, Lock in current range (5th)
25	66	Output speed reasonableness test, detected at 0 speed, 6th	Yes	DNS, Lock in current range (6th)
25	77	Output speed reasonableness test, detected at 0 speed, R	Yes	DNS, Lock in current range (R)
32	00	C3 pressure switch open, L range	Yes	DNS, Lock in current range (L)
32	33	C3 pressure switch open, 3rd range	Yes	DNS, Lock in current range (3rd)
32	55	C3 pressure switch open, 5th range	Yes	DNS, Lock in current range (5th)
32	77	C3 pressure switch open, R range	Yes	DNS, Lock in current range (R)
33	12	Sump oil temperature sensor, low	No	Use default value of 200ø F (93ø C)
33	23	Sump oil temperature sensor, high	No	Use default value of 200ø F (93ø C)
34	12	EEPROM, factory cal. compatibility number wrong	Yes	DNS, SOL OFF (Hydraulic default)
34	13	EEPROM, factory calibration block checksum	Yes	DNS, SOL OFF (Hydraulic default)
34	14	EEPROM, Power Off Block checksum	Yes	Use previous location, or factory calibration and reset adaptive
34	15	EEPROM, Diagnostic Queue Block Checksum	Yes	Use previous location, or clear diagnostic queue
34	16	EEPROM, Real Time Block Checksum	Yes	DNS, SOL OFF (Hydraulic default)
35	00	Power interruption (Code set after power restored)	No	NONE (Hydraulic default during interruption)
35	16	Real Time EEPROM Write Interruption	Yes	DNS, SOL OFF (Hydraulic default)
36	00	Hardware/Software not compatible	Yes	DNS, SOL OFF (Hydraulic default)
41	12	Open or short to ground, A solenoid circuit	Yes	DNS, SOL OFF (Hydraulic default)

MAIN CODE	SUB CODE	DESCRIPTION	DO NOT SHIFT LIGHT	INHIBITED OPERATION DESCRIPTION
41	13	Open or short to ground, B solenoid circuit	Yes	DNS, SOL OFF (Hydraulic default)
41	14	Open or short to ground, C solenoid circuit	Yes	DNS. SOL OFF (Hydraulic default)
41	15	Open or short to ground, D solenoid circuit	Yes	DNS, SOL OFF (Hydraulic default)
41	16	Open or short to ground, E solenoid circuit	Yes	DNS, SOL OFF (Hydraulic default)
41	21	Open or short to ground, F solenoid circuit	No	Lock-up inhibited
41	22	Open or short to ground, G solenoid circuit	Yes	DNS, SOL OFF (Hydraulic default)
41	23	Open or short to ground, H solenoid circuit	No	Retarder allowed, differential lock inhibited
41	24	Open or short to ground, J solenoid circuit	No	Low and 1st inhibited
41	25	Open or short to ground, K solenoid circuit	No	K solenoid operation inhibited
41	26	Open or short to ground, N solenoid circuit	No	Low and 1st inhibited
42	12	Short to battery, A solenoid circuit	Yes	DNS, Lock in a range
42	13	Short to battery, B solenoid circuit	Yes	DNS, Lock in a range
42	14	Short to battery, C solenoid circuit	Yes	DNS, Lock in a range
42	15	Short to battery, D solenoid circuit	Yes	DNS, Lock in a range
42	16	Short to battery, E solenoid circuit	Yes	DNS, Lock in a range
42	21	Short to battery, F solenoid circuit	No	Lock-up inhibited
42	22	Short to battery, G solenoid circuit	Yes	DNS, Lock in a range
42	23	Short to battery, H solenoid circuit	No	Retarder allowed, differential lock inhibited
42	24	Short to battery, J solenoid circuit	No	Low and 1st inhibited

MAIN CODE	SUB CODE	DESCRIPTION	DO NOT SHIFT LIGHT	INHIBITED OPERATION DESCRIPTION
42	25	Short to battery, K solenoid circuit	No	K solenoid operation inhibited
42	26	Short to battery, N solenoid circuit	No	Low and 1st inhibited
43	21	Low side driver, F solenoid circuit	No	Lock-up inhibited
43	25	Low side driver, K solenoid circuit	No	K solenoid operation inhibited
43	26	Low side driver, N solenoid circuit	No	Low and 1st inhibited
44	12	Short to ground, A solenoid circuit	Yes	DNS, SOL OFF (Hydraulic default)
44	13	Short to ground, B solenoid circuit	Yes	DNS, SOL OFF (Hydraulic default)
44	14	Short to ground, C solenoid circuit	Yes	DNS, SOL OFF (Hydraulic default)
44	15	Short to ground, D solenoid circuit	Yes	DNS, SOL OFF (Hydraulic default)
44	16	Short to ground, E solenoid circuit	Yes	DNS, SOL OFF (Hydraulic default)
44	21	Short to ground, F solenoid circuit	No	Lock-up inhibited
44	22	Short to ground, G solenoid circuit	Yes	DNS, SOL OFF (Hydraulic default)
44	23	Short to ground, H solenoid circuit	No	Retarder allowed. differential lock inhibited
44	24	Short to ground, J solenoid circuit	No	Low and 1st inhibited
44	25	Short to ground, K solenoid circuit	No	K solenoid operation inhibited
44	26	Short to ground, N solenoid circuit	No	Low and 1st inhibited
45	12	Open circuit, A solenoid circuit	Yes	DNS, SOL OFF (Hydraulic default)
45	13	Open circuit, B solenoid circuit	Yes	DNS, SOL OFF (Hydraulic default)
45	14	Open circuit, C solenoid circuit	Yes	DNS, SOL OFF (Hydraulic default)

MAIN CODE	SUB CODE	DESCRIPTION	DO NOT SHIFT LIGHT	INHIBITED OPERATION DESCRIPTION
45	15	Open circuit, D solenoid circuit	Yes	DNS, SOL OFF (Hydraulic default)
45	16	Open circuit, E solenoid circuit	Yes	DNS, SOL OFF (Hydraulic default)
45	21	Open circuit, F solenoid circuit	No	Lock-up inhibited
45	22	Open circuit, G solenoid circuit	Yes	DNS, SOL OFF (Hydraulic default)
45	23	Open circuit, H solenoid circuit	No	Retarder allowed differential lock inhibited
45	24	Open circuit, J solenoid circuit	No	Low and 1st inhibited
45	25	Open circuit, K solenoid circuit	No	K solenoid operation inhibited
45	26	Open circuit, N solenoid circuit	No	Low and 1st inhibited
51	10	Offgoing ratio test (during shift), 1 to L	Yes	Low and 1st inhibited
51	12	Offgoing ratio test (during shift), 1 to 2	Yes	DNS, RPR
51	21	Offgoing ratio test (during shift), 2 to 1	Yes	DNS, RPR
51	23	Offgoing ratio test (during shift), 2 to 3	Yes	DNS, RPR
51	43	Offgoing ratio test (during shift), 4 to 3	Yes	DNS, RPR
51	45	Offgoing ratio test (during shift), 4 to 5	Yes	DNS, RPR
51	65	Offgoing ratio test (during shift), 6 to 5	Yes	DNS, RPR
52	01	Offgoing C3PS test (during shift), L to 1	Yes	DNS, RPR
52	08	Offgoing C3PS test (during shift), L to N1	Yes	DNS, NNC
52	32	Offgoing C3PS test (during shift), 3 to 2	Yes	DNS, RPR

MAIN CODE	SUB CODE	DESCRIPTION	DO NOT SHIFT LIGHT	INHIBITED OPERATION DESCRIPTION
52	34	Offgoing C3PS test (during shift), 3 to 4	Yes	DNS, RPR
52	54	Offgoing C3PS test (during shift), 5 to 4	Yes	DNS, RPR
52	56	Offgoing C3PS test (during shift), 5 to 6	Yes	DNS, RPR
52	71	Offgoing C3PS test (during shift), R to 1	Yes	DNS, NNC
52	72	Offgoing C3PS test (during shift), R to 2	Yes	DNS, NNC
52	78	Offgoing C3PS test (during shift), R to N1	Yes	DNS, NNC
52	79	Offgoing C3PS test (during shift), R to 2 (R to NNC to 2)	Yes	DNS, NNC
52	99	Offgoing C3PS test (during shift), N3 to N2	Yes	DNS, RPR
53	08	Offgoing speed test (during shift), L to N1	Yes	DNS, NNC
53	18	Offgoing speed test (during shift), 1 to N1	Yes	DNS, NNC
53	28	Offgoing speed test (during shift), 2 to N1	Yes	DNS, NNC
53	29	Offgoing speed test (during shift), 2 to N2	Yes	DNS, RPR
53	38	Offgoing speed test (during shift), 3 to N1	Yes	DNS, NNC
53	39	Offgoing speed test (during shift), 3 to N3	Yes	DNS, RPR
53	48	Offgoing speed test (during shift), 4 to N1	Yes	DNS, NNC
53	49	Offgoing speed test (during shift), 4 to N3	Yes	DNS, RPR
53	58	Offgoing speed test (during shift), 5 to N1	Yes	DNS, NNC
53	59	Offgoing speed test (during shift), 5 to N3	Yes	DNS, RPR

MAIN CODE	SUB CODE	DESCRIPTION	DO NOT SHIFT LIGHT	INHIBITED OPERATION DESCRIPTION
53	68	Offgoing speed test (during shift), 6 to N1	Yes	DNS, NNC
53	69	Offgoing speed test (during shift), 6 to N4	Yes	DNS, RPR
53	78	Offgoing speed test (during shift), R to N1	Yes	DNS, NNC
53	99	Offgoing speed test (during shift), N2 to N3 or N3 to N2	Yes	DNS, RPR
54	01	Oncoming ratio test (after shift), L to 1	Yes	DNS, RPR
54	07	Oncoming ratio test (after shift), L to R	Yes	DNS, NNC
54	10	Oncoming ratio test (after shift), 1 to L	Yes	DNS, RPR
54	12	Oncoming ratio test (after shift), 1 to 2	Yes	DNS, RPR
54	17	Oncoming ratio test (after shift), 1 to R	Yes	DNS, NNC
54	21	Oncoming ratio test (after shift), 2 to 1	Yes	DNS, RPR
54	23	Oncoming ratio test (after shift), 2 to 3	Yes	DNS, RPR
54	27	Oncoming ratio test (after shift), 2 to R	Yes	DNS, NNC
54	32	Oncoming ratio test (after shift), 3 to 2	Yes	DNS, RPR
54	34	Oncoming ratio test (after shift), 3 to 4	Yes	DNS, RPR
54	43	Oncoming ratio test (after shift), 4 to 3	Yes	DNS, RPR
54	45	Oncoming ratio test (after shift), 4 to 5	Yes	DNS, RPR or SOL OFF (Hydraulic default)
54	54	Oncoming ratio test (after shift), 5 to 4	Yes	DNS,RPR
54	56	Oncoming ratio test (after shift), 5 to 6	Yes	DNS,RPR

MAIN CODE	SUB CODE	DESCRIPTION	DO NOT SHIFT LIGHT	INHIBITED OPERATION DESCRIPTION
54	65	Oncoming ratio test (after shift), 6 to 5	Yes	DNS,RPR
54	70	Oncoming ratio test (after shift), R to L	Yes	DNS,NNC
54	71	Oncoming ratio test (after shift), R to 1	Yes	DNS,NNC
54	72	Oncoming ratio test (after shift), R to 2	Yes	DNS,NNC
54	80	Oncoming ratio test (after shift), N1 to L	Yes	DNS,RPR
54	81	Oncoming ratio test (after shift), N1 to 1	Yes	DNS,RPR
54	82	Oncoming ratio test (after shift), N1 to 2	Yes	DNS,RPR
54	83	Oncoming ratio test (after shift), N1 to 3	Yes	DNS,RPR
54	85	Oncoming ratio test (after shift), N1 to 5	Yes	DNS,RPR
54	86	Oncoming ratio test (after shift), Nl to 6	Yes	DNS, RPR
54	92	Oncoming ratio test (after shift), R to 2 (R to NNC to 2)	Yes	DNS, NNC
54	92	Oncoming ratio test (after shift), N1 to 2 (N1 to NNC to 2)	Yes	DNS, RPR
54	92	Oncoming ratio test (after shift), N2 to 2	Yes	DNS, RPR
54	93	Oncoming ratio test (after shift), N3 to 3	Yes	DNS, RPR
54	95	Oncoming ratio test (after shift), N3 to 5	Yes	DNS, RPR
54	96	Oncoming ratio test (after shift), N4 to 6	Yes	DNS, RPR
54	97	Oncoming ratio test (after shift), 2 to R (2 to NNC to R)	Yes	DNS, NNC
55	17	Oncoming C3PS test (after shift), 1 to R	Yes	DNS, NNC

MAIN CODE	SUB CODE	DESCRIPTION	DO NOT SHIFT LIGHT	INHIBITED OPERATION DESCRIPTION
55	27	Oncoming C3PS test (after shift), 2 to R	Yes	DNS, NNC
55	80	Oncoming C3PS test (after shift), N1 to L	Yes	DNS, RPR
55	87	Oncoming C3PS test (after shift), N1 to R	Yes	DNS, RPR
55	97	Oncoming C3PS test (after shift), 2 to R or NVL to R (2 to NNC to R)	Yes	DNS, NNC
56	00	Range verification test, L	Yes	DNS, 1st, Low, or SOL OFF (Low)
56	11	Range verification test, 1st	Yes	DNS, 6th
56	22	Range verification test, 2nd	Yes	DNS, 6th or 5th
56	33	Range verification test, 3rd	Yes	DNS, 5th or SOL
56	44	Range verification test, 4th	Yes	DNS, 3rd or 5th
56	55	Range verification test, 5th	Yes	DNS, SOL OFF (5th) or 3rd
56	66	Range verification test, 6th	Yes	DNS, 5th, 3rd, or SOL OFF (3rd)
56	77	Range verification test, R	Yes	DNS, N2 or N3
57	11	Range verification C3PS test, 1st	Yes	DNS, SOL OFF (3rd)
57	22	Range verification C3PS test, 2nd	Yes	DNS, 3rd
57	44	Range verification C3PS test, 4th	Yes	DNS, 5th or SOL OFF (3rd)
57	66	Range verification C3PS test, 6th	Yes	SOL OFF (5th), DNS
57	88	Range verification C3PS test, N1	Yes	DNS, N3
57	99	Range verification C3PS test, N2 or N4	Yes	DNS, N3
61	00	Retarder oil temperature, hot	No	None
62	12	Retarder oil temperature sensor, low	No	None
62	23	Retarder oil temperature sensor, high	No	None
63	00	Special function input	No	Depends on special function
64	12	Retarder modulation request sensor, low	No	Retarder operation inhibited
64	23	Retarder modulation request sensor, high	No	Retarder operation inhibited

MAIN CODE	SUB CODE	DESCRIPTION	DO NOT SHIFT LIGHT	INHIBITED OPERATION DESCRIPTION
65	00	Engine rating too high	Yes	DNS
66	00	Serial communications interface fault	No	Use default throttle values
69	12	ECU, A solenoid driver open	Yes	DNS, SOL OFF (hydraulic default)
69	13	ECU, B solenoid driver open	Yes	DNS, SOL OFF (hydraulic default)
69	14	ECU, C solenoid driver open	Yes	DNS, SOL OFF (hydraulic default)
69	15	ECU, D solenoid driver open	Yes	DNS, SOL OFF (hydraulic default)
69	16	ECU, E solenoid driver open	Yes	DNS, SOL OFF (hydraulic default)
69	21	ECU, F solenoid driver open	No	Lock-up inhibited
69	22	ECU, G solenoid driver open	Yes	DNS, SOL OFF (Hydraulic default)
69	23	ECU, H solenoid driver open	No	Retarder allowed, differential lock inhibited
69	24	ECU, J solenoid driver open	No	Low and 1 st inhibited
69	25	ECU, K solenoid driver open	No	K solenoid operation inhibited
69	26	ECU, N solenoid driver open	No	Low and 1st inhibited
69	32	ECU, SPI communications link fault	No	Hold in last valid direction
69	33	ECU, Central Operating Processor (COP) time-out	Yes	Reset ECU, Shutdown ECU on 2nd occurrence (power loss: hydraulic defaults)
69	34	ECU, EEPROM write time-out	Yes	DNS, SOL OFF (Hydraulic default)
69	35	ECU, EEPROM checksum	Yes	Induce COP time-out (reset ECU)
69	36	ECU, RAM self test	Yes	Induce COP time-out (reset ECU)
69	41	ECU, I/O ASIC addressing test	Yes	Induce COP time-out (reset ECU)
0	35	Software, minor loop overrun	Yes	Induce COP time-out (reset ECU)

MAIN CODE	SUB CODE	DESCRIPTION	DO NOT SHIFT LIGHT	INHIBITED OPERATION DESCRIPTION
70	35	Software, illegal write to access $0000	Yes	Induce COP time-out (reset ECU)
70	35	Software, major loop overrun	Yes	Induce COP time-out (reset ECU)

11. ZF-ASTRONIC TRANSMISSION SYSTEM FAULTS AND ERROR MESSAGES

11.1 SYSTEM FAULTS (ERROR MESSAGES)

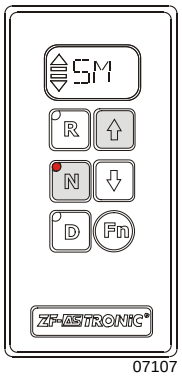

If the "**SM**" symbol appears in the display, a system error has occurred.

- **Stop the vehicle**
- **Vehicle may no longer be driven**

Error messages and the reactions resulting from these errors can be deleted with the vehicle at a standstill and the "Ignition OFF". (Wait until the display goes out). If the display does not go out once the ignition has been turned "OFF", set the battery master switch to the **OFF** position. Switch the ignition back on. If the error message is still in place, the transmission has to be repaired. The transmission is inoperative. The vehicle will have to be taken to a service point. The error number(s) must be specified when the service point is contacted.

Calling up error numbers

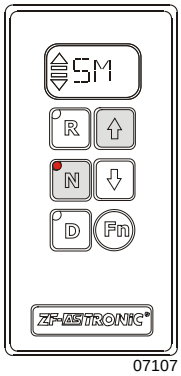

- Switch on ignition
- Depress "**N**" key
- Hold down " ⇧ " key

* One or more error numbers appear on the display. These correspond to the errors presently active in the system.

Calling up error numbers from the error memory:

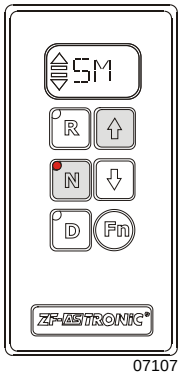

- Switch on ignition
- Press "**N**" key and at the same time depress the foot-operated brake
- Hold down the foot-operated brake and depress and hold down " ⇧ " key

* The errors stored in the transmission ECU are shown on the display one after another.

ERROR CODES

Remark to titles in table:

ZF fault number: defined by ZF.
Display SM-Symbol : (0=NO, 1=YES) Display shows "**SM**"(severe failure)
Warning lamp : (0=NO, 1=YES) Telltale panel warning lamp "**check trans**"(less severe failure)

Shift schemes of transmissions:

10/12-Gear Scheme

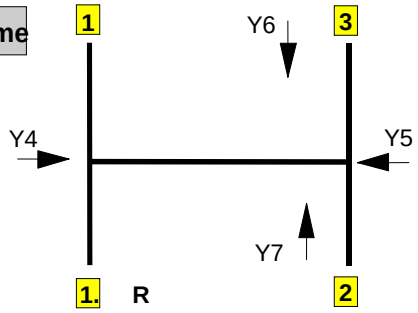

Y2 Splitter K2
Y3 Splitter K1
Y8 Range (GP) low
Y9 Range (GP)

ON MESSAGES CENTER DISPLAY (MCD) SAE-J1587 Codes	ON SHIFT SELECTOR DISPLAY	ISO CODES WITH TESTMAN TOOL	DESCRIPTION
8, 7	8	161	Easy Start, Brake doesn't open completely
8, 14	8	162	Easy Start, Not Available
20,6	14	22	Short circuit to ground at output ACC (wakeup control signal for ZMTEC, keep alive signal for voltage doubler, and power signal for speed sensor #2)
20,5	14	54	Interruption at output ACC (wakeup control signal for ZMTEC, keep alive signal for voltage doubler, and power signal for speed sensor #2)
20,3	14	86	Short circuit to positive at output ACC (wakeup control signal for ZMTEC, keep alive signal for voltage doubler, and power signal for speed sensor #2)
21,2	15	127	Error on ECU temperature sensor signal
21,0	15	193	ECU temperature too high
31,3	1F	137	No range change group (GP) sensor signal (Short circuit to positive)
31,6	1F	138	No range change group (GP) sensor signal (Short circuit to ground)
31,5	1F	139	No range change group (GP) sensor signal (Interruption)
31,13	1F	140	Self adjustment error of range change group sensor in position fast
31,7	1F	159	Range-change group sensor signal leaves engaged position during driving
32,3	20	141	No splitter group (GV) sensor signal (Short circuit to positive)
32,6	20	142	No splitter group (GV) sensor signal (Short circuit to ground)
32,5	20	143	No splitter group (GV) sensor signal (Interruption)
32,13	20	144	Splitter group (GV) sensor self adjustment error
32,7	20	160	Splitter sensor signal leaves engaged position during driving
33,14	21	107	Stabilised voltage supply at output AU (clutch sensor supply) too high or too low
33,13	21	117	Error in clutch self-adjustment process
33,2	21	124	Error on clutch travel signal
34,7	22	120	Mechanical failure of small clutch disengagement valve
34,7	22	121	Mechanical failure of large clutch disengagement valve
34,7	22	122	Mechanical failure of small clutch engagement valve
34,7	22	123	Mechanical failure of large clutch engagement valve
34,6	22	18	Short circuit to ground at output stage to small disengagement clutch valve
34,6	22	19	Short circuit to ground at output stage to small engagement clutch valve
34,6	22	20	Short circuit to ground at output stage to large disengagement clutch valve
34,6	22	21	Short circuit to ground at output stage to large engagement clutch valve
34,5	22	50	Interruption at output stage to small disengagement clutch valve
34,5	22	51	Interruption at output stage to small engagement clutch valve

ON MESSAGES CENTER DISPLAY (MCD) SAE-J1587 Codes	ON SHIFT SELECTOR DISPLAY	ISO CODES WITH TESTMAN TOOL	DESCRIPTION
34,5	22	52	Interruption at output stage to large disengagement clutch valve
34,5	22	53	Interruption at output stage to large engagement clutch valve
34,3	22	82	Short circuit to positive at output stage to small disengagement clutch valve
34,3	22	83	Short circuit to positive at output stage to small engagement clutch valve
34,3	22	84	Short circuit to positive at output stage to large disengagement clutch valve
34,3	22	85	Short circuit to positive at output stage to large engagement clutch valve
35,5	23	41	Interruption at output stage to Y9 (Valve Range)
35,3	23	73	Short circuit to positive at output stage to Y9 (Valve range)
35,6	23	9	Short circuit to ground at output stage to Y9 (Valve Range)
36,5	24	40	Interruption at output stage to Y8 (Valve Range)
36,3	24	72	Short circuit to positive at output stage to Y8 (Valve range)
36,6	24	8	Short circuit to ground at output stage to Y8 (Valve Range)
37,6	25	2	Short circuit to ground at output stage to Y2 (Valve Splitter)
37,5	25	34	Interruption at output stage to Y2 (Valve Splitter)
37,3	25	66	Short circuit to positive at output stage to Y2 (Valve Splitter)
38,6	26	3	Short circuit to ground at output stage to Y3 (Valve Splitter)
38,5	26	35	Interruption at output stage to Y3 (Valve Splitter)
38,3	26	67	Short circuit to positive at output stage to Y3 (Valve Splitter)
39,5	27	36	Interruption at output stage to Y4 (Valve Select)
39,6	27	4	Short circuit to ground at output stage to Y4 (Valve Select)
39,3	27	68	Short circuit to positive at output stage to Y4 (Valve Select)
40,5	28	38	Interruption at output stage to Y6 (Valve Shift)
40,6	28	6	Short circuit to ground at output stage to Y6 (Valve Shift)
40,3	28	70	Short circuit to positive at output stage to Y6 (Valve Shift)
43,2	2B	175	Error on ”Ignition lock” signal (terminal 15)
48,3	30	129	No shift sensor signal (Short circuit to positive)
48,6	30	130	No shift sensor signal (Short circuit to ground)
48,5	30	131	No shift sensor signal (Interruption)
48,13	30	132	Self adjustment error of shift sensor
48,7	30	157	Selector sensor signal leaves position during driving
48,7	30	158	Engage sensor signal leaves engaged position during driving
50,5	32	37	Interruption at output stage to Y5 (Valve Select)

ON MESSAGES CENTER DISPLAY (MCD) SAE-J1587 Codes	ON SHIFT SELECTOR DISPLAY	ISO CODES WITH TESTMAN TOOL	DESCRIPTION
50,6	32	5	Short circuit to ground at output stage to Y5 (Valve Select)
50,3	32	69	Short circuit to positive at output stage to Y5 (Valve Select)
51,5	33	39	Interruption at output stage to Y7 (Valve Shift)
51,6	33	7	Short circuit to ground at output stage to Y7 (Valve Shift)
51,3	33	71	Short circuit to positive at output stage to Y7 (Valve Shift)
54,6	36	17	Short circuit to ground at output stage to Y1 (inertia brake valve)
54,5	36	49	Interruption at output stage to Y1 (inertia brake valve)
54,3	36	81	Short circuit to positive at output stage to Y1 (inertia brake valve)
55,7	37	114	Clutch engaged unintentionally at standstill, gear engaged
55,7	37	118	Clutch does not disengage
55,7	37	119	Clutch does not engage / does not transmit engine torque
56,7	38	145	Range change group (GP) disengagement error
56,7	38	146	Changeover error during range change group (GP) shifting
56,7	38	147	Range change group (GP) does not engage
57,2	39	108	Error in shift lever
57,14	39	110	ZF CAN timeout (can also means shift lever error through ZMP06400.hex)
58,7	3A	154	Main transmission gear does not disengage
58,7	3A	155	Main transmission gear does not engage
58,7	3A	156	Wrong gear shifting
59,7	3B	151	Selector cylinder does not disengage
59,7	3B	152	Change over error during gate selection procedure
59,7	3B	153	Selector cylinder does not engage
60,3	3C	133	No gate select sensor signal (Short circuit to positive)
60,6	3C	134	No gate select sensor signal (Short circuit to ground)
60,5	3C	135	No gate select sensor signal (Interruption)
60,13	3C	136	Gate select sensor self adjustment error
61,7	3D	148	Splitter (GV) does not disengage
61,7	3D	149	Change over error during splitter shifting
61,7	3D	150	Splitter (GV) does not engage
63,14	3F	100	Error on output speed signal 2
106,0	6A	125	Error on pressure reduction valve
106,14	6A	126	Error on pressure sensor signal

ON MESSAGES CENTER DISPLAY (MCD) SAE-J1587 Codes	ON SHIFT SELECTOR DISPLAY	ISO CODES WITH TESTMAN TOOL	DESCRIPTION
150,14	96	59	Acknowledge fault of PTO 1
150,14	96	60	Acknowledge fault of PTO 2
150,7	96	61	Disengagement fault of PTO 1
150,7	96	62	Disengagement fault of PTO 2
150,7	96	63	Engagement fault of PTO1
150,7	96	64	Engagement fault of PTO2
151,14	97	102	Plausibility error between transmission input speed and output speed
152,6	98	10	Short circuit to ground at output stage to Y10 (Main valve)
152,5	98	42	Interruption at output stage to Y10 (Main valve)
152,3	98	74	Short circuit to positive at output stage to Y10 (Main valve)
153,14	99	-	Error on ISO 14320 communications line
154,14	9A	101	Error on both output speed signals
161,14	A1	98	Error on transmission input speed signal
177,2	B1	128	Error on oil temperature sensor signal
191,14	BF	194	Both sources of vehicle speed are faulty
191,14	BF	99	Error on output speed signal 1
230,14	E6	166	Permanent idle signal
230,14	E6	168	No idle signal or error on ”idle signal switch” signal (EEC2)
230,14	E7	103	Error on ”Wheel-based vehicle speed” signal (CCV
231,7	E7	163	Engine does not react on torque intervention
231,14	E7	164	Error on ”Drivers demand engine percent torque” (EEC1)
231,14	E7	165	Error on ”Accelerator pedal position” (EEC2)
231,14	E7	167	Error on ”Percent load at current speed” signal (EEC2)
231,14	E7	171	Error on ”Actual engine percent torque” signal (EEC1)
231,14	E7	172	Permanent engine brake request signal
231,14	E7	173	Error on ”Brake switch” signal (CCVS)
231,14	E7	177	System-CAN Busoff error
231,11	E7	178	CAN error frames
231,11	E7	179	CAN queue overrun
231,14	E7	180	CAN EEC1 timeout
231,14	E7	181	CAN EEC2 timeout
231,14	E7	182	CAN CCVS timeout

ON MESSAGES CENTER DISPLAY (MCD) SAE-J1587 Codes	ON SHIFT SELECTOR DISPLAY	ISO CODES WITH TESTMAN TOOL	DESCRIPTION
231,14	E7	183	CAN ERC1_ER timeout
231,14	E7	197	Error on "Front axle speed" (WSI)
231,14	E7	198	Error on "Relative wheel speeds" (WSI)
231,14	E7	199	CAN WSI timeout
231,14	E7	26	CAN engine configuration timeout
231,14	E7	27	Error on ”engine configuration message” (engine configuration)
231,14	E7	31	Error on ”Actual engine retarder - percent torque” signal (ERC1_ER)
231,14	E7	32	Error on ”Engine retarder configuration message” (Engine retarder configuration)
231,14	E7	33	CAN ”Engine retarder configuration” timeout
231,14	E7	91	CAN EBC1 timeout
231,14	E7	92	Error on ”ABS active” signal (EBC1)
231,14	E7	93	Error on ”ASR engine control active” signal (EBC1)
231,14	E7	94	Error on ”ASR brake control active” signal (EBC1)
231,14	E7	95	Error on ”Cruise control active” signal (CCVS)
231,14	E7	96	Error on ”Cruise control set speed” (CCVS)
231,14	E7	97	Error on ”Engine speed” signal (EEC1)
-	EE	-	Communication error between GS3 and ZMTEC on display line
248,6	F8	25	Short circuit to ground at output SD to display
248,3	F8	89	Short circuit to positive at output SD to display

12. SPECIFICATIONS

ALLISON AUTOMATIC TRANSMISSION WITH OR WITHOUT RETARDER

XL2 Buses
Gross input power (maximum) ..... 500 HP (373 kW)
Gross input torque (maximum) ..... 1525 Lbf-ft- (2068 Nm)
Rated input speed (minimum-maximum) ..... 1600-2300 rpm
XL2 MTH
Gross input power (maximum) ..... 525 HP (392 kW)
Gross input torque (maximum) ..... 1650 Lbf-ft (2237 Nm)
Rated input speed (minimum-maximum) ..... 1600-2300 rpm

Mounting:
Engine ..... SAE #1 flywheel housing, flex disk drive

Torque converter:
Type ..... One stage, three element, polyphase
Stall torque ratio ..... TC 551-1.8
Lockup clutch with torsional damper ..... Integral/standard

Gearing:
Type ..... Patented, constant mesh, helical, planetary

Ratio:
First 3.51:1
Second 1.91:1
Third 1.43:1
Fourth 1.00:1
Fifth 0.74:1
Sixth 0.64:1
Reverse 4.80:1

Ratio coverage:
6 speed 5.48:1

*** Gear ratios do not include torque converter multiplication.**

Oil System:
Oil type ..... TRANSYND, DEXRON III/VI
Capacity (excluding external circuits) ..... Initial fill 47 US qts (45 liters)
Oil change ..... 24 US qts (23 liters)
Oil change (with retarder) ..... 27.6 US qts (26 liters)

Oil Filters:
Make ..... Allison Transmission
Type ..... Disposable cartridge
Supplier number 29503829
Prévost number 57-1687

SECTION 09: PROPELLER SHAFT

CONTENTS

1. PROPELLER SHAFT 09-2

1.1 DESCRIPTION 09-2

2. REMOVAL, DISASSEMBLY, REASSEMBLY AND INSTALLATION 09-2

3. CLEANING, INSPECTION AND LUBRICATION 09-2

3.1 CLEANING AND INSPECTION 09-2

3.2 LUBRICATION 09-4

4. EXPLANATION OF COMMON DAMAGES 09-4

5. TROUBLESHOOTING 09-4

6. SPECIFICATIONS 09-4

ILLUSTRATIONS

FIGURE 1: PROPELLER SHAFT ASSEMBLY 09-2

1. PROPELLER SHAFT

1.1 DESCRIPTION

The propeller shaft transmits power from the transmission to the differential (Fig. 1). Refer to paragraph *"6. SPECIFICATIONS"* at the end of this section for propeller shaft length. The propeller shaft is "Dana 1810" type with tubular shafts. It is provided with two heavy-duty universal joints (Fig. 1).

The propeller shaft has a full round end yoke at one end and a half round end yoke at the other end. The tube yoke is connected to the differential by a full round end yoke with four needle bearings.

The other extremity (slip yoke assembly) is connected to the transmission by a half round end yoke with two needle bearings.

Furthermore, a slip joint on the propeller shaft compensates for variations in distance between the transmission and the differential, or between the output retarder (optional on the automatic transmission) and differential.

The rise and fall of the drive axle bring about these variations as the vehicle passes over uneven surfaces. The slip joint also eases removal of the transmission or the drive axle.

2. REMOVAL, DISASSEMBLY, REASSEMBLY AND INSTALLATION

Refer to *"SPICER UNIVERSAL JOINTS AND DRIVESHAFTS"* annexed to this section, under headings *"Heavy Duty - removal, disassembly, reassembly and installation".*

Where applicable:

- Remove or install propeller shaft safety guard.
- Screw bolts to the specified torque (Fig. 1).

NOTE
Disregard the procedure on "Lock straps" mentioned in the "Spicer Universal Joints and Driveshafts Manual".

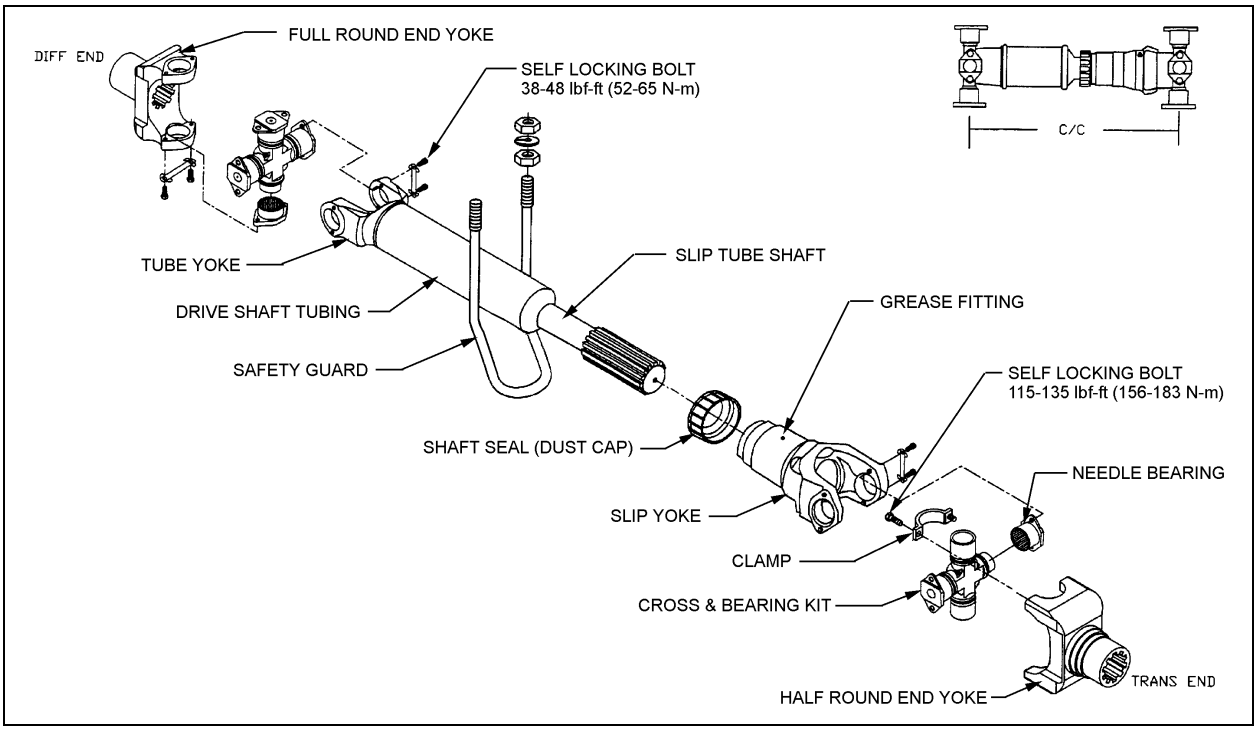

FIGURE 1: PROPELLER SHAFT ASSEMBLY 09002

3. CLEANING, INSPECTION AND LUBRICATION

3.1 CLEANING AND INSPECTION

Thoroughly clean grease from bearings, journal, lubricating grease fittings and other parts. Needle bearing assemblies may be soaked in a cleaning solution to soften hard grease particles. It is extremely important that bearing assemblies be absolutely clean and blown out with compressed air, since small particles of dirt or grit can cause rapid bearing wear. Do not attempt to disassemble needle bearings.

Bearing journal areas should be inspected for roughness or grooving. If light honing does not remove roughness, the entire bearing assembly should be replaced. Excessive wear of the needle bearing is indicated if the needles drop out of the retainer, or if marks are present on the journal bearing surface. In such case, replace bearing assembly. Finally, inspect yokes for cracks, wear or distortion.

NOTE
Repair kits are available for overhaul of the propeller shaft assembly. Refer to the paragraph "6. Specifications" of this section.

3.2 LUBRICATION

Lubricate propeller shaft universal joints and slip yoke periodically, every 6,250 miles (10 000 km) or twice a year, whichever comes first. Apply grease gun pressure to the lube fitting. Use a good quality lithium-base grease such as: NLGI No.2 (suitable for most temperatures) or NLGI No.1 (suitable for extremely low temperatures). Refer to "Spicer Universal Joints and Driveshafts, Service Manual", under heading, "Inspection and Lubrication". See lubrication procedures for U-joints and lubrication for slip splines.

NOTE
Do not assume that bearing cavities have been filled with new grease unless it has expelled around all seals.

4. EXPLANATION OF COMMON DAMAGES

1. Cracks: Stress lines due to metal fatigue. Severe and numerous cracks will weaken the metal until it breaks.

2. Galling: Scraping off of metal or metal displacement due to friction between surfaces. This is commonly found on trunnion ends.

3. Spalling (surface fatigue): Breaking off of chips, scales, or flakes of metal due to fatigue rather than wear. It is usually found on splines and U-joint bearings.

4. Pitting: Small pits or craters in metal surfaces due to corrosion. If excessive, pitting can lead to surface wear and eventual failure.

5. Brinelling: Surface wear failure due to the wearing of grooves in metal. It is often caused by improper installation procedures. Do not confuse the polishing of a surface (false brinelling), where no structural damage occurs, with actual brinelling.

6. Structural Overloading: Failure caused by a load greater than the component can stand. A structural overload may cause propeller shaft tubing to twist under strain or it may cause cracks or breaks in U-joints and spline plugs.

5. TROUBLESHOOTING

Refer to *"Spicer Service Manual - Universal Joints and Driveshafts"* under heading *"Troubleshooting".*

6. SPECIFICATIONS

PROPELLER SHAFT

VEHICLES EQUIPPED WITH ALLISON WORLD TRANSMISSION

XL2-45 COACHES AND W-45 MOTORHOMES

Make ..... Hayes-Dana Inc.
Series 1810
Supplier number 819325-2200
Prevost number 580070

W-40 AND Y-45E MOTORHOMES

Make ..... Hayes-Dana Inc.
Series 1810
Supplier number 819299-1
Prevost number 580075

XL2-45 COACHES EQUIPPED WITH ZF TRANSMISSION

Make ..... Hayes-Dana Inc.
Series 1810
Supplier number 816688-1600
Prevost number 580080

Repair kits

Make ..... Hayes-Dana Inc.
U-joint kit (tube yoke), Supplier number 5-281X
U-joint kit (tube yoke), Prevost number 580043
U-joint kit (slip yoke), Supplier number 5-510X
U-joint kit (slip yoke), Prevost number 580062
Cap and bolt kit, bolt torque 115-135 lbf•ft (156-183 N•m), Supplier number 6.5-70-18X
Cap and bolt kit, bolt torque 115-135 lbf•ft (156-183 N•m), Prevost number 580063
Bolts kit, bolt torque 38-48 lbf•ft (52-65 N•m), Supplier number 6-73-209
Bolts kit, bolt torque 38-48 lbf•ft (52-65 N•m), Prevost number 580071

Half Round End Yoke

Make ..... Covington Detroit Diesel
Supplier number 29511516

NOTE
U-joint kits will come equipped with the serrated bolt and lock patch and will no longer contain a lock strap.

SECTION 10: FRONT AXLE

CONTENTS

1. FRONT AXLE 10-2

1.1 DESCRIPTION 10-2

2. LUBRICATION 10-2

3. MAINTENANCE 10-2

3.1 TIE ROD END PLAY ADJUSTMENT 10-3

4. REMOVAL AND REPLACEMENT 10-3

4.1 REMOVAL 10-3
4.2 REPLACEMENT 10-4

5. SERVICE INSTRUCTIONS FOR STEER AXLE 10-4

6. FRONT WHEEL ALIGNMENT 10-4

6.1 MINOR FRONT WHEEL ALIGNMENT 10-4
6.2 MAJOR FRONT WHEEL ALIGNMENT 10-4
6.3 INSPECTION BEFORE ALIGNMENT 10-4
6.4 TURNING ANGLE ADJUSTMENT 10-5
6.4.1 R.H. Turn Adjustment 10-5
6.4.2 L.H. Turn Adjustment 10-5
6.5 HYDRAULIC STOP 10-5
6.6 FRONT WHEEL CAMBER 10-6
6.6.1 Camber Check 10-6
6.7 FRONT AXLE CASTER 10-6
6.8 FRONT WHEEL TOE-IN 10-7
6.8.1 Inspection and Adjustment 10-7

7. TROUBLESHOOTING 10-8

8. SPECIFICATIONS 10-9

ILLUSTRATIONS

FIGURE 1: FRONT AXLE ASSEMBLY 10-2
FIGURE 2: FRONT AXLE GREASING POINTS 10-2
FIGURE 3: TIE ROD END PLAY ADJUSTMENT 10-3
FIGURE 4: CAMBER 10-6
FIGURE 5: CASTER 10-6
FIGURE 6: TOE-IN MEASUREMENTS 10-7
FIGURE 7: AIR BELLOWS MOUNTING SUPPORT AND AXLE 10-9

1. FRONT AXLE

1.1 DESCRIPTION

This front axle is of the ''Reverse Elliot'' type manufactured by Dana Spicer Europe. The front axle consists of a girder section axle bed or beam with stub axles. Each stub axle is carried on a taper kingpin, with a plain phosphor bronze bushing at the top and at the bottom. The unitized hub bearings used on the NDS range of axles, are non-serviceable items. Bearings are pre-adjusted, lubricated and have seals fitted as part of the manufacturing process. The bearings are greased for life and there is no need or facility for re-lubrication. Brakes are manufactured by KNORR-BREMSE. Steering ball joints with hardened balls and rubbing pads incorporate compression springs which automatically take up any wear.

The tie rod simplifies toe-in adjustment. The maximum turning angle is set through stop screws installed on the inner side of the knuckle.

Steering stabilizer (damper) and steering drag link which are mounted on the front axle are described in Section 14; *"Steering"* of this manual.

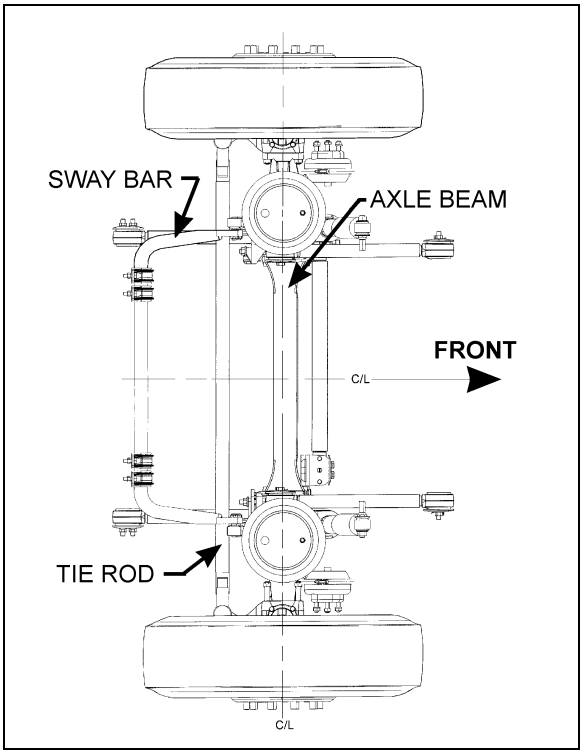

FIGURE 1: FRONT AXLE ASSEMBLY 10026

2. LUBRICATION

Pressure lubricate axle every 6 months or 30,000 miles (48 000 km) whichever comes first (Fig. 2). Tie rod ends and knuckle pins are provided with grease fittings for pressure lubrication. These grease fittings should be serviced every 6,250 miles (10 000 km) or twice a year whichever comes first. Good quality lithium-base roller bearing grease NLGI No.1 and 2 are recommended.

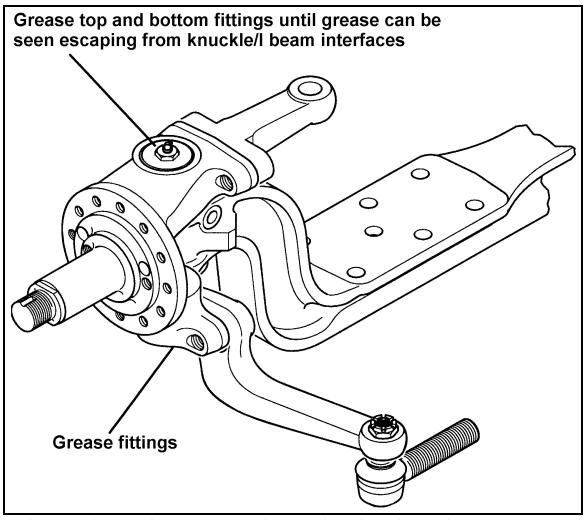

FIGURE 2: FRONT AXLE GREASING POINTS

3. MAINTENANCE

A periodic inspection of the front axle assembly should be made to check that all bolts are tight, and that no damage and distortion have taken place. Suspension support stud nuts, U-bolt nuts, tie rod arms, steering arm nuts and stop screws should be checked and tightened, as required, to the torque specifications given at the end of this section. Also check the condition of the steering knuckle pins and bushings. In case of excessive looseness, the bushings and pins should be replaced.

Any looseness in the steering linkage, under normal steering loads, is sufficient cause to immediately check all pivot points for wear, regardless of accumulated mileage. Steering linkage pivot points should be checked each time the front axle assembly is lubricated. Any looseness can be visually detected while rotating the steering wheel in both directions.

Steering knuckles, knuckle pins and bushings can be overhauled or replaced without removing the axle from the vehicle. However, if extensive

overhaul work is necessary, the axle assembly should be removed.

⚠ CAUTION ⚠

Should removal of a locking device be required when undergoing repairs, disassembly or adjustments, always replace with a new one.

3.1 TIE ROD END PLAY ADJUSTMENT

If end play exceeds 0.047" (1.2 mm), readjustment is necessary.

Remove protective cap, using a suitable tool ie: a 1" x 1/8" x 9" long flat bar, tighten adjuster piece fully home (SOLID) locating thrust cup onto ball pin.

Still with tool located on adjuster piece, back off carefully (LEAST AMOUNT) until adjuster piece cotter pin is allowed to pass through body, then remove tool.

Reinstall protective cap.

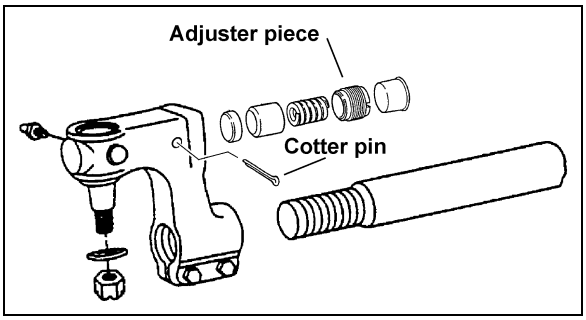

FIGURE 3: TIE ROD END PLAY ADJUSTMENT 10029

4. REMOVAL AND REPLACEMENT

The following procedure deals with the removal of the front axle assembly. The method used to support the axle assembly and suspension components during removal and disassembly depends upon local conditions and available equipment.

4.1 REMOVAL

1. Raise the vehicle by its jacking points on the body (see Section 18, *"Body"* under heading 16; Vehicle Jacking Points) until vehicle body is approximately 30 inches (760 mm) from the floor. Place jack stands under frame. Remove the wheels (if required, refer to Section 13, *"Wheels, Hubs and Tires"*).

⚠ CAUTION ⚠

Use only the recommended jacking points as outlined in section 18 "Body".

2. Exhaust compressed air from the air supply system by opening the drain valve of each reservoir.
3. Install jacks under axle jacking points to support the axle weight.

⚠ WARNING ⚠

To help prevent injury caused by the axle rolling off the jacks, these should be equipped with U-adapters, or similar precautions must be taken

4. Disconnect the steering drag link from the steering arm.
5. Remove the ABS sensors from their location in hubs (if applicable).
6. Disconnect the height control valve link from its support on the axle.
7. Disconnect air lines from front brake chambers, and cover line ends and fittings to prevent the entry of foreign matter.

⚠ CAUTION ⚠

Position the air lines and electric wires so they will not be damaged while removing the front axle assembly.

8. Proceed with steps a, b and c, while referring to Section 16: *"Suspension".*
   a) Disconnect sway bar links from axle brackets.
   b) Remove shock absorbers.
   c) Disconnect five radius rods: one transversal and two longitudinal from subframe, and two upper rods from axle.
9. Remove the bolts and nuts fixing the axle to the left-hand and right-hand side air bellows mounting supports.
10. Using the jacks, slowly lower the axle assembly, and carefully pull away from underneath vehicle.

4.2 REPLACEMENT

Reverse front axle "*Removal*" procedure. Ensure cleanliness of air bellows support mounting plates.

NOTE
Refer to Section 16, ''Suspension", Section 14, "Steering" and to paragraph 8 ''Specifications" at the end of this section for applicable checks and recommended tightening torques.

5. SERVICE INSTRUCTIONS FOR STEER AXLE

Refer to "DANA SPICER Maintenance Manual Model NDS and Maintenance Manual NDS Axles" annexed at the end of this section.

6. FRONT WHEEL ALIGNMENT

Correct front wheel alignment must be maintained for steering comfort and satisfactory tire life. Road shocks and vibrations, as well as normal stress and strains on the front-end system can, under normal operating conditions, result in loss of front wheel alignment.

Check the front wheel alignment when the following occurs:

1. Every 200,000 miles (320 000 km) or 24 months (normal maintenance);
2. When the vehicle does not steer correctly; or
3. To correct a tire wear condition.

There are two types of front wheel alignment: **minor alignment** and **major alignment**.

6.1 MINOR FRONT WHEEL ALIGNMENT

Perform a minor front wheel alignment for all normal maintenance conditions.

Perform the minor front wheel alignment in the following sequence :

1. Inspect all the systems that affect the wheel alignment. See paragraph 6.3, *''Inspection Before Alignment''* in this section.
2. Check the hub bearings. See section 13, *''Wheels, hubs and Tires''* under heading 8: Front and Tag Axle Wheel Hubs.
3. Check and adjust the toe-in.

6.2 MAJOR FRONT WHEEL ALIGNMENT

Perform a major front wheel alignment to correct steering and tire wear conditions.

Perform the major front wheel alignment in the following sequence:

1. Inspect all systems affecting the wheel alignment. See paragraph 6.3, *''Inspection Before Alignment''* in this section.
2. Check the hub bearings. See section 13, *''Wheels, hubs and Tires''* under heading 8: Front and Tag Axle Wheel Hubs.

NOTE
If steering angle stoppers are changed, a special procedure is required for readjusting gearbox steering limiter. See paragraph 6.5 ''Hydraulic Stop" in this section.

3. Check and adjust the turning angle adjustment.
4. Check the camber angle.
5. Check and adjust the caster angle.
6. Check and adjust the toe-in.

6.3 INSPECTION BEFORE ALIGNMENT

Check the following before doing a front wheel alignment:

1. Ensure that the vehicle is at normal riding height. See Section 16, *''Suspension''* under heading 7: *''Suspension Height Adjustment''*.
2. Ensure that front wheels are not the cause of the problem. See Section 13, *''Wheels, Hubs and Tires''*. Inspect the tires for wear patterns indicating suspension damage or misalignment.
    a. Make sure the tires are inflated to the specified pressure.
    b. Make sure the front tires are the same size and type.
    c. Make sure the wheels are balanced.
    d. Check wheel installation and straightness.
3. Check the wheel bearing adjustment.
4. Check steering linkage for bending and pivot points for looseness.

5. Check knuckle pins for evidence of excessive wear.
6. Check radius rods for bending and rubber bushings for evidence of excessive wear.
7. Make sure all fasteners are tightened to the specified torque. Use a torque wrench for verification. As soon as the fastener starts to move, record the torque. Correct if necessary. Replace any worn or damaged fasteners.

6.4 TURNING ANGLE ADJUSTMENT

The maximum turning angle is set through the two steering stop screws installed on the axle center. The turning angle is factory adjusted to accommodate the chassis design, and therefore, does not require adjustment on new vehicles. However, it should be checked and adjusted any time any component of the steering system is repaired, disassembled or adjusted.

Check if front tires rub against the frame or if the steering gear has been serviced.

Proceed with the following method to check the steering maximum turning angle :

6.4.1 R.H. Turn Adjustment

⚠ CAUTION ⚠

To prevent the steering damper from interfering with the adjustment of turning angles, make sure its fixing bracket is at the correct location on the axle center (refer to section 14 "Steering").

1. Turn steering wheel to the right until the boss on the axle center touches the right stop screw.
2. Verify the nearest point of contact of the ball socket body with the air bellows support assembly. Measure the distance between those two points.
3. The distance between these two points should be approximately 1/8 inch (3 mm). If not, the steering stop screws must be readjusted.
4. Verify the nearest point of contact of the drag link with the tire. Measure the distance between those two points.
5. The distance should be 1 inch (25 mm) or more. If not, the steering stop screws must be readjusted.
6. This must be done for a full right turn.
7. If readjustment is required:
   a. Remove the swivel stop screw.
   b. Add to the stop screw the required number of washers to obtain the proper measure, tighten the stop screw afterwards. Two washers of different thickness are available: 1/16 inch and 3/16 inch.

6.4.2 L.H. Turn Adjustment

1. Turn steering wheel to the left until the boss on the axle center touches the left stop screw.
2. Verify the nearest point of contact of the ball socket body with the air bellows support assembly. Measure the distance between those two points.
3. The distance between these two points should be approximately 1/8 inch (3 mm). If not, the steering stop screws must be readjusted.
4. Check the stroke of the steering stabilizer cylinder (damper). It should not exceed 12.59 inches (320 mm).
5. This must be done for a full left turn.
6. If readjustment is required:
   a. Remove the swivel stop screw.
   b. Add to the stop screw the required number of washers to obtain the proper measure, tighten the stop screw afterwards. Two washers of different thickness are available: 1/16 inch and 3/16 inch.

NOTE

If steering angle stoppers are changed, a special procedure is required for readjusting gearbox steering limiter. See paragraph 6.5 "Hydraulic Stop" in this section.

6.5 HYDRAULIC STOP

NOTE

Before steering limiter readjustment, verify vehicle wheel alignment and ensure that oil level is checked and that air bleeding is done.

Refer to *"ZF-Servocom Repair Manual"* annexed at the end of Section 14 *''Steering"* under heading *'Setting and Functional Test.*

6.6 FRONT WHEEL CAMBER

Wheel camber is the number of degrees the top of the wheel tilts outward (positive) or inward (negative) from a vertical angle (Fig. 4).

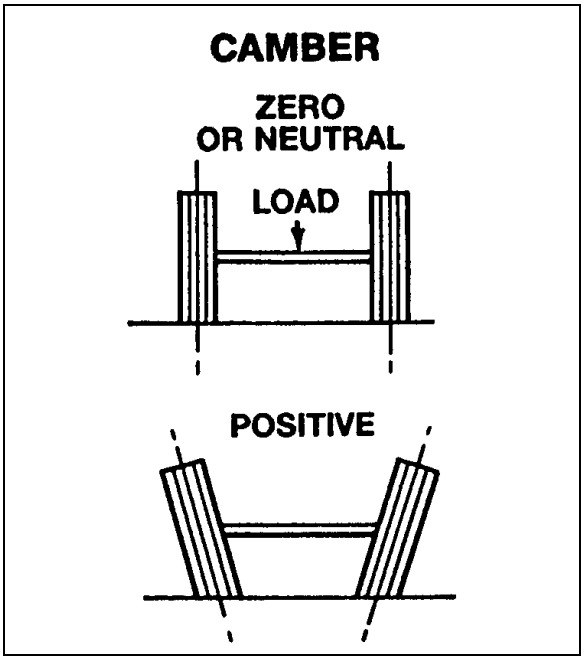

FIGURE 4: CAMBER 10006

The camber angle is not adjustable. Camber variations may be caused by wear at the wheel bearings, steering knuckle pins or by a bent knuckle or sagging axle center. Steering effort is affected by improper camber, and uneven tire wear will result. Excessive positive camber causes an irregular wear of tire at the outer shoulder and excessive negative camber causes wear at the inner shoulder.

6.6.1 Camber Check

For camber specifications, refer to paragraph 8: ''Specifications'' in this section

1. Use an alignment machine to check the camber angle.
2. If camber reading is not in the specifications, check the wheel bearings and repeat the check. If the reading is still not within specifications, verify the steering knuckle pins and axle center. See instructions in "DANA SPICER Maintenance Manual Model NDS and Maintenance Manual NDS Axles" annexed at the end of this section.
3. Check the wheel lateral distortion as instructed in Section 13, *"Wheels, Hubs and Tires"* under heading, *''Checking for Distorted Wheel on Vehicle"*. If distortion is excessive, straighten or replace wheel(s).

6.7 FRONT AXLE CASTER

For caster specifications, refer to paragraph 8: ''Specifications'' in this section.

Positive caster is the rearward tilt from the vertical axis of the knuckle pin. Negative caster is the forward tilt from the vertical axis of the knuckle pin (Fig. 5). This vehicle is designed with a positive caster. The purpose of the caster angle is to give a trailing effect. This results in stabilized steering and a tendency for the wheels to return to the straight-ahead position after taking a turn.

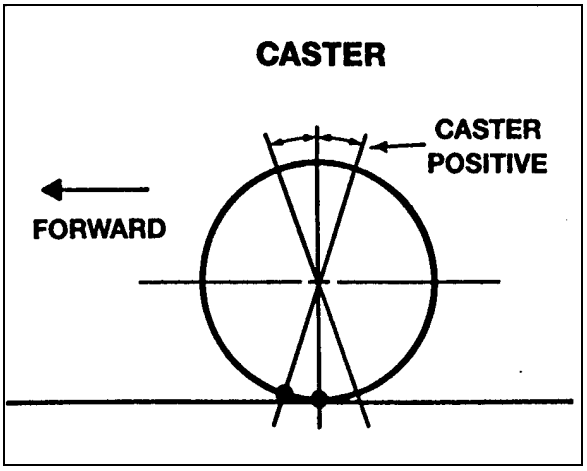

FIGURE 5: CASTER 10007

Excessive caster results in hard steering around corners. A shimmy may also develop when returning to the straight ahead position (pulling out of curves).

Insufficient caster will cause wandering and steering instability. Caster variations may be caused by a bent axle, tilting or distortion of the side suspension supports, damaged radius rod bushings, or unequal tightening of the front and rear suspension support bolts. Incorrect caster must be corrected by replacing the damaged suspension parts. A precision instrument should be used to measure the caster.

NOTE
The caster of this vehicle is factory set and is not adjustable. However, if after replacing damaged parts or in case of improper caster due to irregular setting, the front axle caster needs adjustment; it can be adjusted by means of shims (Prévost #110663) on the left-hand side upper radius rod support in order to obtain minor adjustment.

6.8 FRONT WHEEL TOE-IN

Wheel toe-in is the degree (usually expressed in fractions of an inch) to which the forward part of the vehicle front wheels are closer together than the rear part, measured at wheel centerline height with the wheels in the normal ''straight-ahead'' position of the steering gear.

Incorrect toe-in results in excessive tire wear caused by side slippage and also steering instability with a tendency to wander. Toe-in may be measured from the center of tire tread or from the inside of the tires. Take measurements at both front and rear of axle (see ''A and ''B'' in fig. 6).

When setting toe-in adjustment, the front suspension must be neutralized; that is, all component parts must be in the same relative position when marking the adjustment as they will be when in operation.

To neutralize the suspension, the vehicle must be rolled forward, approximately ten feet.

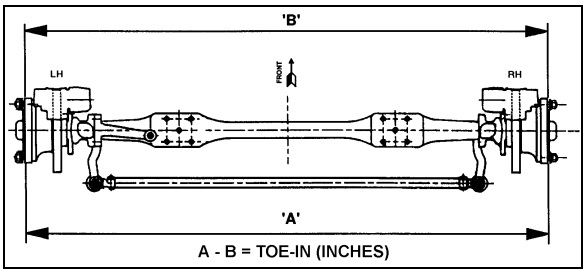

FIGURE 6: TOE-IN MEASUREMENTS

For toe-in specifications, refer to paragraph 8 ''Specifications'' in this section.

By rolling the vehicle forward, all tolerances in the front suspension are taken up and the suspension is then in its normal operating position. Neutralizing the front suspension is extremely important, especially if the vehicle has been jacked up in order to mark the tires. Otherwise, the front wheels will not return to their normal operating position due to the tires gripping the floor surface when the vehicle jack is lowered.

NOTE
"Toe-in" measurements must be taken at the horizontal axis of the wheel centerline.

6.8.1 Inspection and Adjustment

Before checking front wheel toe-in, first check the camber angles and make the necessary corrections.

1. Measure the toe-in.
2. If the toe-in measurement is not within the specified tolerance, carry out the following procedure :
    a. Loosen the pinch bolt nuts and bolts on each tie rod end.
    b. Turn the tie rod until the specified toe-in measurement is obtained.
    c. Tighten the pinch bolt nuts alternately and progressively to 65-75 lbf-ft (88-102 Nm), thus securing all tie rod joints.

7. TROUBLESHOOTING

CONDITION	CAUSE	CORRECTION
Tires wear out quickly or have uneven tire tread wear.	1. Tires have incorrect air pressure. 2. Tires out-of-balance. 3. Incorrect tag axle alignment. 4. Incorrect toe-in setting. 5. Incorrect steering arm geometry.	1. Put specified air pressure in tires. 2. Balance or replace tires. 3. Align tag axle. 4. Adjust toe-in specified setting. 5. Service steering system as necessary.
Vehicle is hard to steer.	1. Low pressure in the power steering system. 2. Steering gear not assembled correctly. 3. Steering linkage needs lubrication. 4. King pins binding. 5. Incorrect steering arm geometry. 6. Caster improperly adjusted. 7. Tie rod ends hard to move. 8. Worn thrust bearing.	1. Repair power steering system. 2. Assemble steering gear correctly. 3. Lubricate steering linkage. 4. Replace king pins. 5. Service steering system as necessary. 6. Adjust caster as necessary. 7. Replace tie rod ends. 8. Replace thrust bearing.
Bent or broken steering arm, steering top lever or tie rod assembly.	1. Too much pressure in the power steering system. 2. Cut-off pressure of the power steering system improperly adjusted. 3. Vehicle not powered on correctly. 4. Power steering system not installed correctly.	1. Replace damaged part(s), adjust power steering system to specified pressure. 2. Make sure vehicle is powered on correctly. 3. Correctly install the power steering system. 4. Correctly install the power steering system.
Worn or broken steering ball stud.	1. Drag link fasteners tightened past specified torque. 2. Lack of lubrication or incorrect lubricant. 3. Power steering stops improperly adjusted.	1. Replace damaged part(s), tighten drag link fasteners to specified torque. 2. Lubricate linkage with specified lubricant. 3. Adjust stops to specified dimension.
Worn king pins and knuckle bushings.	1. Worn or missing seals and gaskets. 2. Incorrect lubricant. 3. Axle not lubricated at scheduled frequency. 4. Incorrect lubrication procedures. 5. Lubrication schedule does not match operating conditions.	1. Replace damaged part(s), replace seals and gaskets. 2. Lubricate axle with specified lubricant. 3. Lubricate axle at scheduled frequency. 4. Use correct lubrication schedule to match operating conditions. 5. Change lubrication schedule to match operating conditions.
Vibration or shimmy of front axle during operation.	1. Caster not adjusted properly. 2. Wheels and/or tires out-of balance. 3. Worn steering stabilizer cylinder.	1. Adjust caster. 2. Balance or replace wheels and/or tires. 3. Replace steering stabilizer cylinder.

8. SPECIFICATIONS

Front Axle

Make ..... DANA SPICER EUROPE

Model ..... NDS

Front Track ..... 84.4 inches (2 145 mm)

Rated load capacity .....16,500 lbs (7 500 kg)

Torque specifications

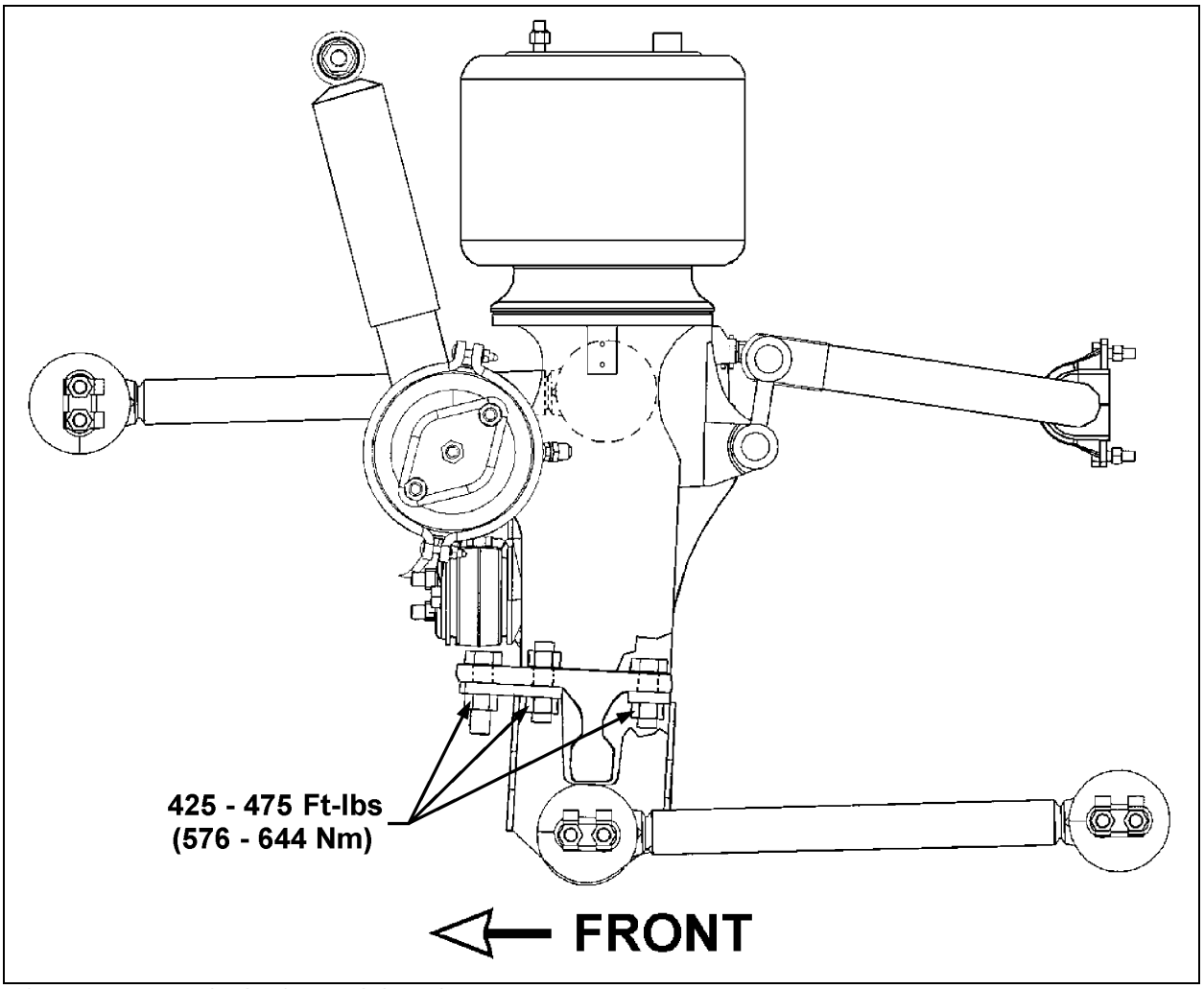

FIGURE 7: AIR BELLOWS MOUNTING SUPPORT AND AXLE 10030

For more torque specifications, see 'Dana Spicer Maintenance Manual NDS Axles and Maintenance Manual Model NDS'' annexed at the end of this section.

FRONT WHEEL ALIGNMENT SPECIFICATIONS			
Front Wheel Alignment	**Minimal**	**Nominal**	**Maximal**
Camber, (degrees) R.H. and L.H. *****	-0.250	0.125	0.375
Caster, (degrees) R.H. and L.H.	2	2.75	3.5
Toe-in (A minus B), (degrees)	0.08	0.13	0.17

NOTE
Camber angle changes with loading. The given numbers are for an empty vehicle.

SECTION 11: REAR AXLES

CONTENTS

1. DRIVE AXLE 11-2

1.1 DESCRIPTION 11-2
1.2 DCDL (DRIVER-CONTROLLED MAIN DIFFERENTIAL LOCK) 11-2
1.3 DRIVE AXLE LUBRICATION 11-2
1.4 MAINTENANCE 11-3
1.4.1 Checking and Adjusting the Oil Level 11-3
1.4.2 Draining and Replacing the Oil 11-3
1.4.3 Speed Sensors (Anti-Lock Brake system, ABS) 11-4
1.5 REMOVAL AND REINSTALLATION 11-4
1.6 DISASSEMBLY AND REASSEMBLY 11-4
1.7 GEAR SET IDENTIFICATION 11-5
1.8 ADJUSTMENTS 11-5
1.9 FASTENER TORQUE CHART 11-5
1.10 TIRE MATCHING 11-5
1.11 DRIVE AXLE ALIGNMENT 11-5
1.11.1 Procedure 11-5
1.12 AXLE SHAFT SEALING METHOD 11-7

2. TAG AXLE 11-8

2.1 GREASE LUBRICATED WHEEL BEARINGS 11-8
2.2 REMOVAL AND REINSTALLATION 11-8
2.3 TAG AXLE ALIGNMENT 11-9

3. SPECIFICATIONS 11-10

ILLUSTRATIONS

FIGURE 1: DRIVE AXLE 11-2
FIGURE 2: DIFFERENTIAL ASSEMBLY 11-2
FIGURE 3: DRIVER-CONTROLLED DIFFERENTIAL LOCK 11-2
FIGURE 4: DIFFERENTIAL HOUSING BOWL 11-3
FIGURE 5: JACKING POINTS ON FRAME 11-4
FIGURE 6: JACKING POINTS ON DRIVE AXLE 11-4
FIGURE 7: FRONT & DRIVE AXLE ALIGNMENT 11-7
FIGURE 8: TAG AXLE ALIGNMENT 11-7
FIGURE 9: AXLE SHAFT INSTALLATION 11-7
FIGURE 10: JACKING POINTS ON TAG AXLE 11-9

1. DRIVE AXLE

1.1 DESCRIPTION

The Meritor drive axle is equipped with a single reduction standard carrier mounted in front of the axle housing. The carrier consists of a hypoid drive pinion, a ring gear set and gears in the differential assembly.

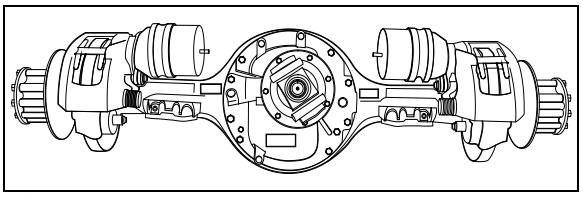

FIGURE 1: DRIVE AXLE 11019

A straight roller bearing (spigot) is mounted on the head of the drive pinion. All other bearings in the carrier are tapered roller bearings. When the carrier operates, there is a normal differential action between the wheels all the time.

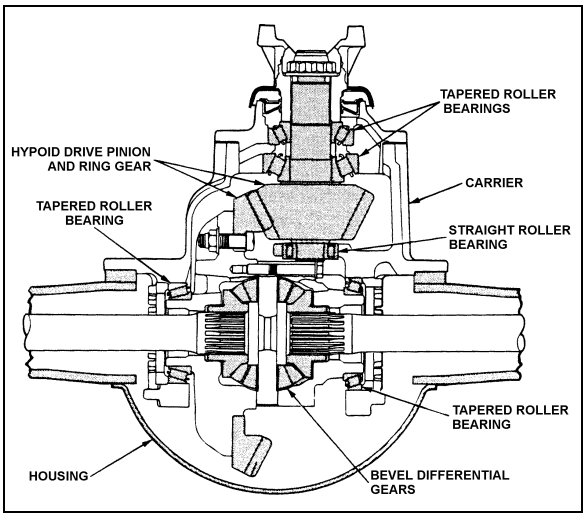

FIGURE 2: DIFFERENTIAL ASSEMBLY 11024

Several speed ratios are available for the drive axle. These ratios depend upon the motor and transmission. Also, special applications may suggest slightly different gear ratios.

1.2 DCDL (DRIVER-CONTROLLED MAIN DIFFERENTIAL LOCK)

Meritor Single-reduction carriers with driver-controlled main differential lock (DCDL) have the same type of gears and bearings as the standard-type carriers. The differential lock is operated by an air actuated shift assembly that is mounted on the carrier.

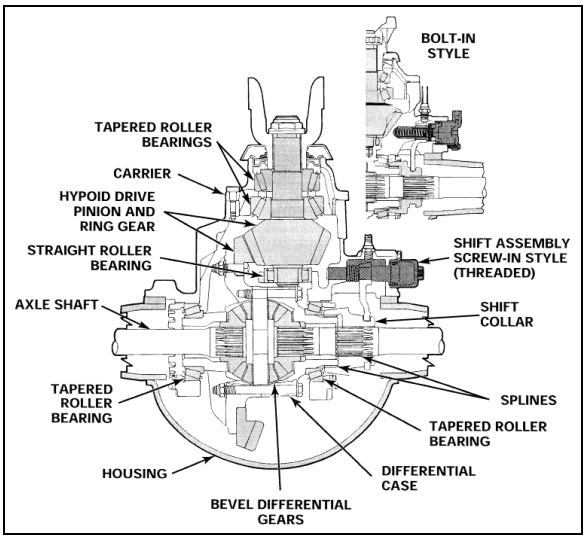

FIGURE 3: DRIVER-CONTROLLED DIFFERENTIAL LOCK

1.3 DRIVE AXLE LUBRICATION

Additional lubrication information is covered in the Meritor Product Information Letter *"Revised Lubricant Change Intervals"* annexed to this section.

Use Multigrade gear oil MIL-L-2105-D. Use the 75W90-gear oil for northern climates and the 80W140 for southern climates. In extreme conditions, or for better performance, fill with synthetic gear oil. Check oil level and add (if necessary) every 25,000 miles (40 000 km) or according to the fleet maintenance interval, whichever comes first (Fig. 4).

Change differential oil and clean the breathers, magnetic fill and drain plugs, every 100,000 miles (160 000 km) or once a year, whichever comes first.

If using full synthetic gear oil, change differential oil and clean the breathers, magnetic fill and drain plugs, every 250,000 miles (400 000 km) or every four years, whichever comes first.

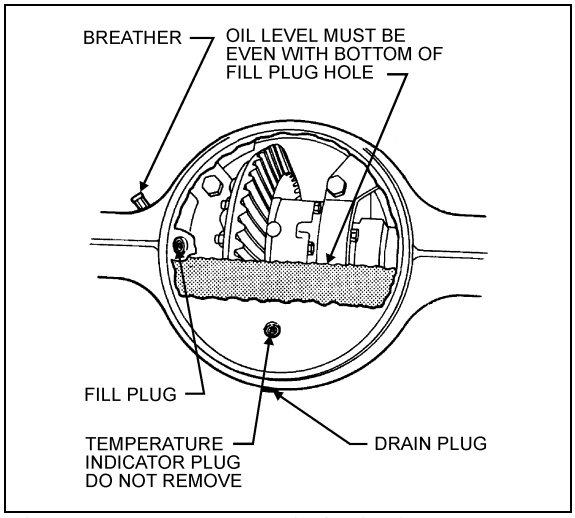

FIGURE 4: DIFFERENTIAL HOUSING BOWL 11007

1.4 MAINTENANCE

Proper vehicle operation begins with preventive maintenance, such as good differential use. The most common types of drive axle carrier failures are spinout, shock, fatigue, overheating and lubrication. Avoid neglecting these points since they would be the first steps to improper maintenance, expensive repairs, and excessive downtime.

Inspect the pinion oil seal, axle shaft flange and carrier housing gaskets for evidence of lubricant leakage. Tighten the bolts and nuts, or replace the gaskets and seals to correct leaks. Maintenance of the axle mountings consists primarily in a regular and systematic inspection of the air suspension units and radius rods, as directed in Section 16, *"Suspension".*

1.4.1 Checking and Adjusting the Oil Level

⚠ WARNING ⚠

Before servicing, park safely over a repair pit, apply parking brake, stop engine and set battery master switch to the "OFF" position.

1. Make sure the vehicle is parked on a level surface.

⚠ WARNING ⚠

Check the oil level when the axle is at room temperature. When hot, the oil temperature may be 190ºF (88ºC) or more and can cause burns. Also, a correct reading is not obtained when the axle is warm or hot.

2. Make sure the axle is "cold" or at room temperature.
3. Clean the area around the fill plug. Remove the fill plug from the differential axle housing bowl (Fig. 4).
4. The oil level must be even with the bottom of the hole of the fill plug.
   a. If oil flows from the hole when the plug is loosened, the oil level is high. Drain the oil to the correct level.
   b. If the oil level is below the bottom of the hole of the fill plug, add the specified oil.
5. Install and tighten the fill plug to 35-50 lbf-ft (48-67 Nm).

1.4.2 Draining and Replacing the Oil

⚠ WARNING ⚠

Before servicing, park safely over a repair pit, apply parking brake, stop engine and set battery master switch to the "OFF" position.

1. Make sure the vehicle is parked on a level surface. Put a large container under the axle's drain plug.

NOTE

Drain the oil when the axle is warm.

2. Remove the drain plug from the bottom of the axle. Drain and discard the oil in an environment friendly manner.
3. Install and tighten the drain plug to 35-50 lbf-ft (48-67 Nm).
4. Clean the area around the fill plug. Remove the fill plug from the differential housing bowl.
5. Add the specified oil until the oil level is even with the bottom of the hole of the fill plug. Allow the oil to flow through the axle and check the oil level again (lube capacity 41 pints [13,3 liters]).

⚠ CAUTION ⚠

The differential overheats when the oil temperature rises above 250ºF (120ºC).

6. Install and tighten the fill plug to 35-50 lbf-ft (48-67 Nm).

1.4.3 Speed Sensors (Anti-Lock Brake system, ABS)

For removing and installing the drive axle speed sensors (for anti-lock brake systems, ABS), refer to Section 12: *''Brake and Air System''* and to Rockwell WABCO Maintenance Manual: *"Anti-Lock Brake Systems For Trucks, Tractors and Buses"*, annexed at the end of section 12.

1.5 REMOVAL AND REINSTALLATION

The following procedure deals with the removal of the drive axle assembly and its attachments as a unit. The method used to support the axle during removal and disassembly depends upon local conditions and available equipment.

1. Raise vehicle by its jacking points on the body (fig. 5 or see Section 18, *"Body"* under heading *"Vehicle Jacking Points").* Place jack stands under frame. Remove drive axle wheels (if required, refer to Section 13, *"Wheels, Hubs And Tires".*

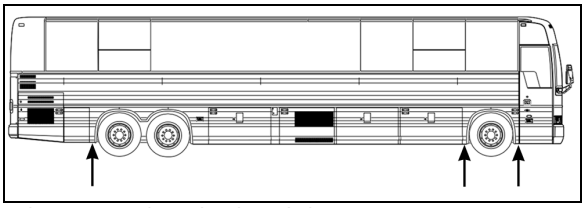

FIGURE 5: JACKING POINTS ON FRAME 11020

2. Exhaust compressed air from the air supply system by opening the drain cock on each air reservoir.
3. Disconnect the propeller shaft as directed in Section 9, *"Propeller Shaft",* in this manual.
4. On both sides of the vehicle, unscrew fasteners retaining front wheel housing plastic guards, and remove them from vehicle.
5. Disconnect both height control valve links from air spring mounting plate brackets then move the arm down to exhaust air suspension.
6. Remove cable ties securing the ABS cables (if vehicle is so equipped) to service brake chamber hoses. Disconnect the ABS cable plugs from the drive axle wheel hubs.

NOTE
When removing drive axle, if unfastening cable ties is necessary for ease of operation, remember to replace them afterwards.

7. Disconnect the brake chamber hoses.

NOTE
Position the hoses so they will not be damaged when removing the axle.

8. Install jacks under the axle jacking points to support the axle weight (refer to figure 6).

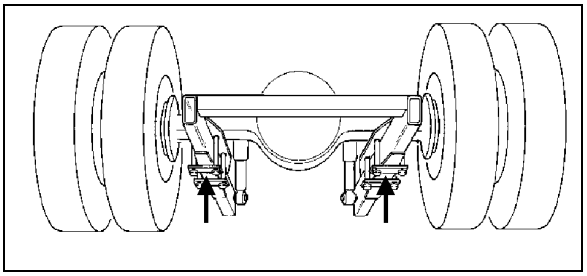

FIGURE 6: JACKING POINTS ON DRIVE AXLE H3B762

9. Remove the four shock absorbers as outlined in Section 16, *"Suspension"* under heading *"Shock Absorber Removal".*
10. Remove the sway bar.
11. Remove the lower and upper longitudinal radius rod supports from vehicle sub-frame as outlined in Section 16, *"Suspension",* under heading *"Radius Rod Removal".*
12. Remove the transversal radius rod support from the vehicle sub-frame.
13. Remove the two retaining nuts from each of the four air bellows lower mounting supports.
14. Use the jacks to lower axle. Carefully pull away the jacks axle assembly from underneath vehicle.
15. Reverse removal procedure to reinstall drive axle.

NOTE
Refer to Section 16, "Suspension" for suspension components' proper tightening torques.

NOTE
Refer to section 13 "Wheels, Hubs And Tires" for correct wheel bearing adjustment procedure.

1.6 DISASSEMBLY AND REASSEMBLY

Disassembly and re-assembly procedures are covered under applicable headings in Meritor's

"MAINTENANCE MANUAL, NO. 5", annexed to this section.

1.7 GEAR SET IDENTIFICATION

Gear set identification is covered under applicable heading in Meritor's *"MAINTENANCE MANUAL NO. 5",* annexed to this section.

1.8 ADJUSTMENTS

Adjustments are covered under applicable headings in Meritor's *"MAINTENANCE MANUAL NO. 5",* annexed to this section.

1.9 FASTENER TORQUE CHART

A differential fastener torque chart is provided in Meritor's *"MAINTENANCE MANUAL NO. 5",* annexed to this section.

1.10 TIRE MATCHING

Drive axle tire matching is covered under the applicable heading in Section 13, *"Wheels, Hubs And Tires"* in this manual.

1.11 DRIVE AXLE ALIGNMENT

NOTE
For *drive axle alignment specifications, refer to paragraph 3: "Specifications" in this section.*

The drive axle alignment consists in aligning the axle according to the frame. The axle must be perpendicular to the frame. The alignment is achieved with the use of shims inserted between the lower longitudinal radius rod supports and the frame.

Drive axle alignment is factory set and is not subject to any change, except if the vehicle has been damaged by an accident or if there are requirements for replacement.

If the axle has been removed for repairs or servicing and if all the parts are reinstalled exactly in the same place, the axle alignment is not necessary. However, if the suspension supports have been replaced or altered, proceed with the following instructions to verify or adjust the drive axle alignment.

NOTE
When drive axle alignment is modified, tag axle alignment must be re-verified.

1.11.1 Procedure

1. Park vehicle on a level surface, then chock front vehicle wheels.
2. Using two jacking points (which are at least 30 inches [76 cm] apart) on drive axle, raise the vehicle sufficiently so that wheels can turn freely at about ½ inch from ground. Secure in this position with safety stands, and release parking brake.
3. Install wheel mount sensors on front and drive axles (fig. 7). Adjust front axle according to appropriate specifications chart below.

NOTE
See reference numbers on wheel mount sensors (fig.7).

NOTE
Select axle specifications in the appropriate chart

FRONT AXLE
VEHICLES EQUIPPED WITH I-BEAM FRONT AXLE

Alignment / value	Minimum value	Nominal value	Maximum value
Right camber (degrees)	-0.250	0.125	0.375
Left camber (degrees)	-0.250	0.125	0.375
Right caster (degrees)	2	2.75	3.5
Left caster (degrees)	2	2.75	3.5
Total toe (degrees)	0.08	0.13	0.17

DRIVE AXLE ALIGNMENT

- With the system installed as for front axle alignment (fig.7), adjust drive axle according to specifications' chart below.

DRIVE AXLE ALL VEHICLES			
Alignment / value	Minimum value	Nominal value	Maximum value
Thrust angle (deg.)	-0.04	0	0.04

TAG AXLE ALIGNMENT

- Remove and reinstall all wheel mount sensors on the drive and tag axles (fig. 8);

NOTE
For an accurate alignment, the tag axle must be aligned with the drive axle.

NOTE
Reinstall wheel mount sensors as shown in figure 7. For example, the sensor from the right side of the front axle is mounted on the left side of the tag axle. For corresponding wheel mount sensor reference numbers, refer to figure 7.

- Adjust tag axle according to specifications' chart below in reference with drive axle.

TAG AXLE ALL VEHICLES			
Alignment / value	Minimum value	Nominal value	Maximum value
Parallelism (deg.)	-0.02	0	0.02

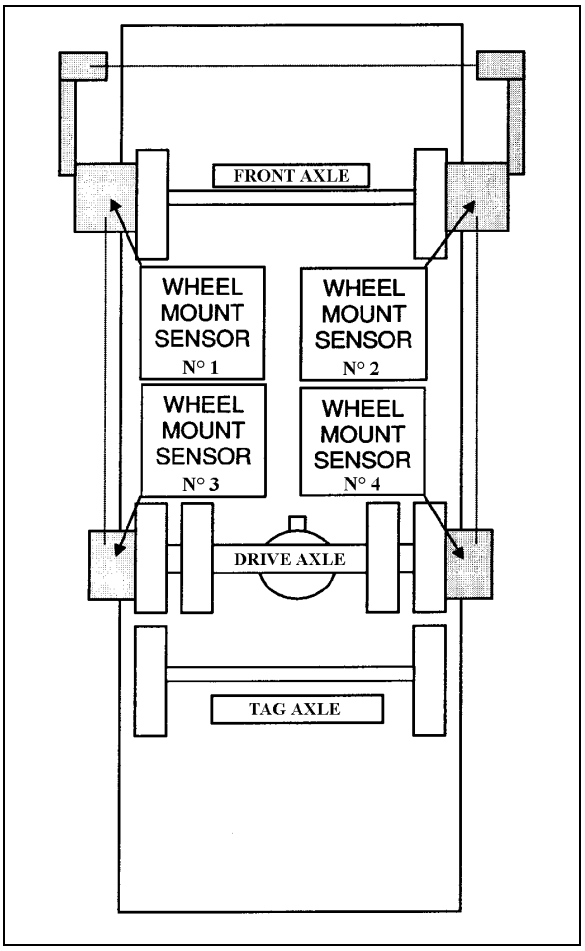

FIGURE 7: FRONT & DRIVE AXLE ALIGNMENT 11025

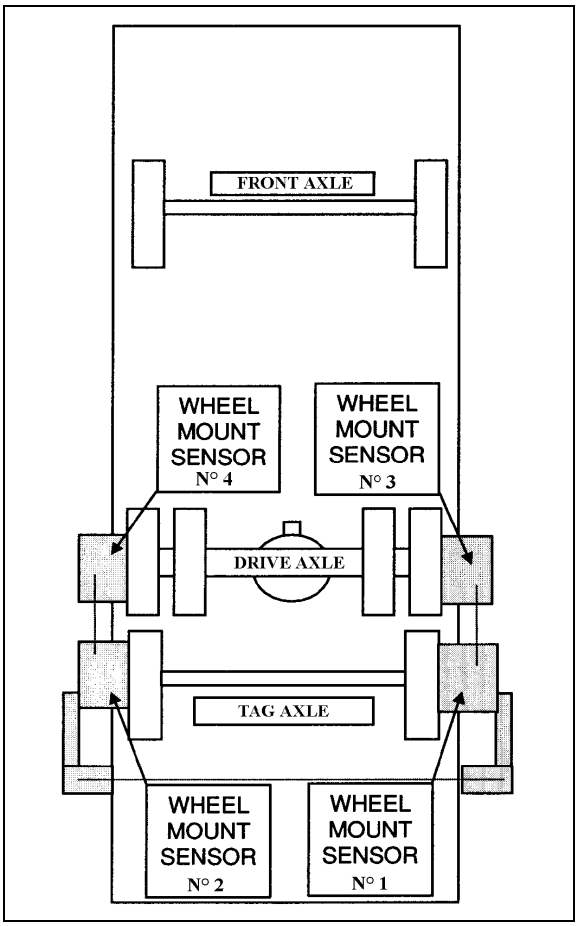

FIGURE 8: TAG AXLE ALIGNMENT 11026

NOTE
Refer to Section 16, "Suspension", for proper torque tightening of the longitudinal radius rod support nuts.

NOTE
When the drive alignment is changed, the tag alignment must also be adjusted.

1.12 AXLE SHAFT SEALING METHOD

The following method is to be used to ensure that axle shaft installation is fluid-tight:

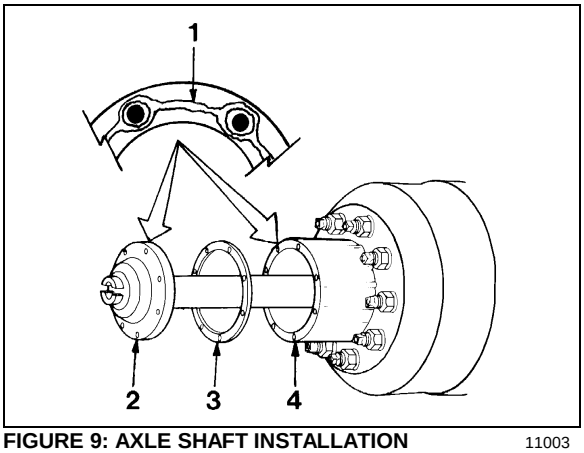

FIGURE 9: AXLE SHAFT INSTALLATION 11003

1.....Silicone sealant*
2.....Axle shaft
3..... Gasket
4..... Wheel hub

1. Clean the mounting surfaces of both the axle shaft flange and wheel hub where silicone sealant will be applied. Remove all old silicone sealant, oil, grease, dirt and moisture. Dry both surfaces.
2. Apply a continuous thin bead of silicone sealant* (Prévost P/N 680053) on the mounting surfaces and around the edge of all fastener holes of both the axle shaft flange and wheel hub.

* *GENERAL ELECTRIC Silicone Rubber Adhesive Sealant RTV 103 Black.*

⚠ WARNING ⚠

Carefully read cautions and instructions on the tube of silicone sealant and its packing.

3. Assemble components immediately to permit the silicone sealant to compress evenly between parts.
   a. Place a new gasket, then install the axle shaft into the wheel hub and differential carrier. The gasket and flange of the axle shaft must fit flat against the wheel hub.
   b. Install the tapered dowels at each stud and into the flange of the axle shaft. Use a punch or drift and hammer if needed.
   c. Install the lock washers and nuts on the studs. Tighten nuts to the correct torque value.

NOTE

Torque values are for fasteners that have a light application of oil on the threads (refer to Meritor Maintenance Manual).

9/16-18 plain nut: 110 - 165 lbf-ft (149 -224 Nm)

5/8-18 plain nut: 150 - 230 lbf-ft (203 - 312 Nm)

2. TAG AXLE

The tag axle is located behind the drive axle. It carries a single wheel and tire on each side. One optional system allows unloading of the tag axle air springs without raising the axle, while the other system enables unloading and raising of the tag axle (refer to the *"OPERATOR'S MANUAL"* for location of controls). Both these systems have been designed for the following purposes:

1. Shortening of wheelbase, thus allowing tighter turning in tight maneuvering areas such as parking lots or when making a sharp turn.
2. Transferring extra weight and additional traction to the drive wheels on slippery surfaces.

⚠ CAUTION ⚠

Never exceed 30 mph (50 km/h) with tag axle up or unloaded and resume normal driving as soon as possible.

The tag axle service brakes operate only when the axle is in normal driving (loaded) position.

2.1 GREASE LUBRICATED WHEEL BEARINGS

The unitized hub bearings used on the NDS range of axles, are non-serviceable items. Bearings are pre-adjusted, lubricated and have seals fitted as part of the manufacturing process. The bearings are greased for life and there is no need or facility for re-lubrication

Front and tag axle hub bearings need to be checked every 30,000 miles (48 000 km).

NOTE

For more information on front and tag axle wheel hub, refer to "DANA SPICER Maintenance Manual Model NDS and Maintenance Manual NDS Axles" annexed at the end of Section 10.

2.2 REMOVAL AND REINSTALLATION

The following procedure deals with the removal of the tag axle assembly along with the suspension components. The method used to support the axle and suspension components during removal and disassembly depends upon local conditions and available equipment.

1. Raise vehicle by its jacking points on the body (fig. 5 or see Section 18, *"Body"* under heading: *"Vehicle Jacking Points"*). Place jack under frame. Remove drive axle wheels (if required, refer to Section 13, *"Wheels, Hubs And Tires"*).
2. Exhaust compressed air from the air supply system by opening the drain cock on each air reservoir and deplete air bags by moving leveling valve arm down.

3. Install jacks under tag axle jacking points to support the axle weight (refer to figure 10).

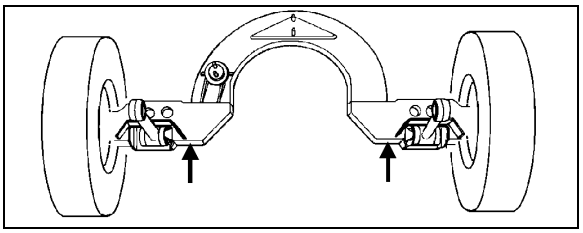

FIGURE 10: JACKING POINTS ON TAG AXLE 11023

4. Applies only to vehicles equipped with retractable tag axles: Disconnect tag axle lifting chain collars from lower longitudinal radius rods.
5. Remove the propeller shaft as directed in Section 9, *"Propeller Shaft",* in this manual.
6. Disconnect the tag axle brake chamber hoses.

⚠ CAUTION ⚠

Position the hoses so they will not be damaged when removing axle.

7. Disconnect hose from the air spring upper mounting plate.
8. Remove the two shock absorbers as outlined in Section 16, *"Suspension",* under *"Shock Absorber Removal".*
9. Disconnect the lower longitudinal radius rods as outlined in Section 16, *"Suspension",* under *"Radius Rod Removal".*
10. Disconnect the transversal radius rod.
11. Disconnect the upper longitudinal radius rod.
12. Remove the air bellows retaining nuts from each of the two upper mounting plates.
13. Use the jacks to move the axle forward to clear the axle off the transmission. Lower the axle.

⚠ CAUTION ⚠

On vehicles equipped with an automatic transmission (with or without the output retarder), move tag assembly very carefully. Pay special attention to the U-shaped section, as the transmission end components may be easily damaged through a false maneuver.

14. Reverse removal procedure to reinstall tag axle.

NOTE

Refer to Section 16, "Suspension", for proper torque tightening of suspension components.

NOTE

Refer to section 13 "Wheels, Hubs And Tires" for correct wheel bearing adjustment procedure.

2.3 TAG AXLE ALIGNMENT

The tag axle alignment consists in aligning the tag axle parallel to the drive axle position. Before aligning the tag axle, proceed with the drive axle alignment (paragraph 1.11). Tag axle alignment is achieved with the use of shims inserted between the lower longitudinal radius rod supports and axle. Tag axle alignment is factory set and is not subject to any change, except if vehicle has been damaged by an accident or if there are requirements for parts replacement.

⚠ CAUTION ⚠

If this setting is altered significantly, it will cause excessive tire wear.

NOTE

It may be necessary to adjust the axle TOE as well as its alignment. In this case, insert shims (7 min. - P/N 121203 or 15 min. - P/N 121240) in between mounting plate and spindle, as required.

If axle has been removed for repair or servicing and if all parts are reinstalled exactly in their previous locations, axle alignment is not necessary. However, if the suspension supports have been replaced or have changed position, proceed with the following instructions to verify or adjust the tag axle alignment.

3. SPECIFICATIONS

Drive Axle

Make .....Meritor
Drive track..... 76.7 inches (1 949 mm)
Gear type .....Hypoid
Axle type ..... Full floating
Lube capacity.....41 pints (19,3 liters)

Drive axle ratio

World Transmission

4.88:1 Standard
4.56:1 Optional

NOTE
The drive axle alignment consists in aligning the axle with reference to the frame. The axle must be perpendicular to the frame.

Tag Axle

Make .....Prévost
Rear track ..... 83.6 inches (2 124 mm)
Axle type ..... Dana Spicer Europe TS8U Hub Unit

NOTE
The tag axle alignment consists in aligning the tag axle parallel to the drive axle.

SECTION 12: BRAKE AND AIR SYSTEM

CONTENTS

1. AIR SYSTEM 12-5

2. BRAKES 12-5

3. AIR RESERVOIRS 12-5

3.1 MAINTENANCE 12-6
3.1.1 Wet (Main) Air Tank 12-6
3.1.2 Primary Air Tank 12-6
3.1.3 Accessory Air Tank 12-6
3.1.4 Emergency/Parking Brake Overrule Air Tank 12-6
3.1.5 Secondary Air Tank 12-6
3.1.6 Kneeling Air Tank 12-6
3.2 PING TANK 12-6

4. AIR SYSTEM EMERGENCY FILL VALVES 12-7

5. ACCESSORY AIR FILTER 12-7

5.1 FILTER ELEMENT REPLACEMENT 12-7
5.2 CLEANING 12-7

6. AIR GAUGES (PRIMARY, SECONDARY AND ACCESSORY) 12-7

7. AIR FILTER/DRYER 12-8

7.1 AIR FILTER/DRYER PURGE TANK 12-8

8. AIR LINES 12-8

8.1 COPPER PIPING 12-8
8.2 FLEXIBLE HOSES 12-8
8.3 NYLON TUBING 12-8
8.4 AIR LINE OPERATING TEST 12-9
8.5 AIR LINE LEAKAGE TEST 12-9
8.6 MAINTENANCE 12-9

9. PRESSURE REGULATING VALVES 12-9

9.1 MAINTENANCE 12-9
9.2 PRESSURE SETTING PROCEDURE 12-10

10. AIR COMPRESSOR (BA-921) 12-10

10.1 COMPRESSOR REMOVAL AND INSTALLATION 12-10

11. EMERGENCY/PARKING BRAKE CONTROL VALVE (PP-1) 12-11

12. EMERGENCY / PARKING BRAKE OVERRULE CONTROL VALVE (RD-3) 12-11

13. FLIP-FLOP CONTROL VALVE (TW-1) 12-11

14. DUAL BRAKE APPLICATION VALVE (E-10P) 12-11

14.1 BRAKE PEDAL ADJUSTMENT 12-12

14.1.1 Maintenance 12-12

15. STOPLIGHT SWITCHES 12-12

16. PARKING BRAKE ALARM SWITCH 12-12

17. BRAKE RELAY VALVE (R-12 & R-14) 12-12

18. QUICK RELEASE VALVES (QR-1) 12-13

19. SPRING BRAKE VALVE (SR-7) 12-13

20. PRESSURE PROTECTION VALVE (PR-4) 12-13

21. LOW PRESSURE INDICATOR (LP-3) 12-14

22. SHUTTLE-TYPE DOUBLE CHECK VALVE (DC-4) 12-14

23. EMERGENCY DOOR OPENING VALVES 12-14

24. AIR HORN VALVE 12-14

25. AIR SYSTEM TROUBLESHOOTING 12-14

26. BRAKE OPERATION 12-15

27. AIR BRAKES 12-15

27.1 DISC BRAKES 12-15
27.1.1 Disc Brake Pads 12-15
27.1.2 Caliper Maintenance 12-16
27.1.3 Roadside Inspection for Knorr/Bendix Air Disc Brakes 12-17
27.1.4 Pad Removal 12-17
27.1.5 Checking Pad Wear 12-18
27.1.6 Important Pad and Rotor Measurements 12-18
27.1.7 Checking Caliper Guidance and Seal Condition 12-18
27.1.8 Checking the Tappet Boots 12-19
27.1.9 Pad Installation 12-19
27.1.10 Adjusting the Running Clearance 12-19
27.1.11 Brake Tools 12-20
27.1.12 Checking Brake Pads 12-20
27.1.13 Torque specifications 12-20

28. SAFE SERVICE PROCEDURES 12-20

29. AIR BRAKE TROUBLESHOOTING 12-21

30. BRAKE AIR CHAMBER 12-24

30.1 MAINTENANCE 12-24
30.2 EMERGENCY/PARKING BRAKE MANUAL RELEASE 12-24
30.3 BRAKE CHAMBER REMOVAL 12-25
30.4 BRAKE CHAMBER INSTALLATION 12-25
30.5 BRAKE CHAMBER DISASSEMBLY 12-25

31. ANTI-LOCK BRAKING SYSTEM (ABS) 12-26

31.1 TROUBLESHOOTING AND TESTING 12-26
31.2 ABS COMPONENTS 12-26
31.2.1 Electronic Control Unit (ECU) 12-27
31.2.2 ABS Modulator Valve 12-27
31.2.3 Sensors 12-27
31.2.4 Sensor Installation 12-28
31.2.5 Spring clip 12-28

32. FITTING TIGHTENING TORQUES 12-30

33. SPECIFICATIONS 12-31

ILLUSTRATIONS

FIGURE 1: AIR RESERVOIRS LOCATION 12-5
FIGURE 2: REAR VALVE LOCATION (TYPICAL) 12-6
FIGURE 3: FRONT SERVICE COMPARTMENT 12-6
FIGURE 4: ACCESSORY AIR FILTER 12-7
FIGURE 5: HALDEX AIR FILTER DRYER 12-8
FIGURE 6: AIR PRESSURE REGULATING VALVE 12-9
FIGURE 7: AIR PRESSURE REGULATOR 12-10
FIGURE 8: AIR COMPRESSOR LOCATION 12-10
FIGURE 9: PP-1 12-11
FIGURE 10: RD-3 12-11
FIGURE 11: TW-1 12-11
FIGURE 12: BRAKE PEDAL ADJUSTMENT 12-12
FIGURE 13: DELCO SWITCH 12-12
FIGURE 14: BENDIX SWITCH 12-12
FIGURE 15: R-12 12-13
FIGURE 16: R-14 12-13
FIGURE 17: QR-1 12-13
FIGURE 18: SR-7 12-13
FIGURE 19: PR-4 12-13
FIGURE 20: LP-3 12-14
FIGURE 21: DC-4 12-14
FIGURE 22: THREE-WAY VALVE 12-14
FIGURE 23: BRAKE PAD CHECK 12-16
FIGURE 24: CLEARANCE INSPECTION 12-16
FIGURE 25: RUNNING CLEARANCE 12-16
FIGURE 26: ADJUSTER PINION 12-17
FIGURE 27: BOX WRENCH ON ADJUSTER PINION 12-17
FIGURE 28: CALIPER AXIAL MOVEMENT 12-17
FIGURE 29: BRAKE PAD CHECK 12-17
FIGURE 30: PAD REMOVAL 12-18
FIGURE 31: PAD WEAR 12-18
FIGURE 32: ROTOR AND PAD WEAR LIMITS 12-18
FIGURE 33: CALIPER GUIDANCE 12-19
FIGURE 34: RUBBER BOOTS 12-19
FIGURE 35: PAD INSTALLATION 12-19
FIGURE 36: RUNNING CLEARANCE 12-20
FIGURE 37: BRAKE PAD CHECK 12-20
FIGURE 38: TORQUE SPECIFICATION 12-20

FIGURE 39: TORQUE SPECIFICATION 12-20
FIGURE 40: AIR-OPERATED BRAKING SYSTEM XL2 12-22
FIGURE 41: FRONT AXLE BRAKE AIR CHAMBER 12-24
FIGURE 42: TAG AXLE BRAKE AIR CHAMBER 12-24
FIGURE 43: ABS ECU LOCATION 12-27
FIGURE 44: ABS MODULATOR VALVE 12-27
FIGURE 45: ABS SENSOR LOCATION 12-28
FIGURE 46: SPRING CLIP 12-28
FIGURE 47: ABS 4S/4M CONFIGURATION 12-29
FIGURE 48: HOSE FITTINGS 12-30
FIGURE 49: HOSE FITTING 12-30
FIGURE 50: HOSE FITTING 12-30
FIGURE 51: HOSE FITTING 12-30

1. AIR SYSTEM

The basic air system consists of an air compressor, reservoirs, valves, filters and interconnecting lines and hoses. It provides a means for braking, operating controls and accessories, and suspension (refer to Section 16, *"Suspension"*, for complete information on suspension description and maintenance). An air system schematic diagram is annexed in the technical publications box provided with the vehicle for better understanding of the system.

2. BRAKES

This vehicle uses both the service brake and emergency/parking brake. The service brake air system is divided into two independent circuits to isolate front brakes from rear brakes, thus providing safe breaking in the event that one circuit fails. Front axle brakes operate from the secondary air system, while brakes on both the drive axle and tag axle operate from the primary air system.

NOTE
The tag axle service brake operates only when the axle is in normal ride position (loaded and down).

Furthermore, the brake application or release, which is speed up by a pneumatic relay valve (R-12), will start with the rear axles and will be followed by the front axle, thus providing uniform braking on a slippery road. The vehicle is also equipped with an Anti-Lock Braking System (ABS), which is detailed later in this section.

The drive and tag axles are provided with spring-loaded emergency/parking brakes, which are applied automatically whenever the control valve supply pressure drops below 40 psi (275 kPa). The optional emergency/parking brake overrule system allows the driver to release spring brakes, and to move the vehicle to a safe parking place, such as in the case of a self-application of these brakes due to a drop in air pressure.

3. AIR RESERVOIRS

The air coming from the air dryer is first forwarded to the wet air tank, then to the primary (for the primary brake system), secondary (for the secondary brake system), and accessory (for the pneumatic accessories) air tanks (Fig. 1).

Two additional air reservoirs may be installed on the vehicle: the kneeling air tank and emergency / parking brake overrule air tank.

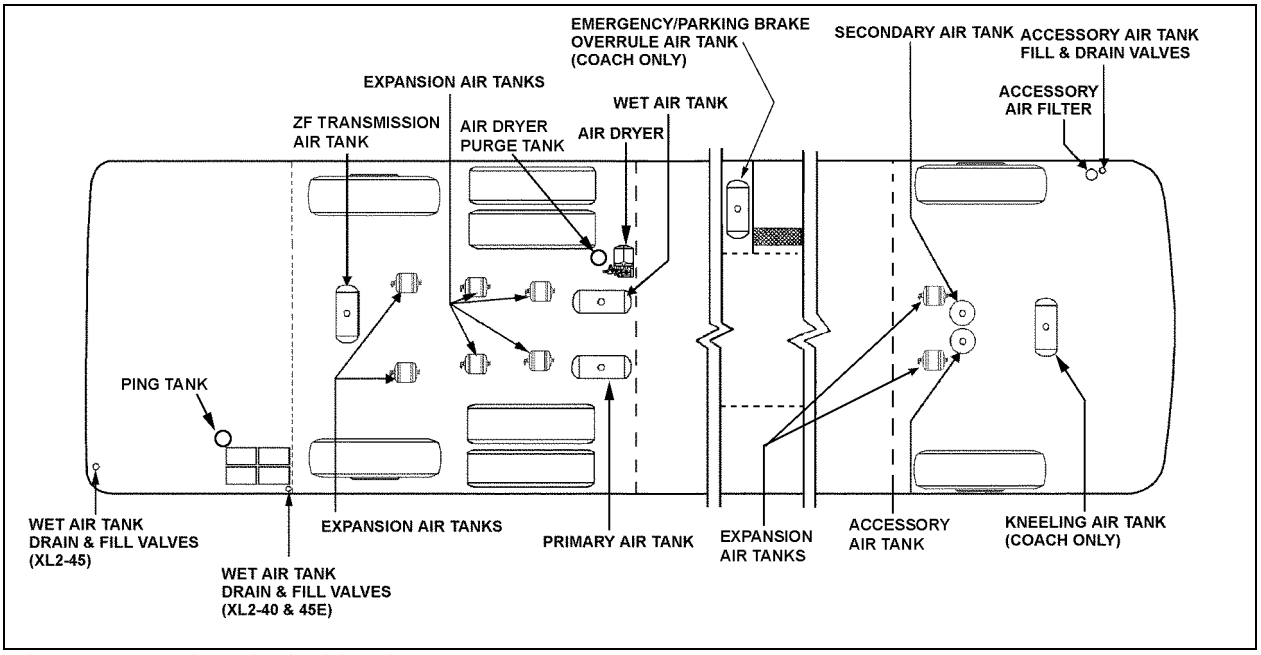

FIGURE 1: AIR RESERVOIRS LOCATION 24006

3.1 MAINTENANCE

Ensure that the wet (main) air tank is purged during pre-starting inspection. In addition, it is good practice to purge this reservoir at the end of every working day. The remaining reservoirs must be purged at every 12,500 miles (or 20 000 km) or once every year, whichever comes first.

3.1.1 Wet (Main) Air Tank

This reservoir, located above the L.H. wheel of drive axle in the rear wheelhousing, is provided with a bottom drain valve. A recommended purge using the bottom drain valve should be done every 12,500 miles (20 000 km), or once a year, whichever comes first.

3.1.2 Primary Air Tank

This reservoir is located above the R.H. wheel of the drive axle and is provided with a bottom drain valve (Fig. 1). It is recommended to purge the primary air tank every 12,500 miles (20 000 km) or once a year, whichever comes first.

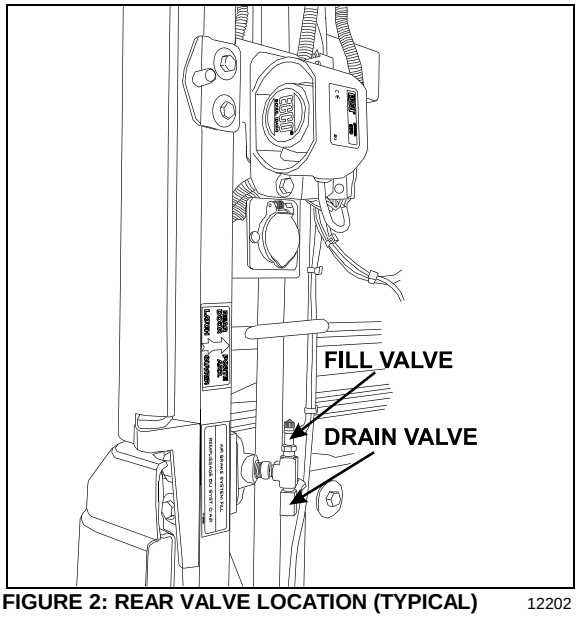

FIGURE 2: REAR VALVE LOCATION (TYPICAL) 12202

3.1.3 Accessory Air Tank

The accessory air tank is installed close to the front axle and is provided with a bottom drain valve (Fig. 1).

Purge the reservoir by it's drain valve every 12,500 miles (20 000 km) or once a year, whichever comes first.

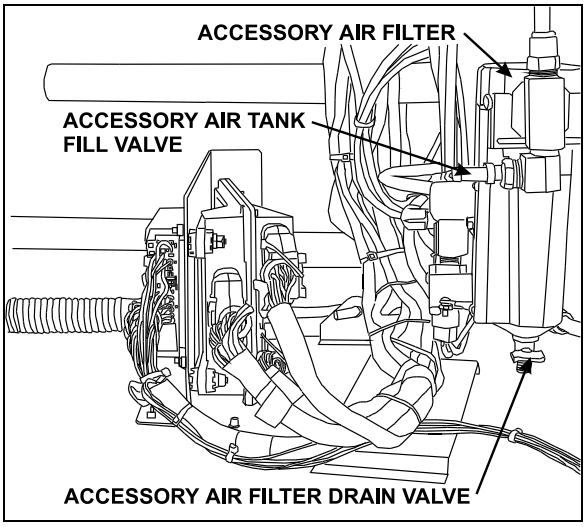

FIGURE 3: FRONT SERVICE COMPARTMENT 12201

3.1.4 Emergency/Parking Brake Overrule Air Tank

Installed on vehicles equipped with this option, this reservoir is located aft of the evaporator compartment (Fig. 1). It is provided with a bottom drain valve.

Purge this reservoir every 12,500 miles (20 000 km) or once a year, whichever comes first.

3.1.5 Secondary Air Tank

This tank is located in the front wheelhousing, behind the steering axle (Fig. 1). It is provided with a bottom drain valve.

Purge this reservoir every 12,500 miles (20 000 km) or once a year, whichever comes first.

3.1.6 Kneeling Air Tank

The kneeling air tank is installed on vehicles equipped with the Kneeling or Hi/Low-Buoy options. It is located in the front wheelhousing (Fig. 1), and is provided with a bottom drain valve.

3.2 PING TANK

The ping tank may be located behind the tag axle or in the engine compartment; in this case, it is accessible through the engine compartment R.H. side door. It is used to dissipate heat and to reduce noise produced by the air compressor cycling on and off.

4. AIR SYSTEM EMERGENCY FILL VALVES

All vehicles come equipped with two emergency fill valves that enable system pressurization by an external source such as an air compressor. The rear valve is located in the engine compartment and is accessible from engine R.H. side door (Fig 2.). It can be positioned close to the door hinge or the door opening.

⚠ CAUTION ⚠

Maximum allowable air pressure is 125 psi (860 kPa). Air filled through these two points will pass through the standard air filtering system provided by Prevost. Do not fill system by any point on the system.

The front valve is located in the front service compartment close to R.H. side of door frame (Fig. 3).

These two air system emergency fill valves are fitted with the same valve stems as standard tires, and can be filled by any standard external air supply line.

The rear air system emergency fill valve will supply air for all systems (brakes, suspension and accessories) while the front fill valve will supply air for accessories only.

5. ACCESSORY AIR FILTER

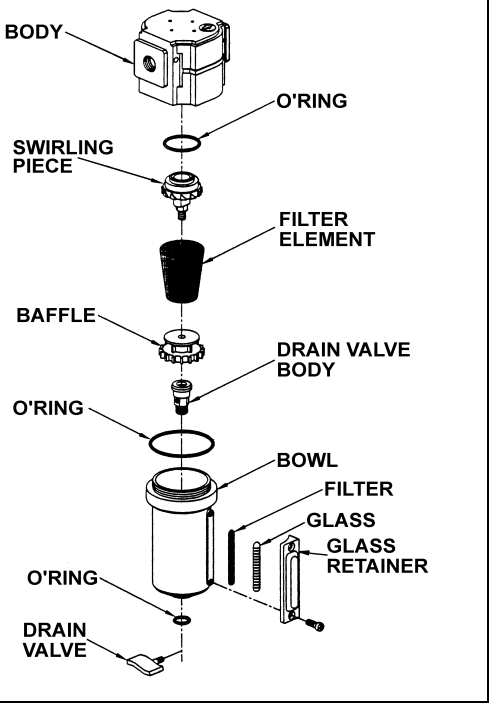

FIGURE 4: ACCESSORY AIR FILTER 12088

This filter is located inside the front service compartment (Fig. 3). Its main function consists in filtering the air supplied to the accessory air system, when connected to an external supply line. Ensure filter is purged whenever supplying the system with an external air line and at least every 12,500 miles (20 000 km). To purge, open drain valve (Fig. 4), let the moisture come out, then close the drain valve.

5.1 FILTER ELEMENT REPLACEMENT

Replace filter element whichever of the following occurs first: every 100,000 miles (160 000 km), every two years, or whenever differential pressure exceeds 15 psi (105 kPa) between filter inlet and outlet ports. Check condition of all three O'rings for damage. Replace when necessary (Fig. 4).

5.2 CLEANING

Clean filter body and bowl with a warm water and soap solution. Rinse thoroughly with clean water. Blow dry with compressed air making sure the air stream is moisture free and clean. Pay particular attention to the internal passages.

Inspect all parts for damage and replace if necessary.

6. AIR GAUGES (PRIMARY, SECONDARY AND ACCESSORY)

The air pressure gauges, located on the dashboard (see *"Operator's Manual" or "Owner's Manual"*), are connected to the DC-4 double check valve, located on the pneumatic accessory panel in the front service compartment.

The latter is connected to the air lines running from the primary and secondary air tanks, as shown on the pneumatic system diagram provided in the technical publications box. The accessory air gauge is connected to the accessory air tank using the drain valve connector. The vehicle should never be set in motion until the buzzer alarm and warning lights turn off, i.e. when air pressure registers at least 66 psi (455 kPa). Moreover, if pressure drops below 66 psi (455 kPa), the *"Low air pressure"* warning lights will turn on, and the *"Low air pressure"* buzzer will sound. Stop the vehicle immediately, determine and correct the cause(s) of pressure loss. Check the gauges regularly with an accurate test gauge. Replace the gauge with a new unit if there is a difference of 4 psi (27 kPa) or more in the reading.

7. AIR FILTER/DRYER

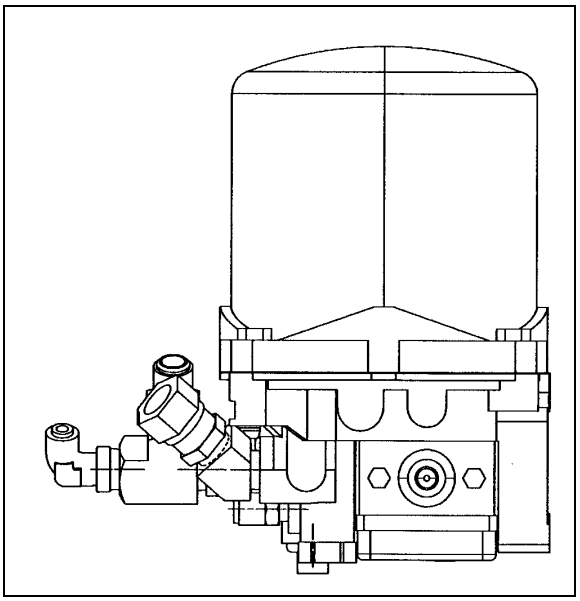

FIGURE 5: HALDEX AIR FILTER DRYER 12194

The air filter/dryer is located in front of rear wheelhousing above drive axle (Fig. 1 & 5). Its purpose is to remove moisture that could damage the air system before the air enters the system reservoir. The air filter/dryer also filters the air to remove dirt, compressor oil, and other contaminants that can damage the system. Change cartridge every 100,000 miles (160 000 km) or once every two years, whichever comes first. The air dryer may be purged for maintenance purposes using the remote drain valve located in the engine compartment and accessible through the engine compartment R.H. side door. The valve is positioned over the battery assembly, close to the door hinge or close to the L.H. side of door opening depending on type of vehicle (Fig. 2). The air filter/dryer has a built-in governor to maintain the system between 108 psig and 123 psig.

Maintenance and repair information is supplied in the maintenance information annexed to this section.

7.1 AIR FILTER/DRYER PURGE TANK

A tank is supplied to purge the air filter/dryer to remove moisture and contaminants.

8. AIR LINES

Copper piping, nylon-reinforced tubing, and flexible hoses are used to connect the units in the pneumatic system, including air brake system, suspension system and accessory systems such as the entrance door, fresh air damper cylinder, air horns, etc. Furthermore, the nylon tubing is color coded to ease identification. Refer to the following table for the complete color identification code. Service instructions for each type of air line are also provided under the applicable headings.

Color	Circuit
Red	Secondary
Green	Primary and Delivery
Yellow	Parking Brake
Blue	Suspension
Black	Accessory
Brown	Trailer Brake

8.1 COPPER PIPING

A heat dissipation copper piping assembly is used to dissipate the heat coming from the compressor before it enters the air filter/dryer. Connections should be checked for leakage at least every 6,250 miles (10 000 km) or twice a year, whichever comes first. Tighten or replace when necessary. When replacing copper piping, the parts must be free of burrs, copper cuttings, and dirt. Blow out piping with compressed air. Any such particles will destroy sealing seats in air control units. Also, new piping must be the same size as the old one.

8.2 FLEXIBLE HOSES

A flexible hose is used normally where it is impractical to use copper or nylon tubing due to constant flexing during operation, such as brake chamber hoses. Hose connections should be tested for leakage at least every 6,250 miles (10 000 km) or twice a year, whichever comes first and tightened or replaced if necessary. Any hose which is chafed, worn or kinked should be replaced.

Teflon-braided stainless steel hoses used in the engine compartment must be replaced only with similar hoses.

8.3 NYLON TUBING

Nylon tubing is used for air lines in areas where usage of this material is suitable. Nylon tubing is flexible, durable, and weather resistant. When

replacing an air line, use nylon tubing only where it has been used previously.

Nylon air lines must never be routed in areas where temperature could exceed 200°F (93°C).

⚠ CAUTION ⚠

Nylon air lines should be used to replace existing nylon lines only, and must comply with the color identification code to ease pneumatic system troubleshooting.

8.4 AIR LINE OPERATING TEST

If any trouble symptom such as slow brake application or slow brake release indicates a restricted or clogged air line, disconnect the suspected tube or hose at both ends and blow through it to clear the passage.

Inspect tubing and hose for partial restriction that may be caused by dents or kinks. If such a condition is found, the tubing or hose should be replaced.

8.5 AIR LINE LEAKAGE TEST

With air system fully charged and the brakes applied, coat all tubing and hose connections with a soapy solution to check for air leakage. No leakage is permitted. Leakage can sometimes be corrected by tightening the connection. If this fails to correct the leakage, new fittings, nylon tubing, copper tubing, teflon-braided stainless steel and flexible hoses must be installed as applicable.

8.6 MAINTENANCE

Inspect all lines for cuts, swelling, kinks or other damage or deterioration. Check for lines being pinched by other components. Retaining clips and ties must be in place.

Any support or bracket should be in good condition and mounted firmly in position. Hose spring guards should be in usable condition and not distorted. Particular attention should be given to long lines. Any supporting component (clips, ties, grommets, etc.) must be secured to prevent against unnecessary vibration and eventual loosening of connection. Any detected leak should be repaired. Be sure nylon lines are not near areas of intense heat. Check for any missing grommets or loose material where chafing or cutting may occur. Replace with new material as required. In general, lines should be securely located in position and free from any binding condition which would hinder air flow.

9. PRESSURE REGULATING VALVES

There is one pressure regulator for the belt tensioners, and an optional one installed on vehicles equipped with the world transmission output retarder.

The belt tensioner pressure regulating valve is located in the engine compartment above the doors and is used to limit the air pressure in belt tensioners to 50 ± 2 psi (345 ± 15 kPa) for coaches, WE and W0 MTH and to 45 ± 2 psi (310 ± 15 kPa) for W5 MTH (Fig. 7).

The optional regulator is located in the engine compartment (accessible through the engine R.H. side door). It is used for transmission retarder and should be adjusted to 80 ± 3 psi (550 ± 20 kPa).

	Air Pressure (psi)	Air Pressure (kPa)
Belt Tensioner	**series 60** 50 (coach, WE & W0) 45 (W5)	**series 60** 345 310
Retarder	80 ± 3	550 ± 20

9.1 MAINTENANCE

Every 100,000 miles (160 000 km) or once every two years, whichever comes first, disassemble the regulating valve and wash all metal parts in a cleaning solvent (Fig. 6). Examine the diaphragm; if cracked, worn or damaged, replace with a new one. If the valve is excessively grooved or pitted, it should be replaced. Replace any other part that appears worn or damaged. After reassembly, adjust to the specified pressure setting and check for air leakage.

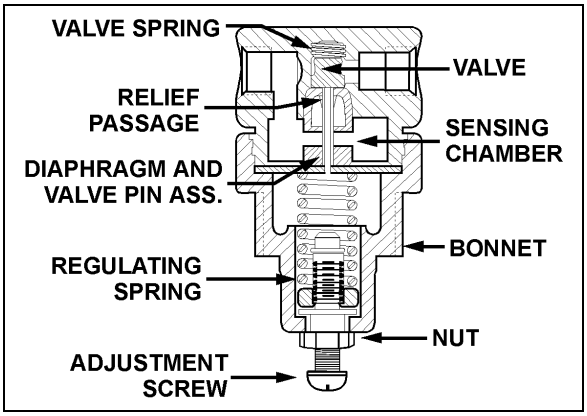

FIGURE 6: AIR PRESSURE REGULATING VALVE 12141B

9.2 PRESSURE SETTING PROCEDURE

Remove the dust cap from the pressure check valve (Fig. 7). Attach a pressure gauge at this port and check the pressure reading. If the pressure reading is incorrect, adjust as follows:

1. Loosen the locking nut, turn the adjustment screw counterclockwise to decrease pressure by approximately 10 psi (70 kPa) below the required pressure.
2. Turn the adjustment screw clockwise to increase the pressure slowly until the required pressure setting is reached. Tighten the locking nut.
3. Remove pressure gauge and replace dust cap on the air pressure check valve.

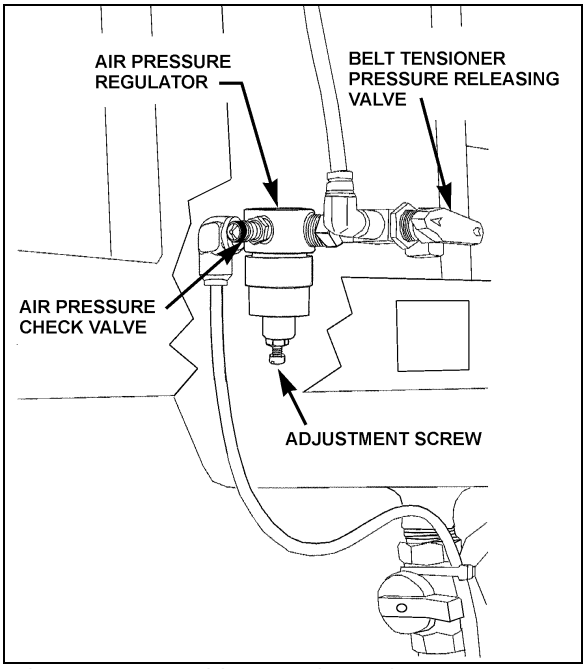

FIGURE 7: AIR PRESSURE REGULATOR 12200

10. AIR COMPRESSOR (BA-921)

The air compressor is located on starter side of the engine, on the rear of the engine gear case (Fig. 8). Its function is to provide and maintain air under pressure to operate devices in brake and air systems.

This air compressor also drives the engine fuel pump which is bolted to the rear end of the compressor. The compressor crankshaft is designed to accept a drive coupling which is placed between the compressor and fuel pump.

The compressor is driven by the bull gear, and is water cooled. Engine coolant is fed to the compressor through a flexible hose tapped into the block water jacket and connected to the rear of the compressor. Coolant returns from the top of the compressor (governor side) through a flexible hose to the engine pump.

The air is taken from the air intake manifold and entered in the top of the compressor. The compressed air is pushed into the discharge line located on side of the compressor, which sends air to the air dryer. Lubricating oil is supplied to the compressor by a line from the cylinder block oil gallery connected to the air compressor. Lubricating oil returns to the engine crankcase through the air compressor drive assembly.

Maintenance and repair information on the Bendix BA-921 air compressor is supplied in the applicable booklet annexed to this section under reference number SD-01-676.

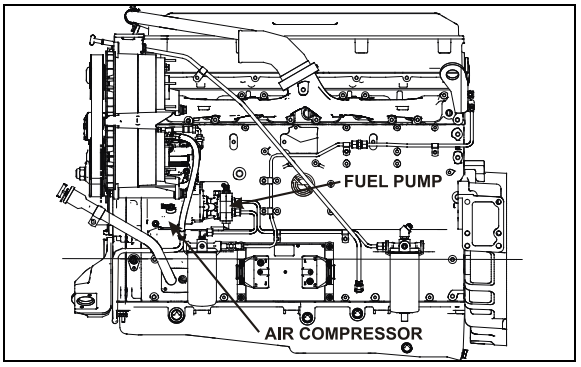

FIGURE 8: AIR COMPRESSOR LOCATION 03061

10.1 COMPRESSOR REMOVAL AND INSTALLATION

1. Exhaust compressed air from air system by opening the drain valve of each air tank.
2. Drain the engine cooling system. See Section 5: "*Cooling System*".
3. Identify and disconnect all air, coolant and oil lines from the compressor assembly.
4. Access the compressor by the engine R.H. side compartment. Remove the four compressor mounting bolts and the two fuel pump support bracket bolts.
5. Slide air compressor rearward to disengage the hub from coupling. Remove the air compressor.

Reverse removal procedure for installation.

11. EMERGENCY/PARKING BRAKE CONTROL VALVE (PP-1)

A push-pull control valve mounted on the L.H. lateral console is provided for parking brake application or release. The spring brakes are self-actuated whenever the control valve supply pressure drops below 40 psi (275 kPa). In the UP position, brakes are ON. In the DOWN position, brakes are RELEASED. A protective case around the knob prevents accidentally releasing the brakes.

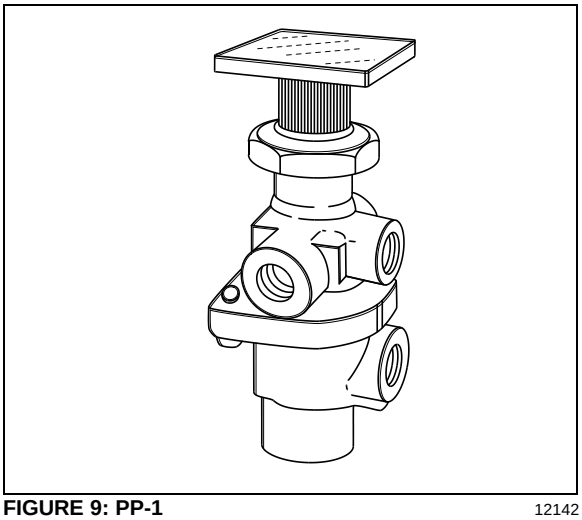

FIGURE 9: PP-1 12142

Maintenance and repair information on this valve is supplied in the applicable booklet annexed to this section under reference number SD-03-3611.

Remove the valve the following way:

1. Drain the air system.
2. Access this valve by tearing out the finishing panel, which holds the controls in place (Fig. 9).
3. Disconnect the air tubes.
4. Remove the retaining screws.
5. Service or replace the valve.
6. Installation is the reverse of removal.

12. EMERGENCY / PARKING BRAKE OVERRULE CONTROL VALVE (RD-3)

A RD-3 control valve is used with the optional parking brake overrule system. In the case of self-application of spring brakes due to a pressure drop, the brakes can be released by holding down this control valve. Maintenance and repair information on this valve is supplied in the applicable booklet annexed to this section under reference number SD-03-3611.

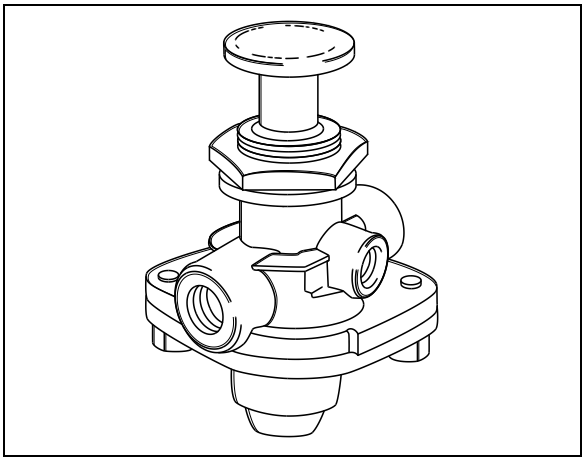

FIGURE 10: RD-3 12136

13. FLIP-FLOP CONTROL VALVE (TW-1)

A flip-flop control valve mounted on the L.H. lateral console is provided to unload tag axle air springs (and to lift tag axle if vehicle is so equipped). Another one controls the low-buoy system (coaches only). It is a manually operated "on-off" valve. Maintenance and repair information on this valve is supplied in the applicable booklet annexed to this section under reference number SD-03-3602.

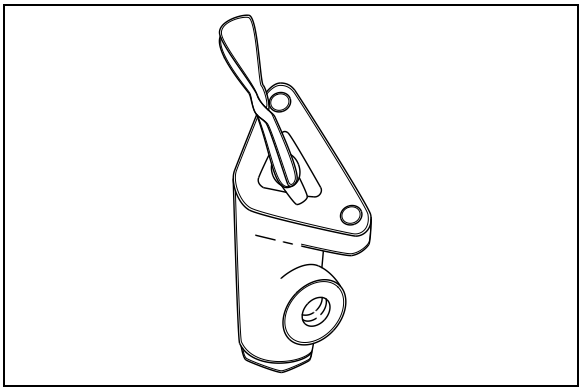

FIGURE 11: TW-1 12138

14. DUAL BRAKE APPLICATION VALVE (E-10P)

The E-10P dual brake valve is a floor mounted, foot-operated type brake valve with two separate supply and delivery circuits. This valve is located in the front service compartment (Fig. 12).

14.1 BRAKE PEDAL ADJUSTMENT

After brake pedal replacement or repair, adjust the pedal to its proper position according to the following procedure:

1. Replace the linkage, loosen threaded rod lock nuts and screw or unscrew the threaded adjustment rod in order to obtain a 45° brake pedal inclination (Fig. 12).
2. Tighten threaded rod lock nuts.

14.1.1 Maintenance

Maintenance and repair information on the E-10P dual brake application valve is supplied in the applicable booklet annexed to this section under reference number SD-03-830.

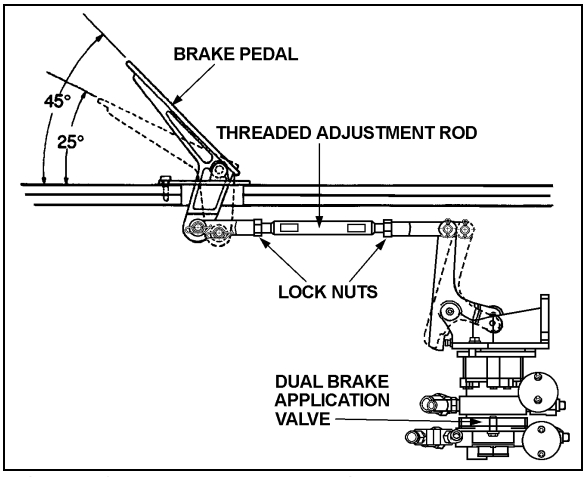

FIGURE 12: BRAKE PEDAL ADJUSTMENT 12208

15. STOPLIGHT SWITCHES

Two electro-pneumatic stoplight switches are mounted on the dual brake application valve (E-12). The upper one is used for the primary air circuit while the lower one is used for the secondary air circuit. Both switches are connected in parallel and have the same purpose, i.e. completing the electrical circuit and lighting the stoplights when a brake application is made. The upper switch (AC Delco) is designed to close its contact between 2 psi and 4 psi (14 kPa to 28 kPa) (Fig. 13), while the lower one (Bendix, SL-5) closes its contact at 4 psi (28 kPa) (Fig. 14). The switches are not serviceable items; if found defective, the complete unit must be replaced.

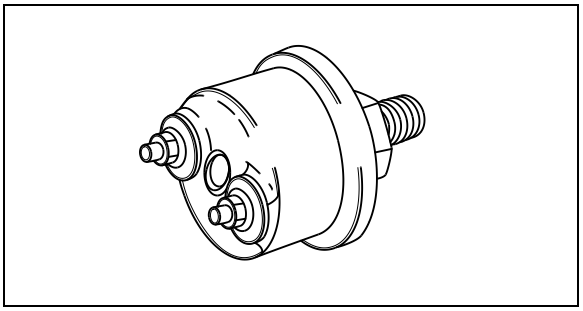

FIGURE 13: **DELCO SWITCH** 12139

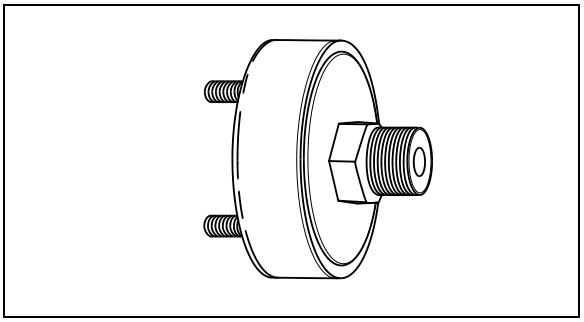

FIGURE 14: BENDIX SWITCH 12140

16. PARKING BRAKE ALARM SWITCH

Refer to the appropriate annexed booklet (Bendix, SL-5 Stop Light Switch; reference no. SD-06-2501).

The parking brake alarm uses the same switch as the stoplights. It is mounted on the spring brake valve and operates in conjunction with a NC relay to sound a warning alarm by completing the electrical circuit when the ignition key is turned OFF with parking brake released.

17. BRAKE RELAY VALVE (R-12 & R-14)

The primary air system includes three brake relay valves being supplied by the dual brake valve, and which function is to speed up the application and release of the service brakes.

One Wabco R-14 valve located in the rear underframe supplies the drive axle service brake air line, while the other two R-12 valves supply independently both the tag axle right and left service brake air line and act as interlock valves. These valves are accessible from under the vehicle at the level of the tag axle. Maintenance and repair information on these valves is supplied in the applicable booklet annexed to this section under reference number SD-03-1064.

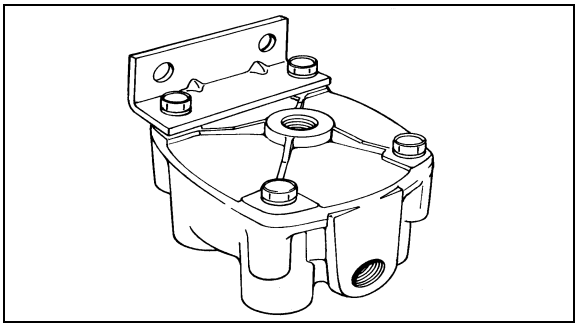

FIGURE 15: R-12 12074

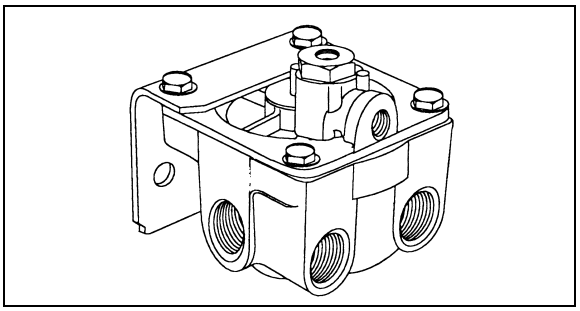

FIGURE 16: R-14 12207

18. QUICK RELEASE VALVES (QR-1)

The quick release valve is located on the front axle service brakes air line and permit rapid exhaust of air pressure from brakes, thus decreasing the brake release time.

Maintenance and repair information on this valve is supplied in the applicable booklet annexed to this section under reference number SD-03-901.

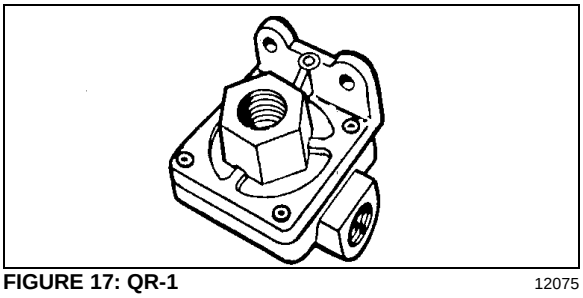

FIGURE 17: QR-1 12075

19. SPRING BRAKE VALVE (SR-7)

The spring brake valve is located in the rear underframe. The SR-7 Modulating Valve is used in conjunction with a dual air brake system and spring brake actuator and performs the following functions:

- Provides a rapid application of the spring brake actuator when parking.
- Modulates the spring brake actuator application using the dual brake valve should a primary failure occur in the service brake system.
- Prevents compounding of service and spring forces.

Maintenance and repair information on the spring brake valve is supplied in the applicable booklet annexed to this section under reference number SD-03-9043.

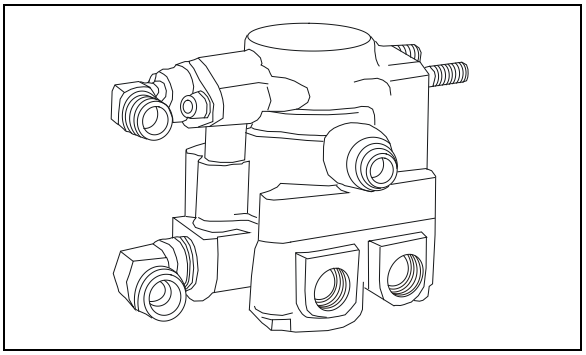

FIGURE 18: SR-7 12206

20. PRESSURE PROTECTION VALVE (PR-4)

Maintenance and repair information on the pressure protection valve is supplied in the applicable booklet annexed to this section under reference number SD-03-2010.

The air system includes two pressure protection valves (Fig. 19). One valve is installed on the manifold block, and insures at all times a minimum pressure of 70 psi (482 kPa) in the suspension air system in the event that a pressure drop occurs in either the suspension air system or accessory air system. This valve is located in the front service compartment beside the air filter.

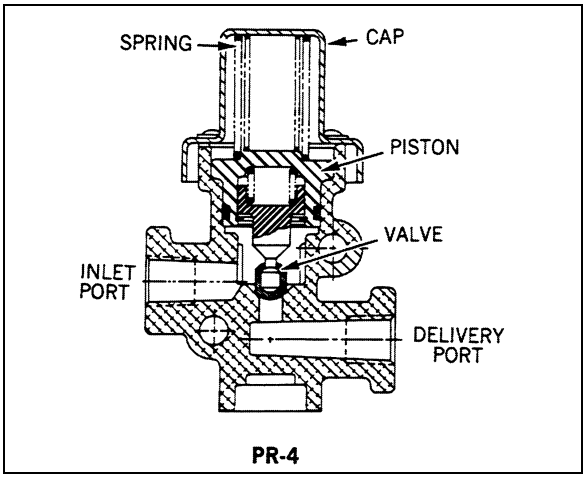

FIGURE 19: PR-4 12174

The other valve is installed on the accessory air tank, and insures a minimum pressure of 70 psi (482 kPa) in the accessory air system in the event that a pressure drop occurs in either the suspension air system or braking air system (refer to Fig. 1 for accessory air tank location).

21. LOW PRESSURE INDICATOR (LP-3)

Maintenance and repair information on the low pressure indicators is supplied in the applicable booklet annexed to this section under reference number SD-06-1600.

The air system includes two low pressure switches (Fig. 20), both located on the pneumatic accessory panel in the front service compartment. One serves for the parking brake signal, its pressure setting is 66 ± 6 psi (455 ± 40 kPa). The remaining pressure switch monitors the parking brake telltale panel indicator; its pressure setting is 30 psi (205 kPa).

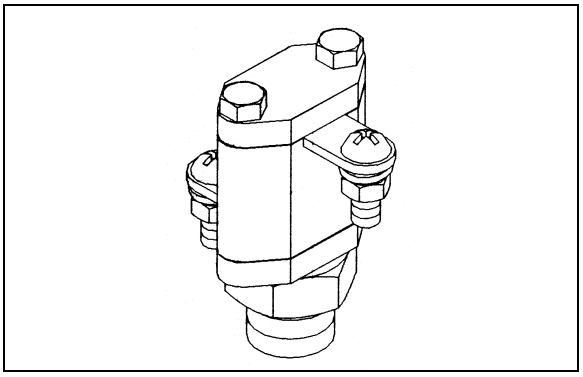

FIGURE 20: LP-3 12078

22. SHUTTLE-TYPE DOUBLE CHECK VALVE (DC-4)

Maintenance and repair information on the shuttle-type double check valve is supplied in the applicable booklet annexed to this section under reference number SD-03-2202.

The double check valve is located on the pneumatic accessory panel in the front service compartment. In the event of a pressure drop in either the primary or secondary system, this unit will protect the emergency /parking brake control valve and the intact portion of the air system from pressure loss.

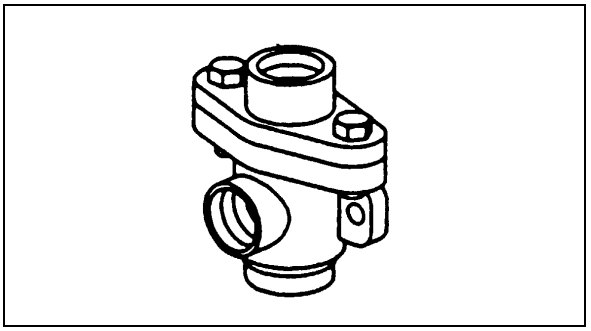

FIGURE 21: DC-4 12134

23. EMERGENCY DOOR OPENING VALVES

Two emergency door opening three-way valves are installed on coaches. One is in the front service compartment, readily accessible. The other one is on the R.H. side lateral console, close to the entrance door. When used, the valve releases pressure in the door locking cylinder, thus allowing the door to be manually opened.

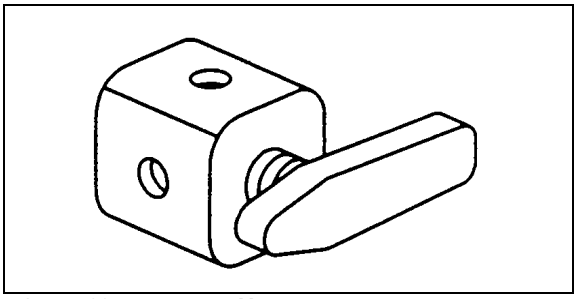

FIGURE 22: THREE-WAY VALVE 12186

24. AIR HORN VALVE

The air horn valve is located in the L.H. front service compartment. The air horn button is on the center of the steering wheel. Refer to section 23 “ACCESSORIES” for more information.

25. AIR SYSTEM TROUBLESHOOTING

The following list has been designed to help in troubleshooting some of the most common problems in the air system and main causes. For air brakes troubleshooting, refer to “*Air Brakes Troubleshooting”* in this section. For more troubleshooting information, refer to the manufacturer's brochures annexed to this section.

Air pressure doesn't rise to, or doesn't maintain, a normal setting:

- Defective air gauge (registering incorrectly).
- Excessive leaking in air system.
- Reservoir drain cock open.
- Governor poorly adjusted or defective.
- Defective compressor.
- Worn compressor or excessive wear on piston and/or ring.
- Air pressure rises to normal setting too slowly.

Excessive leaking in air system:

- Clogged engine air cleaner.
- Worn compressor or excessive wear on piston and/or ring.
- Engine speed too low.

Air pressure rises above a normal setting:

- Defective air gauge (registering incorrectly).
- Governor poorly adjusted or defective.
- Restriction in line between governor and compressor unloading mechanism.

Air pressure drops quickly when engine is stopped:

- Leaks in compressor discharge valve.
- Leaks in governor.
- Leaks in air lines.
- Leaks in air system valves.

26. BRAKE OPERATION

The vehicle braking system uses both service and parking air-operated brakes. The air system is divided into two independent circuits to isolate the front axle brakes and the rear axle brakes (drive and tag), thus providing safe brake operation in the event that one circuit of the system fails. The primary circuit is connected to the drive and tag axle brakes, while the secondary circuit is connected to the front axle brakes. The tag axle service brakes operate only when the axle is in the normal driving (loaded) position. The spring-type emergency brakes are mounted on the drive and tag axles, and will apply automatically if primary system pressure falls below 40 psi (276 kPa). The optional parking brake override system can cancel the parking brakes, enabling the driver to move the vehicle to a safe parking place. To operate this system, push down and hold the control knob located on the R.H. side of the driver's seat (see *"Operator's Manual"* for more details).

Furthermore, brake application or release, which is speed up by a pneumatic relay valve (R-12), will start with the rear axles and be followed by the front axle, thus providing uniform braking on a slippery surface. The vehicle may also be equipped with an Anti-lock Brake System (ABS), detailed later in this section.

Brake and air system maintenance consists of periodic inspections. Check all parts for damage and brake adjustment (refer to subsequent headings in this section for more details). Ensure all fasteners are tight (refer to "*Specifications"* for recommended tightening torques).

27. AIR BRAKES

27.1 DISC BRAKES

Knorr-Bremse SB7000 disc brakes are used on all axles. The front and drive axle discs are actuated by 24 square inch effective area air brake chambers, while on tag axle, the brake chambers have a 16 square inch effective area for service brake and a 16 square inch effective area for emergency/parking brakes. The *Knorr-Bremse SB7000* brakes are supplied with automatic clearance (slack) adjusters as standard equipment for easier adjustment. For more information on disc brake components and maintenance, refer to the manufacturer's brochure at the end of this section.

27.1.1 Disc Brake Pads

Brake pads have to be checked on a regular basis depending on the vehicle operation. The remaining thickness of the pads should never be less than 3/32 in (2 mm). To check pad condition without removing the wheel, verify the position of guide bushing (6) relatively to guide sleeve (4) (see Fig. 23). When guide sleeve is in alignment with guide bushing, brake pad thickness has to be checked more precisely with the wheel removed. When replacing brake pads, all four pads on an axle have to be changed at the same time. There is no inner or outer pad, since all pads are the same. Once removed, worn pads should be replaced in their original position.

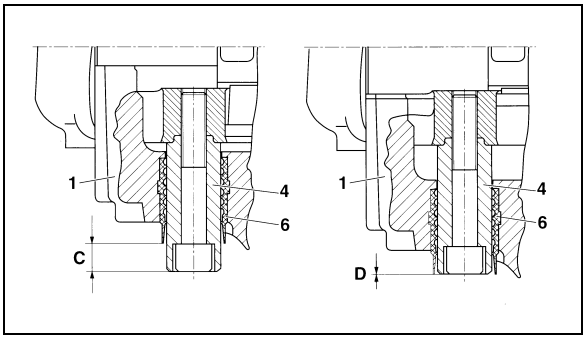

FIGURE 23: BRAKE PAD CHECK 12117

27.1.2 Caliper Maintenance

Use the following procedure for brake calipers servicing. The procedure must be followed in proper sequence to ensure that only needed repairs or replacements are performed on calipers. Problems such as hot brakes or cracked rotors may be effects of sticking calipers, too-small clearance between rotor and pad or possible trapped air pressure in the brake chamber. If any of these symptoms occur, perform this procedure before replacing the rotor to ensure the cause of the problem is properly solved.

1. Check for presence of residual pressure:

To check if there is any residual air pressure in the brake chamber, make four or five brake applications, then try to turn the wheel manually, if the wheel does not turn, use a wrench to crack the air line and listen for trapped air in the brake chamber then try to turn the wheel manually again. If you find trapped air in the brake booster, ensure that all pneumatic components in the braking system are functioning properly.

NOTE
A residual pressure of 2-3 PSI in the system is sufficient to prevent the brakes from releasing. Also the stop light switch can operate with as little as 1 PSI, therefore an illuminated brake light does not mean brakes are dragging.

2. Pad to rotor clearance inspection:

Remove clip and washer (26 & 45, Fig. 24), push down retainer bar (11), pull out pin (44) and remove retainer bar. Push caliper toward actuator (center of vehicle) for maximum clearance.

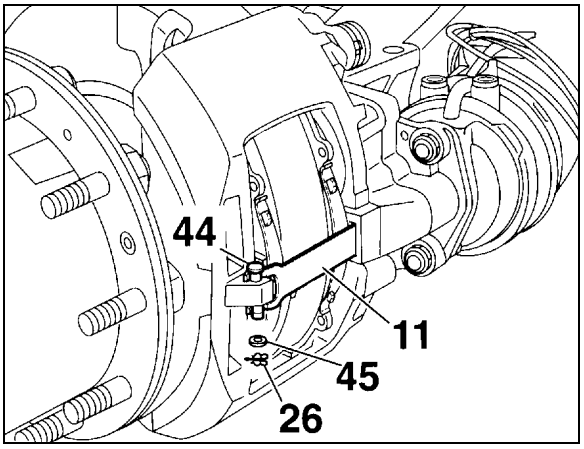

FIGURE 24: CLEARANCE INSPECTION 12119

3. Measure pad to rotor clearance:

Place a long feeler gauge (long enough to measure across entire tappet surface) between the tappet and the backing plate of the pad, measure clearance at both tappets. Clearance should range between 0.020 and 0.035 inch (0.5 mm and 0.9 mm), with a maximum difference between tappet measurements on same brake of 0.008 inch (0.2 mm).

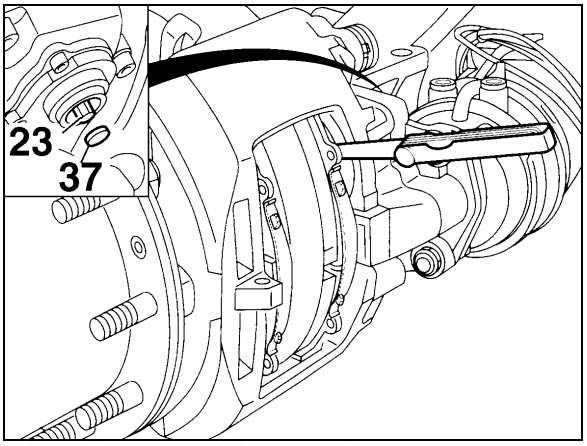

FIGURE 25: RUNNING CLEARANCE 12116

4. Checking the adjuster

⚠ WARNING ⚠
Use only a standard box wrench on the adjuster hexagonal pinion. Do not over-torque the pinion as overtorquing will damage the pinion.

a) Remove cap (37, Fig. 26).

b) Using a box wrench (8 mm), turn the adjuster pinion (23, Fig. 26) counterclock-wise about 2 - 3 clicks to increase running clearance. By operating the braking system

about 5 - 10 times (30 PSI or 2 bar), the wrench should turn clockwise in small increments if the adjuster is functioning correctly (Figs. 26 and 27).

NOTE
With increasing number of applications, the incremental adjustment will decrease.

c) In case of malfunction, i. e. the pinion or box wrench:

i) Does not turn.

ii) Turns only with the first application.

iii) Turns forwards then backwards with every application.

In any of the above cases, the automatic adjuster has failed and the caliper must be replaced. In such cases the brakes can be adjusted manually to run a short distance.

d) Take the box wrench off. Replace the cap and check for proper sealing.

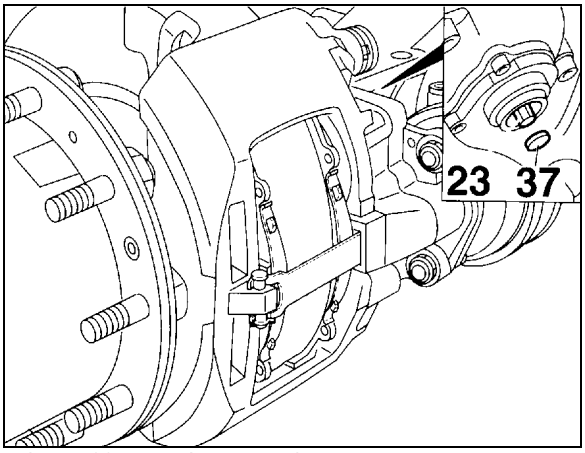

FIGURE 26: ADJUSTER PINION 12120

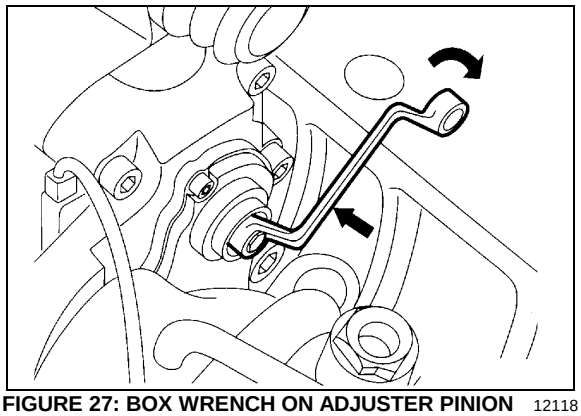

FIGURE 27: BOX WRENCH ON ADJUSTER PINION 12118

27.1.3 Roadside Inspection for Knorr/Bendix Air Disc Brakes

The coach is equipped with air disc brakes and therefore, cannot be inspected using the requirements for chamber stroke or visible lining clearance or lining thickness as specified for drum brakes. The roadside inspector should use the following instructions to determine that the air disc brakes are within proper adjustment and have sufficient pad wear thickness.

The Knorr/Bendix air disc brake is designed to move freely, with minimal force, in the axial direction on the two sliding pins as identified in figure 28. The movement in the axial direction should not exceed 2 mm (5/64”).

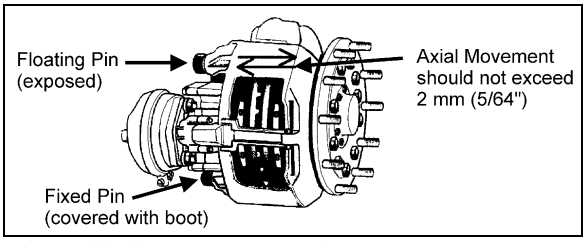

FIGURE 28: CALIPER AXIAL MOVEMENT 12132

The pad thickness can be seen but would require removal of the tire and rim. An indicator of the pad wear condition is available by inspecting the floating pin location in relation to the rubber bushing as shown in figure 29. When pads are in new thickness condition, the pin will be exposed (C) 19 mm (¾”). When the pads are worn to replacement conditions, the pin will be nearly flush to the bushing (D) or within 1 mm (3/64”) of the edge of the rubber bushing.

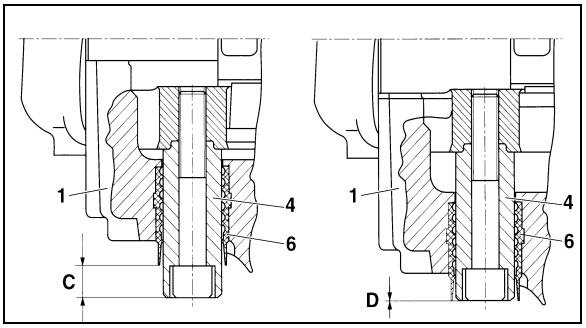

FIGURE 29: BRAKE PAD CHECK 12117

27.1.4 Pad Removal

Turn adjuster pinion (23) counterclockwise to increase pad to rotor clearance (a clicking noise will be heard). Push caliper toward actuator and remove pads (12).

⚠ CAUTION ⚠

Do not apply brakes while pads are removed as this could cause over stroke damage to the adjusting mechanism.

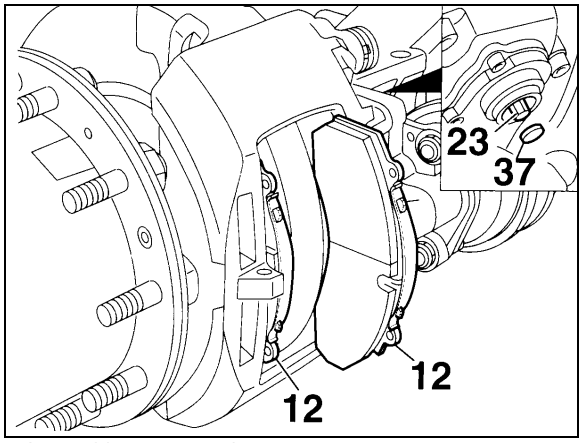

FIGURE 30: PAD REMOVAL 12111

27.1.5 Checking Pad Wear

Minimum friction material thickness is 2 mm (A, Fig. 31)

New friction material has a thickness of 21 mm (B, Fig. 31)

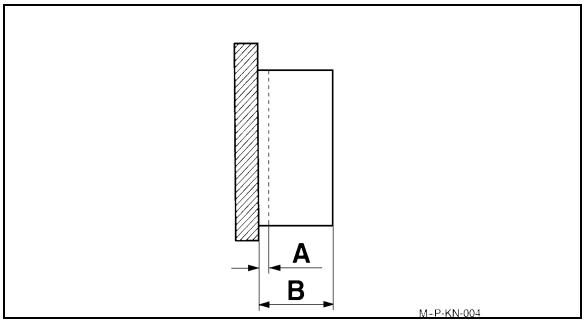

FIGURE 31: PAD WEAR 12112

27.1.6 Important Pad and Rotor Measurements

A = Rotor thickness (new): 45 mm;

B = Rotor thickness (worn): 37 mm. Requires replacement;

C = Overall thickness of pad (new): 30 mm;

D = Backplate: 9 mm;

E = Minimum thickness of pad material: 2 mm;

F = Minimum allowed thickness of overall backplate and friction material: 11 mm. **Replacement necessary**.

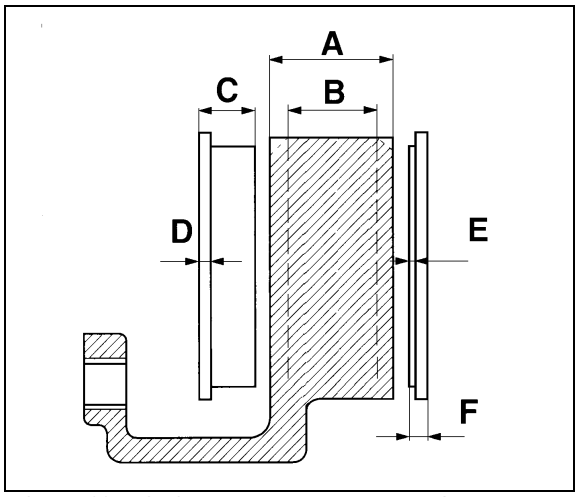

FIGURE 32: ROTOR AND PAD WEAR LIMITS 12113

27.1.7 Checking Caliper Guidance and Seal Condition

Perform sliding test. You must be able to slide the caliper easily at any time. Sliding test should be performed at least every three months or more often depending on the type of operation.

Sliding Test (Refer to Fig. 33):

a) Using hand pressure only, the caliper (1) must slide freely with its guide pin arrangements (4-7) across a distance of 1 3/16 inch (30 mm) when the pads are removed. The sleeve (5) is sealed using the boot (9) and the cap (10).

b) The rubber components (9 and 10) should show no damage. The positioning must be checked. If necessary the caliper has to be repaired using the guide kit (part #611168) or with the seal and guide kit (part #611199). When repairing a caliper with the above kits, make sure all parts in the kit are used. Use special green grease (Prévost #683344) to reassemble the slide pin into the bushing, white or yellow grease (Prévost #683345) may be used for all other lubrication needs.

c) Depending on caliper manufacturing date, black paint may be present on the unsealed pin (short pin). Paint on the slide pin can prevent the caliper from sliding properly especially when the pad starts to wear. If paint is present on the pin, separate the pin from the bushing, clean and reinstall the pin according to procedure.

NOTE

Do not attempt to use thinner or alcohol to clean the pin without removing it as it may damage the rubber bushing.

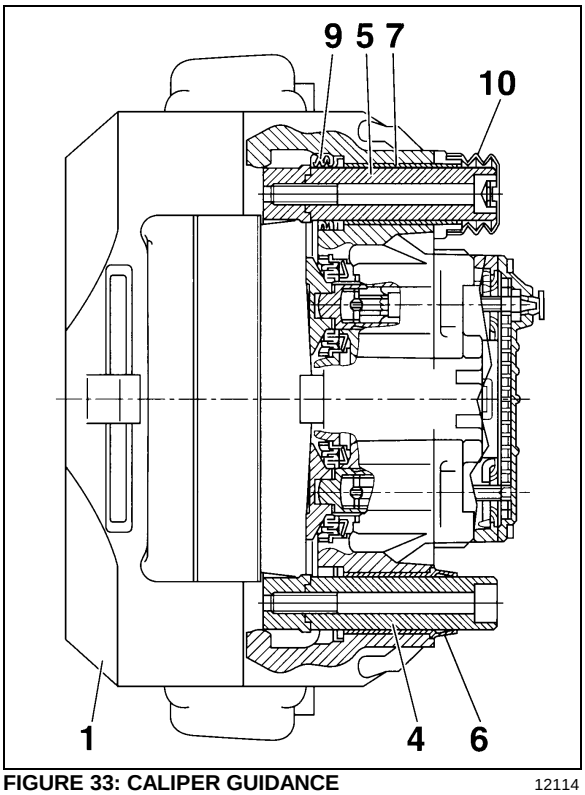

FIGURE 33: CALIPER GUIDANCE 12114

27.1.8 Checking the Tappet Boots

a) The rubber boots (13, Fig. 34) should show no damage, check the attachment.

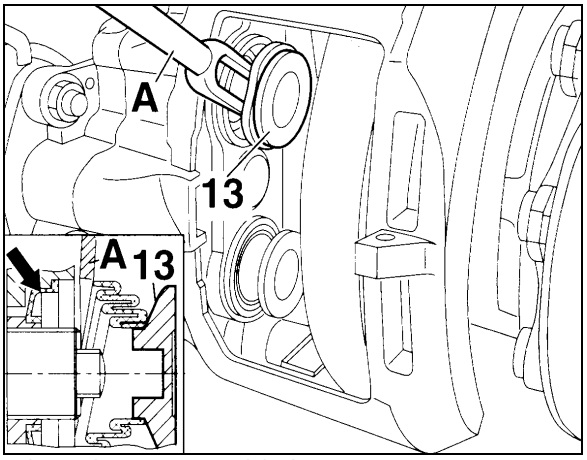

FIGURE 34: RUBBER BOOTS 12115

⚠ CAUTION ⚠

Any ingress of water and dirt will lead to corrosion and may affect the function of the actuation mechanism and adjuster unit.

b) If boots are damaged but show no corrosion, the boots and tappets should be replaced (Prévost #611177).

27.1.9 Pad Installation

Turn adjuster pinion (23, Fig. 35) counterclockwise until tappets are fully retracted and clean pad seat area. Slide caliper to full outboard position and install outside pad. Slide caliper to full inboard position and install inside pad.

⚠ WARNING ⚠

It is recommended to change all pads on an axle at the same time.

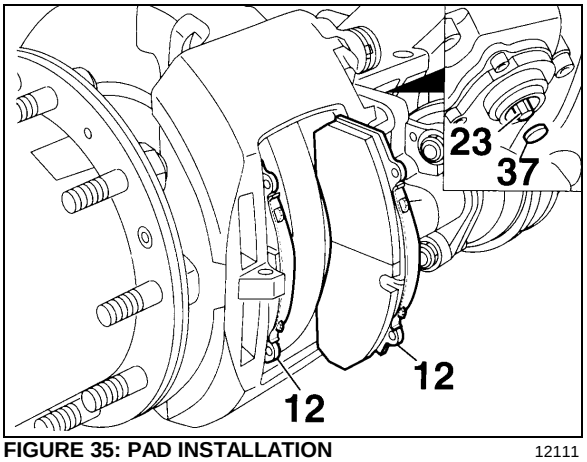

FIGURE 35: PAD INSTALLATION 12111

27.1.10 Adjusting the Running Clearance

a) Insert a feeler gauge 0.028 inch (0.7 mm thickness) between tappet and pad backplate (Fig. 36). Turn adjuster pinion clockwise until 0.028 inch (0.7 mm) clearance is achieved. Replace cap (37) (Prévost # 641313).

b) To ensure a constant running clearance between the rotor and pads, the brake is equipped with an automatic adjuster unit. When the pads and rotor wear, the running clearance between the pads and rotor increases. The adjuster (23, Fig. 36) and turning device turn the threaded tubes by the amount necessary to compensate the wear.

Total running clearance should be between 0.020 and 0.035 inch (0.5 and 0.9 mm). Smaller clearances may lead to overheating problems.

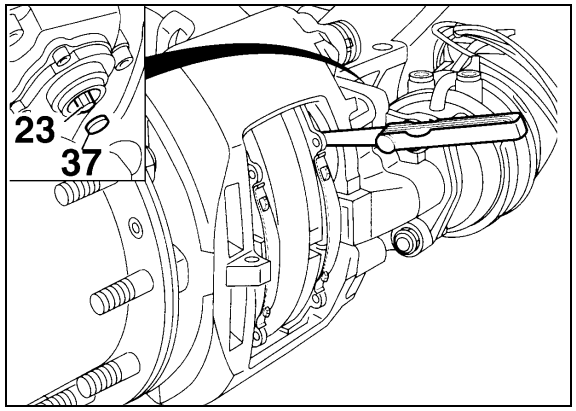

FIGURE 36: RUNNING CLEARANCE 12116

27.1.11 Brake Tools

Four brake tools are available from Prévost to facilitate disc brake maintenance:

a) #641321, Tappet with boot (item 13).
b) #641322, Caliper inner boot (item 9).
c) #641323, Caliper bushing (item 7).
d) #641435, Fork for boot tappet (item 13).

Maintenance tip

Using the following procedure, pad wear can be determined without removing the wheel.

27.1.12 Checking Brake Pads

Brake pads have to be checked on a regular basis depending on the vehicle operation. The remaining thickness of the pads should never be less than 3/32 inch (2 mm). To check pad condition without removing the wheel, verify the position of guide bushing (6) relatively to guide sleeve (4) (Fig. 37). When guide sleeve is in alignment with guide bushing, brake pad thickness must be checked more precisely with wheel removed. When replacing the brake pads, all four pads on an axle have to be changed at the same time. There is no inner or outer pad, since all pads are the same. Worn pads should be replaced in the same position.

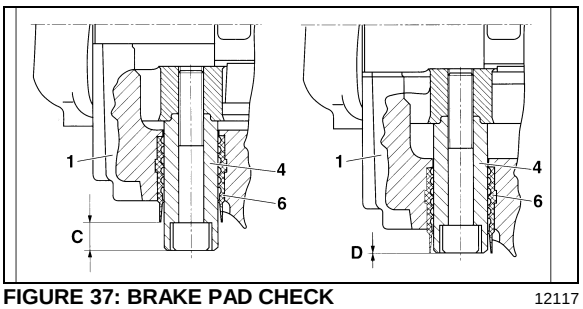

FIGURE 37: BRAKE PAD CHECK 12117

27.1.13 Torque specifications

For proper caliper maintenance, refer to the following figures.

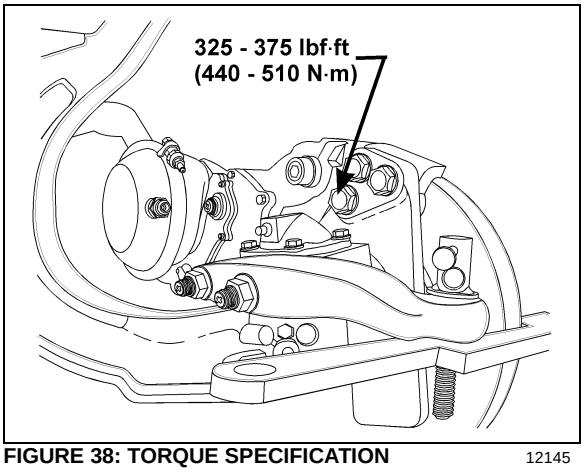

FIGURE 38: TORQUE SPECIFICATION 12145

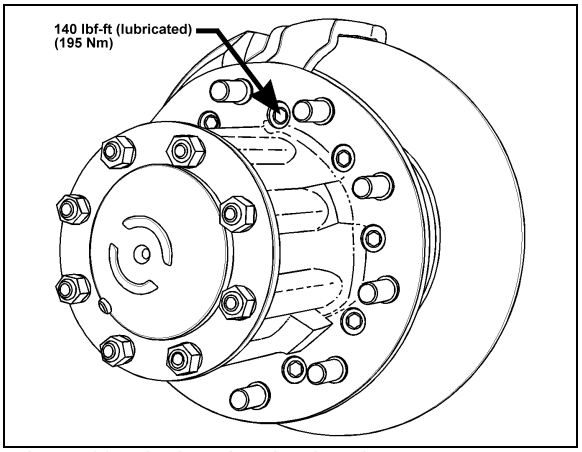

FIGURE 39: TORQUE SPECIFICATION 12149

28. SAFE SERVICE PROCEDURES

Most recently manufactured brake linings no longer contain asbestos fibers. Instead of asbestos, these linings contain a variety of ingredients, including glass fibers, mineral wool, aramid fibers, ceramic fibers, and carbon fibers. At present, OSHA (Occupational Safety and Health Administration) does not specifically regulate these non-asbestos fibers, except as nuisance dust. Medical experts do not agree about the potential long-term risks from working with and inhaling non-asbestos fibers. Nonetheless some experts think that long-term exposure to some non-asbestos fibers could cause diseases of the lung, including pneumoconiosis, fibrosis, and cancer. Therefore, lining suppliers recommend that workers use caution to avoid creating and breathing dust when working on brakes that contain non-asbestos fibers.

⚠ WARNING ⚠

Whenever possible, work on brakes in a separate area away from other operations.

Always wear a respirator approved by NIOSH (National Institute of Occupational Safety and Health) or MSHA (Mine Safety and Health Administration) during all brake service procedures. Wear the respirator from removal of the wheels through assembly.

NEVER use compressed air or dry brushing to clean brake parts or assemblies. OSHA recommends that you use cylinders that enclose the brake. These cylinders have vacuums with high efficiency (HEPA (Health and Environment Protection Agency)) filters and workmans' arm sleeves. But, if such equipment is not available, carefully clean parts and assemblies in the open air.

Clean brake parts and assemblies in the open air. During disassembly, carefully place all parts on the floor to avoid getting dust into the air. Use an industrial vacuum cleaner with a HEPA filter system to clean dust from the brake drums, backing plates and other brake parts. After using the vacuum, remove any remaining dust with a rag soaked in water and wrung until nearly dry.

If you must grind or machine brake linings, take additional precautions because contact with fiber dust is higher during these operations. In addition to wearing an approved respirator, do such work in an area with exhaust ventilation.

When cleaning the work area, NEVER use compressed air or dry sweeping to clean the work area. Use an industrial vacuum with a HEPA filter and rags soaked in water and wrung until nearly dry. Dispose of used rags with care to avoid getting dust into the air. Use an approved respirator when emptying vacuum cleaners and handling used rags.

Wash your hands before eating, drinking or smoking. Do not wear your work clothes home. Vacuum your work clothes after use and then launder them separately, without shaking, to prevent fiber dust from getting into the air.

Material safety data sheets on this product, as required by OSHA, are available from Rockwell and Knorr-Bremse.

29. AIR BRAKE TROUBLESHOOTING

The following tests and check lists have been designed to identify the cause(s) of a sluggish performance and/or leaks in the system. These tests require very little time to perform, and give you a general idea of the system condition. Each test is provided with a corresponding check list which will guide you to the most common causes of problems.

Before performing any test, check all air lines for kinks or dents, and hoses for signs of wear, drying out or overheating.

⚠ WARNING ⚠

When working on or around brake system and its related components, the following precautions should be observed:

Always block vehicle wheels. Stop engine when working under a vehicle. Keep hands away from chamber push rods and slack adjusters as they may apply when system pressure drops.

Never connect or disconnect a hose or line containing air pressure. It may whip as air escapes. Never remove a component or pipe plug unless you are sure all system pressure has been depleted.

Never exceed recommended air pressure and always wear safety glasses when working with air pressure. Never look into air jets or direct them at anyone.

Never attempt to disassemble a component until you have read and understood the recommended procedures. Some components contain powerful springs and injury can result if not properly disassembled. Use only proper tools and observe all precautions pertaining to the use of those tools.

Always clean connecting piping and/or fittings, and coat pipe threads with Teflon pipe sealant before installing any air brake system component.

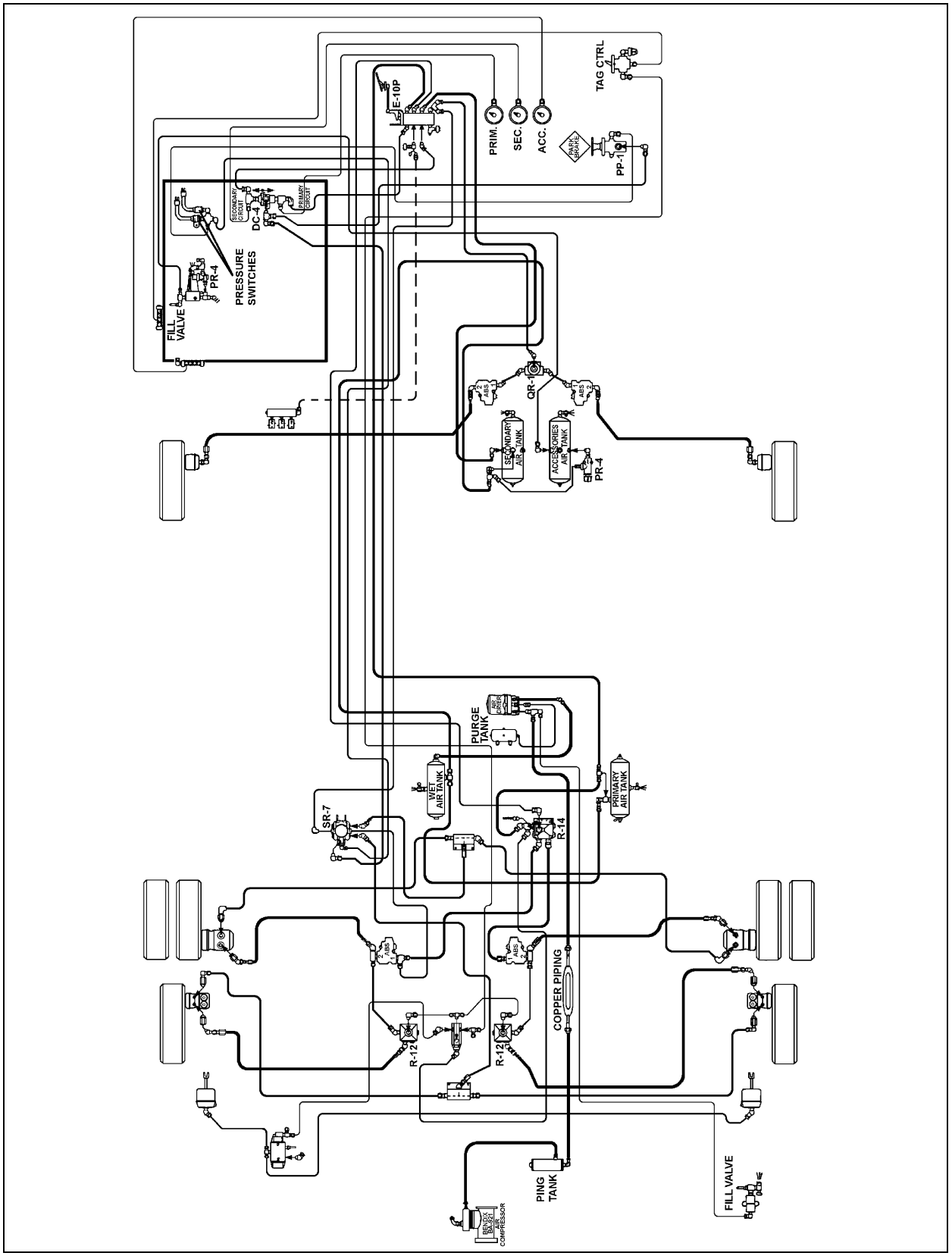

FIGURE 40: AIR-OPERATED BRAKING SYSTEM XL2

Pressure Build-Up / Low Pressure Warning / Cutoff Point / Air Filter/Dryer Built-in Governor Cutout

CONDITION: Vehicle leveled, parking brake applied.

1. Completely drain wet, primary and secondary air reservoirs only.
2. Start engine and run at fast idle. Low pressure warning lights should be *"On"*.
3. Start checking pressure at 50 psi (344 kPa).
4. Low pressure warning lights and buzzer should go off at or above 60 psi (415 kPa).
5. At 85 psi (586 kPa), run engine at full rpm, then check that build up time to 100 psi (690 kPa) is 30 seconds or less.
6. Air filter/dryer built-in governor cut-out. Cuts out at the correct pressure of 123 psi ±3 (847±21 kPa).
7. Air filter/dryer built-in governor cut-in. Cuts in around 110 psi (758 kPa).

For common corrections, refer to the following check list:

High or Low Warning Cutoff Point

- Perform a telltale light and gauge test. Replace entire cluster if found defective.

High or Low Air Filter/Dryer Built-in Governor Cutout Point

- Perform a telltale light and gauge test. Replace entire cluster if found defective.

OR

- Repair or replace air filter/dryer as necessary after checking that compressor unloader mechanism operates correctly.

More than 30 seconds to build-up pressure from 85 to 100 psi (585 - 690 kPa) at full engine RPM

- Perform a telltale light and gauge test. Replace entire cluster if found defective.
- Check compressor strainer or inlet line. If restricted, clean or replace element or faulty line.
- Check compressor head or discharge line for carbonization or restriction. Clean or replace as necessary.
- If discharge valves leak, pull head and correct or replace cylinder head.
- If drive is slipping, replace gear.
- If inlet valves are stuck, open or leaking severely, replace unloader kit, inlet valves and/or seats as necessary.
- If drain cock is found open, close it.
- Listen for air leaks and repair.
- Redo list to check all items repaired or replaced.

Air Supply Reservoir Leakage

CONDITION**:** Full pressure, engine stopped, parking brake applied

1. Allow at least 1 minute for pressure to stabilize.
2. Stop engine, then check air pressure gauge for 2 minutes. Note any pressure drop.
3. Pressure should not drop by more than 3 psi (20 kPa) per minute.

For common corrections, refer to the following check list:

Excessive air loss:

- With the primary air system at normal operating pressure (95 - 125 psi (655 - 860 kPa)), coat all air line connections and pneumatic components with a water and soap solution. Bubbles will indicate an air leak, and none should be permissible. Repair or replace defective parts.
- Listen for leaks and correct as required.
- Redo test to check all items repaired or replaced.

Brake System Air Leakage

CONDITION**:** Full pressure, engine stopped, parking brake released.

1. Apply service (foot) brakes, allow at least 1 minute for pressure to stabilize.
2. Hold down foot valve for 2 minutes while observing air pressure gauge on the dash-board.
3. Pressure drop should not be more than 4 psi (27 kPa) per minute.

For common corrections, refer to the following check list.

Excessive leakage on brake service side:

- With the primary air system at normal operating pressure (95 - 125 psi (655 - 860 kPa)) and foot brake applied, coat all air line connections and brake pneumatic components with a water and soap solution. Bubbles will indicate an air leak, and none should be permissible. Repair or replace defective parts.
- Listen for leaks and correct as required.
- Redo test to check all items repaired or replaced.

30. BRAKE AIR CHAMBER

If this vehicle is equipped with *Knorr-Bremse SB7000* disc brakes on all axles, it also uses "Knorr-Bremse" brake chambers. The tag and drive axle chambers consist of two separate air chambers, each having its own diaphragm and push rod. They are used as a service brake chamber, an emergency brake in case of air pressure loss and a spring-applied parking brake. Refer to figures 41 and 42.

The front axle brake air chambers are used only for service brake duty (Fig. 41).

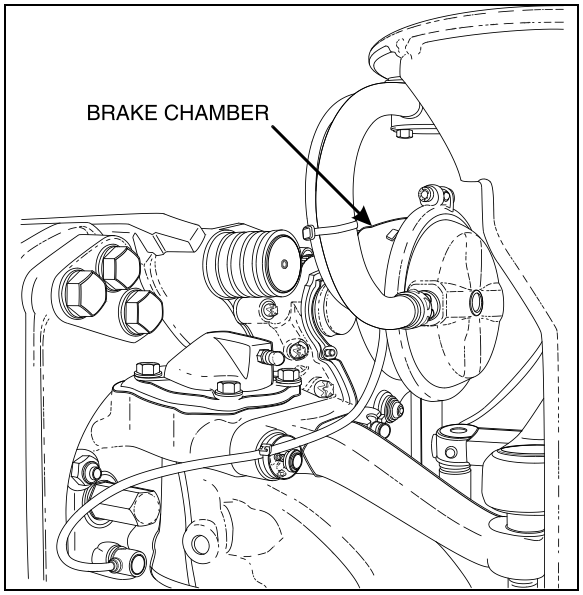

FIGURE 41: FRONT AXLE BRAKE AIR CHAMBER 12158

30.1 MAINTENANCE

Every 6,250 Miles (10 000 km) or twice a year, whichever comes first depending on type of operation:

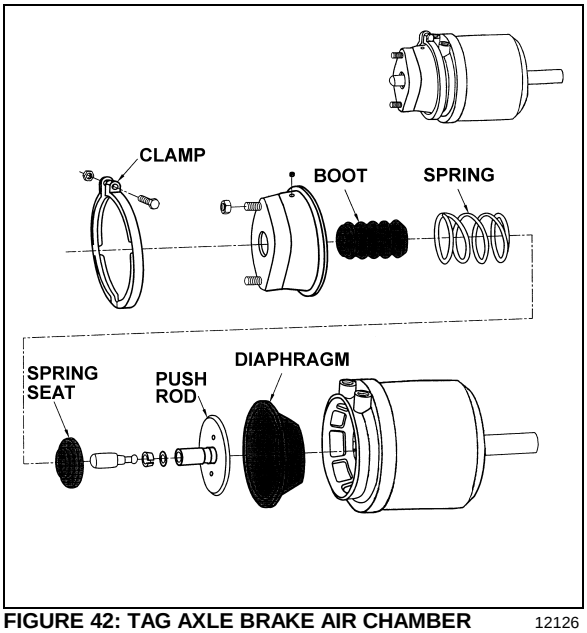

FIGURE 42: TAG AXLE BRAKE AIR CHAMBER 12126

Check all hoses and lines. They should be secure and in good condition.

Every 100,000 Miles (160 000 km) or once a year, whichever comes first depending on type of operation:

1. Disassemble and clean all parts.
2. Install new diaphragm or any other part if worn or deteriorated.

NOTE
When the diaphragm, spring, or both are replaced, they should be replaced in the corresponding chamber on the same axle.

3. Perform an airtighteness test:

a) Make and hold a full brake application.

b) Coat clamping ring(s) with a soapy solution. If leakage is detected, tighten clamping ring only enough to stop leakage. ***Do not overtighten*** as this can distort sealing surface or clamping ring. Coat area around push rod hole (loosen boot if necessary). No leakage is permitted. If leakage is detected, the diaphragm must be replaced.

30.2 EMERGENCY/PARKING BRAKE MANUAL RELEASE

⚠ WARNING ⚠
Never stand in the axis line of the spring brake chambers, especially when caging the spring.

Drive Axle

1. Block the wheels to prevent the vehicle from moving.
2. Remove the release stud tool from its storage place on drive axle brake air chamber.
3. Remove the access plug from the end of the spring chamber, then insert the release stud through the opening. Turn the release stud ¼ turn (clockwise) to anchor it into the spring plate. Install the flat washer and nut, then turn the nut clockwise to cage the spring. Repeat on the opposite side.

⚠ WARNING ⚠

Make sure the release stud is properly anchored in spring plate receptacle prior to caging the spring.

4. To manually reset the emergency/parking brake, turn the nut counterclockwise. Reinstall access plugs on the spring chambers, and release stud tools in their storage places.

Tag Axle

1. Block the wheels to prevent the vehicle from moving.
2. Turn the release bolt counterclockwise to cage the power spring (approx. 2.5 inches (6 cm)). Repeat on the opposite side.
3. To manually reset the emergency/parking brake, turn the bolt clockwise.

30.3 BRAKE CHAMBER REMOVAL

⚠ WARNING ⚠

To prevent personal injuries, brakes should be inoperative prior to working on any of their components.

To prevent personal injuries, brake chambers should be made inoperative by releasing spring tension prior to disposal.

1. Block the wheels to prevent the vehicle from moving.
2. Safely support vehicle at the recommended body jacking points.
3. To gain access to a given brake air chamber, the corresponding wheel can be removed (refer to Section 13: *"Wheels, Hubs and Tires"*).
4. Exhaust compressed air from system by opening the drain valve of each reservoir.
5. For the drive and tag axles brake chambers, manually release spring brakes (refer to "*Emergency/Parking Brake, Manual Release"* procedure in this section).
6. Disconnect air line(s) from brake chamber.
7. Remove the cotter pin connecting brake chamber and slack adjuster (drive axle).
8. Unbolt and remove the brake chamber from vehicle.

30.4 BRAKE CHAMBER INSTALLATION

Reverse removal procedure, then check brake adjustment.

⚠ CAUTION ⚠

Always clean air lines and fittings, and coat pipe threads with teflon pipe sealant before reconnecting air lines.

30.5 BRAKE CHAMBER DISASSEMBLY

⚠ WARNING ⚠

Spring brake chambers, on drive and tag axles contain an extremely high compressive force spring, which can possibly cause serious injury if special precautions are not taken when working around this area.

To avoid such injury, the following recommendations must be applied:

- **Prévost recommends the installation of a new spring brake chamber if it is found to be defective.**
- **Spring brake chamber maintenance and/or repair must be performed by trained and qualified personnel only.**
- **Before manually releasing spring brakes, visually check spring brake for cracks and/or corrosion.**
- **On "MGM" brake chambers (drive axle), make sure the release stud is properly anchored in spring plate receptacle prior to caging the spring.**
- **Never stand in the axis line of the spring brake chambers, especially when caging the spring.**

⚠ WARNING ⚠

To prevent personal injuries, brakes should be inoperative prior to working on any of their components.

1. Block the wheels to prevent the vehicle from moving.
2. Safely support vehicle at the recommended body jacking points.

NOTE

To gain access to a given brake air chamber, the corresponding wheel can be removed (refer to Section 13: "Wheels, Hubs and Tires").

3. Exhaust compressed air from air system by opening the drain valve of each reservoir.
4. For the drive and tag axles brake chambers, manually release spring brakes (refer to "*Emergency/Parking Brake Manual Release"* procedure in this section).
5. Remove clamp ring, remove and discard the existing diaphragm. Install the new diaphragm squarely on body.
6. Reverse the procedure for assembly. Tap clamp ring to ensure proper seating. Check for proper operation before placing vehicle in service.

31. ANTI-LOCK BRAKING SYSTEM (ABS)

This device has been designed to ensure stability and permit steering control of vehicle during hard braking, and to minimize its stopping distance whatever the road conditions are. On slippery roads and generally in emergency situations, over-braking frequently induces wheel lock. The anti-lock braking system provides maximum braking performance while maintaining adequate steering control on slippery roads.

The ABS continuously monitors wheel behavior during braking. Sensors on each wheel of front and drive axles (tag axle is slave to drive axle) transmit data to a four channel electronic processor which senses when any wheel is about to lock. Modulator valves quickly adjust the brake pressure (up to 5 times per second) to prevent wheel locking. Each wheel is therefore controlled according to the grip available between its tire and the road.

With this device, the vehicle is brought to a halt in the shortest possible time, while remaining stable and under the driver's control.

Since the braking system has dual circuits, the ABS is also provided with a secondary system should a fault develop in the ABS. Anti-lock systems are a parallel system which does not hinder brake functioning in case of failure. Braking system functions in normal, non anti-lock controlled operation during ABS system failure.

The ABS system consists of two diagonally related circuits, only the half of the system which has sustained damage or other fault is switched off (i.e. wheels return to normal non-ABS braking). The other diagonal half remains under full ABS control.

NOTE

ABS is active on service brake, transmission retarder, Jake brake, but is inactive on emergency/parking brake.

NOTE

The ABS system is inoperative at speeds under 4 mph (6 Km/h). Illumination of ABS telltale indicator at these speeds is normal.

⚠ CAUTION ⚠

Disconnect the ECU or pull the ABS fuse before towing vehicle.

31.1 TROUBLESHOOTING AND TESTING

For troubleshooting and testing of the vehicle's anti-lock braking system, refer to Meritor Wabco Maintenance Manual MM-0112: *"Anti-Lock Braking System (ABS) for Trucks, Tractors and Buses"*, at the end of this section. Use dashboard Message Center Display (MCD) Diagnostic Mode for troubleshooting and repair.

31.2 ABS COMPONENTS

The main components of the ABS system are listed hereafter. Refer to each component for its specific function in the system and for proper maintenance.

31.2.1 Electronic Control Unit (ECU)

This control unit is located in the front service compartment, (refer to figure 43 for location). According to the data transmitted by the sensors (number of pulses/sec is proportional to the speed of each wheel), the electronic control unit determines which wheel is accelerating or decelerating. It then establishes a reference speed (average speed) from each wheel data, and compares the speed of each wheel with this reference speed to determine which wheel is accelerating or decelerating.

As soon as wheel deceleration or wheel slip threshold values are exceeded, the electronic control unit signals a solenoid control valve to limit the excessive brake pressure produced by the driver in the appropriate brake chamber.

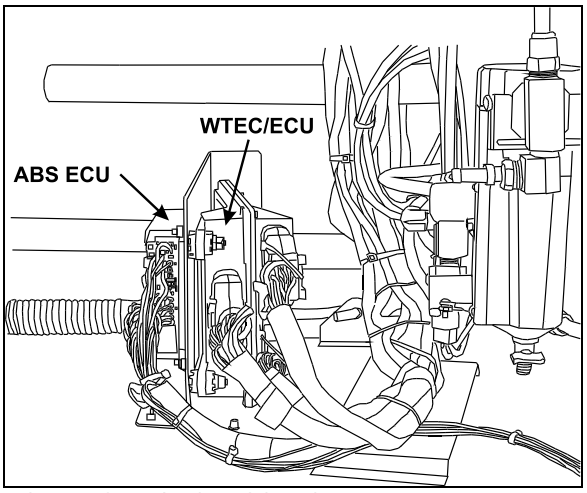

FIGURE 43: ABS ECU LOCATION 12147

Maintenance

No specific maintenance is required. The ECU is not serviceable. When found to be defective, replace.

⚠ CAUTION ⚠

In order to protect the ABS electronic control unit from voltage surges, always disconnect before performing any welding procedure on vehicle.

31.2.2 ABS Modulator Valve

This ABS system is equipped with four modulator valves, located between the brake chamber and the relay valve or quick release valve (Fig. 44). Note that there is only one solenoid valve controlling the drive and tag axle wheels on the same side (tag axle is slave to drive axle).

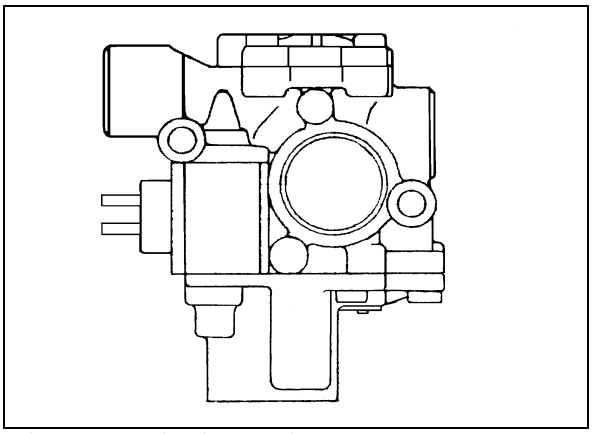

FIGURE 44: ABS MODULATOR VALVE 12084

This is an *"On/Off"* type valve, i.e., at brake application, the valve exhausts air from the brake chamber when the electronic unit senses that the corresponding wheel speed is decreasing in relation to the other wheels.

Maintenance

No specific maintenance is required for the solenoid control valve.

31.2.3 Sensors

The sensors are mounted on the front and drive axle wheel hubs (Fig. 45). The inductive sensors consist essentially of a permanent magnet with a round pole pin and a coil. The rotation of the toothed wheel alters the magnetic flux picked up by the coil, producing an alternating voltage, the frequency of which is proportional to wheel speed. When wheel speed decreases, magnetic flux decreases proportionately. Consequently, the electronic control unit will command the solenoid control valve to decrease the pressure at the corresponding brake chamber.

Maintenance

No specific maintenance is required for sensors, except if the sensors have to be removed for axle servicing. In such a case, sensors should be lubricated with special grease (Prévost #680460) before reinstallation. Refer to paragraph *"Sensor Installation"* for details.

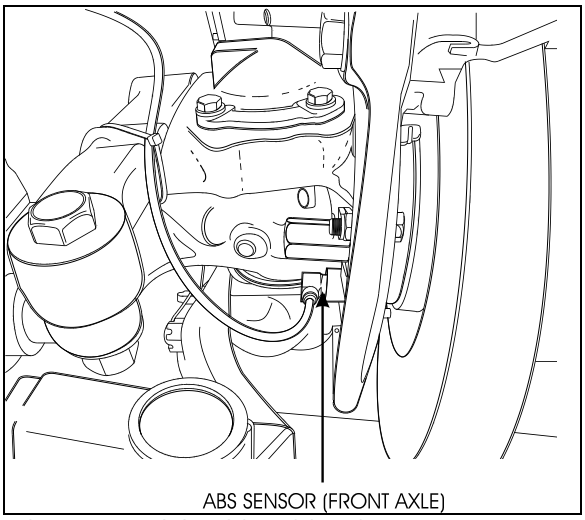

FIGURE 45: ABS SENSOR LOCATION 12153

NOTE
The resistance value, when sensors are checked as a unit, must be equal to 1,75 k ohms. To check the sensors for proper output voltage after the sensors and toothed wheels have been assembled to the axle, connect a suitable AC voltmeter across the output terminals. With the hubs rotating at 30 rpm, the output voltages should read from 50 to 1999 mV to be acceptable.

31.2.4 Sensor Installation

The following procedure deals with sensor installation on the axle wheel hubs. Read procedure carefully before reinstalling a sensor, as its installation must comply with operational tolerances and specifications.

1. Apply recommended lubricant (Prévost #680460) to spring clip and sensor.

⚠ CAUTION ⚠
Use only this type of grease on the sensors.

2. Insert spring clip in the holder on hub. Make sure the spring clip tabs are on the inboard side of the vehicle. Push in until the clip stops.
3. Push the sensor completely inside the spring clip until it is in contact with the tooth wheel. Ensure mounting is rigid, as it is an important criterion for adequate sensor operation.

NOTE
This installation should be of the "press fit" type.

31.2.5 Spring clip

The spring clip retains the sensor in its mounting bracket close to the toothed pulse wheel. The gap between the sensor end and teeth is set automatically by pushing the sensor in the clip hard up against the tooth wheel, and the latter knocks back the sensor to its adjusted position (Fig. 46).

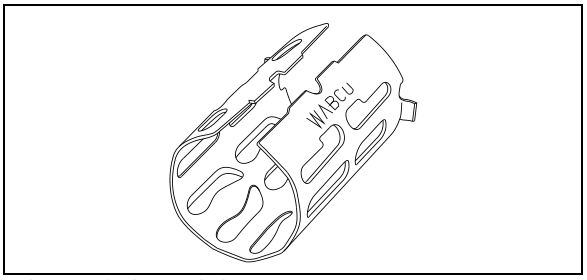

FIGURE 46: SPRING CLIP 12161

Maintenance

The spring clip requires no specific maintenance.

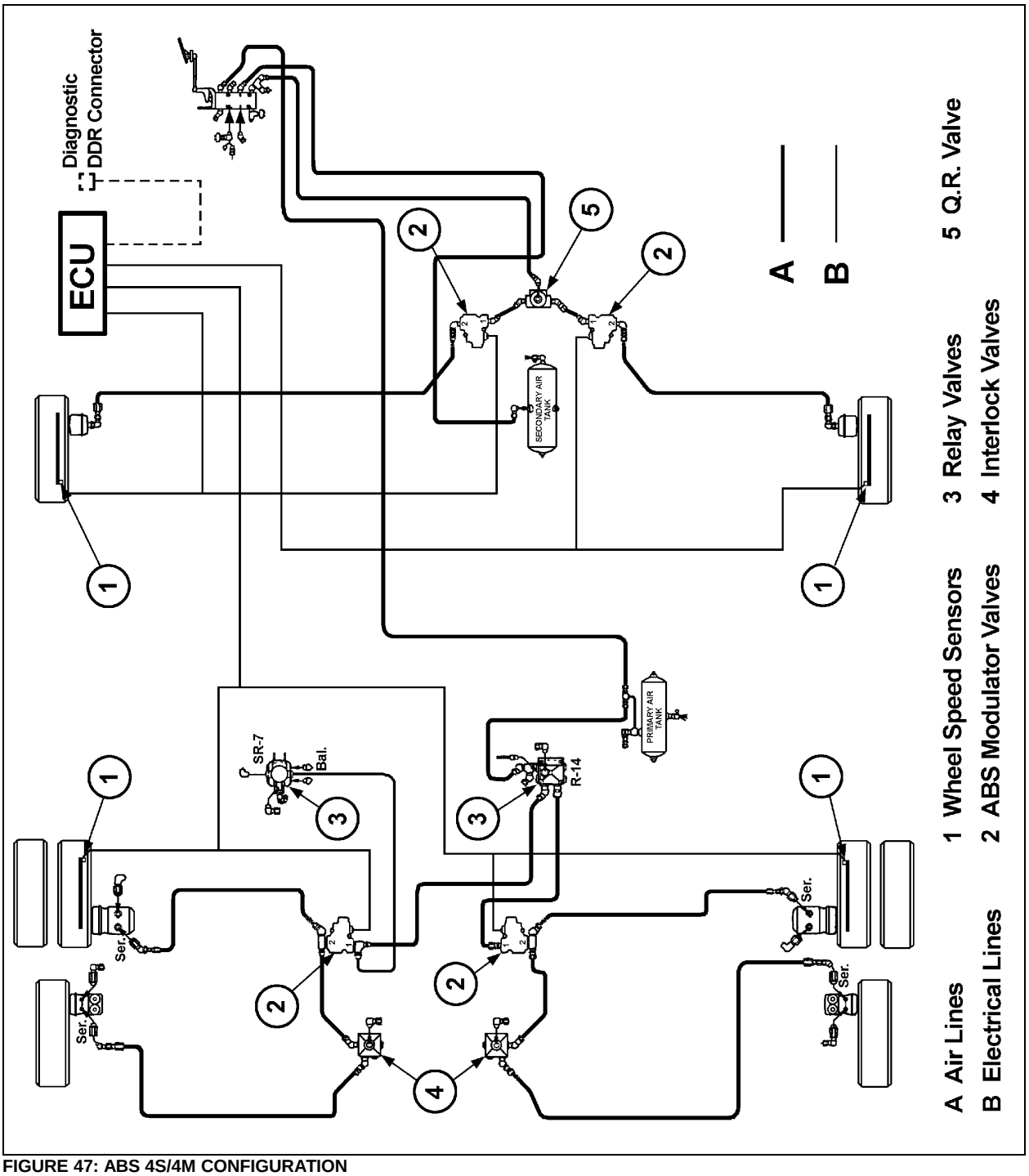

FIGURE 47: ABS 4S/4M CONFIGURATION

32. FITTING TIGHTENING TORQUES

45° Flare and Inverted Flare: Tighten assembly with a wrench until a solid feeling is encountered. From that point, tighten 1/6 turn (Fig. 48).

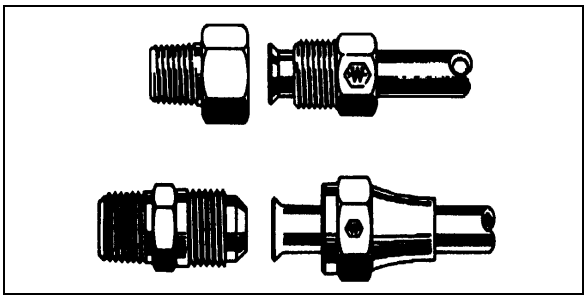

FIGURE 48: HOSE FITTINGS 12053

Compression: Tighten nut by hand (Fig. 49). From that point, tighten using a wrench the number of turns indicated in the chart hereafter.

Fitting size	Pipe diameter (inches)	Number of additional turns required following hand tightening
2	1/8	1 ¼
3	3/16	1 ¼
4	1/4	1 ¼
5	5/16	1 ¾
6	3/8	2 ¼
8	1/2	2 ¼
10	5/8	2 ¼
12	3/4	2 ¼
16	1	2 ¼

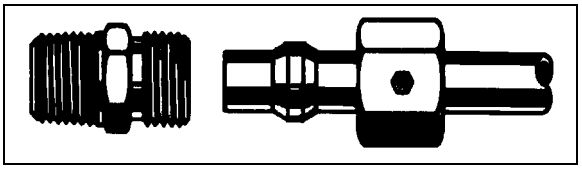

FIGURE 49: HOSE FITTING 12054

NTA-Type Plastic Tubing: Hand tighten nut (Fig. 50). From that point, tighten using a wrench the number of turns indicated in the following chart.

Tubing diameter (inches)	Number of additional turns required following hand tightening
1/4	3
3/8 to 1/2	4
5/8 to 3/4	3 ½

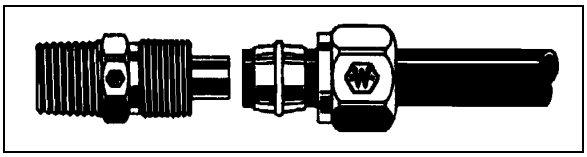

FIGURE 50: HOSE FITTING 12055

AB-Type Copper Piping: Hand tighten nut (Fig. 51). From that point, tighten with a wrench the number of turns indicated in the following chart.

Piping diameter (inches)	Number of additional turns required following hand tightening
1/4, 3/8, 1/2	2
5/8, 3/4	3

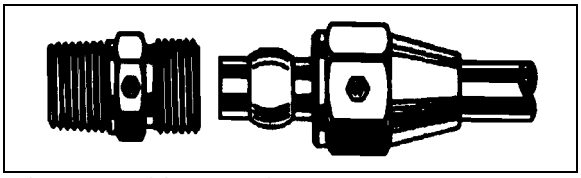

FIGURE 51: HOSE FITTING 12056

Pipe Tightening: All connections must be hand tightened. From that point, tighten a minimum of 2 ½ additional turns.

NOTE
Use Locktite (Prévost number 680098) pipe sealant to seal pipe thread.

33. SPECIFICATIONS

Air Compressor

Make..... Bendix Westinghouse
Model..... BA-921
Capacity (at 1250 rpm).....15.7 cfm (0,445 m^3/min.)
Supplier number..... 801287
Prévost number..... 641990

BA-921 Service Kits

ST-4 Safety Valve
Supplier number..... 800534
Prévost number..... 641989

Series 60 Seal Kit
Supplier number..... 5012371
Prévost number..... 641988

Compressor Seal Kit
Supplier number..... 5008559
Prévost number..... 641987

Cylinder Head Gasket Kit
Supplier number..... 5008558
Prévost number..... 641986

Air Dryer

Make..... Haldex
Model..... AT-87192
Supplier number..... 108229
Prévost number..... 70303498
Desiccant cartridge Prévost number..... 3097369

Flip-Flop Control Valve

Make..... Bendix Westinghouse
Model..... TW-1
Type ..... On-Off
Supplier number..... 229635
Prévost number..... 640136

Emergency/Parking Brake Control Valve

Make..... Bendix Westinghouse
Model..... PP-1
Automatic release pressure ..... 40 psi (275 kPa) nominal
Supplier number..... 287325
Prévost number..... 641128

Emergency/Parking Brake Overrule Control Valve

Make..... Bendix Westinghouse
Model.....RD-3
Supplier number..... 281481
Prévost number..... 640472

Dual Brake Application Valve

Make..... Bendix Westinghouse
Model..... E-10P
Supplier number..... 5006280
Prévost number..... 641856

Stoplight Switches

Make..... Bendix Westinghouse
Model.....SL-5
Contact close (ascending pressure).....4 psi and more (28 kPa)
Supplier number..... 286404
Prévost number..... 641462

Brake Relay Valves

Make..... Bendix Westinghouse
Model..... R-12
Supplier number.....
Prévost number.....

Brake Relay Valve

Make.....Meritor Wabco
Model..... R-14
Supplier number.....
Prévost number.....

Quick Release Valve

Make..... Bendix Westinghouse
Model.....QR-1
Supplier number..... 5001496
Prévost number..... 641429

Spring Brake Valve

Make..... Bendix Westinghouse
Model..... SR-7
Supplier number.....
Prévost number.....

Pressure Protection Valve

Make..... Bendix Westinghouse
Model.....PR-4
Nominal closing pressure.....70 psi (482 kPa)
Supplier number..... 277226
Prévost number..... 641137

Shuttle-Type Double Check Valve

Make..... Bendix Westinghouse
Model.....DC-4
Supplier number..... 277988
Prévost number..... 641015

Low Pressure Indicators

Make..... Bendix Westinghouse
Model.....LP-3
Contact close.....66 psi (455 kPa)
Supplier number..... 277227
Prévost number..... 640975

Air Pressure Regulator

Make..... Norgren
Adjustable output range ..... 0-80/85 psi (0-552/586 kPa)
Recommended pressure setting .....75 psi (517 kPa)
Supplier number.....R06-2G7 RNKA
Prévost number..... 641472

Air Filter Element

Make..... Norgren
Type .....With manual drain
Supplier number.....F74G-345-004
Prévost number..... 641338

Front Axle Brake Chambers

Make.....Knorr-Bremse
Type 24
Supplier number (R.H.) ..... BS-3457 II 34671
Prévost number (R.H.) 641414
Supplier number (L.H.)..... BS-3457 II 34670
Prévost number (L.H.)..... 641413

Drive Axle Brake Chambers

Make.....Knorr-Bremse
Type ..... 24 as service -24 as emergency
Supplier number II/35699/BS-9524
Prévost number..... 641432

Piggy Back (On Drive Brakes)

Make.....Knorr-Bremse
Type .....24 as emergency
Supplier number II/17567/0061
Prévost number..... 641433

Tag Axle Brake Chambers

Make.....Knorr-Bremse
Type ..... 16 as service – 16 as emergency
Supplier number.....II/18224/V1-BS9396
Prévost number..... 641308

Piggy Back (On Tag Brakes)

Make.....Knorr-Bremse
Type .....16 as emergency
Supplier number..... II/18224/0061
Prévost number..... 641431

Brake Lining (All Axles)

Make.....Knorr-Bremse
Supplier number..... II 33976
Prévost number..... 611049
Prévost number..... 641226

ABS ANTILOCK BRAKING SYSTEM (if applicable)

ABS MODULATOR VALVE

Make..... Rockwell Wabco
Voltage .....24 V
Supplier number..... 472 195 006 0
Prévost number..... 641097

Sensor, Front Axle

Supplier number.....441 032-572-0
Prévost number..... 641288

Sensor, Drive Axle (In Wheel End)

Supplier number.....441 032-576-0
Prévost number..... 641095

SECTION 13: WHEELS, HUBS & TIRES

CONTENTS

1. WHEELS 13-3

2. WHEEL MAINTENANCE 13-3

2.1 INSPECTION 13-3
2.2 SINGLE WHEEL REMOVAL 13-4
2.3 SINGLE WHEEL INSTALLATION 13-4

3. DUAL WHEELS 13-4

3.1 OUTER WHEEL REMOVAL 13-4
3.2 INNER WHEEL 13-4
3.3 INNER WHEEL INSTALLATION 13-4
3.4 OUTER WHEEL INSTALLATION 13-4
3.5 INSPECTION 13-4

4. ALUMINUM WHEEL ANTI-CORROSION PROTECTION 13-5

5. WHEEL STRAIGHTNESS TEST 13-5

6. WHEEL STUDS 13-6

6.1 DRIVE AXLE STUDS 13-6
6.2 FRONT AND TAG AXLE STUDS 13-6

7. HUB MOUNTED WHEELS 13-6

7.1 CARE OF WHEELS 13-7

8. FRONT AND TAG AXLE WHEEL HUBS 13-7

8.1 HUB BEARING INSPECTION 13-7

9. DRIVE AXLE WHEEL HUBS 13-8

9.1 BEARING ADJUSTMENT 13-8
9.2 DISASSEMBLY AND REPAIR 13-8

10. SPARE WHEEL (IF APPLICABLE) 13-9

10.1 PULLING OUT SPARE WHEEL 13-9
10.2 CHANGING A FLAT 13-10
10.3 SPARE WHEEL MAINTENANCE 13-10

11. TIRE MAINTENANCE 13-10

11.1 INFLATION PRESSURE 13-11
11.2 TIRE MATCHING 13-12
11.3 WHEEL BALANCING 13-12
11.4 TIRE ROTATION 13-12

12. SPECIFICATIONS 13-13

ILLUSTRATIONS

FIGURE 1: ALUM/STEEL WHEEL ARRANGEMENT 13-3
FIGURE 2: TIGHTENING SEQUENCE 13-3
FIGURE 3: DIAL GAUGE INSTALLATION 13-6
FIGURE 4: STUD-MOUNTED WHEELS 13-6
FIGURE 5: HUB-MOUNTED WHEELS 13-7
FIGURE 6: SPARE WHEEL COMPARTMENT 13-9
FIGURE 7: SPARE WHEEL AND TIRE 13-9
FIGURE 8: FORWARD R. H. SIDE COMPARTMENT 13-9
FIGURE 9: REAR BAGGAGE COMP. L.H. SIDE 13-10
FIGURE 10: TIRE INFLATION 13-11
FIGURE 11: TIRE LIFE / INFLATION PRESSURE 13-12

1. WHEELS

When the vehicle is provided with stud-mounted wheels, wheel studs and nuts on the left side of the vehicle have left-hand threads whereas those on the right side have right-hand threads. If equipped with hub-mounted wheels, all studs and nuts have right-hand threads. Either steel wheels or optional aluminum-polished wheels may be installed on the vehicle. Both are mounted with radial tubeless tires.

All wheel dimensions are 22.50 X 9.0 inches (571.5 X 228.6 mm) for 315/80 R 22.5 tires except for coaches inner drive wheels ,which are always steel wheels and 22.50 X 8.25 inches (571.5 X 209.6 mm) for 315/80 R 22.5 tires. All other wheels can either be steel or aluminum wheels.

NOTE
MTH vehicles come equipped with 22.50 X 10.5 wheel dimensions (571.5 X 266.7 mm) for 365/70 R 22.5 tires on front and tag axle.

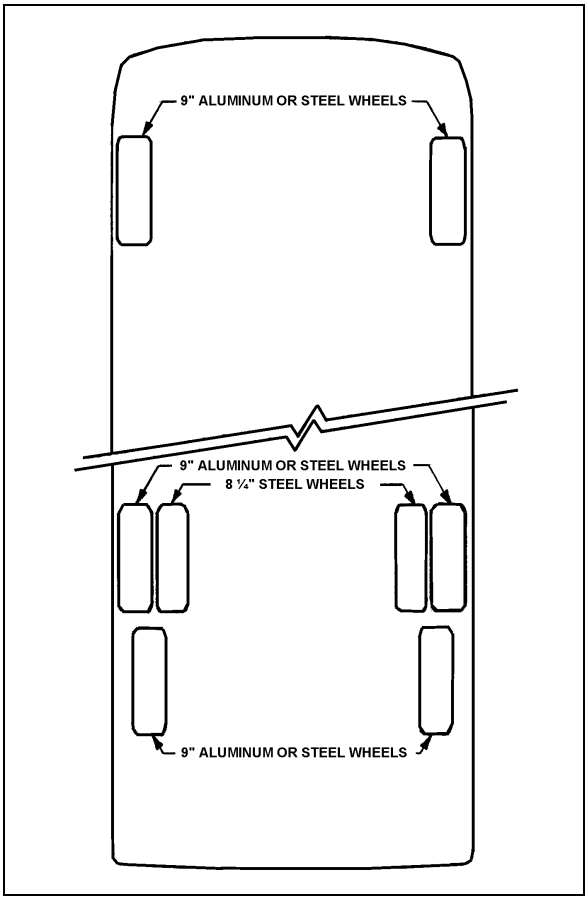

FIGURE 1: ALUM/STEEL WHEEL ARRANGEMENT 13001

2. WHEEL MAINTENANCE

Wheel maintenance consists of periodic inspections. Check all parts for damage and make sure that wheel nuts are tightened to the proper torque. In the case of a new vehicle, or after a wheel installation, stud nuts should be tightened every 100 miles (160-km) for the first 500 miles (800-km) to allow setting in of clamping surfaces.

Wheel studs and nuts must be kept free from grease and oil. No lubricant whatsoever should be used. Cleanliness of the wheel and its rotor mating surfaces is important for proper wheel mounting.

However, for hub mounted wheels, it is recommended to add some rust protection lubricant on the pilot diameter of the hub (to facilitate future removal).

It is also important that wheel stud nuts be tightened alternately on opposite sides of the wheel. Refer to Figure 2 for the suggested tightening sequence.

2.1 INSPECTION

Tighten stud nuts progressively as shown in Figure 2. The final tightening should be done with a torque wrench. Tighten stud nuts to 450 - 500 lbf-ft (610 - 680 Nm) for aluminum as well as steel wheels.

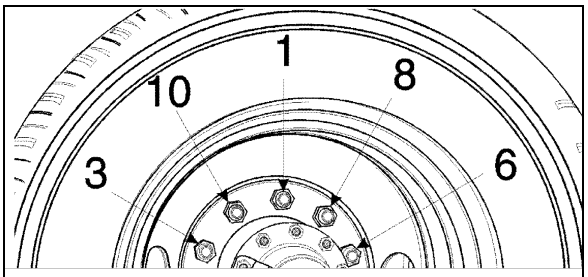

FIGURE 2: TIGHTENING SEQUENCE 13018

2.2 SINGLE WHEEL REMOVAL

1. Stop engine and apply parking brake.
2. Loosen wheel nuts about one turn (do not remove the nuts). This is not necessary if equipped with hydraulic powered gun.

NOTE
For stud-mounted wheels, turn nuts counterclockwise for R.H. side and clockwise for the L.H. side of vehicle. For hub-mounted wheels, turn nuts counterclockwise on both sides of the vehicle.

3. Raise the vehicle by its jacking points on the body. See Section 18, *"Body",* under heading *"Vehicle Jacking Points";*
4. Unscrew wheel hex stud nuts and remove the wheel;

⚠ CAUTION ⚠
Always mark position of the wheel on the axle prior to removal in order to replace wheel at the same location, thus avoiding a new wheel balancing.

2.3 SINGLE WHEEL INSTALLATION

1. Mount the wheel over studs, being careful not to damage stud threads;
2. Screw in the hex stud nuts (refer to Figure 2 for sequence) so that wheel will position itself concentrically with hub. This is important, otherwise wheel may be eccentric with hub and will not run straight. In this initial step, slightly tighten the nuts to correctly position the wheel;
3. Tighten stud nuts progressively as shown in Figure 2. The final tightening should be done with a torque wrench. Tighten stud nuts to 450 - 500 lbf-ft (610 - 680 Nm) for aluminum as well as steel wheel.

⚠ CAUTION ⚠
Insufficient mounting-torque can result in damage to parts. Excessive mounting torque can cause studs to break and the wheel to crack in stud hole area.

3. DUAL WHEELS

3.1 OUTER WHEEL REMOVAL

Same as described in *"Single Wheel Removal"* procedure described previously.

3.2 INNER WHEEL

1. Remove outer wheel;
2. Unscrew inner cap nuts
3. Remove inner wheel.

3.3 INNER WHEEL INSTALLATION

1. Mount the wheel over studs, being careful not to damage stud threads;
2. Screw in the inner cap nuts (Fig. 3), so that wheel will position itself concentrically with hub. Refer to Figure 2 for sequence;
3. Tighten inner cap nuts progressively according to sequence shown in Figure 2. Final tightening should be done with a torque wrench. Tighten inner cap nuts to 450 - 500 lbf-ft (610 - 680 Nm) for aluminum as well as steel wheel.

⚠ CAUTION ⚠
Insufficient mounting-torque can result in damage to parts. Excessive mounting torque can cause studs to break and the wheel to crack in stud hole area.

3.4 OUTER WHEEL INSTALLATION

With inner wheel installed, tighten the hex stud nuts (Fig. 4) using the single wheel installation procedure described previously.

Note: *On dual wheel assemblies, position the wheels with the tire valves 180º apart in order to have access to both the inner and outer valves.*

3.5 INSPECTION

1. Loosen a hex stud nut three turns (Fig. 4);
2. Tighten the inner cap nut to 450 - 500 lbf-ft (610 - 680 Nm);
3. Tighten the hex stud nut to 450 - 500 lbf-ft (610 - 680 Nm).

Repeat for each of the 10 *"hex stud nut - inner cap nut assemblies"* according to the tightening sequence in Figure 2.

⚠ CAUTION ⚠

Do not attempt to tighten an inner cap nut without having previously loosened the hex stud nut.

⚠ CAUTION ⚠

The actual length of thread engagement present in an assembled wheel can not always be determined by visual inspection of measurement of a tightened assembly. The relationship of the wheel cap nut seat to the end of the stud may vary. If there is any doubt that enough thread engagement is present, the number of engaged threads may be counted. Tighten all nuts in the regular manner, then loosen one to hand-tightness. The number of turns to disengage a 1-1/8-inch nut should be at least five full turns. At least seven full turns should be required to disengage a ¾-inch nut or a M22 nut. Ideally, when torqued to the proper load, the stud should be flush with the face of the nut. The face of the nut may be recessed in nuts that are taller for improved wrenching. With most of the nuts in present use, a few unengaged threads at the outer end will cause no problem provided at least 5-7 full turns are required to disengage the nut depending on thread size.

4. ALUMINUM WHEEL ANTI-CORROSION PROTECTION

Clean wheels often by means of a high pressure water jet. Cleaning may be accelerated with mild soap. Do not use concentrated alkaline cleaning products.

When tire is removed, clean and inspect wheel thoroughly. Remove dirt and corrosion on rim by means of a wire brush. Do not use a wire brush on the outer surface of the wheel.

The following measures should be taken to maintain original appearance of the aluminum wheels:

1. Remove any tar from wheel surface with a good quality tar remover.
2. Spray Alcoa Cleaner (Prévost #683529) evenly on cool outer surface of wheel. Let work 15-20 minutes (keep wet by spraying more Cleaner if necessary).
3. Rinse thoroughly with clean water and let air dry. Heavy oxidation may require a repeat application of cleaner.
4. Apply Alcoa Polish (Prévost #683528) sparingly to a small area using a clean, soft cloth. Work polish into surface as you would a rubbing compound.
5. Buff, turning cloth frequently, until surface is clean and shiny. Let air dry. Use power buffer to improve ease of use and gloss uniformity.
6. On completely dry, clean and polished surface, generously apply Alcoa sealant (Prévost #683527). Rinse thoroughly with water while surface is still wet in appearance (have water source ready as the dry time is very short, usually less than 2 minutes).
7. For best results, finish by wiping the surface with a clean rag to remove excess water, then allow surface to dry.

Clean aluminum wheels as required to maintain original look.

⚠ WARNING ⚠

Wheel surfaces may have sharp or cutting edges that may cause injury to the hands. To prevent contact with sharp edges, it is strongly recommended to wear rubber gloves when washing or polishing wheels.

5. WHEEL STRAIGHTNESS TEST

1. Slightly raise axle to be checked and place a safety support underneath;
2. Check wheel lateral runout. Install a dial gauge as shown in Figure 3, then rotate the wheel by hand one full turn. As the wheel turns, note any variation on the dial gauge;

⚠ CAUTION ⚠

Damage to the dial gauge could occur if it strikes a wheel balancing weight.

3. If the variation in lateral runout exceeds 0.0625 inch (1,6 mm), the wheel must be replaced.

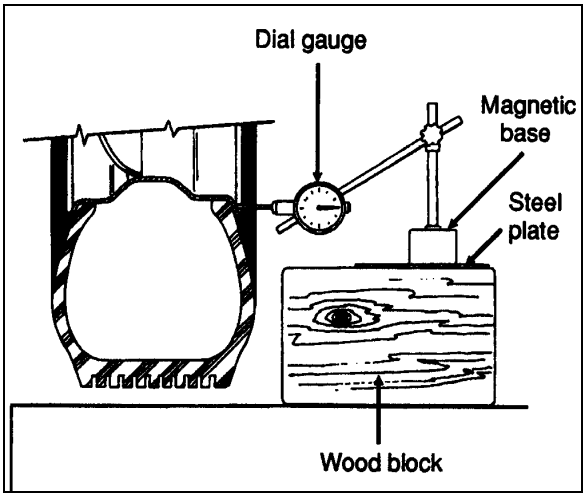

FIGURE 3: DIAL GAUGE INSTALLATION 13008

If doubt exists whether wheel or hub is distorted, hub may be checked as follows:

- Replace the existing wheel with a wheel known to be correct;
- Check wheel lateral runout as outlined in step 2;
- If, within specifications, the hub is correct but the suspected wheel must be replaced.

⚠ WARNING ⚠

NEVER STRAIGHTEN ALUMINUM WHEELS. Never heat aluminum wheels to repair damages incurred after hitting a curb or resulting from other causes. The special alloy in wheels has been heat treated, and any uncontrolled heating could alter wheel structure. Furthermore, never weld aluminum-forged wheels for any reason whatsoever.

6. WHEEL STUDS

Stripped threads may be the result of excessive torquing or may have been damaged during wheel installation when placing the wheel over the studs. A stud having damaged threads must be replaced. Broken studs are a direct result of operating with loose stud nuts or improperly seated wheels. When a broken stud is replaced, the adjacent studs, on each side of the broken one must also be replaced since they could have been subjected to excessive strain and may be fatigued.

When installing wheel studs to hubs, check nuts retaining the wheel stud to wheel hub and replace if they are deformed, damaged or severely corroded. Install nut (and washer where applicable) to new stud. Torque to 450 - 500 Ft-lbs (610 - 680 Nm).

NOTE

For stud-mounted wheels, turn nuts counterclockwise for R.H. side and clockwise for the L.H. side of vehicle. For hub-mounted wheels, turn nuts counterclockwise on both sides of the vehicle.

6.1 DRIVE AXLE STUDS

Stud-mounted wheels are mounted on the drive axle with ¾"-16 studs with an inner cap nut, and a 1-1/8”-16 nut. Hub-mounted wheels are mounted with M22 x 1.5 studs and an M22 flange nut.

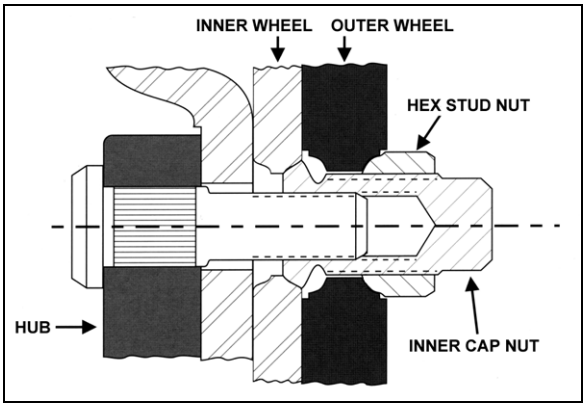

FIGURE 4: STUD-MOUNTED WHEELS 13007

6.2 FRONT AND TAG AXLE STUDS

Wheel can be mounted on tag axle with studs (1-1/8"-16 thread) or hub mounted (M22 x 1.5 thread).

NOTE

Wheel studs and nuts must be kept free from grease and oil. No lubricant whatsoever should be used.

7. HUB MOUNTED WHEELS

Wheel surfaces in contact with hubs, nuts or other wheels should be kept free of all rust, grease and paint (except for initial “E” coat protection, applied to stop rusting and to facilitate wheel removal). The reason for this is to assure

that all faces are clamped together without buildup of any coating. The threads of the wheel studs and the wheel nuts should be clean and undamaged.

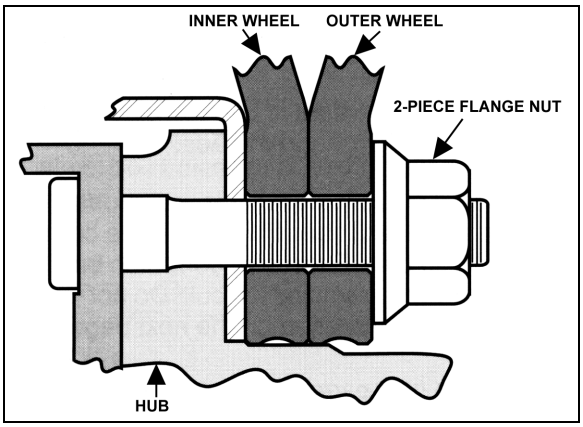

FIGURE 5: HUB-MOUNTED WHEELS 13025

NOTE
When painting wheels, make sure to mask all surfaces identified above.

Using a calibrated torque wrench, tighten wheel nuts to 450 - 500 lbf-ft (610 - 680 Nm) of torque. Do not use power tools or long bars for tightening. Tighten wheel nuts alternately as shown in figure 2.

NOTE
Tightening should not be done immediately after prolonged braking or when wheel ends are hot

Check wheel nut torque at every 100 miles (160 km) for 500 miles (800 km) after fitting wheels. Let cool before checking. If any relaxation of the initial 450 - 500 lbf-ft (610 - 680 Nm) of torque has occurred, retighten. Relaxation of initial torque may occur because of the “bedding down” of the hub and wheel surfaces.

NOTE
Torque relaxation occurs when wheel ends are hot but should revert to original setting when cool. Retightening when hot will produce a higher torque reading than recommended.

7.1 CARE OF WHEELS

Check for cracks in wheels, especially around the fixing holes, studs, nuts and washers. If in doubt, renew.

Do not simply retighten very loose wheel fixings or wheels that are continually becoming loose. Find out why they are loose and whether any damage has been caused.

Use trained personnel and keep records of all attention to wheels and fixings, including which parts were renewed and when.

8. FRONT AND TAG AXLE WHEEL HUBS

The unitized hub bearings used on the NDS range of axles, are non-serviceable items. Bearings are pre-adjusted, lubricated and have seals fitted as part of the manufacturing process. The bearings are greased for life and there is no need or facility for re-lubrication

8.1 HUB BEARING INSPECTION

An inspection should be made at intervals of 30,000 miles (48 000 km).

- Apply parking brake, raise wheels off the ground and support axle on stands. When the wheels are raised, they should revolve quite freely without roughness.
- Place magnetic base of a dial indicator on brake caliper and position dial indicator stem against a convenient marked spot on face of hub flange.
- With dial indicator in position pull hard but steadily on hub flange and oscillate at same time until a steady reading is achieved.
- Without releasing the pressure, turn bearing so that dial indicator stem contacts marked spot and note reading on indicator.
- Push bearing flange hard and oscillate as before until a steady reading is achieved.
- Without releasing the pressure, turn bearing so that indicator stem again contacts the marked spot and note new reading on indicator.
- The difference between readings is the amount of mounted end play in bearing unit.
- The mounted end play figure should not exceed 0.050 mm for a new bearing.

NOTE
If original bearing unit is re-fitted, and end-float is measured at 1 mm, with hub not fully tightened to correct torque, then the retaining clip within the unit is damaged and a new unit must be fitted.

NOTE
For more information on front and tag axle wheel hub, refer to "DANA SPICER Maintenance Manual Model NDS and Maintenance Manual NDS Axles" annexed at the end of Section 10.

NOTE
For vehicles equipped with Independent Front Suspension, refer to Section 16 "Suspension".

9. DRIVE AXLE WHEEL HUBS

Drive wheels use a single oil-seal assembly. They are lubricated from the oil supply in the differential housing. Bearings are tapered rollers, adjustable to compensate wear. Maintain differential oil level with general-purpose gear lubricant (refer to Section 24 *"Lubrication"* for proper oil grade selection) to ensure adequate oil supply to wheel bearings at all times.

9.1 BEARING ADJUSTMENT

To adjust drive wheel bearings:

1. Raise vehicle until both dual wheels can be turned freely (approximately 6 inches from the ground). Position jack stands under drive axle, then lower vehicle approximately 2 inches in order to avoid entire weight of the axle being supported by the suspension air bellows and the shock absorber pins.
2. Remove axle shaft as indicated in *"Meritor - Maintenance Manual No. 5"* under heading *"Single Reduction Differential Carriers"* annexed to *"Section 11"* of this manual. Remove gaskets. Unscrew lock nut and remove adjusting nut lock ring.
3. To adjust, tighten adjusting nut until the wheel binds. Rotate the wheel while tightening so that all surfaces are in proper contact. Back off adjusting nut approximately, ¼ to 1/3 turn to assure 0.001/0.007" (0.0254/0.1778 mm) endplay and to ensure that wheel turns freely. Replace the lock ring, and adjust nut dowel pin in one of the holes. The ring may be turned over if necessary to allow more accurate bearing adjustment.
4. Tighten lock nut and check bearing adjustment. Replace the axle shaft using a new gasket.

9.2 DISASSEMBLY AND REPAIR

1. Jack vehicle as per "Bearing Adjustment" and remove axle shaft as indicated in *"Meritor - Maintenance Manual No. 5"* entitled *"Single Reduction Differential Carriers"* annexed to Section 11 of this manual.
2. Remove wheels and tires.

⚠ CAUTION ⚠
To replace wheel at the same location, always mark position of the wheel on the axle before removal, thus avoiding a new wheel balancing.

3. Remove lock nut, lock ring and adjusting nut from axle housing to prevent the outer bearing from falling out. Remove outer bearing cone and roller assembly.
4. Remove screws attaching inner oil seal retainer to hub, and remove inner oil seal assembly. Remove inner bearing cone and roller assembly. Bearing cups can be separated from the hub using a hammer and a long brass drift.
5. Thoroughly clean all parts. Bearing cone and roller assemblies can be cleaned in a suitable cleaning solvent using a stiff brush to remove old lubricant.
6. In case that excessive wear, deterioration, cracking or pitting is present on the bearing cups, rollers or cones, the bearings should be replaced. Seals should be replaced each time they are removed from the hub. To install new oil seal, use a suitable adapter and drive the seal into the retainer bore until it bottoms.
7. When installing wheel on spindle, center the wheel hub with spindle to avoid damaging the seal with the end of the spindle. Push wheel straight over the spindle until inside diameter of seal press fits on wiper ring. Fill hub cavity with general-purpose gear lubricant (refer to Section 24 *"Lubrication"* for proper oil grade selection). Lubricate, then install outer bearing cone. Adjust bearing and lock. Assemble axle flange to axle using a new gasket. Apply sealant in stud area. After both wheels have been assembled according to above procedure, fill the differential with the recommended lubricant to the proper factory recommended level.

NOTE
During regular inspection, do not forget to check lubricant level in differential. Clean thoroughly or replace vent as required.

10. SPARE WHEEL (IF APPLICABLE)

Tire failure is a rare event if tires are properly cared for. In case of a flat tire, move vehicle a safe distance away from traffic and apply parking brake. Remember to use the hazard flashers and according to the Highway Code regulations, set up the triangular reflectors (see *"Emergency Warning Reflectors"* in the Operator's Manual) at an adequate distance, to warn incoming motorists.

The spare wheel is stored in a dedicated compartment behind the front bumper. To access, pull the release handle located in the front service compartment. Although the bumper is heavy, sprung hinges permit one person operation.

When closing bumper compartment, make sure bumper is securely installed.

NOTE
Converted vehicles contain no spare wheel. Access to compartment is also obtained by pulling the release handle located in the front service compartment.

⚠ WARNING ⚠
This compartment has not been designed for storage. Never leave loose objects in this area since they may interfere with steering linkage mechanism. Make sure bumper is safely locked in place after closing the compartment.

10.1 PULLING OUT SPARE WHEEL

To remove the spare, untighten the pressure screw holding the tire in place, then press down on the spring loaded locking pin located at the top of the retaining bracket and remove the bracket. Using the strap, pull the spare out of the compartment (refer to the following illustrations). Rollers ease manipulation. Remove the protective cover. Install the flat in place of the spare by reversing the procedure. Do not forget to have the flat repaired as soon as possible.

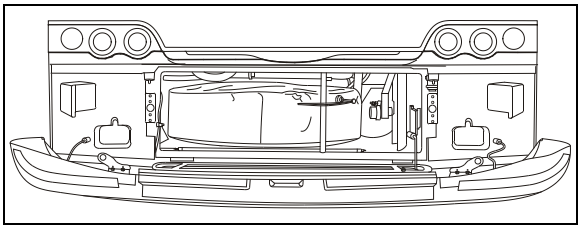

FIGURE 6: SPARE WHEEL COMPARTMENT

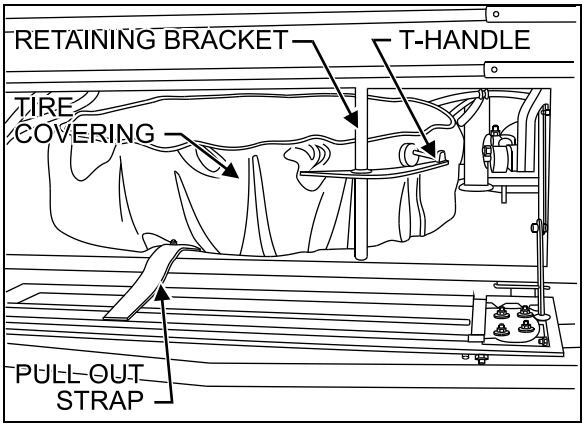

FIGURE 7: SPARE WHEEL AND TIRE 18415

NOTE
The jack and wheelnut wrench are either stored at right in forward baggage compartment or at left in rear baggage compartment.

The jack/tools kit stowed in the forward R.H. baggage compartment contains a:

1. Hydraulic jack;
2. Jack bar;
3. Wheel nut wrench and extension;
4. Triangular reflectors box.

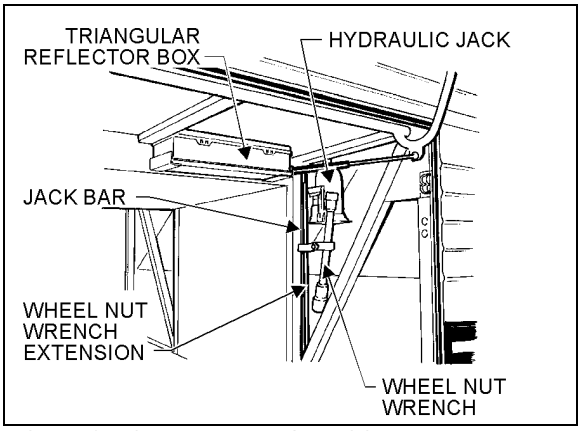

FIGURE 8: FORWARD R. H. SIDE COMPARTMENT 23012

NOTE
Check the inflation pressure of the spare tire periodically to keep it ready for use. Inflate spare tire to the pressure of the tire, which has the highest pressure on the vehicle. When installing, deflate to correct pressure if necessary.

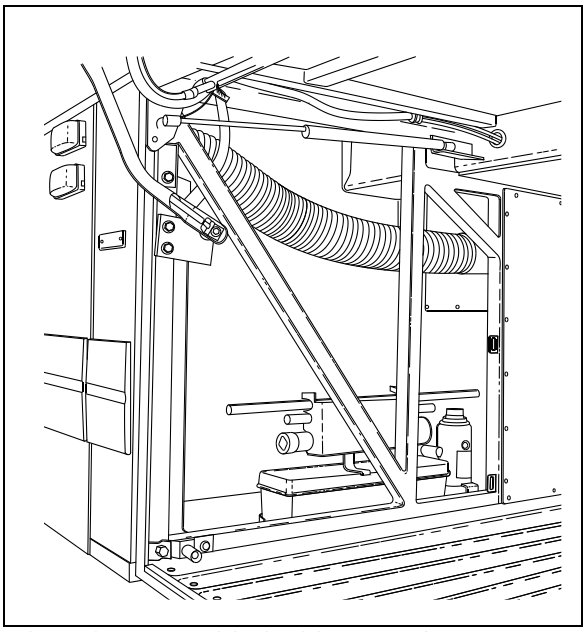

FIGURE 9: REAR BAGGAGE COMP. L.H. SIDE

10.2 CHANGING A FLAT

In case of flat tire, refer to appropriate procedure under “Wheel Maintenance" heading in this section.

NOTE
For hydraulic jack placement, refer to Section 18 "Body", under heading "Vehicle Jacking Points".

⚠ WARNING ⚠
Place jack on stable and level ground; if necessary, place a board under the jack. Do not raise the vehicle until you are sure the jack is securely engaged.

⚠ WARNING ⚠
To prevent personal injury and/or equipment damage, use only the recommended jacking points. Passengers must not remain inside vehicle while wheel is being replaced.

⚠ CAUTION ⚠
Adjust tire pressure according to the appropriate cold tire inflation-pressure.

NOTE
Store damaged wheel in spare tire compartment. Repair and balance the flat tire as soon as possible.

10.3 SPARE WHEEL MAINTENANCE

Maintenance of the spare wheel and tire consists in ensuring that tire inflation pressure is the same as the tire on the coach that has the highest inflation pressure (refer to “Specifications” in this section for the recommended tire inflation pressure). Inspect rim to ensure that there is no important corrosion. In addition, check if spare wheel covering is in good condition and check that spare tire is securely fastened in compartment.

11. TIRE MAINTENANCE

The most critical factor in tire maintenance is proper inflation (Fig. 10). No tire is impervious to loss of air pressure. To avoid the hazards of under inflation, always maintain tires at their recommended inflation pressure. Improper inflation decreases tire life.

An under inflated tire builds up heat that can cause sudden tire destruction, resulting in improper vehicle handling and possible loss of vehicle control. At least once a week, before driving (when tires are cold), check inflation pressure on all the tires, including the spare tire. This is especially important in cases when different drivers operate the vehicle.

⚠ WARNING ⚠
Failure to maintain correct tire inflation pressure may result in sudden tire destruction, improper vehicle handling, and will cause rapid and irregular tire wear. Inflation pressure should be checked weekly and always before long distance trips.

11.1 INFLATION PRESSURE

The condition and pressure of the tires can greatly affect both useful tire life and road safety.

At regular intervals, verify the tire pressures. Use an accurate tire pressure gauge when checking inflation pressures. Never exceed the maximum inflation pressure specified on each tire.

NOTE

Inflation pressure should be checked when tires are cold. Cold tire inflation pressure can be measured when a vehicle has not been driven for at least 3 hours or less than 1 mile (1.6 km). Driving, even for a short distance, causes tires to heat up and air pressure to increase. Check inflation pressure on all tires (including the spare tire) using an accurate tire gauge.

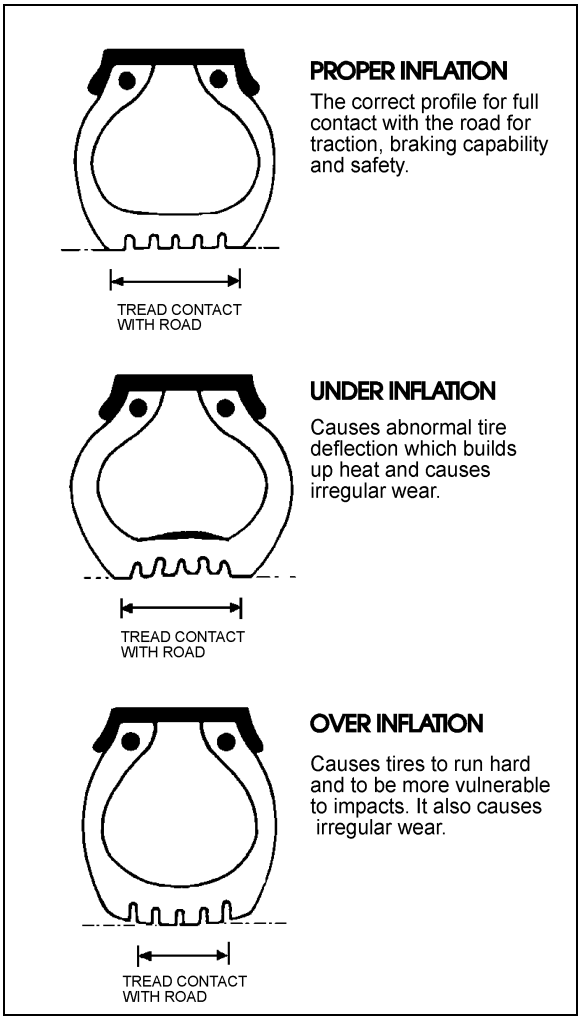

FIGURE 10: TIRE INFLATION 13009

NOTE

The recommended tire inflation pressures are given in the applicable documents supplied with the vehicle. In addition, cold tire inflation pressures are listed on the Department of Transport's certification plate, affixed on the panel behind the driver's seat. For special tire selection, a "PRÉVOST COACH SPECIAL SPECIFICATION" chart is supplied with the vehicle and is affixed on the left wall near the driver's seat. Remember, tire inflation pressure must be adjusted according to vehicle loading - see table in "Coach Final Record"

⚠ CAUTION ⚠

Never bleed air from hot tires as tires will then be under inflated. Use an accurate tire gauge to check pressures (Do not kick tires as an inflation check. This is an unreliable method).

⚠ CAUTION ⚠

These tire pressures are established in accordance with the maximum allowable load on each axle. A lower pressure is recommended if the axle load is less than the above specifications. Weigh vehicle fully loaded and pressurize according to tire manufacturer's recommendations. For other tire and wheel specifications, see Prévost tire pressure tabulation in "Coach Final Record".

⚠ WARNING ⚠

Incorrect tire pressures cause increased tire wear and adversely affect road holding of the vehicle, which may lead to loss of vehicle control.

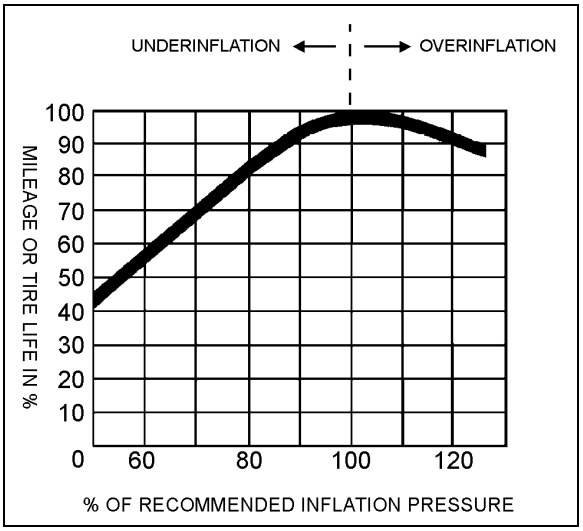

FIGURE 11: TIRE LIFE / INFLATION PRESSURE 13010

⚠ WARNING ⚠

Recommended tire inflation pressures and maximum allowable loads apply to speeds up to 65 mph (105 km/hr). Do not drive vehicle at a higher speed than 65 mph (105 km/h) or above the posted speed limit.

⚠ WARNING ⚠

All tires on the same axle should always be inflated to the same pressure. There should not be a difference in pressure between right and left tires on the same axle. A 5-psi (35-kPa) underinflation in one front tire can not only reduce vehicle maneuverability, but will create steering hazards which can lead to an accident.

11.2 TIRE MATCHING

Unmatched tires on drive axle will cause tire wear and scuffing, as well as possible damage to the drive unit. Consequently, we recommend that tires be matched within 1/8" (3 mm) of the same rolling radius.

NOTE

It is recommended that all tires on coach be of the same type.

11.3 WHEEL BALANCING

Before balancing, wheels must be clean and free from all foreign matter. The tires should be in good condition and properly mounted. An unbalanced wheel can be due to a bent wheel or improper mounting. Before removing the wheel from the vehicle, check for swaying movement and if necessary, check the wheel lateral runout as outlined under heading *"Wheel Straightness Check".*

⚠ WARNING ⚠

When balancing wheel and tire assemblies, it is strongly recommended to closely follow instructions covering the operation of wheel balancer.

⚠ CAUTION ⚠

A maximum of 16-oz (450 g) of balancing weight is recommended. If more weight is necessary, check and correct the cause.

11.4 TIRE ROTATION

Radial tires should be rotated only when necessary. If the tires are wearing evenly, there is no need to rotate. If irregular wear becomes apparent or if the wear rate on the tires is perceptively different (from axle to axle), then tires should be rotated in such a manner as to alleviate the condition.

NOTE

There is no restriction on criss-cross rotation.

12. SPECIFICATIONS

STEEL WHEELS (except inner drive axle)

Wheel size ..... 9.0" X 22.5"
Wheel nut torque ..... 450 - 500 lbf-ft (610 - 680 Nm)
Tire size ..... 315/80 R 22.5

STEEL WHEELS (inner drive axle)

Wheel size ..... 8.25" X 22.5"
Wheel nut torque ..... 450 - 500 lbf-ft (610 - 680 Nm)
Tire size ..... 315/80 R 22.5

ALUMINUM WHEELS (All wheels are 9" X 22.5" except inner drive axle on coaches)

Wheel size ..... 9" X 22.5"
Wheel nut torque ..... 450 - 500 lbf-ft (610 - 680 Nm)
Tire size ..... 315/80 R 22.5

SPECIAL WHEELS FOR VEHICLES EQUIPPED WITH IFS (Front & Tag axle)

Wheel size ..... 10.5" X 22.5"
Wheel nut torque ..... 450 - 500 lbf-ft (610 - 680 Nm)
Tire size ..... 365/70 R 22.5

RECOMMENDED TIRE INFLATION PRESSURE AT MAXIMUM LOAD (cold)

NOTE

Vehicle is delivered with the specific inflation pressure certification plate according to the tire selection.

⚠ WARNING ⚠

Special tire selection may lower maximum allowable speed limit, even below posted speed limit. For maximum safety, check with tire manufacturer.

⚠ CAUTION ⚠

In the case of a converted vehicle, weigh fully loaded and pressurize according to tire manufacturer's recommendations.

⚠ WARNING ⚠

Recommended tire inflation pressures and maximum allowable loads apply to speeds up to 65 mph (105 km/hr). Do not drive vehicle at a higher speed than 65 mph (105 km/h) or above the posted speed limit.

ALUMINUM WHEEL CLEANING AND MAINTENANCE PRODUCTS

Aluminum Wheel Cleaner (22 Oz bottle) ..... Prévost #683529
Aluminum Wheel Polish (16 Oz bottle) ..... Prévost #683528
Aluminum Wheel Sealer (13 Oz bottle) ..... Prévost #683527

SECTION 14: STEERING

CONTENTS

1. STEERING SYSTEM 14-3

1.1 DESCRIPTION 14-3

2. POWER STEERING GEAR 14-4

2.1 DESCRIPTION 14-4
2.2 POWER STEERING GEAR REMOVAL 14-5
2.3 POWER STEERING GEAR INSTALLATION 14-5

3. BLEEDING POWER STEERING HYDRAULIC SYSTEM 14-5

4. HYDRAULIC PRESSURE TEST 14-5

5. TROUBLESHOOTING 14-5

6. POWER STEERING HYDRAULIC PUMP 14-5

6.1 DESCRIPTION 14-5
6.2 REMOVAL AND INSTALLATION 14-5
6.3 MAINTENANCE 14-6

7. STEERING WHEEL 14-6

7.1 REMOVAL 14-6
7.2 INSTALLATION 14-6

8. STEERING COLUMN 14-6

8.1 REMOVAL 14-6

9. TURNING ANGLE ADJUSTMENT 14-6

10. STEERING LINKAGE ADJUSTMENT 14-7

11. PITMAN ARM 14-7

11.1 REMOVAL 14-7
11.2 INSTALLATION 14-9
11.3 ADJUSTMENT 14-9

12. MAINTENANCE 14-9

12.1 POWER STEERING RESERVOIR AND FILTER 14-10
12.1.1 Oil Level Check Procedure 14-10
12.1.2 Filter Replacement 14-10
12.2 STEERING STABILIZER CYLINDER (DAMPER) 14-11
12.3 DRAG LINK 14-11
12.4 POWER STEERING HYDRAULIC PUMP 14-11

13. DRIVING TIPS 14-11

14. TORQUE SPECIFICATIONS 14-11

15. SPECIFICATIONS 14-12

ILLUSTRATIONS

FIGURE 1: STEERING SYSTEM AXLE SETUP 14-3
FIGURE 2: POWER STEERING GEAR 14-4
FIGURE 3: FRONT SERVICE COMPARTMENT 14-4
FIGURE 4: STEERING COLUMN 14-6
FIGURE 5: PITMAN ARM ADJUSTMENT 14-7
FIGURE 6: FIXING NUT PUNCH MARK 14-9
FIGURE 7: HYDRAULIC FLUID RESERVOIR LOCATION 14-10
FIGURE 8: POWER STEERING FLUID RESERVOIR 14-10
FIGURE 9: STEERING STABILIZER (DAMPER) 14-11
FIGURE 10: DRAG LINK COMPONENTS 14-11
FIGURE 11: TIE ROD END 14-11
FIGURE 12: FRONT AXLE COMPONENTS 14-11

1. STEERING SYSTEM

1.1 DESCRIPTION

The steering system consists of the steering wheel and column assembly, a vane-type hydraulic pump, reservoir, filter, interconnecting system lines and hoses, integral power steering gear, linkage and steering damper (Fig. 1). The steering linkage includes the pitman arm, drag link, steering arm, tie rod arms and tie rod.

Hydraulic components are added to transmit, increase and regulate steering control forces.

These elements are:

1. Steering stabilizer (damper);
2. A vane type hydraulic pump; and
3. Hydraulic reservoir and hoses.

The steering stabilizer reduces road shocks and vibrations in the system. The steering gearbox is self powered and provides movement with power assistance to the left wheel.

Steering stability and tire wear are influenced by wheels, hubs, tires, air suspension, brakes, front suspension and front end alignment which are all covered in their respective sections in this manual.

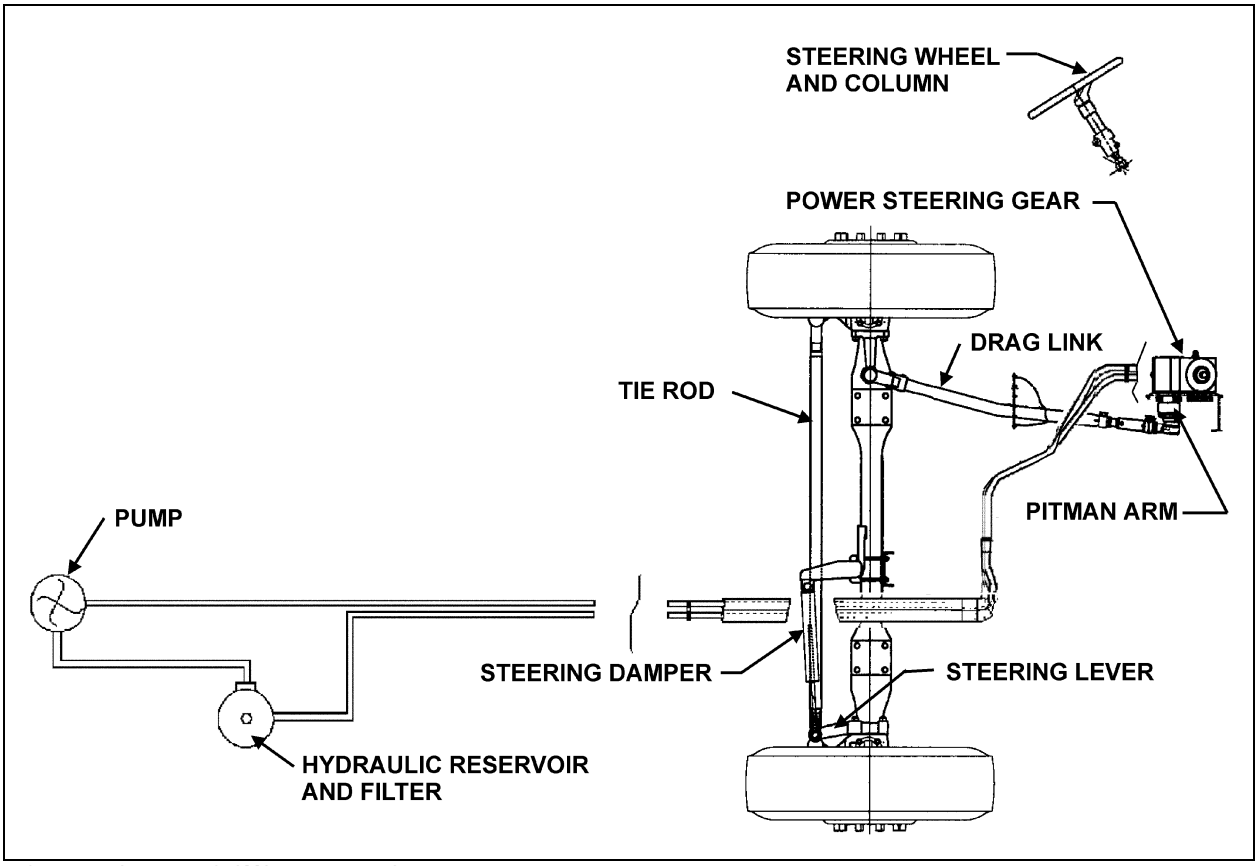

FIGURE 1: STEERING SYSTEM AXLE SETUP 14041

2. POWER STEERING GEAR

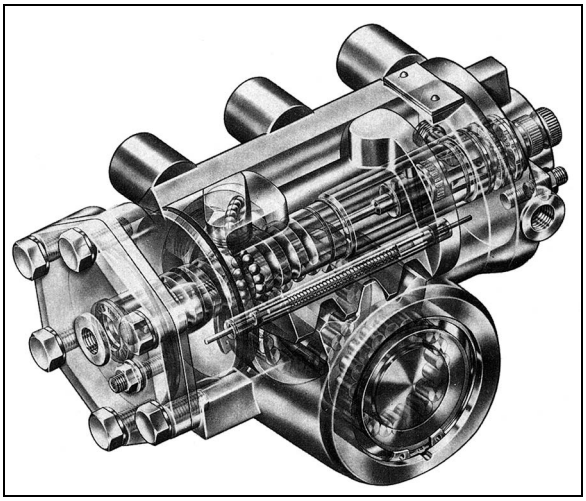

FIGURE 2: POWER STEERING GEAR 14035

2.1 DESCRIPTION

The power steering gear is located in the lower part of front service compartment (Figs. 2 & 3). The housing of the ZF-Servocom contains a control valve, working cylinder and a complete mechanical steering gear. The pressure oil for the steering is delivered by a motor-driven oil pump which is supplied with oil from an oil tank.

The housing is designed as a cylinder for the piston, which converts the rotation of the steering shaft and the worm into an axial movement and transfers this to the steering worm sector shaft. The serration of the sector shaft is straight-cut with a high surface quality in such a way that it is only possible to set a unique setting without play on installation in the straight-ahead driving area by means of the two eccentrically designed lateral housing covers.

The piston and worm are connected via a ball chain. When the worm is turned, the balls are collected by a circulating pipe at one end of the chain and fed in again at the other end, thus producing an endless ball chain.

The control valve consists of the valve slide in a needle bearing in the worm, with six control grooves on the circumference and the control sleeve on the worm, which also has six control grooves. The valve slide, designed with steering shaft connection, turns together with the worm as the steering wheel is turned.

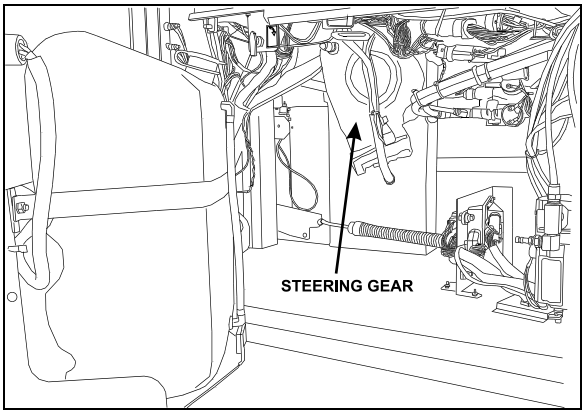

FIGURE 3: FRONT SERVICE COMPARTMENT 14039

A torsion bar, which is pinned with the valve slide and the worm, keeps the control valve in the neutral position as long as no opposing force is applied to the steering wheel. The steering housing contains a pressure relief valve, which limits the discharge pressure of the oil pump to the maximum value required. A replenishing valve can also be used, through which oil is sucked from the return if steering is not hydraulically boosted.

Compared with constant ratio, steering versions with variable ratio are more directly designed in the center area than outside the center area. The resulting smaller steering corrections benefit steering behavior in straight-ahead driving. At the same time, the indirect transmission means that there is a higher hydraulic torque available at the steering arm in parking movement. If the hydraulic assistance fails, the operating forces on the steering wheel are correspondingly lower in this area. This is achieved through a piston/steering worm sector shaft serration with differing modulus and angle of pressure.

Upon transfer of a torque from the steering shaft to the worm, or vice versa, the torsion bar is deformed in the elastic area so that there is torsion between the valve slide and the control sleeve. When the steering wheel is released, the torsion bar ensures that the valve is returned to the neutral position.

Refer to the *"ZF-SERVOCOM Repair Manual"* and "*ZF-SERVOCOM Operating, Servicing /Maintenance and Inspection Instructions"* annexed to this section for the functional aspects and maintenance procedure of the steering gear.

NOTE
Also available is the ZF-Servocomtronic, which provides variable assistance in function of speed.

2.2 POWER STEERING GEAR REMOVAL

⚠ WARNING ⚠

The steering gearbox weighs approximately 100 lbs (45 kg) dry. Exercise caution when handling.

1. Put a container into place, then disconnect both the inlet and outlet hoses from the power steering gear. Cover fittings to prevent fluid contamination.
2. Mark both the pitman arm and sector shaft with a line, then remove pitman arm. Refer to *"11.1 Pitman Arm Removal"* procedure.
3. Mark both the steering shaft universal joint yoke and steering gear input shaft with a line, then disconnect universal joint.
4. Unscrew and remove the power steering gear.

2.3 POWER STEERING GEAR INSTALLATION

Reverse *"Power Steering Gear Removal"* procedure paying particular attention to the following:

1. Tighten fasteners as recommended under paragraph 14: *"Torque Specifications".*
2. Bleed air from the system as per step 3, next.

3. BLEEDING POWER STEERING HYDRAULIC SYSTEM

To bleed the power steering hydraulic system, refer to the *"ZF-SERVOCOM Repair Manual"* annexed to this section, under heading *"Setting And Functional Test"*.

4. HYDRAULIC PRESSURE TEST

Perform a pressure test as outlined in the *"ZF-SERVOCOM Repair Manual"* annexed to this section under heading *"Setting And Functional Test"*.

5. TROUBLESHOOTING

Perform troubleshooting of the steering gear as outlined in the *"ZF-SERVOCOM Repair Manual"*, the *"ZF-SERVOCOM Operating, Servicing /Maintenance and Inspection Instructions* and the *"TRW - Power Steering Pump Service Manual"* and the "TRW - Chart Your Way To Easy Steering" guide annexed to this section.

NOTE

For vehicles equipped with ZF-SERVOCOMTRONIC unit, refer to the supplement to the repair manual ZF-SERVOCOM.

6. POWER STEERING HYDRAULIC PUMP

6.1 DESCRIPTION

The power steering pump is a vane type, gear driven, hydraulic unit which supplies hydraulic pressure for the operation of the steering gear. The pump is mounted on the engine, on the crankshaft pulley's R.H. side.

6.2 REMOVAL AND INSTALLATION

The pump is accessible through the engine compartment rear door.

To remove the pump, proceed as follows:

1. Put an empty container directly below pump, then disconnect both the inlet and outlet hoses from the pump. Block fitting cavities to prevent fluid contamination.
2. Remove the two (2) mounting screws, then slowly pry out the pump.
3. Remove and discard gasket.

⚠ CAUTION ⚠

Inspect the drive coupling thoroughly, and replace if necessary (the drive coupling is a fiber component located between the engine and the pump).

For pump installation, reverse the removal procedure paying particular attention to the following:

⚠ CAUTION ⚠

Ensure that drive coupling is correctly positioned before reinstalling the pump.

1. Install a new gasket (Prévost P/N 510488).
2. Bleed air from the system as per step 3, *"Bleeding Power Steering Hydraulic System"*.

6.3 MAINTENANCE

Refer to the *"ZF-SERVOCOM Repair Manual"* and the *"TRW - Power Steering Pump Service Manual"* annexed to this section.

7. STEERING WHEEL

7.1 REMOVAL

1. Set the battery master switch located in the R.H. side rear service compartment, or the engine compartment to the *"OFF"* position.
2. Using a tool, such as a small flat head screwdriver, pry off the air horn cap.
3. Loosen the small screw in center of cap and the other retaining the black wire, then disconnect the white terminal. Remove horn cap.
4. Loosen and remove the steering wheel nut.
5. Using a suitable puller, remove the steering wheel.

7.2 INSTALLATION

To install, reverse the removal procedure. Torque steering wheel nut to 35-45 lbf-ft (47-60 Nm).

8. STEERING COLUMN

8.1 REMOVAL

To disassemble the steering column from system, refer to Figure 4. The steering column has no lubrication points. The lower steering column U-joint is easily accessible through the front service compartment. The upper steering column U-joint and the steering slip joint are accessible from the front driver's area. To access these joints, proceed as follows:

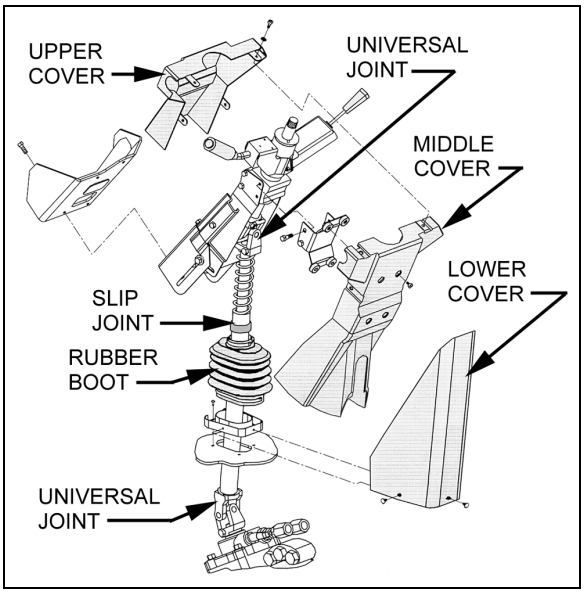

FIGURE 4: STEERING COLUMN 14040

1. From the front driver's compartment area, remove the three plastic fasteners on steering column lower cover. Remove the lower cover (Fig. 4).
2. Unscrew the four retaining screws on steering column middle cover.
3. Unscrew the four retaining screws fixing steering column upper cover to middle cover. Remove the steering column middle and upper covers.
4. Position the steering wheel in order to gain access to the joints.

9. TURNING ANGLE ADJUSTMENT

The maximum turning angle is set through two (2) steering stop screws installed on the axle center. Steering stop screws are factory adjusted to accommodate the chassis design, and therefore, do not require adjustment on new vehicles. However, these should be checked and adjusted if necessary, any time a steering system component is repaired, disassembled or adjusted. Refer to section 10 *"Front Axle"* under heading *"6.4 "Turning Angle Adjusment".*

⚠ CAUTION ⚠

To prevent the steering damper from interfering with the adjustment of turning angles, make sure its fixing bracket is at correct location on the axle (refer to "12.2 Steering Stabilizer Cylinder (Damper)).

Hydraulic Stop

⚠ CAUTION ⚠

***Reduce or shut off the power steering hydraulic pressure before the boss on the axle touches the stop screw. If not, the components of the front axle will be damaged (refer to* "ZF-SERVOCOM Repair Manual" *and "ZF-SERVOCOM Operating, Servicing/Maintenance and Inspection Instructions" annexed to this section, under heading* "Setting The Steering Limiter").**

⚠ CAUTION ⚠

Never maintain the relief pressure for more than 5 seconds, since damage to the power steering pump may occur.

10. STEERING LINKAGE ADJUSTMENT

The steering linkage includes the pitman arm, drag link, steering arm, tie rod arms and tie rod.

Perform lubrication according to *"DANA SPICER NDS Axles Lubrication and Maintenance"* annexed to section 10 *"Front Axle".*

Drag link ends are provided with grease fittings. Under normal conditions, these should be serviced every 6,250 miles (10 000 km). Refer to section 24 *"Lubrication".*

Steering linkage pivot points should be checked each time they are lubricated. Looseness can be visually detected while rotating the steering wheel in both directions. Replace defective parts.

⚠ CAUTION ⚠

***Front wheel alignment should be checked and adjusted if necessary, any time a component of the steering system is repaired, disassembled or adjusted. Refer to section 10* "Front Axle" *under heading* 6. "Front Wheel Alignment".**

11. PITMAN ARM

11.1 REMOVAL

1. Remove cotter pin, nut and washers from drag link ball stud at pitman arm.
2. Disconnect drag link from pitman arm, using jaw style pullers (pressure screw type).

⚠ WARNING ⚠

Always wear approved eye protection when operating pullers.

⚠ CAUTION ⚠

Do not drive (hammer in) pitman arm on or off pitman shaft as this can damage the steering gear.

⚠ CAUTION ⚠

Heating of components to aid in disassembly is not allowed because it has a detrimental effect on axle components and steering linkages.

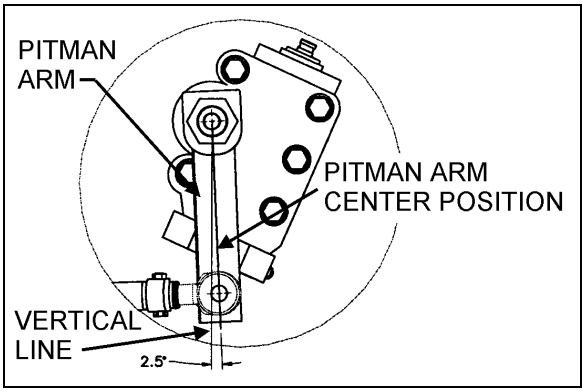

FIGURE 5: PITMAN ARM ADJUSTMENT 14037

3. Using a cold chisel, undo punch mark that locks fixing nut to the pitman arm.
4. Remove pitman arm fixing nut.
5. Check the radial position of the pitman arm in relation to the sector shaft prior to removal of pitman arm.
6. Add reference marks to the arm and shaft if necessary to ensure correct alignment at reassembly.

7. You must use a puller to remove pitman arm.

11.2 INSTALLATION

1. Position pitman arm on sector gear shaft with reference marks aligned.
2. Install fixing nut (Prévost #661050). Tighten nut to 400-450 lbf-ft (545-610 Nm).

NOTE
Use a new nut if the previously removed nut was punched.

3. Lock nut with sector shaft using a punch mark into the groove (Refer to figure 6).

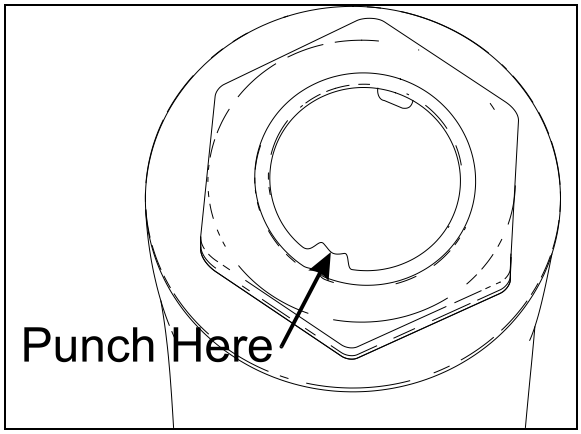

FIGURE 6: FIXING NUT PUNCH MARK 16098

4. Connect drag link to pitman arm while ensuring that rubber stabilizer is in place on the rod end. Install washers. Tighten nut to 160-215 lbf-ft (220-290 Nm). Afterwards, install a new cotter pin.

⚠ CAUTION ⚠
Input shaft marks must be aligned before adjusting pitman arm.

11.3 ADJUSTMENT

1. Disconnect the drag link from pitman arm. Center steering wheel by dividing the total number of steering wheel turns in two. Scribe a reference mark on steering gearbox at the center previously determined.
2. Using a protractor, check the angle of the pitman arm (refer to Fig. 5 for details).
3. The pitman arm should be adjusted to an angle of 2.5º in relation with the vertical axis (towards front of vehicle). If not, unscrew and remove fixing nut. Remove the pitman arm according to the procedure outlined under previous heading *"Pitman arm removal"*. Adjust to the proper angle.
4. When adjustment is achieved, replace fixing nut and torque to 400-450 lbf-ft (545-610 Nm).

12. MAINTENANCE

The power steering system requires little maintenance. However, the system should be kept clean to ensure maximum operating performance and troublefree service. Periodic inspections should also be made to check for leakage and all parts for damage or distortion. Insure all fasteners are tight (see *"14. Specifications"* for recommended tightening torques.

When the slightest evidence of dirt, sludge or water is discovered in the system, disconnect fluid lines at the power steering gear to drain the system. Drain and refill the system with *"Dexron-IIE or Dexron-III"* automatic transmission oil.

Air in the hydraulic system will cause spongy action and noisy operation. When a hose has been disconnected or when fluid has been lost for any reason, the system must be bled. Bleed system as outlined under heading 3*: "Bleeding Power Steering Hydraulic System".*

⚠ WARNING ⚠
Do not operate the pump without fluid in the power steering fluid reservoir.

If the steering linkage between the steering gear and the two front wheels is not properly adjusted, or if it is bent, twisted or worn, the steering of the vehicle will be seriously impaired. Whenever a steering linkage part is repaired, replaced or adjusted, steering geometry and front wheel alignment must be checked and necessary corrections made. Refer to section 10 *"Front Axle"* under heading 6: *"Front Wheel Alignment"*.

At regular lubrication intervals, the steering linkage should be thoroughly inspected for worn or loose components.

After the vehicle has been operated continually and high mileage figures have been reached, overhaul of the various steering units will be required. General overhaul procedure normally requires removal of the entire assembly, cleaning and inspection of all parts and final assembly.

Careful inspection of all parts during overhaul is very important and must not be neglected.
Lubrication fittings must all be cleaned before applying lubricant. Moreover, always be sure the equipment used in applying lubricant is clean. Every precaution should be taken to prevent entry of dirt, grit, lint or other foreign matter into lubricant containers. Replace fittings that have become broken or damaged. Lubrication intervals, as well as the recommended lubricants for the steering components, are given in the *"Lubrication And Servicing Schedule"* in Section 24 of this manual. The intervals given in the schedule are recommended for normal service. More frequent intervals may be required under severe operating conditions.

12.1 POWER STEERING RESERVOIR AND FILTER

The power steering reservoir is located on R.H. side of engine compartment and accessible through the engine compartment doors. (Fig. 7).

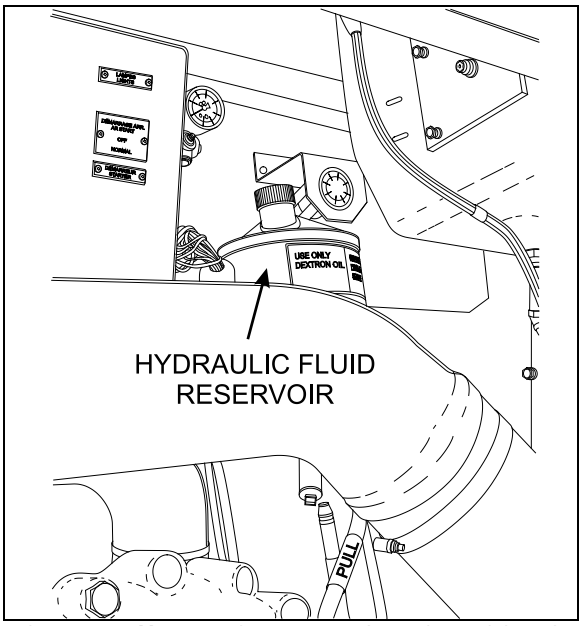

FIGURE 7: HYDRAULIC FLUID RESERVOIR LOCATION 14044

At regular intervals, fluid level should be checked in the reservoir and filter assembly. Furthermore, the oil filter cartridge element in the power steering reservoir should be replaced every 50,000 miles (80 000 km) or once a year, whichever comes first.

12.1.1 Oil Level Check Procedure

1. Stop engine. Open engine compartment R.H. side door.
2. Unscrew and remove the dipstick located on top of reservoir and wipe with a clean rag.
3. Insert dipstick in reservoir. Remove it again to check fluid level (Fig. 8).
4. Adjust level to *"FULL"* mark using proper dipstick side depending on fluid temperature, use *"Dexron-IIE or Dexron-III"* automatic transmission oil.
5. Reinsert and tighten the dipstick.

12.1.2 Filter Replacement

1. Unscrew and remove the cover nut located on top of the power steering reservoir.
2. Remove the reservoir cover and the gasket.
3. Remove the retaining spring and finally the filter cartridge element.

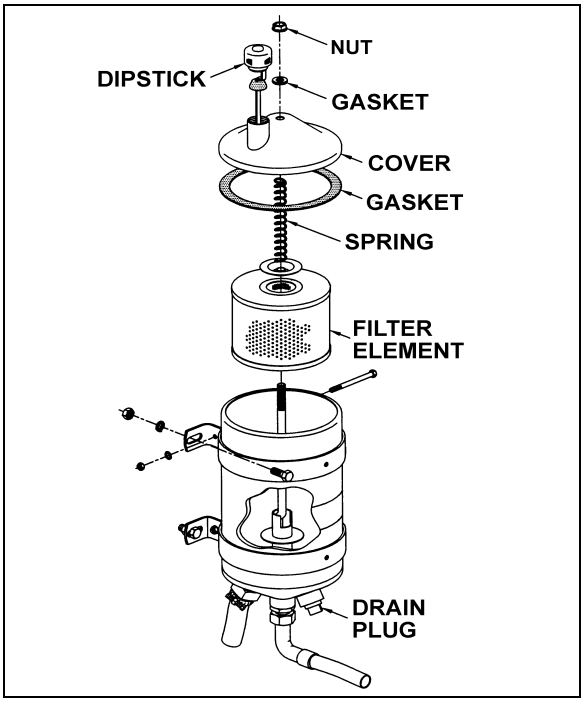

FIGURE 8: POWER STEERING FLUID RESERVOIR 14018A

12.2 STEERING STABILIZER CYLINDER (DAMPER)

The steering damper is located on R.H. side, at back of front axle (Fig.9).

The cylinder is nonadjustable and non-repairable. Check for oil leaks or lack of resistance. Disconnect the cylinder from axle, then carefully attempt to extend and collapse it manually.

The rod end (ball joint) is provided with a grease fitting. Under normal conditions, it should be serviced every 6,250 miles (10 000 km) or twice a year, whichever comes first. Good quality lithium-base grease NLGI No. 1 and 2 are recommended (refer to section 24 *"Lubrication")*. Check the ball joint for wear, and replace if necessary.

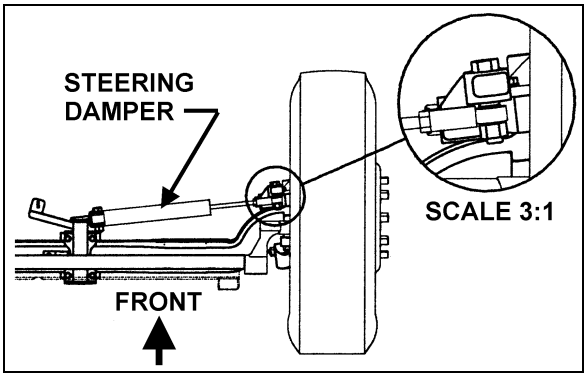

FIGURE 9: STEERING STABILIZER (DAMPER) 14042

12.3 DRAG LINK

Lubricate the fittings every 6,250 miles (10 000 km) or twice a year, whichever comes first. Good quality lithium-base grease NLGI No. 1 and 2 are recommended (refer to section 24 *"Lubrication")*.

12.4 POWER STEERING HYDRAULIC PUMP

For maintenance of the power steering hydraulic pump, refer to the *"TRW - Power Steering Pump Service Manual"* annexed to this section.

13. DRIVING TIPS

In order to maximize power steering pump service life, do not attempt to turn the steering wheel when the vehicle is stationary, and especially when service brakes are applied (wheel locking will oppose the effect of steering geometry which tends to make the front wheels rotate in opposite directions).

Persisting in turning, or maintaining the steering wheel with an extra effort, could make the hydraulic system work at the relief pressure, and consequently, cause the hydraulic fluid to become overheated.

⚠ CAUTION ⚠

Never maintain the hydraulic system at the relief pressure for longer than 5/10 seconds to avoid damaging the power steering pump.

NOTE

Unequal or low tire pressure, oversize tires, and vehicle overloading are some of the causes that may increase steering effort.

14. TORQUE SPECIFICATIONS

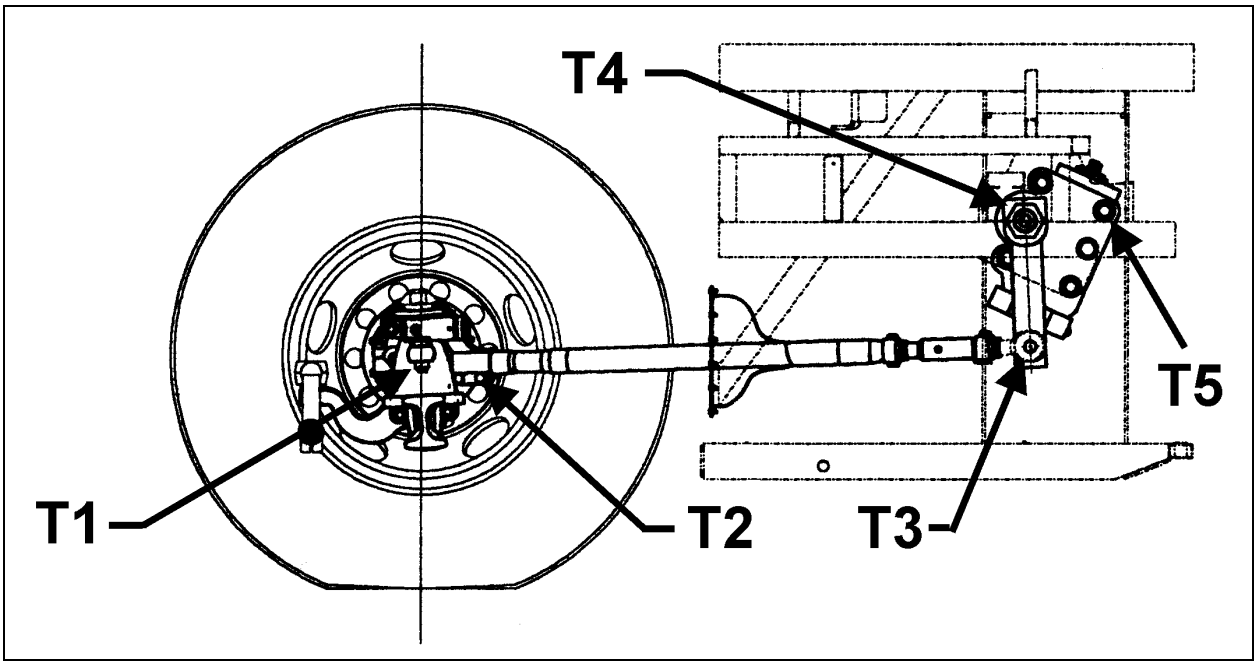

FIGURE 10: DRAG LINK COMPONENTS 14038

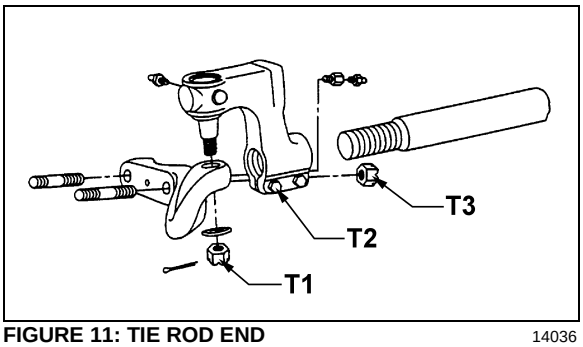

FIGURE 11: TIE ROD END 14036

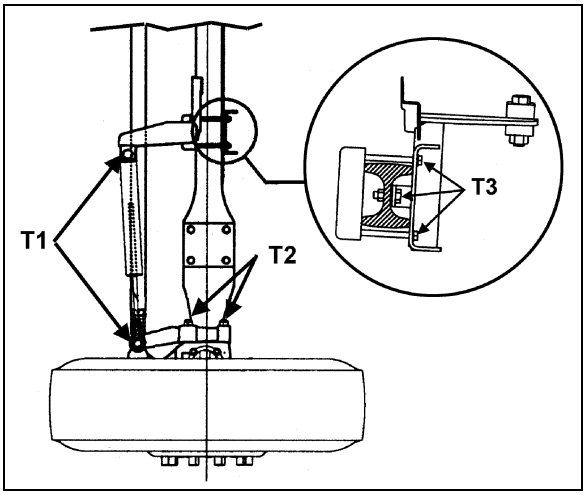

FIGURE 12: FRONT AXLE COMPONENTS 14045

DRY TORQUES			
Description	**Reference**	**Lbf-ft**	**Nm**
Drag Link End Stud Nut (on steering arm)	Fig. 10, T1	160-300	220-410
Drag Link End Pinch Bolt Nuts	Fig. 10, T2	50-65	70-90
Drag Link End Stud Nut (on pitman arm)	Fig. 10, T3	160-215	220-290
Pitman Arm Fixing Nut	Fig. 10, T4	400-450	545-610
Tie Rod End Screw Pin Nut	Fig. 11, T1	100-175	135-240
Tie Rod End Pinch bolt Nuts	Fig. 11, T2	65-75	90-100
Lower Lever Stud Nuts	Fig.11, T3	190-275	260-375
Steering Stabilizer (damper) Fixing Nuts	Fig. 12, T1	100-120	135-165
Steering Top Lever Nuts	Fig. 12, T2	150-200	205-275
Steering Damper Mounting Support Nuts	Fig. 12, T3	65-70	90-95

TORQUE (LUBRICATED WITH LOCTITE #242 BLUE)			
Description	**Reference**	**Lbf-ft**	**Nm**
Steering Gear Fixing Bolts (5)	Fig. 10, T5	265-310	360-420

15. SPECIFICATIONS

Power Steering Gear

Make ..... ZF-SERVOCOMTRONIC
Model 8098
Supplier number 8098-988-571
Prevost number 661044
F.E.W. ..... 16,600 lbs (7 545 kg)
Pressure rating ..... 2,175 psi (150 Bar)
Gear ratio (center) ..... 22.2 : 1
Gear ratio (extremities) ..... 26.2 : 1
Minimum pump flow for 1.5 hwt/sec ..... 4.22 gpm (16 lpm)

Power Steering Gear

Make ..... ZF-SERVOCOM
Model 8098
Supplier number 8098-988-570
Prevost number 661045
F.E.W. ..... 16,600 lbs (7 545 kg)
Pressure rating ..... 2,175 psi (150 Bar)
Gear ratio (center) ..... 22.2 : 1
Gear ratio (extremities) ..... 26.2 : 1
Minimum pump flow for 1.5 hwt/sec ..... 4.22 gpm (16 lpm)

Power Steering Pump

Make ..... TRW
Type ..... PS Series
Relief valve setting ..... 2,175 psi (14 990 kPa)
Controlled flow rate ..... 4.23 gpm (16 lpm)
Inlet port ..... 1 1/4 NPT
Outlet port ..... 3/4-16 straight thread SAE O' ring boss conn.
Supplier number PS251615L10200
Prevost number 661009
Gasket - Supplier number 23516100
Gasket - Prevost number 510488

Power Steering Reservoir

Make ..... Nelson Muffler
Oil capacity ..... 4 US qts (3.7 liters)
Supplier number 91410A
Prevost number 660982
Make ..... Nelson Muffler
Element filter - Supplier number ..... 83804 E
Element filter - Prevost number 660987

Steering Stabilizer Cylinder (Damper)

Make ..... Arvin
Extended length ..... 32.73±0.12"
Collapsed length ..... 20.26±0.12"
Stroke ..... 12.47±0.12"
Supplier number 651535
Prevost number 660979
Dust cap - Prevost number 660980

SECTION 16: COACHES EQUIPPED WITH INDEPENDENT FRONT SUSPENSION (IFS)

CONTENTS

1. INTRODUCTION ..... 16(COACH)-4

2. STEERING LINKAGE ..... 16(COACH)-4

2.1 POWER STEERING HYDRAULIC PUMP ..... 16(COACH)-6
2.2 STEERING LINKAGE ADJUSTMENT ..... 16(COACH)-6
2.3 PITMAN ARM REMOVAL ..... 16(COACH)-7
2.4 PITMAN ARM INSTALLATION ..... 16(COACH)-7
2.5 DRAG LINK ..... 16(COACH)-7
2.5.1 Adjustment ..... 16(coach)-7
2.6 BELL CRANK AND IDLER ARM ..... 16(COACH)-8
2.6.1 Bell Crank and Idler Arm Removal ..... 16(coach)-8
2.6.2 Bell crank or Idler Arm Ball Joint Disassembly ..... 16(coach)-8
2.6.3 Bell Crank or Idler Arm Ball Joint Reassembly ..... 16(coach)-8
2.7 RELAY ROD ..... 16(COACH)-9
2.7.1 Replacement ..... 16(coach)-9
2.8 TIE RODS ..... 16(COACH)-10
2.8.1 Removal ..... 16(coach)-10
2.8.2 Installation ..... 16(coach)-10
2.9 STEERING ARMS ..... 16(COACH)-10
2.9.1 Removal ..... 16(coach)-10
2.9.2 Installation ..... 16(coach)-10
2.10 LUBRICATION FITTINGS ..... 16(COACH)-11

3. BALL JOINTS ..... 16(COACH)-12

4. LOWER AND UPPER A-ARM BALL JOINT ..... 16(COACH)-12

4.1 STRIPPING DOWN ..... 16(COACH)-12
4.2 ASSEMBLY ..... 16(COACH)-12

5. LOWER A- ARM CENTRAL BALL JOINT ..... 16(COACH)-13

5.1 STRIPPING DOWN ..... 16(COACH)-13
5.2 ASSEMBLY ..... 16(COACH)-13

6. UPPER A-ARM CENTRAL BALL JOINT ..... 16(COACH)-14

7. FRONT END ALIGNMENT ..... 16(COACH)-14

7.1 ALIGNMENT TERMINOLOGY ..... 16(COACH)-15
7.2 FRONT END INSPECTION ..... 16(COACH)-15
7.3 FRONT WHEEL CAMBER ..... 16(COACH)-16
7.4 FRONT WHEEL TOE-IN ..... 16(COACH)-16
7.4.1 Toe-In Check ..... 16(coach)-16
7.4.2 Toe-In Adjustment ..... 16(coach)-16
7.5 FRONT AXLE CASTER ..... 16(COACH)-16
7.6 MAJOR DAMAGE ..... 16(COACH)-16

8. FRONT AIR SPRINGS ..... 16(COACH)-18

8.1 INSPECTION ..... 16(COACH)-18
8.2 REMOVAL ..... 16(COACH)-18
8.3 INSTALLATION ..... 16(COACH)-18

9. SHOCK ABSORBERS ..... 16(COACH)-19

9.1 SHOCK ABSORBER REMOVAL ..... 16(COACH)-20
9.2 SHOCK ABSORBER INSTALLATION ..... 16(COACH)-20

10. SWAY BAR ..... 16(COACH)-20

10.1 REMOVAL ..... 16(COACH)-20
10.2 INSTALLATION ..... 16(COACH)-20

11. SUSPENSION HEIGHT ADJUSTMENT ..... 16(COACH)-22

12. HEIGHT CONTROL VALVE ..... 16(COACH)-23

12.1 LOADING POSITION ..... 16(COACH)-23
12.2 NEUTRAL POSITION ..... 16(COACH)-23
12.3 UNLOADING POSITION ..... 16(COACH)-23
12.4 MAINTENANCE ..... 16(COACH)-23
12.5 REMOVAL AND INSTALLATION ..... 16(COACH)-23

13. AIR SYSTEM ..... 16(COACH)-23

13.1 AIR TANK MAINTENANCE ..... 16(COACH)-23
13.1.1 Wet Air Tank ..... 16(coach)-23
13.1.2 Primary Air Tank ..... 16(coach)-24
13.1.3 Secondary Air Tank ..... 16(coach)-24
13.1.4 Accessory Air Tank ..... 16(coach)-24
13.1.5 Expansion Air Tank ..... 16(coach)-25
13.2 EMERGENCY FILL VALVES ..... 16(COACH)-25

14. HUB UNIT AND SWIVEL ASSEMBLY ..... 16(COACH)-25

15. TORQUE TABLE ..... 16(COACH)-25

16. SPECIFICATIONS ..... 16(COACH)-27

ILLUSTRATIONS

FIGURE 1: SUSPENSION AND STEERING LINKAGE ..... 16(COACH)-4
FIGURE 2: LOCATION OF CLAMPS ..... 16(COACH)-5
FIGURE 3: CLAMP POSITIONING ..... 16(COACH)-6
FIGURE 4: CLAMP POSITIONING ..... 16(COACH)-6
FIGURE 5: CLAMP POSITIONING ..... 16(COACH)-6
FIGURE 6: PITMAN ARM ALIGNMENT ..... 16(COACH)-6
FIGURE 7: FIXING NUT PUNCH MARK ..... 16(COACH)-7
FIGURE 8: BELL CRANK ..... 16(COACH)-8
FIGURE 9: BELL CRANK ..... 16(COACH)-8
FIGURE 10: BELL CRANK AND IDLER ARM BALL JOINT ..... 16(COACH)-9
FIGURE 11: LUBRICATION FITTINGS' LOCATION DIAGRAM ..... 16(COACH)-11
FIGURE 12: BALL JOINTS LOCATION ..... 16(COACH)-12
FIGURE 13: A-ARM BALL JOINTS ..... 16(COACH)-12
FIGURE 14: LOWER A-ARM BALL JOINTS ..... 16(COACH)-13
FIGURE 15: UPPER A-ARM BALL JOINTS ..... 16(COACH)-13
FIGURE 16: LOWER A-ARM CENTRAL BALL JOINT ..... 16(COACH)-14
FIGURE 17: UPPER A-ARM CENTRAL BALL JOINT ..... 16(COACH)-14
FIGURE 18: STEERING LINKAGE MEASURE ..... 16(COACH)-15
FIGURE 19: FRONT END ALIGNMENT DIAGRAM ..... 16(COACH)-17
FIGURE 20: AIR SPRINGS ..... 16(COACH)-18
FIGURE 21: AIR SPRING AND SHOCK ABSORBER ..... 16(COACH)-19
FIGURE 22: SHOCK ABSORBER ..... 16(COACH)-20
FIGURE 23: SWAY BAR (FRONT SUSPENSION) ..... 16(COACH)-21
FIGURE 24: SWAY BAR (REAR SUSPENSION) ..... 16(COACH)-21
FIGURE 25: TYPICAL AIR SPRING CLEARANCE ..... 16(COACH)-22
FIGURE 26: FRONT HEIGHT CONTROL VALVE ..... 16(COACH)-22
FIGURE 27: LOCATION OF AIR TANKS ..... 16(COACH)-24
FIGURE 28: REAR VALVE LOCATION ..... 16(COACH)-24
FIGURE 29: FRONT VALVE LOCATION ..... 16(COACH)-25

1. INTRODUCTION

This supplement contains service procedures and specifications that apply to the PREVOST coaches equipped with an independent front suspension.

This text contains information unique to the independent suspension system. In the case you cannot find information on a subject in this supplement section, the information given in the regular sections of the Maintenance Manual will apply.

2. STEERING LINKAGE

Turning motion of the steering wheel is transferred by the steering gear and steering linkage to the steering arms at the right and left front wheels. The steering linkage consists of tie rods connected to the bell crank and the steering arm at the left side of the coach, and to the idler arm and steering arm at the right side of the coach. The bell crank and idler arm are connected by a relay rod. A drag link connected to the bell crank and the pitman arm, which is mounted to the steering gear, transfers the turning motion of the steering wheel to the steering arms (Fig. 1).

Lower and upper A-arms are widely spaced. They are mounted on ball joints. Torque rods prevent rotation of the uprights around the lower and upper ball joints.

If the steering linkage is bent, twisted or worn, steering action of the coach will be seriously affected. Any time steering linkage components are replaced or adjusted, steering geometry and front wheel alignment must be checked as explained in this section of supplement.

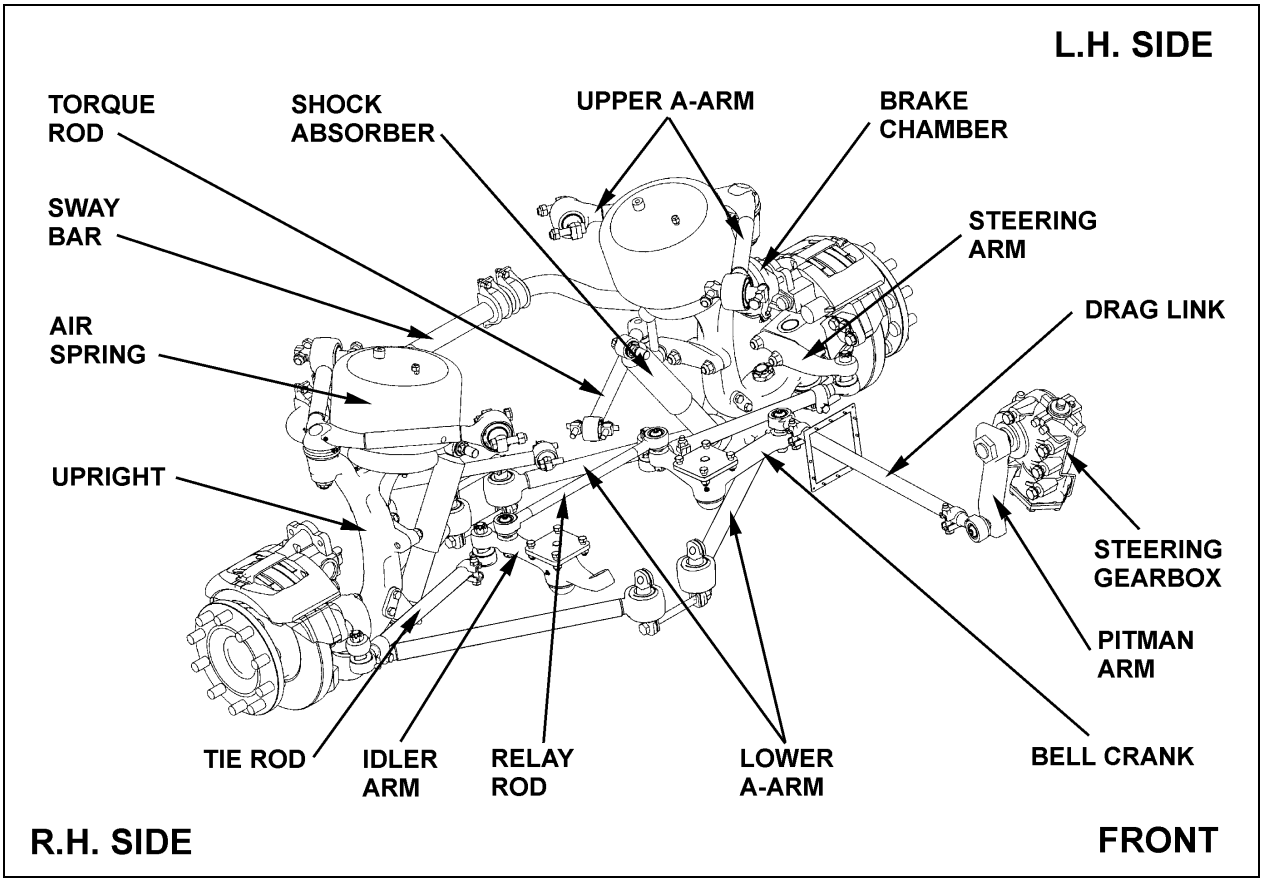

FIGURE 1: SUSPENSION AND STEERING LINKAGE 16125

Turning Angle

The maximum turning angle is set mechanically through the two steering stop screws installed on the swivel assembly. The turning angle (56° + 0° - 1°) mechanical stop is factory adjusted to accommodate the chassis design, and therefore, does not require adjustment on new vehicles.

However, turning angle should be checked and adjusted hydraulically, if necessary, any time a component of the steering system is repaired, disassembled or adjusted.

Before checking the turning angle, be sure the front end is properly aligned as described under paragraph "4. Front End Alignment" in this supplement.

To check steering maximum turning angle, proceed with the following method:

1. Check if front tires rub against the frame or if the steering gear has been serviced.

⚠ CAUTION ⚠
If clamps are not correctly installed, they can interfere with other parts.

2. For a full left and right turn, check clamps' position and for interfering parts. Refer to figures 2 to 5 for location and positioning of clamps. If readjustment is required, make the proper adjustment.

NOTE
Prior to steering limiter adjustment, verify vehicle wheel alignment, and ensure that oil level is adequate and that air bleeding is done.

3. If necessary readjust steering limiter. Refer to "ZF-SERVOCOM Repair Manual" annexed to XL2 Maintenance Manual, Section 14, "Steering", under heading: "Setting and Functional Test".

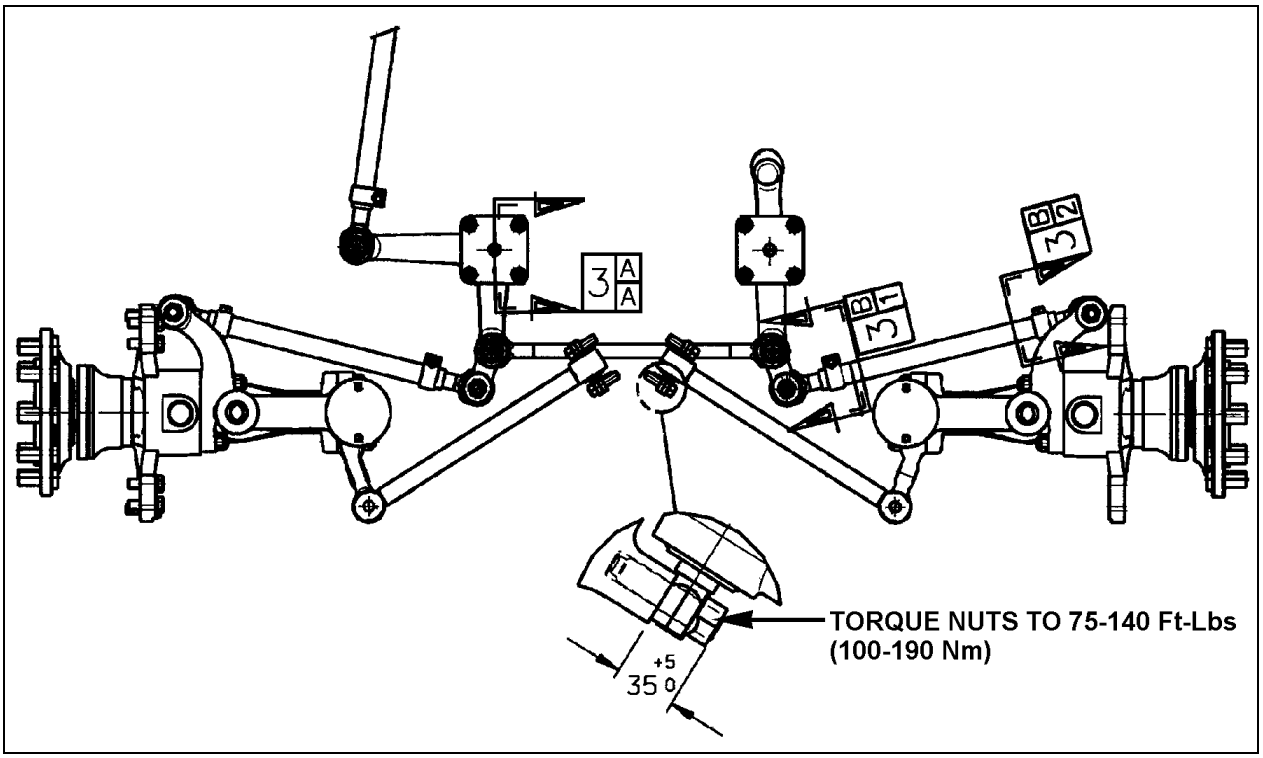

FIGURE 2: LOCATION OF CLAMPS 16127

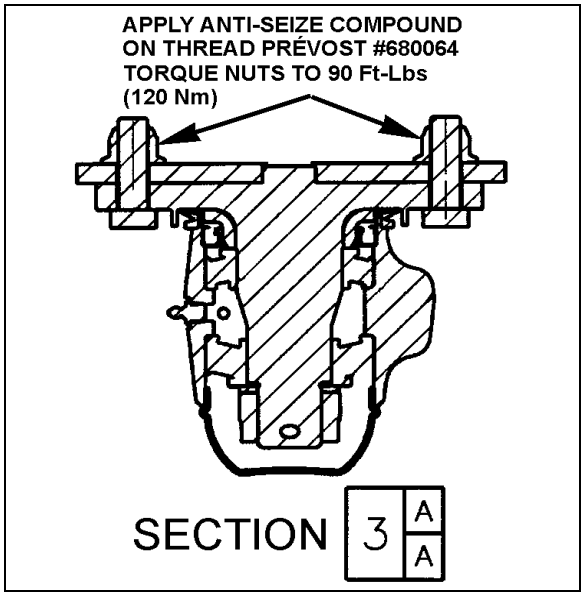

FIGURE 3: CLAMP POSITIONING 16128

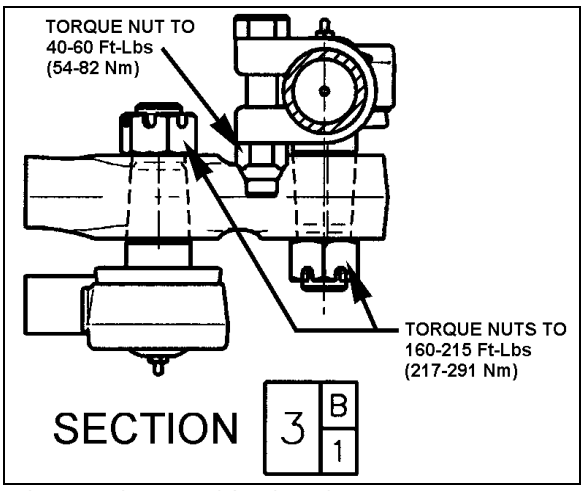

FIGURE 4: CLAMP POSITIONING 16120

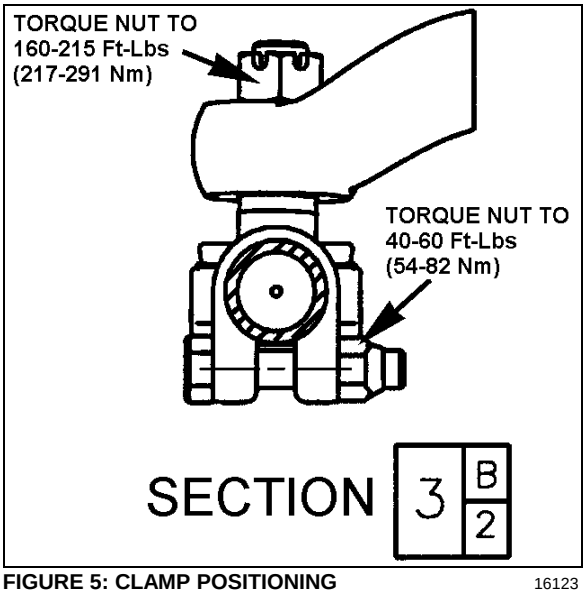

FIGURE 5: CLAMP POSITIONING 16123

2.1 POWER STEERING HYDRAULIC PUMP

Refer to the "TRW Power Steering Pump Service Manual" annexed at the end of Section 14.

2.2 STEERING LINKAGE ADJUSTMENT

NOTE
Whenever a steering linkage component has been removed and replaced, check steering geometry and front end alignment as directed in this Supplement. Check to insure that all stud nuts and mounting bolts and nuts have been tightened to proper torques listed under "16. Torque Table" at the end of this supplement.

1. First, align input shaft marks.
2. Afterwards, the pitman arm should be adjusted with reference mark aligned or to an angle of 90° in relation with the horizontal axis (Fig. 6).
3. Locate centerline of vehicle then install relay rod in boss at steering bell crank and idler arm. Align center of relay rod with centerline of vehicle.
4. Install drag link to pitman arm and adjust opposite end of drag link to fit mounting stud hole in bell crank.
5. Install tie rods, and then adjust toe-in as per "Front End Alignment" in this Supplement.

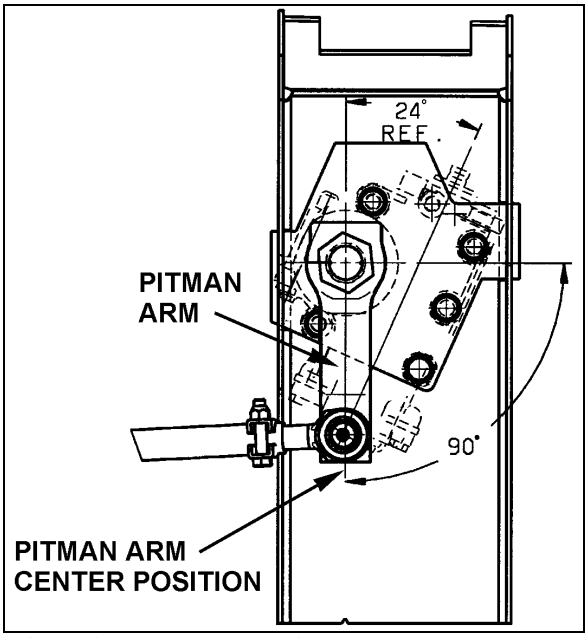

FIGURE 6: PITMAN ARM ALIGNMENT 14037

2.3 PITMAN ARM REMOVAL

1. Remove cotter pin, nut and washer from drag link ball stud at pitman arm.
2. Disconnect drag link from pitman arm, using jaw style pullers (pressure screw type).

⚠ WARNING ⚠

Always wear approved eye protection when operating pullers.

⚠ CAUTION ⚠

Do not drive pitman arm on or off pitman shaft as this can damage the steering gear.

⚠ CAUTION ⚠

Heating of components to aid in disassembly is not allowed because it has a detrimental effect on axle components and steering linkages.

3. Remove pitman arm fixing nut.
4. Check the radial position of the pitman arm in relation to the sector shaft prior to removal of pitman arm.
5. Add reference marks to the arm and shaft if necessary to ensure correct alignment at reassembly.
6. Use a puller to remove pitman arm.

2.4 PITMAN ARM INSTALLATION

1. Position pitman arm on sector gear shaft with reference marks aligned.
2. Install fixing nut. Tighten nut to 400-450 lbf-ft (545-610 Nm).

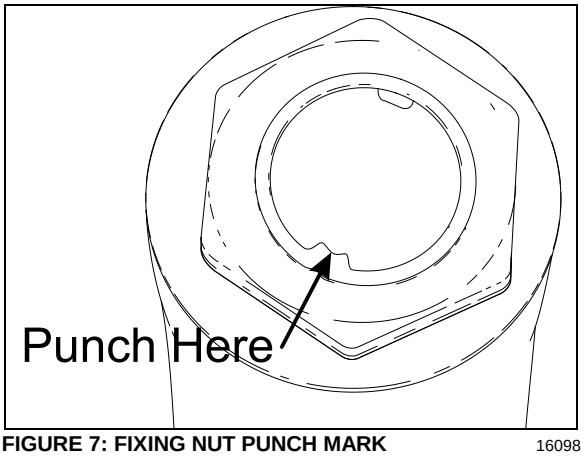

FIGURE 7: FIXING NUT PUNCH MARK 16098

NOTE

Use a new nut if the previously removed nut was punched.

⚠ CAUTION ⚠

Lock nut with sector shaft using a punch mark into the groove (Refer to figure 7).

3. Connect drag link to pitman arm. Install washers. Tighten nut to 160-215 lbf-ft (220-290 Nm). Advance nut to next alignment cotter pin slot and install a new cotter pin.

2.5 DRAG LINK

Drag link assembly consists of three parts; a drag link and two end assemblies. Both end assemblies are identical and they are retained on the drag link with a clamp bolt and nut.

Stud nuts at the pitman arm and bell crank ends of the drag link must be kept tight or hole at ball stud end of drag link and hole in pitman arm may become enlarged as a result of excessive looseness. Subsequent tightening of stud nuts may draw studs too far into holes and dust cover parts may become damaged which can result in component failure.

Drag link end sockets are equipped with lubrication fittings and should be lubricated as directed in "Lubrication Fittings" in this supplement.

2.5.1 Adjustment

It should not be necessary to alter the length of the drag link except when a new link is installed or when removable end assembly has been replaced. If drag link adjustment is necessary, proceed as follows:

1. Position front wheels in straight ahead position.
2. Center steering gear as previously explained in paragraph "2.1 Steering Linkage Adjustment".
3. Remove cotter pin and stud from drag link at bell crank. Locate centerline of vehicle and center of relay rod. With center of relay rod aligned with centerline of vehicle, loosen clamp bolt at socket end (bell crank end) of drag link and adjust length of socket end assembly to fit in boss of bell crank.

NOTE

Do not change position of pitman arm.

4. Install stud nut and torque to 160 lbf-ft (220 Nm). Align nut with cotter pin slot (tighten) and install a new cotter pin.
5. Torque mounting clamp bolt nut to 40-60 lbf-ft (55-80 Nm), then test the adjustment. Front wheels should turn from right to left extremities without noticeable binding at drag link ends.

2.6 BELL CRANK AND IDLER ARM

Bell crank and idler arm are equipped with one lubrication fitting and should be lubricated as directed in paragraph "2.9 Lubrication Fittings" at the end of this Supplement.

2.6.1 Bell Crank and Idler Arm Removal

NOTE
Use a piece of wire to anchor loosen end of relay rod and tie rod in order to prevent placing an excessive load on opposite socket end.

Bell crank: Disconnect drag link, tie rod and relay rod from bell crank by removing cotter pins, stud nuts and washers from ball studs. Separate socket assemblies from the bell crank.

Idler arm: Remove cotter pins, nuts and washers from ball studs connecting relay rod and tie rod to idler arm. Separate socket assemblies from idler arm.

Remove nuts and washers from bolt attaching bell crank or idler arm mounting bracket to vehicle understructure. Remove bell crank or idler arm mounting bracket.

2.6.2 Bell crank or Idler Arm Ball Joint Disassembly

1. Remove adjacent link assemblies from bell crank or idler arm as previously described.
2. Remove the cap (Fig.10).
3. Remove the cotter pin, nut and tongue washer. Remove bearings, grease seal, bearing bushing and the bell crank or idler arm from its mounting bracket stud (Fig. 10).

2.6.3 Bell Crank or Idler Arm Ball Joint Reassembly

NOTE
For bearing installation use tool Prévost # 110684.

1. Install bearing bushing on bell crank or idler arm mounting bracket stud.
2. Install bearing and grease seal in bell crank or idler arm eye (Fig. 10).

NOTE
Install grease seal according to figure 9. Grease must be able to exit the bell crank or idler arm mechanism. For grease seal installation use tool Prévost # 110683.

3. Install bell crank or idler arm on its mounting bracket stud (Fig. 10).
4. Install bearing and nut.

NOTE
Apply grease on bearing before installation.

5. Firmly tighten nut (Fig. 8).

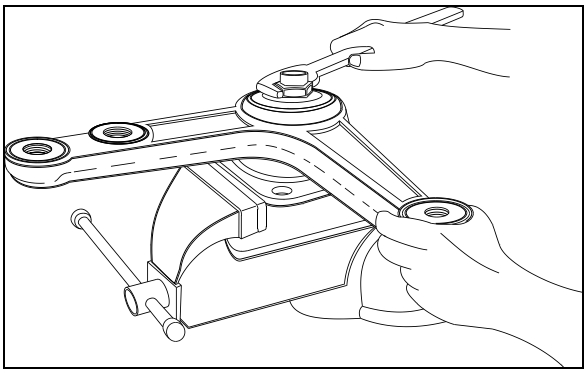

FIGURE 8: BELL CRANK 16044

6. Unscrew nut until bell crank or idler arm starts to turn by the application of 1 to 3 pounds load (Fig. 9).

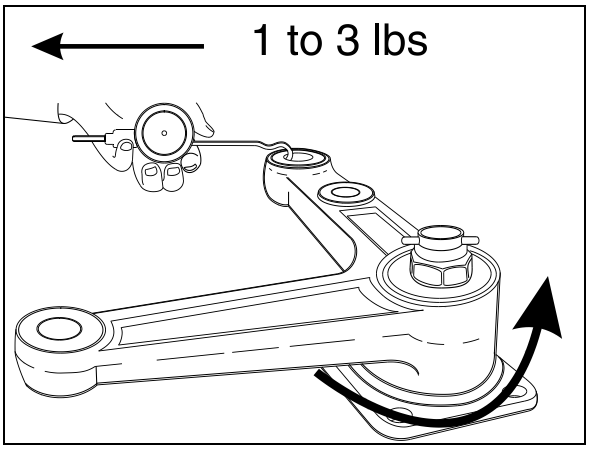

FIGURE 9: BELL CRANK 16045

7. Check for loose bearings by applying an up and down load on bell crank or idler lever (Fig. 10). The lever is not supposed to move in the vertical axis direction.

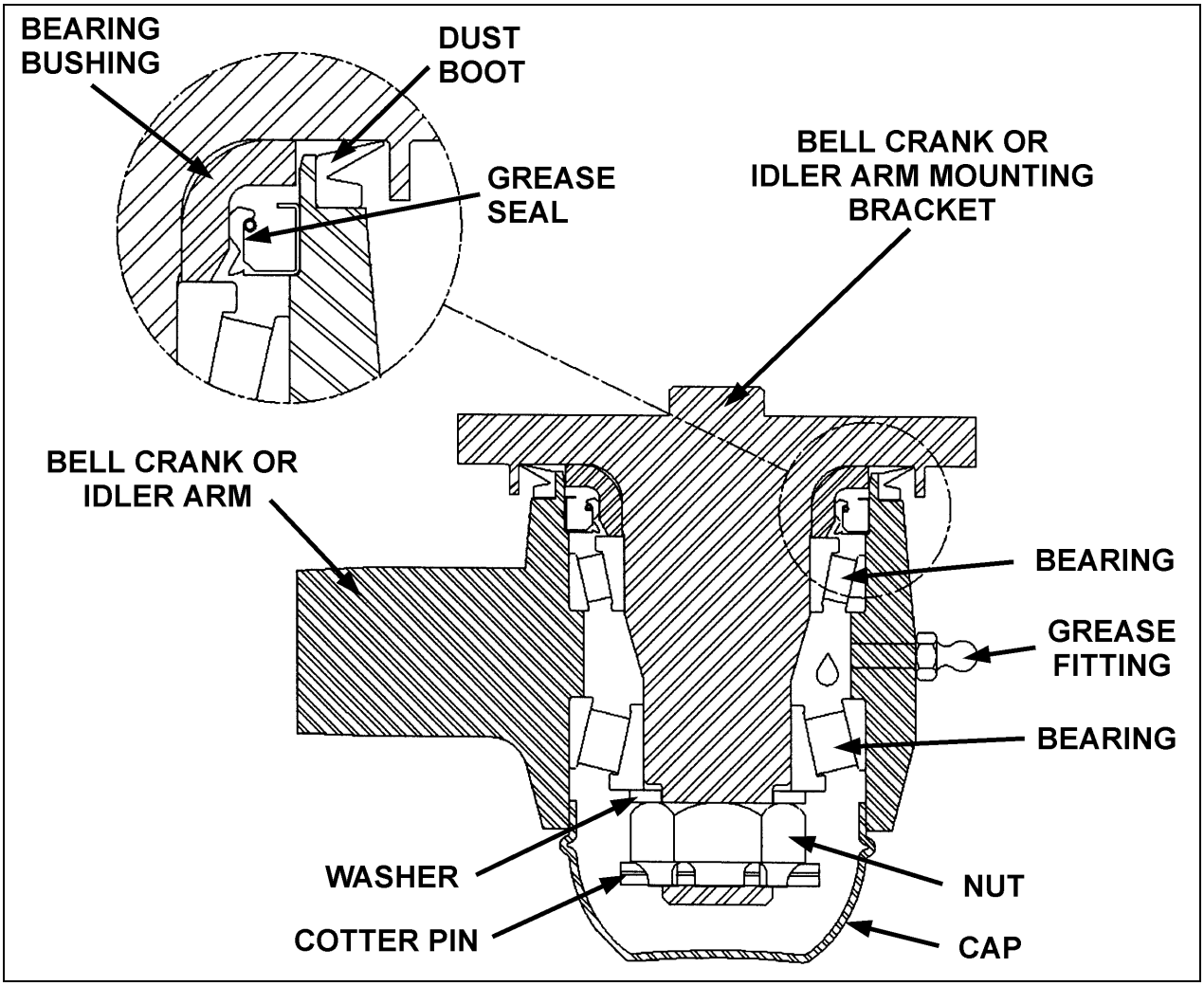

FIGURE 10: BELL CRANK AND IDLER ARM BALL JOINT 16109

8. Align nut with cotter pin slot (tighten) and install a new cotter pin.

NOTE
Bend cotter pin around the nut (Fig. 10). Do not bend the cotter pin in the direction of the cap, because it may interfere with the cap.

9. Install the cap.
10. **Bell crank:** Install drag link, tie rod and relay rod as directed herein under each specific subject.
11. **Idler arm:** Install tie rod and relay rod as directed herein under each specific subject.
12. Adjust turning angle as previously directed under paragraph "**Turning Angle**" and check front end alignment as specified in paragraph "6. Front End Alignment" of this supplement.

2.7 RELAY ROD

Relay rod ends are equipped with lubrication fittings and should be lubricated as directed in paragraph "2.9 Lubrication Fittings" in this supplement.

NOTE
The relay rod is crimped in place and it is not possible to remove the ball joints.

2.7.1 Replacement

1. Remove cotter pins from bell crank and idler arm end of relay rod. Loosen nuts flush with end of studs.
2. Use a puller or place a sledge hammer behind the adjacent part to absorb shocks. Strike the studs with a brass hammer to loosen end assemblies.

3. Remove stud nuts and washers then remove studs.
4. Position relay rod studs into bell crank and idler arm then tap stud ends with a brass hammer to seat tapered surfaces.
5. Install washers and stud nuts. Tighten nuts to 160 lbf-ft (220 Nm) torque. Align cotter pin slot (tighten) and install a new cotter pin.

2.8 TIE RODS

Tie rod ends are connected to the bell crank and left steering arm, and to the idler arm and right steering arm. Each tie rod assembly consists of three parts; a tube and two socket end assemblies. The tie rod ends are threaded into the tube and secured with clamp bolts. Right and left hand threads are provided to ease toe-in adjustment. Tie rod assemblies are interchangeable from the right to the left side of the coach.

Tie rod end sockets require no maintenance other than periodic lubrication and inspection to see that ball studs are tight. Replace socket ends when there is excessive up and down motion, lost motion or end play at ball end of stud.

1. Periodically check bolt nut for tightness.
2. Inspect tie rod for bent condition and inspect tube for damaged threads. If tie rod is bent or threads are damaged, replace the assembly.
3. Lubricate tie rod end fittings as directed in paragraph "2.9 Lubrication Fittings" at the end of this section.

2.8.1 Removal

1. Remove cotter pins and stud nuts which attach tie rod socket ends to bell crank and left steering arm (or idler arm) and right steering arm.
2. Remove tie rod ball stud by tapping on steering arm and bell crank or idler arm with hammer, while using a sledge hammer to absorb shocks.

NOTE
If tie rod end assemblies are damaged in any way, they must be replaced

2.8.2 Installation

1. Install socket end assemblies on tie rod. Be sure both ends are threaded an equal distance into the tube.
2. Make sure threads on stud and in stud nut are clean and not damaged.
3. Position ball studs (socket ends of tie rod) in holes in steering arm and bell crank or idler arm. Install a ball stud nut on each stud and tighten firmly.
4. Torque stud nuts to 160 lbf-ft (220 Nm). Align cotter pin slot (tighten) and install a new cotter pin.

NOTE
Adjust toe-in as directed in paragraph "6.4.2 Toe-In Adjustment" of this supplement.

5. Make sure tie rod ends are properly aligned with ball studs, then torque tie rod end clamp bolts to 40-60 lbf-ft (55-80 Nm).

NOTE
If tie rod is not properly aligned with stud, binding will result.

2.9 STEERING ARMS

The left and right wheel steering arms are secured to a swivel at one end and to a tie rod at the other end.

2.9.1 Removal

1. Remove wheel as directed in Section 13, "Wheel, Hubs And Tires" of the maintenance manual.
2. Remove cotter pin, washer and nut from stud securing tie rod to steering arm. Remove ball stud from steering arm by tapping on arm with a hammer, placing a sledge hammer underneath steering arm to absorb shocks.
3. Remove cotter pin and nut securing steering arm to swivel assembly. Remove steering arm from swivel.

2.9.2 Installation

1. Insert steering arm in swivel.
2. Torque steering arm to swivel nut to 190 lbf-ft (260 Nm). Align cotter pin slot (tighten) and install a new cotter pin.
3. Position tie rod ball stud in steering arm and tap with a brass hammer to seat ball stud in steering arm. Install washer and nut on stud. Torque nut to 160 lbf-ft (220 Nm). Tighten nut to nearest cotter pin slot and install a new cotter pin.
4. Install wheel as directed in Section 13, "Wheel, Hubs And Tires" under paragraph "3.2 Installation" of the maintenance manual.

2.10 LUBRICATION FITTINGS

All lubrication fittings must be clean before applying lubricant. Also, always be sure equipment used in applying lubricant is clean. Every precaution should be taken to prevent entry of dirt, grit, lint or other foreign matter into lubricant containers. Replace fitting when they become broken or damaged.

Intervals of application given in the following paragraphs are recommended for normal service. More frequent intervals may be applied under severe operating conditions. In selecting proper lubricants, supplier reputation must be considered. The supplier must be responsible for product quality. The diagram (Fig. 11) shows approximate location of steering lubrication fittings.

1. **Drag Link Ends:** Lubricate at two fittings, one at each end of link, every 6,250 miles (10 000 km) with good quality lithium-base grease NLGI No. 2 (Shell Retinax LX or equivalent).
2. **Relay Rod Ends:** Lubricate at two fittings, one at each end of rod, every 6,250 miles (10 000 km) with good quality lithium-base grease NLGI No. 2 (Shell Retinax LX or equivalent).
3. **Tie Rod Ends:** Lubricate at four fittings, one at each end of both tie rods, every 6,250 miles (10 000 km) with good quality lithium-base grease NLGI No. 2 (Shell Retinax LX or equivalent).
4. **Swivel Assembly:** Refer to DANA SPICER MAINTENANCE MANUAL NDS AXLES Lubrication and Maintenance" annexed at the end of section 10.
5. **Idler Arm and Crank bell:** Lubricate at two fittings, one on the idler arm and the other on the crank bell, every 6,250 miles (10 000 km) with good quality lithium-base grease NLGI No. 2 (Shell Retinax LX or equivalent). Apply grease gun pressure to the fitting until lubricant appears at the top seal.
6. **Upper V-Link Outer Ball Joint:** Lubricate at fitting until you see some grease on the relief valve nearby, every 6,250 miles (10 000 km) with good quality lithium-base grease NLGI No. 2 (Shell Retinax LX or equivalent).

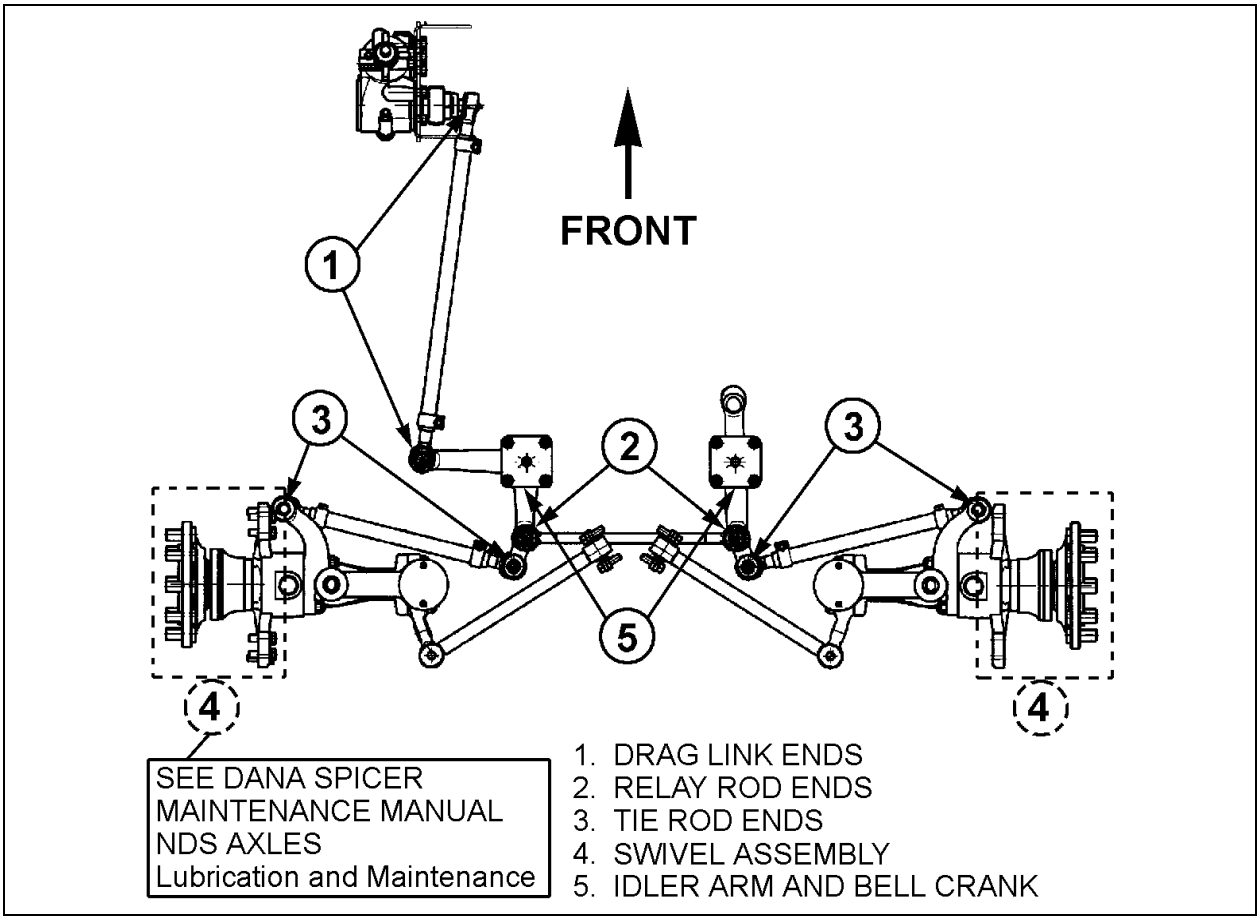

FIGURE 11: LUBRICATION FITTINGS' LOCATION DIAGRAM 16119

3. BALL JOINTS

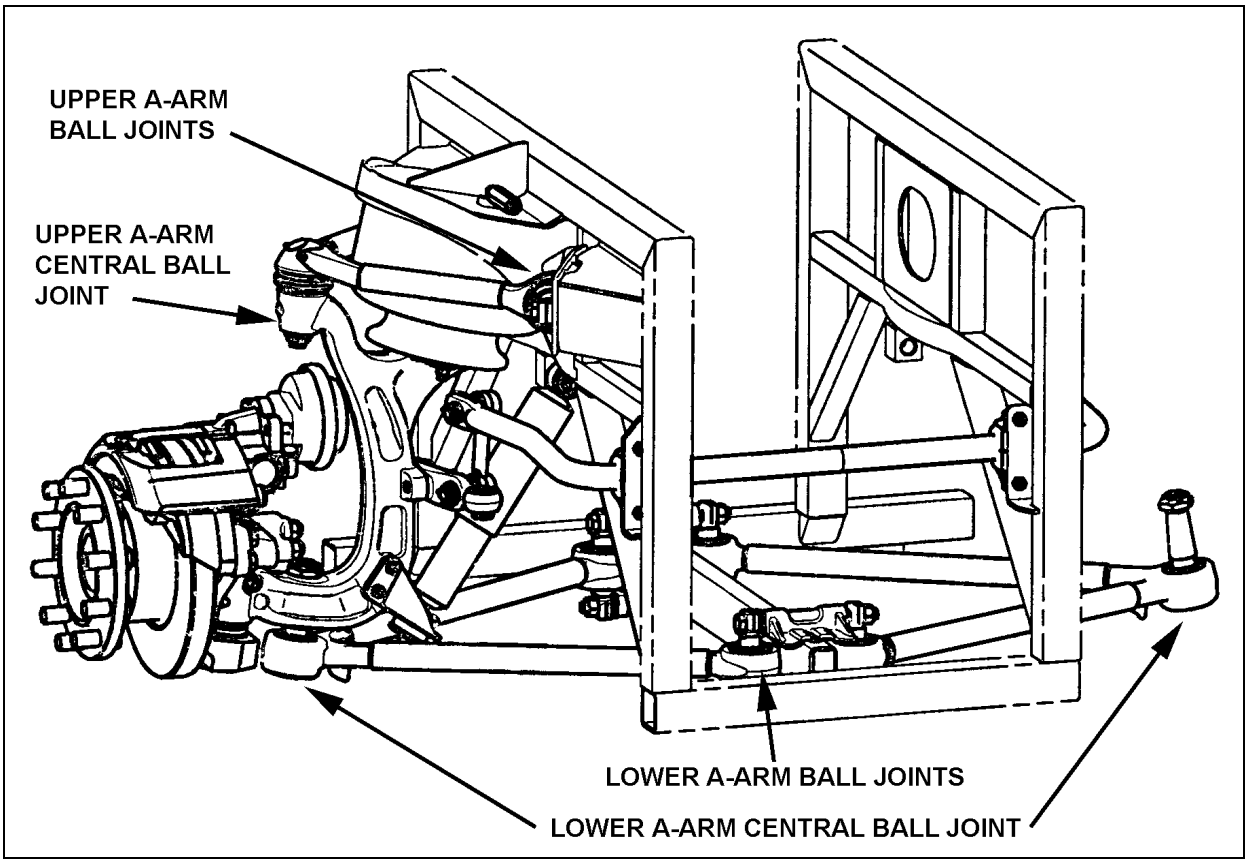

FIGURE 12: BALL JOINTS LOCATION 16137

4. LOWER AND UPPER A-ARM BALL JOINT

The assembly work may be done only by a recognized specialized workshop. Ensure that old and new parts do not get mixed up with each other. It is for this reason that all the old parts are to be scrapped immediately after a joint has been stripped down. A complete repair set must be used for each joint repaired, i.e. use of only part of a repair set is not permissible.

4.1 INSPECTION

Take off the load from the ball joint by lifting the front of the vehicle. Apply a load on the joint in all of the degrees of freedom in an axial, radial, etc. sense with a suitable lever tool. After the load is taken off, the joint has to spring back into its starting position. Free play is not acceptable.

Separation of rubber from ball pin or external joint shell is in accordance with "normal wear characteristics".

When the following characteristics are noted, the joint is to be changed:

- Free play;
- Radial cracking of the external sheet-metal race.

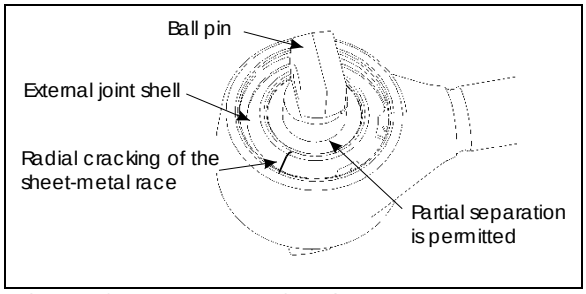

FIGURE 13: A-ARM BALL JOINTS

4.2 STRIPPING DOWN

Strip down the defective joint through removal of retaining ring, annular spacer and ball pin/bushing, assembly and thereafter clean out housing bore and locking circlips groove.

4.3 ASSEMBLY

Execute assembly of the new joint parts in the following sequence:

1. Complete moistening of the contact surface between housing bore and ball pin through application of the grease.

NOTE
Apply grease, only in the case of repair kit (Prévost # 611114)).

2. Insert ball pin/bushing, assembly. In case of the two-bolt type, ensure that the bolt bores are in the correct position in relation to the axis of the tube.
3. Place joint in receiving fixture and mount annular assembly tool on the housing. Then locate annular spacer and retaining ring in the housing using axial load with the aid of assembly matrix. If the ends of the annular spacer are not in contact with each other, the thus formed opening must be located at 180° to the opening of the retaining ring. Pay attention during assembly to ensure that the retaining ring eyelets are located at each side of the housing shaft axis (retaining ring eyelet lug points to tube), and that retaining ring is properly engaged in the groove of the housing.
4. When repairing defective ball pin assemblies, the necked down-bolt must regularly be replaced with a new one.

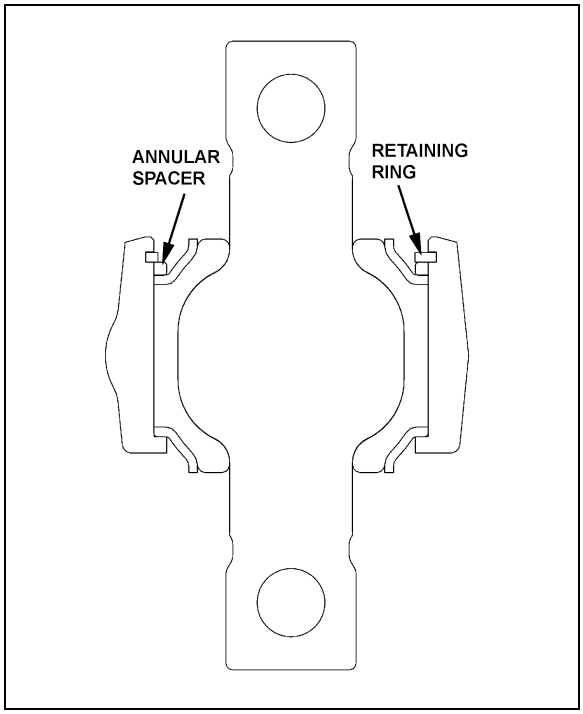

FIGURE 14: LOWER A-ARM BALL JOINTS 16114

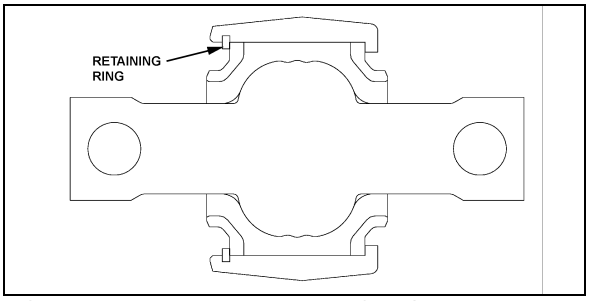

FIGURE 15: UPPER A-ARM BALL JOINTS 16115

5. LOWER A- ARM CENTRAL BALL JOINT

5.1 INSPECTION

Take off the load from the ball joint by lifting the front of the vehicle. Apply a load on the joint in all of the degrees of freedom in an axial, radial, etc. sense with a suitable lever tool. After the load is taken off, the joint has to spring back into its starting position. Free play is not acceptable.

Separation of rubber from ball pin or external joint bushing shell is in accordance with "normal wear characteristics".

When the following characteristics are noted, the joint is to be changed:

- Free play;
- Radial cracking of the external bushing shell.

5.2 STRIPPING DOWN

Strip down the defective joint through removal of retaining ring, annular spacer and ball pin/bushing, assembly and thereafter clean out housing bore and locking circlips groove.

5.3 ASSEMBLY

Assemble the new component parts of the joint in the following sequence:

1. Complete moistening of the contact surface between housing bore and ball pin through application of the grease.
2. Place joint in receiving fixture and mount annular assembly tool on the housing. Then locate annular spacer and retaining ring in the housing using axial load with the aid of assembly matrix. If the ends of the annular spacer are not in contact with each other, the thus formed opening must be located at 180° to the opening of the retaining ring. Pay attention during assembly to ensure that the retaining ring eyelets are located at each side of the housing shaft axis (retaining ring eyelet lug points to tube), and that retaining ring is properly engaged in the groove of the housing.

3. Faultlessly apply grease by mechanical means to bracket-outer core and ball-inner cone. Insert bracket outer cone in fixture with distance ring and then use press tool to apply pressure to press mount with ball-inner cone.

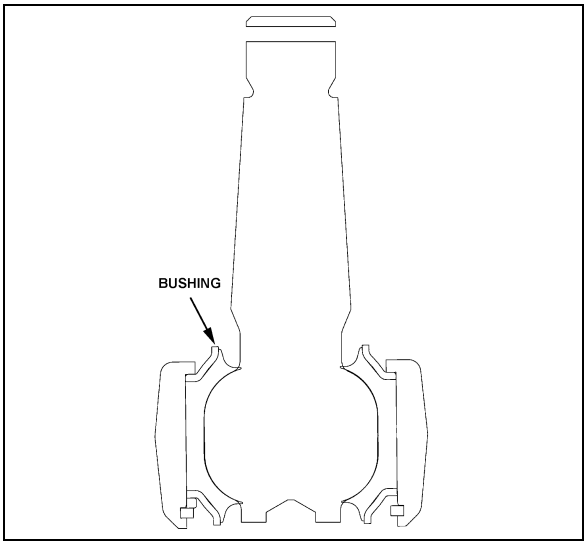

FIGURE 16: LOWER A-ARM CENTRAL BALL JOINT 16113

6. UPPER A-ARM CENTRAL BALL JOINT

6.1 VISUAL INSPECTION

Check the condition of the sealing boot, in particular:

Check if the retainer ring, which secures the sealing boot at the conical section of the ball stud, is still present.

Check if grease is present on the external surface of the sealing boots. Escaped fluid and accumulations of grease on the sealing boot may be the result of the sealing boot's rupturing. In this case, the ball joint must be systematically replaced.

6.2 PLAY MEASUREMENT

1. Raise the vehicle and support through axle jacking points.
2. Using a caliper, measure dimension A on figure 17.
3. With a lever tool, exert sufficient force under the upper A-arm as to separate the upper A-arm from the upright in order to have the ball joint to its maximum extent. Remeasure the dimension A. If the difference between the two dimensions is greater than 0.060" (1.5mm), then the ball joint should be replaced.

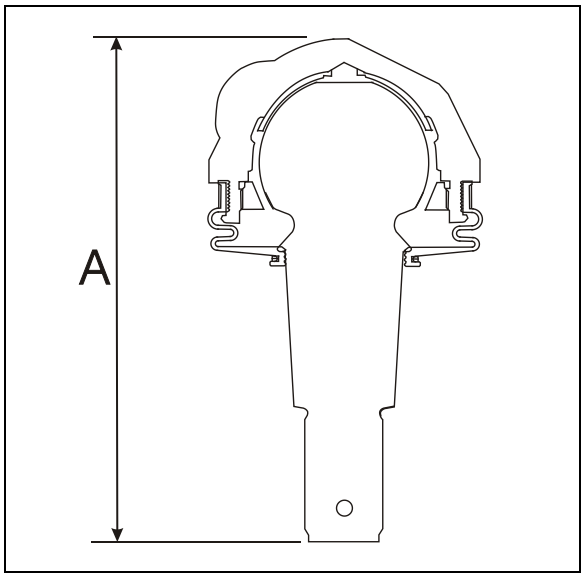

FIGURE 17: UPPER A-ARM CENTRAL BALL JOINT 16116

7. FRONT END ALIGNMENT

Proper front end alignment must be maintained to insure ease of steering and provide satisfactory tire life. When making front end alignment inspections, the vehicle must be level and empty with the full weight of the vehicle on the wheels.

Front end alignment inspections fall into two groups: regular service inspections performed at periodic intervals, and inspections to determine the extent of damage after a collision or severe service.

Regular service inspections concern toe-in, camber and caster.

Any variation from the specified alignment will indicate either a need for adjustment or a more thorough inspection to determine if parts replacement is required.

⚠ WARNING ⚠

During alignment, both camber and caster among other angles are adjusted. When adjusting these we install or remove shims from the lower "A" arms of the ISS suspension. After performing alignment, make sure that the following is done:

- **Installing a new lock nut after all shims are finalized.**
- **Torque replaced nuts as per figure 21.**
- **Installing a longer bolt if less the 2 threads are remaining after the nut.**
- **Using a Torque mark on the nut for future visual inspection.**

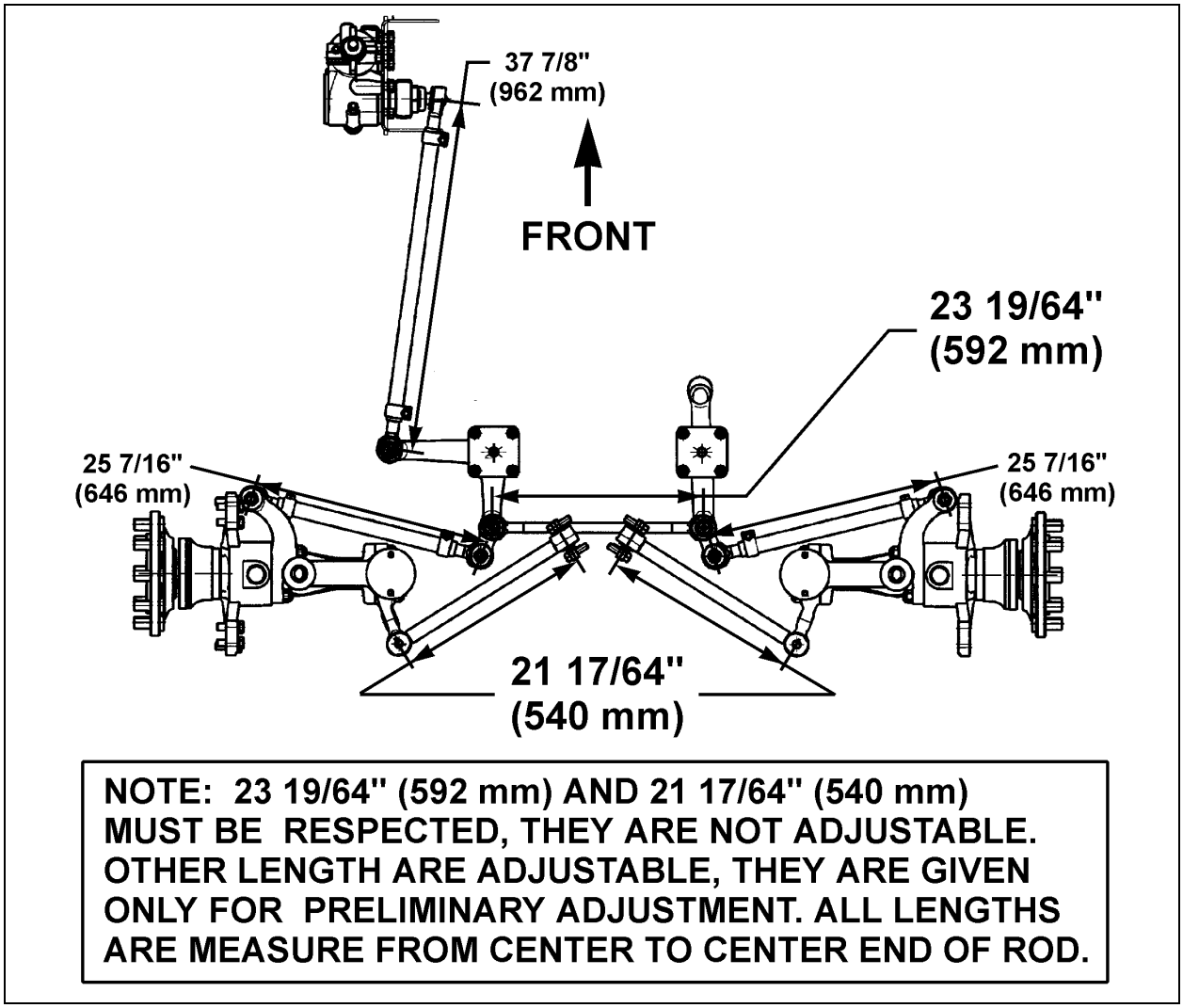

FIGURE 18: STEERING LINKAGE MEASURE 16130

7.1 ALIGNMENT TERMINOLOGY

Wheel Camber

The amount the wheels are inclined from the vertical plane (A, Fig. 18).

Wheel Toe-In

The distance the front wheels are closer together at the front than at the rear of the tires (D minus E, Fig. 18).

King Pin Inclination

The inclination of the king pin from vertical toward the center of the vehicle at the top and outward at the bottom (B, Fig. 18).

Front Axle Caster

The inclination of the king pin from vertical in the fore and aft direction (C, Fig. 18).

7.2 FRONT END INSPECTION

Before checking front end alignment, make the following inspection:

1. Check that the vehicle is at normal ride height (see paragraph "11. Suspension Height Adjustment").
2. Check the tires for proper inflation.
3. Check wheel installation and run-out.
4. Check wheel bearing adjustment.
5. Check tie rods and drag link ends for looseness.
6. Check king pins for looseness.
7. Check if the length of the torque rod is 21 17/64" (540 mm) (Fig. 18). Check if the length of the relay rod is 23 19/64" (592 mm).

7.3 FRONT WHEEL CAMBER

Positive camber is the outward inclination of the wheels at the top, negative or reverse camber is the inward inclination of the wheels at the top. Camber variations may be caused by wear at the wheel bearings, wheel spindle bushings, or bent suspension parts.

Check camber, with an accurate gauge. If camber is incorrect, check suspension parts for wear and replace worn parts. If wear is not perceptible, suspension parts may be bent or lower suspension arm may be improperly shimmed.

Check King pin inclination. If King pin inclination is incorrect, readjust the camber and check king pin inclination again.

NOTE
Camber is more important than king pin inclination, so adjust camber and verify king pin inclination.

Shim the lower suspension arm to adjust camber. If the king pin inclination is incorrect, the wheel king pin assembly may be bent and therefore should be replaced.

Excessive positive camber results in irregular wear of the tires at the outer shoulders. Negative or reverse camber causes wear at the inner shoulders.

NOTE
Shim only the lower suspension arm to adjust the front wheel camber.

⚠ CAUTION ⚠
Once the perfect shim combination is achieved, always install new stover nuts because the self looking effect is lost after tightening and loosening of the nut. It is recommended to punch marks to detect loosening of the nuts during future visual inspections.

7.4 FRONT WHEEL TOE-IN

Toe-in is measured from the center of the tire treads. Measurements at the front and rear of the tires must be made at the same height from the floor. Incorrect toe-in results in excessive tire wear and steering instability with a tendency to wander.

7.4.1 Toe-In Check

1. Check the camber adjustment and adjust if necessary.
2. Hoist the front of the vehicle and spin the wheels marking the centerline of the tire treads.
3. Place the wheels in the straight ahead position and lower the vehicle to rest on the floor.
4. Roll the vehicle ahead several feet. This removes any slack caused by looseness in the wheel bearings or steering connections.
5. Check the distance between the tire centerlines at the front and rear of the front tires. These two measurements must be made at the same height above the floor. The front measurement must be 3/32 ±1/32 of an inch less than the rear measurement.

7.4.2 Toe-In Adjustment

1. Loosen the tie rod clamp bolts.
2. Using a pipe wrench, turn the tie rod tubes to obtain the toe-in measurement specified in step 5 under paragraph "6.4.1 Toe-in Check" of this Supplement.
3. Tighten the tie rod clamp bolts and recheck toe-in.
4. Check that the angular relationship of the pitman arm to the steering gear is as shown in figure 6.

NOTE
Use only tie rods to adjust toe-in.

7.5 FRONT AXLE CASTER

Positive caster is the inclination of the top of the king pins toward the rear of the vehicle. Negative or reverse caster is the inclination of the king pins toward the front of the vehicle. This vehicle is designed with positive caster. The purpose of caster is to provide steering stability by keeping the wheels in a straight ahead position.

Caster variations may be caused by bent upper suspension arm, lower suspension arm, or king pin housing. Caster should be adjusted with shims. Precision instruments should be used to measure caster. Shim bell crank and idler arm to adjust caster.

Variations from the specified caster will affect steering stability, cause wandering, wheel shimmy, and reduce returnability when pulling out of curves.

7.6 MAJOR DAMAGE

If the suspension has sustained major damage, it may be necessary to shim the bell crank and the idler arm to avoid the bump steer or roll steer. Moreover refer to paragraph "7: Front End Alignment".

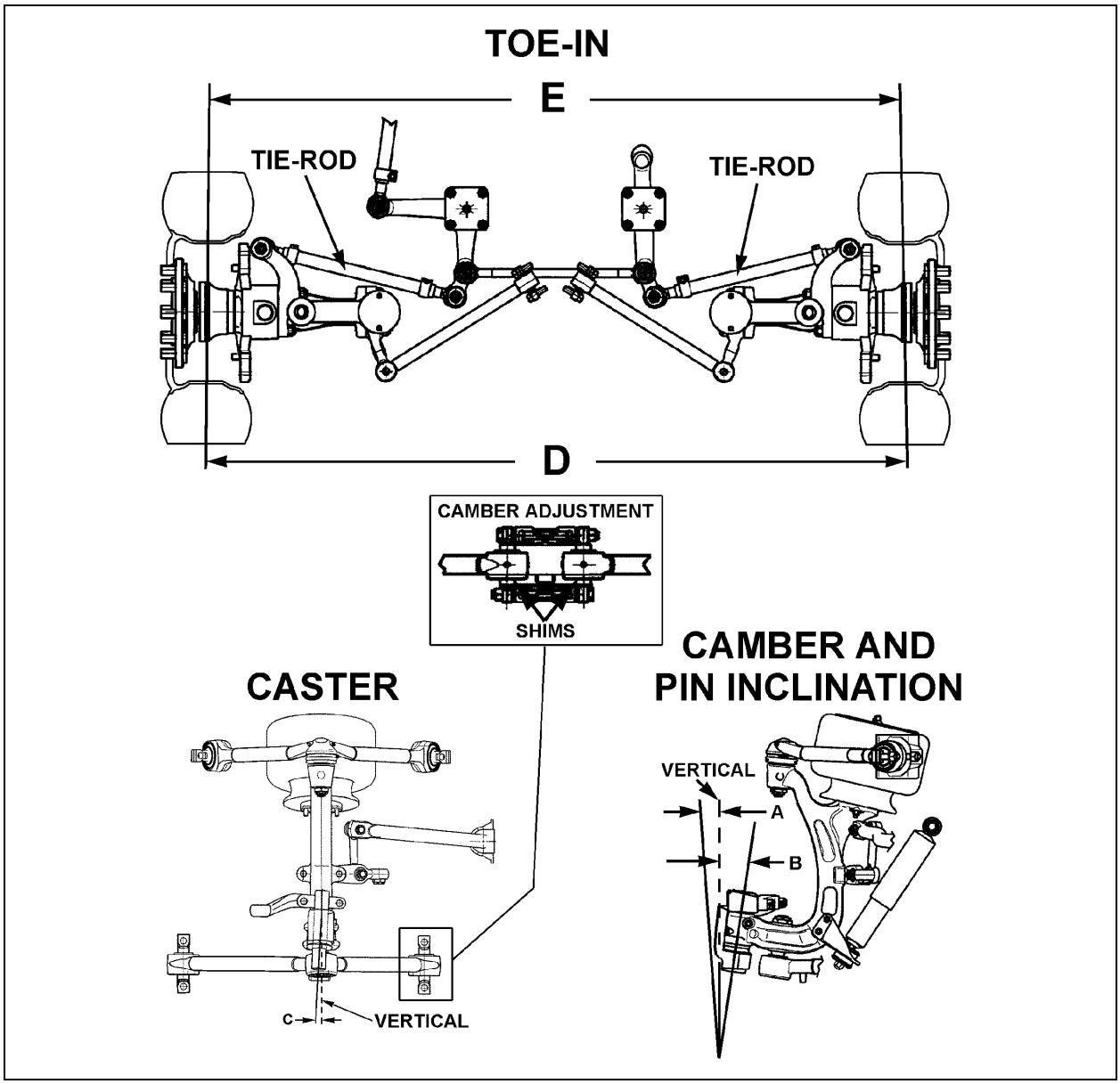

FIGURE 19: FRONT END ALIGNMENT DIAGRAM 16134

ALIGNMENT SPECS (See Figure 19)				
		Minimal	Nominal	Maximal
A	WHEEL CAMBER	0.0	0.150	0.35
B	KING PIN INCLINATION	8° (not adjustable)		
C	CASTER	2.35	2.6	2.85
D-E	TOE-IN	0.08	0.13	0.17

8. FRONT AIR SPRINGS

Two *"rolling lobe"* type air springs are used with the independent front suspension, one at each wheel. These air springs are special and use the complete piston as an extra reservoir to lower the spring stiffness. Front air springs are attached to the subframe and to uprights.

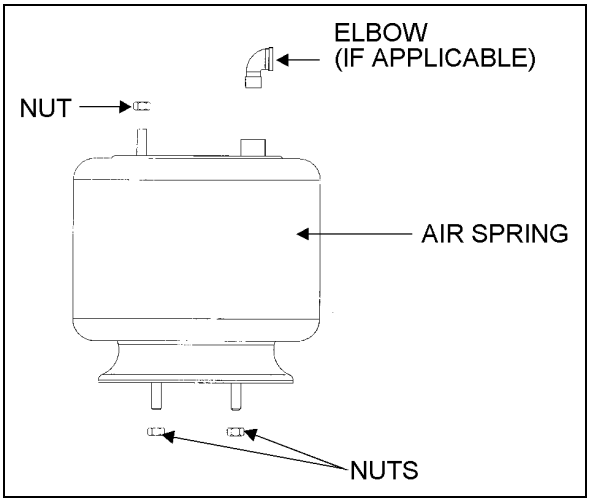

FIGURE 20: AIR SPRINGS 16052

8.1 INSPECTION

1. Check operation of bellows.
2. Visually inspect bellows for evidence of cracks, punctures, deterioration, or chafing. Replace the bellows if damage is evident.
3. With the primary air system at normal operating pressure (95 - 125 psi (655 - 860 kPa)), coat all suspension air line connections and bellow mounting areas with a water and soap solution. Bubbles will indicate an air leak, and none is permissible. Repair or replace defective parts.

NOTE
If air spring is removed from vehicle, bellows can be lightly inflated and submerged in water to detect any leakage. If leakage is detected, replace bellows.

⚠ WARNING ⚠
To prevent personal injury, do not apply more than 10 psi (69 kPa) air pressure to the unmounted air spring.

8.2 REMOVAL

NOTE
Front air springs can be removed without removing the entire suspension assembly.

1. Safely support vehicle at the recommended body jacking points and jack up body understructure.
2. To gain access to a given air spring, the corresponding wheel can be removed.

⚠ CAUTION ⚠
Only the recommended jacking points must be used as outlined in Section 18, "Body" in the maintenance manual.

3. Support the assembly with a suitable jack.
4. Exhaust compressed air from accessory air tank by opening drain cock under reservoir.
5. Disconnect the height control valve link and pull down the overtravel lever to ensure all air is exhausted from air springs.

NOTE
While performing this step, do not change the height control valve overtravel lever adjustment.

6. Disconnect air line from air spring, remove elbow (if applicable), and cover both the line end and fitting to prevent the entry of foreign matter.
7. Remove the air spring upper nut, and then the two lower nuts. Remove air spring and remove the back up plate from the top of the air spring.

8.3 INSTALLATION

NOTE
To facilitate air spring installation, compress it manually then put a piece of tape over the air line threaded fitting. This prevents air from getting back into the bag and keeps it compressed, thus enabling to place the bag in between the mounting plates and greatly easing installation.

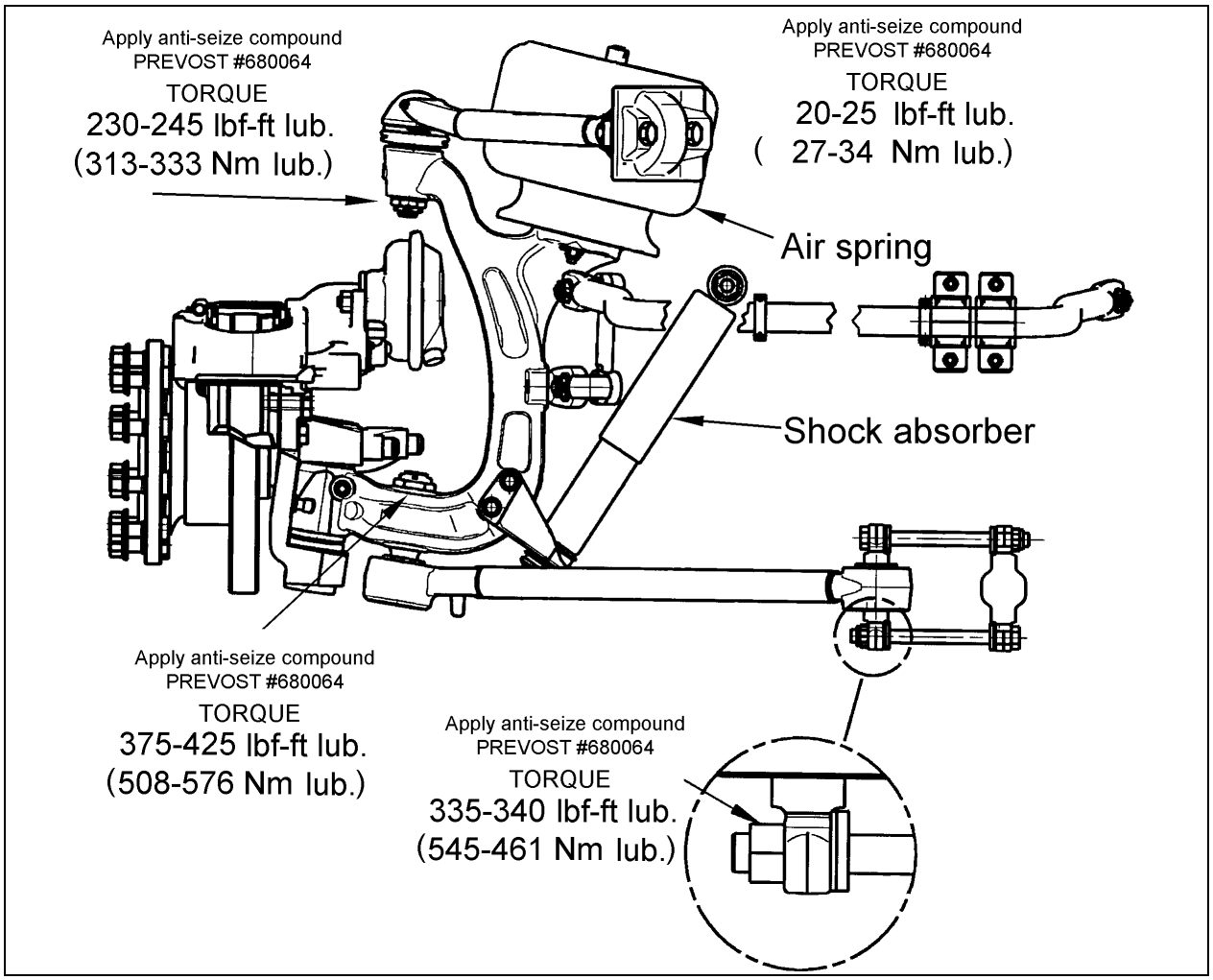

FIGURE 21: AIR SPRING AND SHOCK ABSORBER 16145

1. Compress air spring as necessary, then aligning studs with their holes, position air spring between both the lower and upper supports. Thread the lower nuts and the small upper nut a few turns.
2. Tighten and torque the lower stud nuts, and then the upper nut to 20-25 lbf-ft (27–34 Nm).
3. Install elbow (if applicable), then connect air line.
4. Connect the height control valve link.
5. Build up air pressure in system.

NOTE
To accelerate this operation, air reservoirs can be filled from an exterior air supply connected to the accessory tank fill valve or to the emergency fill valve.

6. Check operation of bellows and with the primary air system at normal operating pressure (95 - 125 psi (655 - 860 kPa), coat the air line connections and air spring mounting areas with a water and soap solution. Bubbles will indicate an air leak, and none is permissible. Repair or replace defective parts.
7. Remove the hydraulic floor jack from underneath shock absorber bracket.

9. SHOCK ABSORBERS

The two front shock absorbers are double-acting and telescopic type. Shock absorbers ensure a smooth ride and enhance vehicle stability on the road. Front shock absorbers have eye-type mountings on the upper side and bayonet type on lower side. Shock absorbers are non-adjustable and non-repairable.

⚠ CAUTION ⚠

When a shock absorber is found defective, always replace with a new set on affected axle, except if there has been a recent replacement of one unit. The following method will help in determining if both shock absorbers on the same axle have to be replaced.

9.1 SHOCK ABSORBER REMOVAL

1. Remove the nut, washer and rubber joint from shock absorber mounting stud. Discard the rubber joints.
2. Remove the nut and washer from shock absorber mounting pin (upper side), taking care to identify the inner and outer washers to ease reinstallation. Refer to figure 22 for details.
3. Remove the shock absorber from the vehicle.
4. Remove inner: washers, rubber joint and bushings from the shock absorber. Discard bushings and rubber joint.

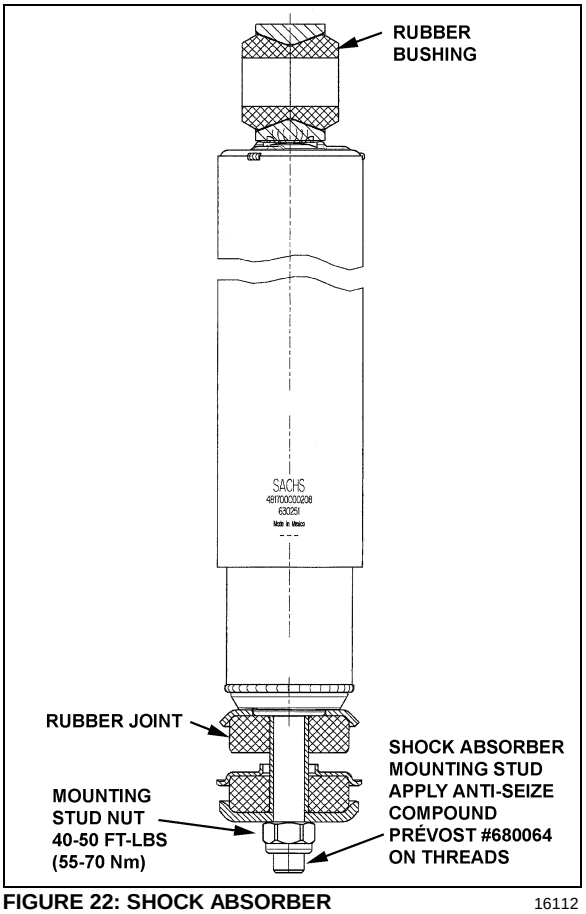

FIGURE 22: SHOCK ABSORBER 16112

9.2 SHOCK ABSORBER INSTALLATION

1. Check that the shock absorber mounting pin torque is proper (350-400 lbf-ft (475-545 Nm)). Ensure that the stud is clean and not stripped (upper side).
2. Install new rubber (mounting) bushing on shock absorber (upper side).
3. Place the inner washer on shock absorber pin (Fig. 22).
4. Install washer and rubber joint on shock absorber mounting stud (lower side).
5. Install the shock absorber as shown in figure 18 with the mounting stud protruding through the hole in the mounting bracket and the shock absorber eyes over the mounting pins. Install the outer washer.
6. Place a rubber joint and washer on the shock absorber mounting stud. Place the lower shock absorber mounting stud nut and torque to 40-50 lbf-ft (55–70 Nm).
7. Place the upper mounting pin stud nut and torque to 70-85 lbf-ft (95–115 Nm).

10. SWAY BAR

A sway bar is provided on the front and drive axles to increase vehicle stability. It controls lateral motion (swaying movement) of vehicle.

10.1 REMOVAL

1. Disconnect the two links from sway bar.
2. Safely support the sway bar. Unbolt bushing collars from subframe.
3. Remove sway bar.

NOTE

Sway bar bushings are slit to ease their removal.

10.2 INSTALLATION

1. Loosely install the sway bar.
2. Torque bushing collar nuts to 60 lbf-ft (82 Nm).
3. Torque sway bar link upper nuts to 120-140 lbf-ft (163-190 Nm) on front suspension and to 100-120 lbf-ft (136-163 Nm) on rear suspension.
4. Torque sway bar link lower nuts to 120-140 lbf-ft (163-190 Nm) on front suspension and to 70-80 lbf-ft (95-110 Nm) on rear suspension.

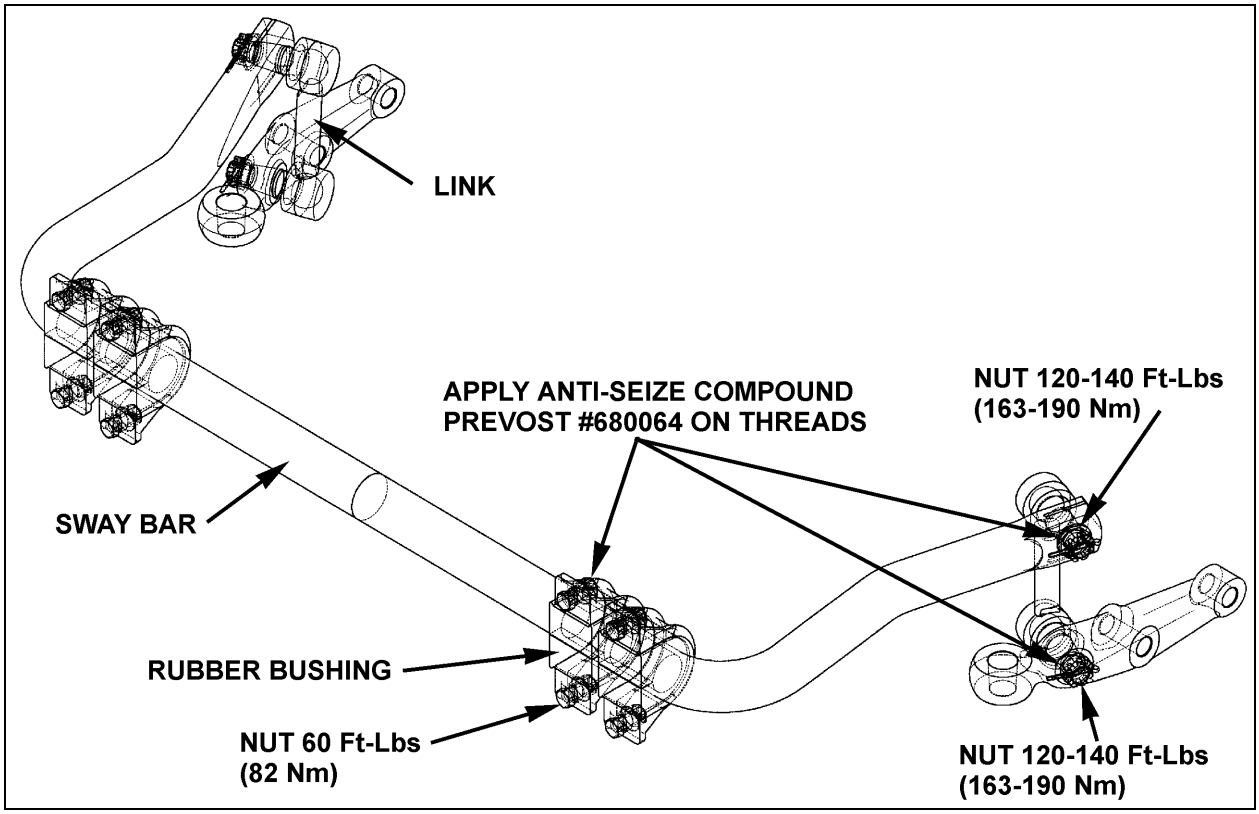

FIGURE 23: SWAY BAR (FRONT SUSPENSION) 16055

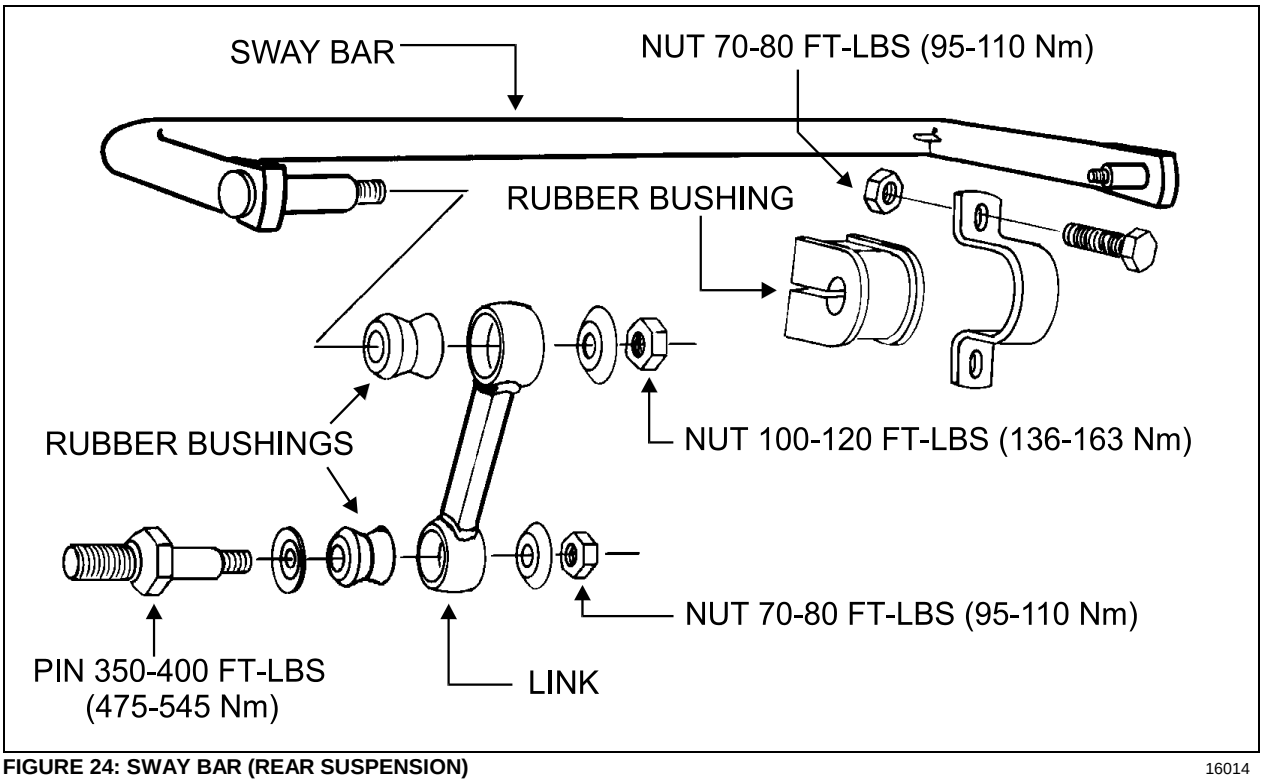

FIGURE 24: SWAY BAR (REAR SUSPENSION) 16014

11. SUSPENSION HEIGHT ADJUSTMENT

The flow of pressurized air from the accessory air tank to the air springs is controlled by three height control valves. The two rear valves are mounted to the subframe and connected to the rear axles through an arm and link connection. The front valve is mounted to the subframe and connected to the front air tank support. These connections allow the valves to apportion air pressure in the springs to the vehicle load, maintaining normal ride height.

Immediate response height control valves increase or decrease the air pressure in the suspension system as required. One height control valve is located **at center of front sway bar**, and regulates air to front suspension air springs in order to maintain the vehicle at the required height. Two are located at the drive axle, one on each inner side of rear wheelhousing.

The appropriate vehicle body height is obtained by measuring the clearance of all the air springs installed on the vehicle. The two front air springs clearance should be 11 ± ¼“ (279 ± 6 mm). Refer to figure 25 to identify the correct area to take measurement. The rear air springs clearance should be 11 ½ ± ¼" (292 ± 6 mm) (refer to Maintenance Manual, Section 16, under "Suspension Height Adjustment" for rear height control valves' adjustment).

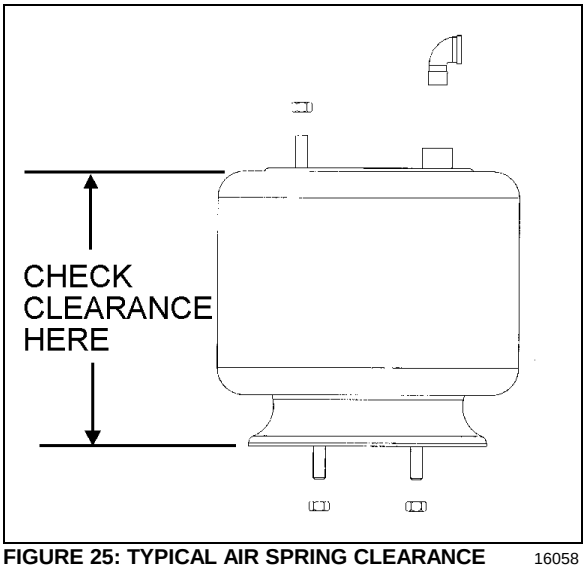

FIGURE 25: TYPICAL AIR SPRING CLEARANCE 16058

At this point, it should not be necessary to make an adjustment under normal service conditions. However, if an adjustment is required, change the position of the overtravel lever in relation to the overtravel control body. The lever should be moved up to raise vehicle height, and down to lower it. Check that main air pressure is at normal operating pressure and raise the vehicle to the specified height.

⚠ CAUTION ⚠

Always adjust on "fill cycle". If it is necessary to lower vehicle height, release sufficient air to be well below height, and adjust to height or fill cycle.

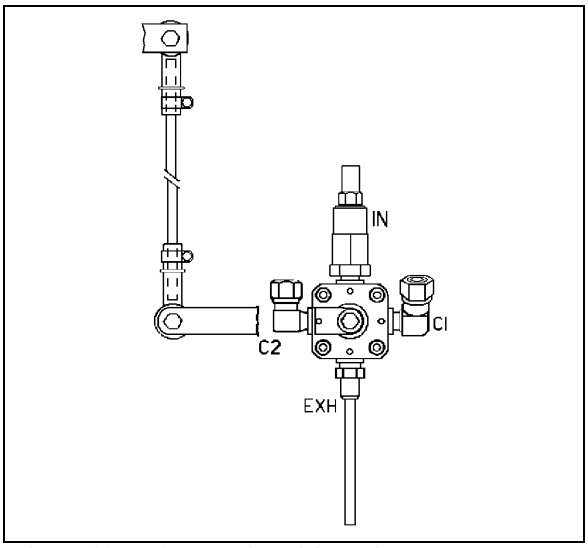

FIGURE 26: FRONT HEIGHT CONTROL VALVE 16100

The normal ride height is obtained by adjusting air spring clearance of both front and rear suspension as follows:

Front air spring clearance

1. With the vehicle at normal operating air pressure [100 - 125 psi (689 - 860 kPa)], measure air spring clearance. This clearance should be 11 ± ¼“ (279 ± 6 mm).

NOTE

The measurement should be taken from underneath the upper air spring support on subframe to top of the lower air spring support on axle (refer to figure 25 for more details). If adjustment is required, begin with the drive axle.

2. Loosen the clamp on the height control valve rubber coupling and bring it up or down (Fig. 26).

NOTE

Allow suspension to stabilize before taking reading.

When the desired height is obtained, tighten clamp.

Rear air springs clearance

Refer to XL2 Maintenance Manual, Section 16, under "Suspension Height Adjustment".

12. HEIGHT CONTROL VALVE

The height control valves automatically add air to, or release air from air springs to maintain constant suspension height regardless of load, or load distribution. Each valve adjusts independently according to the following conditions:

12.1 LOADING POSITION

As the load increases and lowers the vehicle body, the overtravel lever commands the height control valve to add air to air springs.

12.2 NEUTRAL POSITION

When vehicle body reaches the normal ride height, the height control valve overtravel lever reaches the "neutral" position and keeps both the supply and exhaust ports closed to ensure normal ride height is maintained. This condition remains static until the vehicle load is altered.

12.3 UNLOADING POSITION

As the load decreases and raises the vehicle body, the overtravel lever commands the height control valve to release air from air springs.

12.4 MAINTENANCE

The height control valve requires no periodic maintenance. Height control valve linkage operates on rubber bushings and no lubrication should be attempted at this location. Inspect the valve for loose joints, air leaks and worn bushings.

12.5 REMOVAL AND INSTALLATION

Before disconnecting a height control valve air line, securely support the vehicle by its jacking points on the body, and place safety supports underneath body. Refer to paragraph *"16. Vehicle Jacking Points"* in Section 18, *"Body"*.

1. Exhaust air from air system by opening all air tank drain cocks. Remove height control valves.
2. Disconnect overtravel lever from link and pull down lever to exhaust remaining air from air springs.
3. Disconnect air supply and delivery lines from the height control valve. Cover line ends with tape to prevent entry of foreign matter.
4. Remove the nuts retaining the height control valve to the mounting bracket, then remove valve assembly.

Reverse removal procedure to replace height control valve. After installation, check for leakage using a soap and water solution.

13. AIR SYSTEM

The basic air system consists of an air compressor, tanks, valves, filters and interconnecting lines and hoses (refer to Section 12, "Brake and Air System" for complete information). It provides a means for braking, operating controls and accessories, and suspension. An air system schematic diagram is annexed at the end of this supplement for better understanding of the system.

The air coming from the air dryer is first directed to the wet air tank, then to the primary (for the primary brake system), secondary (for the secondary brake system), and accessory (for the pneumatic accessories) air tanks (Fig. 27).

In addition, an expansion air tank is installed in series with each air spring.

13.1 AIR TANK MAINTENANCE

Ensure that the accessory air tank is purged during pre-starting inspection. A good practice is to purge this tank at the end of every driving day by the remote air tank drain valve located in the steering compartment (Fig. 29).

Moreover, purge all tanks by their bottom drain valves at specified intervals.

13.1.1 Wet Air Tank

This tank is installed above L.H. wheel of drive axle, and is provided with a bottom drain valve. It is recommended to **purge** the wet air tank by its bottom drain valve every 12,500 miles (20 000 km), or once a year, whichever comes first.

A remote valve located in engine compartment and accessible through engine R.H. side door is used to **drain** the air dryer (Fig. 28).

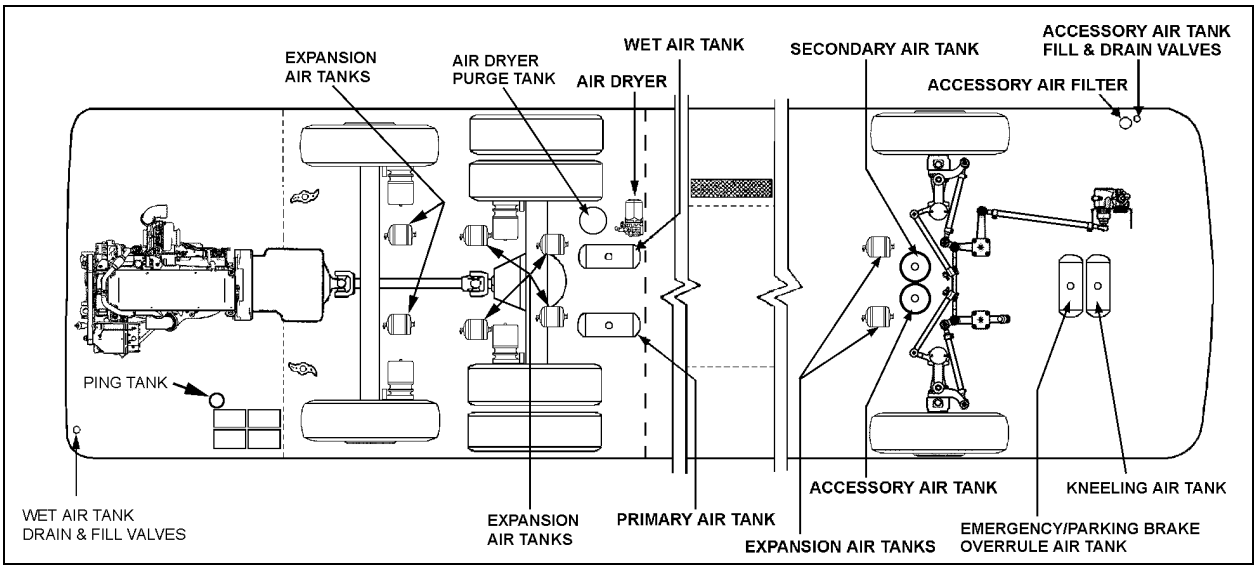

FIGURE 27: LOCATION OF AIR TANKS 24007C

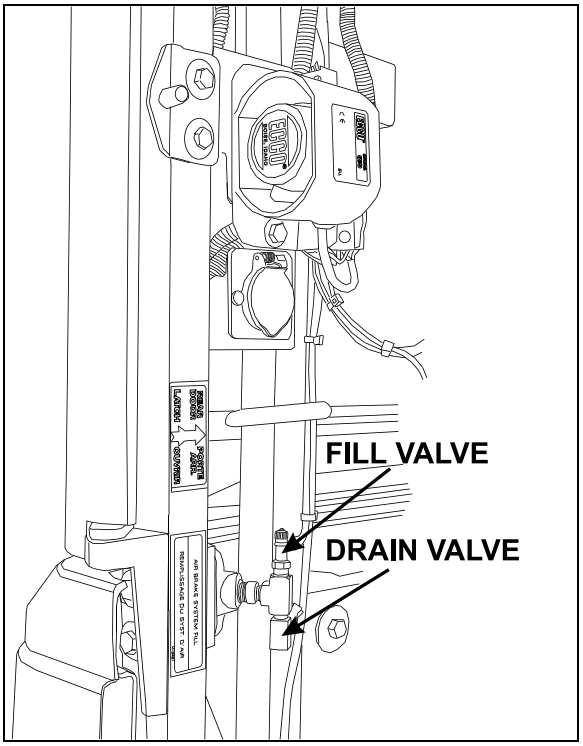

FIGURE 28: REAR VALVE LOCATION 12202

13.1.2 Primary Air Tank

The primary air tank is located above R.H. wheel of drive axle.

This tank is provided with a bottom drain valve (Fig. 27). It is recommended to purge the primary air tank by its bottom drain valve every 12,500 miles (20 000 km) or once a year, whichever comes first.

13.1.3 Secondary Air Tank

This tank is located in front wheelhousing, between air springs. The tank is installed vertically and is provided with a bottom drain valve (Fig. 27).

It is recommended to purge the tank by its bottom drain valve, every 12,500 miles (20 000 km) or once a year, whichever comes first.

13.1.4 Accessory Air Tank

The accessory air tank is installed next to the secondary air tank. The tank is installed vertically and is provided with a bottom drain valve (Fig. 27).

It is recommended to purge the tank by its bottom drain valve, every 12,500 miles (20 000 km) or once a year, whichever comes first.

A remote drain valve is located in front service compartment (Fig. 28) underneath the accessory air filter. Refer to Section 12, paragraph "4. Accessory Air Filter" of the maintenance manual for daily purge procedure.

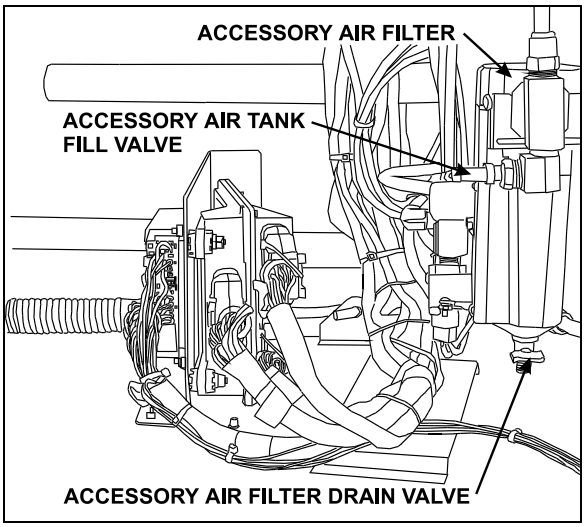

FIGURE 29: FRONT VALVE LOCATION 12201

13.1.5 Expansion Air Tank

Two expansion tanks are located in front wheelhousing. These air tanks are located behind secondary and accessory air tank. Also, six expansion tanks are located near rear air springs (Fig. 27). Expansion tanks are connected in series with air springs. Expansion tanks are used to lower the stiffness of the air spring. They are provided with a bottom drain valve.

It is recommended to purge them, with all other tanks, every 12,500 miles (20 000 km) or once a year, whichever comes first.

13.2 EMERGENCY FILL VALVES

The vehicle is equipped with two air system emergency fill valves to supplement the air system when air pressure is low and engine cannot be operated.

The rear valve is located in engine compartment and accessible from engine R.H. side door (Fig. 28).

⚠ CAUTION ⚠

No other point should be used to supply air system. The maximum allowable air pressure is 125 psi (860 kPa).

The front valve is located in the front service compartment close to accessory air filter (Fig. 29).

These two air valves are fitted with the same valve stems as standard tires, and can be filled by any standard external air supply line.

The rear valve will supply air for all systems (brakes, suspension and accessories) while the front valve will supply air for accessories only.

⚠ CAUTION ⚠

Air filled through these two points will pass through the standard air filtering system provided by Prévost. Do not fill air through any other points.

14. HUB UNIT AND SWIVEL ASSEMBLY

Refer to “DANA SPICER Service Manual General Information, Maintenance Manual Model NDS and Maintenance Manual NDS Axles” annexed to section 10 *"Front Axle".*

15. TORQUE TABLE

DESCRIPTION	*QTY*	*REFERENCE*	*TORQUE (DRY) Lbf-ft / Nm*

DESCRIPTION	QTY	REFERENCE	TORQUE (DRY) Lbf-ft / Nm	
Pitman Arm to Steering Gear Fixing Nut	*1*	*8*	*400-450*	*545-610*
*Drag Link to Pitman Arm Stud Nut****	*1*	*---*	*160-215*	*220-290*
*Drag Link to Bell crank Stud Nut****	*1*	*---*	*160-215*	*220-290*
Drag Link Socket End Clamp Bolt Nut	*2*	*---*	*40-60*	*55-80*
*Relay Rod to Bell crank Stud Nut****	*1*	*---*	*160-215*	*220-290*
*Relay Rod to Idler Arm Stud Nut****	*1*	*5*	*160-215*	*220-290*
*Tie Rod to Bell crank Stud Nut****	*1*	*---*	*160-215*	*220-290*
*Tie Rod to Idler Arm Stud Nut****	*1*	*5*	*160-215*	*220-290*
*Tie Rod to Steering Arm Stud Nut****	*2*	*3*	*160-215*	*220-290*
Tie Rod End Clamp Bolt Nut	*4*	*3*	*40-60*	*55-80*
*Steering Arm to Swivel Nut****	*4*	*---*	*190*	*260*
Torque Rod Stud Nut	*2*	*4*	*160-215*	*220-290*
Idler Arm and Bell Crank Cap Screws	*8*	*9*	*8*	*11*
Torque Rod Mounting Bracket Nut	*4*	*6*	*75-140*	*100-190*
Torque Rod Clamp Nut	*4*	*4*	*53-59*	*72-80*
Jacking Point Bracket Nut	*8*	*19*	*70-80*	*95-110*
Bushing Collar Nut	*8*	*20*	*72-88*	*98-120*
Sway Bar Link Upper Nuts (Rear Suspension)	*2*	*20*	*100-120*	*135-160*
Sway Bar Link Lower Nuts (Rear Suspension)	*2*	*20*	*70-80*	*95-110*

DESCRIPTION	QTY	REFERENCE	TORQUE (Lubricated) (Anti-Seize #680064) Lbf-ft / Nm	
Idler Arm and Bell Crank Mounting Bracket Nut	*8*	*5*	*90-120*	*120-160*
Shock Absorber Mounting Stud Nut	*2*	*19*	*40-50*	*55-70*
Shock Absorber Pin Nut	*2*	*19*	*70-85*	*95-115*
Air Spring Nut	*3*	*18*	*20-25*	*27-34*
Sway Bar Link Upper and Lower Nuts (Front Suspension)	*2*	*20*	*120-140*	*160-190*
*Upper A-Arm Stud Nut****	*2*	*18*	*230-245*	*315-335*
Lower A-Arm Bracket Nut	*8*	*18*	*375-425*	*510-580*

DESCRIPTION	QTY	REFERENCE	TORQUE (Lubricated) (Loctite #242 Blue) Lbf-ft / Nm	
Shock Absorber Pin	*2*	*19*	*350-400*	*475-545*
Steering Gear to Mounting Bracket Bolt	*5*	*8*	*355*	*485*

- **Tighten nut to specified torque, then advance to next aligning cotter pin slot and install a new cotter pin.**

16. SPECIFICATIONS

Front Axle Air Springs

Make ..... Goodyear Tire and Rubber
Diameter ..... 14.5 inches
Air Inlet ..... 1/2''- 14 NPTF
Supplier number 1R14-167
Prévost number 630239

Shock Absorbers

Collapsed length ..... 350 mm
Extended Length ..... 560 mm
Supplier number 481700000208
Prévost number 630251

Height Control Valve

Make ..... Barksdale
Supplier number ..... 52321POAQ3-Q26 and 52321POAQ3-Q62
Prévost number ..... 630156 and 630157

Steering Gear Box

Make ..... ZF-Servocom
Supplier number 8098-988-570
Prévost number 661045

Steering Gear Box (Optional)

Make ..... ZF-Servocomtronic
Supplier number 8098-988-571
Prévost number 661044

Power Steering Hydraulic Pump

Make ..... TRW
Supplier number PS251616L10200
Prévost number 661070

Shim (Camber Adjustment)

Thickness ..... 3.175 mm
Prévost number 160993
Thickness ..... 6.35 mm
Prévost number 160992

Sway bar bushing (Drive Axle)

Make ..... Prévost
Prévost number 130953

SECTION 16: MTH EQUIPPED WITH INDEPENDENT FRONT SUSPENSION (IFS)

CONTENTS

1. INTRODUCTION ..... 16(MTH)-4

2. STEERING LINKAGE ..... 16(MTH)-4

2.1 Power Steering Hydraulic Pump ..... 16(MTH)-7
2.2 Steering Linkage Adjustment ..... 16(MTH)-7
2.3 Pitman Arm Removal ..... 16(MTH)-7
2.4 Pitman Arm Installation ..... 16(MTH)-7
2.5 Drag Link ..... 16(MTH)-8
2.5.1 adjustment ..... 16(MTH)-8
2.6 Bell Crank And Idler Arm ..... 16(MTH)-8
2.6.1 bell crank and idler arm removal ..... 16(MTH)-8
2.6.2 bell crank or idler arm ball joint disassembly ..... 16(MTH)-8
2.6.3 bell crank or idler arm ball joint reassembly ..... 16(MTH)-8
2.7 Relay Rod ..... 16(MTH)-10
2.7.1 replacement ..... 16(MTH)-10
2.8 Tie Rods ..... 16(MTH)-10
2.8.1 removal ..... 16(MTH)-10
2.8.2 installation ..... 16(MTH)-11
2.9 Steering Arms ..... 16(MTH)-11
2.9.1 removal ..... 16(MTH)-11
2.9.2 installation ..... 16(MTH)-11
2.10 Lubrication Fittings ..... 16(MTH)-11

3. BALL JOINTS ..... 16(MTH)-13

4. LOWER AND UPPER A-ARM BALL JOINT ..... 16(MTH)-13

4.1 Inspection ..... 16(MTH)-13
4.2 Stripping Down ..... 16(MTH)-13
4.3 Assembly ..... 16(MTH)-13

5. LOWER A- ARM CENTRAL BALL JOINT ..... 16(MTH)-14

5.1 Inspection ..... 16(MTH)-14
5.2 Stripping Down ..... 16(MTH)-14
5.3 Assembly ..... 16(MTH)-14

6. UPPER A-ARM CENTRAL BALL JOINT ..... 16(MTH)-15

6.1 Visual Inspection ..... 16(MTH)-15
6.2 Play Measurement ..... 16(MTH)-15

7. FRONT END ALIGNMENT ..... 16(MTH)-15

7.1 Alignment Terminology ..... 16(MTH)-16
7.2 Front End Inspection ..... 16(MTH)-16
7.3 Front Wheel Camber ..... 16(MTH)-17
7.4 Front Wheel Toe-In ..... 16(MTH)-17
7.4.1 toe-in check ..... 16(MTH)-17
7.4.2 toe-in adjustment ..... 16(MTH)-17
7.5 Front Axle Caster ..... 16(MTH)-17
7.6 Major Damage ..... 16(MTH)-19

8. FRONT AIR SPRINGS ..... 16(MTH)-19

8.1 INSPECTION ..... 16(MTH)-19
8.2 REMOVAL ..... 16(MTH)-19
8.3 INSTALLATION ..... 16(MTH)-19

9. SHOCK ABSORBERS ..... 16(MTH)-20

9.1 SHOCK ABSORBER REMOVAL ..... 16(MTH)-21
9.2 SHOCK ABSORBER INSTALLATION ..... 16(MTH)-21

10. SWAY BAR ..... 16(MTH)-21

10.1 REMOVAL ..... 16(MTH)-21
10.2 INSTALLATION ..... 16(MTH)-21

11. INDEPENDENT FRONT SUSPENSION ADJUSTMENT ..... 16(MTH)-23

12. SUSPENSION HEIGHT ADJUSTMENT ..... 16(MTH)-23

13. HEIGHT CONTROL VALVE ..... 16(MTH)-24

13.1 LOADING POSITION ..... 16(MTH)-24
13.2 NEUTRAL POSITION ..... 16(MTH)-24
13.3 UNLOADING POSITION ..... 16(MTH)-24
13.4 MAINTENANCE ..... 16(MTH)-24
13.5 REMOVAL AND INSTALLATION ..... 16(MTH)-25

14. "LEVEL-LOW" LEVELING SYSTEM ..... 16(MTH)-25

14.1 PRINCIPLES OF OPERATION ..... 16(MTH)-25
14.2 MAINTENANCE ..... 16(MTH)-25

15. AIR SYSTEM ..... 16(MTH)-25

15.1 AIR TANK MAINTENANCE ..... 16(MTH)-26
15.1.1 wet air tank ..... 16(MTH)-26
15.1.2 primary air tank ..... 16(MTH)-26
15.1.3 secondary air tank ..... 16(MTH)-26
15.1.4 accessory air tank ..... 16(MTH)-27
15.1.5 expansion air tank ..... 16(MTH)-27
15.2 EMERGENCY FILL VALVES ..... 16(MTH)-27

16. HUB UNIT AND SWIVEL ASSEMBLY ..... 16(MTH)-27

17. TORQUE TABLE ..... 16(MTH)-28

18. SPECIFICATIONS ..... 16(MTH)-29

ILLUSTRATIONS

FIGURE 1: SUSPENSION AND STEERING LINKAGE ..... 16(MTH)-4
FIGURE 2: LOCATION OF CLAMPS ..... 16(MTH)-5
FIGURE 3: CLAMP POSITIONING ..... 16(MTH)-6
FIGURE 4: CLAMP POSITIONING ..... 16(MTH)-6
FIGURE 5: CLAMP POSITIONING ..... 16(MTH)-6
FIGURE 6: CLAMP POSITIONING ..... 16(MTH)-6
FIGURE 7: CLAMP POSITIONING ..... 16(MTH)-6
FIGURE 8: PITMAN ARM ALIGNMENT ..... 16(MTH)-7
FIGURE 9: FIXING NUT PUNCH MARK ..... 16(MTH)-8
FIGURE 10: BELL CRANK AND IDLER ARM ..... 16(MTH)-9
FIGURE 11: BELL CRANK ..... 16(MTH)-9
FIGURE 12: BELL CRANK ..... 16(MTH)-10
FIGURE 13: LUBRICATION FITTINGS' LOCATION DIAGRAM ..... 16(MTH)-12
FIGURE 14: BALL JOINTS LOCATION ..... 16(MTH)-13
FIGURE 15: A-ARM BALL JOINTS ..... 16(MTH)-13
FIGURE 16: UPPER A-ARM BALL JOINT ..... 16(MTH)-14
FIGURE 17: LOWER A-ARM BALL JOINTS ..... 16(MTH)-14
FIGURE 18: LOWER A-ARM CENTRAL BALL JOINT ..... 16(MTH)-14
FIGURE 19: UPPER A-ARM CENTRAL BALL JOINT ..... 16(MTH)-15
FIGURE 20: STEERING LINKAGE MEASURE ..... 16(MTH)-16
FIGURE 21: FRONT END ALIGNMENT DIAGRAM ..... 16(MTH)-18
FIGURE 22: AIR SPRINGS ..... 16(MTH)-19
FIGURE 23: AIR SPRING AND SHOCK ABSORBER ..... 16(MTH)-20
FIGURE 24: SHOCK ABSORBER ..... 16(MTH)-21
FIGURE 25: SWAY BAR (FRONT SUSPENSION) ..... 16(MTH)-22
FIGURE 26: SWAY BAR (REAR SUSPENSION) ..... 16(MTH)-22
FIGURE 27: HEIGHT CONTROL VALVE LOCATION ..... 16(MTH)-23
FIGURE 28: TYPICAL AIR SPRING CLEARANCE ..... 16(MTH)-24
FIGURE 29: FRONT HEIGHT CONTROL VALVE ..... 16(MTH)-24
FIGURE 30: LOCATION OF AIR TANKS ..... 16(MTH)-26
FIGURE 31: REAR VALVE LOCATION ..... 16(MTH)-26
FIGURE 32: FRONT VALVE LOCATION ..... 16(MTH)-27

1. INTRODUCTION

This supplement contains service procedures and specifications that apply to the PREVOST converted coach shell vehicles equipped with an independent front suspension.

This text contains information unique to the independent suspension system. In the case you cannot find information on a subject in this supplement section, the information given in the regular sections of the Maintenance Manual will apply.

2. STEERING LINKAGE

Turning motion of the steering wheel is transferred by the steering gear and steering linkage to the steering arms at the right and left front wheels. The steering linkage consists of tie rods connected to the bell crank and the steering arm at the left side of the coach, and to the idler arm and steering arm at the right side of the coach. The bell crank and idler arm are connected by a relay rod. A drag link connected to the bell crank and the pitman arm, which is mounted to the steering gear, transfers the turning motion of the steering wheel to the steering arms. The hydraulic power cylinder provides an added source of assistance and being connected to the R.H. wheel, makes it such that the total steering forces are produced with minimal stress on mechanical linkages (Fig. 1).

Lower and upper A-arms are widely spaced. They are mounted on ball joints. Torque rods prevent rotation of the uprights around the lower and upper ball joints.

If the steering linkage is bent, twisted or worn, steering action of the coach will be seriously affected. Any time steering linkage components are replaced or adjusted, steering geometry and front wheel alignment must be checked as explained in this section of supplement.

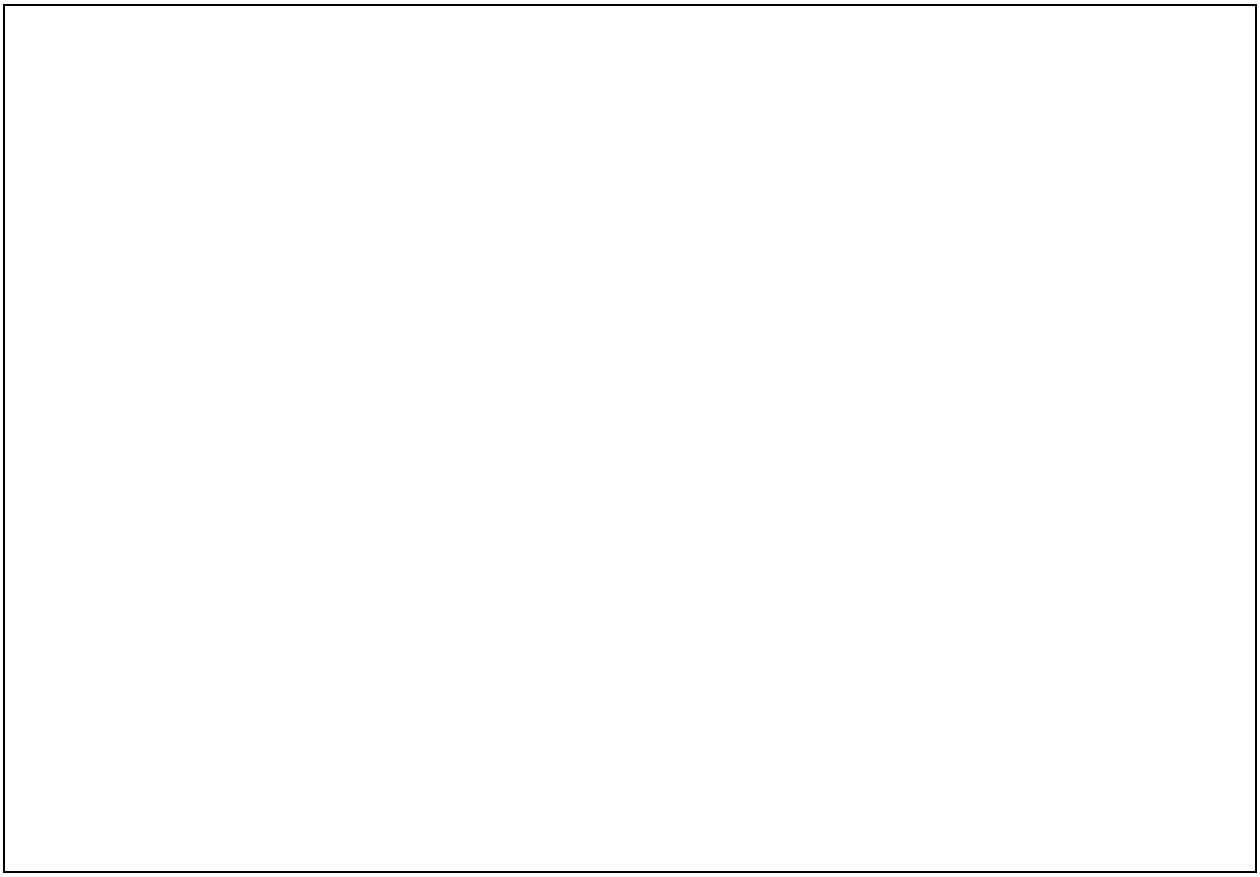

FIGURE 1: SUSPENSION AND STEERING LINKAGE 16124

Turning Angle

The maximum turning angle is set mechanically through the two steering stop screws installed on the swivel assembly. The turning angle (56° + 0° - 1°) mechanical stop is factory adjusted to accommodate the chassis design, and therefore, does not require adjustment on new vehicles.

However, turning angle should be checked and adjusted hydraulically, if necessary, any time a component of the steering system is repaired, disassembled or adjusted.

Before checking the turning angle, be sure the front end is properly aligned as described under paragraph "4. Front End Alignment" in this supplement.

To check steering maximum turning angle, proceed with the following method:

1. Check if front tires rub against the frame or if the steering gear has been serviced.

⚠ CAUTION ⚠
If clamps are not correctly installed, they can interfere with other parts.

2. For a full left and right turn, check clamps' position and for interfering parts. Refer to figures 2 to 7 for location and positioning of clamps. If readjustment is required, make the proper adjustment.

NOTE
Prior to steering limiter adjustment, verify vehicle wheel alignment, and ensure that oil level is adequate and that air bleeding is done.

3. If necessary readjust steering limiter. Refer to "ZF-SERVOCOM Repair Manual" annexed to XL2 Maintenance Manual, Section 14, "Steering", under heading: "Setting and Functional Test".

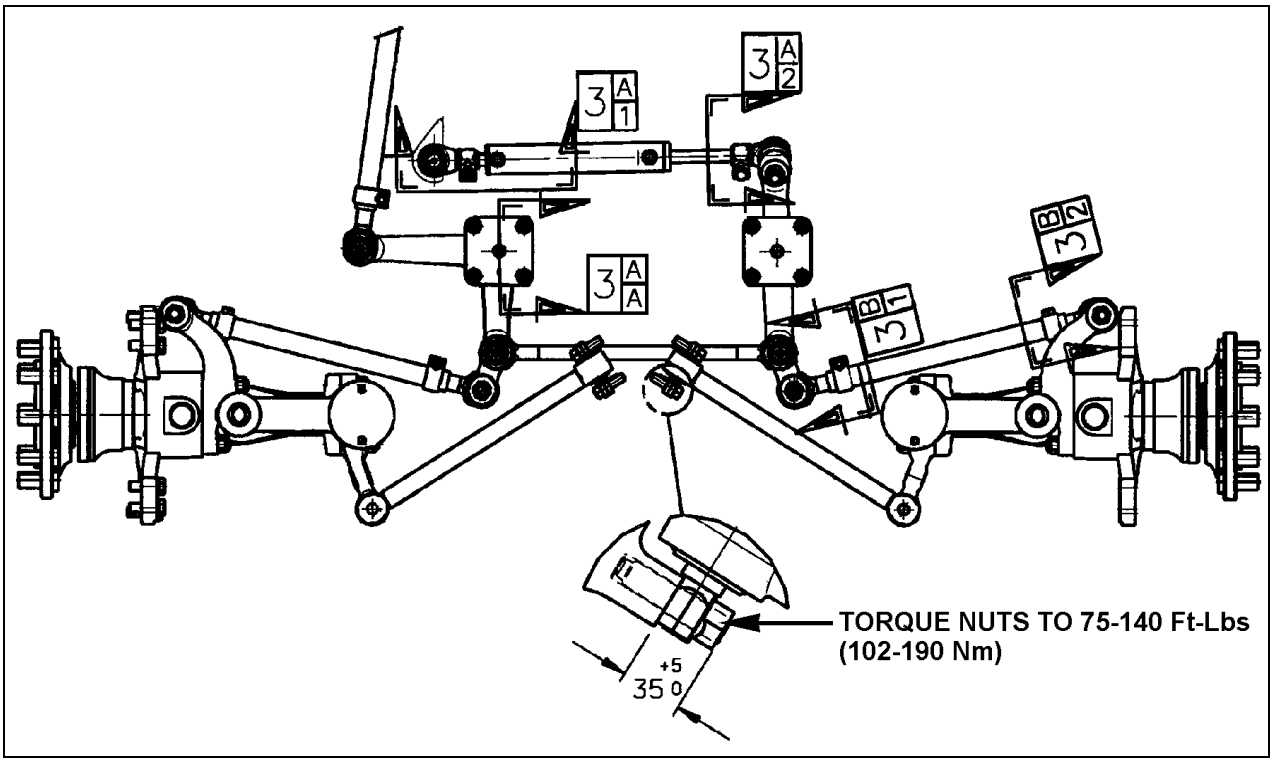

FIGURE 2: LOCATION OF CLAMPS 16126

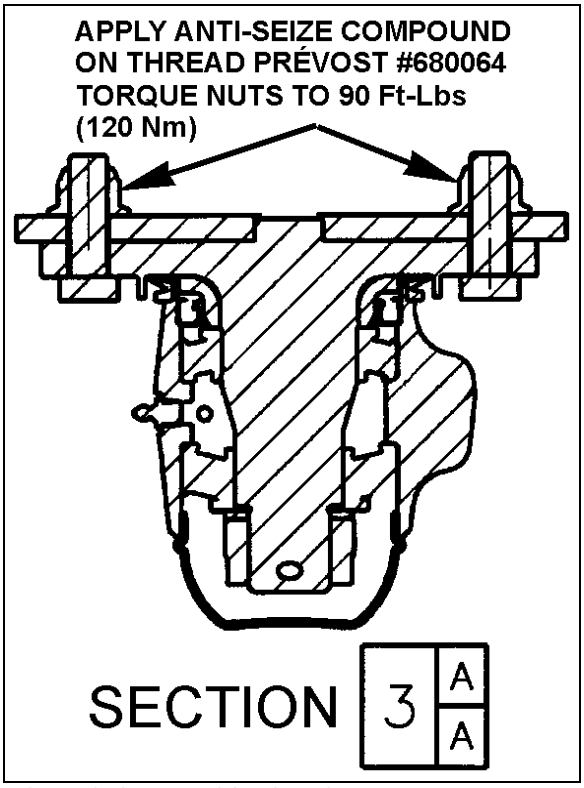

FIGURE 3: CLAMP POSITIONING 16128

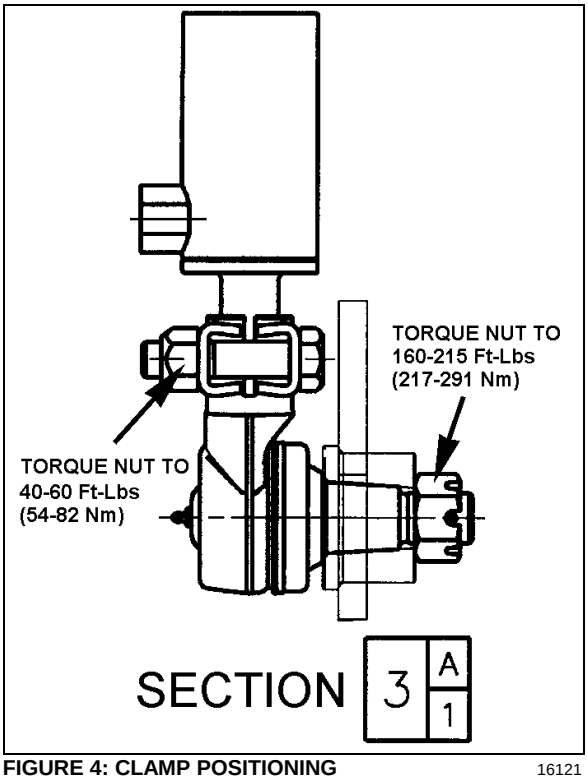

FIGURE 4: CLAMP POSITIONING 16121

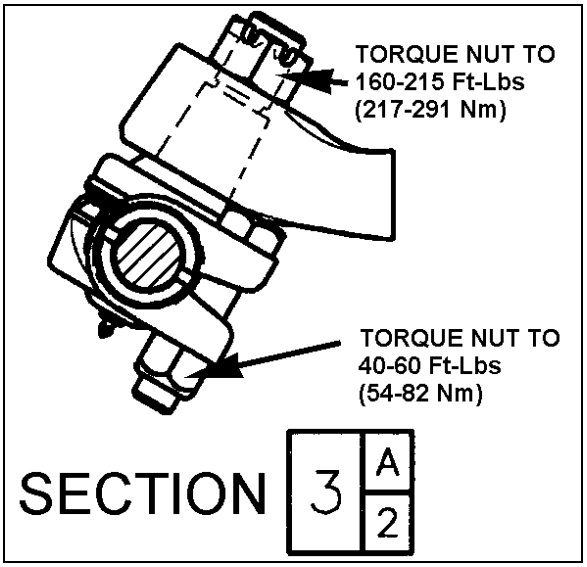

FIGURE 5: CLAMP POSITIONING 16122

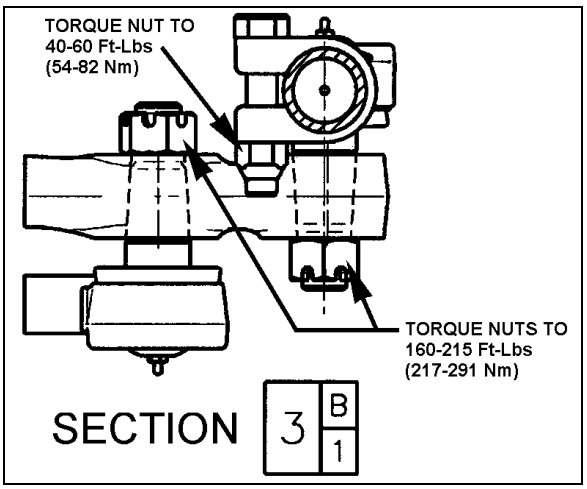

FIGURE 6: CLAMP POSITIONING 16120

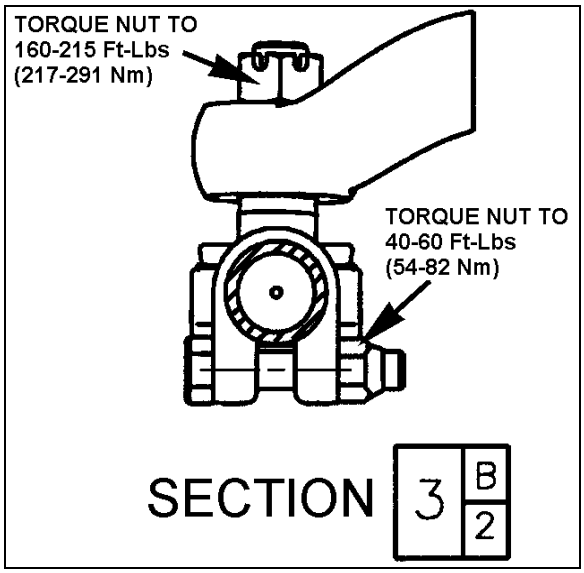

FIGURE 7: CLAMP POSITIONING 16123

2.1 POWER STEERING HYDRAULIC PUMP

Refer to the "TRW Power Steering Pump Service Manual" annexed at the end of Section 14

2.2 STEERING LINKAGE ADJUSTMENT

NOTE

Whenever a steering linkage component has been removed and replaced, check steering geometry and front end alignment as directed in this Supplement. Check to insure that all stud nuts and mounting bolts and nuts have been tightened to proper torques listed under "16. Torque Table" at the end of this supplement.

1. First, align the input shafts marks.
2. Afterwards, the pitman arm should be adjusted with reference marks aligned or to an angle of 90° in relation with the horizontal axis (Fig. 8).
3. Locate centerline of vehicle then install relay rod in boss at steering bell crank and idler arm. Align center of relay rod with centerline of vehicle.
4. Install drag link to pitman arm and adjust opposite end of drag link to fit mounting stud hole in bell crank.
5. Install tie rods, and then adjust toe-in as per "Front End Alignment" in this Supplement.

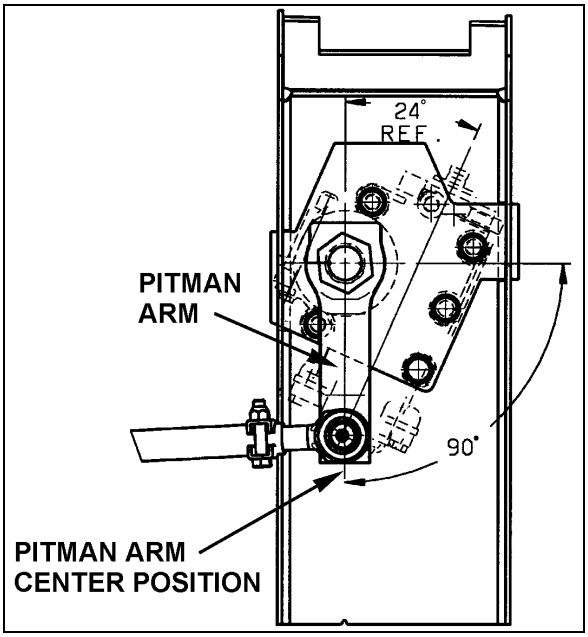

FIGURE 8: PITMAN ARM ALIGNMENT 14037

2.3 PITMAN ARM REMOVAL

1. Remove cotter pin, nut and washer from drag link ball stud at pitman arm.
2. Disconnect drag link from pitman arm, using jaw style pullers (pressure screw type).

⚠ WARNING ⚠

Always wear approved eye protection when operating pullers.

⚠ CAUTION ⚠

Do not drive pitman arm on or off pitman shaft as this can damage the steering gear.

⚠ CAUTION ⚠

Heating of components to aid in disassembly is not allowed because it has a detrimental effect on axle components and steering linkages.

3. Remove pitman arm fixing nut.
4. Check the radial position of the pitman arm in relation to the sector shaft prior to removal of pitman arm.
5. Add reference marks to the arm and shaft if necessary to ensure correct alignment at reassembly.
6. Use a puller to remove pitman arm.

2.4 PITMAN ARM INSTALLATION

1. Position pitman arm on sector gear shaft with reference marks aligned.
2. Install fixing nut. Tighten nut to 400-450 lbf-ft (545-612 Nm).

NOTE

Use a new nut if the previously removed nut was punched.

⚠ CAUTION ⚠

Lock nut with sector shaft using a punch mark into the groove (Refer to figure 9).

3. Connect drag link to pitman arm. Install washers. Tighten nut to 160-215 lbf-ft (218-292 Nm). Advance nut to next alignment cotter pin slot and install a new cotter pin.

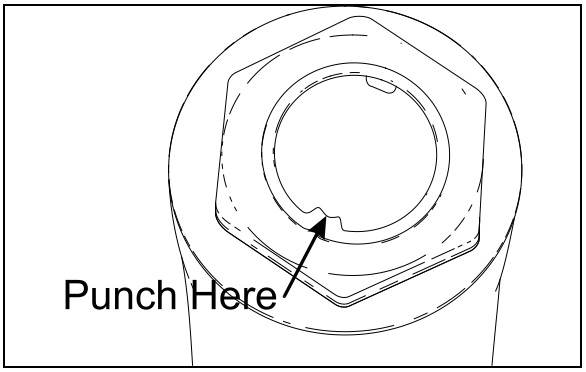

FIGURE 9: FIXING NUT PUNCH MARK 16098

2.5 DRAG LINK

Drag link assembly consists of three parts; a drag link and two end assemblies. Both end assemblies are identical and they are retained on the drag link with a clamp bolt and nut.

Stud nuts at the pitman arm and bell crank ends of the drag link must be kept tight or hole at ball stud end of drag link and hole in pitman arm may become enlarged as a result of excessive looseness. Subsequent tightening of stud nuts may draw studs too far into holes and dust cover parts may become damaged which can result in component failure.

Drag link end sockets are equipped with lubrication fittings and should be lubricated as directed in "Lubrication Fittings" in this supplement.

2.5.1 Adjustment

It should not be necessary to alter the length of the drag link except when a new link is installed or when removable end assembly has been replaced. If drag link adjustment is necessary, proceed as follows:

1. Position front wheels in straight ahead position.
2. Center steering gear as previously explained in paragraph "2.1 Steering Linkage Adjustment".
3. Remove cotter pin and stud from drag link at bell crank. Locate centerline of vehicle and center of relay rod. With center of relay rod aligned with centerline of vehicle, loosen clamp bolt at socket end (bell crank end) of drag link and adjust length of socket end assembly to fit in boss of bell crank.

NOTE
Do not change position of pitman arm.

4. Install stud nut and torque to 160 lbf-ft (220 Nm). Align nut with cotter pin slot (tighten) and install a new cotter pin.
5. Torque mounting clamp bolt nut to 40-60 lbf-ft (54-82 Nm), then test the adjustment. Front wheels should turn from right to left extremities without noticeable binding at drag link ends.

2.6 BELL CRANK AND IDLER ARM

Bell crank and idler arm are equipped with one lubrication fitting and should be lubricated as directed in paragraph "2.9 Lubrication Fittings" at the end of this Supplement.

2.6.1 Bell Crank and Idler Arm Removal

NOTE
Use a piece of wire to anchor loosen end of relay rod and tie rod in order to prevent placing an excessive load on opposite socket end.

Bell crank: Disconnect drag link, tie rod and relay rod from bell crank by removing cotter pins, stud nuts and washers from ball studs. Separate socket assemblies from the bell crank.

Idler arm: Remove cotter pins, nuts and washers from ball studs connecting relay rod and tie rod to idler arm. Separate socket assemblies from idler arm.

Remove nuts and washers from bolt attaching bell crank or idler arm mounting bracket to vehicle understructure. Remove bell crank or idler arm mounting bracket.

2.6.2 Bell crank or Idler Arm Ball Joint Disassembly

1. Remove adjacent link assemblies from bell crank or idler arm as previously described.
2. Remove the cap (Fig. 10).
3. Remove the cotter pin, nut and tongue washer. Remove bearings, grease seal, bearing bushing and the bell crank or idler arm from its mounting bracket stud (Fig. 10).

2.6.3 Bell Crank or Idler Arm Ball Joint Reassembly

NOTE
For bearing installation use tool Prévost # 110684.

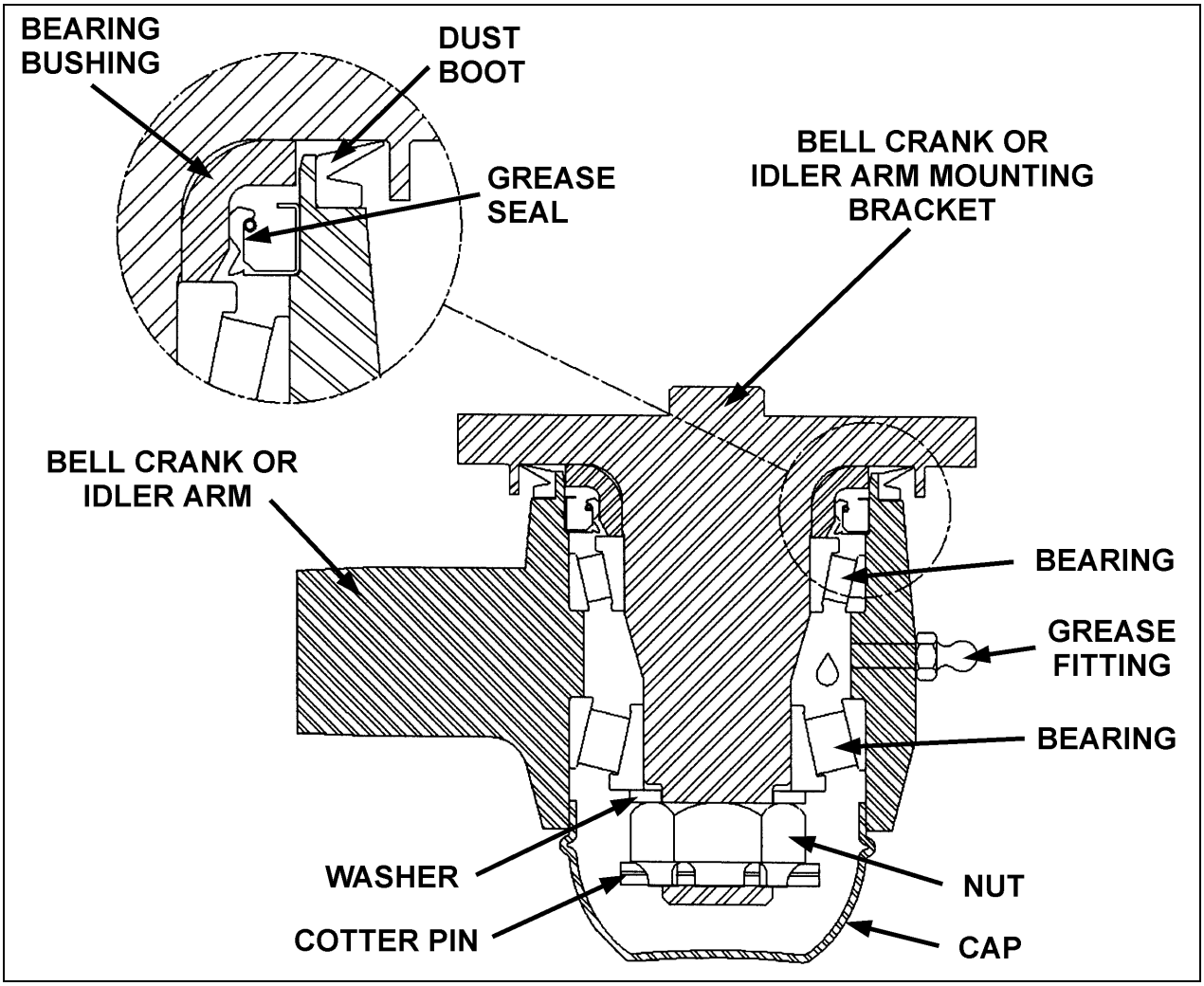

FIGURE 10: BELL CRANK AND IDLER ARM 16109

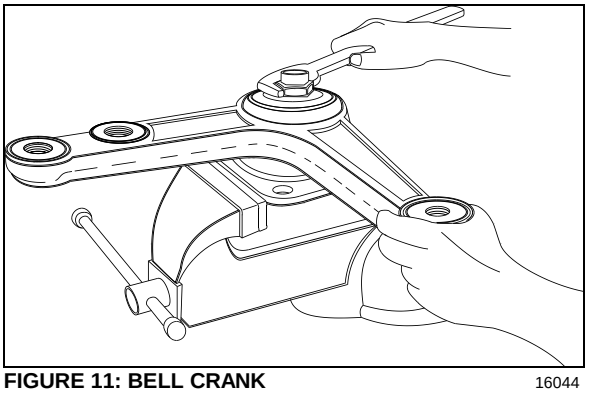

FIGURE 11: BELL CRANK 16044

1. Install bearing bushing on bell crank or idler arm mounting bracket stud.
2. Install bearing and grease seal in bell crank or idler arm eye (Fig. 10).

NOTE
Install grease seal according to figure 8. Grease must be able to exit the bell crank or idler arm mechanism. For grease seal installation use tool Prévost # 110683.

3. Install bell crank or idler arm on its mounting bracket stud (Fig. 10).
4. Install bearing and nut.

NOTE
Apply grease on bearing before installation.

5. Firmly tighten nut (Fig. 11).
6. Unscrew nut until bell crank or idler arm starts to turn by the application of 1 to 3 pounds load (Fig. 12).

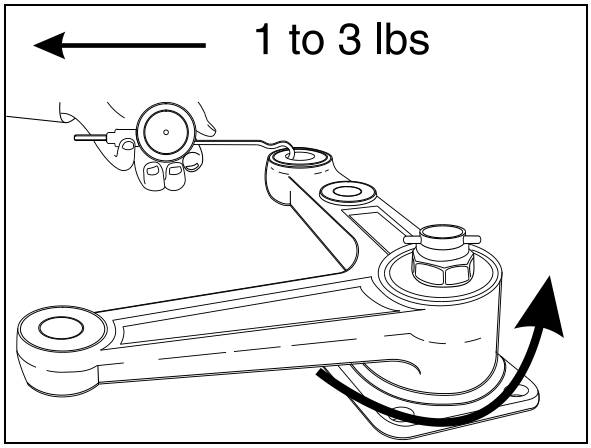

FIGURE 12: BELL CRANK 16045

7. Check for loose bearings by applying an up and down load on bell crank or idler lever (Fig. 12). The lever is not supposed to move in the vertical axis direction.
8. Align nut with cotter pin slot (tighten) and install a new cotter pin.

NOTE
Bend cotter pin around the nut (Fig. 10). Do not bend the cotter pin in the direction of the cap, because it may interfere with the cap.

9. Install the cap.
10. **Bell crank:** Install drag link, tie rod and relay rod as directed herein under each specific subject.
11. **Idler arm:** Install tie rod and relay rod as directed herein under each specific subject.
12. Adjust turning angle as previously directed under paragraph "**Turning Angle**" and check front end alignment as specified in paragraph "6. Front End Alignment" of this supplement.

2.7 RELAY ROD

Relay rod ends are equipped with lubrication fittings and should be lubricated as directed in paragraph "2.9 Lubrication Fittings" in this supplement.

NOTE
The relay rod is crimped in place and it is not possible to remove the ball joints.

2.7.1 Replacement

1. Remove cotter pins from bell crank and idler arm end of relay rod. Loosen nuts flush with end of studs.
2. Use a puller or place a sledge hammer behind the adjacent part to absorb shocks. Strike the studs with a brass hammer to loosen end assemblies.
3. Remove stud nuts and washers then remove studs.
4. Position relay rod studs into bell crank and idler arm then tap stud ends with a brass hammer to seat tapered surfaces.
5. Install washers and stud nuts. Tighten nuts to 160 lbf-ft (220 Nm) torque. Align cotter pin slot (tighten) and install a new cotter pin.

2.8 TIE RODS

Tie rod ends are connected to the bell crank and left steering arm, and to the idler arm and right steering arm. Each tie rod assembly consists of three parts; a tube and two socket end assemblies. The tie rod ends are threaded into the tube and secured with clamp bolts. Right and left hand threads are provided to ease toe-in adjustment. Tie rod assemblies are interchangeable from the right to the left side of the coach.

Tie rod end sockets require no maintenance other than periodic lubrication and inspection to see that ball studs are tight. Replace socket ends when there is excessive up and down motion, lost motion or end play at ball end of stud.

1. Periodically check bolt nut for tightness.
2. Inspect tie rod for bent condition and inspect tube for damaged threads. If tie rod is bent or threads are damaged, replace the assembly.
3. Lubricate tie rod end fittings as directed in paragraph "2.9 Lubrication Fittings" at the end of this section.

2.8.1 Removal

1. Remove cotter pins and stud nuts which attach tie rod socket ends to bell crank and left steering arm (or idler arm) and right steering arm.
2. Remove tie rod ball stud by tapping on steering arm and bell crank or idler arm with hammer, while using a sledge hammer to absorb shocks.

NOTE
If tie rod end assemblies are damaged in any way, they must be replaced.

2.8.2 Installation

1. Install socket end assemblies on tie rod. Be sure both ends are threaded an equal distance into the tube.
2. Make sure threads on stud and in stud nut are clean and not damaged.
3. Position ball studs (socket ends of tie rod) in holes in steering arm and bell crank or idler arm. Install a ball stud nut on each stud and tighten firmly.
4. Torque stud nuts to 160 lbf-ft (220 Nm). Align cotter pin slot (tighten) and install a new cotter pin.

NOTE
Adjust toe-in as directed in paragraph "6.4.2 Toe-In Adjustment" of this supplement.

5. Make sure tie rod ends are properly aligned with ball studs, then torque tie rod end clamp bolts to 40-60 lbf-ft (54-82 Nm).

NOTE
If tie rod is not properly aligned with stud, binding will result.

2.9 STEERING ARMS

The left and right wheel steering arms are secured to a swivel at one end and to a tie rod at the other end.

2.9.1 Removal

1. Remove wheel as directed in Section 13, "Wheel, Hubs And Tires" of the maintenance manual.
2. Remove cotter pin, washer and nut from stud securing tie rod to steering arm. Remove ball stud from steering arm by tapping on arm with a hammer, placing a sledge hammer underneath steering arm to absorb shocks.
3. Remove cotter pin and nut securing steering arm to swivel assembly. Remove steering arm from swivel.

2.9.2 Installation

1. Insert steering arm in swivel.
2. Torque steering arm to swivel nut to 190 lbf-ft (260 Nm). Align cotter pin slot (tighten) and install a new cotter pin.
3. Position tie rod ball stud in steering arm and tap with a brass hammer to seat ball stud in steering arm. Install washer and nut on stud. Torque nut to 160-215 lbf-ft (217-291 Nm). Tighten nut to nearest cotter pin slot and install a new cotter pin.
4. Install wheel as directed in Section 13, "Wheel, Hubs And Tires" under paragraph "3.2 Installation" of the maintenance manual.

2.10 LUBRICATION FITTINGS

All lubrication fittings must be clean before applying lubricant. Also, always be sure equipment used in applying lubricant is clean. Every precaution should be taken to prevent entry of dirt, grit, lint or other foreign matter into lubricant containers. Replace fitting when they become broken or damaged.

Intervals of application given in the following paragraphs are recommended for normal service. More frequent intervals may be applied under severe operating conditions. In selecting proper lubricants, supplier reputation must be considered. The supplier must be responsible for product quality. The diagram (Fig. 13) shows approximate location of steering lubrication fittings.

1. **Drag Link Ends:** Lubricate at two fittings, one at each end of link, every 6,250 miles (10 000 km) with good quality lithium-base grease NLGI No. 2 (Shell Retinax LX or equivalent).
2. **Relay Rod Ends:** Lubricate at two fittings, one at each end of rod, every 6,250 miles (10 000 km) with good quality lithium-base grease NLGI No. 2 (Shell Retinax LX or equivalent).
3. **Tie Rod Ends:** Lubricate at four fittings, one at each end of both tie rods, every 6,250 miles (10 000 km) with good quality lithium-base grease NLGI No. 2 (Shell Retinax LX or equivalent).
4. **Swivel Assembly:** Refer to DANA SPICER MAINTENANCE MANUAL NDS AXLES Lubrication and Maintenance" annexed at the end of section 10.
5. **Idler Arm and Crank bell:** Lubricate at two fittings, one on the idler arm and the other on the crank bell, every 6,250 miles (10 000 km) with good quality lithium-base grease NLGI No. 2 (Shell Retinax LX or equivalent). Apply grease gun pressure to the fitting until lubricant appears at the top seal.
6. **Upper V-Link Outer Ball Joint:** Lubricate at fitting until you see some grease on the relief

valve nearby, every 6,250 miles (10 000 km) with good quality lithium-base grease NLGI No. 2 (Shell Retinax LX or equivalent).

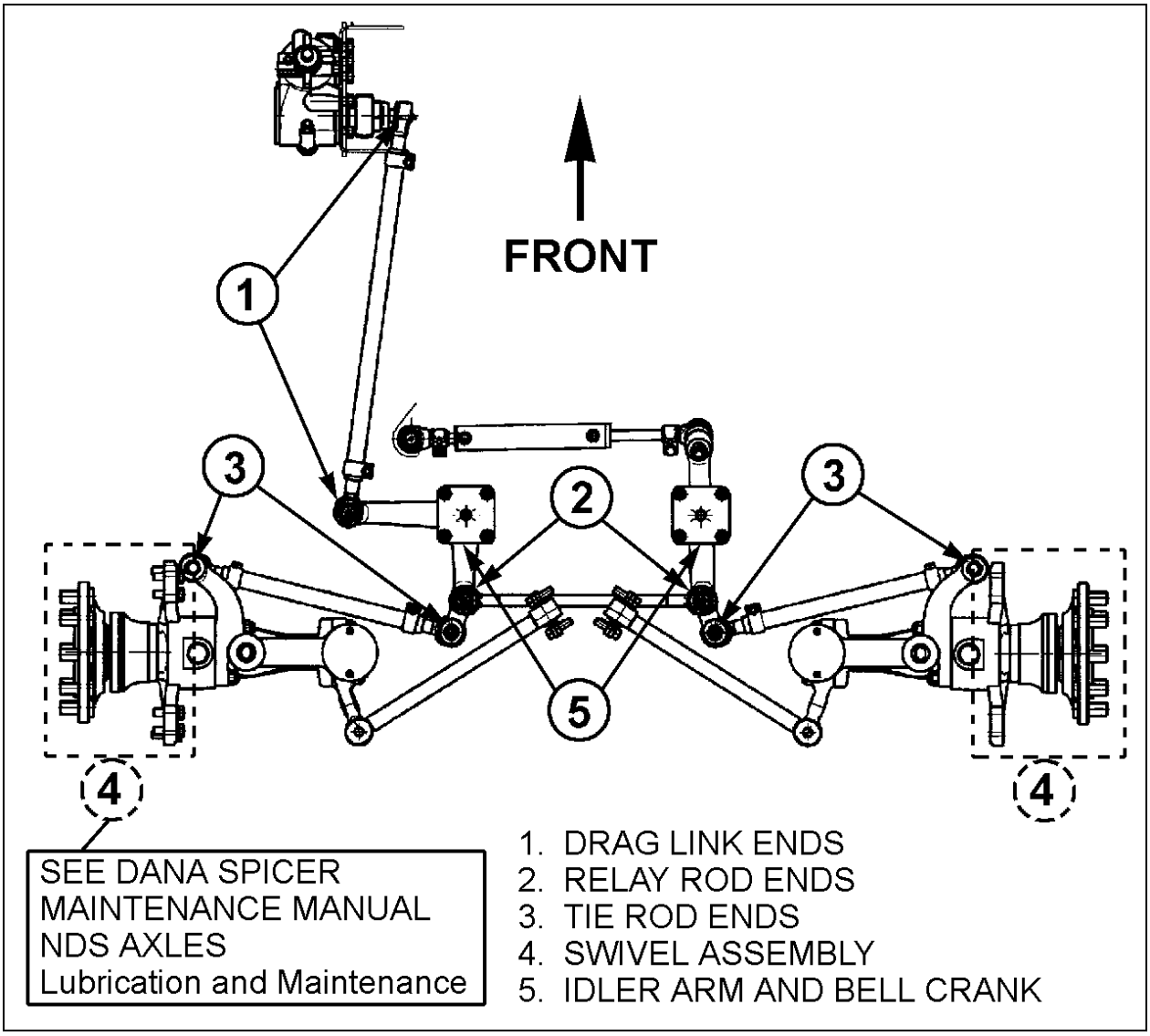

FIGURE 13: LUBRICATION FITTINGS' LOCATION DIAGRAM 16118

3. BALL JOINTS

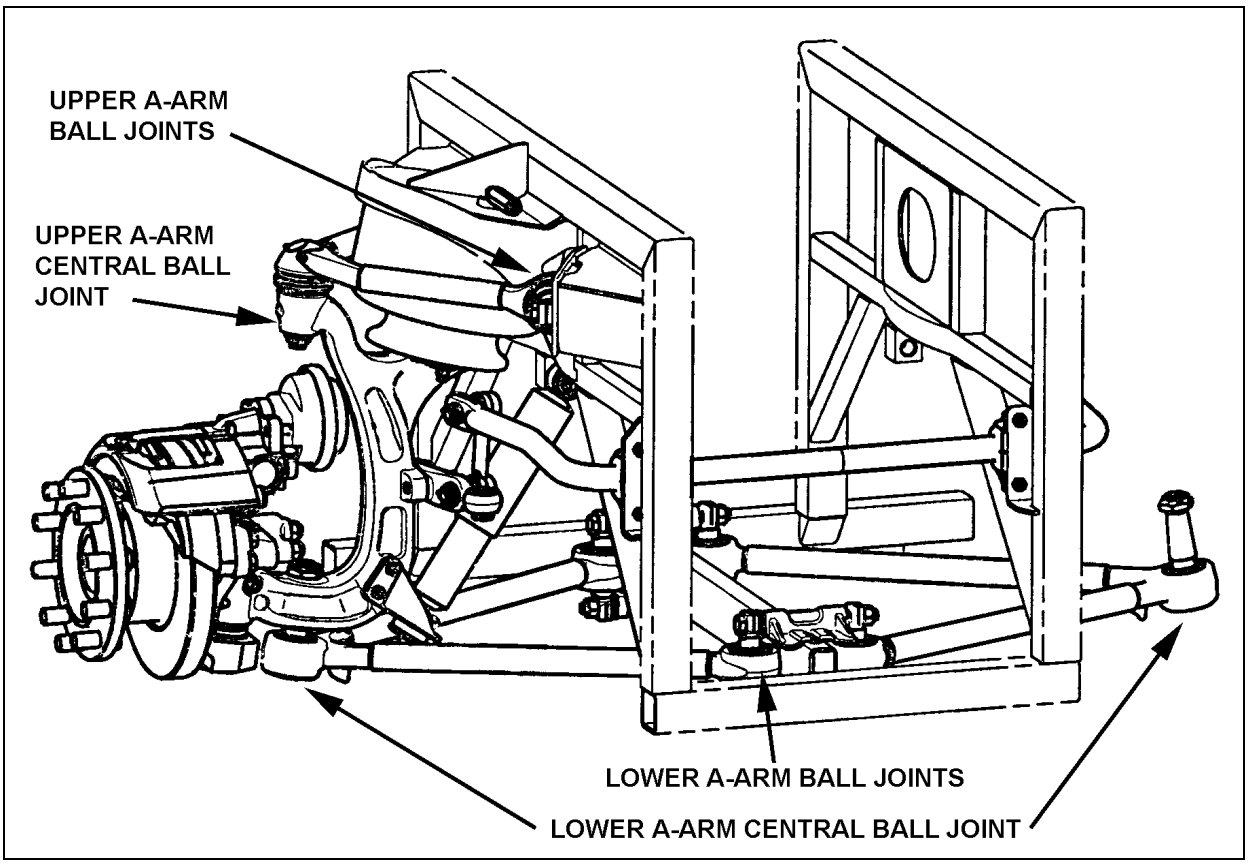

FIGURE 14: BALL JOINTS LOCATION 16137

4. LOWER AND UPPER A-ARM BALL JOINT

The assembly work may be done only by a recognized specialized workshop. Ensure that old and new parts do not get mixed up with each other. It is for this reason that all the old parts are to be scrapped immediately after a joint has been stripped down. A complete repair set must be used for each joint repaired, i.e. use of only part of a repair set is not permissible.

4.1 INSPECTION

Take off the load from the ball joint by lifting the front of the vehicle. Apply a load on the joint in all of the degrees of freedom in an axial, radial, etc. sense with a suitable lever tool. After the load is taken off, the joint has to spring back into its starting position. Free play is not acceptable.

Separation of rubber from ball pin or external joint shell is in accordance with "normal wear characteristics".

When the following characteristics are noted, the joint is to be changed:

- Free play;
- Radial cracking of the external sheet-metal race.

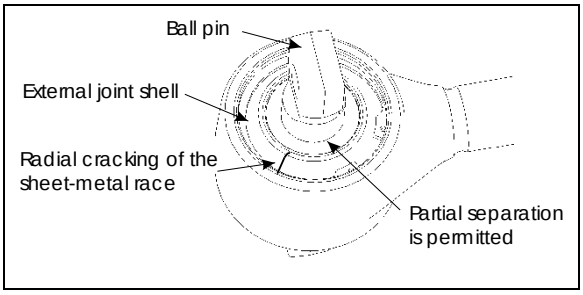

Figure 15: A-ARM BALL JOINTS

4.2 STRIPPING DOWN

Strip down the defective joint through removal of retaining ring, annular spacer and ball pin/bushing assembly and thereafter clean out housing bore and locking circlips groove.

4.3 ASSEMBLY

Execute assembly of the new joint parts in the following sequence:

1. Complete moistening of the contact surface between housing bore and ball pin through application of the grease.

NOTE
Apply grease, only in the case of repair kit (Prévost # 611114)).

2. Insert ball pin/bushing assembly. In case of the two-bolt type, ensure that the bolt bores are in the correct position in relation to the axis of the tube.

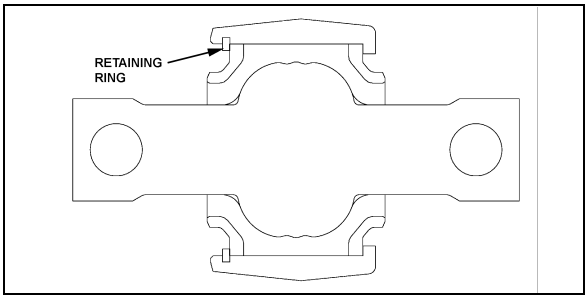

FIGURE 16: UPPER A-ARM BALL JOINT

3. Place joint in receiving fixture and mount annular assembly tool on the housing. Then locate annular spacer and retaining ring in the housing using axial load with the aid of assembly matrix. If the ends of the annular spacer are not in contact with each other, the thus formed opening must be located at 180° to the opening of the retaining ring. Pay attention during assembly to ensure that the retaining ring eyelets are located at each side of the housing shaft axis (retaining ring eyelet lug points to tube), and that retaining ring is properly engaged in the groove of the housing.
4. When repairing defective ball pin assemblies, the necked down-bolt must regularly be replaced with a new one.

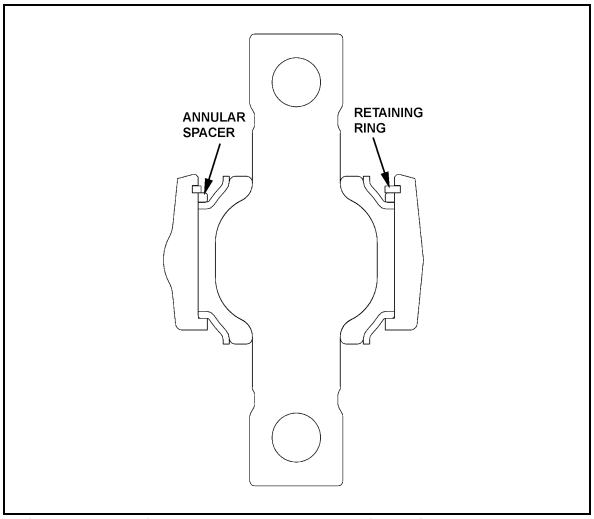

FIGURE 17: LOWER A-ARM BALL JOINTS 16047

5. LOWER A- ARM CENTRAL BALL JOINT

5.1 INSPECTION

Take off the load from the ball joint by lifting the front of the vehicle. Apply a load on the joint in all of the degrees of freedom in an axial, radial, etc. sense with a suitable lever tool. After the load is taken off, the joint has to spring back into its starting position. Free play is not acceptable.

Separation of rubber from ball pin or external joint bushing shell is in accordance with "normal wear characteristics".

When the following characteristics are noted, the joint is to be changed:

- Free play;
- Radial cracking of the external bushing shell.

5.2 STRIPPING DOWN

Strip down the defective joint through removal of retaining ring, annular spacer and ball pin/bushing, assembly and thereafter clean out housing bore and locking circlips groove

5.3 ASSEMBLY

Assemble the new component parts of the joint in the following sequence:

1. Complete moistening of the contact surface between housing bore and ball pin through application of the grease.

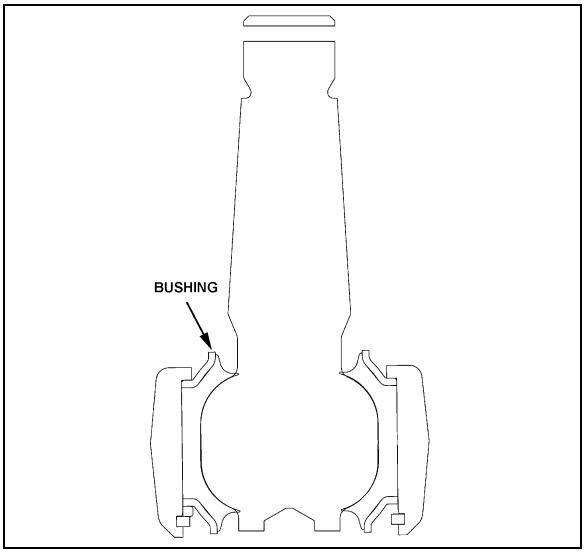

FIGURE 18: LOWER A-ARM CENTRAL BALL JOINT

2. Place joint in receiving fixture and mount annular assembly tool on the housing. Then locate annular spacer and retaining ring in the housing using axial load with the aid of assembly matrix. If the ends of the annular

spacer are not in contact with each other, the thus formed opening must be located at 180° to the opening of the retaining ring. Pay attention during assembly to ensure that the retaining ring eyelets are located at each side of the housing shaft axis (retaining ring eyelet lug points to tube), and that retaining ring is properly engaged in the groove of the housing.

3. Faultlessly apply grease by mechanical means to bracket-outer core and ball-inner cone. Insert bracket outer cone in fixture with distance ring and then use press tool to apply pressure to press mount with ball-inner cone.

6. UPPER A-ARM CENTRAL BALL JOINT

6.1 VISUAL INSPECTION

Check the condition of the sealing boot, in particular:

Check if the retainer ring, which secures the sealing boot at the conical section of the ball stud, is still present.

Check if grease is present on the external surface of the sealing boots. Escaped fluid and accumulations of grease on the sealing boot may be the result of the sealing boot's rupturing. In this case, the ball joint must be systematically replaced.

6.2 PLAY MEASUREMENT

1. Raise the vehicle and support through axle jacking points.

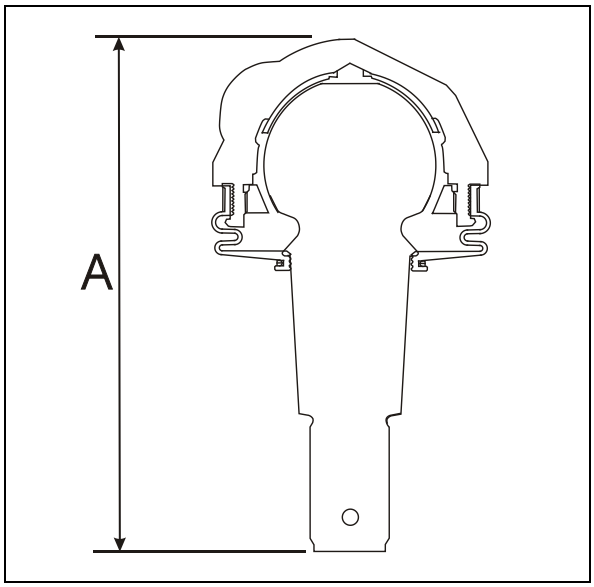

FIGURE 19: UPPER A-ARM CENTRAL BALL JOINT 16116

2. Using a caliper, measure dimension A on figure 19.
3. With a lever tool, exert sufficient force under the upper A-arm as to separate the upper A-arm from the upright in order to have the ball joint to its maximum extent. Remeasure the dimension A. If the difference between the two dimensions is greater than 0.060" (1.5mm), then the ball joint should be replaced.

7. FRONT END ALIGNMENT

Proper front end alignment must be maintained to insure ease of steering and provide satisfactory tire life. When making front end alignment inspections, the vehicle must be level and empty with the full weight of the vehicle on the wheels.

Front end alignment inspections fall into two groups: regular service inspections performed at periodic intervals, and inspections to determine the extent of damage after a collision or severe service.

Regular service inspections concern toe-in, camber and caster.

Any variation from the specified alignment will indicate either a need for adjustment or a more thorough inspection to determine if parts replacement is required.

⚠ WARNING ⚠

During alignment, both camber and caster among other angles are adjusted. When adjusting these we install or remove shims from the lower "A" arms of the ISS suspension. After performing alignment, make sure that the following is done:

- **Installing a new lock nut after all shims are finalized.**
- **Torque replaced nuts as per figure 23.**
- **Installing a longer bolt if less the 2 threads are remaining after the nut.**
- **Using a Torque mark on the nut for future visual inspection.**

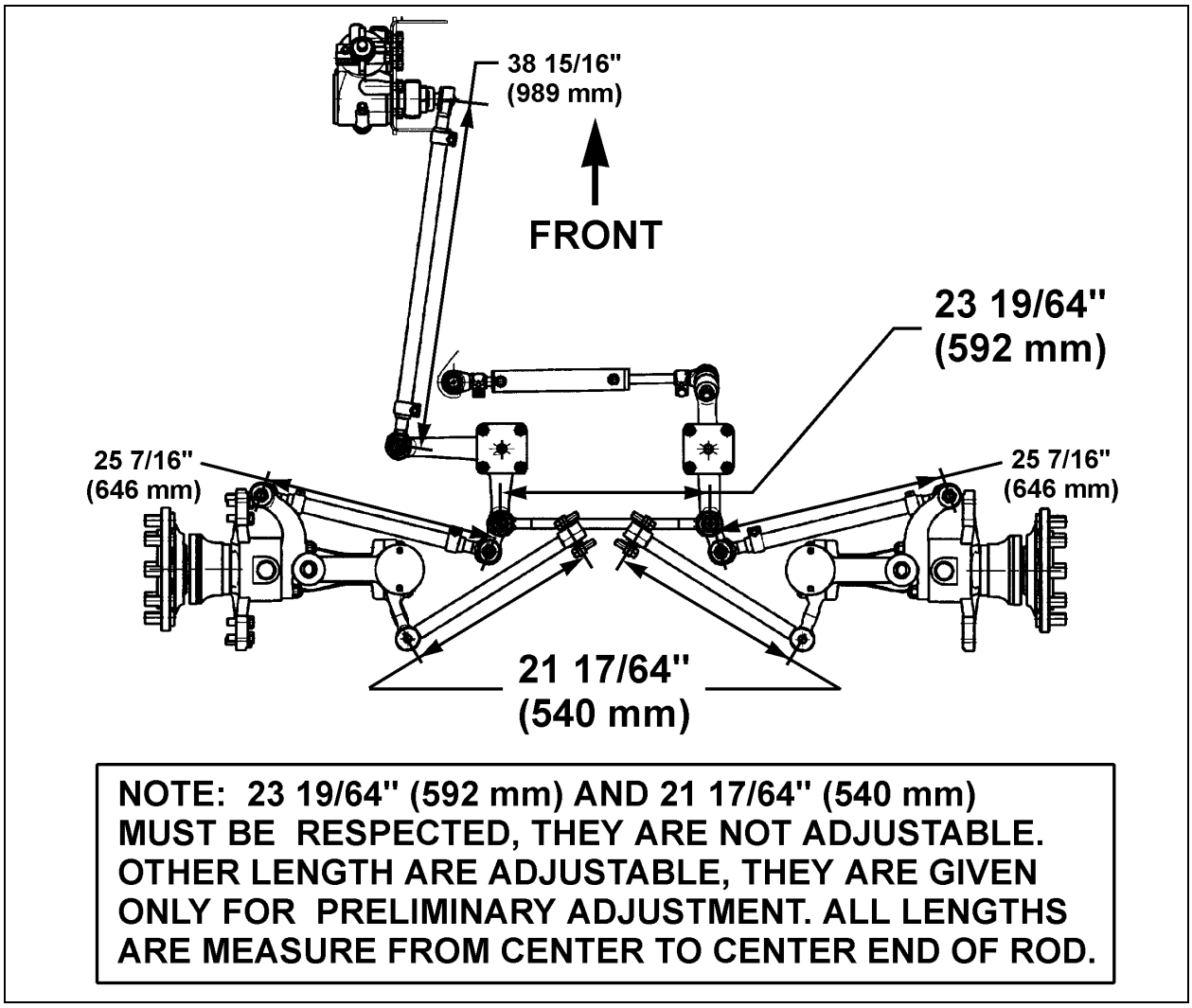

FIGURE 20: STEERING LINKAGE MEASURE 16132

7.1 ALIGNMENT TERMINOLOGY

Wheel Camber

The amount the wheels are inclined from the vertical plane (A, Fig. 21).

Wheel Toe-In

The distance the front wheels are closer together at the front than at the rear of the tires (D minus E, Fig. 21).

King Pin Inclination

The inclination of the king pin from vertical toward the center of the vehicle at the top and outward at the bottom (B, Fig. 21).

Front Axle Caster

The inclination of the king pin from vertical in the fore and aft direction (C, Fig. 21).

7.2 FRONT END INSPECTION

Before checking front end alignment, make the following inspection:

1. Check that the vehicle is at normal ride height (see paragraph "11. Suspension Height Adjustment").
2. Check the tires for proper inflation.
3. Check wheel installation and run-out.
4. Check wheel bearing adjustment.
5. Check tie rods and drag link ends for looseness.
6. Check king pins for looseness.
7. Check if the length of the torque rod is 21 17/64" (540 mm) (Fig. 20). Check if the length of the relay rod is 23 19/64" (592 mm).

7.3 FRONT WHEEL CAMBER

Positive camber is the outward inclination of the wheels at the top, negative or reverse camber is the inward inclination of the wheels at the top. Camber variations may be caused by wear at the wheel bearings, wheel spindle bushings, or bent suspension parts.

Check camber, with an accurate gauge. If camber is incorrect, check suspension parts for wear and replace worn parts. If wear is not perceptible, suspension parts may be bent or lower suspension arm may be improperly shimmed.

Check King pin inclination. If King pin inclination is incorrect, readjust the camber and check king pin inclination again.

NOTE
Camber is more important than king pin inclination, so adjust camber and verify king pin inclination.

Shim the lower suspension arm to adjust camber. If the king pin inclination is incorrect, the wheel king pin assembly may be bent and therefore should be replaced.

Excessive positive camber results in irregular wear of the tires at the outer shoulders. Negative or reverse camber causes wear at the inner shoulders.

NOTE
Shim only the lower suspension arm to adjust the front wheel camber.

⚠ CAUTION ⚠
Once the perfect shim combination is achieved, always install new stover nuts because the self looking effect is lost after tightening and loosening of the nut. It is recommended to punch marks to detect loosening of the nuts during future visual inspections.

7.4 FRONT WHEEL TOE-IN

Toe-in is measured from the center of the tire treads. Measurements at the front and rear of the tires must be made at the same height from the floor. Incorrect toe-in results in excessive tire wear and steering instability with a tendency to wander.

7.4.1 Toe-In Check

1. Check the camber adjustment and adjust if necessary.
2. Hoist the front of the vehicle and spin the wheels marking the centerline of the tire treads.
3. Place the wheels in the straight ahead position and lower the vehicle to rest on the floor.
4. Roll the vehicle ahead several feet. This removes any slack caused by looseness in the wheel bearings or steering connections.
5. Check the distance between the tire centerlines at the front and rear of the front tires. These two measurements must be made at the same height above the floor. The front measurement must be 3/32 ±1/32 of an inch less than the rear measurement.

7.4.2 Toe-In Adjustment

1. Loosen the tie rod clamp bolts.
2. Using a pipe wrench, turn the tie rod tubes to obtain the toe-in measurement specified in step 5 under paragraph "6.4.1 Toe-in Check" of this Supplement.
3. Tighten the tie rod clamp bolts and recheck toe-in.
4. Check that the angular relationship of the pitman arm to the steering gear is as shown in figure 8.

NOTE
Use only tie rods to adjust toe-in.

7.5 FRONT AXLE CASTER

Positive caster is the inclination of the top of the king pins toward the rear of the vehicle. Negative or reverse caster is the inclination of the king pins toward the front of the vehicle. This vehicle is designed with positive caster. The purpose of caster is to provide steering stability by keeping the wheels in a straight ahead position.

Caster variations may be caused by bent upper suspension arm, lower suspension arm, or king pin housing. Caster should be adjusted with shims. Precision instruments should be used to measure caster. Shim bell crank and idler arm to adjust caster.

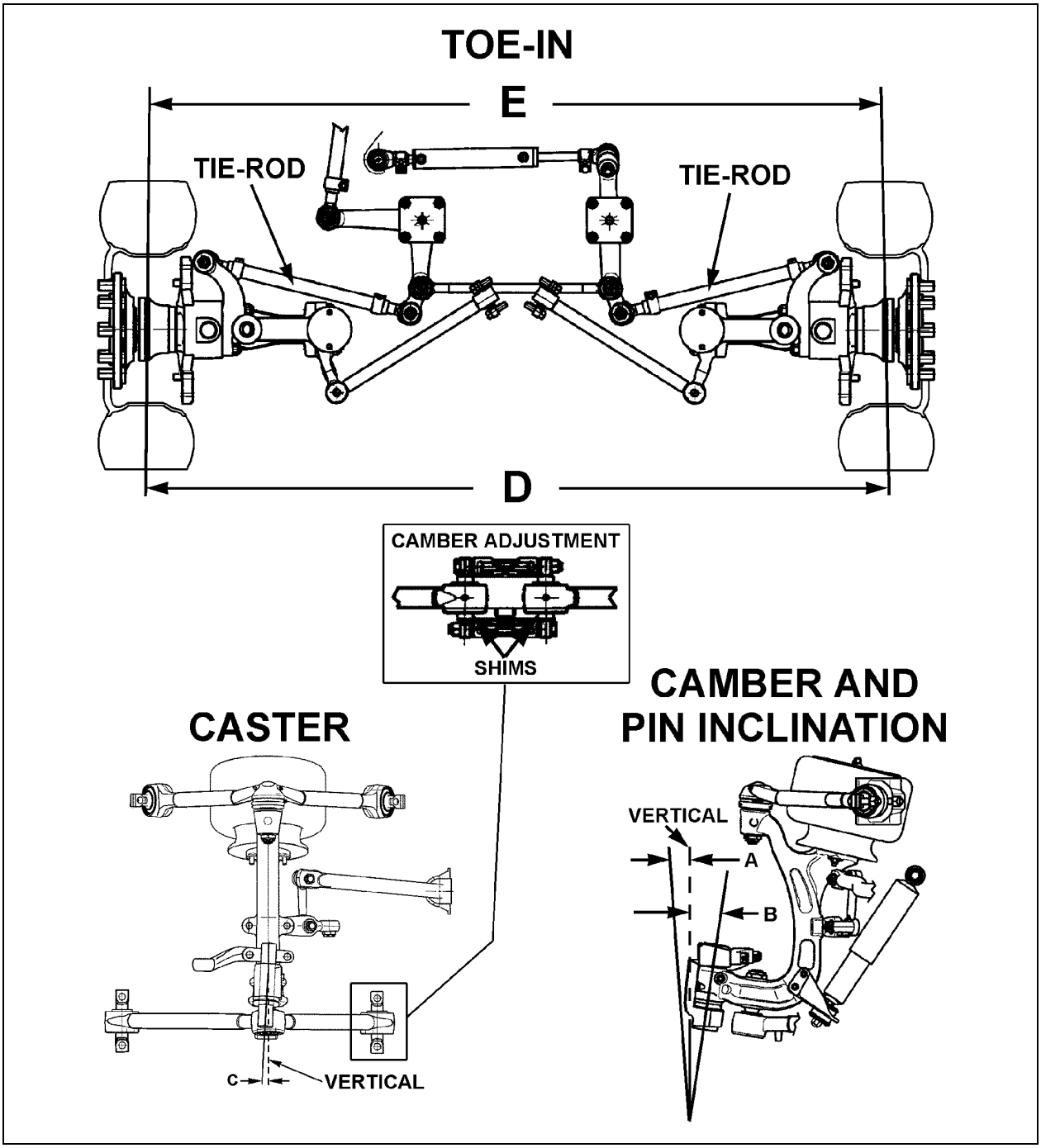

FIGURE 21: FRONT END ALIGNMENT DIAGRAM 16133

ALIGNMENT SPECS (See Figure 21)							
		Minimal		Nominal		Maximal	
Load		Non-converted	Converted	Non-converted	Converted	Non-converted	Converted
A	WHEEL CAMBER	0.2	-0.150	0.35	0.0	0.55	0.200
B	KING PIN INCLINATION	8° (not adjustable)					
C	CASTER	2.55		2.8		3.05	
D-E	TOE-IN	0.08		0.13		0.17	

Variations from the specified caster will affect steering stability, cause wandering, wheel shimmy, and reduce returnability when pulling out of curves.

7.6 MAJOR DAMAGE

If the suspension has sustained major damage, it may be necessary to shim the bell crank and the idler arm to avoid the bump steer or roll steer. Moreover refer to paragraph "7. Front End Alignment".

8. FRONT AIR SPRINGS

Two *"rolling lobe"* type air springs are used with the independent front suspension, one at each wheel. These air springs are special and use the complete piston as an extra reservoir to lower the spring stiffness. Front air springs are attached to the subframe and to uprights.

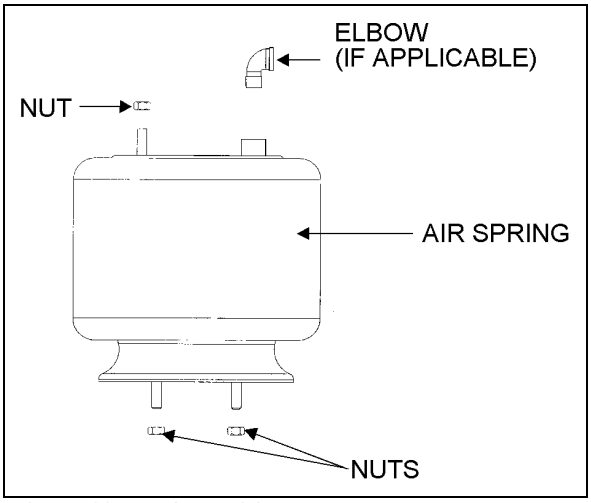

FIGURE 22: AIR SPRINGS 16052

8.1 INSPECTION

1. Check operation of bellows.
2. Visually inspect bellows for evidence of cracks, punctures, deterioration, or chafing. Replace the bellows if damage is evident.
3. With the primary air system at normal operating pressure (95 - 125 psi (655 - 860 kPa)), coat all suspension air line connections and bellow mounting areas with a water and soap solution. Bubbles will indicate an air leak, and none is permissible. Repair or replace defective parts.

NOTE
If air spring is removed from vehicle, bellows can be lightly inflated and submerged in water to detect any leakage. If leakage is detected, replace bellows.

⚠ WARNING ⚠
To prevent personal injury, do not apply more than 10 psi (69 kPa) air pressure to the unmounted air spring.

8.2 REMOVAL

NOTE
Front air springs can be removed without removing the entire suspension assembly.

1. Safely support vehicle at the recommended body jacking points and jack up body understructure.
2. To gain access to a given air spring, the corresponding wheel can be removed.

⚠ CAUTION ⚠
Only the recommended jacking points must be used as outlined in Section 18, "Body" in the maintenance manual.

3. Support the assembly with a suitable jack.
4. Exhaust compressed air from accessory air tank by opening drain cock under reservoir.
5. Disconnect the height control valve link and pull down the overtravel lever to ensure all air is exhausted from air springs.

NOTE
While performing this step, do not change the height control valve overtravel lever adjustment.

6. Disconnect air line from air spring, remove elbow (if applicable), and cover both the line end and fitting to prevent the entry of foreign matter.
7. Remove the air spring upper nut, and then the two lower nuts. Remove air spring and remove the back up plate from the top of the air spring.

8.3 INSTALLATION

NOTE
To facilitate air spring installation, compress it manually then put a piece of tape over the air line threaded fitting. This prevents air from getting back into the bag and keeps it compressed, thus enabling to place the bag in between the mounting plates and greatly easing installation.

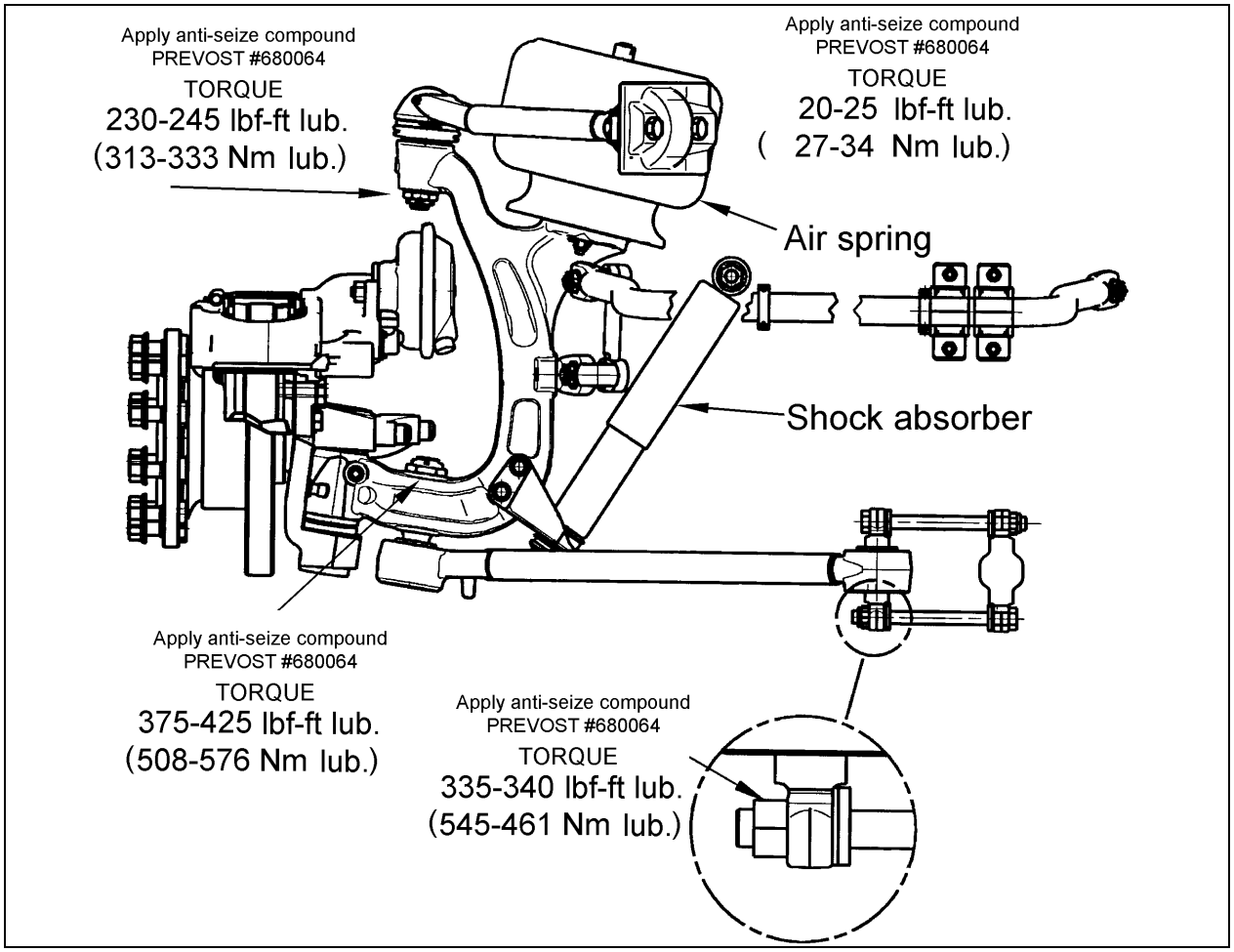

FIGURE 23: AIR SPRING AND SHOCK ABSORBER 16145

1. Compress air spring as necessary, then aligning studs with their holes, position air spring between both the lower and upper supports. Thread the lower nuts and the small upper nut a few turns.
2. Tighten and torque the lower stud nuts, and then the upper nut to 20-25 lbf-ft (27–34 Nm).
3. Install elbow (if applicable), then connect air line.
4. Connect the height control valve link.
5. Build up air pressure in system.

NOTE
To accelerate this operation, air reservoirs can be filled from an exterior air supply connected to the accessory tank fill valve or to the emergency fill valve.

6. Check operation of bellows, and with the primary air system at normal operating pressure (95 - 125 psi (655 - 860 kPa)), coat the air line connections and air spring mounting areas with a water and soap solution. Bubbles will indicate an air leak, and none is permissible. Repair or replace defective parts.
7. Remove the hydraulic floor jack from underneath shock absorber bracket.

9. SHOCK ABSORBERS

The two front shock absorbers are double-acting and telescopic type. Shock absorbers ensure a smooth ride and enhance vehicle stability on the road. Front shock absorbers have eye-type mountings on the upper side and bayonet type on lower side. Shock absorbers are non-adjustable and non-repairable.

⚠ CAUTION ⚠

When a shock absorber is found defective, always replace with a new set on affected axle, except if there has been a recent replacement of one unit. The following method will help in determining if both shock absorbers on the same axle have to be replaced.

9.1 SHOCK ABSORBER REMOVAL

1. Remove the nut, washer and rubber joint from shock absorber mounting stud. Discard the rubber joints.
2. Remove the nut and washer from shock absorber mounting pin (upper side), taking care to identify the inner and outer washers to ease reinstallation. Refer to figure 24 for details.
3. Remove the shock absorber from the vehicle.
4. Remove inner: washers, rubber joint and bushings from the shock absorber. Discard bushings and rubber joint.

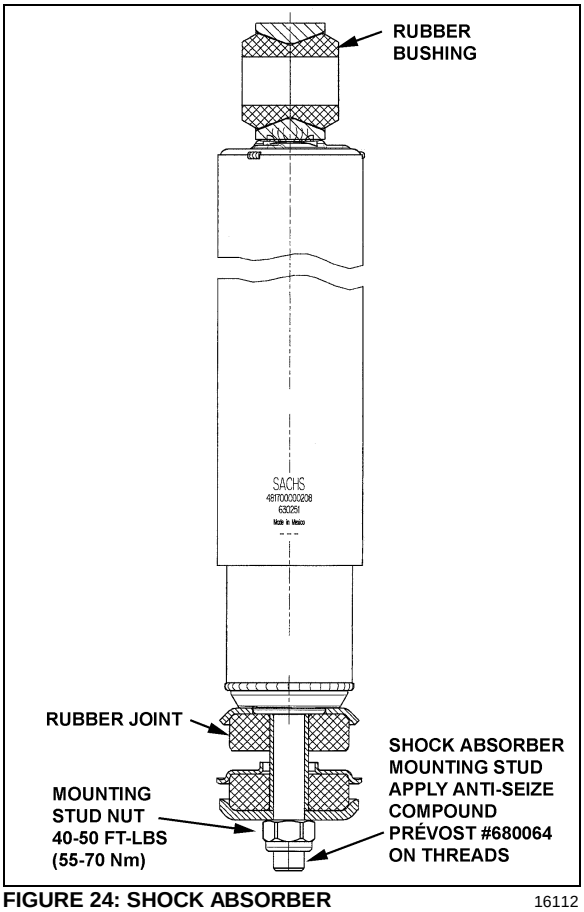

FIGURE 24: SHOCK ABSORBER 16112

9.2 SHOCK ABSORBER INSTALLATION

1. Check that the shock absorber mounting pin torque is proper (350-400 lbf-ft (475-545 Nm)). Ensure that the stud is clean and not stripped (upper side).
2. Install new rubber (mounting) bushing on shock absorber (upper side).
3. Place the inner washer on shock absorber pin (Fig. 24).
4. Install washer and rubber joint on shock absorber mounting stud (lower side).
5. Install the shock absorber as shown in figure 18 with the mounting stud protruding through the hole in the mounting bracket and the shock absorber eyes over the mounting pins. Install the outer washer.
6. Place a rubber joint and washer on the shock absorber mounting stud. Place the lower shock absorber mounting stud nut and torque to 40-50 lbf-ft (54–68 Nm).
7. Place the upper mounting pin stud nut and torque to 70-85 lbf-ft (95–116 Nm).

10. SWAY BAR

A sway bar is provided on the front and drive axles to increase vehicle stability. It controls lateral motion (swaying movement) of vehicle.

10.1 REMOVAL

1. Disconnect the two links from sway bar.
2. Safely support the sway bar. Unbolt bushing collars from subframe.
3. Remove sway bar.

NOTE
Sway bar bushings are slit to ease their removal.

10.2 INSTALLATION

1. Loosely install the sway bar.
2. Torque bushing collar nuts to 60 lbf-ft (82 Nm).
3. Torque sway bar link upper nuts to 120-140 lbf-ft (163-190 Nm) on front suspension and to 100-120 lbf-ft (136-163 Nm) on rear suspension.
4. Torque sway bar link lower nuts to 120-140 lbf-ft (163-190 Nm) on front suspension and to 70-80 lbf-ft (95-110 Nm) on rear suspension.

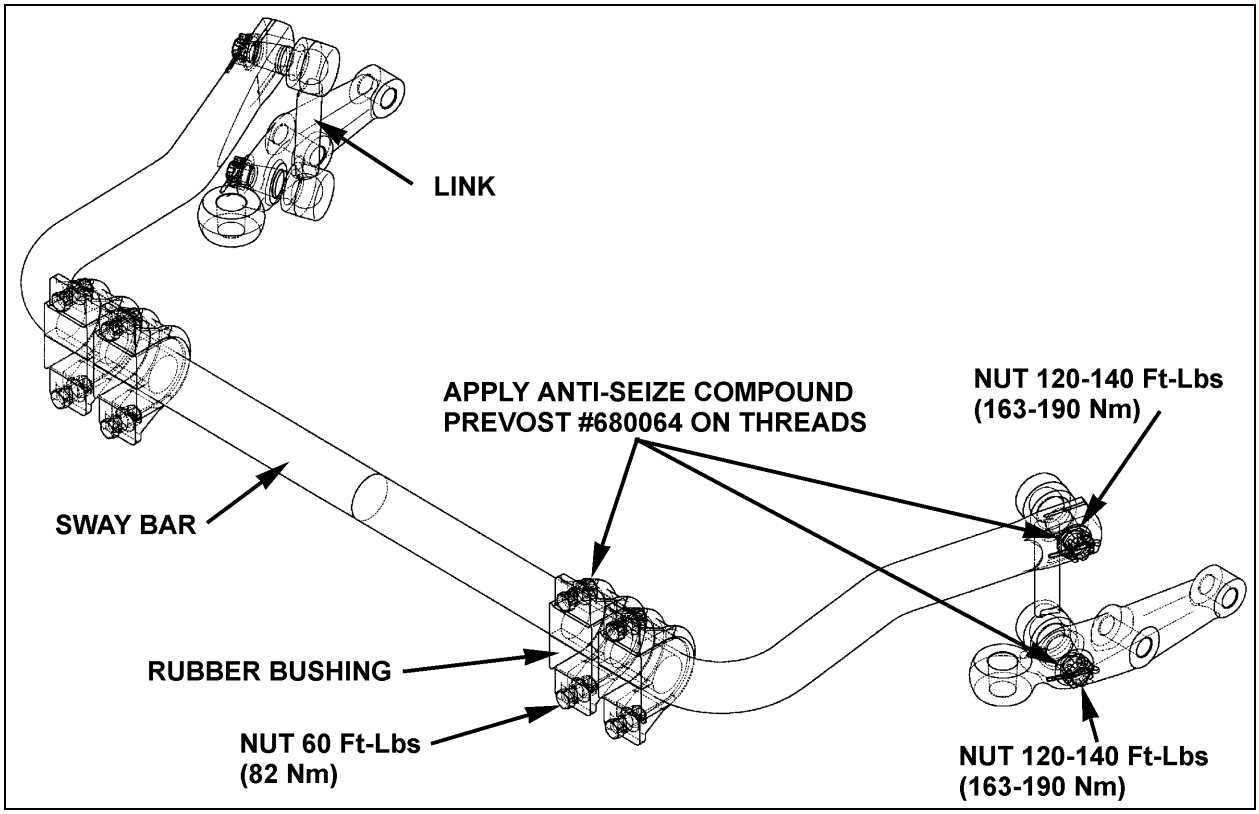

FIGURE 25: SWAY BAR (FRONT SUSPENSION) 16055

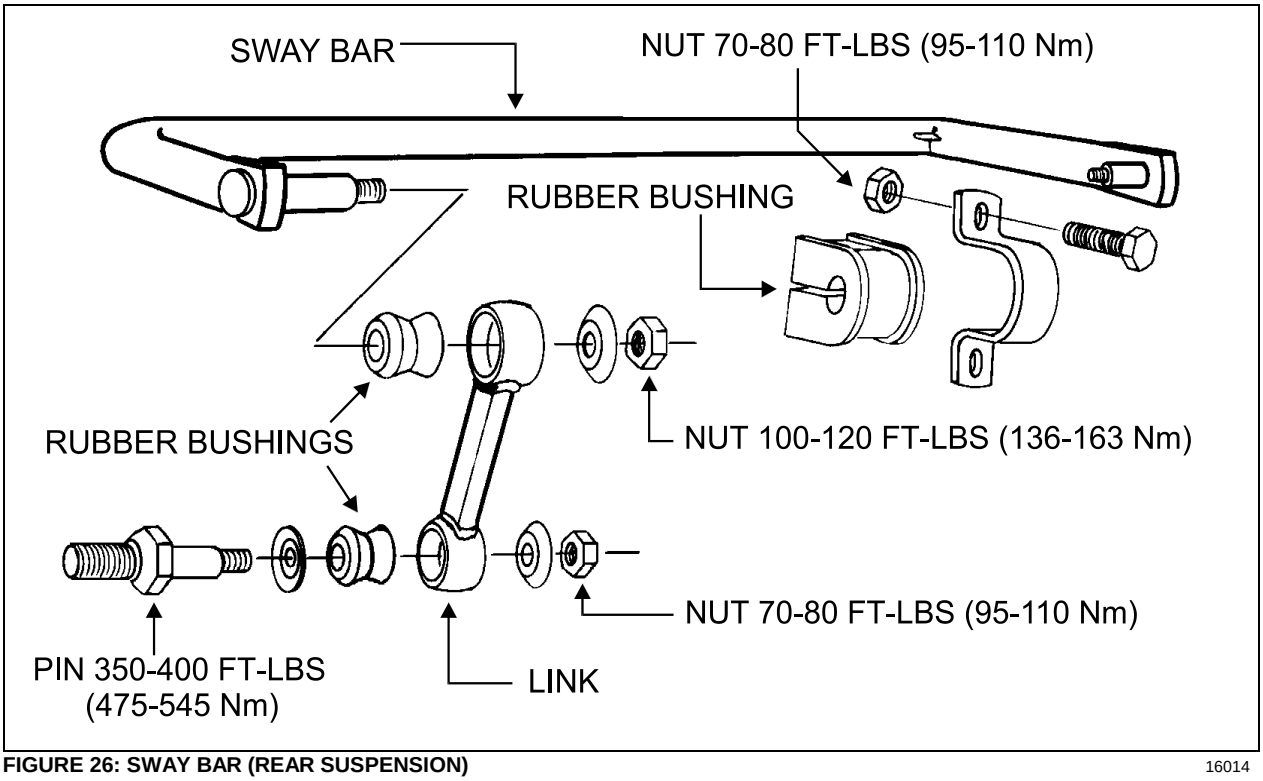

FIGURE 26: SWAY BAR (REAR SUSPENSION) 16014

11. INDEPENDENT FRONT SUSPENSION ADJUSTMENT

Converted coach shells are equipped with "LEVEL-LOW" leveling system. The purpose of the "LEVEL-LOW" is to adjust suspension in three separate points (front, rear right and rear left air springs) in order to level vehicle body. Three height control valves, automatically control air pressure in the three separate points (air springs) and maintains a constant vehicle height regardless of load, or load distribution. The control solenoid valve supplies air to the five way three-position air control valve, which bypasses the height control valve, and opens a passage to allow the air control and exhaust valve to release/supply air from airs springs. To improve road comfort, an expansion air tank is installed in series with each air springs.

In addition to the above suspension components the system also includes: sway bar, upper and lower suspensions, bars and shock absorbers (Fig. 1).

NOTE
Only for preliminary adjustment, refer to figure 20. Torque rod length must be fixed to 21 17/64" (540 mm) and relay rod to 23 19/64" (592 mm).

⚠ CAUTION ⚠
Parts must be replaced by ones with the same part numbers or with equivalent parts, if replacement becomes necessary. Do not use parts of lesser quality or substitute design. Torque values must be used as specified during reassembly to assure proper retention of these parts.

12. SUSPENSION HEIGHT ADJUSTMENT

The flow of pressurized air from the accessory air tank to the air springs is controlled by three height control valves. The two rear valves are mounted to the subframe and connected to the rear axles through an arm and link connection. The front valve is mounted to the subframe and connected to the front air tank support (Fig. 27). These connections allow the valves to apportion air pressure in the springs to the vehicle load, maintaining normal ride height.

Immediate response height control valves increase or decrease the air pressure in the suspension system as required. One height control valve is located **at center of front sway bar**, and regulates air to front suspension air springs in order to maintain the vehicle at the required height. Two are located at the drive axle, one on each inner side of rear wheelhousing.

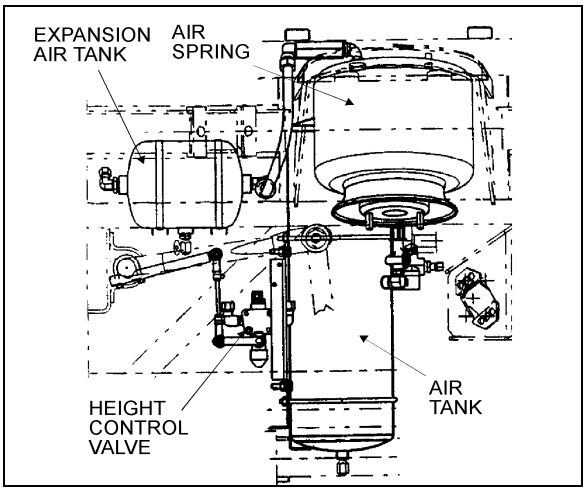

FIGURE 27: HEIGHT CONTROL VALVE LOCATION 16057

The appropriate vehicle body height is obtained by measuring the clearance of all the air springs installed on the vehicle. The two front air springs clearance should be 11 ± ¼“ (279 ± 6 mm). Refer to figure 28 to identify the correct area to take measurement. The rear air springs clearance should be 11 ½ ± ¼" (292 ± 6 mm) (refer to Maintenance Manual, Section 16, under "Suspension Height Adjustment" for rear height control valves' adjustment). At this point, it should not be necessary to make an adjustment under normal service conditions. However, if an adjustment is required, change the position of the overtravel lever in relation to the overtravel control body. The lever should be moved up to raise vehicle height, and down to lower it. Check that main air pressure is at normal operating pressure and raise the vehicle to the specified height.

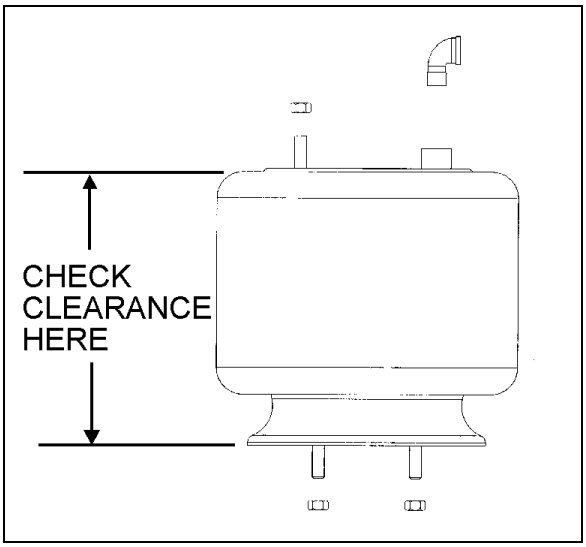

FIGURE 28: TYPICAL AIR SPRING CLEARANCE 16058

⚠ CAUTION ⚠

Always adjust on "fill cycle". If it is necessary to lower vehicle height, release sufficient air to be well below height, and adjust to height or fill cycle.

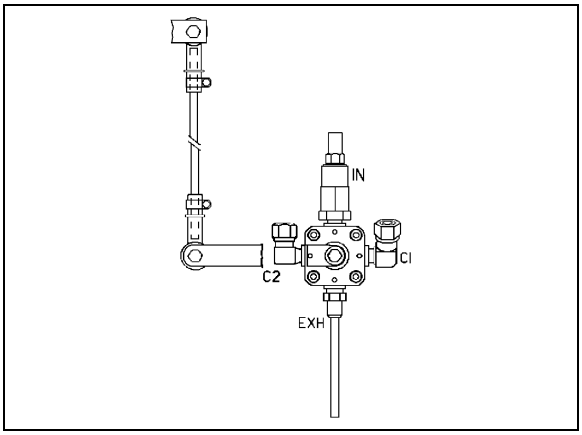

FIGURE 29: FRONT HEIGHT CONTROL VALVE 16100

The normal ride height is obtained by adjusting air spring clearance of both front and rear suspension as follows:

Front air spring clearance

1. With the vehicle at normal operating air pressure (100 - 125 psi (689 - 860 kPa)), measure air spring clearance. This clearance should be 11 ± ¼" (279 ± 6 mm).

NOTE

The measurement should be taken from underneath the upper air spring support on subframe to top of the lower air spring support on axle (refer to figure 28 for more details). If adjustment is required, begin with the drive axle.

2. Loosen the clamp on the height control valve rubber coupling and bring it up or down (Fig. 29).

NOTE

Allow suspension to stabilize before taking reading.

When the desired height is obtained, tighten clamp.

Rear air springs clearance

Refer to XL2 Maintenance Manual, Section 16, under "Suspension Height Adjustment".

13. HEIGHT CONTROL VALVE

The height control valves automatically add air to, or release air from air springs to maintain constant suspension height regardless of load, or load distribution. Each valve adjusts independently according to the following conditions:

13.1 LOADING POSITION

As the load increases and lowers the vehicle body, the overtravel lever commands the height control valve to add air to air springs.

13.2 NEUTRAL POSITION

When vehicle body reaches the normal ride height, the height control valve overtravel lever reaches the "neutral" position and keeps both the supply and exhaust ports closed to ensure normal ride height is maintained. This condition remains static until the vehicle load is altered.

13.3 UNLOADING POSITION

As the load decreases and raises the vehicle body, the overtravel lever commands the height control valve to release air from air springs.

13.4 MAINTENANCE

The height control valve requires no periodic maintenance. Height control valve linkage operates on rubber bushings and no lubrication should be attempted at this location. Inspect the valve for loose joints, air leaks and worn bushings.

13.5 REMOVAL AND INSTALLATION

Before disconnecting a height control valve air line, securely support the vehicle by its jacking points on the body, and place safety supports underneath body. Refer to paragraph *"16. Vehicle Jacking Points"* in Section 18, *"Body"*.

1. Exhaust air from air system by opening all air tank drain cocks. Remove height control valves.
2. Disconnect overtravel lever from link and pull down lever to exhaust remaining air from air springs.
3. Disconnect air supply and delivery lines from the height control valve. Cover line ends with tape to prevent entry of foreign matter.
4. Remove the nuts retaining the height control valve to the mounting bracket, then remove valve assembly.

Reverse removal procedure to replace height control valve. After installation, check for leakage using a soap and water solution.

14. "LEVEL-LOW" LEVELING SYSTEM

The purpose of the *"level-low"* leveling system is to adjust suspension in three separate points (front, rear right and rear left) in order to level vehicle body. This system can be put into service when the ignition key is turned to the *"ON"* position, and must be used only when the parking brake is applied. The *"level-low"* warning light on the dashboard indicates that the selector switch is not in the *"OFF"* position. Level low system controls are located on L.H. side control panel.

14.1 PRINCIPLES OF OPERATION

DOWN:

The (front/rear right/rear left) control solenoid valve supplies air to the (front/rear right/rear left) five-way three-position air control valve, which bypasses the (front/rear right/rear left) height control valve, and opens a passage to allow the air control and exhaust valve to release air from (front/rear right/rear left) air springs.

UP:

The (front/rear right/rear left) control solenoid valve supplies air to the (front/rear right/rear left) five-way three-position air control valve, which bypasses the (front/rear right/rear left) height control valve, and opens a passage to allow the air control and exhaust valve to supply air to (front/rear right/rear left) air springs.

DRIVE:

When the ignition key is turned to the *"ON"* position with selector knob in the *"DRIVE"* position, the drive control solenoid valve supplies air to all five-way three-position air control valves, each one opening a passage to allow height control valves to accomplish their function.

When the ignition key is turned to the *"OFF"* position and selector knob to the *"DRIVE"* position, the air is entrapped between air springs and five-way three-position air control valves to ensure the adjusted level will be kept.

⚠ WARNING ⚠

Never move vehicle with selector knob in any other position than the "DRIVE" position.

14.2 MAINTENANCE

Since the kneeling action is issued from both the air system and electrical system, refer to Section: 12, *"Brake and Air System"* and Section 06, *"Electrical System*".

For diagnosis and understanding of the system, refer to wiring diagrams, and to the appropriate air system schematic diagram annexed to Section 12, *"Brake and Air System"*.

15. AIR SYSTEM

The basic air system consists of an air compressor, tanks, valves, filters and interconnecting lines and hoses (refer to Section 12, "Brake and Air System" for complete information). It provides a means for braking, operating controls and accessories, and suspension. An air system schematic diagram is annexed at the end of this supplement for better understanding of the system.

The air coming from the air dryer is first directed to the wet air tank, then to the primary (for the primary brake system), secondary (for the secondary brake system), and accessory (for the pneumatic accessories) air tanks (Fig. 30).

In addition, an expansion air tank is installed in series with each air spring.

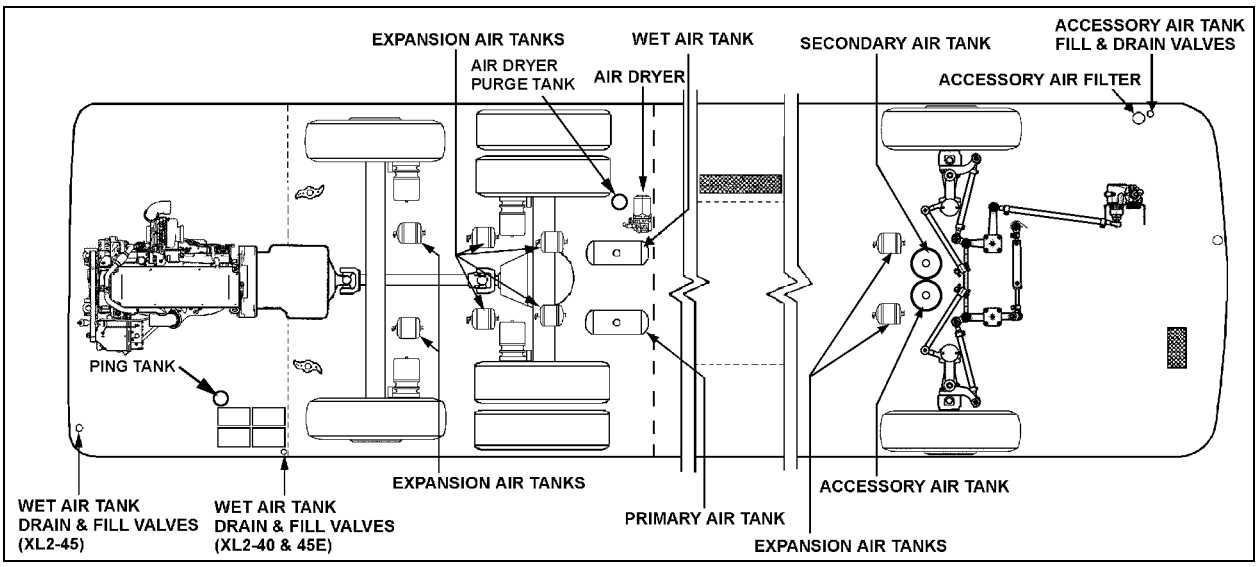

FIGURE 30: LOCATION OF AIR TANKS 24007

15.1 AIR TANK MAINTENANCE

Ensure that the accessory air tank is purged during pre-starting inspection. A good practice is to purge this tank at the end of every driving day by the remote air tank drain valve located in the steering compartment (Fig. 30).

Moreover, purge all tanks by their bottom drain valves at specified intervals.

15.1.1 Wet Air Tank

This tank is installed above L.H. wheel of drive axle, and is provided with a bottom drain valve. It is recommended to **purge** the wet air tank by its bottom drain valve every 12,500 miles (20 000 km), or once a year, whichever comes first.

A remote valve located in engine compartment and accessible through engine R.H. side door is used to **drain** the air dryer (Fig. 31).

15.1.2 Primary Air Tank

The primary air tank is located above R.H. wheel of drive axle.

This tank is provided with a bottom drain valve (Fig. 30). It is recommended to purge the primary air tank by its bottom drain valve every 12,500 miles (20 000 km) or once a year, whichever comes first.

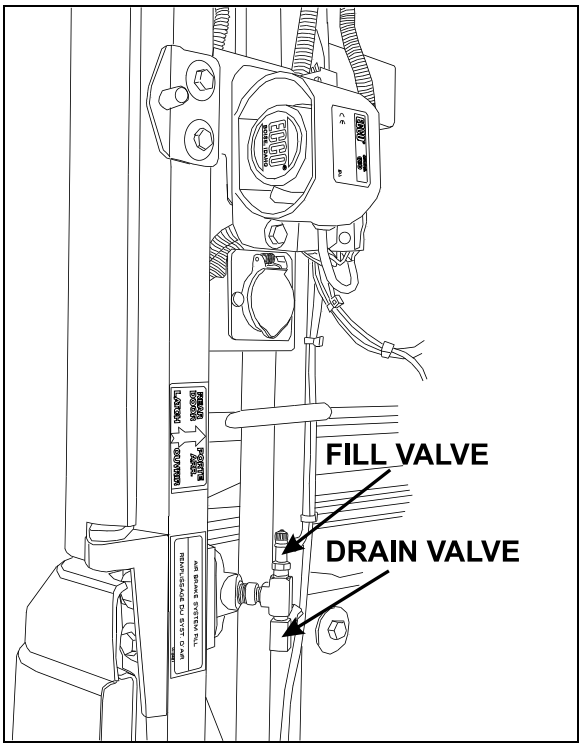

FIGURE 31: REAR VALVE LOCATION 12202

15.1.3 Secondary Air Tank

This tank is located in front wheelhousing, between air springs. The tank is installed vertically and is provided with a bottom drain valve (Fig. 30).

It is recommended to purge the tank by its bottom drain valve, every 12,500 miles (20 000 km) or once a year, whichever comes first.

15.1.4 Accessory Air Tank

The accessory air tank is installed next to the secondary air tank. The tank is installed vertically and is provided with a bottom drain valve (Fig. 30).

It is recommended to purge the tank by its bottom drain valve, every 12,500 miles (20 000 km) or once a year, whichever comes first.

A remote drain valve is located in front service compartment (Fig. 32) underneath the accessory air filter. Refer to Section 12, paragraph "4. Accessory Air Filter" of the maintenance manual for daily purge procedure.

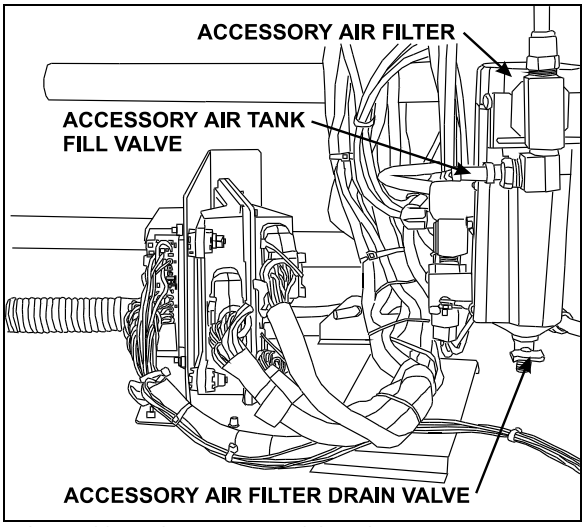

FIGURE 32: FRONT VALVE LOCATION 12201

15.1.5 Expansion Air Tank

Two expansion tanks are located in front wheelhousing. These air tanks are located behind secondary and accessory air tank. Also, six expansion tanks are located near rear air springs (Fig. 30). Expansion tanks are connected in series with air springs. Expansion tanks are used to lower the stiffness of the air spring. They are provided with a bottom drain valve.

It is recommended to purge them, with all other tanks, every 12,500 miles (20 000 km) or once a year, whichever comes first.

15.2 EMERGENCY FILL VALVES

The vehicle is equipped with two air system emergency fill valves to supplement the air system when air pressure is low and engine cannot be operated.

The rear valve is located in engine compartment and accessible from engine R.H. side door (Fig. 31).

⚠ CAUTION ⚠

No other point should be used to supply air system. The maximum allowable air pressure is 125 psi (860 kPa).

The front valve is located in the front service compartment close to accessory air filter (Fig. 32).

These two air valves are fitted with the same valve stems as standard tires, and can be filled by any standard external air supply line.

The rear valve will supply air for all systems (brakes, suspension and accessories) while the front valve will supply air for accessories only.

⚠ CAUTION ⚠

Air filled through these two points will pass through the standard air filtering system provided by Prévost. Do not fill air through any other points.

16. HUB UNIT AND SWIVEL ASSEMBLY

Refer to “DANA SPICER Service Manual General Information, Maintenance Manual Model NDS and Maintenance Manual NDS Axles” annexed to section 10 *"Front Axle".*

17. TORQUE TABLE

DESCRIPTION	QTY	REFERENCE	TORQUE (DRY) Lbf-ft / Nm	
Pitman Arm to Steering Gear Fixing Nut	1	8	400-450	545-610
Drag Link to Pitman Arm Stud Nut*	1	---	160-215	220-290
Drag Link to Bell crank Stud Nut*	1	---	160-215	220-290
Drag Link Socket End Clamp Bolt Nut	2	---	40-60	55-80
Relay Rod to Bell crank Stud Nut*	1	---	160-215	220-290
Relay Rod to Idler Arm Stud Nut*	1	5	160-215	220-290
Tie Rod to Bell crank Stud Nut*	1	---	160-215	220-290
Tie Rod to Idler Arm Stud Nut*	1	5	160-215	220-290
Tie Rod to Steering Arm Stud Nut*	2	3	160-215	220-290
Tie Rod End Clamp Bolt Nut	4	3	40-60	55-80
Steering Arm to Swivel Nut*	4	---	190	260
Torque Rod Stud Nut	2	4	160-215	220-290
Idler Arm and Bell Crank Cap Screws	8	9	8	11
Torque Rod Mounting Bracket Nut	4	6	75-140	100-190
Torque Rod Clamp Nut	4	4	53-59	72-80
Jacking Point Bracket Nut	8	19	70-80	95-110
Bushing Collar Nut	8	20	72-88	98-120
Sway Bar Link Upper Nuts (Rear Suspension)	2	20	100-120	135-160
Sway Bar Link Lower Nuts (Rear Suspension)	2	20	70-80	95-110

DESCRIPTION	QTY	REFERENCE	TORQUE (Lubricated) (Anti-Seize #680064) Lbf-ft / Nm	
Idler Arm and Bell Crank Mounting Bracket Nut	8	5	90-120	120-160
Shock Absorber Mounting Stud Nut	2	19	40-50	55-70
Shock Absorber Pin Nut	2	19	70-85	95-115
Air Spring Nut	3	18	20-25	27-34
Sway Bar Link Upper and Lower Nuts (Front Suspension)	2	20	120-140	160-190
Upper A-Arm Stud Nut*	2	18	230-245	315-335
Lower A-Arm Bracket Nut	8	18	375-425	510-580

DESCRIPTION	QTY	REFERENCE	TORQUE (Lubricated) (Loctite #242 Blue) Lbf-ft / Nm	
Shock Absorber Pin	2	19	350-400	475-545
Steering Gear to Mounting Bracket Bolt	5	8	355	485

- **Tighten nut to specified torque, then advance to next aligning cotter pin slot and install a new cotter pin.**

18. SPECIFICATIONS

Front Axle Air Springs

Make ..... Goodyear Tire and Rubber
Diameter ..... 14.5 inches
Air Inlet ..... 1/2''- 14 NPTF
Supplier number 1R14-167
Prévost number 630239

Shock Absorbers

Collapsed length ..... 350 mm
Extended Length ..... 560 mm
Supplier number 481700000208
Prévost number 630251

Height Control Valve

Make ..... Barksdale
Supplier number ..... 52321POAQ3-Q26 and 52321POAQ3-Q62
Prévost number ..... 630156 and 630157

Steering Gear Box

Make ..... ZF-Servocom
Supplier number 8098-988-570
Prévost number 661045

Steering Gear Box (Optional)

Make ..... ZF-Servocomtronic
Supplier number 8098-988-571
Prévost number 661044

Power Steering Hydraulic Pump

Make ..... TRW
Supplier number PS251616L10200
Prévost number 661070

Power Steering Hydraulic Cylinder

Make ..... Hyco
Supplier number 007-0300-0
Prévost number 661076

Shim (Camber Adjustment)

Thickness ..... 3.175 mm
Prévost number 160993
Thickness ..... 6.35 mm
Prévost number 160992

Sway bar bushing (Drive Axle)

Make ..... Prévost
Prévost number 130953

SECTION 18: BODY

CONTENTS

1. VEHICLE EXTERIOR 18-5

2. STRUCTURE 18-9

3. EXTERIOR MAINTENANCE 18-9

3.1 CORROSION PREVENTION 18-9
3.2 PREVENTIVE MAINTENANCE SCHEDULE 18-10
3.3 RUST INHIBITOR APPLICATION 18-10

4. FIBERGLASS REPAIR 18-15

4.1 REPAIR USING FIBERGLASS CLOTH 18-15
4.2 REPAIR USING FIBERGLASS PASTE 18-15
4.3 TYPICAL FIBERGLASS REPAIR PROCEDURE 18-16

5. PAINTING 18-17

5.1 NEW PAINT CARE 18-17
5.2 PAINT TOUCHUP 18-17
5.3 PAINTING 18-18
5.3.1 Safety 18-18
5.3.2 Surface Preparation And Paint Application 18-18

6. BODY REPAIR 18-19

6.1 FRONT FACE 18-19
6.1.1 Front Face Body Panel And Molding 18-19
6.1.2 Spare Wheel Compartment Door Body Panel 18-23
6.1.3 Windshield 18-23
6.2 ENTRANCE DOOR OR FRONT SERVICE DOOR BODY PANEL 18-25
6.2.1 Entrance Door Or Front Service Door Lower Body Panel 18-26
6.3 BAGGAGE COMPARTMENT OR REAR SERVICE COMPARTMENT DOOR BODY PANEL 18-27
6.4 MTH SIDE PANEL REPLACEMENT PROCEDURE 18-30
6.5 LATERAL FIXED WINDOW 18-44
6.6 DRIVER'S WINDOW AND UPPER LATERAL WINDOW 18-45
6.7 ENGINE COMPARTMENT DOOR BODY PANEL 18-47

7. ENTRANCE DOOR 18-49

7.1 COACH ENTRANCE DOOR 18-49
7.1.1 Operation 18-49
7.1.2 Emergency Exit Valves 18-50
7.1.3 Door Cycle Speed Adjustment 18-50
7.1.4 Horizontal And Vertical Adjustment 18-51
7.1.5 Seal Compression Adjustment 18-51
7.1.6 Door Seal Replacement 18-52
7.1.7 Troubleshooting 18-53
7.1.8 Lubrication 18-54
7.2 ENTRANCE DOOR (MTH) 18-54
7.2.1 Keyless Entry System 18-54
7.2.2 Door Adjustment 18-54
7.2.3 Horizontal And Vertical Adjustments 18-54
7.2.4 Seal Compression Adjustment 18-54
7.2.5 Door Seal Replacement 18-55
7.2.6 Door Lubrication 18-55

7.2.7 Door Latch Mechanism 18-55

8. BUMPER REMOVAL AND INSTALLATION 18-55

8.1 FRONT BUMPER 18-55
8.2 REAR BUMPER REMOVAL 18-56

9. DRIVER'S OR ENTRANCE DOOR POWER WINDOW 18-56

9.1 DRIVER'S POWER WINDOW 18-56
9.1.1 Window Removal And Installation 18-56
9.1.2 Regulator Removal And Installation 18-56
9.2 ENTRANCE DOOR POWER WINDOW 18-57
9.2.1 Window Removal And Installation 18-57
9.2.2 Regulator Removal And Installation 18-57

10. ROOF ESCAPE HATCH 18-57

10.1 REPAIR 18-58
10.2 SEALING 18-58
10.3 ESCAPE HATCH PANEL ASSEMBLY 18-58
10.4 ESCAPE HATCH FRAME 18-59

11. PASSENGER SEATS 18-59

11.1 ROTATING SEATS 18-59
11.2 REMOVING FIXED SEATS 18-59
11.3 UPHOLSTERY MAINTENANCE 18-60
11.3.1 Routine Cleaning 18-60
11.3.2 Dry Cleaning 18-60
11.3.3 Cleaning With Covers In Place 18-60

12. TARABUS FLOOR COVERING REPAIR OR REPLACEMENT 18-61

12.1 FRONT STEPS REPLACEMENT PROCEDURE 18-63
12.2 WELDING OF JOINT BETWEEN WHITE SAFETY STRIP AND "TARABUS" FLOOR COVERING 18-66
12.3 REPAIR OF A WELDED JOINT 18-69

13. COACH SIDE WINDOWS 18-70

13.1 EMERGENCY EXIT WINDOWS 18-70
13.1.1 Emergency Exit Release Bar 18-70
13.1.2 Emergency Exit Window Adjustment 18-70
13.1.3 Emergency Exit Window Replacement 18-70

14. ELECTRIC AWNING WINDOW 18-71

14.1 OPERATION 18-71
14.2 WINDOW REMOVAL 18-71
14.3 ACTUATOR REPLACEMENT 18-73
14.4 MOTOR REPLACEMENT 18-73

15. BODY PANELS AND DOORS 18-75

16. BAGGAGE COMPARTMENT DOORS 18-75

16.1 DOOR REMOVAL 18-75
16.2 PANTOGRAPH ARMS REMOVAL AND INSTALLATION 18-75
16.3 DOOR INSTALLATION 18-75

17. ENGINE COMPARTMENT DOORS 18-76

18. RADIATOR DOOR ADJUSTMENT 18-76

19. ENGINE COMPARTMENT R. H. SIDE DOOR 18-77

20. CONDENSER DOOR ADJUSTMENT 18-77

21. EVAPORATOR DOOR ADJUSTMENT 18-78

22. FUEL FILLER DOOR 18-78

23. FRONT SERVICE COMPARTMENT DOOR 18-78

24. L.H. SIDE REAR SERVICE COMPARTMENT DOOR 18-78

25. R.H. SIDE REAR SERVICE COMPARTMENT OR MAIN POWER COMPARTMENT DOOR .. 18-79

26. FENDERS 18-79

27. REAR CAP 18-79

28. FRONT CAP 18-80

29. XL2 SMOOTH SIDE PANEL REPLACEMENT PROCEDURE 18-79

30. REAR VIEW MIRRORS (RAMCO) 18-85

30.1 ADJUSTMENT 18-86
30.2 DISASSEMBLY 18-86
30.3 ASSEMBLY 18-86
30.4 REPLACEMENT OF MIRROR GLASS 18-86
30.5 HEATED / REMOTE CONTROLLED REAR VIEW MIRRORS 18-86
30.5.1 Mirror Control 18-86
30.5.2 Disassembly 18-87
30.5.3 Assembly 18-87
30.5.4 Convex & Flat Mirror Removal 18-87

31. VEHICLE JACKING POINTS 18-87

31.1 HYDRAULIC JACK 18-88

32. TOWING THE VEHICLE 18-88

32.1 LIFTING AND TOWING 18-89
32.2 TOWING WITHOUT LIFTING 18-89

33. SPECIFICATIONS 18-91

ILLUSTRATIONS

FIGURE 1: XL2-40 CONVERTED VEHICLE EXTERIOR VIEW (TYPICAL) 18-5
FIGURE 2: XL2-45 CONVERTED VEHICLE EXTERIOR VIEW (TYPICAL) 18-6
FIGURE 3: XL2-45E CONVERTED VEHICLE EXTERIOR VIEW (TYPICAL) 18-7
FIGURE 4: XL2-45 COACH EXTERIOR VIEW (TYPICAL) 18-8
FIGURE 5: FIBERGLASS REPAIR 18-16
FIGURE 6: FIBERGLASS REPAIR 18-16

FIGURE 7: FIBERGLASS REPAIR 18-16
FIGURE 8: FIBERGLASS REPAIR 18-17
FIGURE 9: FIBERGLASS REPAIR 18-17
FIGURE 10: VIEW OF FRONT FACE 18-19
FIGURE 11: WINDSHIELD INSTALLATION USING ROPE 18-24
FIGURE 12: APPLICATION 0F SIKA 221 BLACK 18-25
FIGURE 13: ENTRANCE DOOR BODY PANEL 18-25
FIGURE 14: GLUING JIG SETUP DIAGRAM 18-29
FIGURE 15: DRIVER'S OR UPPER LATERAL WINDOW 18-46
FIGURE 16: DOOR CYLINDER AND DAMPER 18-49
FIGURE 17: COACH ENTRANCE DOOR 18-49
FIGURE 18: ENTRANCE DOOR CONTROL SWITCH 18-50
FIGURE 19: EMERGENCY EXIT VALVE 18-50
FIGURE 20: DAMPER 18-51
FIGURE 21: UPPER DOOR HINGE 18-51
FIGURE 22: SEAL COMPRESSION ADJUSTMENT 18-52
FIGURE 23: ENTRANCE DOOR (MTH) 18-54
FIGURE 24: ENTRANCE DOOR (MTH, TYPICAL) 18-55
FIGURE 25: FRONT BUMPER RELEASE HANDLE 18-56
FIGURE 26: FRONT BUMPER 18-56
FIGURE 27: FRONT BUMPER REMOVAL 18-56
FIGURE 28: REAR BUMPER 18-56
FIGURE 29: DRIVER'S POWER WINDOW 18-57
FIGURE 30: ENTRANCE DOOR POWER WINDOW 18-57
FIGURE 31: ESCAPE HATCH 18-58
FIGURE 32: ESCAPE HATCH 18-58
FIGURE 33: ARMREST 18-60
FIGURE 34: SEAT PEDESTAL ASSEMBLY 18-60
FIGURE 35: TARABUS FLOOR COVERING ADHESIVE APPLICATION 18-62
FIGURE 36: APPLICATION OF SIKA 221 GRAY 18-62
FIGURE 37: XL2-45 COACH 18-70
FIGURE 38: EMERGENCY EXIT WINDOW 18-70
FIGURE 39: ELECTRIC AWNING WINDOW EXPLODED VIEW (FRAME) 18-72
FIGURE 40: ELECTRIC AWNING WINDOW EXPLODED VIEW (SASH) 18-73
FIGURE 41: BAGGAGE COMPARTMENT DOOR 18-75
FIGURE 42: BAGGAGE DOOR CATCH STRIKER 18-76
FIGURE 43: ENGINE COMPARTMENT DOORS 18-76
FIGURE 44: RADIATOR DOOR 18-77
FIGURE 45: ENGINE COMPARTMENT R. H. SIDE DOOR 18-77
FIGURE 46: CONDENSER DOOR 18-78
FIGURE 47: EVAPORATOR DOOR 18-78
FIGURE 48: FUEL FILLER DOOR 18-78
FIGURE 49: L.H. SIDE REAR SERVICE COMPARTMENT DOOR 18-79
FIGURE 50: R.H. SIDE REAR SERVICE COMPARTMENT OR MAIN POWER COMPARTMENT DOOR 18-79
FIGURE 51: REAR VIEW MIRROR (RAMCO) 18-86
FIGURE 52: JACKING POINTS ON FRAME 18-87
FIGURE 53: FRONT SUBFRAME JACKING POINTS 18-87
FIGURE 54: REAR SUBFRAME JACKING POINTS 18-87
FIGURE 55: JACKING POINTS ON IND. SUSPENSION 18-88
FIGURE 56: JACKING POINTS ON FRONT AXLE 18-88
FIGURE 57: JACKING POINTS ON DRIVE AXLE 18-88
FIGURE 58: JACKING POINTS ON TAG AXLE 18-88
FIGURE 59: TOW EYES 18-90

1. VEHICLE EXTERIOR

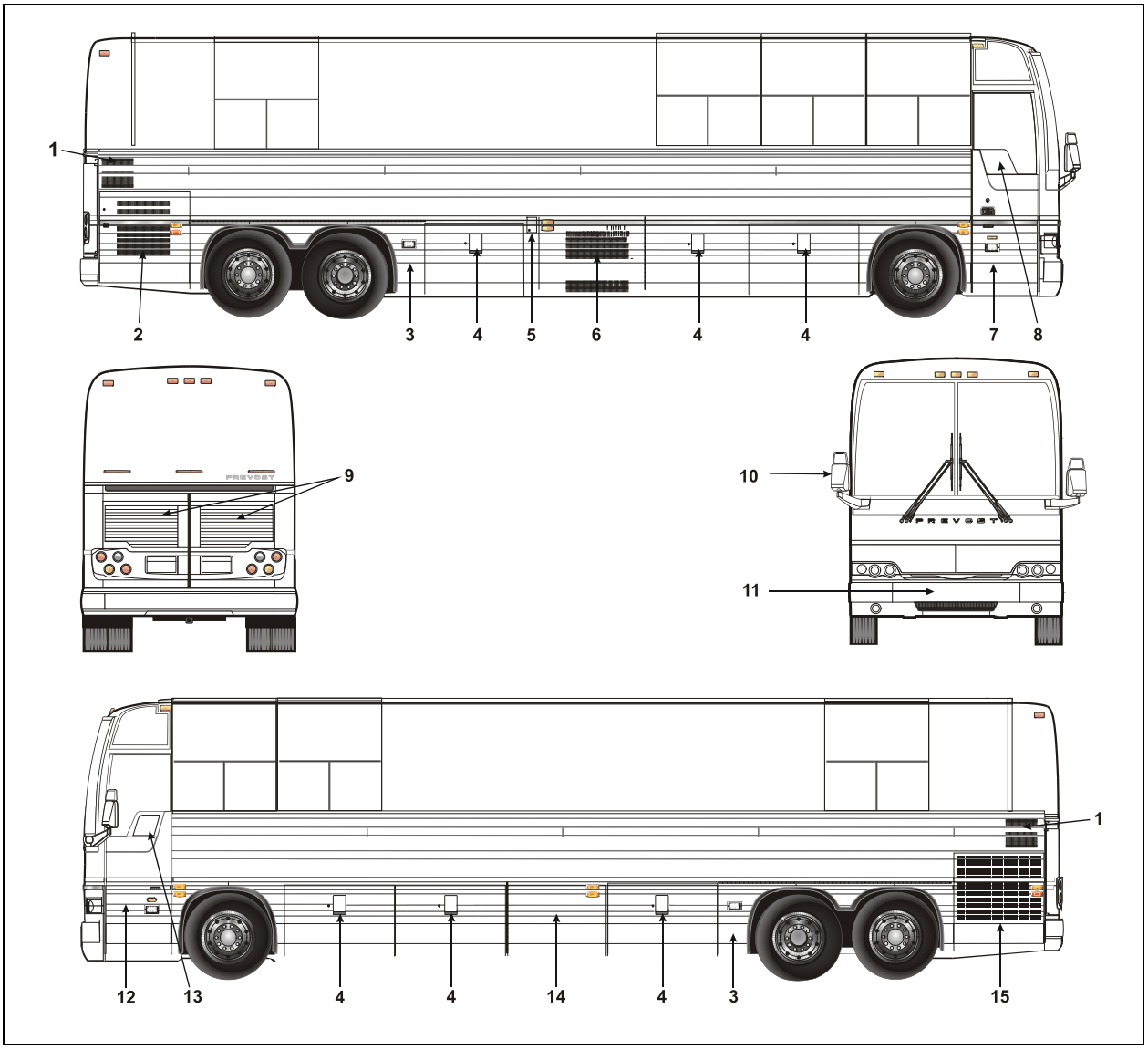

FIGURE 1: XL2-40 CONVERTED VEHICLE EXTERIOR VIEW (TYPICAL)

1. Engine air intake duct
2. Engine compartment R.H. side door
3. Hinged rear fender
4. Baggage compartment
5. Fuel filler door
6. Condenser compartment or Baggage compartment
7. Entrance door
8. Entrance door power window
9. Engine compartment rear doors
10. Rear-view mirror
11. Reclining bumper
12. Front service compartment
13. Driver's power window
14. Evaporator compartment or Baggage compartment
15. Radiator door

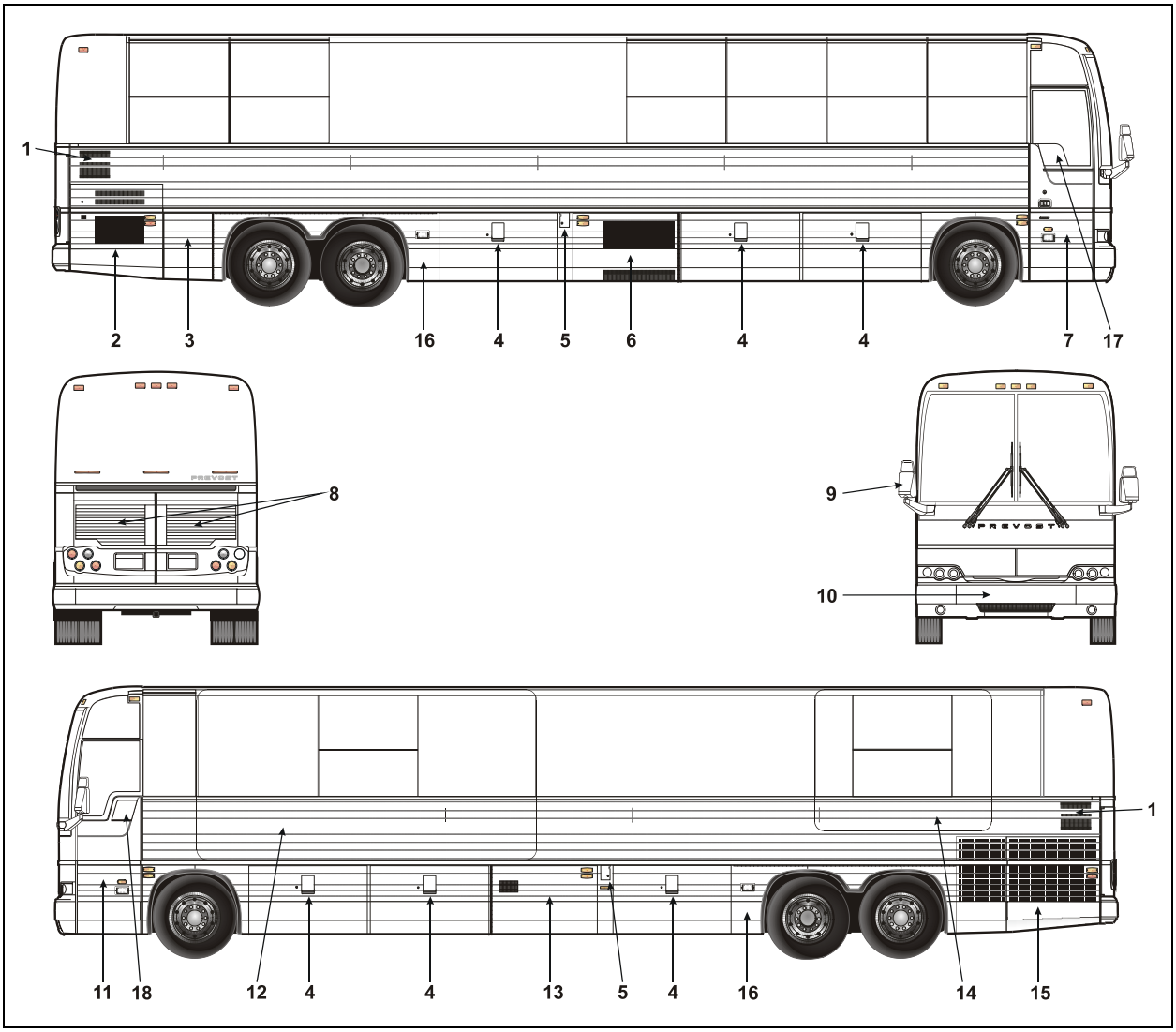

FIGURE 2: XL2-45 CONVERTED VEHICLE EXTERIOR VIEW (TYPICAL) 18362

1. Engine air intake duct
2. Engine compartment R.H. side door
3. R.H. side rear service compartment
4. Baggage compartment
5. Fuel filler door
6. Condenser compartment or Baggage compartment
7. Entrance door
8. Engine compartment rear doors
9. Rear-view mirror
10. Reclining bumper
11. Front service compartment
12. Front Slide-Out (Optional)
13. Evaporator compartment or Baggage compartment and access to Slide-out electrical panel
14. Rear Slide-Out (Optional)
15. Radiator door
16. Hinged rear fender
17. Entrance door power window
18. Driver's power window

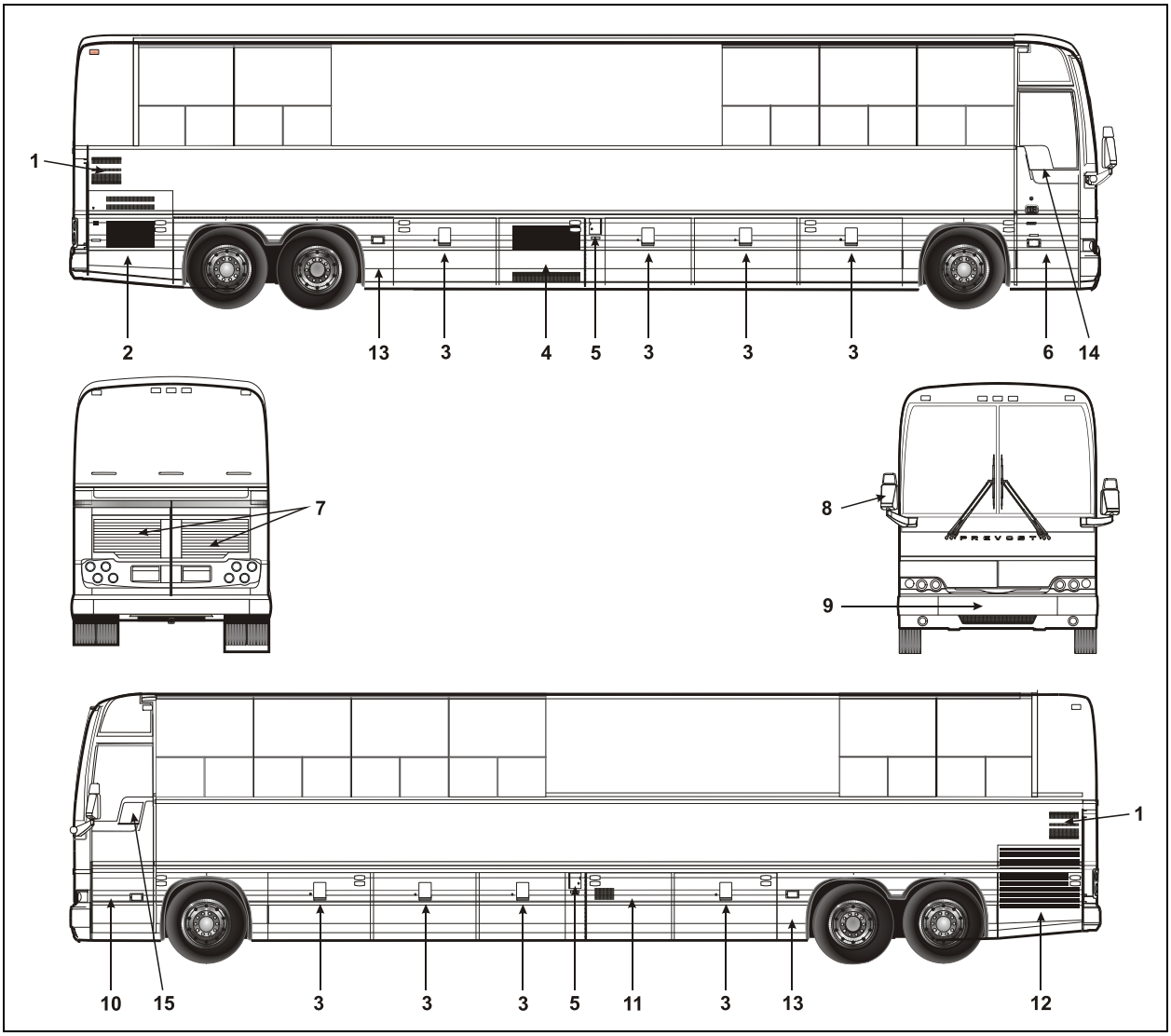

FIGURE 3: XL2-45E CONVERTED VEHICLE EXTERIOR VIEW (TYPICAL) 18369

1. Engine compartment R.H. side door
2. Engine air intake duct
3. Baggage compartment
4. Fuel filler door
5. Condenser compartment or Baggage compartment
6. Entrance door
7. Engine compartment rear doors
8. Rear-view mirror
9. Reclining bumper
10. Front service compartment
11. Evaporator compartment or Baggage compartment
12. Radiator door
13. Hinged rear fender
14. Entrance door power window
15. Driver's power window

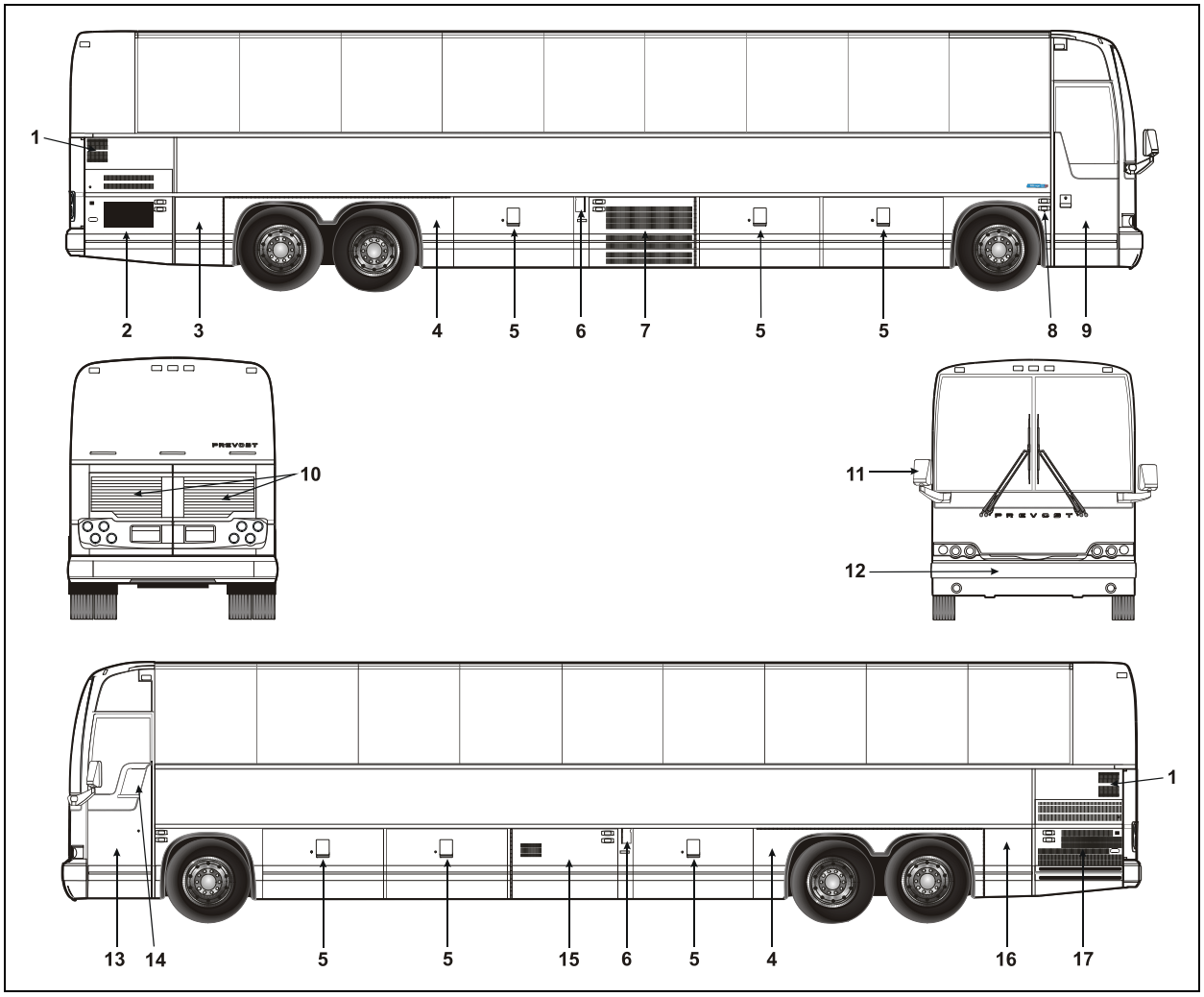

FIGURE 4: XL2-45 COACH EXTERIOR VIEW (TYPICAL) 18367

1. Engine air intake duct
2. Engine compartment R.H. side door
3. Main Power compartment
4. Hinged rear fender
5. Baggage compartment
6. Fuel filler door
7. Condenser compartment
8. Entrance door control switch
9. Entrance door
10. Engine compartment rear doors
11. Rear-view mirror
12. Reclining bumper
13. Front service compartment
14. Driver's power window
15. Evaporator compartment
16. L.H. Rear service compartment
17. Radiator door

2. STRUCTURE

The body of the XL2 vehicles is an integral structure made of 14, 16 and 18 gauge welded and braced high tensile steel and stainless steel members. All stainless exterior panels are glued to anti-corrosion coated members. The complete structure is protected against corrosion prior to assembly. The front and rear caps are made of molded fiberglass. The main roof is made of high tensile aluminum panels riveted to the roof structure. The floor is made of 2 layers of ½" (13 mm) thick plywood separated by a 1/8" (3 mm) insulation to reduce power train and road noises.

Welding

Since welding is a procedure that may be carried out either as specific instructions from Prévost or by an independent decision of the owner, the following information pertaining to welding should be read before beginning any welding procedure. The prohibitions and requirements outlined below must be followed during welding procedure:

1. Welding must be done only by a qualified and experienced person.
2. Adequate ground contacts and shields must be positioned as required to protect components from damage due to heat, contact by weld splatter, arcing, or other potentially damaging events associated with welding.
3. The following precautions are to be taken to protect the electronic control components. Refer to section 00, paragraph 3: “PRECAUTIONS TO BE OBSERVED BEFORE WELDING” in this manual.
4. Always wear the appropriate safety equipment.
5. Weld in clean and well ventilated area, and always have an appropriate fire extinguisher within your reach.

3. EXTERIOR MAINTENANCE

Regular washing to remove dust and dirt is recommended. See *"Operator's Manual"* for more details on washing and cleaning your vehicle.

3.1 CORROSION PREVENTION

Preventive maintenance is a key factor in avoiding corrosion and must be considered as part of the regular service intervals. The entire underside of the vehicle is sprayed with a heavy application of asphalt base undercoating.

The operating environment the vehicle is subjected to will largely influence the amount of dirt and corrosion that will accumulate over a given period. Corrosion is one of the most costly factors of part failure and shortened part life. It is, however, an item that can be controlled when it is conscientiously looked after and the proper steps are taken in a timely manner.

Certain areas of the coach are more vulnerable to corrosion than others, and it is these areas that should be addressed. For example, the rear baggage compartment bulkhead in the rear wheelhousing area contains many key components and should be examined regularly for corrosion. Other areas include the front wheelhousing area and the engine compartment.

Road splash will affect undercarriage, condenser coil and engine compartment. These areas must be thoroughly cleaned to remove dirt accumulations from flanges, channels and ledges. These places accumulate dirt and salt and hold it in direct contact with steel and aluminum surfaces. Use an understructure high pressure spray as part of a regular wash. Damaged undercoating or paint should be promptly repaired before corrosion can start.
Frequency of wash periods depends on operating conditions. During periods of exposure to salt, daily washing as described above is recommended. If underbody parts show evidence of rust or corrosion, treat as follows:

1. Remove dirt, grease and oil by solvent washing.
2. Remove corrosion as well as all loose coating by cleaning with a wire brush or sandblasting.

⚠ CAUTION ⚠

Sandblasting can be used for cleaning bulkheads, brackets and other structural members. It should not be used for exterior side paneling. Extreme care should be taken not to sandblast excessively.

3. Apply correct primer, paint and undercoating after removing all corrosion to prevent further damage.

3.2 PREVENTIVE MAINTENANCE SCHEDULE

NOTE
TECTYL 185 GW rust inhibitor may have been applied on your vehicle underbody as an option, if this is the case, follow this procedure thoroughly. For future application of product, refer to paragraph 3.3 in this section.

DESCRIPTION	INTERVALS		MAINTENANCE	CORRECTIVE ACTION	REFERENCE
	MONTHS	KM MILES			
BODY, EXTERNAL WINDOW FRAME	6	40 000 25 000	VISUALLY INSPECT SEALING BEADS CONDITION	REPAIR OR REPLACE SEALING BEADS IF NECESSARY	
VEHICLE UNDERBODY	12	100 000 60 000	USE A LOW PRESSURE SPRAY TO CLEAN UNDER-STRUCTURE AND VISUALLY INSPECT FOR CALCIUM DEPOSIT, CORROSION OR ANY DIRT ACCUMULATED ONTO EXPOSED SURFACES. VISUALLY INSPECT SEALING BEADS CONDITION. VISUALLY INSPECT IF UNDERFLOOR IS PEALING. VISUALLY INSPECT WHEELHOUSING COATING. MAKE SURE DISCHARGE TUBES ARE FREE FROM OBSTRUCTIONS	APPLY UNDERCOATING LOCALLY AS NECESSARY. APPLY UNDERCOATING LOCALLY AS NECESSARY REMOVE ANY OBSTRUCTION OR REPLACE DEFECTIVE TUBE	
SUSPENSION AND UNDERSTRUCTURE	12	100 000 60 000	VERIFY THE CONDITION OF ALL SUSPENSION AND UNDERSTRUCTURE FASTENERS AND CLAMPS	TIGHTEN OR REPLACE DEFECTIVE OR MISSING FASTENERS	
FLOOR COVERING	3	20 000 12 500	VISUALLY INSPECT IF FLOOR COVERING IS SHOWING SIGNS OF DETERIORATION SUCH AS CUTS, BURNS, ETC. ALSO, VISUALLY INSPECT SEALANT ALONGSIDE TRACKS. INSPECT WALL PANELS FROM BOTTOM TO WINDOWS	REPAIR OR REPLACE DEFECTIVE COVERING. MAKE SURE PROPER SEALANT IS USED.	
FLOOR CLEANING			CLEAN FLOOR COVERING AS NECESSARY		

⚠ WARNING ⚠
Failure to follow this preventive maintenance schedule will result in warranty void.

3.3 RUST INHIBITOR APPLICATION

Material: Tectyl 185 GW
R1KG21

Safety Rules: Use safety glasses
Supplied air hood

Solvent-resistant rubber gloves

1.0 Wash both wheelhousing mechanical parts before masking.	A water-hose nozzle is recommended. Water may be hot to reduce washing time especially during winter. If parts are soiled with oil, clean using R1KG21. Avoid rubber parts.
2.0 Dry all water sprayed parts. Surface temperature and dew point must be respected before applying rust inhibitor.	Air pressure system may be used, refer to annex 1 for surface temperature and dew point.
3.0 **Front wheelhousing** a) Mask all rubber joints. Braking system must also be protected (refer to arrows). Commercial aluminum foil may be used for masking.	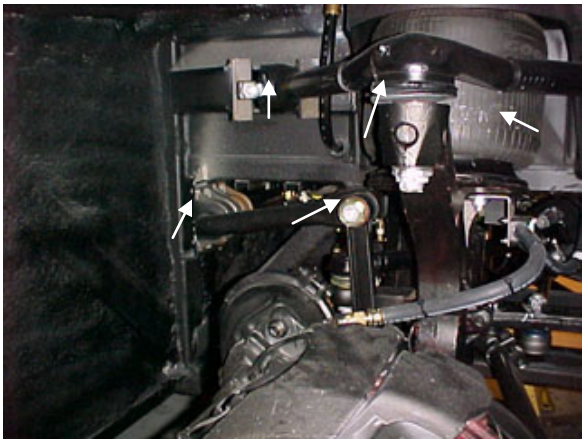
3.1 **Front wheelhousing** Front view	
3.2 **Front wheelhousing**	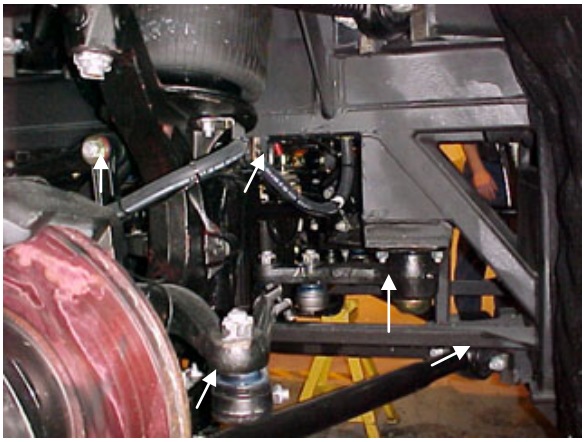

3.3 **Front wheelhousing**

(Entire braking system)

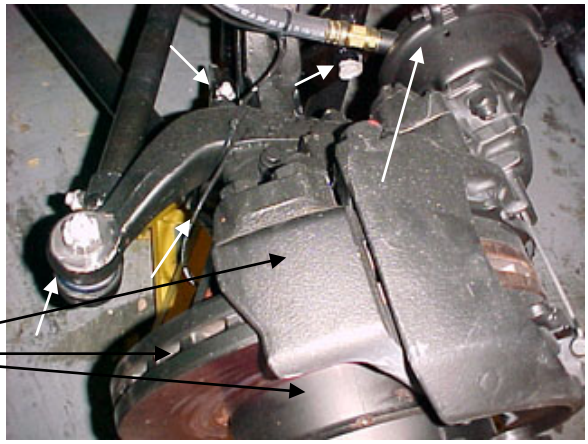

4.0 **Rear wheelhousing**

a) Mask all rubber joints. Braking system must also be protected (refer to arrows). Commercial aluminum foil may be used for masking

(Entire braking system)

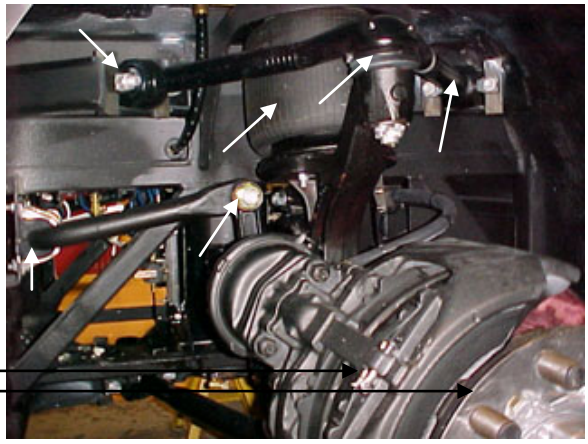

4.1 **Rear wheelhousing**

(Entire braking system)

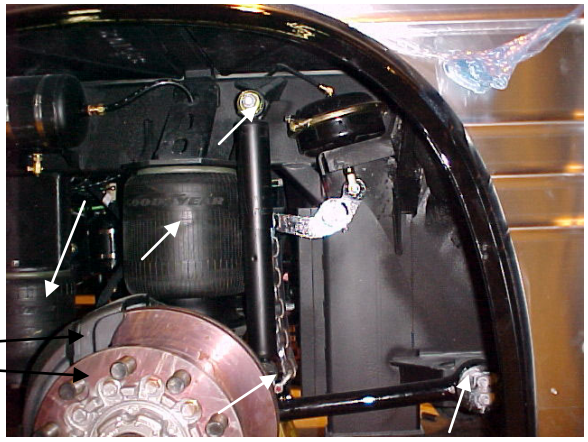

4.2 **Rear wheelhousing** (Entire braking system)	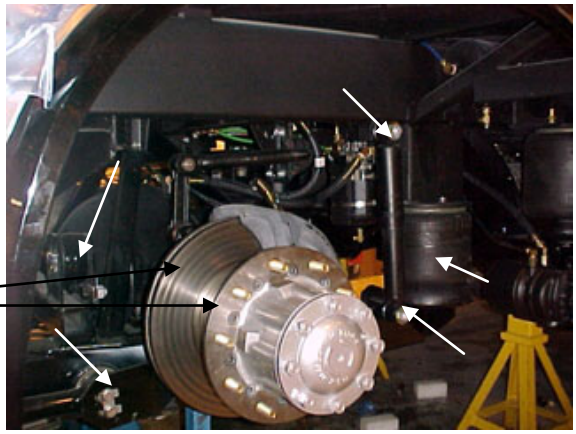
4.3 **Rear wheelhousing**	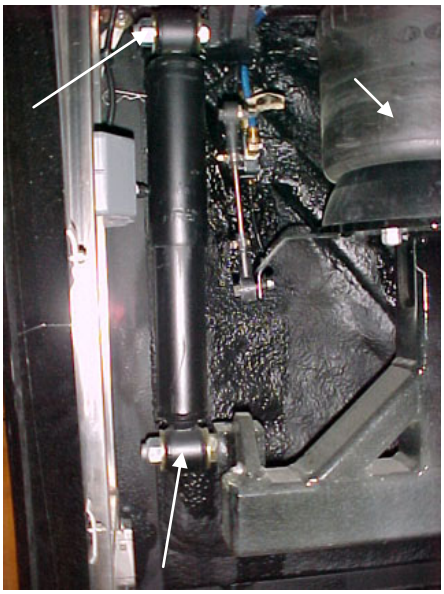
5.0 Close off wheelhousing using masking paper.	Prevent rust inhibitor from coming in contact with paint. To close off wheelhousing, a polythene sheet may be used.
6.0 Apply TECTYL 185 GW black rust inhibitor onto wheelhousing mechanical parts.	A spray gun and pumping system are required to apply the rust inhibitor. If the application is done inside a paint room, select high speed ventilation. **Minimum required thickness is 10 mils wet or 5 mils dry**.
7.0 Remove all masking material 30 minutes after application.	

ANNEX 1

1. Check and confirm that dew point and surface temperature are in accordance with to the following criteria:

   Surface temperature > 10°C

   Surface temperature > or = to dew point + 3°C

NOTE
Use the following table to determine dew point.

2. Check and confirm that TECTYL temperature is between 10°C and 35°C.

DEW POINT

	Relative Humidity (%)										
	10	20	30	40	50	60	70	80	90	100	
Temp (c)											
0	---	-16	-11	-8	-5	-3	-1	0	1	3	
1	---	-15	-10	-7	-5	-3	-1	1	2	4	
2	---	-14	-10	-6	-4	-1	0	2	3	5	
3	---	-13	-9	-5	-3	-1	1	2	4	6	
4	---	-13	-8	-5	-2	0	2	4	5	7	
5	---	-11	-7	-4	-1	1	3	5	6	8	
6	---	-11	-8	-3	0	2	4	6	7	9	
7	-18	-10	-6	-2	0	2	5	6	8	10	
8	-17	-9	-5	-1	1	4	6	7	9	11	
9	-16	-9	-4	-1	2	4	6	9	10	12	
10	-16	-8	-3	0	3	5	7	10	11	13	
11	-15	-7	-3	1	4	6	9	10	12	14	
12	-14	-6	-1	2	5	7	10	11	13	15	
13	-14	-6	-1	2	6	8	10	12	14	16	
14	-13	-5	0	4	6	9	11	14	15	17	
15	-12	-4	1	4	7	10	12	14	16	18	
16	-11	-4	1	5	9	11	13	15	17	19	
17	-10	-3	2	6	9	12	14	16	18	20	
18	-10	-2	3	7	10	13	15	17	19	21	
19	-9	-1	4	8	11	14	16	18	20	22	
20	-9	0		5	9	12	15	17	19	21	23
21	-8	0		5	10	13	16	18	20	22	24
22	-7	1		6	11	14	16	19	21	23	25
23	-6	2		7	11	15	17	20	22	24	26
24	-6	2		8	12	16	19	21	23	25	27
25	-5	3		9	13	16	20	22	24	26	28
26	-4	4		10	14	17	20	23	25	27	29
27	-4	5		11	15	19	21	24	26	28	30
28	-3	6		11	16	19	22	25	27	29	31
29	-2	6		12	17	20	23	26	28	30	32
30	-1	7		13	17	21	24	27	29	31	33
31	-1	8		14	19	22	25	27	30	32	34
32	0	9		15	20	23	26	29	31	33	35

4. FIBERGLASS REPAIR

All repairs to fiberglass parts consist of filling the damaged area with fiberglass cloth and resin or strand fiberglass and resin. The repair is allowed to harden, and then finishing operations may be performed. Use of the various materials is determined by the type of repair to be made. Large holes, torn sections and separate joints require the adhesive qualities of the resin and the reinforcing qualities of the fiberglass. Small dents, scratches or pits can be repaired using resin and strand fiberglass and filler mixed into paste. Instructions for either mix are explained under their respective headings in this section. For best results when making repairs, temperature should be between 70 and 75 ^{o}F (21-24 ^{o}C). Some people experience a skin reaction to resins. In such cases, wipe resin off with denatured alcohol or a good thinner. Use of protective hand cream is recommended.

⚠ WARNING ⚠

Always wear a respirator and goggles when grinding or sanding.

Extreme care must be taken if the sander is electrically operated, as dust from some resins is combustible when subjected to sparks or open flames. The proper tool for sanding resin is a low speed, air driven disc sander with a water attachment or a dry sander having a vacuum bag. Either will eliminate flying glass and resin dust.

The following additional tools and materials will assist in making repairs: hacksaw blade, assorted files, emery paper or cloth (150 or finer), scissors or tin snips, wax paper or cellophane sheets, a 3" (75 mm) paint roller, paint brush, putty knife, acetone and one or more heat lamps.

4.1 REPAIR USING FIBERGLASS CLOTH

Where necessary, sand paint away around damaged area and scrape away undercoating, if any, and wipe clean with solvent. Grind or file the damaged area to form a "V" at the broken or cracked portion. Sides of "V" should have a shallow pitch for maximum bonding area.

NOTE

Roughening the surface improves adhesion of resin.

If part is warped from original shape, use clamping equipment to straighten the surface. Preheat area to be repaired with one or two heat lamps placed 18 to 24 inches (450-610 mm) from repair.

⚠ CAUTION ⚠

Temperature should not exceed 140 ^{o}F (60 ^{o}C) during 30 minutes in order to avoid distortion.

Cut fiberglass cloth with scissors or tin snips, 1 to 3 inches (25-75 mm) larger than area to be repaired. Build area to desired height.

Mix resin and hardener following instructions on their containers. Saturate layers of fiberglass with mixture and place laminates over damaged area. Smooth out wrinkles and make sure general contour of area is maintained. Bubbles and wrinkles can be eliminated with a roller.

⚠ CAUTION ⚠

The pot life of the mix is approximately 15 minutes. Any accidental contamination to the skin, clothing, tools, etc. must be removed within this period. Use acetone to remove uncured resin.

Heat resin material again by placing heat lamps 18 to 24 inches (450-610 mm) from repaired area. Allow 12 to 15 minutes for repair to cure. After repair is cured, grind, file or sand to contour. Files other than body files may be more suitable. Featheredge and finish sanding.

If small pits or irregularities appear after making repair, correct by using a liberal amount of chopped strand or filler mixed with resin to form a paste. Refer to heading *"Repair using Fiberglass Paste"* in this section.

4.2 REPAIR USING FIBERGLASS PASTE

Fiberglass paste is used for repairing small dents, scratches, and pits. Paste is made by mixing resin, hardener and fiberglass strand or filler to the consistency of putty. Where it may be necessary, sand paint away around damaged area. On underside of coach, scrape away undercoating from damaged area, and wipe clean with solvent.

Preheat the area to be repaired using heat lamps. Mix desired quantities of resin and hardener according to manufacturer's instruc-

tions. Add powdered fiberglass strand into mixture to thicken it into a putty state.

NOTE
If repair is made on a vertical surface, adding powdered filler material to mixture will reduce tendency of hot resin to flow or run.

Apply the material with a putty knife or similar object, building material up to the desired contour. For deep filling and on vertical surfaces, several layers of material may be used.

A hacksaw blade, held flat to adjacent contour and then moved in a sawing action across the repair when the resin is in a gel state, will remove excess resin from repair. Finish repair with the same procedure as when using fiberglass cloth.

4.3 TYPICAL FIBERGLASS REPAIR PROCEDURE

Remove all loose particles or damaged material using a power sander or rasp. Clean area, overlapping hole approximately 1" to 1-½" (25-40 mm) all around. Remove all dirt, grease and paint from area to ensure good bonding surface. Feather the cleaned area all around (Fig. 5).

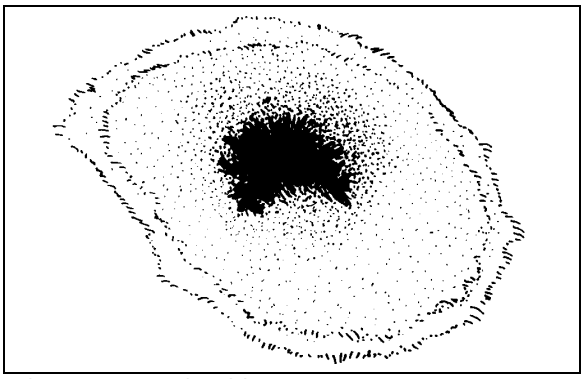

FIGURE 5: FIBERGLASS REPAIR 18089

Cut a piece of fiberglass mat slightly larger than area being repaired. Impregnate mat with general purpose polyester resin catalyzed normally. Use a clean paint brush to apply the polyester resin. Apply impregnated mat over hole and press onto surface with brush to obtain good adherence. Another coat of general purpose polyester resin can be applied at this time (Fig. 6).

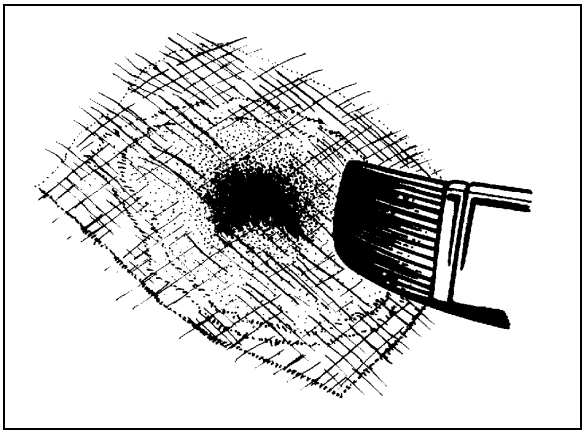

FIGURE 6: FIBERGLASS REPAIR 18090

NOTE
Remove all air between surfaces being joined. Allow area to harden and sand surface to remove any wax.

Apply another mat, followed by a cloth patch, and another mat. All layers must be thoroughly impregnated with polyester resin, brushed well and free of air. Apply more layers of mat and cloth as required until the desired strength and thickness is obtained, minimum two 1-½ oz (43 g) mats and one 9 oz (255 g) cloth (Fig. 7).

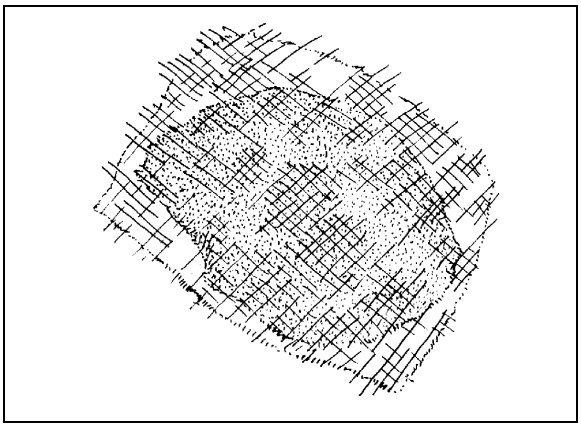

FIGURE 7: FIBERGLASS REPAIR 18091

Allow area to harden and contour the area with coarse sandpaper #100 (Fig. 8).

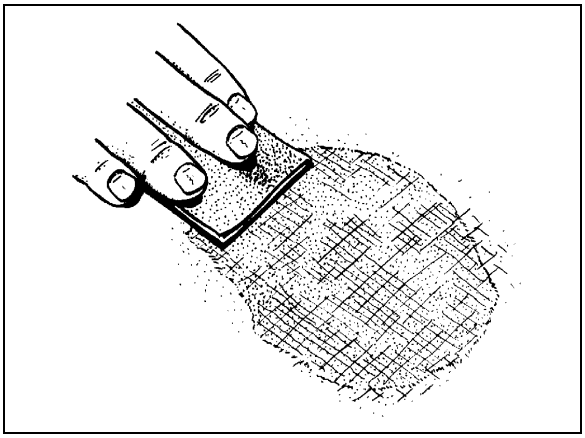

FIGURE 8: FIBERGLASS REPAIR 18092

Cover the area with a layer of resin putty and allow drying for approximately 15 to 20 minutes (Fig. 9).

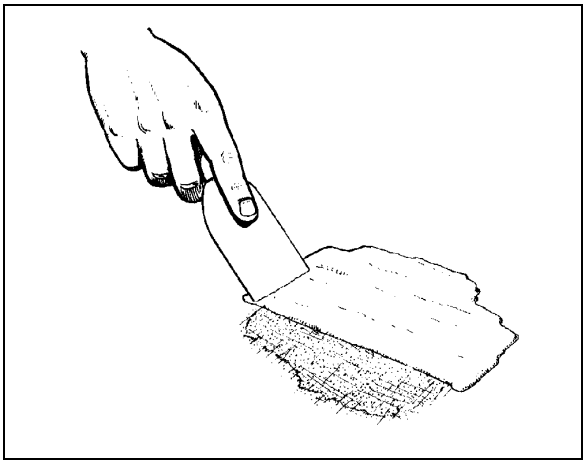

FIGURE 9: FIBERGLASS REPAIR 18093

Smooth off surface with coarse sandpaper #100 to desired shape. Further smooth surface with fine sandpaper #120 until repaired surface matches surrounding area paneling. Prime and paint the area to match surrounding paintwork.

5. PAINTING

5.1 NEW PAINT CARE

Our paint supplier recommends that you follow these simple precautions the first months of your new vehicle's life.

⚠ CAUTION ⚠
Apply these recommendations after repainting vehicle.

During the first 30 days:

- Do not use a commercial bus wash. Stiff brushes or sponges could mar the finish and damage the surface. Wash the vehicle by hand only and with cool water and a very mild bus wash solution. Be careful to use only a soft cloth or sponge;
- Wash vehicle in the shade, never in direct sunlight;
- Do not "dry wipe" vehicle –always use clean water. Dry wiping could scratch the finish;
- Avoid extreme heat and cold. Park vehicle in the shade whenever possible;
- Do not park under trees which drop sap or near factories with heavy smoke fallout. Tree sap and industrial fallout may mar or spot a freshly painted surface;
- Trees are also likely to attract birds. Bird droppings are highly acidic and will damage a freshly painted surface. Bird droppings, tree sap and industrial fallout should be washed off as soon as possible;
- Do not spill oil, gasoline, antifreeze, transmission fluid or windshield solvent on new finish. IMMEDIATELY rinse off any such spill with clean water, DO NOT WIPE;
- Do not drive on gravel roads. Paint finish easily chips during the first 30 days;
- Do not scrape ice or snow from the surface. A snow scraper can act like a paint scraper if the finish is new. Brush off loose material with a soft snow brush.

During the first 90 days:

- Do not wax or polish the vehicle. This will allow the finish to dry and harden completely.

5.2 PAINT TOUCHUP

When paint touchup or partial repainting is necessary, refer to the vehicle's paint scheme for color codes and paint brand.

Prévost recommends using the original paint brand to ease color matching.

In the event you sand through to the gelcoat surface you should prime the area with Standox "Non Stop Fill Primer (ST-11000)".

If you sand through to metal surface, first prime with Standox “Etch Primer (ST-11858)” then with Standox “Non Stop Fill Primer (ST-11000)”.

⚠ CAUTION ⚠

Be sure to heed all paint manufacturer’s recommendations, especially concerning paint dilution and application.

5.3 PAINTING

The standard paint used on the exterior of the vehicle is Standox Basislack. It is a high gloss polyurethane enamel finish designed for exposure to extreme conditions. Other types of paint may be called for as options by owner but are not dealt with in this section.

5.3.1 Safety

Care should be exercised in storing, handling, mixing, and applying paint and chemicals listed in this manual. The topcoat, primer, solvent, catalysts, accelerators, and cleaners are highly volatile and/or toxic if not properly used. Observe all safety instructions marked on the different packaging, as well as the following:

1. Do not smoke in the paint room or in adjacent area exposed to residue fumes.
2. Wear respirators approved by the governing safety and health regulations.
3. Maintain adequate ventilation at all times.
4. Dispose of any leftover paint mix properly.
5. Wear rubber gloves, rubber apron, and face shield during all phases of paint and chemical handling

5.3.2 Surface Preparation And Paint Application

	Aluminum and / or Stainless Steel	Fiberglass	Comments
Surface Preparation	Sand using P-150 grit sandpaper. It is recommended to sandblast rivets and panel edges with OLIMAG 35-70 blast media.	Sand using P-180 or P-240 sandpaper.	Do not use paint remover over aluminum or fiberglass.
Cleaning	STANDOX silicone remover ST-11654 (68-2989)		
Priming	STANDOX Reactive Etch Primer ST-13908 * Wait 30 minutes then apply STANDOX Non-Stop Füllprimer ST-11000 (68-2973)	STANDOX Non-Stop Füllprimer ST-11000 (68-2973)	Refer to product Technical Data sheet for proper mixing
Basecoat	Refer to paint scheme or coach record for proper color code and paint brand. We recommend using the same paint brand to ease color matching.		Refer to product Technical Data sheet for proper mixing
Clearcoat	STANDOX 2K MS Rapid Clear ST-11760 (68-2979) Allow 16 hours for drying		Refer to product Technical Data sheet for proper mixing

If assistance or technical information on STANDOX products is needed, please dial: 1 (800) 551-9296

6. BODY REPAIR

NOTE
The purpose of this procedure is to explain the steps to be followed in order to get a good adherence. These steps are of the uppermost importance to obtain 100 % adherence. For a complete description of the procedure, refer to the applicable video.

6.1 FRONT FACE

6.1.1 Front Face Body Panel And Molding

For removal of front face body panel and molding, you will need:

Drill with drill bits,
Lever or similar tool,
Olfa knife,
“C”-clamp,
Razor sharp window scraper.

Front Face Molding Removal

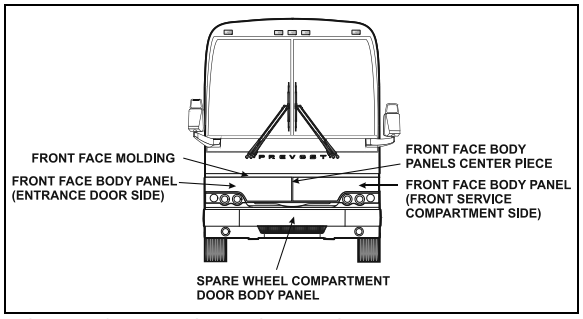

FIGURE 10: VIEW OF FRONT FACE

- First of all, pry loose the front face molding using the lever. Save molding if only the body panel needs to be changed.
- Using the Olfa knife, cut the Sika bead and the double-face self adhesive tape. Remove the Sika bead and self adhesive tape residue with the scraper.

Front Face Body Panel Removal

- Using a drill and a 1/8” drill bit remove the rivets fixing the vertical molding. The stainless steel molding is located on the entrance door or service door frame side depending on body panel to be removed.
- Using the Olfa knife, cut the Sika bead and the double-face self adhesive tape. Remove the Sika bead and self adhesive tape residue with the scraper.
- Pry loose the front face body panel using the lever.
- While somebody cuts the Sika bead and double-face self adhesive tape, another person pulls the body panel using the “C”-clamp to exert tension.
- Using the window scraper, remove any Sika bead or self adhesive tape residue left on fiber glass surface.

1.00		👁 Check condition of panels.	
1.05	**Panel Positioning**		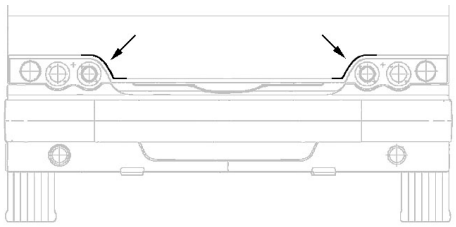
	A)	Position the panel so that its outline follows the contour of the headlamp.	
	B)	Draw a line on the side of the panel for reference. Extend the line above the panel.	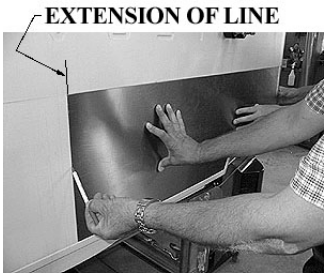
1.10 *	**S/S Panel Preparation**		**Top** 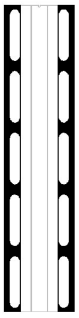 **Bottom** 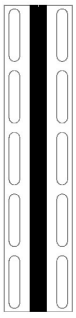 
	A)	Clean using anti-silicone. *(See PR000001, Section A)*	
	B)	Sand using Scotchbrite. *(See PR000001, Section G)*	
	C)	Clean using anti-silicone. *(See PR000001, Section A)*	
	D)	Apply Sika 205. *(See PR000001, Section B)*	
1.15	**Fiberglass Preparation**		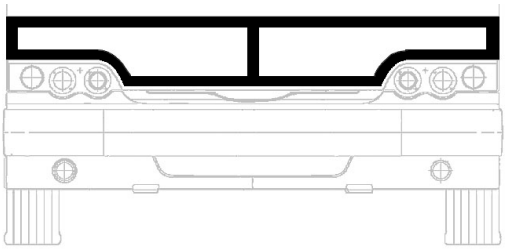
	A)	Sand using Scotchbrite. *(See PR000001, Section G)*	
	B)	Clean using tack cloth.	
	C)	Clean using anti-silicone. *(See PR000001, Section A)*	

	D)	Apply Sika 205. *(See PR000001, Section B)*	
1.20	**Center Piece Installation**		A) 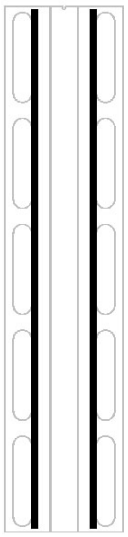 B) 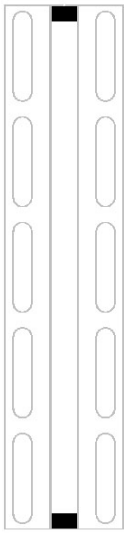 C) 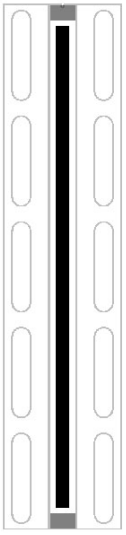
	A)	Apply double-face tape **1/32 X ¼** on top of center piece.	
	B)	Apply double-face tape **1/8 X ¼** underneath center piece.	
	C)	Apply some Sika 252. *Triangular shape bead* 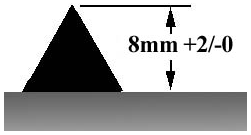	
	D)	Center and position center piece with reference to the lines performed at step 1.05 B. *Note: Position center piece before compressing* double-face tape*.*	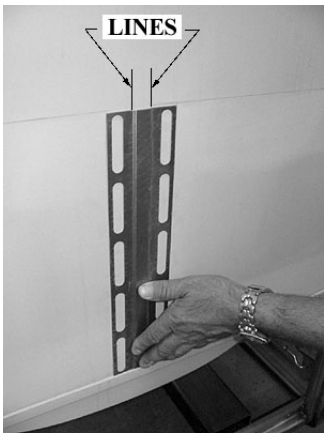

1.25	**L.H. & R.H. Panel Installation**		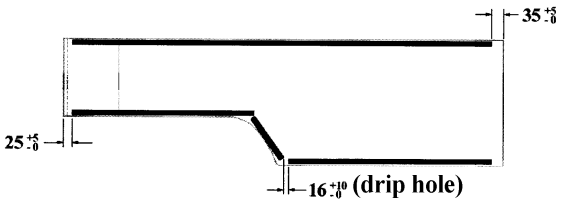
	A)	Apply double-face tape **1/16 X 1/4** about 1mm from panel edge.	

	B)	Apply Sika 252. *Triangular shape bead* 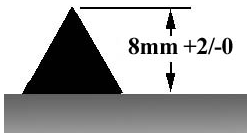	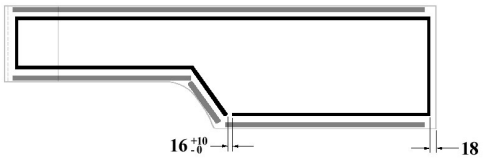
	C)	Position and glue side panels with reference to the lines draw at step 1.05 B). Compress side panel using a blackboard eraser. *Note: Position side panel before compressing double-face tape.*	
	D)	If applicable, remove excess of Sika using a spatula and clean surfaces using Sika 208.	
1.30	A)	Position entrance door or service door frame vertical molding.	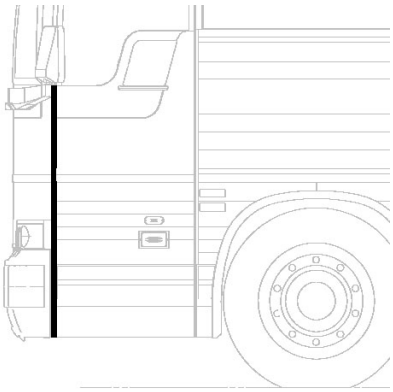
	B)	Drill using a **#30** drill bit & rivet.	

6.1.2 Spare Wheel Compartment Door Body Panel

For the removal of spare wheel compartment door body panel,

You will need:

A hammer,
Screwdriver,
Locking pliers,
Putty knife,
Heat gun,

- And isopropyl alcohol.
- Lower and remove front bumper.
- Remove spare wheel compartment door.
- First of all, using a lever or rigid screwdriver, pry loose body panel edge.
- Using a pair of locking pliers, gradually separate stainless steel body panel from door frame.
- Use the screwdriver to detach completely the stainless steel body panel from door frame.

Door Frame Preparation

- Start cleaning the door frame by removing double-face self adhesive tape.
- Use a heat gun and putty knife to remove the dried off Ciba 8535 epoxy glue residue.

⚠ WARNING ⚠

Make sure that heat gun nozzle does not get any closer than 4 inches from the surface.

⚠ WARNING ⚠

Because of its great toxicity, care should be taken not to use a buffer or other sanding method for glue removal.

- Then, using a scratch pad “Scotch Brite”, scratch the perimeter of door frame where the adhesive will be applied.
- Wear latex gloves and use a “Chix” cloth with isopropyl alcohol in order to remove any residue from scratching left onto the stainless steel surface.

NOTE

Apply evenly around the perimeter of the panel. Use two clothes, first one applies product while second one immediately dries surface off before product evaporation.

Body Panel Preparation

- Using a scratch pad “Scotch Brite”, scratch a 2 inch wide surface around the perimeter of the panel where the adhesive will be applied.
- Use a Chix cloth and anti-silicone to remove any dust or residue.
- Clean the perimeter of the panel using isopropyl alcohol. Use two clothes, first one applies product while second one immediately dries surface off before product evaporation.

Sikaflex 252 Adhesive Sealant Application

- Check Sikaflex 252 adhesive sealant for expiration date.
- Cut ¼ of V shape nozzle length for proper flow of glue. Perforate cartridge tip.
- Apply Sika bead along the perimeter of body panel ½” from double-face self adhesive tape.
- Peel the back from the self adhesive tape.

⚠ CAUTION ⚠

You only have 10 minutes to install the body panel before the adhesive starts to dry.

Stainless Steel Body Panel Installation

- Stainless steel body panel must be installed within 45 minutes.
- Align body panel with door frame and lightly press perimeter of body panel.
- Allow to dry for 6 hours before handling.

NOTE

*If for any reason you must remove the body panel from the door frame and the 6 hours have elapsed, you must wait **7 days** so that glue has time to cure.*

6.1.3 Windshield

For the removal or installation of windshield, you will need:

A rope,
A plastic spatula to lift the rubber seal lip,
A metal rod or screwdriver to clean the seal groove,
A filler insertion tool,
Goggles and protective gloves.

- From inside of vehicle, remove center post and interior finishing panels surrounding the windshield. In this case, we are replacing the R.H. side windshield.
- From outside of vehicle, remove filler located inside rubber seal to ease damaged windshield removal.
- From inside of vehicle, push against the top L.H. side corner of windshield for the removal of a R.H. side windshield. If the L.H. side windshield had to be removed, you would have to push against the top R. H. side corner.

NOTE
We are referring to the L.H and R.H. side as viewed from the inside of the vehicle.

- At the same time, another person gradually lifts the rubber lip from the vehicle exterior using a plastic spatula from top to bottom.
- Remove the entire damaged windshield and broken glass if applicable.
- If applicable, using a screwdriver or metal rod, remove black butyl sealant residue from rubber seal then clean with Sika 205.

Windshield Installation

NOTE
Rubber seal may have to be replaced if it was used on several windshield replacements.

- Spray rubber seal with soapy water to ease windshield insertion.
- Insert rope into rubber extrusion leaving enough length at each corner to make a loop. Spray soapy water onto rope and rubber extrusion (Fig. 12).
- Slide windshield into rubber seal groove starting with the bottom curved side edge. Using a plastic spatula, move the rubber seal lip aside to gradually insert the windshield into the groove.

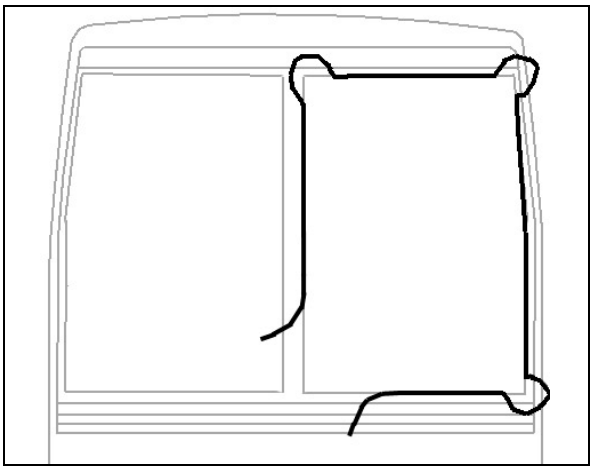

FIGURE 11: WINDSHIELD INSTALLATION USING ROPE

- Spray soapy water on a regular basis to ease this operation.
- Using the same type of plastic spatula, repeat the same operation from inside of vehicle, gradually inserting the windshield into the groove.

NOTE
Make sure windshield bottom edge is well inserted into the rubber seal groove before proceeding with the sides.

- Then, working from both sides of windshield bottom to top, gradually move the rubber seal lip aside to insert the windshield into the groove. Use also soapy water on the inside of vehicle to insert the windshield into the rubber seal groove.
- Insert the top curved corner then finish with the top of windshield.
- At the top of windshield, clean surface between fiberglass and rubber extrusion using Sika 205 (Fig. 13).
- Apply Sika 221 black between fiberglass and rubber extrusion
- Spray filler and rubber seal groove generously with soapy water.
- Using the special filler insertion tool, insert the filler into the rubber seal groove.
- Gradually insert filler into the rubber seal groove ensuring to leave a 2 inch excess length at the filler extremity.
- Every 6 inches or so, it is important to compress the filler due to its tendency to contract during drying process.

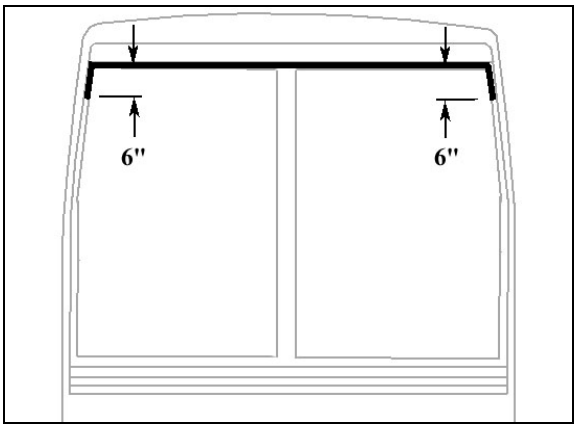

FIGURE 12: APPLICATION 0F SIKA 221 BLACK

- When filler insertion is almost complete, cut filler leaving ¼" of excess length to thwart filler contraction over time then insert filler into groove.
- Reinstall center post and interior finishing panels.
- Clean windshield surface of butyl residue.

6.2 ENTRANCE DOOR OR FRONT SERVICE DOOR BODY PANEL

For the removal of entrance door or front service door body panel, you will need:

Pneumatic "Zip gun" type tool;
Razor sharp window scraper;

- Before removing body panel, you can to ease repair uninstall entrance door or front service door from vehicle. If applicable, remove reflector, keyless system keyboard and cornering light.
- You must also remove horizontal finishing molding located underneath the window. This molding is glued and will have to be replaced because it will be damaged at removal.
- Remove interior finishing panel to access rub rail fixing bolts, then remove rub rail.
- Using the "**Zip Gun**", cut Sika bead located ¼ inch (7-8 mm) from each body panel edge and around cornering light.
- Separate body panel from door.
- Remove from door surface Sika bead and double-face self adhesive tape residue using a razor sharp window scraper.
- Use a Chix cloth and anti-silicone to remove any dust or residue.

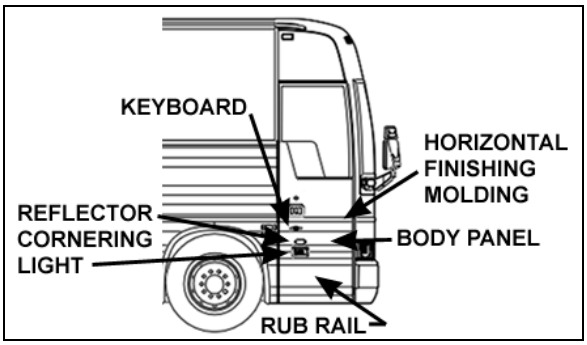

FIGURE 13: ENTRANCE DOOR BODY PANEL

Door Surface Preparation

- First of all, check Sika 205 cleaner expiration date.
- Before applying Sika cleaner, fold "Chix" cloth twice for proper width.
- Apply an even coat onto the door frame perimeter and allow to dry for 2 minutes (maximum 2 hours).
- Discard waste according to applicable environmental regulations, use dangerous waste containers.

Stainless Steel Body Panel Preparation

- Check that new body panel is the required one and is free of defects or scratches.
- Wear latex gloves and use a "Chix" cloth with isopropyl alcohol in order to remove any dirt or oily film left onto the stainless steel surface.

NOTE
Apply evenly around the perimeter of the panel. Use two clothes, first one applies product while second one immediately dries surface off before product evaporation.

- Using a scratch pad "Scotch Brite", scratch a 2 inch wide surface around the perimeter of the panel where the adhesive will be applied. The purpose being to create scratches onto the surface to increase adherence.
- Use again a chix cloth and anti-silicone to remove any dust or residue.
- Before applying Sika cleaner, fold "Chix" cloth twice for proper width.
- Apply an even coat onto the treated surface.

- Allow 2 minutes for drying in the case of stainless steel (maximum 2 hours).
- Apply a double-face self adhesive tape 1/8 by ½ inch on each side and at the top of body panel and around cornering light. Apply tape 1/8 inch from body panel edges and flush with cornering light perimeter.
- Peel back from double-face self adhesive tape.

Sikaflex 252 Adhesive Sealant Application

- Check Sikaflex 252 adhesive sealant for expiration date.
- Using a "V" shape nozzle, apply Sika bead ¼ inch (6-7 mm) from double-face self adhesive tape on all three sides of body panel and around cornering light.
- Once the body panel is compressed, the Sika bead will spread until it touches the tape.

NOTE
Sika adhesive bead height must be greater than double-face self adhesive tape.

NOTE
You only have 15 minutes to install body panel once the adhesive is applied.

- Peel the back from the self adhesive tape.
- Carefully center and align body panel edges with the door fiber glass surface.
- Ideally two persons should perform this installation.
- Lightly compress the body panel along the double-face self adhesive tape, then compress using a dry erasable marker board brush so as not to scratch or damage the stainless steel surface.
- Apply masking tape on both body panel sides.
- Using a caulking nozzle and "SIKAFLEX 221" adhesive, fill the cavity to seal both body panel sides and around cornering light.
- Wearing surgical gloves, smooth down the joint with your finger.
- Remove masking tape and protective plastic lamination.

6.2.1 Entrance Door Or Front Service Door Lower Body Panel

For the removal of entrance door or front service door lower body panel, you will need:

Pneumatic "Zip gun" type tool;
Razor sharp window scraper;

- Remove interior finishing panel to access rub rail fixing bolts, then remove rub rail.
- Remove two lower body panel fixing rivets.
- Using the "**Zip Gun**", cut Sika bead located on each lower body panel side.
- Remove lower body panel.
- Remove Sika bead residue using a razor sharp window scraper.
- Use a Chix cloth and anti-silicone to remove any dust or residue.

Door Surface Preparation

- First of all, check Sika 205 cleaner expiration date.
- Before applying Sika cleaner, fold "Chix" cloth twice for proper width.
- Apply an even coat onto the door frame perimeter and allow drying for 2 minutes.
- Discard waste according to applicable environmental regulations, use dangerous waste containers.

Stainless Steel Body Panel Preparation

- Check that new body panel is the required one and is free of defects or scratches.
- Wear latex gloves and use a "Chix" cloth with isopropyl alcohol in order to remove any dirt or oily film left onto the stainless steel surface.

NOTE
Apply evenly around the perimeter of the panel. Use two clothes, first one applies product while second one immediately dries surface off before product evaporation.

- Using a scratch pad "Scotch Brite", scratch a 2 inch wide surface on each side of the panel where the adhesive will be applied. The purpose being to create scratches onto the surface to increase adherence.

- Use again a Chix cloth and anti-silicone to remove any dust or residue.
- Before applying Sika cleaner, fold “Chix” cloth twice for proper width.
- Apply an even coat onto the treated surface.
- Allow 2 minutes for drying in the case of stainless steel.

Sikaflex 252 Adhesive Sealant Application

- Check Sikaflex 252 adhesive sealant for expiration date.
- Using a “V” shape nozzle, apply Sika bead 1 inch (25 mm) from both lower body panel side edges.

NOTE
You only have 15 minutes to install body panel once the adhesive is applied.

- Insert lower body panel bottom edge under the door and underneath the upper panel and carefully center and align lower body panel side edges with the door fiber glass surface.
- Ideally two persons should perform this installation.
- Lightly compress the body panel along the Sika bead, then compress using a dry erasable marker board brush so as not to scratch or damage the stainless steel surface.
- Fix lower body panel using two rivets.
- Apply masking tape on both lower body panel sides.
- Using a caulking nozzle and “SIKAFLEX 221” adhesive, fill the cavity to seal both body panel sides.
- Wearing surgical gloves, smooth down the joint with your finger.
- Remove masking tape and protective plastic lamination.

6.3 BAGGAGE COMPARTMENT OR REAR SERVICE COMPARTMENT DOOR BODY PANEL

For the removal and installation of baggage compartment or rear service compartment door stainless steel body panel, you will need :

A drill with drill bits;
Pneumatic “Zip gun” type tool;
Razor sharp window scraper or putty knife;

- Open damaged compartment door and unfasten rub rail fixing bolts. Remove rub rail.
- Unfasten bolts and disconnect cable if necessary in order to remove door from vehicle.
- Preferably install the door onto a work surface where it can be solidly fixed.

Door Lower Panel

Door lower panel is riveted only, not glued. If panel needs to be changed, remove fixing rivets using a drill and drill bits. Line up new panel and secure using 6 stainless steel rivets.

Body Panel Removal

- In the following procedure, only the door upper part needs to be changed.
- Using a drill with drill bits, remove the door upper part fixing rivets.
- 9 rivets are located in the door handle opening and 2 at the door upper edge.
- Using the “Zip Gun”, cut Sika bead located ½ inch from the door panel perimeter edge.
- Wearing gloves, goggles and ear plugs, pry loose body panel using a “Zip gun” or lever starting from the door lower part.
- Use a second person equipped with a pair of locking pliers to bend the body panel as you cut the Sika bead. Bend body panel enough to reach around the handle and continue to detach completely the stainless steel body panel from door frame
- Using the window scraper, remove any Sika bead or self adhesive tape residue left on the fiber glass.

Body Panel Preparation

- Using a scratch pad “Scotch Brite”, scratch a 2 inch wide surface on the panel two sides and bottom part where the adhesive will be applied. The purpose being to create scratches onto the surface to increase adherence.
- Use a Chix cloth and anti-silicone to remove any dust or residue.
- Before applying Sika 205 cleaner, fold “Chix” cloth twice for proper width.

- Apply an even coat onto the treated surface.
- Allow 5 minutes for drying in the case of stainless steel.

Door Frame Preparation

- Using the window scraper, remove any Sika bead residue left on the door frame surface.
- First of all, check Sika 205 cleaner expiration date.
- Before applying Sika cleaner, fold “Chix” cloth twice for proper width. Apply an even coat onto the treated surface.
- Discard waste according to applicable environmental regulations, use dangerous waste containers.
- Allow 2 minutes for drying in the case of stainless steel.

NOTE
In the case of baggage compartment door, apply wax paste around handle opening frame and at door frame upper part.

Gluing Jig Installation

- For best results, it is important that gluing jig installation for baggage and rear service door be performed properly according to part number and dimensions.
- **For more information, refer to gluing jig setup diagram (Fig. 14).**

Rear Service Door

- Lay down stainless steel body panel into the gluing jig as per setup diagram. Ensure it is lined up and set square with the reference marks.
- Heat Sikaflex 255 adhesive for at least 15 minutes, apply adhesive as per previously removed panel.
- Carefully lay down door metallic frame onto the stainless steel body panel inserting the upper part into the panel curved lip.
- Install compression bars to compress and hold body panel during curing process.
- Once cured, apply masking tape on both body panel sides.
- Using a caulking nozzle and “SIKAFLEX 221” adhesive, fill the cavity to seal both body panel sides.
- Wearing surgical gloves, smooth down the joint with your finger.
- Remove masking tape and protective plastic lamination.

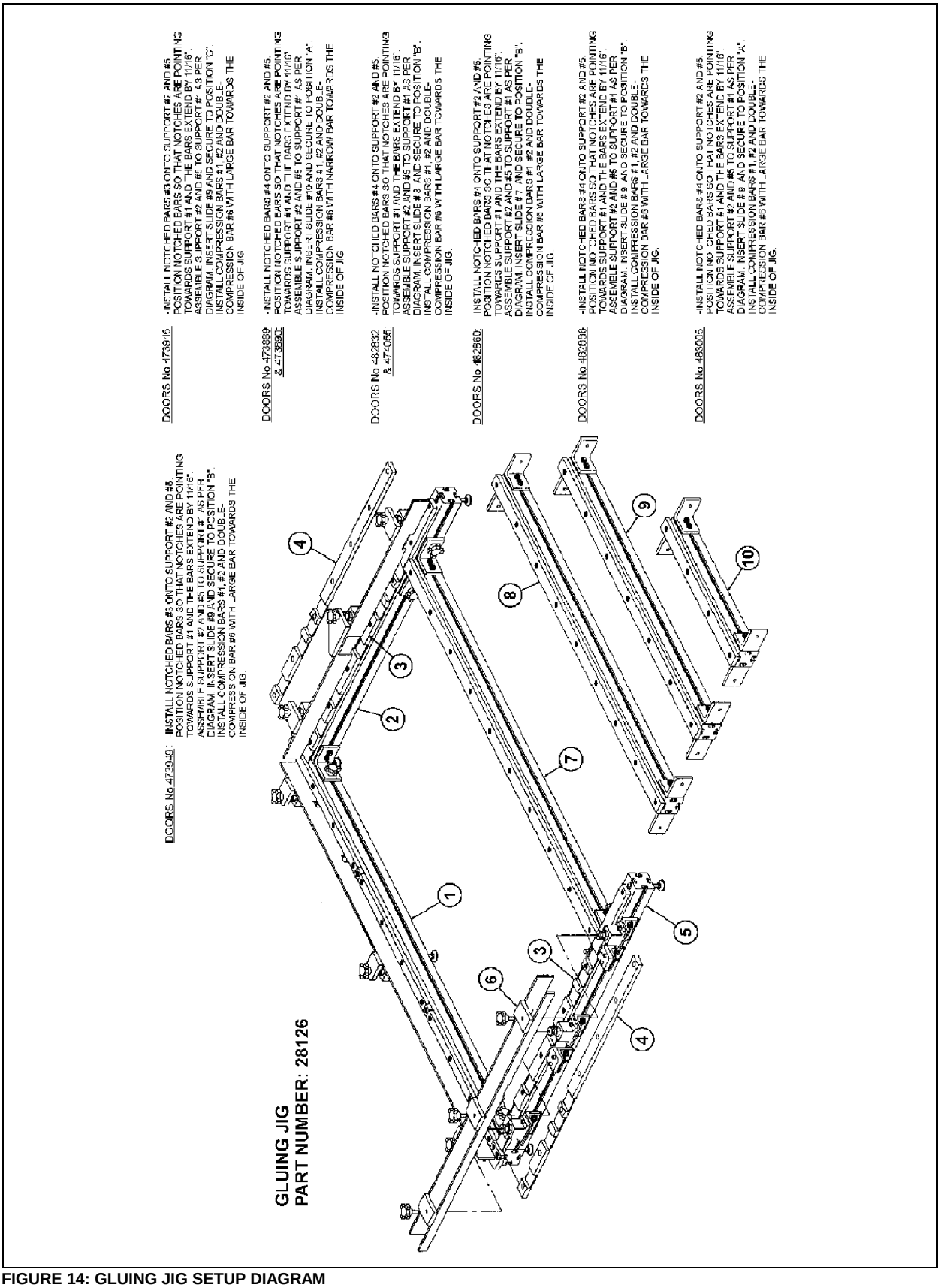

FIGURE 14: GLUING JIG SETUP DIAGRAM

Baggage Compartment Door

- Install gluing jig for a baggage compartment door. Refer to the included setup diagram according to part number and door dimensions.
- Lay down stainless steel body panel into the gluing jig as per setup diagram. Ensure it is lined up and set square with the reference marks.
- Heat Sikaflex 255 adhesive for at least 15 minutes, apply adhesive as per previously removed panel.
- Apply Sika 221 around handle opening frame.
- Carefully lay down door metallic frame onto the stainless steel body panel inserting the upper part into the panel curved lip.
- Carefully flip door frame and body panel over and install 9 rivets in the door handle opening and 2 at door upper part.
- Flip door frame and body panel over again and install compression bars to compress and hold body panel during curing process.
- Once cured, apply masking tape on both body panel sides.
- Using a caulking nozzle and "SIKAFLEX 221" adhesive, fill the cavity to seal both body panel sides.
- Wearing surgical gloves, smooth down the joint with your finger.
- Remove masking tape and protective plastic lamination.

6.4 MTH SIDE PANEL REPLACEMENT PROCEDURE

Material :

Anti-silicone (682989)	√	**Scotchbrite gray (680226)**	√	**Sika 206 G+P 1 liter (683446)**	√
	√	**Sika Aktivator (683661)**	√	**Sika 221 gray**	√
CHIX cloth (682384)	√			**Sika 252 black**	√
Blue cloth (682383)	√			**Sika 221 + Booster**	√

Equipment :

Glue Gun	√	

SECTION 1 SIDE PANEL GLUED WITH CIBA (Ciba on the horizontal tubing, Sika on the vertical tubing)

1.00	**Removal**		
	A)	Remove finishing molding. Insert a screwdriver into snap-on finishing molding joint. Bend finishing molding enough to be able to fix a pair of locking pliers. Using the pair of locking pliers, pull the stainless steel molding and at the same time gradually cut Sika bead with a sharp knife.	Be careful not to damage the adjacent surfaces.
	B)	Using a hammer and punch, drive out rivet shanks from top and bottom finishing molding supports. Use a #11 titanium drill bit to remove rivet heads.	
	C)	Use the pair of locking pliers to remove top and bottom finishing molding supports.	
	D)	Insert a flat screwdriver between the side panel and the vehicle chassis, in the top left and right corners. Make sure to separate side panel from backers at each end.	Be careful not to damage the adjacent surfaces.
	E)	Use the c-clamp to peel the side panel from the back structural panel and at the same time gradually cut Sika bead with a sharp knife.	

	F)	Use a heat gun and putty knife to remove the dried off Ciba epoxy glue residue.	- Make sure that heat gun nozzle tip is at least 4" from surface. - Because of its great toxicity, care should be taken not to use a buffer or other sanding method for glue removal.
	G)	Remove Sika bead using putty knife or pneumatic knife.	- Never heat Sikaflex glue in order to remove it - It is not necessary to remove 100% of SikaFlex.
	H)	Check panel horizontal supports for straightness using a straight edge. Take measurements with a ruler.	Tolerance: 1mm towards the outside and 1.5mm towards the inside.
1.05	**Side Panel Positioning**		
	A)	Install side panel onto the vehicle, align and center panel with adjacent panels and temporary fix using two 1/8 '' rivets at top (2 for side panels and 3 for engine air intake panels).	**Make sure that side panel is centered or that gap is between 3 and 4.5 mm with adjacent panels.**
	B)	Install conforming jig vertical supports onto the panel and drill holes into the temporary fixed vertical supports.	
	C)	Remove vertical supports and side panel.	

1.10	**Vehicle Surface Preparation**		
	A)	Clean horizontal supports using anti-silicone See PR000001 section A.	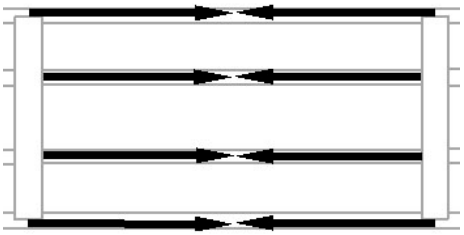
	B)	Clean vertical "backers" using anti-silicone even if some Sika 252 residue is present. See PR000001 section A.	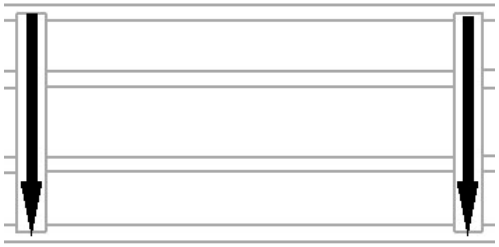
	C)	Use the belt sander to sand horizontal supports (grit coarse) **For an aluminum surface, you have 3 hrs maximum between sanding and the application of glue.**	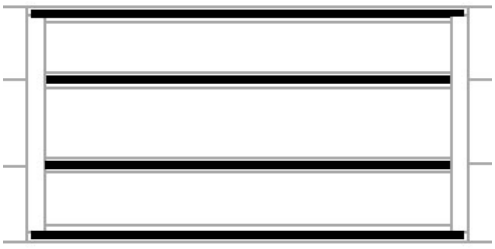

	D)	**NOT APPLICABLE IF VERTICAL BACKERS ARE GRIT BLAST** Use the orbital sander (Scotchbrite grit 7446B) or a 2" disc grinder (grit coarse) to sand vertical backers. **For an aluminum surface, you have 3 hrs maximum between sanding and the application of glue.**	**CAUTION: Sand a 1 7/8″ to 2 ¼″ width surface.** 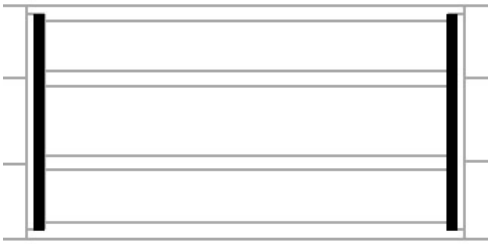
	E)	Clean all sanded surfaces using anti-silicone See PR000001 section A.	
	F)	Apply Sika Aktivator onto the vertical backers See PR000001 section C.	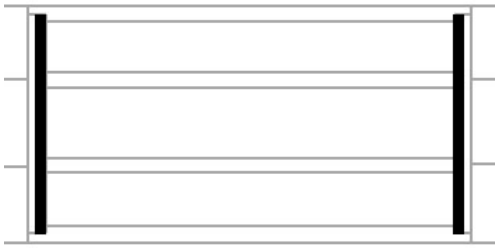
	G)	Install a neoprene foam tape at the center of panel horizontal supports and at each end if needed.	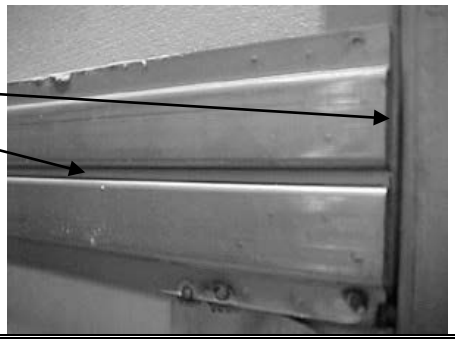

PR000001 Section A Alcohol or Anti-silicone

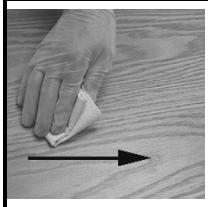

1. **Apply**

CHIX cloth

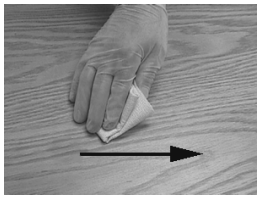

2. **Dry immediately**

Blue cloth

3. **Allow to dry**

Mandatory	**Minimum time : Wait for product to evaporate**
	After 2 hours: Start cleaning operation again
Before applying any other product	If surface seems dusty, greasy or with finger marks, start cleaning operation again.

PR000001 Section C Sika Aktivator

Glass

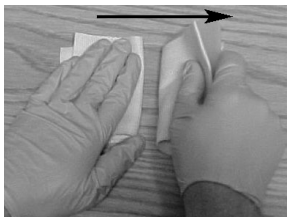

Plastic scraper

CHIX cloth

CHIX cloth

Other application

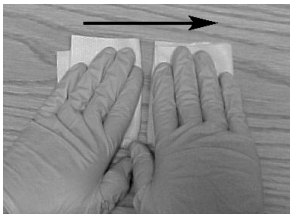

CHIX cloth

CHIX cloth

1. **Apply and dry immedi-ately**

2. **Allow to dry**

Mandatory	**Minimum time :5 minutes**
	After 2 hours: Remove dust using dry Chix cloth and start cleaning operation again
Optional: **Before applying any other product**	If surface seems dusty, remove dust using dry Chix cloth and start cleaning operation again.
	If surface seems greasy or with finger marks, start cleaning operation again.

PR000001 Section D Sika Primer 206 G+P

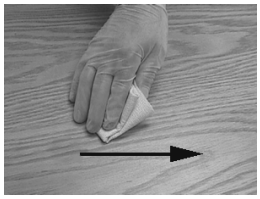

1. **Shake bottle to mix product**

2. **Apply a thin layer**

Chiffon CHIX

3. **Allow to dry**

Mandatory	**206 G+P**	**Minimum time: 10 minutes**
		After 2 hours: Remove dust using damp cloth (pure water)
		After 8 days : Reactivate with Aktivator as per section "C"
Optional: **Before applying any other product**		If surface seems dusty, remove dust using Chix damp cloth (pure water).
		If surface seems greasy or with finger marks, reactivate with Aktivator.

1.15 *	**Side Panel Preparation**		
	A)	Use a Chix cloth and anti-silicone to remove any dust or residue from the whole side panel surface	**For all Service Centers or if side panel is dusty**
	B)	Clean using anti-silicone See PR000001 section A.	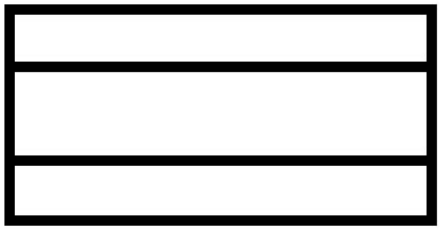
	C)	Sand using Scotchbrite	
	D)	Clean using anti-silicone See PR000001 section A.	
	E)	Apply Sika Aktivator onto a 2″ +/- ½″ width surface. See PR000001 section C.	
	F)	Install a 1/16″ x 1/4″ neoprene foam tape at each side panel end, 1 mm from panel edge. Make sure foam tape reaches bottom of creases.	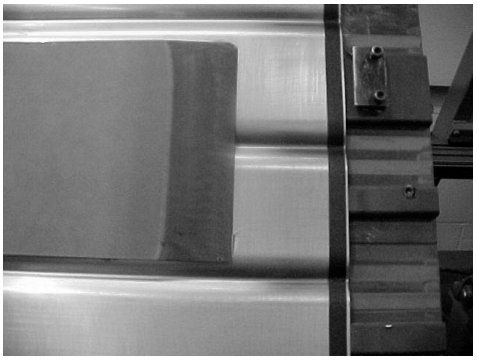
1.20	**Preparation of Ciba Epoxy Glue Cartridges**		You need about 7 cartridges for a large side panel. Use a constant and controlled source of heat. Maximum temperature is 120 °F.
	A)	Before applying glue, heat Ciba glue cartridges to reduce viscosity and speed up process. Make sure glue temperature is correct and you have sufficient cartridges.	
	B)	Perforate cartridge tip and install mixing nozzle. Cut mixing nozzle at 3rd notch.	
	C)	Insert cartridge into the gun.	
	D)	Before applying glue, heed this procedure: If a new mixing nozzle is used, install mixing nozzle onto the cartridge and insert into the gun. Take a sample of glue before applying. When changing cartridge without changing the mixing nozzle, take a sample of glue then install mixing nozzle onto the cartridge.	

1.25 *	Engine Air Intake Panel Installation		
	To know the time allotted between glue application and final installation; refer to annex 4		
	Always check color of glue before applying (charcoal gray). If the color turns black or white during application, remove this portion using a putty knife and clean with thinner		
	A)	If more than one hour has elapsed between the first cleaning and the application of glue or if in doubt, clean panel and vehicle surface again using anti-silicone See PR000001 section A.	
	B)	Seal each vertical “backer” end. Seal top and bottom part of vertical backer using Sika 221 gray or Ciba 8535.	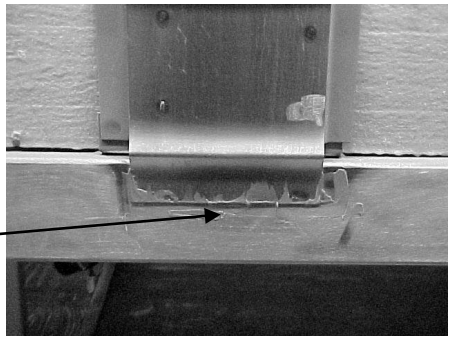
	C)	Apply bead (¼″ minimum dia.) Sika 252 onto structure.	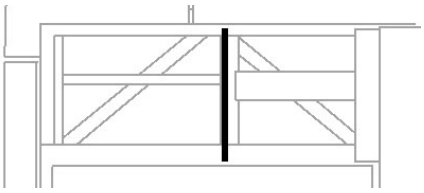
	D)	Apply bead (¼″ minimum dia.) Ciba onto structure.	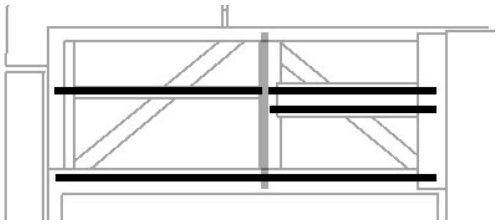
	E)	Apply Sika 252 onto air intake panel 1″ +¼″ / -0 from panel edge 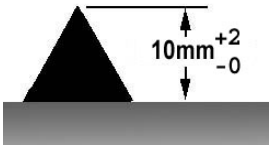	
	F)	Apply Ciba onto air intake panel **Make sure that Ciba and Sika beads adjoin.** (¼″ minimum dia.)	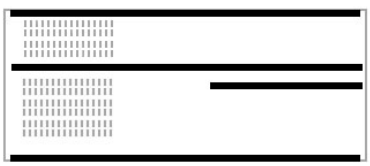
	G)	Install air intake panel using rivets and conforming jigs.	

1.30	**Side Panel Installation**	
	To know the time allotted between glue application and final installation; refer to annex 4	
	Always check color of glue before applying (charcoal gray). If the color turns black or white during application, remove this portion using a putty knife and clean with thinner	
	A) If more than one hour has elapsed between the first cleaning and the application of glue or if in doubt, clean panel and vehicle surface again using anti-silicone See PR000001 section A.	
	B) Seal each vertical “backer” end. Seal top and bottom part of vertical backer using Sika 221 gray or Ciba 8535.	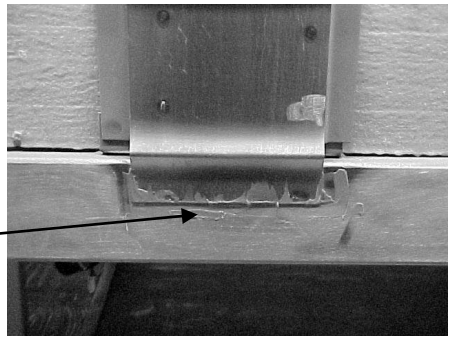
	C) **MTH W5 only.** Apply Sika 252 or 255 onto the awnings reinforcement plates Height of bead 3/8″ +1/8″ / -0.	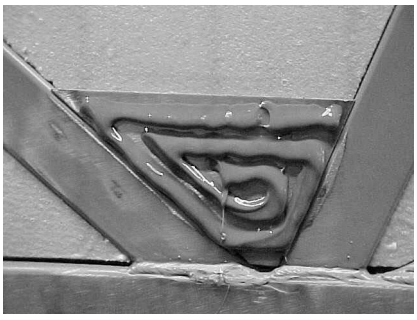
	D) Apply Ciba onto horizontal supports (¼″ minimum dia.)	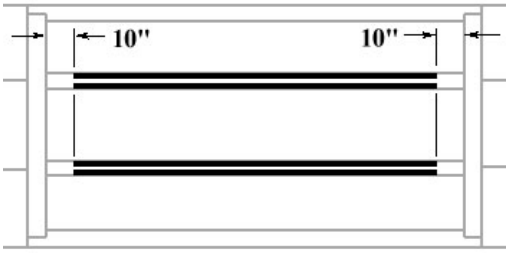
	E) Apply Sika 252 onto side panel 1″ +¼″ / -0 from panel edge 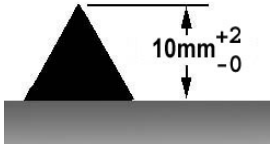	

	F)	Apply Ciba onto side panel **Make sure that Ciba and Sika beads adjoin.** (¼″ minimum dia.)	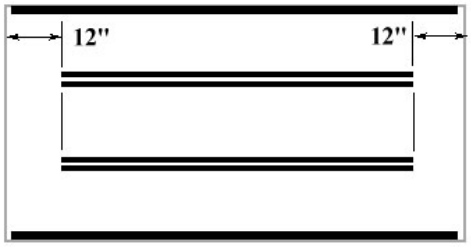
	G)	Carefully install panel onto the vehicle and hold it in place using the pre-drilled holes and rivets. Check positioning using backers.	Make sure that side panel is centered or that gap is between 3 and 4.5 mm with adjacent panels.
	H)	Fix conforming jig vertical supports onto the panel using the pre-drilled holes and screws. Apply pressure.	40 psi ±2 air pressure and check gap between panels.
	I)	Install horizontal pressure bars onto the vertical supports.	
	J)	Wait allotted curing period	See Annex 4
	K)	Remove conforming jigs and seal 1/8″ rivet heads using Sika 221.	
	L)	**Side Panel Upper Joint** 1) Clean surface using anti-silicone See PR000001 section A. 2) Apply Sika Aktivator See PR000001 section C. 3) Apply Sika 252 to seal structural tubing and side panel upper edge	
	M)	If necessary, clean excess of CIBA glue in the joints.	
	N)	If the first or last side panel was replaced, the vertical joint must be redone. Apply masking tape on each side of side panel joint. Use a caulking nozzle and grey Sikaflex 221 adhesive to fill the cavity between the panel and vehicle back plate. Clean using Sika 205. Allow 5 minutes minimum for drying. Wear surgical gloves and smooth down the joint with your finger.	

SECTION 2 SIDE PANEL GLUED WITH SIKA			
2.00	**Removal**		
	A)	Remove top and bottom finishing moldings. Insert a screwdriver into snap-on finishing molding joint. Bend finishing molding enough to be able to fix a pair of locking pliers. Using the pair of locking pliers, pull the stainless steel molding and at the same time gradually cut Sika bead with a sharp knife.	Be careful not to damage the adjacent surfaces You need to remove the finishing molding support and rivets in the case of engine air intake panel.
	B)	Insert a flat screwdriver between the side panel and the vehicle chassis, in the top left and right corners.	
	C)	Use the c-clamp to peel the side panel from the back structural panel as far as the middle and at the same time gradually cut Sika bead with a sharp knife. Do the same for the other corner.	Ideally, the hoist or chain block must be fastened to the floor while pulling from a 45° angle so as not to damage the vehicle structure
	D)	Remove as much glue as possible from the structure using a putty knife or pneumatic knife without damaging 206 G+P primer.	Never heat SikaFlex adhesive to remove.
	E)	Check panel horizontal supports for straightness using a straight edge. Take measurements with a ruler.	Tolerance: 1mm towards the outside and 1.5mm towards the inside.
2.05	**Side Panel Positioning**		
	A)	Install side panel onto the vehicle, align and center panel with adjacent panels and temporary fix using two 1/8 '' rivets at top (2 for side panels and 3 for engine air intake panels).	**Make sure that side panel is centered or that gap is between 3 and 4.5 mm with adjacent panels.**
	B)	Install conforming jig vertical supports onto the panel and drill holes into the temporary fixed vertical supports.	
	C)	Remove vertical supports and side panel.	
2.10	**Vehicle Surface Preparation**		
	A)	Clean horizontal supports using anti-silicone See PR000001 section A.	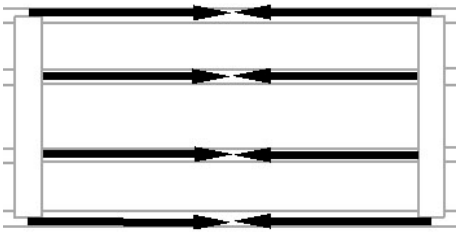
	B)	Clean vertical "backers" using anti-silicone. See PR000001 section A.	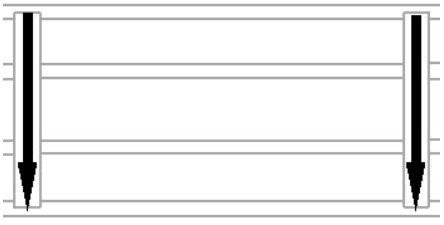
	C)	If necessary, touch up with primer See PR000001 section D.	
	D)	Reactivate all surfaces using Sika Aktivator See PR000001 section C.	

	E)	Install a neoprene foam tape at the center of panel horizontal supports and at each end if needed.	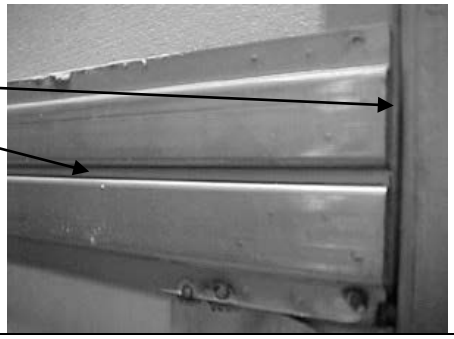
2.15 *	**Side Panel Preparation**		
	If you receive a side panel with 206G+P primer already applied, reactivate surface as per PR000001 section D. You don't have to perform step a) to e) hereafter. Refer to the date written onto the panel.		
	A)	Use a Chix cloth to remove any dust or residue from the whole side panel surface	**For all Service Centers or if side panel is dusty**
	B)	Clean using anti-silicone See PR000001 section A.	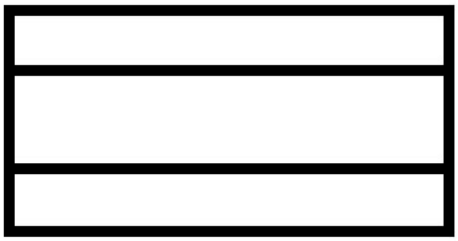
	C)	Sand using Scotchbrite	
	D)	Clean using anti-silicone See PR000001 section A.	
	E)	Apply Sika 206 G+P Primer See PR000001 section D.	
	F)	Install a 1/16″ x 1/4″ neoprene foam tape at each side panel end, 1 mm from panel edge. Make sure foam tape reaches bottom of creases.	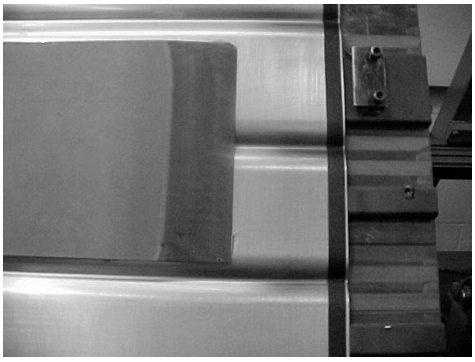
2.20	**Engine Air Intake Panel Installation**		
	A)	If more than one hour has elapsed between the first cleaning and the application of glue or if in doubt, see PR000001 section D.	
	B)	Seal each vertical "backer" end. Seal top and bottom part of vertical backer using Sika 221 gray	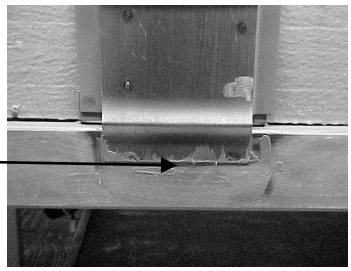

	C)	Apply a bead of Sika 221+booster onto structure (¼″ minimum dia.) **Time allotted between glue application and final installation: 30 minutes maximum**	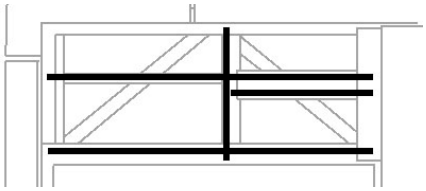
	D)	Apply a bead of Sika 221+booster onto air intake panel 1″ +¼″ / -0 from panel edge. **Time allotted between glue application and final installation: 30 minutes maximum** 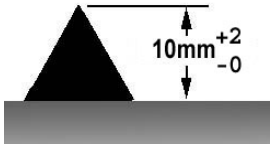	
	E)	Install air intake panel using rivets and conforming jigs.	**Conforming Jig Installation Time: 4 hours** **Time before moving vehicle: 8 hours**
2.25	**Side Panel Installation**		
	A)	If more than one hour has elapsed between the first cleaning and the application of glue or if in doubt, see PR000001 section D.	
	B)	Seal each vertical “backer” end. Seal top and bottom part of vertical backer using Sika 221 gray	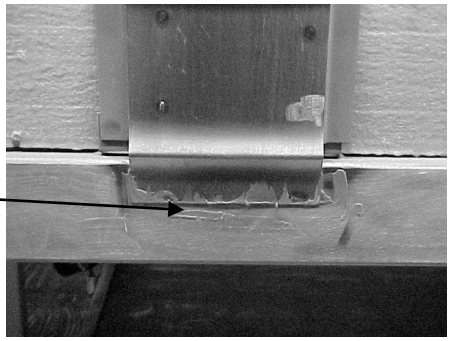
	C)	**MTH W5 only.** Apply Sika 252 or 255 onto the awnings reinforcement plates Height of bead 3/8″ +1/8″ / -0.	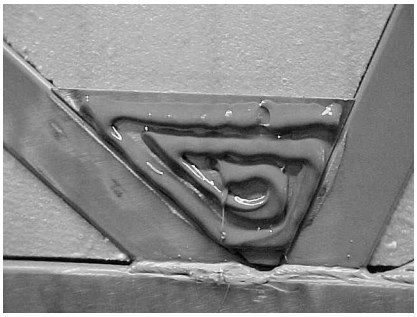

D)	Apply Sika 221+booster onto horizontal supports **Time allotted between glue application and final installation: 30 minutes maximum** 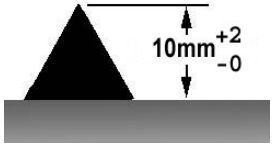	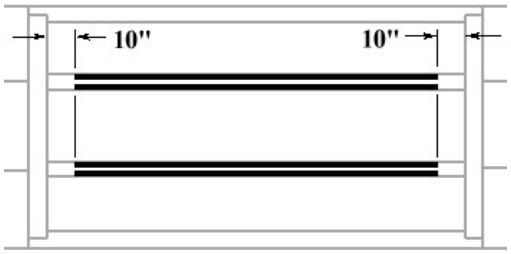
E)	Apply Sika 221+booster onto side panel 1″ +¼″ / -0 from panel edge **Time allotted between glue application and final installation: 30 minutes maximum** 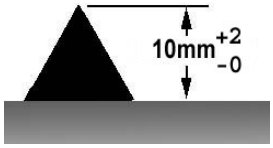	
F)	Carefully install panel onto the vehicle and hold it in place using the pre-drilled holes and rivets. Check positioning using backers.	Make sure that side panel is centered or that gap is between 3 and 4.5 mm with adjacent panels.
G)	Fix conforming jig vertical supports onto the panel using the pre-drilled holes and screws. Apply pressure.	40 psi ±2 air pressure and check gap between panels.
H)	Install horizontal pressure bars onto the vertical supports..	
I)	Wait allotted curing period	**Conforming Jig Installation Time: 4 hours** **Time before moving vehicle: 8 hours**
J)	Remove conforming jigs and seal 1/8″ rivet heads using Sika 221.	
K)	**Side Panel Upper Joint** 1) Clean surface using anti-silicone See PR000001 section A. 2) Apply Sika Aktivator See PR000001 section C. 3) Apply Sika 252 to seal structural tubing and side panel upper edge	
L)	If necessary, clean excess of Sika glue in the joints.	

	M)	If the first or last side panel was replaced, the vertical joint must be redone. Apply masking tape on each side of side panel joint. Use a caulking nozzle and grey Sikaflex 221 adhesive to fill the cavity between the panel and vehicle back plate. Clean using Sika 205. Allow 5 minutes minimum for drying. Wear surgical gloves and smooth down the joint with your finger.	

SIDE PANEL REPAIR OR REPLACEMENT

MTH – XL2

NOTE
All defects and solutions proposed hereafter can be used with any side panel.

DEFECT	***SOLUTION***	***NOTE***
1. Improper positioning of vertical bead (especially engine air intake panel).	Replace side panel	Refer to procedure
2. Impossible to seal side panel.	Replace side panel	Refer to procedure
3. Ungluing of vertical or horizontal bead.	Replace side panel	Refer to procedure
4. Improper conforming of side panel at horizontal supports level.	From inside of vehicle, reapply adhesive between horizontal supports and side panel, see annex # 1	Check horizontal supports for straightness using a straight edge by measuring side panel.
5. Small water infiltration through a vertical joint without ungluing.	Seal from inside of vehicle, see annex #2	Use Sikaflex 221
6. Major water infiltration through engine air intake panel without ungluing.	Depending on the case, replace or repair side panel, see annex # 3	

ANNEX # 1 (Side panel glued with Ciba only)

For this operation, you must remove interior insulation, insert a small tube connected to Ciba cartridge mixing nozzle and inject the glue between horizontal supports and side panel. Ensure to fill in under horizontal supports so as to trap the adhesive between support and side panel.

ANNEX # 2

When performing water test, a small water infiltration through vertical joint is possible. Ensure that no ungluing is occurring at joint level then seal vertical joint from inside of vehicle. Ensure to completely dry the area before sealing. Seal using Sikaflex 221 gray.

ANNEX # 3

If there is water infiltration through engine air intake panel and first rear side panel joint, it is likely that water infiltrates through air intake panel itself or through joint between two panels. Before repairing, ensure that vertical joint lower portion is filled with Sikaflex 221 adhesive up to Ciba adhesive and ensure that engine air intake panel adhesion is proper. If there is still evidence of water infiltration, you must replace engine air intake panel. If water infiltration is through vertical joint, you must replace first rear side panel.

ANNEX 4 TABLE OF ALLOTTED CURING PERIODS (CIBA adhesive)
(NO-HEAT CONFORMING JIGS)

Room Temperature	Conforming Jig Installation Time	Complete stop of vehicle (without moving)	Time before moving vehicle $\pm 10^{O}$F with room temperature	Polishing after the application of adhesive or before vehicle back in operation	Time allotted between glue application and final installation
87°F	4 HRS	8HRS	8HRS	16HRS	25m
77°F	6HRS	12HRS	12HRS	24HRS	45m
72°F	7HRS	14HRS	14HRS	28HRS	50m
67°F	8HRS	16HRS	16HRS	32HRS	1HR
<67°F	*NO APPLICATION OF ADHESIVE IS ALLOWED*				

6.5 LATERAL FIXED WINDOW

Depending on the method chosen for fixed side window removal or installation, you may need:

* Drill equipped with a sharp pointed rod into which a small hole was drilled;
* Razor sharp window scraper;
* Braided windshield wire and a pair of handles;
* Gloves, goggles or face shield.

Fixed Window Removal

1st Method

NOTE
This method is used only in the case of a regular fixed side window. For the fixed upper portion of awning or sliding windows, you must use method number 2.

- Apply a sticky plastic film onto all of window outside surface for safety reason.
- Using a drill equipped with the special sharp pointed rod, drill through the window seal into one of the bottom corners, from a 30º angle with reference to the vehicle.
- This procedure requires accuracy and it is possible not to succeed on the first attempt. From the inside of vehicle, a second person ensures the rod passes through.
- Remove the rod, thread the wire into the small hole. Reinsert the rod and the wire into the hole far enough so that the person inside the vehicle can pull the rod using a pair of pliers.
- Attach the wire ends to the specially designed handles.
- Pull in turn from the inside and the outside of vehicle to gradually cut the Sika bead on the window perimeter.
- When you reach top corner, detach wire from the outside handle, secure it to a fish wire or rod and thread it underneath the aluminum molding behind the rivets.
- Detach wire from fish wire and continue cutting using the handle.
- Cut Sika bead until you come back to starting point, then you can remove the window by carefully pushing it out from the inside of vehicle.

2nd Method

- Apply a sticky plastic film onto all of window outside surface.
- To limit as much damage as possible, remove any interior molding in the way. Install a plastic film on the window interior surface and secure using masking tape onto all of window perimeter.

NOTE
Do not stretch plastic film and leave enough play to be able to push window out without tearing the plastic film.

- Using a ball peen hammer, hit one of the window bottom corners from the **outside**.
- Carefully push window out and lift it up sufficiently to separate it from the aluminum molding.
- Attach the windshield wire to a fish wire and thread it underneath the aluminum molding behind the rivets.
- Detach wire from fish wire and continue cutting using the handle.
- Make a notch at each window top corner to make sure you pass underneath the remaining pieces of glass.
- Remove the aluminum molding and clean up the frame using the window scraper.
- Before starting window frame treatment, make sure window frame is truly clean and free of pieces of glass.
- First of all, check Sika 205 cleaner expiration date.
- Before applying Sika cleaner, fold “Chix” cloth twice for proper width.
- Apply an even coat onto the window frame and allow to dry for 10 minutes.
- Discard waste according to applicable environmental regulations, use dangerous waste containers.
- Apply masking tape before applying Sika glue to protect paint and adjacent window during surface treatment.

Window Surface Treatment

- Use “Spray Away” or “ESSEX GC-800” window cleaner (Prévost #683926) around

window perimeter and edges to remove any oily film while inspecting for damages.

- Wipe clean using a dry cloth.
- Repeat previous step using a second dry cloth to ensure window is truly clean and allow to dry for 1 minute.
- Install two stops into the aluminum extrusion one inch from each window edge.

Preparation Of Window When Using Sikatack Ultrafast 2 Adhesive

- Check "SIKA 205" product expiration date.
- Before applying Sika cleaner, fold "Chix" cloth twice for proper width.
- Apply an even coat onto the window casement and allow to dry for 2 minutes.
- Apply Sika 206 G+P primer onto the window casement and allow to dry for 10 minutes.

Fixed Side Window Installation Using Sikatack Ultrafast 2

- Use "Sikatack Ultrafast 2" adhesive.
- Check product expiration date.
- Always heat adhesive first for 15 minutes in an oven.

NOTE
You only have 10 minutes to install window once the SIKA ULTRAFAST 2 product is applied.

- Using a triangular nozzle, apply a Sikatack Ultrafast 2 bead on all of window frame perimeter. Apply a second bead on frame top.
- Two persons may then install window by inserting the top part into the aluminum extrusion and then carefully rest the window casement against the frame aligning the bottom part.
- Install two stops into the aluminum extrusion one inch from each window edge.

Window Temporary Fixing Using Sikatack Ultrafast 2 Adhesive

1st Method

- From the outside, lean a straight edge against each window side to guide the person in charge of the suction jig installation. The window must be on the same level than the adjacent one(s).
- From the inside, remove finishing molding, install the cups onto the glass surface, 6 inches from bottom of window and screw down the jig ends onto the frame metallic structure to adjust depth.

NOTE
The person outside the vehicle must guide throughout this procedure.

- Finally, maximum watertightness is achieved when you notice the bead running over towards the inside.
- Allow drying for at least 6 hours.

2nd Method

- From the outside, use a ram or a jack equipped with a padded surface at one end and secured to the other end.
- This equipment must be easily adjustable and compress the window against the frame.
- Lean the padded surface 6 inches from the bottom of window, use a straight edge and adjust the equipment so that the window is level with the adjacent one(s).
- Finally, maximum watertightness is achieved when you notice the bead running over towards the inside.
- Allow drying for at least 6 hours.

6.6 DRIVER'S WINDOW AND UPPER LATERAL WINDOW

For the removal of driver's window or upper lateral window, you will need:

Pneumatic «Zip gun» type tool;
Razor sharp window scraper;
"Olfa" knife;
Face shield.

- In the case of driver's window only, open front service compartment door.
- Mark the position of the driver's window for future reference.
- From inside of vehicle, cut Sika bead around window perimeter using a "Zip gun" while another person hold the window from the outside.

NOTE

Wear ear plugs during this operation.

- Then, move outside of vehicle and cut Sika bead to free window while somebody else hold the window from the inside.
- Carefully remove window from frame, ask for help if needed.
- Using a razor sharp window scraper, remove from window frame Sika bead and double-face self adhesive tape residue.
- First of all, check Sika 205 cleaner expiration date.
- Before applying Sika cleaner, fold “Chix” cloth twice for proper width.
- Apply an even coat onto the inside of window frame and allow to dry for 2 minutes (maximum 2 hours).
- Discard waste according to applicable environmental regulations, use dangerous waste containers.
- Apply masking tape before applying Sika glue to protect paint and adjacent window during surface treatment.

Window surface treatment

- Use Spray Away or “ESSEX GC-800” window cleaner (Prévost #683926) around window perimeter and edges to remove any oily film while inspecting for damages.
- Wipe clean using a dry cloth.
- Repeat previous step using a second dry cloth to ensure window is truly clean and allow drying for 1 minute.
- Check “SIKA 205” product expiration date.
- Before applying Sika cleaner, fold “Chix” cloth twice for proper width.
- Apply an even coat onto the inside of window frame and allow drying for 2 minutes.

Driver’s Window Installation

- Use “Sikatack Ultrafast 2” adhesive.
- Check product expiration date.
- Always heat adhesive first for 15 minutes in an oven.

NOTE

You only have 10 minutes to install window once the SIKA ULTRAFAST 2 product is applied.

- Apply a double-face self adhesive tape 1/8 by ¼ inch inside window frame to prevent glue from reaching the inside of the vehicle and to mechanically hold the window until the adhesive is cured. Peel the back from the tape.
- To support the window, position two “Quick Grip” type pliers at the base of the frame.
- Using the caulking nozzle, seal the top edge with SIKA ULTRAFAST 2.
- Change for a triangular nozzle with a 15 mm opening, apply a Sika bead on all 4 window edges beside the double-face self adhesive tape.
- Center and align the window base using the two pliers while pressing firmly the window perimeter against the frame.
- If this has not been done already, apply masking tape near the window edge adjacent to front face before doing finishing joint. Using a caulking nozzle and Sika Utrafast 2 adhesive, complete a finishing joint and scrape the excess with a plastic scraper.

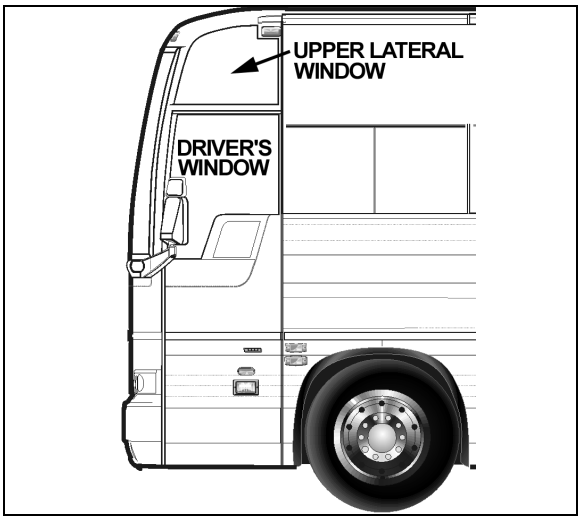

FIGURE 15: DRIVER'S OR UPPER LATERAL WINDOW

- Complete a second finishing joint at the window top making sure there are no cavities.
- Carefully remove masking tape.

- Wet “Ultrafast 2” adhesive every 15-20 minutes using water to accelerate the curing process.
- Do not move the vehicle for 2 hours.

Upper Lateral Window Installation

- Use “Sikatack Ultrafast 2” adhesive.
- Check product expiration date.
- Always heat adhesive first for 15 minutes in an oven.

NOTE
You only have 10 minutes to install window once the SIKA ULTRAFAST 2 product is applied.

- Apply a double-face self adhesive tape 1/8 by ¼ inch inside window frame to prevent glue from reaching the inside of the vehicle and to mechanically hold the window until the adhesive is cured. Peel the back from the tape.
- Remove the lens from the clearance light.
- Change for a triangular nozzle with a 15 mm opening, apply a Sika bead on all 4 window edges beside the double-face self adhesive tape.
- Center the window while pressing firmly the window perimeter against the frame.
- If this has not been done already, apply masking tape before doing finishing joint. Using a caulking nozzle and Sika Utrafast 2 adhesive, complete a finishing joint and scrape the excess with a plastic scraper.
- Carefully remove masking tape.
- Wet “Ultrafast 2” adhesive every 15-20 minutes using water to accelerate the curing process.
- Do not move the vehicle for 2 hours.

6.7 ENGINE COMPARTMENT DOOR BODY PANEL

For the removal of engine compartment door body panel, you will need :

A pneumatic “Zip gun” type tool,
Razor sharp window scraper to remove Sika adhesive residue,
A pair of locking pliers,
And isopropyl alcohol.

- Remove damaged engine compartment door from vehicle (refer to Maintenance Manual, in this section).
- Install the damaged door onto an appropriate support.
- Wearing gloves, goggles and ear plugs, pry loose body panel using a “Zip gun” or lever starting from the edge opposite the curved side.

⚠ CAUTION ⚠
Do not damage painted surface.

- Use the “Zip gun” to detach completely the stainless steel body panel from door frame.
- Use a second person equipped with a pair of locking pliers to pull the body panel as you cut the Sika bead.

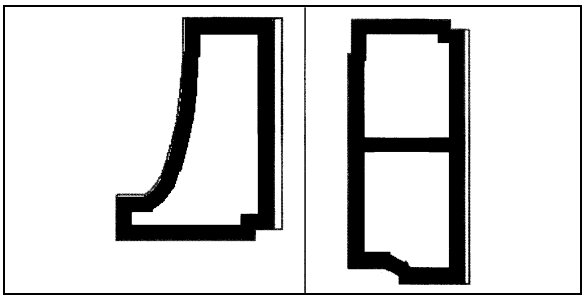

⚠ WARNING ⚠
Be very careful when pulling the body panel, somebody could get hurt if the body panel suddenly detach from the door surface without notice.

Door Frame Preparation

- Using the window scraper, remove any Sika bead or self adhesive tape residue left on the fiber glass surface.
- First of all, check Sika 205 cleaner expiration date.
- Before applying Sika cleaner, fold “Chix” cloth twice for proper width. Apply an even coat onto the treated surface.

NOTE
Make sure not to get any Sika cleaner onto the surrounding painted surfaces.

- Discard waste according to applicable environmental regulations, use dangerous waste containers.

- Allow 2 minutes for drying in the case of fiber glass (maximum 2 hours).

Body Panel Preparation

- Check that new body panel is the required one and is free of defects or scratches.
- Clean using anti-silicone in order to remove any dirt or oily film left onto the stainless steel surface.



NOTE

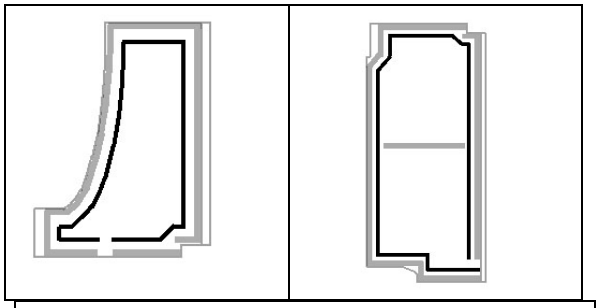

Apply evenly around the perimeter of the panel. Use two clothes, first one applies product while second one immediately dries surface off before product evaporation.

- Then, using a scratch pad “Scotch Brite”, scratch the perimeter of door where the adhesive will be applied.

NOTE

It is important to support underneath the curved surface so as not to change the angle of the body panel and therefore prevent deformation.

- Use a Chix cloth and anti-silicone to remove any dust or residue.
- Apply an even coat of Sika cleaner onto the treated surface and allow 2 minutes (max. 2 hours) for drying in the case of stainless steel.
- Apply a double-face self adhesive tape.

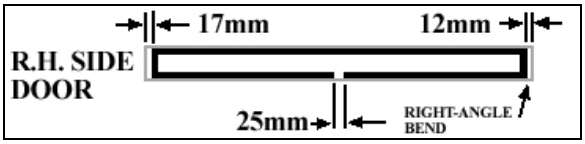

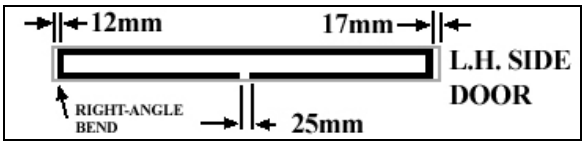

- Always leave a length of self adhesive tape on each side of the body panel, sufficient enough to be able to peel the back from the tape when installing the body panel.

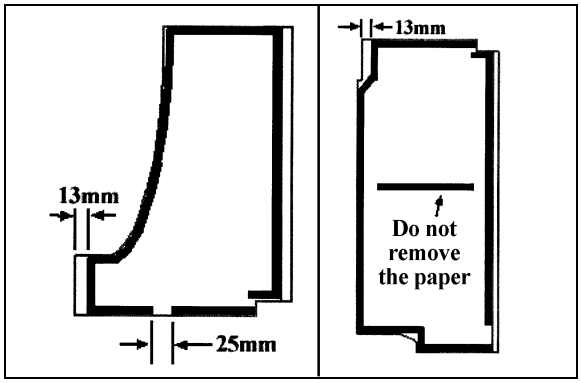

Sikaflex 252 Adhesive Application

- Use a “V” shape nozzle, cut the tip and apply Sika bead ¾ inch (15 mm) from double-face self adhesive tape.

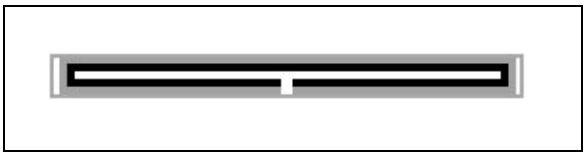

- Ideally two persons should perform this installation.
- Carefully center and align body panel while the second person keeps the self adhesive tape extremities outside the body panel.

NOTE

Make sure drip hole is at the bottom of panels.

- Peel the back from the self adhesive tape located underneath the body panel.
- Finally, compress using a dry erasable marker board brush so as not to scratch or damage the stainless steel surface.

7. ENTRANCE DOOR

7.1 COACH ENTRANCE DOOR

An air operated “sedan type” entrance door, with an air door cylinder and damper assembly are installed under the right hand dash. The opening and closing door speed cycle is adjustable by a damper mounted in parallel with the door cylinder on the door hinge (Fig. 16). Door activation is controlled by a relay panel, located near the defroster and wiper motors. The accessory air reservoir supplies air to this system.

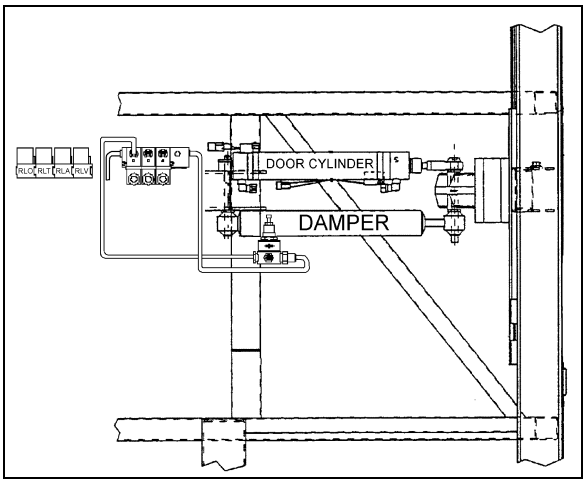

FIGURE 16: DOOR CYLINDER AND DAMPER

The door is held in the closed position during coach operation by a two air cylinder locking mechanisms (Fig. 17). Air cylinders with return spring in the cylinder body are used. Air cylinders are controlled by an electrically operated solenoid valve energized by a rocker switch located under the right hand dashboard.

To open the door, initial movement of the rocker switch de-energizes the air lock solenoid valve, venting the door locking cylinders. The return locking spring pulls the door lock away from the latch, unlocking the door. Door movement starts only when pressure in the central air door lock is below 10 psi. The “air cylinder open solenoid valve” opens and allows air to flow to the door cylinder, “the air cylinder close solenoid valve” exhausts air from the rod side of the cylinder.

To close the door, initial movement of the switch energizes the “air cylinder close solenoid valve” and air flows to the cylinder by its rod side port. The “air cylinder open solenoid valve” exhausts air from cylinder. When entrance door latch is grounded with the door frame, the air lock solenoid valve is de-energized and loads the door lock cylinders. The cylinder moves the door lock in a position which engages a latch on the entrance door, holding the door positively closed. Emergency exit valve, which opens the air valve circuit should be used only in emergencies, or when the door control system does not function properly.

Refer to the air system schematic diagram annexed at the end of section 12, “Brakes” and to page 22 of the wiring diagram.

7.1.1 Operation

The air-operated door is controlled from inside the coach by two push-button switches located on the R.H. dashboard.

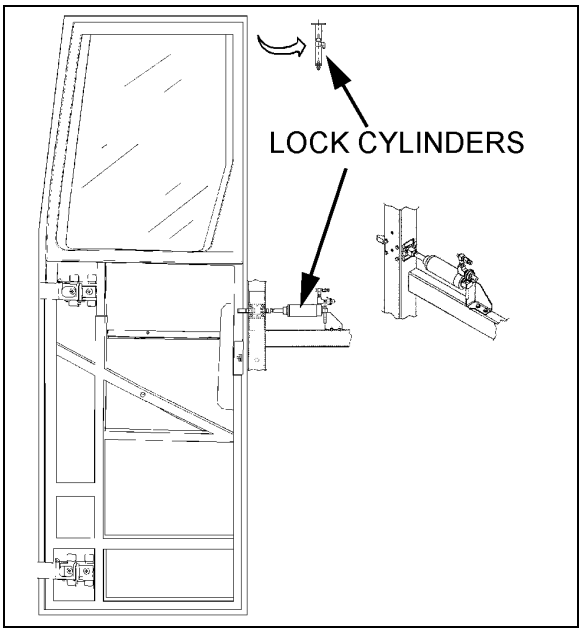

FIGURE 17: COACH ENTRANCE DOOR

Opening and closing of the door from outside the coach is accomplished by a momentary toggle switch located near the coach model nameplate (Fig. 18).

To close the door, the switch must be pushed towards the rear of the coach and held in position until the door has completed its movement.

To open the door, the switch must be pushed towards the front of the coach and held in position. When the door reaches the fully opened position, the system will keep pressure in the cylinder locking the door in that position. The door can be stopped in any position by

releasing the switch. The door is not locked in position when not fully opened or closed.

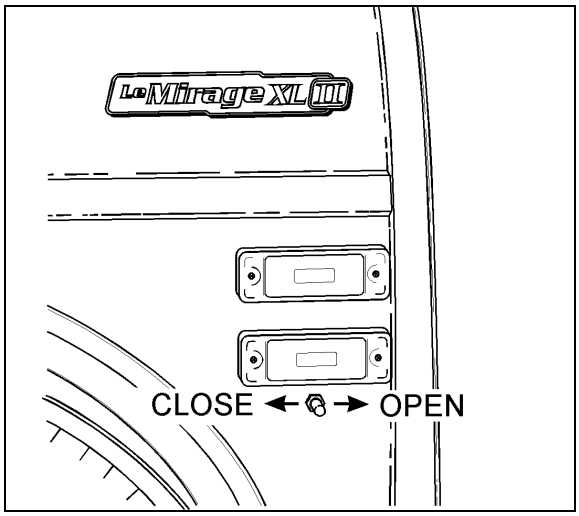

FIGURE 18: ENTRANCE DOOR CONTROL SWITCH

If the door has been locked with the key, a lever on the door can be moved to unlock.

7.1.2 Emergency Exit Valves

From inside the vehicle, an emergency exit valve located near the door on the dash panel, releases the pressure from the lock cylinder. From the exterior, an emergency exit valve located in the front service compartment, also releases the air from the lock cylinder.

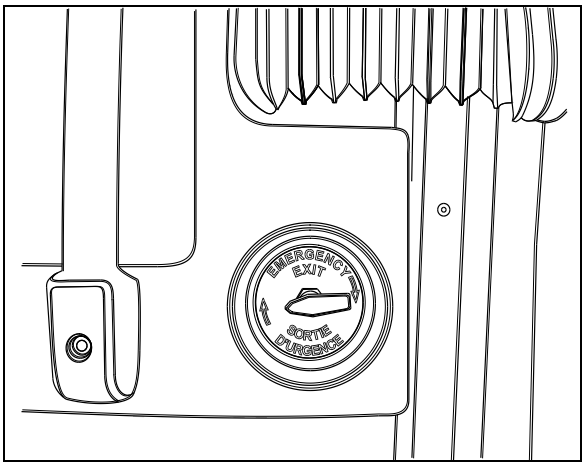

FIGURE 19: EMERGENCY EXIT VALVE 18321

Without Air and/or Without Electricity

If the air pressure drops while the coach has or hasn't any electricity, the spring loaded cylinders will unlatch the door. In such a case, unlock the door by moving the lever on the door or by using the key, then open the door manually.

With Air but Without Electricity

From inside the vehicle, turn the emergency exit valve to the "UNLOCK" position. Move the lever. From the exterior, turn the emergency exit valve to the "UNLOCK" position. Open the door. Close it, lock with the key and reset the outside emergency exit valve to the "NORMAL" position.

7.1.3 Door Cycle Speed Adjustment

To do any adjustment, remove the two panels located next to the door hinge, as well as the door's upper hinge control.

⚠ CAUTION ⚠

It is important to make sure that damper does not reach end of stroke when door is completely closed or opened. The door cylinder must stop the door on opening. Screw or unscrew rod end to adjust if necessary.

To adjust opening and closing cycle speed on damper (Fig. 20):

1. Remove the damper from the vehicle and hold it vertically with the lower eye or pin attachment in a vice. Use clamp plates to prevent damage.
2. Fully close the damper while turning the dust cap or piston rod slowly CCW until it is felt that the cams of the adjusting nut engage in the recesses of the foot valve assembly (Fig. 20).

NOTE

In figure 20, if there is an indentation (B) in the dust cap (C) and the cover shows two holes (A), the damper is fitted with a bump rubber (D). If so, fully extend the damper and insert a round bar or screwdriver through the holes. Push the bump rubber down and remove. Remove the split plastic collar (E) (if fitted) from the piston rod.

3. The damper may have already been adjusted. Therefore check whether the damper is adjusted or not by keeping it closed and gently turning further CCW, counting at the same time the half-turns until a stop is felt. Stop turning and do not force.
4. While keeping the damper closed, make two CW half-turns. In case of prior adjustment, add the number of half-turns previously counted. The total range is about five half-

turns. Pull the damper out vertically without turning for at least 3/8" (1cm) to disengage the adjusting mechanism. The dust cap or piston rod may now be turned freely.

NOTE
Where a bump rubber was installed, refit same inside the dust cap and by fully closing the damper, the rubber will seat again at top of the dust cap. Refit the split plastic collar E (Fig. 20).

5. The damper can now be refitted in the vehicle.
6. Reinstall panels and entrance door hinge cover.

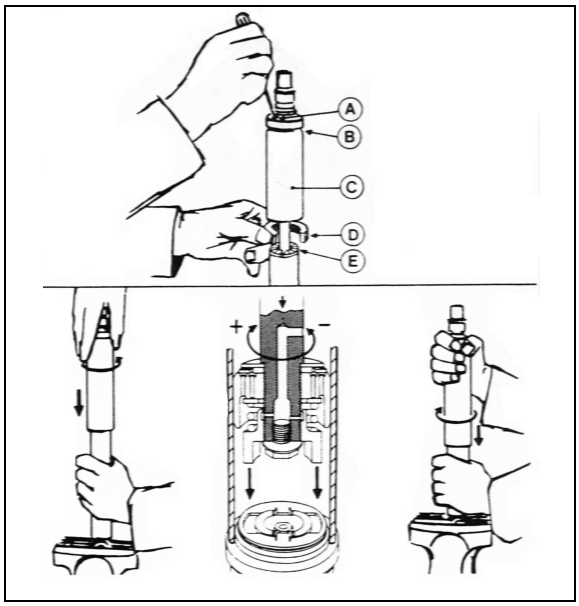

FIGURE 20: DAMPER

7.1.4 Horizontal And Vertical Adjustment

Before attempting to correct any door operating problem by adjusting any part of the air cylinder assembly, first perform the following mechanical checks and procedure.
Check around the perimeter of the door for binding. If any binding is found, adjust as follows:

1. Remove the screws and the plastic molding covering each of the hinges.

NOTE
Ask an assistant to help you to perform the following adjustments.

2. Remove the Allen button head screw and the washer retaining the rod end with bearing to the upper hinge. See figure 21.
3. Support the door with a wooden block and a hydraulic jack.
4. Loosen the horizontal bolts retaining the door to the hinges. Adjust the door horizontally and vertically with the jack. Tighten the bolts to 30-36 Lbf-ft (40-50 Nm). Remove the jack and the wooden block.

⚠ CAUTION ⚠
Make sure the front side door does not interfere with the exterior panel.

5. Pull and fasten the rod end to the hinge with the washer and the button screw.
6. Screw the plastic moldings covering the hinges.

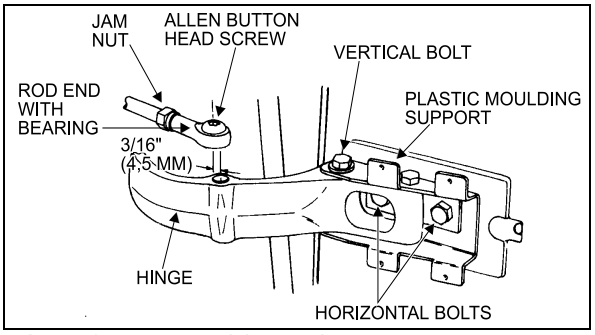

FIGURE 21: UPPER DOOR HINGE 18058

7.1.5 Seal Compression Adjustment

1. Turn the emergency exit valve to the "UNLOCK" position and close the door.
2. From the outside of vehicle, insert a straight edge in the gap along the door outside perimeter. Measure the distance between the door frame and the door outside surface at the door four corners (refer to figure 22).

NOTE
The front measurements are the most important. If required, ask an assistant to help you to perform the following adjustments.

3. If required loosen the bolts retaining the door to the hinges. Adjust the bolts to obtain the proper seal compression.

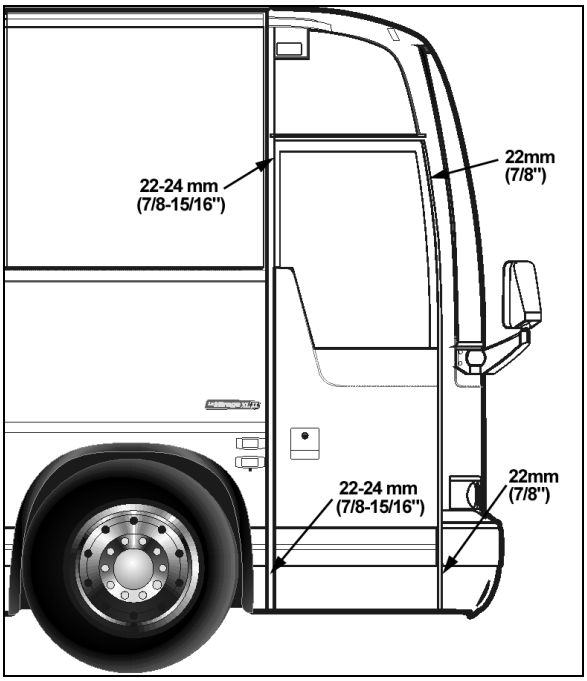

FIGURE 22: SEAL COMPRESSION ADJUSTMENT

7.1.6 Door Seal Replacement

1. Inspect the seal; if cracked or torn, it must be replaced:
2. Remove the old seal and with a sharp edge knife, scrape tape left on the fiberglass door surface.
3. Sand the surface of the door where a new seal will be applied with 240 grit sandpaper.
4. Clean the surface with alcohol.

⚠ CAUTION ⚠
Wear rubber gloves and do not smoke when cleaning.

5. Peel of protective paper from the seal. Position the seal flush with the top, sides and lower edges of the door.
6. Progress slowly all around the door.
7. Cut the seal and glue both ends with LOCTITE 414 glue.
8. To assure bonding, press a small roller on top of the new seal.

7.1.7 Troubleshooting

SYMPTOM	PROBABLE CAUSE	REMEDY
DOOR WILL NOT OPEN FROM EXTERIOR SWITCH.	Manual door locks engaged.	Release manual door locks.
	Upper and lower solenoid locks do not disengage.	Check voltage at solenoid locks when door is open. If the voltage is 24 volts then replace solenoid #641217. Else, check circuit power.
	Relay module do not receive current.	Reset breaker "ON" or check batteries power supply.
	Opening solenoid door does not receive current.	Check voltage at opening solenoid door. If the voltage is 24 volts then replace it. Else replace control relay.
	Switch malfunction.	Replace switch.
DOOR WILL NOT CLOSE FROM EXTERIOR SWITCH.	Switch malfunction.	Replace switch.
	Solenoid failure.	Check voltage at solenoid. If the voltage is 24 volts then replace solenoid. Else replace control relay.
DOOR WILL NOT OPEN FROM INTERIOR SWITCH.	Manual door locks engaged.	Release manual door locks (open position) from vehicle exterior.
	Upper and lower solenoid locks do not disengage.	Check voltage at solenoid locks when door is open. If the voltage is 24 volts then replace solenoid #641217. Else, check circuit power and replace control relay.
	Module relay does not receive electric current.	Reset breaker "ON" or check batteries power supply.
	Door opening solenoid does not receive current.	Check voltage at door opening solenoid. If the voltage is 24 volts then replace it. Else replace control relay.
	Switch malfunction.	Replace switch.
	Upper lock stays engaged	Lubricate upper lock assembly. Check wear and replace parts if necessary.
DOOR WILL NOT CLOSE FROM INTERIOR SWITCH.	Switch malfunction.	Replace switch.
	Door closing solenoid does not receive electric current.	Check voltage at door closing solenoid. If the voltage is 24 volts then replace it. Else replace control relay.
DOOR WILL NOT OPEN AFTER DRAINING AIR FROM SYSTEM BY EMERGENCY VALVE(S).	Manual door locks engaged.	Release manual door locks (open position) from vehicle exterior.
	Damper cylinder blocks the door.	Adjust or replace damper cylinder.
	The upper lock blocks the door.	Adjust upper lock. Lubricate upper latch bolt. Adjust upper latch height.
DOOR LOCKS STAY ENGAGED WHEN DOOR IS OPEN.	Power supply is cut at solenoid.	Place switch in open position.
	Lock solenoid does not disengage.	Check voltage at solenoid lock when door is OPEN. If the voltage is 24 volts then replace solenoid #641217. Else, check circuit power and replace control relay.
DOOR DO NOT LOCK WHEN DOOR IS CLOSED.	Emergency valve is open.	Close emergency valve.
	Lock solenoid stays electrified.	Check latch bolt ground on door frame. If needed clean locks for better contact. Check ground circuit.
	Lock solenoid works in reverse.	Reverse air hoses at solenoid locks.
	Relay does not function.	Replace relay.

7.1.8 Lubrication

Part	Lubricant	Frequency
Latches Upper door catch Door cylinder rod end with bearing grease fitting	Low temperature grease	Every six months
Door locking mechanism	White grease	Every six months
Key hole Damper pins Hinges	Low viscosity oil	Every six months

7.2 ENTRANCE DOOR (MTH)

There are three ways of unlocking the entrance door from the inside of vehicle. The two first consist in actuating the rocker switch on the dashboard, but this last operation will also unlock the baggage compartments. Finally, you can unlock the door by sliding its lock lever to the left. If the orange tab on the door lock lever is visible, the door is unlocked.
You may lock/unlock the entrance door from the outside with the lock key provided with the vehicle. Turn key CCW to lock and CW to unlock the entrance door.

7.2.1 Keyless Entry System

With this system, you can lock or unlock the entrance door as well as the baggage and service compartment doors. The keyboard is located below the entrance door handle. The module is pre-programmed by the manufacturer and this code can not be deleted. Moreover, you can program your own entry code. Refer to the "Owner's Manual" for instructions on how to program your own entry code.
When you use the keyless entry system, the keyboard and stepwell lights illuminate. Do not push the buttons with a key, pencil or any other hard object as it could damage the buttons.
Although each button is provided with two digits separated by a vertical line, there is only one contact per button. Always press the center of the button (between the two digits, on the vertical line).
If you let more than five seconds pass between each button press, the system shuts down, and you have to enter your code again. If the keyless entry system does not work properly, use the key to lock or unlock entrance or compartment doors. To know more about the keyless system, refer to the "Owner's Manual".

NOTE
You must unlock the entrance door before you unlock with the appropriate key any baggage or service compartment doors.

7.2.2 Door Adjustment

Check around the perimeter of the door for binding. If any binding is found, adjust as follows:

7.2.3 Horizontal And Vertical Adjustments

1. Remove the screws and the plastic molding covering each of the hinges.

NOTE
Ask an assistant to help you to perform the following adjustments.

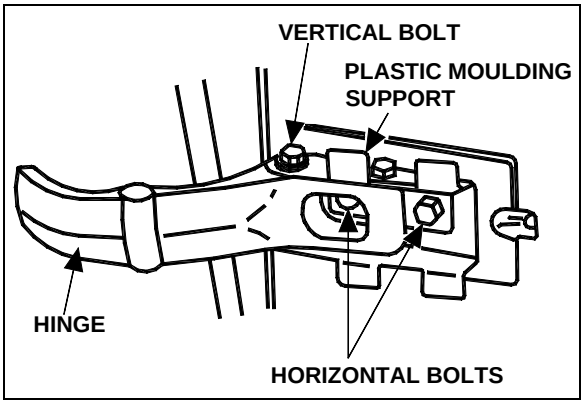

FIGURE 23: ENTRANCE DOOR (MTH) 18058

2. Support the door with a wooden block and a hydraulic jack.
3. Loosen the horizontal bolts retaining the door to the hinges. Adjust the door horizontally and vertically with the jack. Tighten the bolts to 30-36 Lbf-ft (40-50 Nm). Remove the jack and the wooden block.
4. Check door fit.
5. Using the screws, fasten the plastic trim to cover the hinges.

7.2.4 Seal Compression Adjustment

1. Close the door, from the outside of vehicle, insert a straight edge in the gap along the door outside perimeter. Measure the distance between the door frame and the door outside surface at the door four corners (refer to figure 22).

NOTE
The front measurements are the most

important. If required, ask an assistant to help you to perform the following adjustments.

2. If required loosen the bolts retaining the door to the hinges. Adjust the bolts to obtain the proper seal compression.

7.2.5 Door Seal Replacement

1. Inspect the seal; if cracked or torn, it must be replaced:
2. Remove the old seal and with a sharp edge knife, scrape tape left on the fiberglass door surface.
3. Sand the surface of the door where a new seal will be applied with 240 grit sandpaper.
4. Clean the surface with alcohol.

⚠ CAUTION ⚠

Wear rubber gloves and do not smoke when cleaning.

5. Peel of protective paper from the seal. Position the seal flush with the top, sides and lower edges of the door.
6. Progress slowly all around the door.
7. Cut the seal and glue both ends with LOCTITE 414 glue.
8. To assure bonding, press a small roller on top of the new seal.

7.2.6 Door Lubrication

Part	Lubricant	Frequency
Latches Upper door catch	Low temperature grease	Every six months
Door locking mechanism	White grease	Every six months
Key hole Hinges	Low viscosity oil	Every six months

7.2.7 Door Latch Mechanism

Generally, when the latch mechanism malfunctions, a number of causes may be responsible for this situation. No single procedure will correct this situation. It is best to remove the protective cover and to look for binding, used or bent parts. Operate the latch mechanism and try to find where any binding occurs. Replacing a part or slightly bending a rod should be enough. Remember, having a global understanding of the mechanical activity will generally lead you to the cause of the problem, and ultimately to an easy repair.

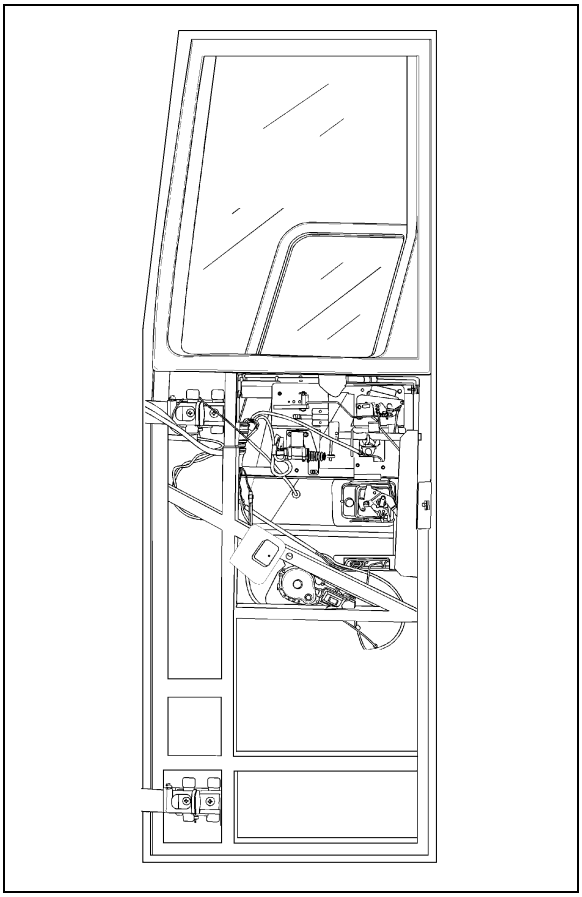

FIGURE 24: ENTRANCE DOOR (MTH, TYPICAL)

8. BUMPER REMOVAL AND INSTALLATION

8.1 FRONT BUMPER

The front bumper is hinged to give access to the spare wheel and tire compartment. Pull the handle located in the front service to open the spare wheel and tire compartment. Bumper must first be tilted down before its removal. Two people are required to remove and install the front bumper. Safely support the bumper and remove the two bolts on each bumper side to separate the bumper from the spare wheel compartment door. To install bumper, reverse the removal procedure.

⚠ WARNING ⚠

Front bumper is heavy. Use proper lifting equipment to support the bumper during the removal and installation operations to avoid personal injury.

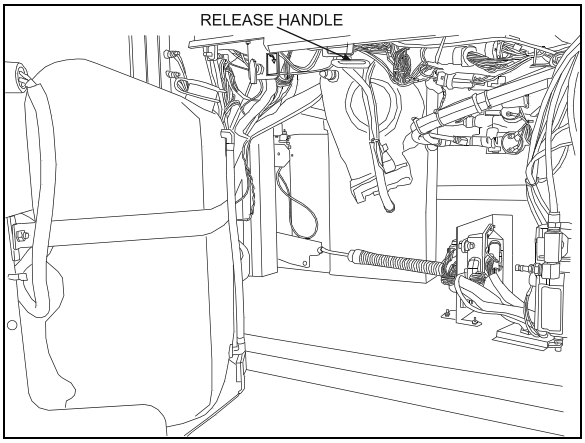

FIGURE 25: FRONT BUMPER RELEASE HANDLE

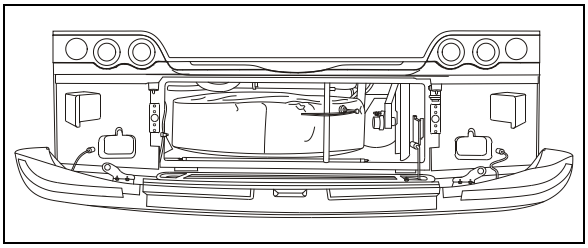

FIGURE 26: FRONT BUMPER

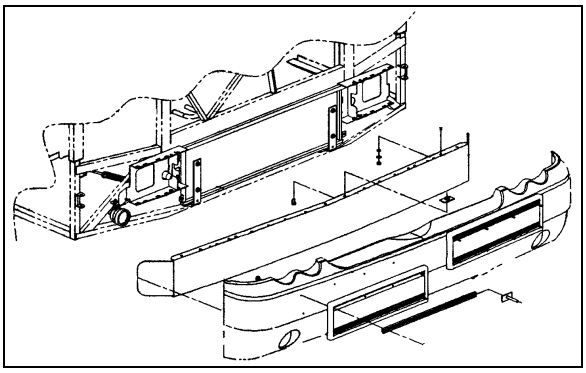

FIGURE 27: FRONT BUMPER REMOVAL 18565

8.2 REAR BUMPER REMOVAL

MTH and coach model rear bumpers are very similar, so is their removal and installation.

1. Remove three bolts on each side holding bumper to vehicle and remove bumper.
2. To install bumper, reverse the procedure.

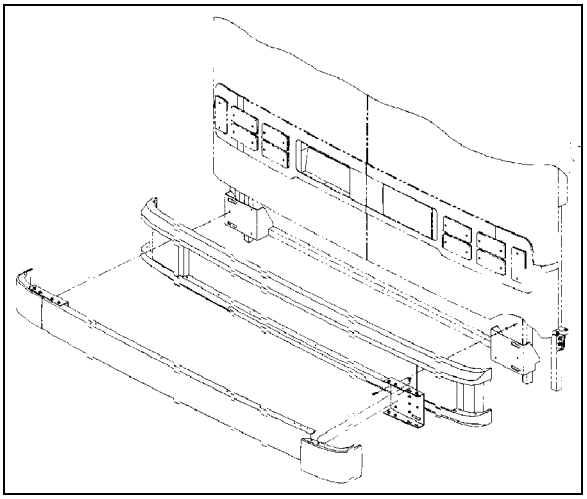

FIGURE 28: REAR BUMPER

9. DRIVER'S OR ENTRANCE DOOR POWER WINDOW

Driver's and entrance door power windows are similar, only the door opening mechanism is different. If the window or regulator is defective, it must be replaced. The following instructions refer to figure 29 or 30:

9.1 DRIVER'S POWER WINDOW

9.1.1 Window Removal And Installation

1. Open the door and remove the door finishing panel.
2. Remove the screws holding the window to the lifting mechanism. Move aside the holding plate.
3. Lower the window completely to detach from the opening.
4. Reverse the procedure to install.

9.1.2 Regulator Removal And Installation

1. Open the door and remove the door finishing panel.
2. Remove the screws holding the window to the lifting mechanism. Move aside the holding plate.
3. Unfasten the two bolts fixing the regulator assembly. Disconnect connector from regulator.
4. Reverse the procedure to reinstall.

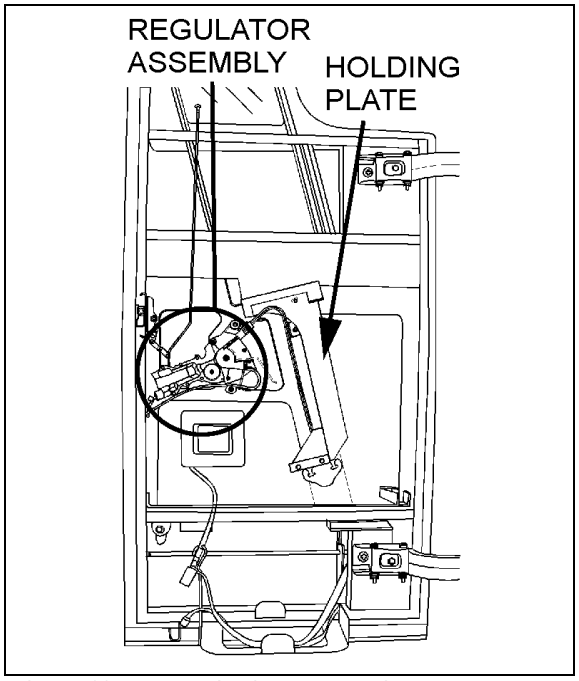

FIGURE 29: DRIVER'S POWER WINDOW

9.2 ENTRANCE DOOR POWER WINDOW

9.2.1 Window Removal And Installation

1. Open the door and remove the door finishing panel.
2. Remove the four bolts fixing the entrance door locking mechanism support to the door.
3. Remove the screws holding the window to the lifting mechanism. Move aside the holding plate.
4. Remove the assembly by slipping it under the vehicle structural members.
5. Lower the window completely to detach from the opening.
6. Reverse the procedure to reinstall.

9.2.2 Regulator Removal And Installation

1. Open the door and remove the door finishing panel.
2. Remove the screws holding the window to the lifting mechanism. Move aside the holding plate.
3. Unfasten the two bolts fixing the regulator assembly. Disconnect connector from regulator.
4. Remove the regulator assembly by slipping it under the vehicle structural members.
5. Reverse the procedure to reinstall.

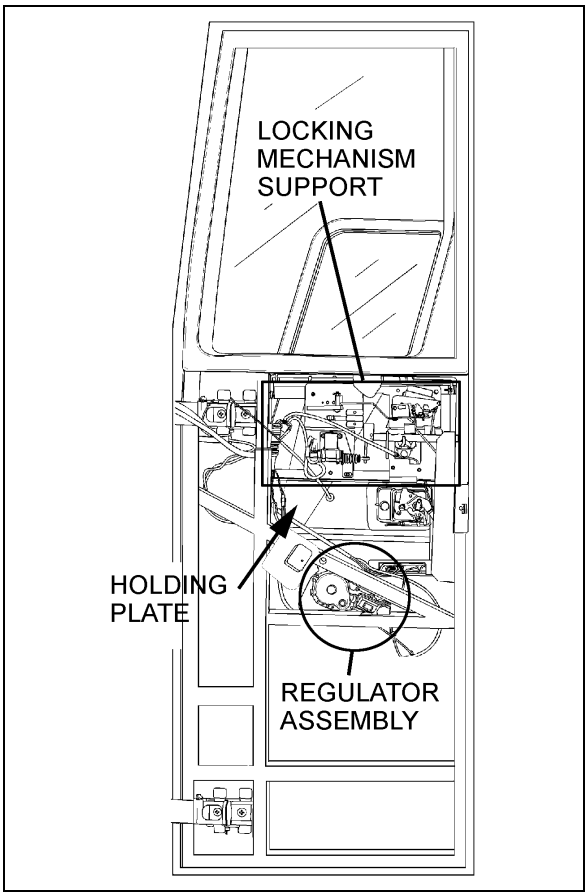

FIGURE 30: ENTRANCE DOOR POWER WINDOW

10. ROOF ESCAPE HATCH

The vehicle can be equipped with one or two escape hatches. The escape hatch is designed to provide years of reliable service with a minimum of maintenance. All components are rust proof, and moving parts are Teflon coated to eliminate need for lubrication. Should water infiltrate the vehicle from the escape hatch, refer to the heading "Sealing" in this section for procedures on how to seal this area.

⚠ CAUTION ⚠

Use of lubricants, paints, or other coatings such as graffiti deterring sprays is not recommended.

Suggested maintenance includes periodic inspection of fasteners for evidence of loosening due to tampering, and regular cleaning with mild soap and water.

Although there are other cleaning solutions available, some contain solvents and other chemicals that can attack the high strength materials used in the production of the escape hatch.

⚠ CAUTION ⚠

Ensure that cleaning solutions are compatible with the materials used on the escape hatch.

Graffiti removing cleaners often contain acetone, ether, lacquer thinner, or other solvents known to destroy the high strength properties of many plastics. Use of these cleaners must be avoided. Graffiti-resisting coatings often leave a sticky residue that interferes with smooth up/down movement of the hatch mechanism. Some of these coatings also contain solvents that will reduce the strength of certain components.

⚠ CAUTION ⚠

Use of these coatings is at considerable risk and should be avoided.

10.1 REPAIR

All components used in the production of the escape hatch are available as service parts, except for one hinge that represents a possible hazard when improperly reattached to a hidden tapping plate, itself often damaged whenever the hinge is damaged. The tapping plate is permanently laminated between the inner and outer cover assemblies, and it cannot be inspected or replaced. It is therefore necessary to replace the entire assembly following damage to the hinge. See figure 32.

⚠ CAUTION ⚠

Hinge assembly is critical and hinge should never be removed from cover assembly. Fasteners used in this assembly are special and have critical torque requirements and tamper-resistant heads to discourage tampering.

10.2 SEALING

1. Open and tilt up the escape hatch cover.
2. Join the 2 ends of the rubber seal.

⚠ CAUTION ⚠

Seal joint should be toward rear of vehicle.

3. Apply rubber adhesive CA-40 (Prévost # 681285) in the gap between the seal ends.
4. Apply Sikaflex 221 sealant (Prévost # 680532) along the outline of the escape hatch on the roof of vehicle.

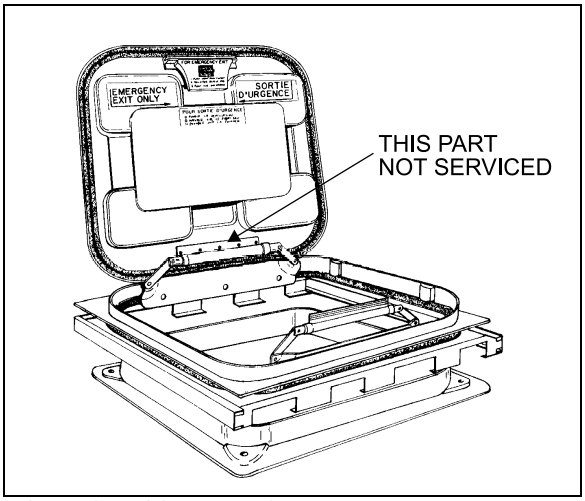

FIGURE 31: ESCAPE HATCH 18104

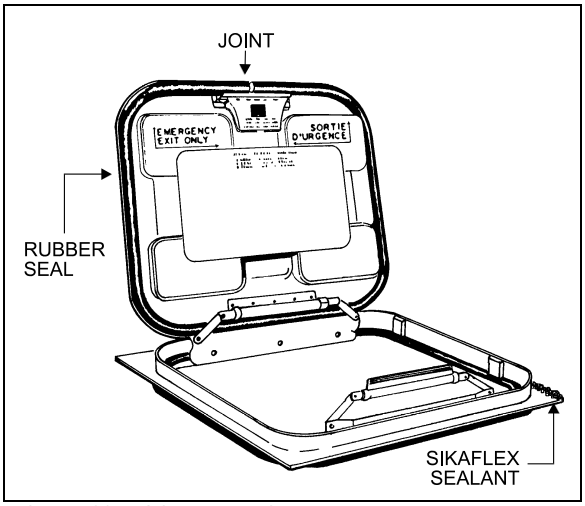

FIGURE 32: ESCAPE HATCH 18105

10.3 Escape Hatch Panel Assembly

The frame of the escape hatch is riveted to the roof of the vehicle. The escape hatch panel assembly can be replaced as a unit and a new panel assembly installed in the existing frame. To remove the panel assembly, remove the 4 bolts fastening the 2 hinges to the escape hatch frame and retain the 4 flat washers. Reinstall the panel assembly by fastening the 2 hinges with the 4 bolts and flat washers removed earlier.

⚠ CAUTION ⚠

When installing, roof escape hatch's hinge must be toward the front of vehicle, to prevent the hatch from being ripped out if accidentally opened while vehicle is running.

10.4 ESCAPE HATCH FRAME

When necessary, the escape hatch frame can be removed and replaced in the following way:

1. Support the frame from inside the vehicle.
2. Remove rivets.
3. Cut the rubber seal with a sharp edge knife and remove the hatch frame.
4. On vehicle top, using the knife, remove as much as possible the remaining rubber seal.
5. Drill holes (if needed) in the new metal frame.
6. Clean both vehicle top and new hatch frame with SIKA 205.
7. Apply rubber adhesive SIKA 221 under the hatch frame surface.
8. Install the frame in place and fix it with rivets.
9. Remove excess adhesive and clean all around.

11. PASSENGER SEATS

XLII-45 coaches can be equipped with any of 3 basic seat models and installed in a variety of seating arrangements:

1. The *"Tourismo 2"* seat is the base model and is available in heights of 40" (102 cm) and 42" (107 cm). Seating arrangement includes 2 card tables which can be folded and removed, and pivoting seats ahead of each card table. Each pair of seats is built on a welded steel frame fastened to the side wall and on a track-mounted pedestal.
2. The *"Silhouette"* seat is an optional model with each pair also built on a welded steel frame and mounted the same way as the *"Tourismo 2"* seat. Standard seating arrangement with "Silhouette" seat includes 2 card tables and 2 pivoting seats. Seating capacity is the same as with the *"Tourismo 2"* seat.
3. The *"V.I.P."* seat model is an optional seat. *"V.I.P."* seats are mounted on one row of paired seats built on a common frame on one side of the vehicle, and a row of single seats on the other side of the vehicle with an off-center aisle. Each *"V.I.P."* seat has its own set of armrests.

Each seat has a easily removable bottom cushion. Upholstery is clipped on the cusion frame for cleaning or replacement. To remove the fabric, simply unclip from the frame. The *"Tourismo 2"* and *"Silhouette"* seats have 3 armrests. The aisle and center armrests can be folded up and down manually, while the window armrest is fixed.

11.1 ROTATING SEATS

1. Remove 1 wing nut holding each seat bottom cushion from under the seat frame.
2. Lift front part of cushions and remove cushions.
3. Remove 4 wing screws fastening seat assembly to seat frame.
4. Pull seat toward aisle and rotate.
5. Align mounting holes and reinstall 4 wing screws.
6. Reinstall seat bottom cushions with wing nuts.

11.2 REMOVING FIXED SEATS

NOTE
Seats on one row are not interchangeable with seats of the other row.

To remove fixed seats, proceed as follows:

1. Remove 1 nut holding each seat bottom cushion from under the front part of the seat frame.
2. Lift front part of cushions and remove cushions.
3. Remove 4 finishing screws holding plastic cover between side wall and seat frame.
4. Remove 2 cap screws, nuts, and washers holding seat frame to side wall and retain the 2 holding brackets. See figure 35.
5. Remove 2 nuts and washers holding seat frame to pedestal rods. See figure 36.

NOTE
Bottom end of rod is coated with Locktite and threaded in a steel block which slides in the floor track. Removal of rod is possible if loosened from block. Otherwise, slide rod and block assembly to the front end of track after removing all seats located in front.

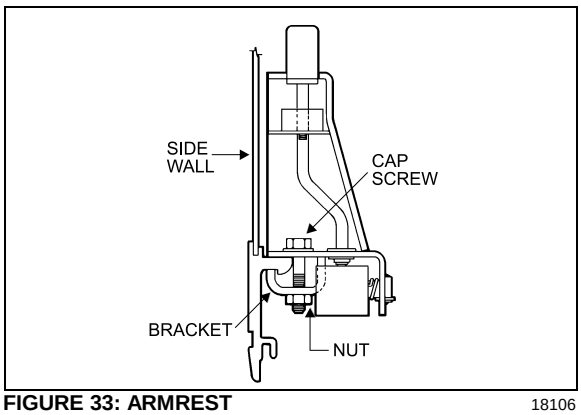

FIGURE 33: ARMREST 18106

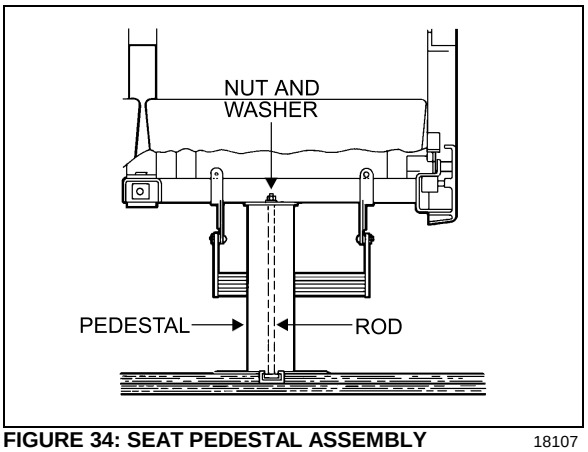

FIGURE 34: SEAT PEDESTAL ASSEMBLY 18107

6. Remove seat assembly.
7. Reverse the above procedure to install seat assembly.

NOTE
On newer vehicles, the rod consists of a carriage bolt inserted in a square plate sliding in the floor track. Removal is possible only by the front or rear end of track.

11.3 UPHOLSTERY MAINTENANCE

Coach seats are lightweight, with foam-padded backs and cushions. For both appearance and wearability, best results are obtained if upholstery is cleaned at regular intervals before dirt, dust and grit have been ground into the fabric. Seat fabric is made of 50% wool, 33% cotton, 9% nylon, and 8% acrylic.

11.3.1 Routine Cleaning

All that is required to remove the dirt is a gentle beating with the hand or the back of a brush. This will bring the dirt to the surface where it is easily removed with a vacuum or brush in the direction of the pile which can easily be recognized by running a hand lightly over the pile. If the fabric becomes excessively dirty, particles of grit will cause gradual wear, reducing the life span of the fabric.

11.3.2 Dry Cleaning

If covers are to be removed for cleaning, dry cleaning is recommended since washing might cause some shrinkage, preventing the covers from being reapplied to the seats without damage. Other than spot cleaning the covers while they are in place, dry cleaning is not recommended, since the resulting fumes could be hazardous in the confines of the coach and the solvent could be detrimental to the foam padding of the seats.

11.3.3 Cleaning With Covers In Place

The most effective and economical method to clean the fabric seat covers is by washing with either an approved foam upholstery cleaner or with a mild household detergent.

Thoroughly vacuum the upholstery. Remove any spots or stains before the seats are washed to avoid a cleaning ring.

Dilute household detergent or liquid foam cleaner according to directions on the container. Pour a small quantity into a flat pan and work into a thick foam with a sponge or brush.

Apply only the foam to the fabric with a sponge or brush. Clean a small area of the fabric at a time with the foam. DO NOT SOAK. Rub vigorously. Sponge the suds from the fabric with a clean sponge or cloth moistened with water. Rinse the sponge or cloth often and change the water when it becomes dirty.

Allow the upholstery to dry completely before the coach goes back into service. To speed up drying, excess moisture can be blown off the fabric with compressed air.

⚠ CAUTION ⚠
Oil in the air line will soil the fabric. Blow the line clear and test air discharge against a plain white piece of paper. It is also effective to press the edge of a flat hardwood stick down on the cushion and slowly draw it across the fabric.

Even very soiled areas can be returned to their original appearance by a thorough cleaning, but a regular schedule of cleaning that keeps the upholstery reasonably clean at all times will greatly enhance the life span of upholstery.

12. TARABUS FLOOR COVERING REPAIR OR REPLACEMENT

On XL2 vehicles equipped with “Tarabus” covering, it is possible to replace or repair this covering. The purpose of this paragraph is to explain the steps to be followed to ensure the best results and adherence.

MATERIAL

Part No	Description	Qty
680028	Adhesive, Tarabus Floor Covering (White)	A/R
684655	Adhesive, Contact (3M)	3.8L
684654	Adhesive, Contact (3M)	18.9L
680532	Sikaflex 221 Gray	A/R

NOTE
Material can be obtained through regular channels.

1. Remove number of passenger seats required to perform repair.
2. Cut and remove damaged section of floor covering.

NOTE
It would be preferable to cut under two rows of seats so that repair is not as noticeable.

3. Clean plywood using a scraper.

NOTE
Make sure that no staples are sticking out beyond surface. Adjacent plywood sheets must be leveled.

4. Fill up holes and imperfections using MAPI PRP 110 then sand.
5. Remove dirt and adhesive residue.

⚠ CAUTION ⚠
Do not leave floor covering folded down except temporarily during installation.

6. Apply floor covering adhesive (680028) onto plywood using a serrated spreader with 1/8-inch serration. If required, apply contact adhesive (3M) (684655 or 684654) onto aluminum molding and also onto section of floor covering, which will be in contact with molding (refer to figure 35).

NOTE
Allow adhesive to dry (3 to 5 minutes).

7. Compress floor covering using a roller so as to remove any trapped air bubble.
8. Apply Sikaflex 221 gray sealant (680532) alongside passenger seat fixing tracks (refer to figure36).

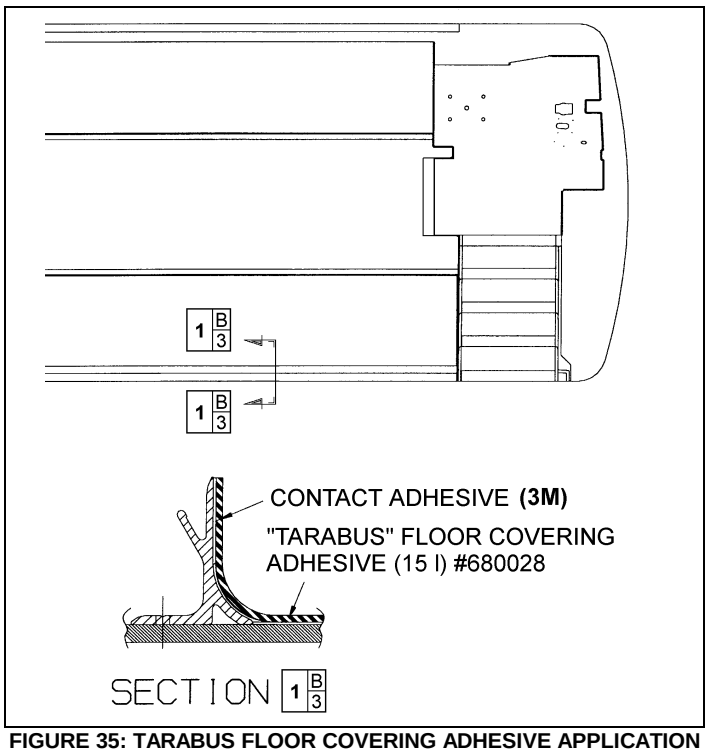

FIGURE 35: TARABUS FLOOR COVERING ADHESIVE APPLICATION

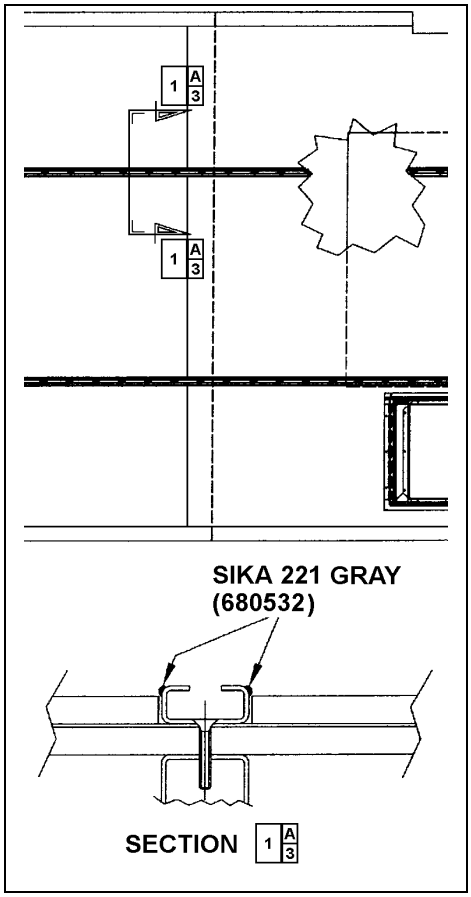

FIGURE 36: APPLICATION OF SIKA 221 GRAY

12.1 FRONT STEPS REPLACEMENT PROCEDURE

MATERIAL

Part No	Description	Qty
682989	Anti-silicone	A/R
683097	Sika 205 (1 liter)	A/R
685101	Sika Remover 208	A/R
683916	Sika 215 (1 liter)	A/R

1. Cut and remove damaged step(s).
2. Remove dirt and adhesive residue.

NOTE
In wintertime, condensation and cold temperature may greatly influence bonding parameters. Working area must be at a temperature sufficient to prevent reaching condensation point. Mechanically preheat working area (heat lamp or heat gun) or wait until vehicle reaches room temperature.

PREPARATION OF "TARABUS" FLOOR COVERING

1. Sand under step using "Scotchbrite".
2. Clean using anti-silicone (refer to Section A).

Section A Alcohol or Anti-silicone

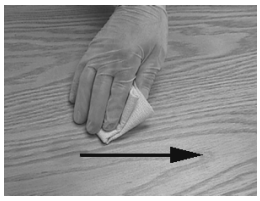

1. **Apply**

CHIX cloth

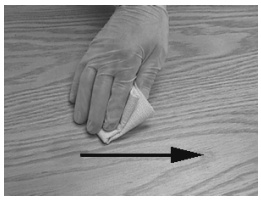

2. **Dry immediately**

Blue cloth

3. **Allow drying**

Mandatory	**Minimum time : Wait for product to evaporate**
	After 2 hours: Start cleaning operation again
Before applying any other product	If surface seems dusty, greasy or with finger marks, start cleaning operation again.

3. Apply Sika Primer 215 (refer to Section D).

Section D Sika Primer 215

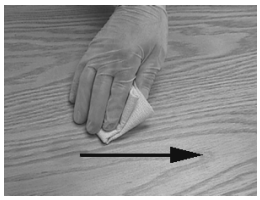

1. **Shake bottle to mix product**

2. **Apply a thin layer**

CHIX cloth

3. **Allow drying**

Mandatory	**215**	**Minimum time : 20 minutes**
		After 2 hours : Remove dust using damp cloth (pure water)
Before applying any other product		If surface seems dusty, dust using damp cloth.
		If surface seems greasy or with finger marks, reactivate with Aktivator.

PREPARATION OF FIBERGLASS

1. Clean using anti-silicone (refer to Section A).
2. Apply Sika 205 (refer to Section B).

Section D Sika Primer 215

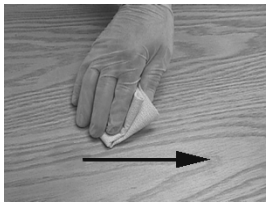

1. **Apply**

CHIX cloth

2. **Allow drying**

Mandatory	**Minimum time**	**- For a smooth surface (aluminum, stainless, steel, fiberglass (gelcoat side), etc.):**	**2 minutes**
		- For a porous surface (fiberglass (non gelcoat side), etc.)	**10 minutes**
	After 2 hours : Reactivate surface with Sika 205		
Before applying any other product		If surface seems dusty, greasy or with finger marks, start operation again.	

XL2 VEHICLE FRONT STEPS GLUING

1. Use step nosing to measure and cut necessary length of white safety strip.
2. Use a screw to check depth of countersinking in step nosing. Screw top must not stick out beyond the aluminum surface. Countersink if needed.

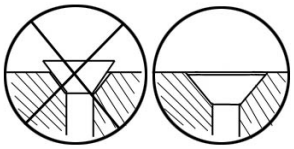

3. Apply some Sika 252 onto the step; make sure to cover the whole surface of the step. Use a serrated spreader with 1/8-inch serration to spread Sika.
4. Apply a bead of Sika 221 onto the perimeter of the step.
5. Install step and press with hands. If Sika overflows, clean with Sika 208. Repeat previous stages for each step if applicable.
6. Remove protective film from double-coated self adhesive tape located underneath step nosing, position step nosing then press. Drill and fix using screws.

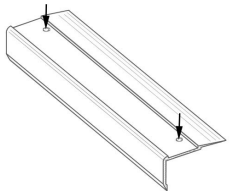

7. Clean top of step nosing using Sika 205 (refer to Section B).

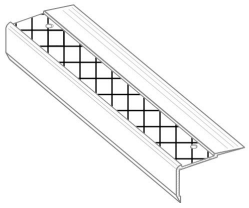

8. Apply some Sika 221 onto white safety strip, spread with a spatula to cover the whole surface.

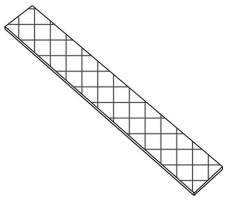

9. Position white safety strip then press using hands. If Sika overflows, clean with Sika 208.

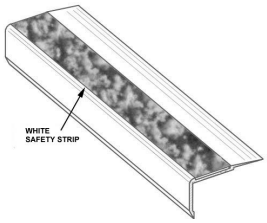

10. Temporarily fix white safety strip with a piece of duct tape, leaving 1 to 2 inches free at each end.

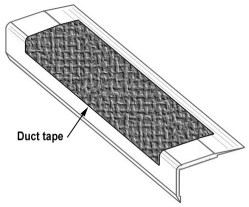

11. Apply some masking tape onto the step perimeter, clean using Sika 205 (refer to Section B) then apply a bead of Sika 252 black. Smooth out the joints then remove masking tape.
12. Install weights onto the steps. Minimum waiting time: 2 hours.

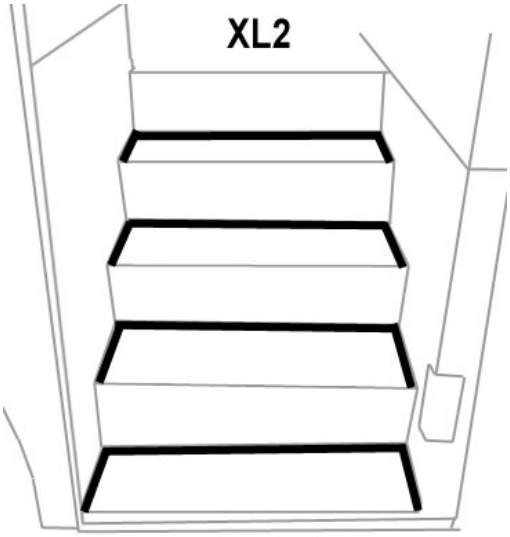

12.2 WELDING OF JOINT BETWEEN WHITE SAFETY STRIP AND “TARABUS” FLOOR COVERING

1. Pre-heat welding torch;

   Set welding torch to position #4.5 (temperature of 500 °C),

   Heating time: 5 minutes.
2. Before welding, visually ensure that a 1 to 1.5 mm gap exists between white safety strip and “Tarabus” floor covering. Use a knife if this is not the case.

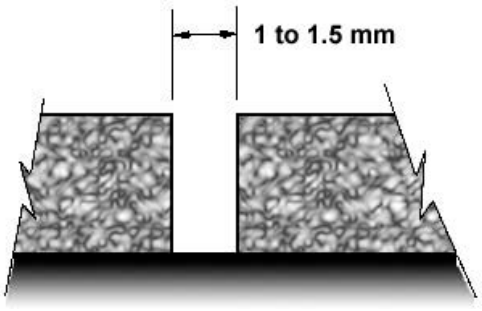

NOTE
There should be no excess of adhesive on top of surfaces, clean if required using “All-Sol”.

3. Chamfer the joint.

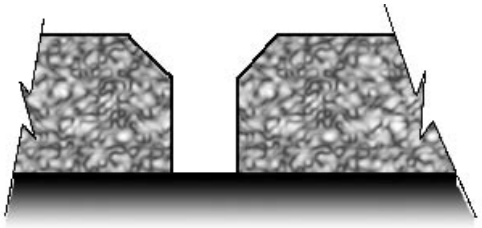

NOTE
The chamfer width must always be less than the filler bead diameter (between 2.5 and 3 mm).

4. Use chamfer knife. **Be careful not to overcut or to cut to the side to prevent damaging "Tarabus" covering.**



5. Add (about 6 inches) some length to the required length of filler bead to make the joint then cut.
6. Take position with welding torch. The proper position is with a slight slope to the rear.



7. Once the welding torch is ready, insert the filler bead into the nozzle and immediately start welding. Move in a regular manner while pressing slightly with torch.



8. The heel of the fast nozzle must not lean against "Tarabus" covering (always parallel to the surface).

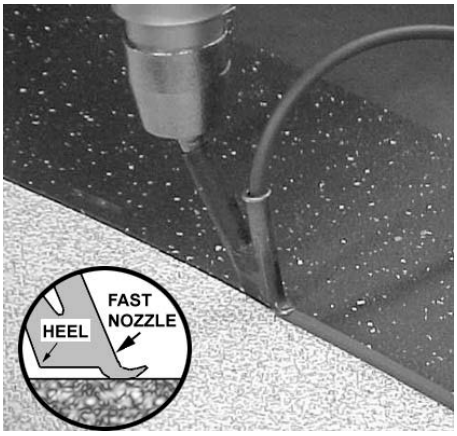

9. Allow cooling down of filler bead (about 5 minutes).

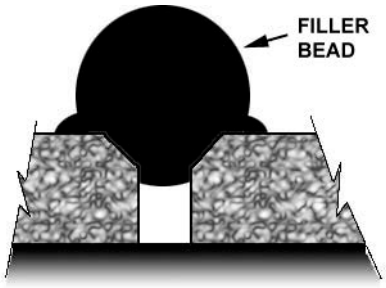

10. Shave filler bead to make it level to the floor. Use supplied knife designed for that purpose.

NOTE
To facilitate the cut, you can spray some soapy water onto the joint.

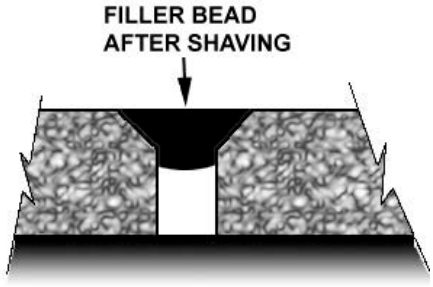

⚠ CAUTION ⚠
The procedure for turning the torch off must absolutely be followed. If this step is not taken, the element may burn.

11. Set temperature potentiometer to “0” position. Fan will evacuate residual heat. Leave the torch in operation as it is for 3 minutes.
12. Perform adhesion test using the tip of a flat screwdriver; apply a slight pressure on the joint.

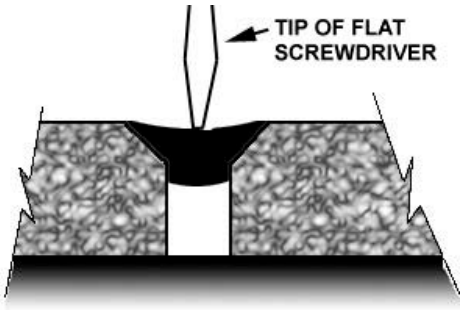

13. If welding was not performed properly, there will a loss of adhesion on one side. If this is the case, repair the joint.

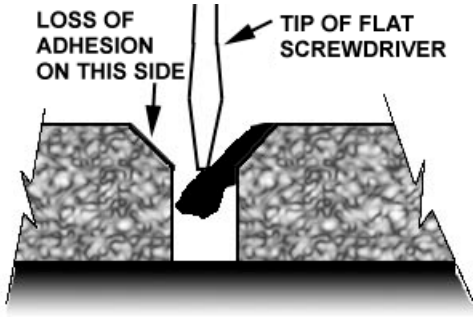

12.3 REPAIR OF A WELDED JOINT

NOTE
In wintertime, condensation and cold temperature may greatly influenced bonding parameters. Working area must be at a temperature sufficient to prevent reaching condensation point. Mechanically preheat working area (heat lamp or heat gun) or wait until vehicle reaches room temperature.

1. Using a knife, remove portion of joint to be repaired.

NOTE
Loss of adhesion may be local. If this is the case, repair may also be local.

2. Chamfer the joint again as indicated in paragraph 12.2, Section: WELDING OF JOINT BETWEEN WHITE SAFETY STRIP AND “TARABUS” FLOOR COVERING.
3. Re-weld the joint as indicated in paragraphs 6, 7 and 8. Use your thumb to hold the filler bead end.

⚠ WARNING ⚠
Nozzle is hot.



4. Always add an extra inch of filler bead at the beginning and at the end of repair.

5. Perform steps indicated in paragraphs 9, 10 and 11.

13. COACH SIDE WINDOWS

Nine passenger side windows are provided on each side on XL2-45. They are made of fixed, single or double-glazed, heat absorbing AS-3 glass. Windows are mounted in painted aluminum extrusions, which hold the glass in place from the top rail of the coach. The extrusion also serves as a hinge to allow the window to swing open when needed. The single-glazed windows are made of tinted tempered safety glass, while the double-glazed windows are made of tinted tempered safety glass outside and clear tempered glass inside.

13.1 EMERGENCY EXIT WINDOWS

Three of the windows on curb side of the XLII-45 serve as emergency exits, while there are four on driver's side. See figure 37. Except for the top window side, the three other glass sides are unprotected, which causes the workers to be exceptionally careful when manipulating or installing such windows.

In addition, when it becomes necessary to lay down the unprotected edges of the glass window, never use a steel or concrete floor support. It is recommended to use a wooden support, even better, a padded surface.

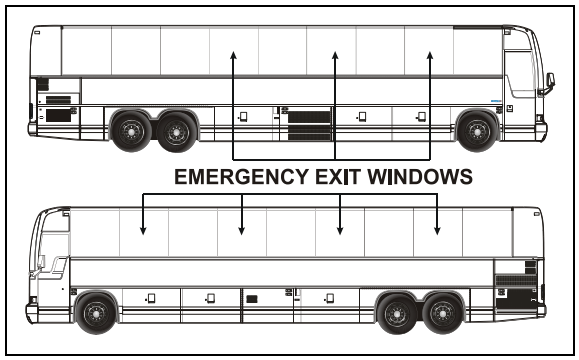

FIGURE 37: XL2-45 COACH

An emergency exit window can be opened by pulling the lower part of the release bar to disengage the safety latches, and then by pushing out the window frame (Fig. 38).
Emergency operating instruction decals are affixed under each emergency exit window. To close the window, pull back the window and push down the release bar.

13.1.1 Emergency Exit Release Bar

The emergency exit release bar system is generally maintenance free. It has been designed to answer the twenty pound resistance criteria for opening the emergency window. If this handle should be replaced:

1. Remove the screws and bolts securing it to the emergency exit window;
2. Install a new release bar, reverse the procedure.

NOTE
Check the legal twenty pound maximum resistance to be sure to comply with regulations.

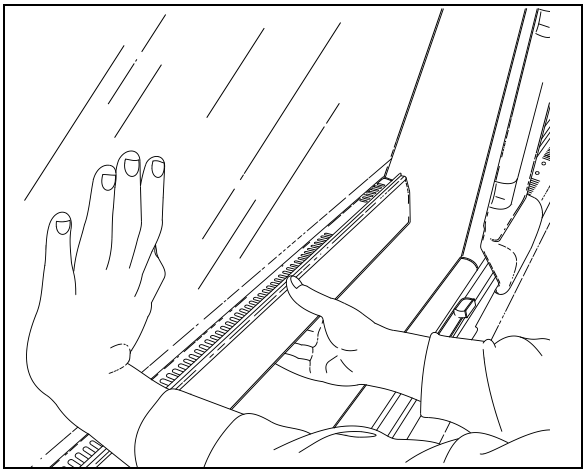

FIGURE 38: EMERGENCY EXIT WINDOW

13.1.2 Emergency Exit Window Adjustment

Emergency exit windows should be checked periodically for easy opening and closing. Pulling the lower part of the release bar with both hands placed near the safety latches should disengage both locks on the window simultaneously. The tension required to release the window should not exceed twenty pounds (9 kg) of force.
The release bar mechanism itself has been designed such as no adjustments are necessary. If too much effort is required to disengage the locks when pulling the release bar or if the window doesn't close tightly or rattles, check for interference by foreign objects or nearby parts into mechanism, such as the microswitch, rubber seal, wires, etc. Correct situation immediately.

NOTE
Tangs on the lock must be in a horizontal position.

13.1.3 Emergency Exit Window Replacement

1. Lift the bar release system;

2. Remove the stop blocks from the top exterior of the window.
3. Push the glass window out ninety degrees (90°).

⚠ WARNING ⚠
The window may fall out.

4. The window is free and can be unhooked.
5. Reverse the procedure to install a new emergency exit window.

14. ELECTRIC AWNING WINDOW

The electric awning windows are connected directly on the batteries 24 V DC terminal block. As a result, they can be operated regardless of the state open or close of the master switch. However, the circuit is protected with fuse F41 (10A) located in the front service compartment.

14.1 OPERATION

Opening sequence: switch SW1B or SW2B is closed. Window latch solenoid SOL1-A and SOL1-B are turned on along with M1 window motor. Once the latch is open, proximity switch PROX1 is de-activated, turning sol1-A and SOL1-B off.

Closing sequence: switch SW1A or SW2A is closed, turning on relay R1which turns on M1 in reverse polarity, closing the window. Once the window is closed, PROX1 is activated, turning on sol1-A and SOL1-B in reverse polarity latching the window closed.

14.2 WINDOW REMOVAL

Replacement awning window does not include a new motor. If in working order, transfer the motor of the replaced window to the replacement window. If not, the motor can be bought separately. When replacing the window, keep the components in working order as spare parts.

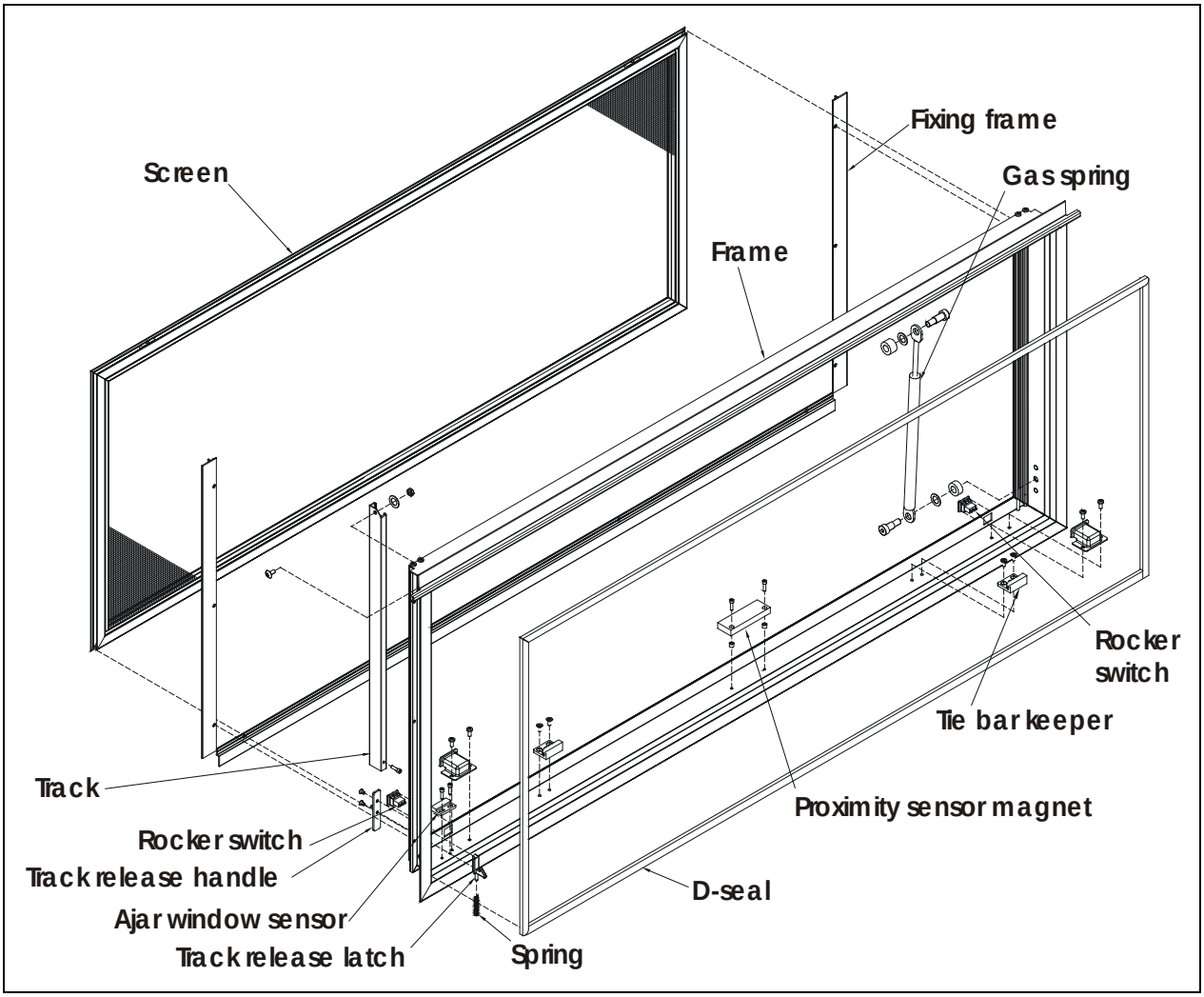

FIGURE 39: ELECTRIC AWNING WINDOW EXPLODED VIEW (FRAME) 18586

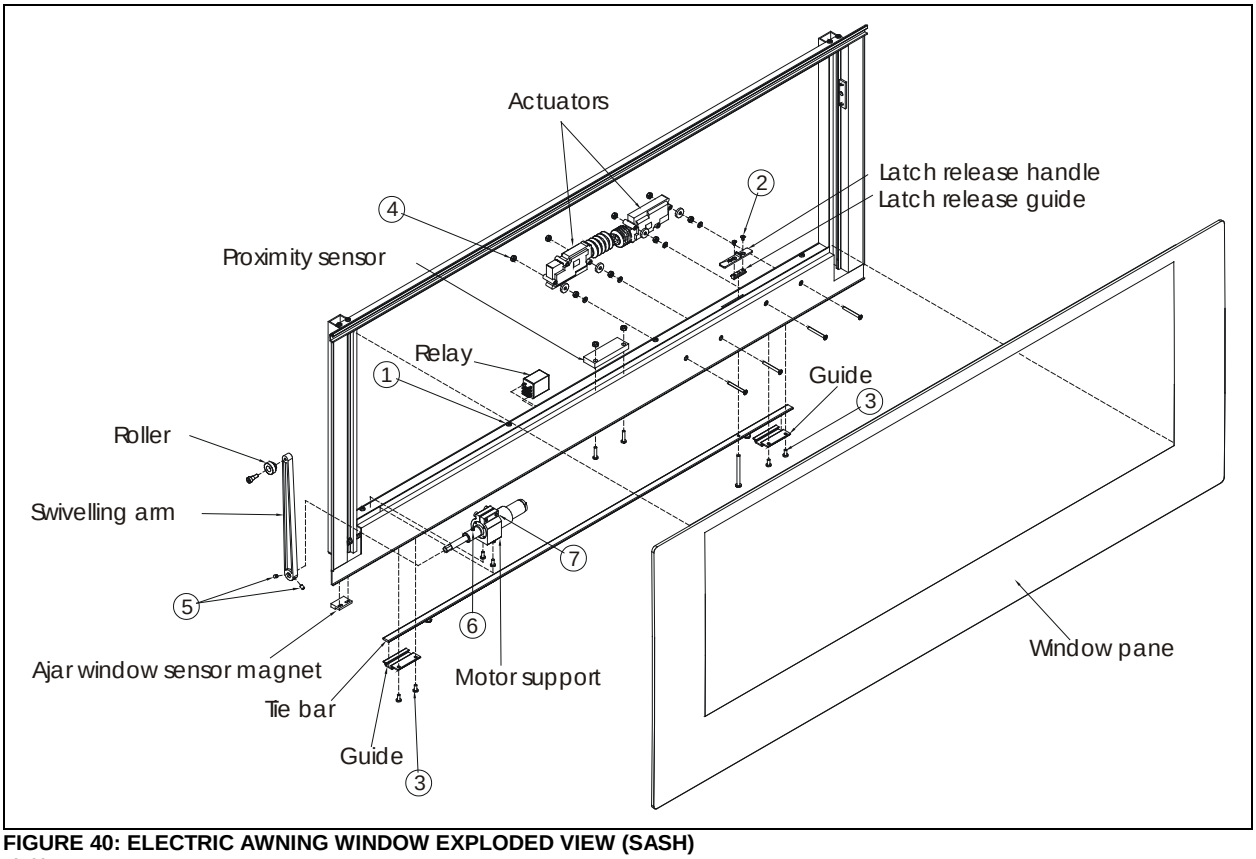

FIGURE 40: ELECTRIC AWNING WINDOW EXPLODED VIEW (SASH)
18583

1. Open the window and push downwards on the track release handle to release the track from the window frame.
2. Take out the screw at the lower end of the track to let free the swiveling arm roller.
3. Unplug connector C1 in the upper right corner. Dismount the gas spring from the window.
4. Loosen the set screws #5 (figure 39)(rotate the arm to get to the second set screw) and disengage the swiveling arm from the motor shaft extension.
5. Push the glass window out ninety degrees (90°).

⚠ CAUTION ⚠

The window may fall out.

6. The window is free and can be unhooked.
7. Reverse procedure to install a new one.

14.3 ACTUATOR REPLACEMENT

1. Unlatch the window using the manual latch release handle and open the window by pushing downwards on the track release handle.
2. Remove actuator access cover by taking out screws #1 (8x).
3. Take out screws #2 (2x) and remove latch release handle and guide.
4. Take out the guide screws #3 (4x) and remove tie bar.
5. Unplug connector C3 or C4 from problem actuator, unscrew nuts #4 (2x) and remove the actuator.
6. Reverse operations for reinstallation.

14.4 MOTOR REPLACEMENT

1. Open the window and push downwards on the track release handle to release the track from the window frame.
2. Take out the screw at the lower end of the track to let free the swiveling arm roller.
3. Remove actuator access cover by taking out screws #1 (8x).
4. Loosen the set screws #5 (rotate the arm to get to the second set screw) and disengage the swiveling arm from the motor shaft extension.

5. Unplug motor connector C2 and dismount motor and support assembly.
6. The shaft extension is glued to the motor shaft. It has to be heated to break the binding to permit removal. Loosen set screw #6 and remove the shaft extension. Also loosen screw #7 and remove motor from the support.
7. Reverse operations for reinstallation.

ELECTRIC AWNING WINDOW – CONVERTER CHECKLIST	
Check the electrical circuit & proximity sensor	A: The latching system will not operate without power. Is there electrical power to the latching circuit? The manual latch release handle, on the sill sash will be seen to move if there is power on this circuit, or it can be checked with an electrical tester. If there is no power to this circuit when the window is closed and either rocker switch are switched "ON", there is a problem with the electrical system. B: The Proximity Sensor on the sash may not be switching power to the latching circuit if the magnet is not getting close enough to the switch OR the Proximity Sensor may be broken (or stuck in one position). Is the proximity sensor switching when the window is closed?
Check the release force required to operate the manual latch release handle	A: If the pull force required to move the latch release is more than 20lbs the window will not latch properly. Average pull force during testing by manufacturer is 12lbs -15lbs. What is the force required to release the handle? Check using a force gauge (same test done by manufacturer).
Check Installation	A: If the window is too tightly installed OR if the sequence for tightening the clamping frame screws Is incorrect the window may not close properly. Was the window installed correctly? Was the correct sequence (see below) used when tightening the clamping frame screws? 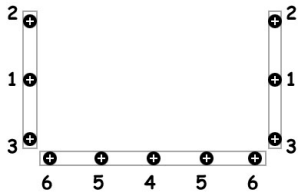 B: Removing the shipping blocks before the window is installed can create major problems. Were the shipping blocks in place during installation? C: Failure to remove the shipping blocks after installation can create interference between sash and frame. Have the shipping blocks been removed after installation? D: The window is misaligned or not installed squarely. Is there interference with any coach parts? Is there proper clearance between the bottom of the outer glass and the belt-line trim / seal?

Check for missing parts or misaligned parts	A: The frame and sash are misaligned. Is there any interference between the sash and frame? Is there clearance between the sash and the rocker switch covers? B: Tie-bar guides are missing. Check that the tie-bar guides are installed. There should be 4 installed on H windows, and 3 installed on XL2 windows.

15. BODY PANELS AND DOORS

Each of the doors should be checked for proper operation. This includes latching. Also, inspect each of the doors for damage, missing, or loose parts. Repair or replace those parts as needed. Unless otherwise noted, body panels and doors should be aligned and centered with surrounding panels. In general, a gap of ¼ inch (6 mm) is desirable between panels.

16. BAGGAGE COMPARTMENT DOORS

The baggage compartment doors on the vehicle are of identical design. The doors are pantograph, vertical-lift type and are fully sealed. Each door has a flush-mounted latch handle. To open, lift latch handle, then pull door outward and up. The door is held open by 2 gas-charged cylinders. To close, leave latch handle in the open position, pull downward on door and push down on latch to secure door. The door lower arm is spring loaded to secure effort required to close the door (Fig. 41).

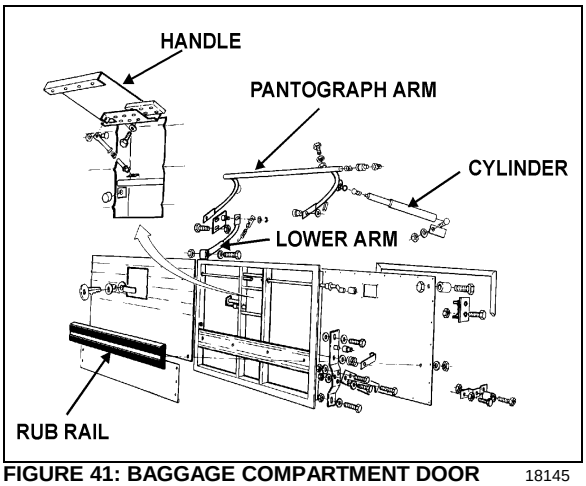

FIGURE 41: BAGGAGE COMPARTMENT DOOR 18145

If a door does not remain in the fully open position, one or both cylinders on that door is (are) defective. To test the cylinders, first support the door in the open position with proper equipment. Disconnect the rod end of one cylinder and retract the rod. If strong resistance is felt, the cylinder is in good condition and can be reinstalled. If the rod retracts with little effort, the cylinder is defective and should be replaced at once. Use the same procedure to test the other cylinder on that door.

16.1 DOOR REMOVAL

⚠ CAUTION ⚠

Two people are required to remove the baggage compartment doors.

1. Maintain the door halfway open by placing a wooden block between one of the pantograph arms and the upper frame.
2. Remove cap screw, lock washer and flat washer retaining lower arm to door
3. Remove spring pins and lock washers fastening the pantograph arms to the door.

⚠ WARNING ⚠

Support the door properly to prevent it from falling.

4. Spread the pantograph arms away from the door and remove door.
5. Inspect all pivot points and bushings for wear and damage. Check tension of gas-charged cylinders and replace if necessary.

16.2 PANTOGRAPH ARMS REMOVAL AND INSTALLATION

1. Disconnect rod end of gas-charged cylinders from the pantograph arms.
2. Loosen jam nut and cap screw locking the horizontal member of the pantograph to the pivot pin.
3. Slide pantograph assembly to the right and remove assembly from the vehicle.
4. To install, perform the removal instructions in reverse.

16.3 DOOR INSTALLATION

1. Use a wooden block to support the pantograph arms horizontally.

2. Support the door and insert each pantograph arm into the pivot pins on the side of the door.
3. Install washer and spring pin to fasten each arm to its pivot pin.
4. Fasten lower arm to the door with flat washer, lock washer and cap screw.
5. Remove wooden block and close baggage compartment door.

Door should be adjusted to leave a gap of 3/16" (5 cm) above the top edge of the door. To adjust, loosen the bolts retaining lock plate support and position the door correctly. Tighten the bolts after the adjustment.
If the baggage door locks too tightly or too loosely, the position of the catch striker is misadjusted. To adjust, loosen the catch striker retaining bolts, position the striker correctly and tighten the retaining bolts.
If the lower part of the baggage door does not close evenly with the side of the vehicle, adjust the lock plates by loosening their retaining bolts and positioning the locking plates correctly (Fig. 42).

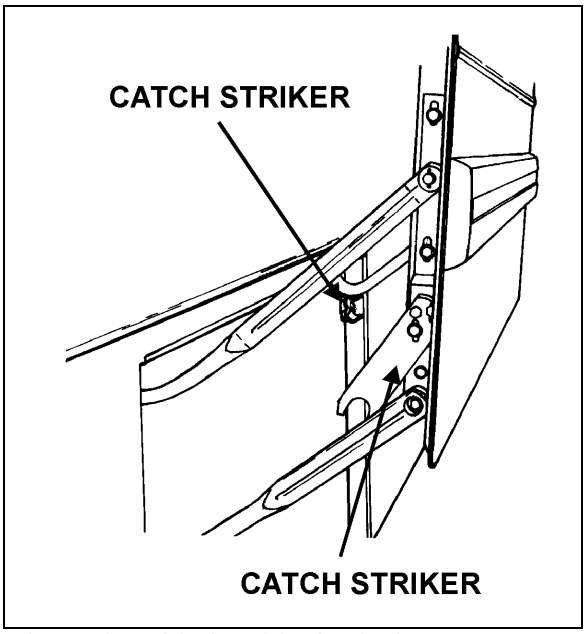

FIGURE 42: BAGGAGE DOOR CATCH STRIKER 18146

17. ENGINE COMPARTMENT DOORS

Engine compartment doors may be adjusted for proper fit by untightening hinge bolts:

1. Loosen the bolts, (1, 2 Fig. 43) holding the hinge to the vehicle structure to shift the door "UP or DOWN".
2. Loosening the bolts (3, Fig. 43) allows the door to be shifted "LEFT or RIGHT" and "IN or OUT".
3. Adjust the doors position depending on the gap needed between exterior finishing panels.
4. Tighten the bolts.
5. Check that the doors swing freely and close properly. It may be necessary to adjust the door latch to get proper fit and operation.

To adjust the latch mechanism (4, Fig. 43) and the striker pin:

1. Open the doors to access the striker pin.
2. Slightly loosen the striker pin.
3. Using a hammer, adjust the striker pin to center it in the door latch mechanism.
4. Tighten the striker pin.
5. Check doors fit and operation.

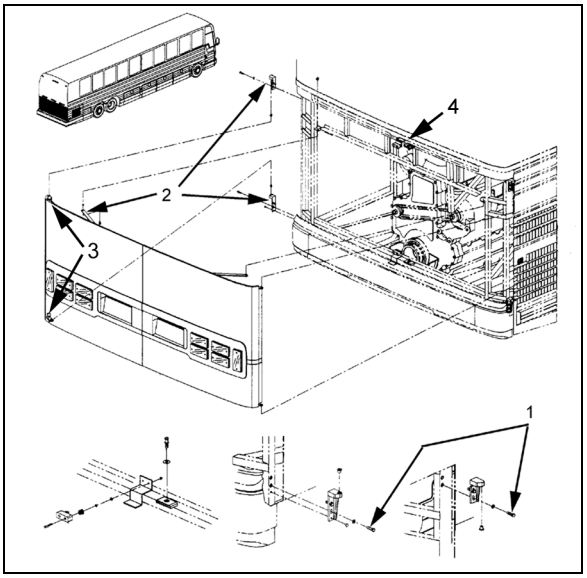

FIGURE 43: ENGINE COMPARTMENT DOORS

18. RADIATOR DOOR ADJUSTMENT

Radiator door may be adjusted for proper fit by untightening hinge bolts:

1. Loosen the bolts, (1, Fig. 44) holding the hinge to the vehicle structure to shift the door "IN or OUT" and "UP or DOWN".

2. Loosening the bolts (2, Fig. 44) allows the door to be shifted "LEFT or RIGHT" and "UP or DOWN".
3. Adjust the door position depending on the gap needed between exterior finishing panels.
4. Tighten the bolts.
5. Check that the door swings freely and closes properly. It may be necessary to adjust the door latch to get proper fit and operation.

To adjust the latch mechanism (3, Fig. 44) and the striker pin:

1. Open the door to access the striker pin.
2. Slightly loosen the striker pin.
3. Using a hammer, adjust the striker pin to center it in the door latch mechanism.
4. Tighten the striker pin.
5. Check door fit and operation.

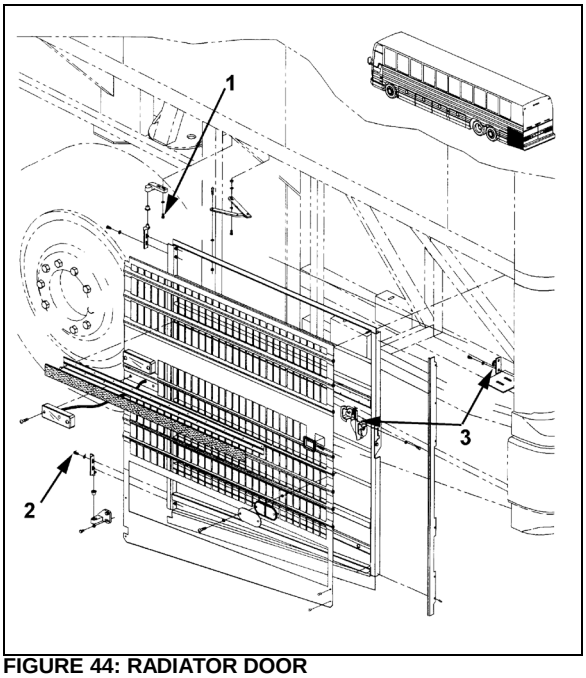

FIGURE 44: RADIATOR DOOR

19. ENGINE COMPARTMENT R. H. SIDE DOOR

Engine compartment R. H. side door may be adjusted for proper fit by untightening hinge bolts:

1. Loosen the bolts, (1, Fig. 45) holding the hinge to the vehicle structure to shift the door "IN or OUT" and "UP or DOWN".
2. Loosening the bolts (2, Fig. 45) allows the door to be shifted "LEFT or RIGHT" and "UP or DOWN".
3. Adjust the door position depending on the gap needed between exterior finishing panels.
4. Tighten the bolts.
5. Check that the door swings freely and closes properly. It may be necessary to adjust the door latch to get proper fit and operation.

To adjust the latch mechanism (3, Fig. 45) and the striker pin:

1. Open the door to access the striker pin.
2. Slightly loosen the striker pin.
3. Using a hammer, adjust the striker pin to center it in the door latch mechanism.
4. Tighten the striker pin.
5. Check door fit and operation.

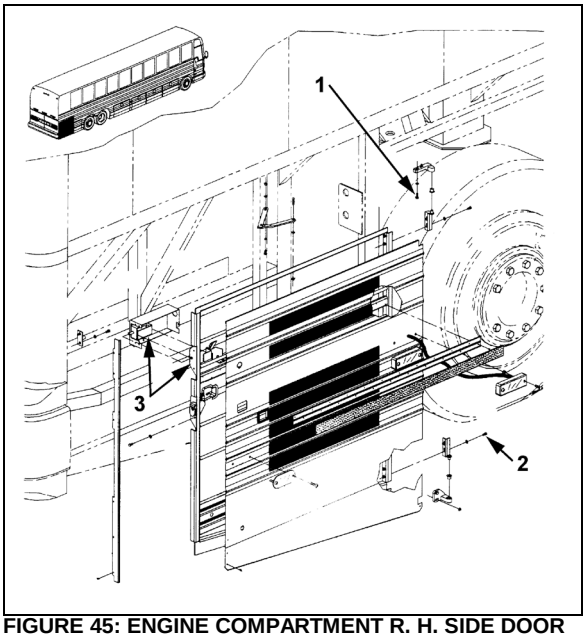

FIGURE 45: ENGINE COMPARTMENT R. H. SIDE DOOR

20. CONDENSER DOOR ADJUSTMENT

1. Open the condenser door.
2. Loosen the screws fixing the hinge to hinge attachment or hinge to door assembly. Loosening the screws allows the condenser door assembly to be shifted "LEFT or RIGHT" and "UP or DOWN" or “IN and OUT”.
3. Adjust condenser door assembly position at the hinge.
4. Tighten the screws.

5. Respect the required gap between exterior finishing panels.
6. Check that the door swings freely and closes properly. It may be necessary to adjust the door latch to get proper fit and operation.

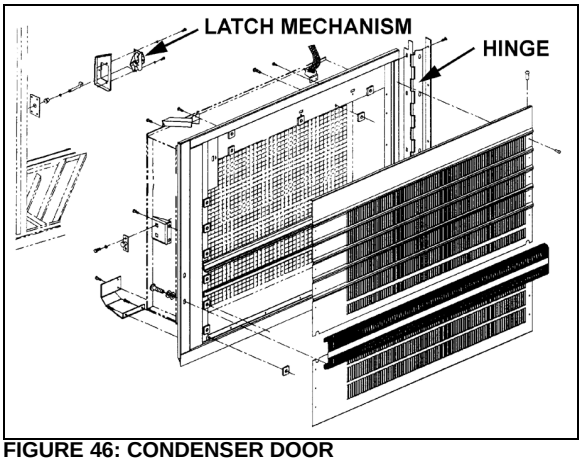

FIGURE 46: CONDENSER DOOR

21. EVAPORATOR DOOR ADJUSTMENT

1. Open the evaporator door.
2. Loosen the screws fixing the hinge to hinge attachment or hinge to door assembly. Loosening the screws allows the evaporator door assembly to be shifted "LEFT or RIGHT" and "UP or DOWN" or “IN and OUT”.
3. Adjust evaporator door assembly position at the hinge.
4. Tighten the screws.
5. Respect the required gap between exterior finishing panels.
6. Check that the door swings freely and closes properly. It may be necessary to adjust the door latch to get proper fit and operation.

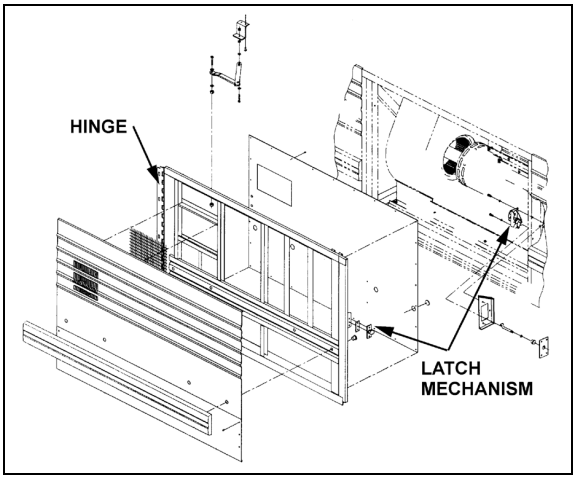

FIGURE 47: EVAPORATOR DOOR

22. FUEL FILLER DOOR

1. Open the fuel filler door.
2. Loosen the screws holding the panel to hinge assembly.
3. Adjust the fuel filler door position according to distance required between exterior finishing parts.
4. Tighten the nuts.
5. Check that the door swings freely and closes properly.

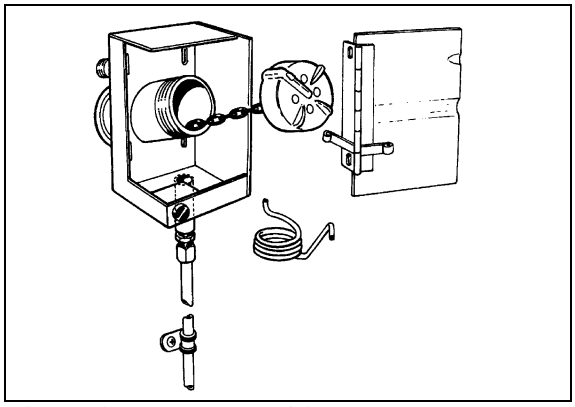

FIGURE 48: FUEL FILLER DOOR

23. FRONT SERVICE COMPARTMENT DOOR

For adjustment of the front service compartment door, refer to paragraph 7 in this section.

24. L.H. SIDE REAR SERVICE COMPARTMENT DOOR

1. Open the L. H. side rear service compartment door.
2. Loosen the screws fixing the hinge to hinge attachment or hinge to door assembly. Loosening the screws allows the L. H. side rear service compartment door assembly to be shifted "LEFT or RIGHT" and "UP or DOWN" or “IN and OUT”.
3. Adjust L. H. side rear service compartment door assembly position at the hinge.
4. Tighten the screws.
5. Respect the required gap between exterior finishing panels.

6. Check that the door swings freely and closes properly. It may be necessary to adjust the door latch to get proper fit and operation.

To adjust the latch mechanism and the striker pin:

1. Open the door to access the striker pin.
2. Loosen slightly the striker pin.
3. Using a hammer, adjust the striker pin to center it in the door latch mechanism.
4. Tighten the striker pin.

Check door fit and operation.

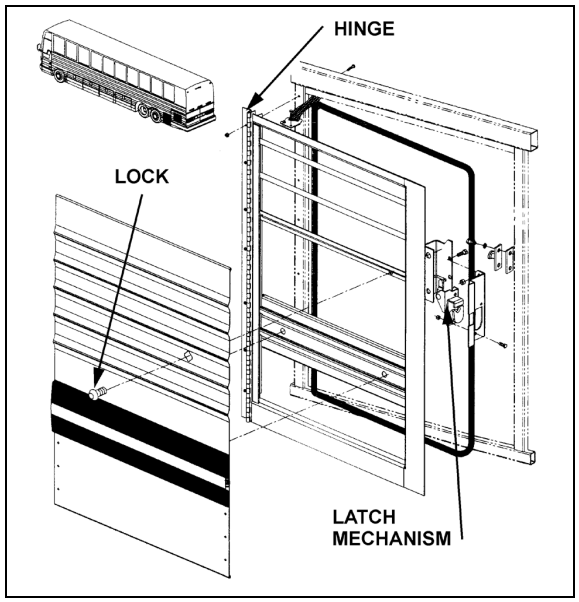

FIGURE 49: L.H. SIDE REAR SERVICE COMPARTMENT DOOR

25. R.H. SIDE REAR SERVICE COMPARTMENT OR MAIN POWER COMPARTMENT DOOR

To adjust the R. H. side rear service compartment (MTH) or main power compartment (Coaches) door:

1. Open the compartment door.
2. Loosen the screws fixing the hinge to hinge attachment or hinge to door assembly. Loosening the screws allows the compartment door assembly to be shifted "LEFT or RIGHT" and "UP or DOWN" or “IN and OUT”.
3. Adjust compartment door assembly position at the hinge.
4. Tighten the screws.
5. Respect the required gap between exterior finishing panels.
6. Check that the door swings freely and closes properly. It may be necessary to adjust the door latch to get proper fit and operation.

To adjust the latch mechanism and the striker pin:

1. Open the door to access the striker pin.
2. Loosen slightly the striker pin.
3. Using a hammer, adjust the striker pin to center it in the door latch mechanism.
4. Tighten the striker pin.

Check door fit and operation.

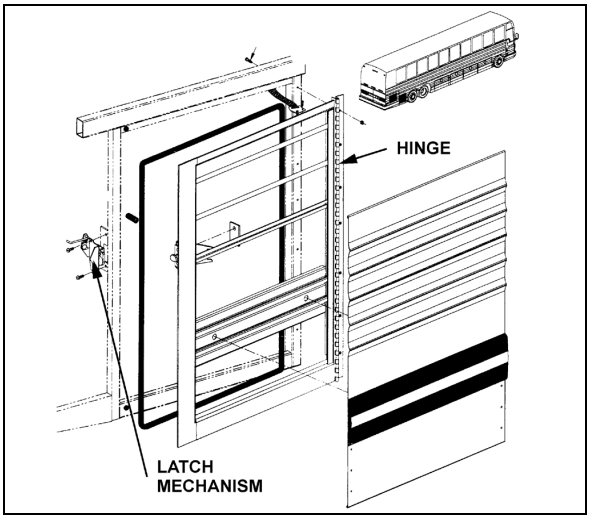

FIGURE 50: R.H. SIDE REAR SERVICE COMPARTMENT OR MAIN POWER COMPARTMENT DOOR

26. FENDERS

On the "XL2" series vehicle, rear fenders are hinged for maintenance on brakes and suspension. Each rear fender panel has two mechanical spring loaded holding devices fixing it to the vehicle’s structure. Push the spring type rod sideways to disengage the lock.
Front rubber fender may be removed using the following procedure:
Remove the nuts on the inside of the fender. Remove the fender from the vehicle. To reinstall, reverse the procedure.

27. REAR CAP

The fiberglass rear cap does not need any maintenance except painting as needed. It is held in place with adhesive. If ever it has to be replaced, make an appointment at a Prévost

service center near you. For minor damages, refer to section 4 "Fiberglass Repair" and section 5 "Painting".

28. FRONT CAP

The fiberglass front cap does not need any maintenance except painting as needed. It is held in place with adhesive. If ever it has to be replaced, make an appointment at a Prévost service center near you. For minor damages, refer to section 4 "Fiberglass Repair" and section 5 "Painting".

29. XL2 SMOOTH SIDE PANEL REPLACEMENT PROCEDURE

Material:

Anti-silicone (682989)	√	Scotchbrite gray (680226)	√	Sika 221 gray	√
CHIX cloth (682384)	√	Sika 205 1liter (683097)	√	Sika 252 black	√
Blue cloth (682383)	√				

Equipment:

Glue gun	√	
Pencil	√	

SECTION 1 SMOOTH SIDE PANEL REMOVAL			
1.00	**REMOVAL**		
	A)	Remove finishing molding. Insert a screwdriver into snap-on finishing molding joint. Bend finishing molding enough to be able to fix a pair of locking pliers. Using the pair of locking pliers, pull the stainless steel molding and at the same time gradually cut Sika bead with a sharp knife.	Be careful not to damage the adjacent surfaces.
	B)	Using a hammer and punch, drive out rivet shanks from top and bottom and from front and rear finishing molding supports. Use a #11 titanium drill bit to remove rivet heads.	
	C)	Grind tig weld spots at each end of side panel.	
	D)	Safely support or temporary fix side panel.	**Warning: Panel weights over 200 pounds**
	E)	Insert a flat screwdriver between the side panel and the vehicle chassis, in the top left and right corners. Make sure to separate side panel from structure.	Be careful not to damage the adjacent surfaces.
	F)	Use the c-clamp to separate the side panel from the back structural panel and at the same time gradually cut Sika bead with a sharp knife.	Ideally, the hoist or chain block must be fastened to the floor while pulling from a 45° angle so as not to damage the vehicle structure
	G)	Remove as much glue as possible from the structure using a putty knife or pneumatic knife without damaging 206 G+P primer.	Never heat SikaFlex adhesive to remove.
	H)	Check panel horizontal supports for straightness using a straight edge. Take measurements with a ruler.	Tolerance : 1mm towards the outside and 1.5mm towards the inside.

SECTION 2 PREPARATION OF SURFACES			
2.00	**VEHICLE SURFACE PREPARATION**		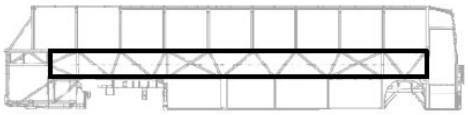
	A)	Clean using "anti-silicone" until all clothes come clean. See PR000001 section A.	
	B)	Use the belt sander (grit coarse) Use a new paper on each vehicle side.	
	C)	Clean using " anti-silicone " until all clothes come clean. See PR000001 section A.	
	D)	Apply – Sika 205 See PR000001 section B.	
2.05	**SIDE PANEL PREPARATION**		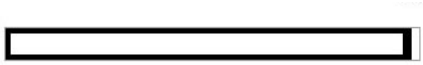
	A)	Clean using " anti-silicone " until all clothes come clean. See PR000001 section A.	
	B)	Use the belt sander (grit coarse) Use a new paper on each vehicle side panel.	
	C)	Clean using " anti-silicone " until all clothes come clean. See PR000001 section A.	
	D)	Apply – Sika 205 See PR000001 section B.	

PR000001 Section A Alcohol or Anti-silicone

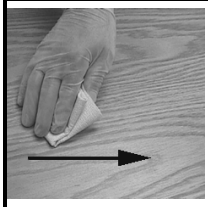

1. **Apply**

CHIX cloth

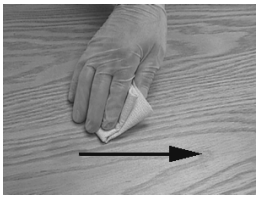

2. **Dry immediately**

Blue cloth

3. **Allow to dry**

Mandatory	**Minimum time : Wait for product to evaporate**
	After 2 hours: Start cleaning operation again
Before applying any other product	If surface seems dusty, greasy or with finger marks, start cleaning operation again.

Section B Sika 205

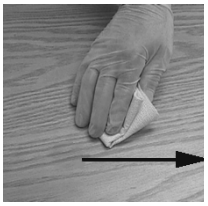

1. **Apply**

CHIX cloth

2. **Allow to dry**

Manda-tory	**Minimum time**	**- For a smooth surface (aluminum, stainless, steel, fiber glass (gelcoat side), etc.):**	**2 minutes**
		- Pour a porous surface (fiber glass (non gelcoat side), etc.)	**10 minutes**
	After 2 hours : Reactivate surface with Sika 205		
Before applying any other product	If surface seems dusty, greasy or with finger marks, start operation again.		

SECTION 3 SIDE PANEL INSTALLATION			
3.00	A)	Using a pencil, mark the double-face self adhesive tape position onto vehicle side.	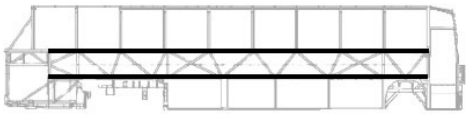
	B)	Apply double-face tape as per marking.	
	C)	Compress tape	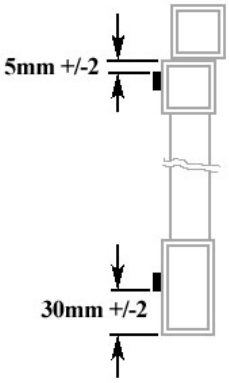
	D)	Remove protective film from double-face self adhesive tape center section.	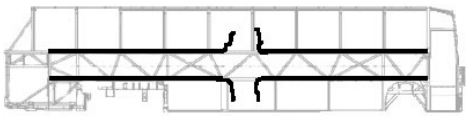

3.05		Install foam tape onto middle reinforcement then compress.	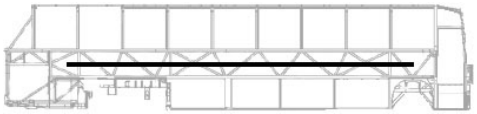
3.10		Apply Sika 252 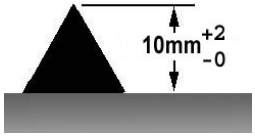 – Onto vehicle surface – Cut nozzle as per template – Use the guide for the application Bead must be continuous for the whole perimeter.	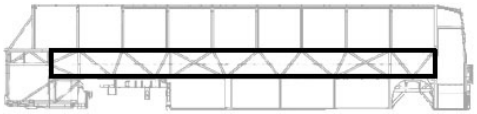 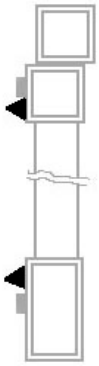
3.15	A)	Install side panel onto support jig.	
	B)	Position side panel in front of vehicle structure	
	C)	Perform final adjustment to make sure that side panel is true and square	– 30 mm. ± 2 with reference to bottom tubing – Side panel lined up with longitudinal "flat bar"
	D)	Sand rear of side panel 2" wide	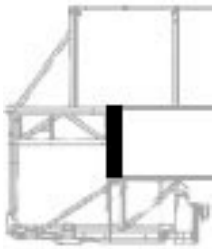
	E)	Perform tig spot welding	Quantity of "tig spot": 29 minimum.
3.20	A)	Install pulling equipment at the other end of side panel	
	B)	Make a final adjustment in height	

	C)	Sand front of side panel 2" wide	
	D)	Pull side panel so that panel moves 1/8"	Make sure the equipment pulls along the whole width of side panel
	E)	Perform tig spot welding	Quantity of "tig spot": 29 minimum.
3.30	Remove pulling equipment		
3.40	A)	Remove protective film from double-face self adhesive tape.	
	B)	Compress top and bottom section of side panel	
3.50	A)	Cut excess of side panel. Make sure that cut is parallel with tubing.	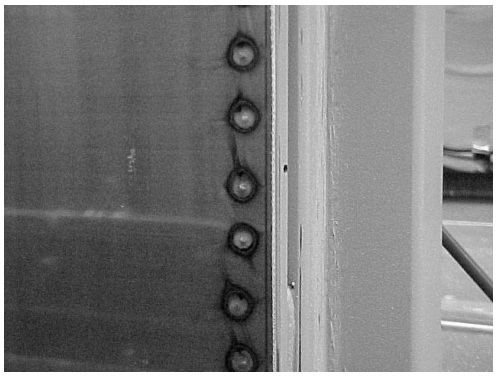
	B)	Grind side panel end to line up with door tubing.	
3.60	To seal each panel end, apply masking tape on each side of side panel joint. Use a caulking nozzle and grey Sikaflex 221 adhesive to fill the cavity between the panel and vehicle structure. Clean using Sika 205. Allow 5 minutes minimum for drying. Wear surgical gloves and smooth down the joint with your finger.		

SECTION 4 ENGINE AIR INTAKE PANEL INSTALLATION		
4.00	Make sure that sealing of structure has been performed properly	
4.05	Prepare vehicle surface as for side panel.	Refer to step # 2.00
4.10	Prepare air intake panel as for side panel	Refer to step # 2.05

4.15	Install foam tape 1/8" X ¼" onto structure, as shown in picture Coach 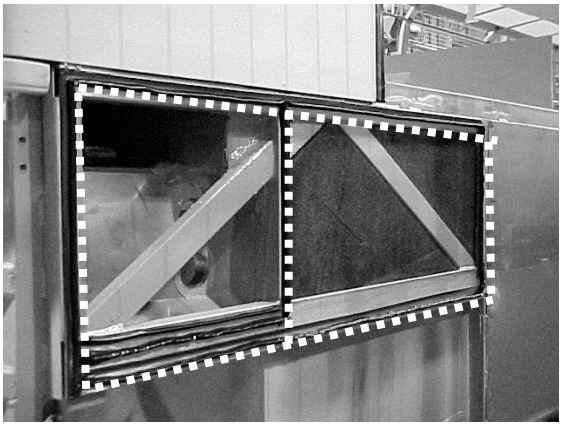	MTH 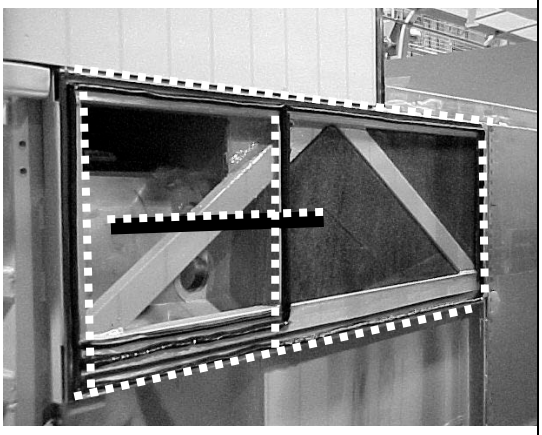
4.20	Install foam tape 1/16" X ¼ onto air intake panel top and bottom pleat	
4.25	Apply a bead of 252 onto structure as per picture Important: Make sure bead is continuous Triangular bead: 10mm x 8mm	

	Coach 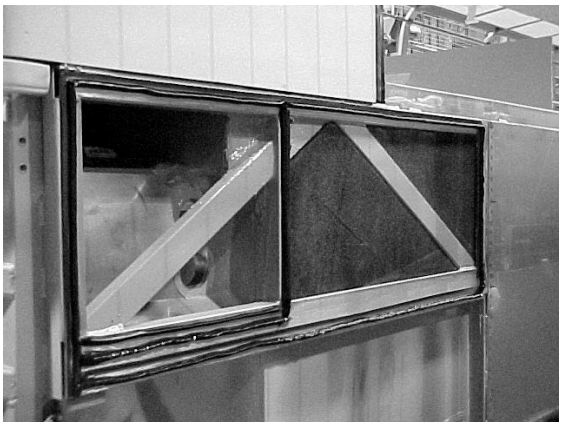	MTH 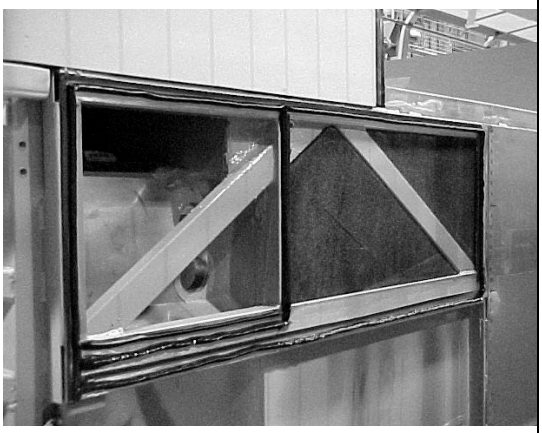
4.30	Install panel onto structure	Use a jig to make sure that panel is lined up with engine door tubing.
4.40	Use a brush to compress Sika bead	

5.00 *	**Finition Joint**		
	A)	Install a protective tape onto the tubing above welding	
	B)	Apply Sika 205 Use a plastic spatula inside a Chix cloth to ensure that Sika 205 reaches as far as the corner. See PR000001 section B.	
	C)	Apply Sika 252 black at the junction of both tubing. Smooth down the joint	
	D)	Remove protective tape	

30. REAR VIEW MIRRORS (RAMCO)

Your vehicle is equipped with two exterior mirrors.
The mirrors may be equipped with an optional electric heating system which serves to minimize ice and condensation on the mirror glass in extreme weather conditions. Integral thermostats are installed in both mirrors to avoid continuous heating. Use the appropriate switch on the dashboard to activate the defroster system on both mirrors simultaneously. The mirrors can easily be adjusted by using the remote controls located on the L.H. side control panel. The mirrors have easy to replace glass in case of breakage. Remote control motors can also be replaced.

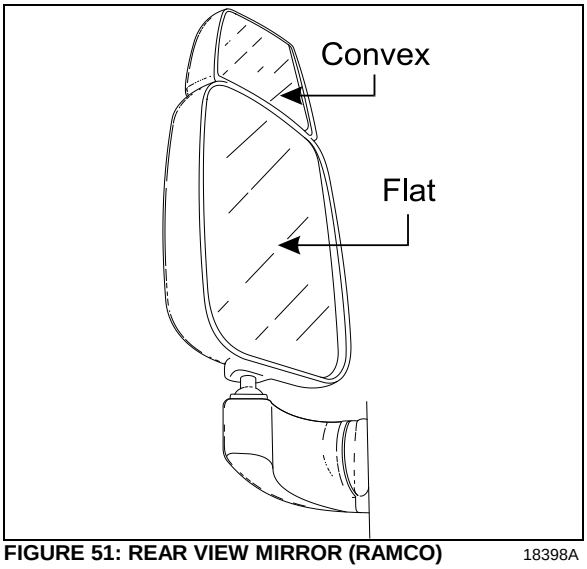

FIGURE 51: REAR VIEW MIRROR (RAMCO) 18398A

30.1 ADJUSTMENT

At the base of the mirror arm, loosen the mounting bolt to swing arm in or out.
To pivot the mirror head, loosen the setscrews on each side of the ball stub at the base of the mirror head to facilitate the adjustment.

30.2 DISASSEMBLY

At end of mirror arm, loosen the setscrews to relieve tension on the ball stem. Remove the ball stem from the arm.
Remove the four screws fastening the mirror arm base to the coach.

30.3 ASSEMBLY

Mount the mirror arm base to the coach. Insert the ball stem into the mirror arm and tighten the socket setscrews.

NOTE

Position the ball cup halves so the joint between them lies on the centerline of the arm. Ensure that the setscrews are not on the joint between the cup halves.

30.4 REPLACEMENT OF MIRROR GLASS

Remove the broken glass.
Position new glass in mirror head and press to lock the Velcro in place.

30.5 HEATED / REMOTE CONTROLLED REAR VIEW MIRRORS

Heated/remote controlled external rear view mirrors may be provided to prevent the mirrors from frosting up in cold weather.
The remote controlled external rear view mirrors attach to support arms using a pivot collar secured by setscrews. Loosening the setscrews allows the whole head assembly to turn on the support arm for initial adjustment. A mounting bolt and washer hold the arm support to the mounting bracket. The arm support can be moved to position the mirror head into or away from the coach body.
The mirror heat switch is located to the left of the driver on the dashboard. This switch must be activated before the mirror heating element will energize. Once energized, the mirror heating element is kept at a sustained temperature (between 60-80°F) by a thermostat. Refer to wiring diagram annexed in the technical publication box.

⚠ CAUTION ⚠

Do not attach stick-on type convex mirror accessories to the heated mirror glass. This could impede uniform heat distribution on the mirror surface which could break the mirror.

30.5.1 Mirror Control

The remote control pointer knob(s) for the mirrors is (are) mounted on the L.H. side control panel. The harness to the mirror head runs through the arm support. The remote motor is mounted to the mirror head behind the mirror glass.
Turn pointer knob to the left for mirror head adjustments and to the right for convex mirror adjustment, then push down on either of the button's (4) sides to adjust the selected mirror viewing angle.

30.5.2 Disassembly

At end of mirror arm, loosen the setscrews to relieve tension on the ball stud. Remove the ball stud. Remove the ball stud from the arm and gently pull the harness out until the connector is exposed.
Remove the four screws fastening the mirror arm base to the coach. Slide the harness free of the mirror arm base.

30.5.3 Assembly

Attach a stiff wire (snake) to the end of the harness and insert the wire through the mirror arm base and arm, gently pull the harness through the arm and disconnect the "snake".
Connect the mirror head harness. Insert the harness connector back into the mirror arm.
Insert the ball stud into the mirror arm and tighten the socket setscrews.

NOTE
Position the ball cup halves so the joint between them lies on the centerline of the arm. Ensure that the setscrews are not on the joint between the cup halves.

30.5.4 Convex & Flat Mirror Removal

The mirror glass assembly is mounted to the control mechanism or to mirror base with Velcro strips. Remove the mirror glass by gently pulling the lens to release the Velcro. Disconnect the heater grid at the two connectors.
Connect the connectors of the new mirror's grid to the harness. Install the lens by positioning the lens in the mirror frame and pressing to lock the Velcro in place.

31. VEHICLE JACKING POINTS

The vehicle can be lifted by applying pressure under body jacking points or front and drive axle jacking points. When it is necessary to lift the vehicle, care should be taken to ensure that the pressure is applied only on the specified areas. Equipment for lifting the front of the vehicle must have a combined lifting capacity of at least 20,000 lb. (9 100 kg). Equipment for lifting the rear of the vehicle must have a combined lifting capacity of at least 40,000 lb. (18 200 kg).

⚠ CAUTION ⚠
DO NOT tow or jack vehicle with people on board.

⚠ WARNING ⚠
When it is necessary to raise the vehicle, care should be taken to ensure that pressure is applied only at the points indicated in figures 52 to 58.

⚠ WARNING ⚠
Extra lift capacity may be required if luggage or any other type of load (e.g. conversion equipment) are onboard the vehicle.

⚠ CAUTION ⚠
The suspension of the vehicle must be in the normal ride position before jacking. The "Level Low" system on a motorcoach must be in the "DRIVE" position prior to turning the ignition key "OFF".

Twelve jacking points are located on the vehicle: three are located on each side of the frame and two are located under each axle. Refer to the following illustrations for the location of jacking points.

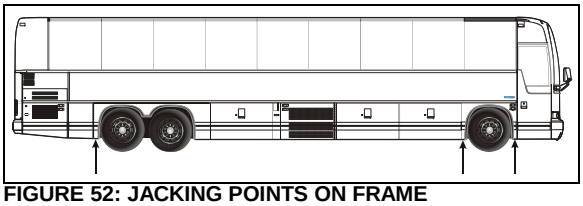

FIGURE 52: JACKING POINTS ON FRAME

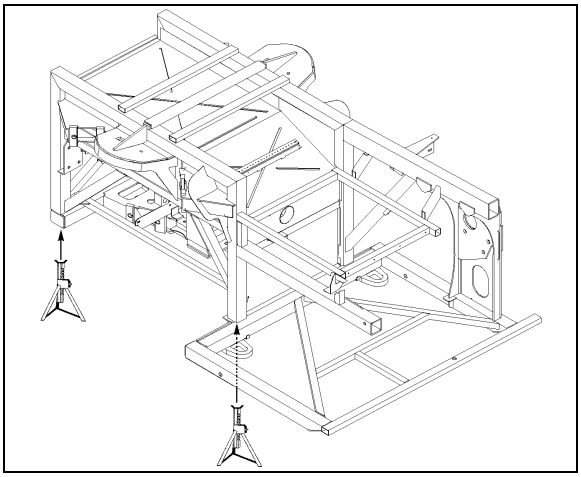

FIGURE 53: FRONT SUBFRAME JACKING POINTS 18592

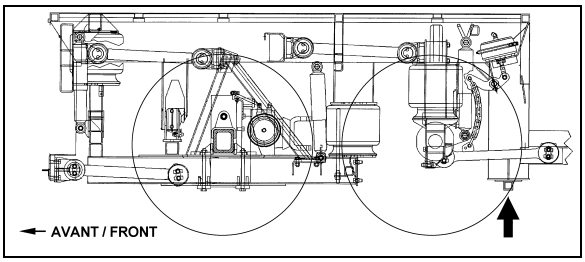

FIGURE 54: REAR SUBFRAME JACKING POINTS

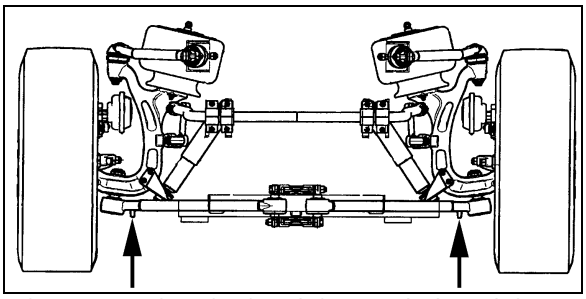

FIGURE 55: JACKING POINTS ON IND. SUSPENSION 16095

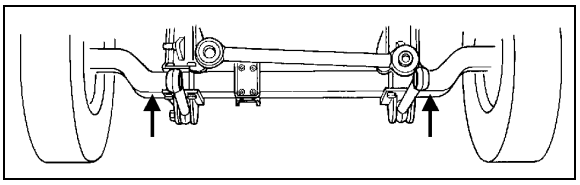

FIGURE 56: JACKING POINTS ON FRONT AXLE 18084

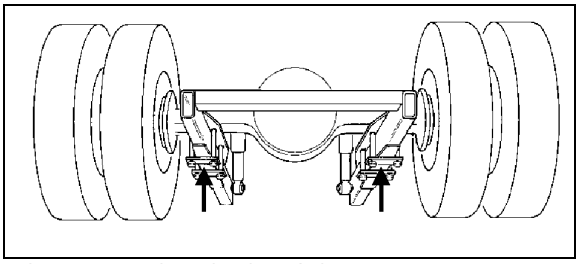

FIGURE 57: JACKING POINTS ON DRIVE AXLE OEH3B762

⚠ WARNING ⚠

Always unload or retract the tag axle before jacking the vehicle from the front and drive axle jacking points to prevent damage to suspension components.

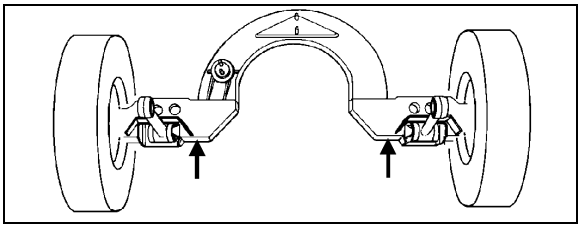

FIGURE 58: JACKING POINTS ON TAG AXLE OEH3B764

⚠ WARNING ⚠

The jacking points on the tag axle must be used for raising the tag axle only.

Several kinds of hydraulic jacks can be used. Only jack at the specified jacking points. Jack must support the following capacities:

Front axle: 20,000 lb. (9 100 kg);

Drive axle: 40,000 lb. (18 200 kg).

31.1 HYDRAULIC JACK

To raise: turn release valve clockwise. Insert handle in socket and raise by pumping.

To lower: remove handle and turn the release valve slowly counterclockwise.

Always keep ram and extension screw retracted when jack is not in use.

Service: Check oil level when jack fails to raise to full height. Lower ram completely with release valve open and jack in upright position, remove filler plug and refill to level of filler hole with hydraulic jack oil. Never use brake fluid.

⚠ WARNING ⚠

Jack is intended for lifting only. Do not get under the vehicle or load for any reason unless it is properly supported with safety stands and securely blocked.

⚠ WARNING ⚠

Do not overload jack above rated capacity. Prevent "side loading", make sure load is centered on ram. Do not push or tilt load off jack.

32. TOWING THE VEHICLE

The vehicle can be transported on a low bed semi-trailer of adequate gross axle weight capacity. When transporting a vehicle, apply parking brake and shut down the engine. Block all wheels and secure vehicle with tie-downs. Check that overall height will clear obstacles on the route to follow, and obtain required permits.
The vehicle can also be towed by lifting the front axle or by towing from the front with all wheels on the ground. These two methods are described below under their respective headings.
Whatever the method used, the vehicle should be towed by truck operators authorized and experienced in towing highway coaches.
Observe normal precautions including, but not limited to, the ones listed below when towing the vehicle:

- Make sure the parking brake is released before towing.
- Do not allow passengers to ride onboard the towed vehicle.
- Tow the vehicle at a safe speed as dictated by road and weather conditions.

- Accelerate and decelerate slowly and cautiously.

To prevent damage to the vehicle, use the two tow eyes located under the back bumper and/or fixed to the vehicle's frame between the front axle and the front bumper. Use only a solid link tow bar and a safety chain to tow the vehicle. If required, connect an auxiliary air supply to the vehicle so brakes can be operated while towing.

⚠ WARNING ⚠

During a towing operation, the driver should be alone inside the vehicle.

⚠ CAUTION ⚠

To prevent damage to the drive train components, disconnect axle shafts or driveshaft before towing. Do not attempt to push or pull-start a vehicle equipped with an automatic transmission.

NOTE

Make sure axle shafts or driveshaft are installed correctly after towing. Tighten axle shaft and driveshaft nuts to the correct torque settings. Do not invert shafts

32.1 LIFTING AND TOWING

The towed vehicle must be lifted from under the front axle only. The tow truck must be equipped with the proper lifting equipment to reach under the front axle since no other lifting points are recommended. Lifting and towing from any other point are unauthorized as it may cause serious damage to the structure. Do not unload or raise the tag axle when lifting and towing to prevent overloading the drive axle.

1. Remove both drive axle shafts to prevent damage to the transmission. Plug axle tube to prevent oil loss. Refer to Rockwell's *"Maintenance manual no.5"* annexed at the end of Section 11, Rear axle, in this manual for correct procedure.

⚠ CAUTION ⚠

Transmission lubrication is inadequate when towing. With automatic, semi-automatic or manual transmission, the drive axle shafts must be removed to avoid serious damage to the transmission.

2. Operate the engine when towing to maintain brake system air pressure. If the engine cannot be operated, connect an external air pressure line from the tow truck to the emergency fill valve in the engine compartment.
3. The emergency fill valve in the front service compartment does not supply air pressure to the brake system. The air pressure must be a minimum of 75 psi (520 kPa), and the line should be attached to the air line with a clip-on chuck.

⚠ CAUTION ⚠

Do not tow the vehicle without external air pressure applied to the emergency fill valve if the engine does not operate. Without brake system air pressure, the brakes may apply automatically if system air drops below 40 psi (275 kPa). If failure prevents releasing the parking brakes with air pressure, disengage the parking brakes mechanically.

4. Lift the vehicle from under the front axle, and adequately secure the underside to the tow vehicle lifting attachment with chains.
5. Observe safety precautions when towing.

32.2 TOWING WITHOUT LIFTING

⚠ CAUTION ⚠

When towing vehicle without lifting, use only a tow truck with a solid link tow bar and related equipment. All other means of towing are unauthorized. Tow only from the front of the vehicle.

1. Remove both drive axle shafts to prevent damage to the transmission. Plug axle tube to prevent oil loss. Refer to Rockwell's *"Maintenance manual no.5"* annexed at the end of Section 11, Rear axle, in this manual for correct procedure.

⚠ CAUTION ⚠

Transmission lubrication is inadequate when towing. With automatic, semi-automatic or manual transmission, the drive axle shafts must be removed to avoid serious damage to the transmission.

2. Operate the engine when towing to maintain brake system air pressure. If the engine

cannot be operated, connect an external air pressure line from the tow truck to the emergency fill valve in the engine compartment. The emergency fill valve in the front service compartment does not supply air pressure to the brake system. The air pressure must be a minimum of 75 psi (520 kPa), and the line should be attached to the air line with a clip-on chuck.

⚠ CAUTION ⚠

Do not tow the vehicle without external air pressure applied to the emergency fill valve if the engine does not operate. Without brake system air pressure, the brakes may apply automatically if system air drops below 40 psi (275 kPa). If failure prevents releasing the parking brakes with air pressure, disengage the parking brakes mechanically.

3. Position the tow truck so that the tow bar contacts the front bumper of the vehicle.
4. Attach the tow truck chains only in the tow eyes of the vehicle under the bumper and take up all the slack.
5. Attach safety chains as applicable.
6. Observe safety precautions when towing.

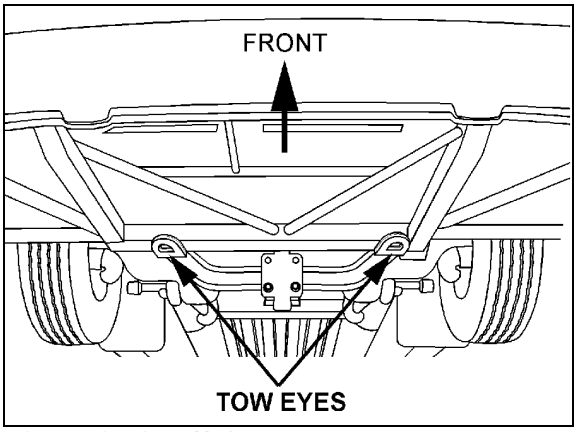

FIGURE 59: TOW EYES

33. SPECIFICATIONS

Door cylinder

Manufacturer	Bimba
Type	Pneumatic
I.D.	1½" (mm)
Stroke	8" (mm)
Prévost number	780595

Damper

Manufacturer	Koni
Prévost number	780565

Lock cylinder (upper)

Manufacturer	Bimba
Type	Air, single action, 1/8 NPT, hexagonal rod
I.D.	7/8" (22 mm)
Stroke	1" (25 mm)
Supplier number	D-51127-A
Prévost number	641392

Lock cylinder (central)

Manufacturer	Bimba
Type	Air, single action, ¼ NPT
I.D.	1¾" (45 mm)
Stroke	1" (25 mm)
Supplier number	241-P
Prévost number	641209

Manifold solenoid

Manufacturer	Norgren
Type	4 ports, 1/8 NPT
Voltage	24 VDC
Power consumption	6 watts
Maximum pressure	150 psi (1035 kPa)
Prévost number	641448

Solenoid valve (Latching valve)

Manufacturer	Humphrey
Model	310
Operating range	0 to 125 psi (0 to 860 kPa)
Voltage	24 VDC
Voltage tolerance	+10%, -15% of rated voltage
Power consumption	4 watts
Leak rate (max allowed)	0.245 in3/min @ 100 psi (4cc/min @ 690 kPa)
Type of operation	Direct solenoid
Lubrication	Not required (factory pre-lubed)
Filtration	40 micron recommended
Prévost number	641412

Pressure switch assembly

Prévost number	452831

SECTION 22: HEATING AND AIR CONDITIONING

CONTENTS

1. HEATING AND AIR CONDITIONING 22-5

2. AIR CIRCULATION 22-5

2.1 DRIVER'S AREA 22-5
2.2 CENTRAL AREA 22-6

3. DRIVER'S HVAC SYSTEM OPERATION 22-6

3.1 VEHICLES EQUIPPED WITH A TM-16HD SELTEC COMPRESSOR 22-6
3.2 VEHICLES EQUIPPED WITH A CENTRAL SYSTEM 22-6
3.3 DRIVER'S AREA AIR TEMPERATURE SENSOR RESISTANCE CHART 22-7

4. CENTRAL HVAC SYSTEM OPERATION 22-7

4.1 PARCEL RACK A/C (XL2 COACHES) 22-8

5. HVAC UNIT MAINTENANCE 22-8

5.1 COIL CLEANING 22-8
5.2 DRIVER'S HVAC UNIT AIR FILTER 22-9
5.3 MAIN HVAC UNIT AIR FILTER 22-9
5.4 PARCEL RACK FAN AIR FILTER 22-10

6. EVAPORATOR MOTOR 22-10

6.1 REMOVAL 22-10
6.2 INSTALLATION 22-10
6.3 CHECKING OPERATION OF BRUSH IN HOLDER 22-11
6.4 BRUSH WEAR INSPECTION AND REPLACEMENT 22-11
6.5 BRUSH HOLDER ADJUSTMENT 22-11
6.6 CHECKING COMMUTATOR 22-11

7. CENTRAL AIR CONDITIONING SYSTEM 22-11

7.1 A/C CYCLE 22-12
7.2 REFRIGERANT 22-12
7.2.1 Procurement 22-12
7.2.2 Precautions in Handling Refrigerant 22-12
7.2.3 Treatment in Case of Injury 22-13
7.2.4 Precautions in Handling Refrigerant Lines 22-16
7.2.5 Auxiliary System Refrigerant Lines 22-16
7.3 PUMPING DOWN 22-16
7.4 ADDING REFRIGERANT (VAPOR STATE) 22-17
7.5 EVACUATING SYSTEM 22-17
7.5.1 Double Sweep Evacuation Procedure 22-18
7.6 CHARGING SYSTEM 22-19
7.7 REFRIGERANT SYSTEM CLEAN-OUT AFTER COMPRESSOR FAILURE 22-19
7.7.1 Determining Severity of Failure 22-19
7.7.2 Clean-out after Minor Compressor Failure 22-20
7.7.3 Clean-out After Major Compressor Failure 22-20

8. CENTRAL A/C SYSTEM COMPONENTS 22-20

8.1 COMPRESSOR (CENTRAL SYSTEM) 22-20
8.1.1 Belt Replacement 22-20

8.1.2 Pulley Alignment 22-21
8.1.3 Longitudinal Compressor Alignment 22-21
8.1.4 Horizontal Compressor Alignment 22-21
8.1.5 Vertical Compressor Alignment 22-23
8.1.6 Compressor Maintenance 22-23
8.1.7 Troubleshooting Guide 22-23
8.2 MAGNETIC CLUTCH 22-24
8.3 CONDENSER 22-24
8.3.1 Condenser Fan Motors 22-24
8.3.2 Condenser Fan Motor Removal 22-24
8.3.3 Preliminary Disassembly 22-25
8.3.4 Disassembly 22-25
8.4 RECEIVER TANK 22-25
8.5 FILTER DRYER 22-25
8.5.1 Replacement 22-25
8.5.2 Moisture Indicator 22-26
8.6 LIQUID REFRIGERANT SOLENOID VALVE 22-26
8.6.1 Manual Bypass 22-26
8.6.2 Coil Replacement 22-27
8.6.3 Valve Disassembly 22-27
8.6.4 Valve Reassembly 22-27
8.7 EXPANSION VALVE 22-27
8.7.1 Central System 22-27
8.7.2 Driver's System 22-30
8.8 TORCH BRAZING 22-30
8.9 TROUBLESHOOTING 22-31
8.9.1 Expansion Valve 22-31
8.9.2 A/C 22-32
8.10 TEMPERATURES & PRESSURES 22-34
8.11 LEAK TESTING 22-35

9. AUXILIARY AIR CONDITIONING SYSTEM AND COMPONENTS 22-35

9.1 COMPRESSOR 22-35
9.2 MAGNETIC CLUTCH 22-35
9.3 MAINTENANCE PRECAUTIONS 22-36
9.3.1 Work Area 22-36
9.3.2 Refrigerant Handling 22-36
9.3.3 PAG Oil Handling 22-36
9.3.4 Refrigerant Recovery 22-36
9.3.5 Compressor Handling 22-37
9.4 COMPRESSOR REMOVAL 22-37
9.4.1 When the compressor is operational 22-37
9.4.2 When the compressor is inoperable 22-37
9.5 INSTALLATION PRECAUTIONS 22-37
9.6 COMPRESSOR OIL CHANGE 22-37
9.6.1 Evacuating System Before Adding Refrigerant (Driver's or Auxiliary System) 22-38
9.7 OIL ADDITION 22-38
9.8 COMPRESSOR OIL CONTAMINATION 22-39
9.9 OIL RETURN OPERATION 22-39
9.10 OIL CHECK INTERVAL 22-39
9.11 LEAK TEST PROCEDURE WITH COMPRESSOR REMOVED 22-39
9.12 TIGHTENING TORQUES 22-40

10. HEATING SYSTEM 22-40

10.1 DRAINING HEATING SYSTEM 22-43
10.1.1 Draining Driver's Heater Core 22-43
10.1.2 Draining Main Heater Core 22-43
10.2 FILLING HEATING SYSTEM 22-44
10.3 BLEEDING HEATING SYSTEM 22-44
10.4 SOLDERING 22-45
10.5 DRIVER'S WATER SOLENOID VALVE 22-45
10.5.1 Improper Operation 22-45
10.5.2 Coil Replacement 22-45
10.5.3 Valve Disassembly 22-45
10.5.4 Valve Reassembly 22-46
10.6 CENTRAL HOT WATER PNEUMATIC VALVE ASSEMBLY 22-48
10.6.1 Description 22-48
10.6.2 Pneumatic Water Valve Disassembly 22-48
10.6.3 Pneumatic Water Valve Reassembly 22-49
10.6.4 Pilot Solenoid Valve 22-49
10.6.5 Valve Troubleshooting 22-49
10.7 WATER RECIRCULATING PUMP 22-49
10.7.1 Converted Vehicles Equipped With Central A/C – System Description 22-49
10.7.2 Coaches Equipped With Central A/C or Driver's A/C – System Description 22-52
10.8 WATER FILTER 22-55
10.8.1 Description 22-55
10.8.2 Maintenance 22-55
10.8.3 Servicing (Vehicles with central A/C system) 22-55
10.8.4 Servicing (Vehicles with driver's A/C system) 22-56
10.9 BY-PASS SOLENOID WATER VALVE (OPTIONAL) 22-56
10.9.1 To Remove or Change the Coil 22-56
10.9.2 To Take the Valve Apart 22-57
10.10 PREHEATING SYSTEM (OPTIONAL ON COACHES ONLY) 22-57
10.10.1 Operation 22-58
10.10.2 Preheating System Timer 22-58
10.10.3 Timer Operating Instructions (Webasto) 22-59
10.10.4 Troubleshooting and Maintenance 22-61

11. SPECIFICATIONS 22-62

ILLUSTRATIONS

FIGURE 1: ADJUSTABLE AIR DUCT 22-5
FIGURE 2: DRIVER'S AIR CIRCULATION 22-5
FIGURE 3: CENTRAL HVAC SYSTEM AIR CIRCULATION 22-6
FIGURE 4: DRIVER'S HVAC SYSTEM CONTROL UNIT 22-6

FIGURE 5: CENTRAL HVAC SYSTEM CONTROL UNIT 22-7
FIGURE 6: THERMISTOR SENSOR 22-7
FIGURE 7: LOCATION OF OUTSIDE TEMPERATURE SENSOR 22-8
FIGURE 8: LOCATION OF A/C JUNCTION BOX IN EVAPORATOR COMPARTMENT 22-8
FIGURE 9: A/C JUNCTION BOX 22-8
FIGURE 10: EVAPORATOR COIL CLEANING 22-8
FIGURE 11: CONDENSER COIL CLEANING 22-9
FIGURE 12: DRIVER'S AREA AIR FILTERS 22-9
FIGURE 13: MAIN HVAC UNIT AIR FILTER 22-9
FIGURE 14: CABIN SYSTEM AIR FILTER REMOVAL 22-9
FIGURE 15: PARCEL RACK FAN AIR FILTER 22-10
FIGURE 16: HVAC COMPARTMENT 22-10
FIGURE 17: EVAPORATOR MOTOR ASSEMBLY 22-11
FIGURE 18: EVAPORATOR MOTOR 22-11
FIGURE 19: REFRIGERANT CIRCUIT (CENTRAL AND AUXILIARY SYSTEMS) 22-14
FIGURE 20: REFRIGERANT CIRCUIT (DRIVER'S AUXILIARY SYSTEM) 22-15
FIGURE 21: DOUBLE SWEEP EVACUATION SET-UP 22-18
FIGURE 22: AIR PRESSURE REGULATOR 22-21
FIGURE 23: BELT TENSIONER 22-21
FIGURE 24: COMPRESSOR ALIGNMENT 22-23
FIGURE 25: EXPLODED VIEW OF 05G COMPRESSOR 22-22
FIGURE 26: COMPRESSOR ALIGNMENT 22-23
FIGURE 27: CONDENSER FAN MOTOR 22-24
FIGURE 28: A/C CONDENSER COMPARTMENT 22-25
FIGURE 29: DRIVER'S EVAPORATOR LIQUID SOLENOID VALVE 22-26
FIGURE 30: REFRIGERANT SOLENOID VALVE 22-27
FIGURE 31: EXPANSION VALVE 22-28
FIGURE 32: SUPERHEAT ADJUSTMENT INSTALLATION 22-29
FIGURE 33: HIGH & LOW SWING TEMPERATURE AT REMOTE BULB 22-29
FIGURE 34: SELTEC TM-16HD COMPRESSOR 22-36
FIGURE 35: COMPRESSOR REMOVAL OR INSTALLATION 22-37
FIGURE 36: LOOSENING THE DISCHARGE SIDE CONNECTOR'S CAP 22-37
FIGURE 37: ROTATING MAGNETIC CLUTCH 22-37
FIGURE 38: COMPRESSOR OIL LABEL 22-38
FIGURE 39: DRAINING THE OIL 22-38
FIGURE 40: ADDING NEW COMPRESSOR OIL 22-38
FIGURE 41: ADDING OIL AFTER REPLACING A COMPONENT 22-39
FIGURE 42: DISCHARGE AND SUCTION CAPS 22-39
FIGURE 43: TIGHTENING TORQUES 22-40
FIGURE 44: CENTRAL HEATING SYSTEM COMPONENTS 22-41
FIGURE 45: DRIVER'S HEATING SYSTEM COMPONENTS (VEHICLES EQUIPPED WITH DRIVER'S SYSTEM ONLY) 22-42
FIGURE 46: CEILING OF THE SPARE WHEEL COMPARTMENT 22-43
FIGURE 47: DRIVER'S HVAC UNIT 22-43
FIGURE 48: HEATER LINE SHUTOFF VALVE 22-43
FIGURE 49: ENGINE COMPARTMENT 22-44
FIGURE 50: HEATER LINE SHUT-OFF VALVES 22-44
FIGURE 51: EVAPORATOR COMPARTMENT 22-44
FIGURE 52: DRIVER'S WATER SOLENOID VALVE 22-47
FIGURE 53: CENTRAL HOT WATER PNEUMATIC VALVE ASSEMBLY 22-48
FIGURE 54: PNEUMATIC WATER VALVE 22-48
FIGURE 55: PUMP LOCATION (SHELL) 22-49
FIGURE 56: WATER RECIRCULATING PUMP (CONVERTED VEHICLE - CENTRAL A/C) 22-51
FIGURE 57: PUMP LOCATION (CENTRAL A/C) 22-53
FIGURE 58: WATER RECIRCULATING PUMP (COACH - CENTRAL A/C OR DRIVER'S A/C) 22-54
FIGURE 59: WATER FILTER 22-56
FIGURE 60: L.H. SIDE REAR SERVICE COMPART. 22-57
FIGURE 61: WEBASTO PREHEATER (104,000 BTU) 22-57
FIGURE 62: WEBASTO 22-59

1. HEATING AND AIR CONDITIONING

The coach's interior is pressurized by its Heating, Ventilation, Air Conditioning (HVAC) units. Air flow and controls divide the vehicle in two sections: driver's and Central (passenger) sections. Vehicles equipped with a Central System are provided with a special air duct which allows a variable percentage of outside fresh air to be drawn into the vehicle and then mixed with recirculated air.

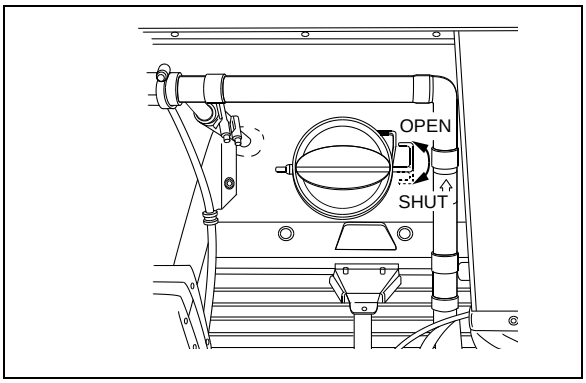

FIGURE 1: ADJUSTABLE AIR DUCT 22175

The adjustable air intake damper is located in the evaporator compartment (see *"18. BODY"* for compartment location). The damper should normally be left open. However, under extreme temperature conditions, it can be closed to block the addition of ambient air and heat or cool the air inside vehicle as desired. As soon as extreme heating or cooling is no longer required, the damper should be reopened. The interior of vehicle should always be slightly pressurized to prevent dust and moisture from entering vehicle. The HVAC systems have been designed to allow circulation of some outside fresh air, so windows should be kept closed at all times. In the event of ventilation failure, emergency escape hatch(es) (see *"18. BODY"*) can be used to provide air circulation, by simply pushing hatch upwards.

NOTE
Auxiliary A/C system (if so equipped) operates independently from main system, it has its own condenser, evaporator and compressor.

NOTE
Driver's HVAC system operates independently from main system, even though it uses the same compressor.

NOTE
Vehicles equipped with a TM-16HD Seltec compressor (driver's or auxiliary A/C) have a time delay relay installed on the electrical circuit with a reaction time of 48 seconds before magnetic clutch is engaged.

2. AIR CIRCULATION

2.1 DRIVER'S AREA

Fresh air is taken from a plenum behind the front bumper and enters the mixing box through an adjustable damper. Returning air is taken through a front dash panel into the mixing box. The "Driver A/C-Heating Recirc.-Fresh Air" control is located on the R.H. dashboard control panel. Mixed air goes through cooling and heating coils, fans and discharge ducts.

Both right and left discharge ducts defrost one half of the windshield. The driver can also, with the "Main Windshield Defroster" control divert some air flow to the console, from which he can direct air to his knees and/or upper body with adjustable HVAC vents and to his feet with the appropriate button (see operator's manual).

Two additional air outlets are installed on vehicles equipped with the Central HVAC ducting system. One is located in the stepwell for snow melting. The other air outlet is located behind the driver, on his L.H. side. This air outlet can be rotated to direct Air flow.

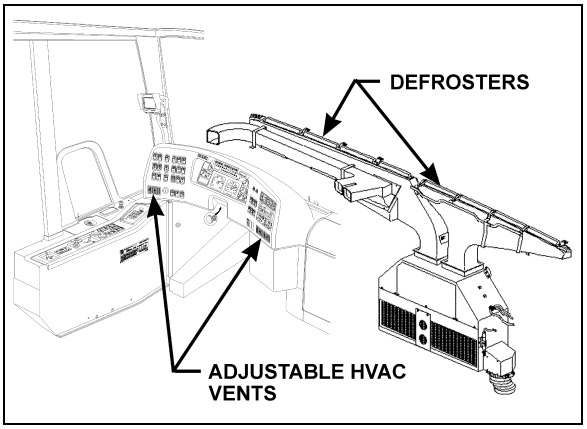

FIGURE 2: DRIVER'S AIR CIRCULATION 22171

2.2 CENTRAL AREA

(Passenger/Cabin)

Fresh air enters the vehicle on the L.H. side, through the manually adjustable damper (Fig. 1) located in evaporator compartment. The damper can be fully opened for normal operation or closed for extreme weather or highly polluted areas (Refer to the XL2 Operator's Manual for more details). Return air is drawn from inside the vehicle through the register duct (Fig. 3).

A double blower fan unit, which is activated by the evaporator motor, draws mixed air through an air filter, cooling and heating coils, then forces this air in the ventilation ducts along the walls, and finally exhausts it just below side windows.

XL2 coaches are also equipped with a parcel rack ventilation system, a three-position rocker switch 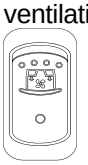 (0FF - 1st speed - 2nd speed) located on R.H. dashboard panel controls the speed of both fans. Return air is drawn just below the middle side windows through an air filter into the parcel rack fan; discharge air is fed to the rotating registers through the ventilation duct.

The parcel rack registers are used to control air flow for the passenger seats. One register per seat direct air flow by pointing or rotating register. Open or close register to adjust air flow.

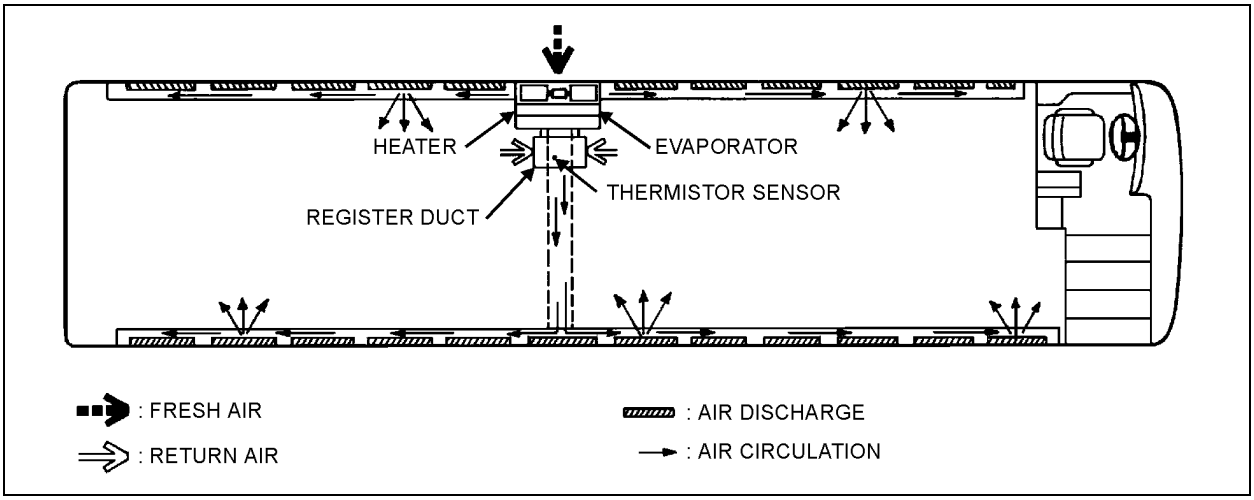

FIGURE 3: CENTRAL HVAC SYSTEM AIR CIRCULATION 22063

3. DRIVER'S HVAC SYSTEM OPERATION

The temperature control in the driver's area is provided directly by the HVAC control unit mounted on the dashboard R.H. panel (Fig. 4 and 5).

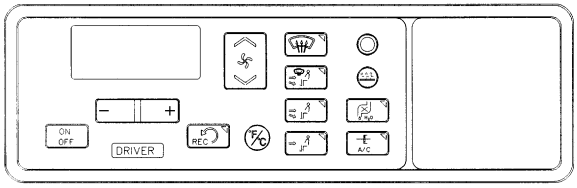

FIGURE 4: DRIVER'S HVAC SYSTEM CONTROL UNIT 22184

NOTE
The driver's area air temperature sensor is located behind the grill of the R.H. side console or inside the footwell, at the ceiling at the right of the steering column (Refer to fig.12).

3.1 VEHICLES EQUIPPED WITH A TM-16HD SELTEC COMPRESSOR

This system is completely independent, it has its own condenser, evaporator and compressor.

3.2 VEHICLES EQUIPPED WITH A CENTRAL SYSTEM

The driver's HVAC unit piping is paralleled with the main HVAC unit piping. Both units use the same refrigerant and coolant, and are linked to the same condenser and compressor, even if they are individually controlled. It requires the main HVAC unit to engage the A/C compressor magnetic clutch. Consequently, the driver's unit cannot be operated in the A/C mode alone.

3.3 DRIVER'S AREA AIR TEMPERATURE SENSOR RESISTANCE CHART

The following table and 2% error chart can be used to troubleshoot the driver's area air temperature sensor.

Temp °C	Temp °F	Resistance Ohms
-40	-40	100865
-35	-31	72437
-30	-22	52594
-25	-13	38583
-20	-4	28582
-15	5	21371
-10	14	16120
-5	23	12261
0	32	9399
5	41	7263
10	50	5658
15	59	4441
20	68	3511
25	77	2795
30	86	2240
35	95	1806
40	104	1465
45	113	1195
50	122	980
55	131	808
60	140	670
65	149	559
70	158	468
75	167	394
80	176	333
85	185	283
90	194	241
95	203	207
100	212	178
105	221	153
110	230	133
115	239	115
120	248	100
125	257	88
130	266	77
135	275	68
140	284	60
145	293	53
150	302	47

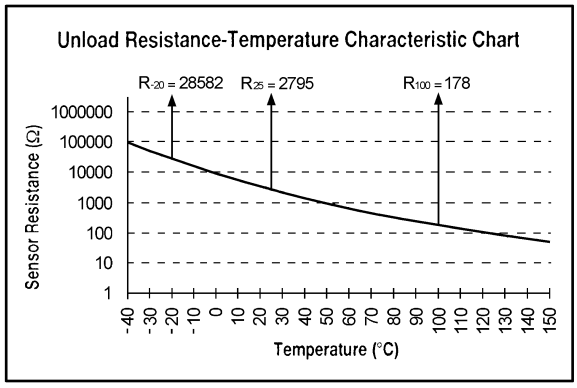

4. CENTRAL HVAC SYSTEM OPERATION

The HVAC control unit located on the dashboard R.H. panel, enables the selection of the temperature in the passenger area (or the living space for a converted vehicle) (refer to the Operator's Manual for details).

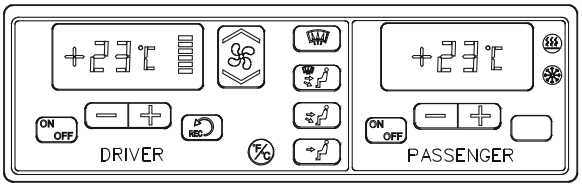

FIGURE 5: CENTRAL HVAC SYSTEM CONTROL UNIT 22274

Temperature control is provided in conjunction with a thermistor sensor inside register duct, located amidships on L.H. side of vehicle (Figs. 3 & 6).

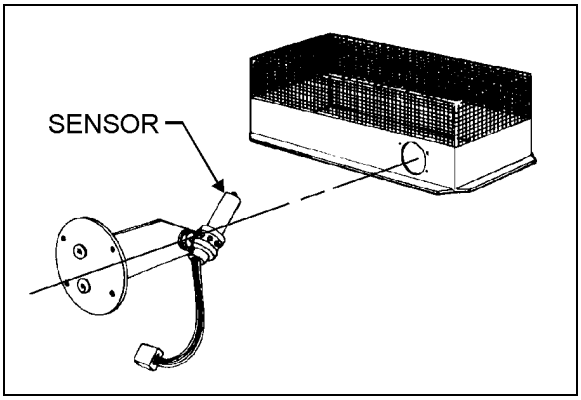

FIGURE 6: THERMISTOR SENSOR 22064

The flow of water to the vehicle's main heater core is controlled by an electric water valve which is open or closed depending on selected temperature. A red LED, located on HVAC control unit, illuminates when heating mode is selected. A green LED illuminates when compressor clutch is in operation.

The evaporator fan motor, located in evaporator compartment, is protected by a 120 amps, manually resettable circuit breaker. The condenser fans, located in the condenser compartment, also have circuit protection via 40 amps manually resettable circuit breakers. The breakers are located in the A/C junction box in the evaporator compartment.

NOTE
The outside temperature sensor is located behind the front bumper on the L.H. side.

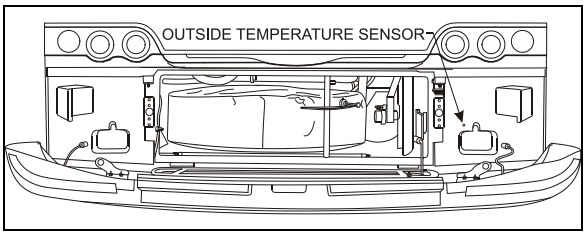

FIGURE 7: LOCATION OF OUTSIDE TEMPERATURE SENSOR

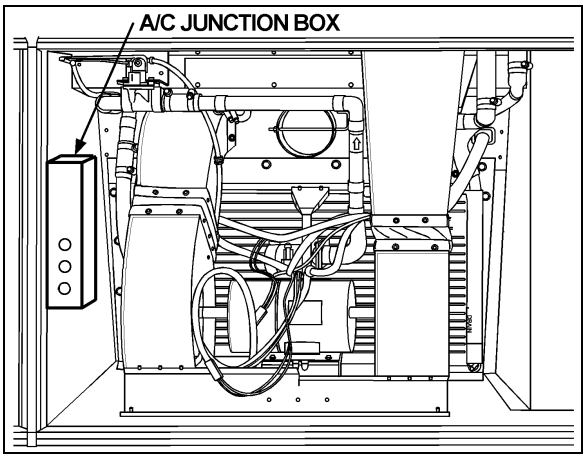

FIGURE 8: LOCATION OF A/C JUNCTION BOX IN EVAPORATOR COMPARTMENT
22178F

In order to operate the A/C system when vehicle is stationary, run the engine at fast idle. During operation of A/C system, windows should be kept closed and door(s) not left open longer than necessary. In order to prevent battery discharge, A/C & heating system will not operate when charging system is malfunctioning.

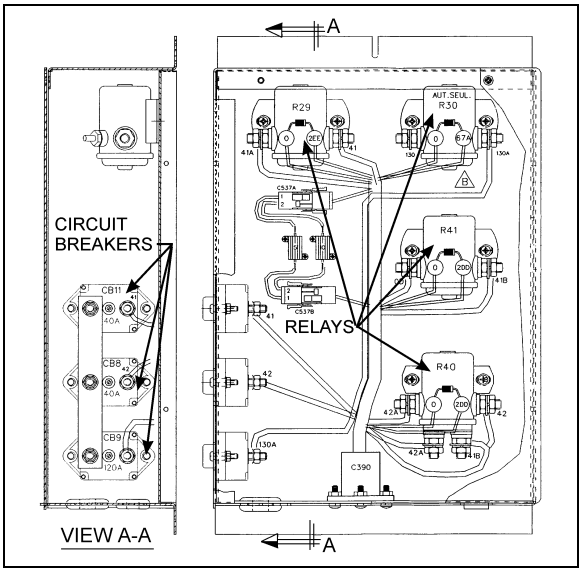

FIGURE 9: A/C JUNCTION BOX 06317

4.1 PARCEL RACK A/C (XL2 COACHES)

Optional small A/C evaporator coils may be added to both parcel racks existing air system. These auxiliary A/C system components are separate and completely independent of driver's and central systems and permit a wider temperature range in the passenger's area. The three-position rocker switch used to control the fans also controls the A/C system.

5. HVAC UNIT MAINTENANCE

No special maintenance is required on the central, driver's and auxiliary HVAC units, with the exception of cleaning their respective coils and air filters, plus periodic inspection for broken drains, hoses and charging of system.

5.1 COIL CLEANING

NOTE
Squeeze rubber hose located underneath the appropriate compartment to eliminate the accumulated water and dirt when you make routine maintenance.

Check the external surface of the coil at regular intervals for dirt or any foreign matter.

For the driver's HVAC unit, flush the coil from inside. For the evaporator, back flush the coil (Fig. 10) every 12,500 miles (20 000 km) or once a year, whichever comes first.

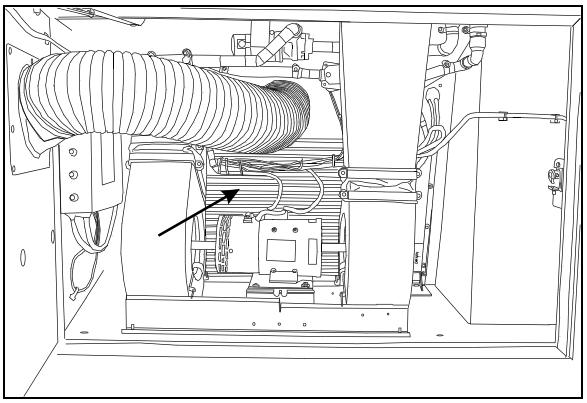

FIGURE 10: EVAPORATOR COIL CLEANING 22244

For the condenser coil, back flush the coil (Fig. 11) every 6,250 miles (10 000 km) or twice a year, whichever comes first.

⚠ CAUTION ⚠
Use a water jet or water mixed with low air

pressure to clean the coil.

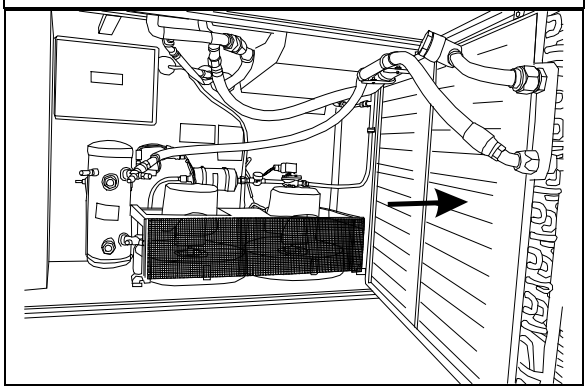

FIGURE 11: CONDENSER COIL CLEANING 22243A

⚠ CAUTION ⚠

Direct the pressure straight through the coil to prevent bending of fins and do not use extremely high pressure. Do not use hot water, steam or caustic soap.

5.2 DRIVER'S HVAC UNIT AIR FILTER

The driver HVAC system is located behind the dashboard's R.H. side lateral plastic panel. To gain access to the A/C filters, unscrew the R.H. lateral console's grill located at the top step of the entrance door steps. Slide out the R/A and F/A filters. To clean filters back flush with water, then dry with air, every 12,000 miles (20 000 km) or once a year, which-ever comes first (Fig. 12).

NOTE

If the windshield is continuously fogged, check that the driver's air filter is not clogged.

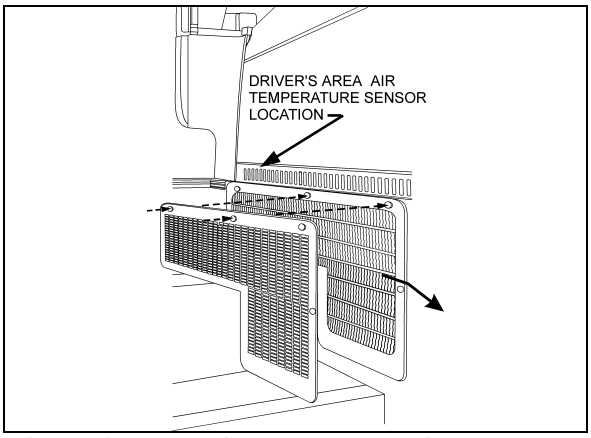

FIGURE 12: DRIVER'S AREA AIR FILTERS 22193

5.3 MAIN HVAC UNIT AIR FILTER

The main or cabin air filter is located in the evaporator compartment. To access the filter on XL2 coaches, open baggage compartment door located in front of the evaporator compartment (L.H. side). Open access panel by turning the three screws of panel ¼ of a turn, unsnap both fasteners on top of filter, and slide out filter (Fig. 13). On MTH, to gain access, open evaporator compartment door. Remove filter panel by unscrewing the six fixing screws. Slide out the filter for cleaning (Fig. 14). To clean filter, back flush with water or soapy water, then dry with air every 12,000 miles (20 000 km) or once a year, whichever comes first.

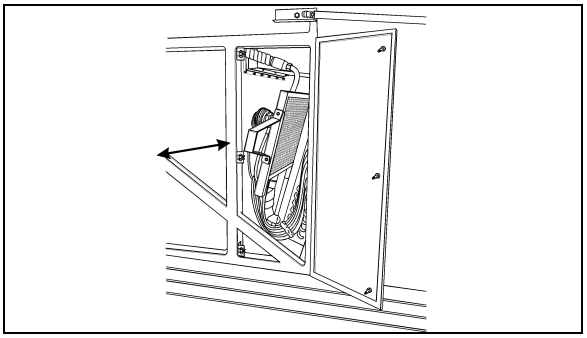

FIGURE 13: MAIN HVAC UNIT AIR FILTER 22179

⚠ CAUTION ⚠

Do not use high pressure water jet to avoid damaging filter.

⚠ CAUTION ⚠

Be sure not to reverse filter upon installation.

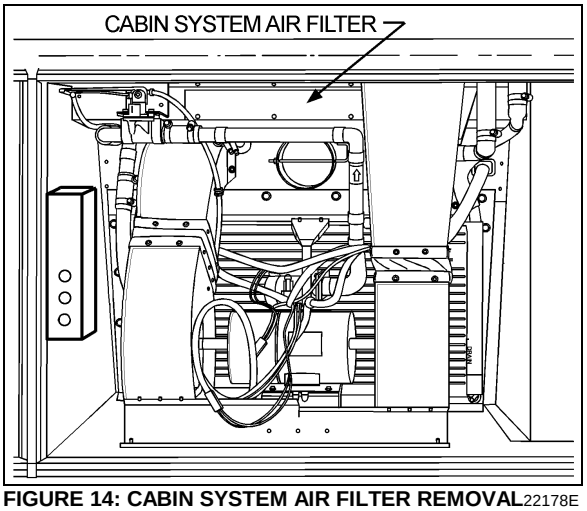

FIGURE 14: CABIN SYSTEM AIR FILTER REMOVAL 22178E

5.4 PARCEL RACK FAN AIR FILTER

A/C evaporator coils may be installed in both parcel rack air systems. Only the air filters are serviceable. The air filters are accessible from inside the parcel racks. Slide out the filters, then back flush with water, dry with air and replace. This procedure should be done every 12,000 miles (20,000 km) or once a year, whichever come first.

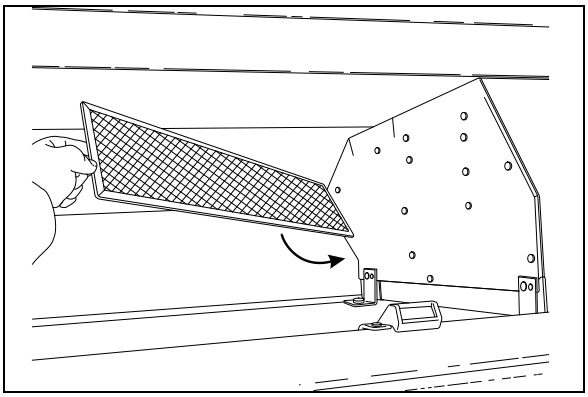

FIGURE 15: PARCEL RACK FAN AIR FILTER 22201

For A/C unit, ball valves are added on supply and return lines in the condenser compartment. They have service port to evacuate the A/C parcel rack circuit. When work has to be done on an evaporator coil unit, it will be easier to remove it and repair it on a bench.

6. EVAPORATOR MOTOR

(Central HVAC system only)

The evaporator motor is installed in the evaporator compartment (L.H. side of vehicle) (Fig. 16). It is a 27.5 volt, 2 HP (1.5 kW) motor which activates a double blower fan unit.

6.1 REMOVAL

1. Set the battery master switch to the *"OFF"* position.
2. Open the last L.H. side baggage compartment door. Pull the black release button located on the L.H. side in order to unlock and open the evaporator compartment door.
3. Identify the L.H. side discharge duct inside compartment and remove the Phillips head screws retaining the flexible member to duct.
4. Repeat step 3 for the R.H. side air duct.

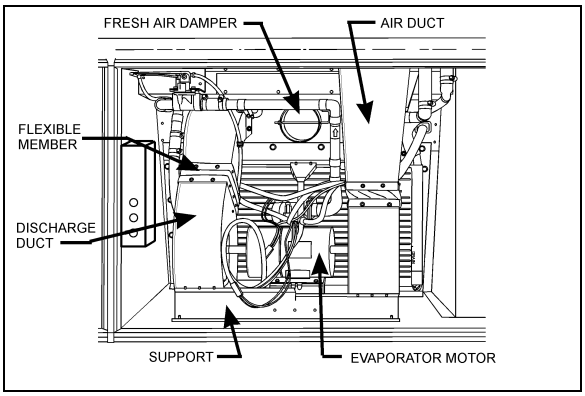

FIGURE 16: HVAC COMPARTMENT 22178

5. Disconnect the discharge air sensor connector. Remove the cable tie securing wire.
6. From under the vehicle, remove the eight bolts retaining the evaporator fan motor support. Remove the complete unit from the evaporator compartment (Fig. 17).

⚠ CAUTION ⚠

Never support evaporator motor by its output shafts while moving it.

7. On a work bench, unscrew the fan square head set screws, the Phillips head screws retaining cages to support and slide out the assemblies from the evaporator motor output shaft.

6.2 INSTALLATION

To reinstall the evaporator motor, reverse "Evaporator Motor Removal" procedure.

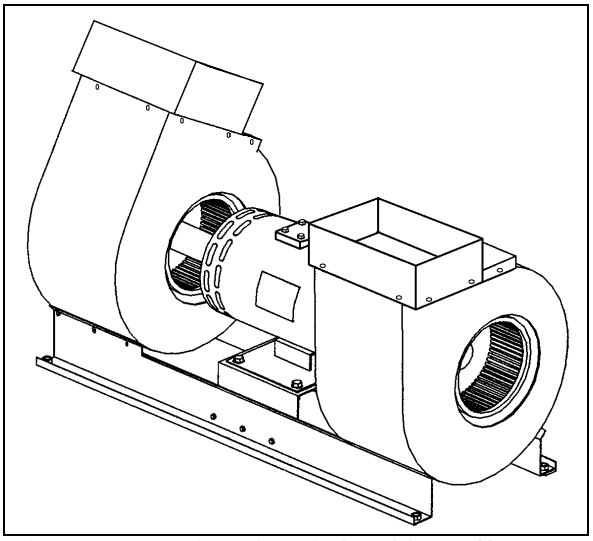

FIGURE 17: EVAPORATOR MOTOR ASSEMBLY 22208

6.3 CHECKING OPERATION OF BRUSH IN HOLDER

Lift brush slightly 1/8 inch (3 mm) and release it. Brush must produce a dry noise.

6.4 BRUSH WEAR INSPECTION AND REPLACEMENT

⚠ CAUTION ⚠

Only use replacement brushes recommended by the manufacturer. Not doing so will void warranty.

Replace the brushes if less than ¾ inch (19 mm). New brush length is 1-¼ inch. Clean brushes with a clean cloth impregnated with gasoline or alcohol.

⚠ WARNING ⚠

Cleaning products are flammable and may explode under certain conditions. Always handle in a well ventilated area.

To replace brushes, proceed as follows:

1. Set battery master switch to the "OFF" position.
2. Remove the protective screen band from the motor housing by pulling down the spring loaded fastener.
3. Lift the spring, remove and replace brushes as per the standard procedure.
4. Reverse installation procedure.

6.5 BRUSH HOLDER ADJUSTMENT

NOTE

The brush holders are mounted on a support that can rotate. Rotating that support will move all the brush holders at the same time.

1. Remove the screws securing the grid and remove the grid. Locate the 2 bolts fixing the mechanism permitting the rotation of the brush holder support.
2. Loosen (do not remove) the bolts just enough to release the mechanism.
3. Move gently the exposed brush holder in order to have a maximum distance of 10 mm (3/8 inch) between the brush holder face and a reference line passing through the center of the 2 bolts on the motor housing.

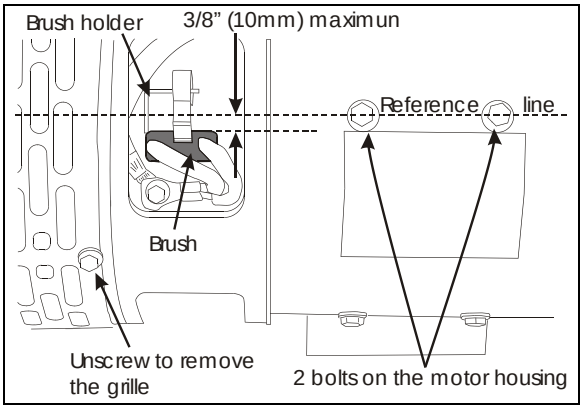

FIGURE 18: EVAPORATOR MOTOR

6.6 CHECKING COMMUTATOR

The surface must be polished. A brown-black colored surface is normal and indicates a good switching. Ensure there is no evidence of arcing or metal chips.

7. CENTRAL AIR CONDITIONING SYSTEM

The schematic of Figure 19 shows the central and auxiliary A/C system and their components. The central system is equipped with a 6 cylinder, 05G-134A Carrier compressor with an air conditioning capacity of 7½ tons. The receiver tank and filter dryer are mounted inside the condenser compartment.

XL2 Coaches may be supplied with central and auxiliary A/C system (Fig. 19). XL2 Converted vehicles (Shells) may be supplied with central or driver's A/C system only (Fig. 19 and 20). Auxiliary and driver's A/C systems come with a 6 cylinder, TM-16HD Seltec compressor with an air conditioning capacity of 2 tons.

7.1 A/C CYCLE

Refrigeration may be defined as "the transfer of heat from a place where it is not wanted to a place where it is unobjectionable". Components required for a closed circuit refrigeration system are shown in Figures 19 and 20.

The air conditioning system used on XL2 series vehicle is of the *"Closed"* type using *"R-134a".*

1. The refrigerant flowing to the compressor is compressed to high pressure and reaches a temperature higher than the surrounding air. It is passed through the air-cooled fins and tubes of the condenser causing the hot, high pressure gas to be condensed into a liquid form.
2. The liquid refrigerant flows to the receiver tank, then back to the condenser sub-cooler. It leaves the condenser and passes through a filter dryer where moisture, acids and dirt are removed and then through a moisture indicator which indicates if any moisture is present in the system.
3. By its own pressure, the liquid refrigerant flows through a thermal expansion valve where the pressure drop causes the refrigerant to vaporize in a vapor-liquid state at a low temperature pressure.
4. The cold low pressure refrigerant passes through the main and the driver's evaporator coils which absorbs heat from the air passing over the fins and tubes, and changes into gas. In this form, the refrigerant is drawn into the compressor to repeat the air conditioning cycle.
5. The success of the air conditioning system depends on retaining the conditioned air within the vehicle. All windows and intake vents should be closed. An opening of approximately 8 in^2 (5162 mm^2) could easily neutralize the total capacity of the system.
6. Other causes of inadequate cooling are dirty coils or filter. Dirt acts as insulation and is also serves as a restriction to the air flow.
7. The refrigeration load is not constant and varies. It is also affected by outside temperature, relative humidity, passenger load, compressor speed, the number of stops, etc.
8. The compressor will load or unload depending on operating conditions.

7.2 REFRIGERANT

The A/C system of this vehicle has been designed to use Refrigerant 134a as a medium. Regardless of the brand, only R-134a must be used in this system. The chemical name for this refrigerant is Ethane, 1, 1, 1, 2-Tetrafluoro.

⚠ WARNING ⚠

Refrigerant in itself is nonflammable, but if it comes in contact with an open flame, it will decompose.

7.2.1 Procurement

Refrigerant is shipped and stored in metal cylinders. It is serviced in 30 and 100 pound (13,6 and 45 kg) cylinders. Approximately 24 pounds (10,9 kg) are used in the system. If vehicle is equipped with only a driver's A/C system, then 7.0 lbs (3,2 kg) (W0) or 7.5 lbs (3,4 kg) (W5 and WE) are used and approximately 5.5 lbs (2,5 kg) are used in an auxiliary A/C system.

It will be impossible to draw the entire refrigerant out of the cylinder. However, the use of warm water when charging the system will assure the extraction of a maximum amount of refrigerant from the cylinder.

7.2.2 Precautions in Handling Refrigerant

1. Do not leave refrigerant cylinder uncapped.
2. Do not subject cylinder to high temperatures, do not weld or steam clean near system or cylinder.
3. Do not fill cylinder completely.
4. Do not discharge vapor into an area where a flame is exposed.
5. Do not expose the eyes to liquid refrigerant.

All refrigerant cylinders are shipped with a heavy metal screw cap. The purpose of the cap is to protect the valve and safety plug from damage. It is a good practice to replace the cap after each use of the cylinder for the same reason. If the cylinder is exposed to the sun's radiant heat pressure increase resulting may cause release of the safety plug or the cylinder may burst.

For the same reason, the refrigerant cylinder should never be subjected to excessive temperature when charging a system. The refrigerant cylinder should be heated for charging purposes by placing it in 125°F (52°C) water. Never heat above 125°F (52°C) or use a blowtorch, radiator, or stove to heat the cylinder. Welding or steam cleaning on or near any refrigerant line or components of the A/C system could build up dangerous and damaging pressures in the system.

If a small cylinder is ever filled from a large one, never fill the cylinder completely. Space should always be allowed above the liquid for expansion. Weighing cylinders before and during the transfer will determine the fullness of the cylinders.

⚠ WARNING ⚠

One of the most important precautions when handling refrigerant consists in protecting the eyes. Any liquid refrigerant which may accidentally escape is approximately -40°F (-40°C). If refrigerant comes in contact with the eyes, serious injury could result. Always wear goggles to protect the eyes when opening refrigerant connections.

7.2.3 Treatment in Case of Injury

If liquid refrigerant comes in contact with the skin, treat the injury as if the skin was frost-bitten or frozen. If liquid refrigerant comes in contact with the eyes, consult an eye specialist or doctor immediately. Give the following first aid treatment:

1. Do not rub the eyes. Splash eyes with cold water to gradually bring the temperature above the freezing point.
2. Apply drops of sterile mineral oil (obtainable at any drugstore) in the eyes to reduce the possibility of infection. The mineral oil will also help in absorbing the refrigerant.

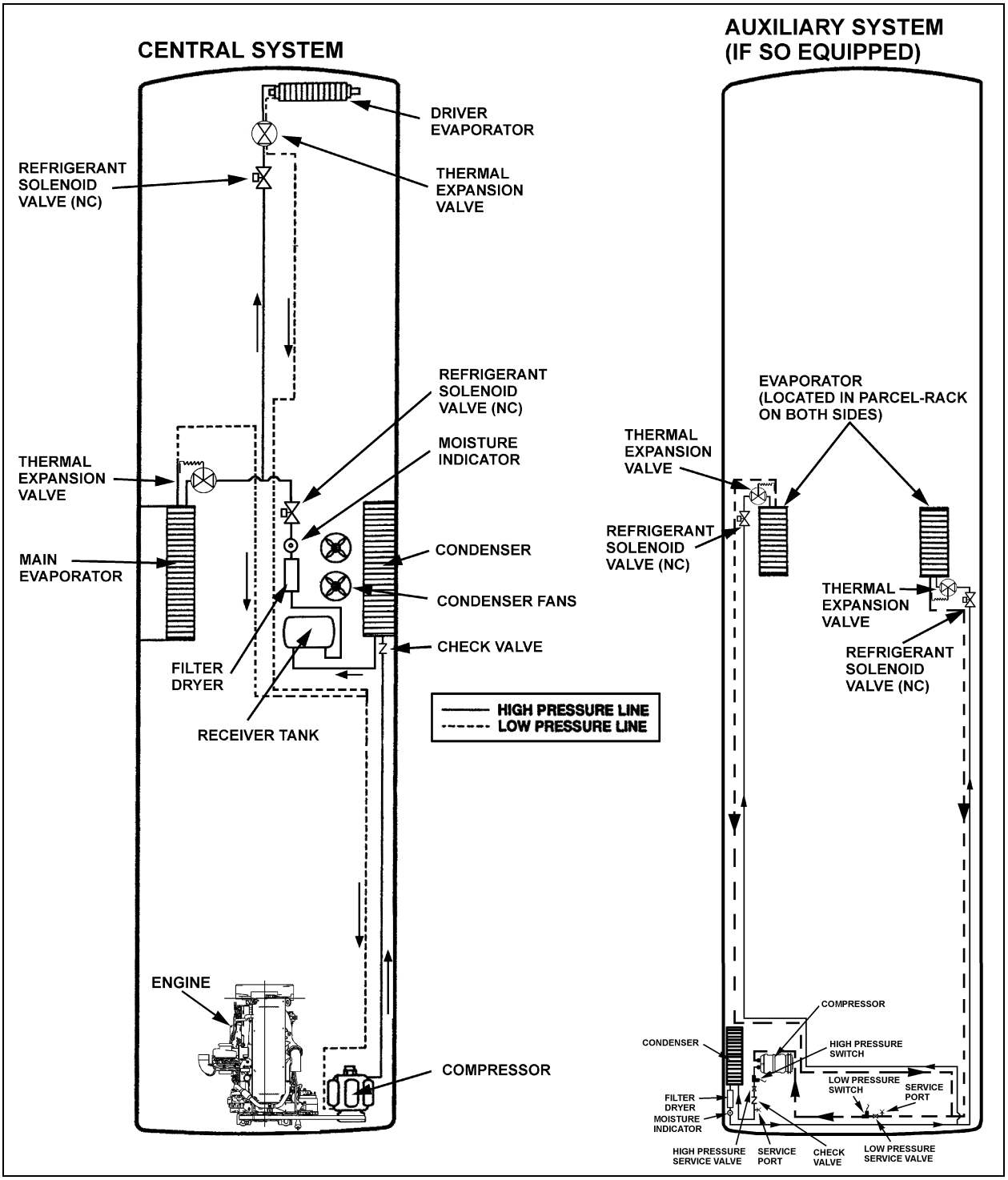

FIGURE 19: REFRIGERANT CIRCUIT (CENTRAL AND AUXILIARY SYSTEMS) 22247

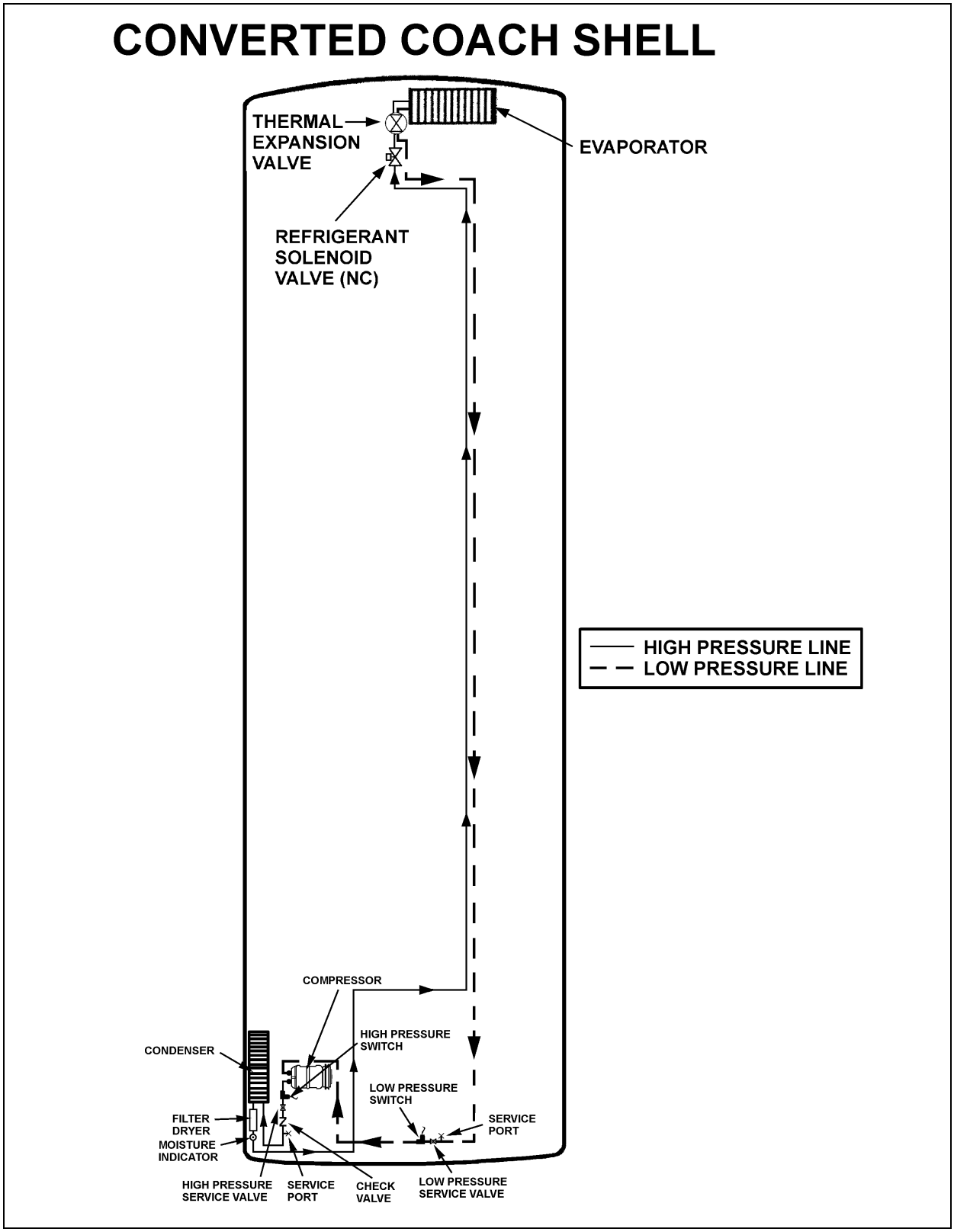

FIGURE 20: REFRIGERANT CIRCUIT (DRIVER'S AUXILIARY SYSTEM) 22246

7.2.4 Precautions in Handling Refrigerant Lines

1. All metal tubing lines should be free of kinks, because of the resulting restrictions on the flow of refrigerant. A single kink can greatly reduced the refrigeration capacity of the entire system.
2. The flexible hose lines should never be allowed to come within a distance of 2-½" (6,3 cm) from the exhaust manifold.
3. Use only sealed lines from parts stock.
4. When disconnecting any fitting in the refrigeration system, the system must first be discharged of all refrigerant. However, proceed very cautiously, regardless of gauge readings. If there happens to be liquid refrigerant in the line, disconnect fittings very slowly, keeping face and hands away so that no injury can occur. If pressure is noticed when fitting is loosened, allow it to bleed off very slowly.

⚠ WARNING ⚠

Always wear safety goggles when opening refrigerant lines.

5. In the event that any line is opened to the atmosphere, it should be immediately capped to prevent entrance of moisture and dirt.
6. The use of the proper wrenches when making connections on O-ring fittings is important. The use of improper wrenches may damage the connection. The opposing fitting should always be backed up with a wrench to prevent distortion of connection lines or components. When connecting the flexible hose connections, it is important that the swaged fitting and the flare nut, as well as the coupling to which it is attached, be held at the same time using three different wrenches to prevent turning the fitting and damaging the ground seat.
7. The O-rings and seats must be in perfect condition. The slightest burr or piece of dirt may cause a leak.
8. O-rings should be coated with refrigeration oil and installed on the line before the line is inserted into the fitting to prevent damaging the O-ring. If leaks are encountered at the couplings or connectors, no attempt should be made to correct the leaks by tightening the connections beyond the recommended torque. The O-rings are designed to seal at the specified torque and overtightening the connection does not result in a satisfactory and permanently sealed connection. The connection must be disassembled and the cause of the leak (damaged O-ring, defective lines, etc.) corrected. Use new O-ring.

7.2.5 Auxiliary System Refrigerant Lines

1. From the inside of the coach, remove the mirror located inside the lavatory to access the Y connector separating the system two sides. Also a small access panel located in front of the lavatory entrance door, near the ceiling enables to reach the R.H. side supply and return line fittings.
2. The L.H. side supply and return line fittings are accessible by removing the rearmost overhead storage compartment separator.

7.3 PUMPING DOWN

This procedure is intended to reduce refrigerant loss, on central system only, by isolating it in the compressor and the receiver tank, as well as in their connecting line, in order to carry out repairs on other sections of the air conditioning system (lines and components).

NOTE

Before attempting any repair between compressor and receiver tank, use a recovery unit to remove refrigerant from the system.

NOTE

On vehicles equipped with an auxiliary or driver's A/C system only, refer to "Auxiliary Air Conditioning system and components": paragraph 9.9 "OIL RETURN OPERATION" and 9.3.4 "Refrigerant Recovery", further in this section.

⚠ WARNING ⚠

To prevent any injury, when air conditioning system must be opened, refer to previous paragraph "PRECAUTIONS IN HANDLING REFRIGERANT".

⚠ CAUTION ⚠

The filter dryer must be changed each time a line in the system is opened.

Procedure

1. Energize passenger side liquid solenoid valve.
2. Run the system for 10 minutes, shut it OFF, then close the receiver tank outlet valve by turning it clockwise, backseat the suction service valve on the compressor, install an appropriate pressure gauge set, and turn the valve forward ¼ turn to enable a visual check of the suction pressure.
3. Disconnect the *"Low Pressure Switch"* connector (mounted near the A/C compressor, and install a jumper wire.

NOTE

This jumper wire will allow the clutch to remain engaged after pressure drops below 15 psi (103,5 kPa).

4. Start the engine, press the *"Passenger ON/OFF"* switch then the A/C switch, adjust *"A/C Temperature"* control to maximum A/C.
5. Run the compressor until pressure reaches 1-2 psi (7-14 kPa).

NOTE

During this operation, care must be taken not to fill the receiver tank over the upper sight glass. If so, stop process immediately. Always allow refrigerant piping and units to warm up to the ambient air temperature before opening system or sweating will take place inside the lines.

6. Stop engine, and close compressor outlet valve by turning it clockwise until valve is properly seated.
7. Close compressor suction valve by turning it clockwise until it is properly seated.
8. Wait until pressure gauge reaches 1 to 2 psi (7 to 14 kPa). To accelerate procedure, lightly open compressor suction valve until pressure reaches this value.

7.4 ADDING REFRIGERANT (VAPOR STATE)

Use the suction service valve on the compressor to add a small quantity of refrigerant to the system. Backseat the valve and connect a charging line from the refrigerant cylinder to the valve. Tighten connection at level of refrigerant cylinder and open tank end slightly to purge air from the charging line. Tighten the charging line at the compressor. Screw in the stem of suction valve approximately two turns. Start the engine and run at fast idle. Add sufficient refrigerant to bring the level in lower sight glass of receiver tank to mid-point. Always charge the system with the cylinder upright and the valve on top to avoid drawing liquid out of the cylinder.

7.5 EVACUATING SYSTEM

1. Open both receiver valves by turning "out" (normal position).
2. Remove the caps from the two 90° adapters on the suction, discharge valves and connect two hoses to the vacuum.
3. Place the two compressor valves, suction and discharge, in neutral position by turning each one 3 to 4 turns "in" from the "out" position.
4. Open the solenoid valve by energizing or manually bypass.
5. Start the vacuum pump. Open the large (suction) shutoff valve and close the small vacuum gauge valve.
6. The pressure will drop to approximately 29 inches vacuum (14.2 psi or 97,9 kPa) (the dial gauge only gives a general idea of the absolute system pressure.
7. Backseat the compressor valves by turning "out" all the way.
8. Shut down the vacuum pump.
9. Remove the hoses.
10. Reinstall the caps at the suction valve take-off points.

7.5.1 Double Sweep Evacuation Procedure

1. Remove any remaining refrigerant from the system using a refrigerant recovery machine.
2. Connect the evacuation manifold, vacuum pump, hoses and micron gauge to the unit.
3. With the unit service valves closed (back seated) and the vacuum pump and the thermistor valves open, start the pump and draw the manifold and hoses into a very deep vacuum. Shut the vacuum pump off and see if the vacuum holds. This is to check the setup for leaks.
4. Midseat the system service valves.
5. Open the vacuum pump and the thermistor valves. Start the pump and evacuate to a system pressure of 2000 microns.
6. Close the vacuum pump and the thermistor valves, turn off the vacuum pump (closing the thermistor valve protect the valve from damage).
7. Break the vacuum with clean refrigerant (or dry nitrogen) and raise the pressure to approximately 2 PSIG. Monitor the pressure with the compound gauge.
8. Remove the refrigerant with the recovery machine.
9. Repeat steps #5 – 8 one time.

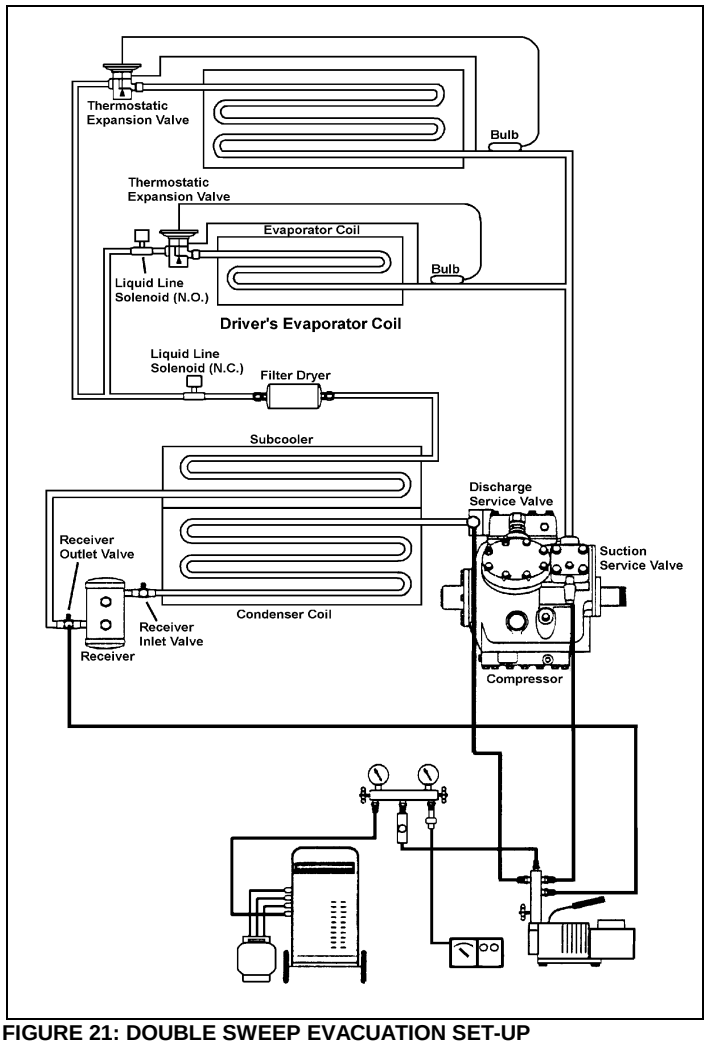

FIGURE 21: DOUBLE SWEEP EVACUATION SET-UP

10. After the second “sweep”, change the filter drier (if you have not done so) and evacuate to 500 microns.
11. Evacuating the system below 500 microns on systems using the Carrier 05G compressor may risk drawing air into the system past the carbon shaft seal.
12. Check to insure that vacuum holds. (If the pressure continues to rise, it indicates a leak or moisture in the system).
13. Charge the system with the proper amount of refrigerant using recommended charging procedures.

NOTE
This method will aid in preventing unnecessary system failures by ensuring that the refrigeration system is free of contaminants.

7.6 CHARGING SYSTEM

When a system has been opened or if there are any questions about the air or moisture in the system, evacuate the system. Charging of an evacuated system may be accomplished by forcing liquid R-134a directly into the receiver tank. This may be accomplished by placing the refrigerant cylinder upside down on a scale with the valves at the bottom. This ensures that only liquid will enter the receiver tank.

When charging an empty system, weigh the amount of refrigerant put into the system. This will eliminate any possibility of overfilling. A nominal charge requires 24 pounds (10,9 kg). If the vehicle is equipped with an auxiliary system, a full charge requires 5.6 lbs (2,6 kg), if the vehicle is equipped with a driver's system only, the system requires 7.0 lbs (3,2 kg) (W0) or 7.5 lbs (3,4 kg) (W5 and WE).

1. Backseat the two compressor shutoff valves ("out").
2. Install the test gauges at the shutoff valves noting that the 400 psi (2758 kPa) gauge is connected to the discharge.
3. Turn in the two shutoff valves 3 to 4 turns.
4. Open the lower receiver valve by turning “out” all the way.
5. Backseat the upper receiver valve by turning out all the way.
6. Remove the cover cap from the service fitting in the top receiver valve.
7. Attach a charging hose to the R-134a tank. Open the tank valve slightly permitting R-134a to escape thus purging the hose of air.
8. Connect the charging hose to the service fitting.
9. Open the R-134a tank valve.
10. To build up pressure in the receiver tank, heat the receiver tank with a heating blanket.
11. Turn in the upper receiver valve several turns. The R-134a will now enter the system.
12. The proper charge of R-134a is 24 lbs (10.89 kg). When the scale indicates this amount of charge, backseat the receiver valve and close the R-134a tank valve.
13. Disconnect the charging hose. Replace the cover caps.
14. The system is now ready for operation.

⚠ CAUTION ⚠
The evacuation of the system must be made by authorized and qualified personnel only. Refer to local laws for R-134a recuperation.

7.7 REFRIGERANT SYSTEM CLEAN-OUT AFTER COMPRESSOR FAILURE

Although the vast majority of reciprocating refrigerant compressors manufactured today are extremely reliable, a small percentage do fail. These failures usually result in minor or extensive system contamination depending on the severity of the failure. When an open type compressor becomes damaged internally, this provokes small particles of bearings, steel, brass, copper, and aluminum and, in severe cases, carbonized oil, which could contaminate the system. To prevent repeated failures, the problem which caused the failure should be corrected, and depending upon the severity of the failure, the system should be thoroughly cleaned out using one of the clean-out procedures mentioned.

7.7.1 Determining Severity of Failure

The severity of compressor failure can be categorized as minor or major. A failure is

considered minor when the contamination is limited to the compressor with little or no system contamination. A major failure, or burnout, results in extensive system contamination as well as compressor damage. Extensive system contamination can be determined by withdrawing a small sample of compressor oil and checking its color, odor and acidity. A Virginia Chemical "TKO" one step acid test kit is one of several compressor oil test kits that may be used. A high acid content would indicate a major failure or burnout. A small amount of refrigerant gas may be discharged. A characteristic burned odor would also indicate severe system contamination.

7.7.2 Clean-out after Minor Compressor Failure

1. Be sure to correct the problem which caused the failure.
2. Change liquid line filter dryer
3. Run the unit for 2 hours on high speed cool only.
4. Check compressor oil level to ensure compressor is not overcharged with oil. Sometimes a significant amount of oil is pumped out of the compressor to other parts of the system when a compressor fails. This oil will return to the replacement compressor when it is started, causing an overcharge of oil in the sump of the replacement compressor. In this case, it is important that the oil level be adjusted to the proper level.
5. Withdraw a sample of the compressor oil and check its color, odor, and acidity, using instructions supplied above. If the oil is contaminated, change the oil and filter dryer, and repeat the procedure until the system is clean.

7.7.3 Clean-out After Major Compressor Failure

1. Reclaim the refrigerant into a refrigerant bottle through a filter dryer to filter out contaminants.
2. Remove the failed compressor and repair it if possible.
3. Install new or repaired compressor.
4. Change the filter dryer.
5. Circulate clean R-134a or nitrogen with the reclaimer to clean out many of the contaminants collected in the coil valves, TXV (Thermal Expansion Valve), solenoid valves, check valves, and any other mechanical component that may have collected contaminants.
6. Evacuate and charge the system normally.
7. Run the unit for 8 hours and monitor the pressure drop across the filter dryer. Also check the liquid line dryer for signs of restriction. If the pressure drop across the filter dryer exceeds 12 to 14 psig (82,75 to 96,5 kPa) with a 40°F (5°C) evaporator coil temperature, stop the unit and change the liquid line and suction line filter dryer. After 4 or 5 hours of operation, stop the unit and replace the filter dryer.
8. After 8 hours of operation, stop the unit and remove a sample of the compressor oil and check its color, odor, and acidity, using instructions supplied above. If the oil is contaminated, replace the oil and repeat step 7. If the oil is not contaminated, change the filter dryer again and replace the moisture-liquid indicator.
9. After approximately 7 days of operation, recheck the compressor oil for cleanliness and acidity.

8. CENTRAL A/C SYSTEM COMPONENTS

8.1 COMPRESSOR (CENTRAL SYSTEM)

8.1.1 Belt Replacement

⚠ WARNING ⚠

Set the battery master switch to the “Off” position. For greater safety, set the engine starter selector switch in engine compartment to the “Off” position.

1. Open engine compartment rear doors and locate the belt tensioner pressure releasing valve (Fig. 22), mounted above the engine R.H. side door next to the air pressure regulator, then turn handle clockwise in

order to release pressure and tension on belts.

2. Slip the old belts off and the new ones on.
3. Reset belt tensioner pressure releasing valve (Fig. 22) to 50 psi (345 kPa) for coaches and to 45 psi (310 kPa) for MTH to apply tension on the new belts as explained in Section 12.

NOTE
Both belts must always be replaced simultaneously to ensure an equal distribution of load on each of them.

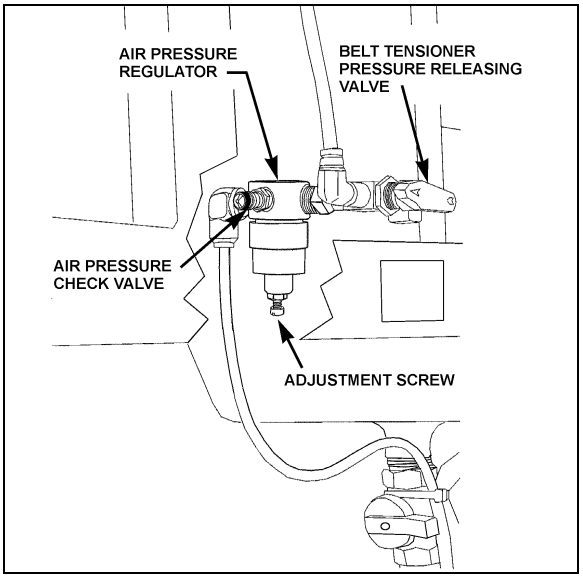

FIGURE 22: AIR PRESSURE REGULATOR 12200

NOTE
*For proper operation of the air bellows, adjust the **upper** tensioning bracket to provide a ¼ inch (7 mm) gap between stopper and bracket with the pneumatic system under normal pressure and the air pressure regulator set as per paragraph #3 (Fig. 23).*

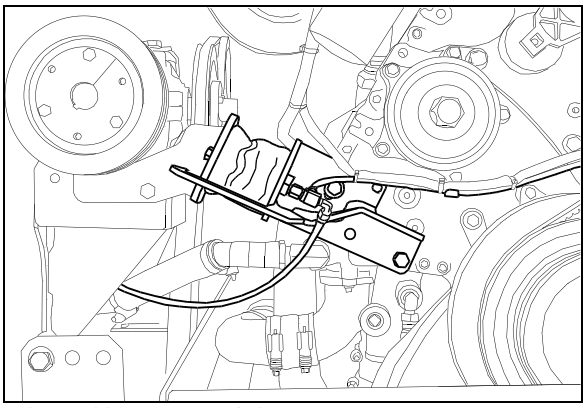

FIGURE 23: BELT TENSIONER 01059

8.1.2 Pulley Alignment

In order to avoid skipping, disengagement and a premature wear of compressor belt, it is necessary to align compressor pulley with the crankshaft pulley. Before performing the following procedure, release air from belt tensioners by means of the air pressure releasing valve. After completing these procedures reset belt tensioner air pressure regulator to 50 psi (345 kPa) or 45 psi (310 kPa).

8.1.3 Longitudinal Compressor Alignment

1. Rest an extremity of a straight edge of approximately 46 inches (117 cm) against the upper part of the outer face of crankshaft pulley, positioning the other end close to the compressor clutch pulley (Figs. 24 & 26).
2. Check the distance between each extremity of straight edge (1. Fig. 26) and the first drive belt. If they are different, loosen the compressor support bolts and with a hammer, knock support to slide it in order to obtain the same distance; then tighten bolts.

8.1.4 Horizontal Compressor Alignment

1. Rest an extremity of the straight edge against the upper part of the outer face of compressor pulley, positioning the other end close to the crankshaft pulley.
2. Check the distance between each extremity of straight edge (1, Fig. 26) and drive belt. If they are different, loosen the pillow block compressor bolts and with a hammer, knock compressor pillow block to slide it, in order to obtain the same distance; then tighten bolts.

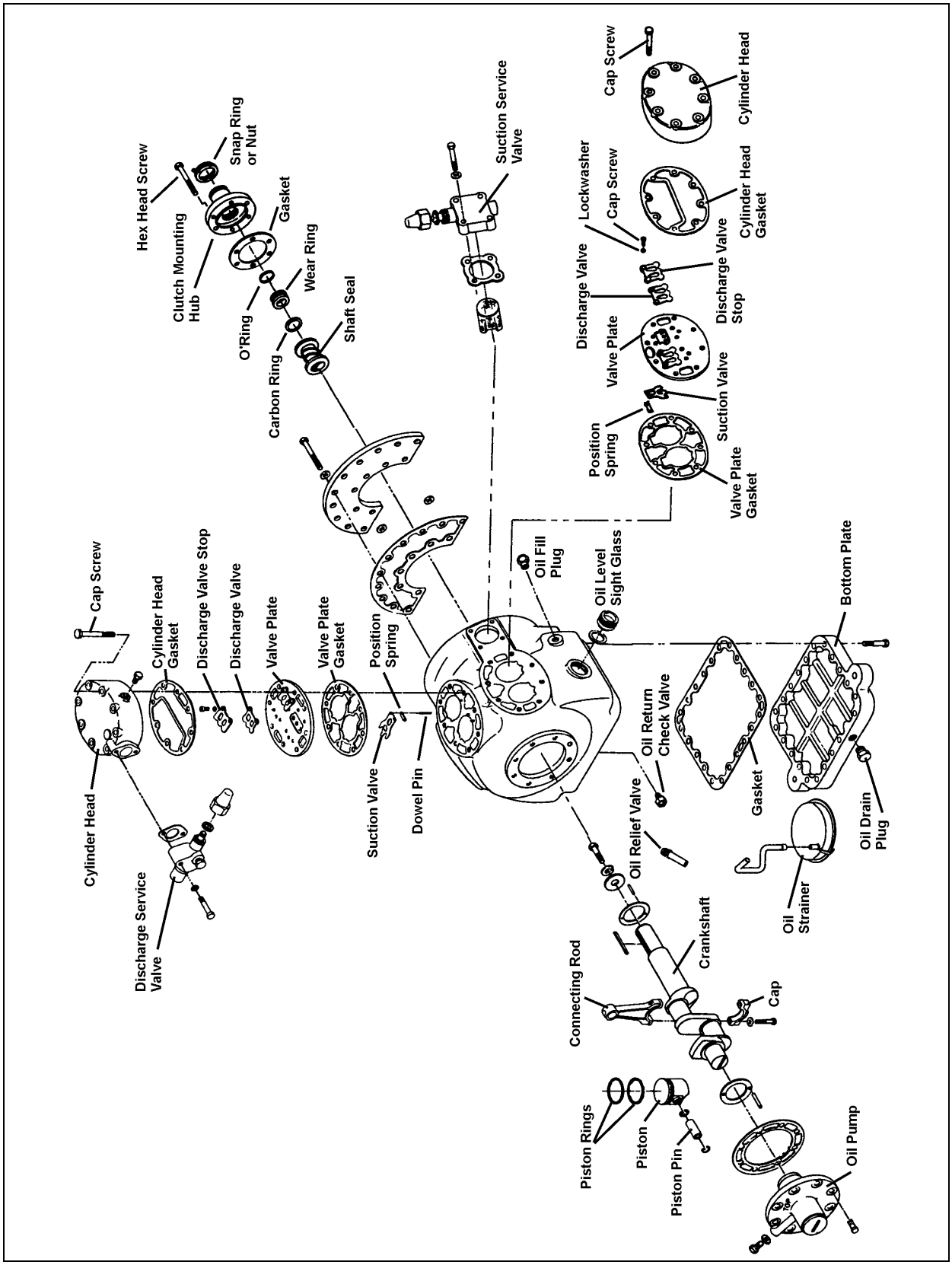

FIGURE 24: EXPLODED VIEW OF 05G COMPRESSOR 22214

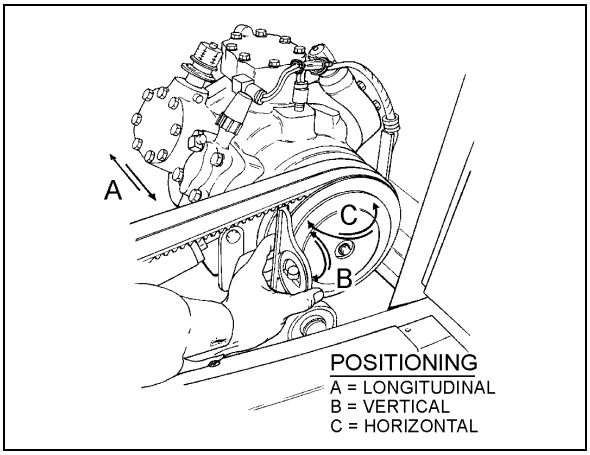

FIGURE 25: COMPRESSOR ALIGNMENT 22072

8.1.5 Vertical Compressor Alignment

Rest a short "angle and level indicator" on the outer side face of the crankshaft pulley, adjust the level indicator inclination at 0° and check if the compressor pulley is at same angle (Figs. 24 & 26). If it is not the same, shim under the appropriate pillow block in order to obtain the correct angle.

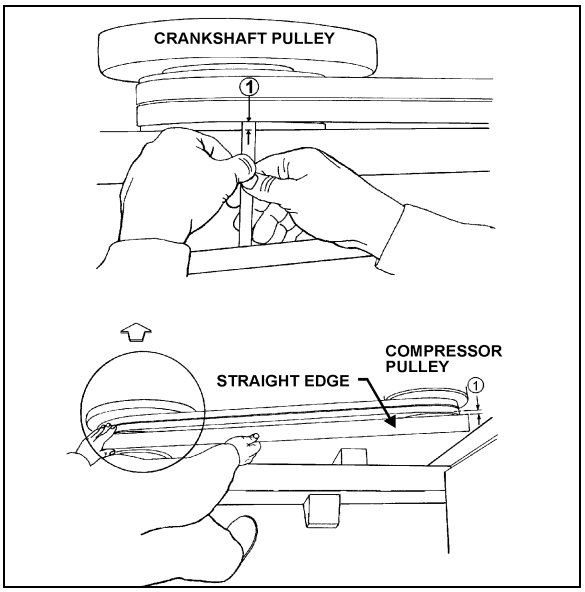

FIGURE 26: COMPRESSOR ALIGNMENT 22040

8.1.6 Compressor Maintenance

For the maintenance of the A/C compressor, see the *"Carrier Compressor Operation and Service Manual"* included at the end of this section.

⚠ CAUTION ⚠

Use only Castrol SW 68 (POE) oils with refrigerant 134a.

8.1.7 Troubleshooting Guide

A preliminary check may be made by simply feeling the cylinder heads with the unit in operation at ambient temperatures of $35^{o}F$ ($2^{o}C$) and over. The cylinder heads are internally divided into suction and discharge valves. The lower half of the cylinder head is the suction side, and it should be relatively cool to the touch, as opposed to the hot upper discharge side. If a valve plate or head gasket is blown, or a compressor unloader is stuck open, partially compressed refrigerant vapor will be circulated between the suction and discharge sides of the head. The affected cylinder head will then have a relatively even temperature across its surface and be neither as hot as the normal discharge temperature nor as cool as the normal suction temperature.

Blown Head Gaskets

Symptom:

* Loss of unit capacity at low temperature.
* Even cylinder head temperature.

Cause:

* Improperly torqued cylinder head bolts.
* Improperly positioned gasket at assembly.
* Warped cylinder head.
* Severe liquid refrigerant floodback.

Blown Valve Plate Gaskets

Symptom:

* Loss of unit capacity at medium and low temperatures.
* Very hot cylinder head surface.
* Higher than normal suction pressure.

Cause:

* Improperly torqued cylinder head bolts.
* Severe liquid refrigerant floodback.

* Oil slugging caused by an overcharge of oil or flood starts.

* Discharge valves not seated properly (liquid drainback during shutdown).

Broken Suction Valves

Symptom:

* Loss of unit capacity at all temperatures.

* Compressor unable to pull extremely low vacuum with suction service valve frontseated.

Cause:

* Repeated liquid refrigerant floodback.

* Flooded starts.

* Overcharge of oil.

* Discharge valves not seated properly (liquid drainback during shutdown).

* Expansion valve not controlling properly.

Unloader Valve Stuck Open

Symptom:

* Loss of unit capacity at all temperatures.

* Higher than normal suction pressure.

* Even cylinder head temperature.

Cause:

* Unloader body stem bent.

* Foreign material binding unloader piston or plunger.

8.2 MAGNETIC CLUTCH

Refer to Carrier service information entitled "Housing-Mounted Electric Clutch" at the end of this section for the description and maintenance of the magnetic clutch.

8.3 CONDENSER

The central A/C system condenser coil is hinge mounted on the R.H. side of the vehicle on the A/C condenser door (Fig. 28). The condenser coil, for vehicles equipped with an auxiliary or a driver's A/C system only, is mounted on the outer face of engine radiator. Since condenser's purpose is to dissipate heat from the hot refrigerant, it is important to keep the cooling coils and fins clean. A clogged coil will cause high discharge pressure and insufficient cooling.

8.3.1 Condenser Fan Motors

Two fan motors (Fig. 27), 28.5 V - (0.6 HP - 0.42 kW) and cages are installed in the condenser compartment on R.H. side of vehicle in order to ventilate the condenser coil. They are mounted on a support, fastened to the floor. The fans pull outside air through the condenser coil and discharge it through an opening at bottom of compartment. When temperature drops inside condenser, the pressure in the refrigerant line also drops and it is, therefore, no longer required to cool condenser. Consequently, when pressure drops to 130 psi, the motors will run at low speed and if the pressure continues to drop to 90 psi, a pressure switch stops the motors so that fans do not operate needlessly. When pressure rises to 120 psi, the pressure switch reactivates the motors. If the pressure rises to 170 psi, the motors will switch to high speed.

For details about electrical wiring, refer to *"A/C and Heat system"* in the master wiring diagram.

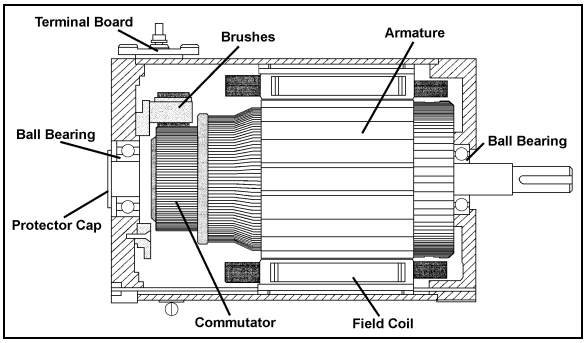

FIGURE 27: CONDENSER FAN MOTOR 22234

8.3.2 Condenser Fan Motor Removal

1. Set the battery master switch to the *"Off"* position.

2. Remove the two *"Phillips"* head screws retaining the fan motor protective cover to the square tubing. Remove the protective grill from mounting support.

3. Disconnect wiring from terminals on motor. Tag each wire to aid in identification at time of reconnection.

4. Support motor, and remove bolts which attach motor to mounting bracket. Remove the motor.

8.3.3 Preliminary Disassembly

1. Remove the brushes.
2. Unscrew the flange retaining screws on the shaft end side (opposite to the commutator end frame), and separate flange from frame (Fig. 27).
3. Remove flange and armature assembly by pushing bearing shaft toward the commutator end frame.
4. Separate flange from armature.

8.3.4 Disassembly

1. Perform preliminary disassembly.
2. Carefully note the position of the brush holder ring and the connections on the flange support.
3. Unscrew and remove the flange on the commutator end frame.
4. Remove the brush holder ring.
5. Finally, separate the following parts: brush holders, brush boxes, terminal board, bearings, etc.

8.4 RECEIVER TANK

The receiver tank is located in the condenser compartment (Fig. 28). The function of the receiver tank is to store the liquid refrigerant. During normal operation, the level of the refrigerant should be approximately at the mid-point of the lower sight glass.

In case of extreme pressure there will be a rise in the liquid receiver tank. A pressure relief valve will break at 450 psi (3103 kPa) and relieve the receiver tank pressure.

The receiver tank incorporates an inlet valve on the inlet side (upper section) which allows the tank to be isolated or serviced. An outlet valve on the outlet side (lower section) permits complete isolation from the rest of the system.

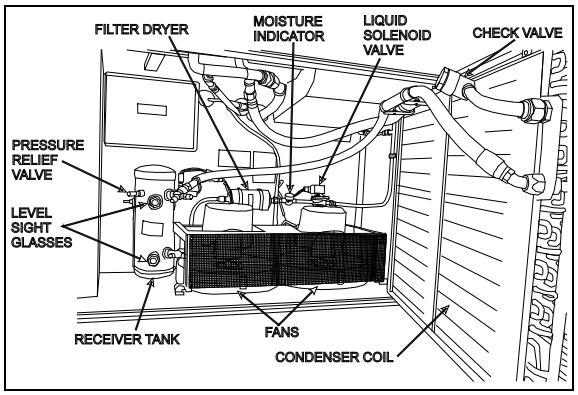

FIGURE 28: A/C CONDENSER COMPARTMENT 22243B

8.5 FILTER DRYER

A filter dryer, also located in the condenser compartment, is installed on the liquid refrigerant line after the receiver tank. It is used to absorb moisture and foreign matter from refrigerant before it reaches the expansion valves.

The filter should be replaced if the system has been opened or after a prolonged exposure, when the moisture indicator sight glass turns to pink.

A filter dryer, located close to engine compartment L.H. side rear door, is installed on vehicles equipped with an auxiliary A/C system or a driver's system only. Its function is similar to that of filter used on main systems. Replace only when system is opened or a problem occurs.

8.5.1 Replacement

The filter is of the disposable type. When replacement is required, remove and discard the complete unit and replace with a new unit of the same type according to this procedure:

1. Isolate the refrigerant in the receiver tank by following the “Pumping Down” procedure explained in this section
2. Change the filter dryer as a unit.
3. Add a small quantity of refrigerant R-134a to the low side of the system. Check for leaks. Return the system to normal operation.

⚠ CAUTION ⚠

Do not use carbon tetrachloride or similar solvents to clean parts. Do not use steam guns. Use mineral spirits or naphtha. All parts should be thoroughly cleaned. Use a stiff brush to wash dirt from grooves, holes, etc.

⚠ WARNING ⚠

Cleaning products are flammable and may explode under certain conditions. Always handle in a well ventilated area.

8.5.2 Moisture Indicator

The moisture sensitive element consists of a color changing ring which is reversible from pink to blue and vice versa as the moisture content in the refrigerant changes. Pink indicates a wet refrigerant, light violet (caution) and blue indicates a dry refrigerant.

COLOR INDICATOR			
TEMPERATURE	BLUE (ppm)	LIGHT VIOLET (ppm)	PINK (ppm)
75°F (24°C)	Below 5	5-15	Above 15
100°F (38°C)	Below 10	10-30	Above 30
125°F (52°C)	Below 15	15-45	Above 45
p.p.m.= parts per million (moisture content)			

Since temperature changes affect the solubility, color change will also vary with the refrigerant temperature. The above table shows the color change for R-134a at various moisture levels and liquid line refrigerant temperatures.

A moisture level of less than 15 p.p.m. for R-134a indicated in the blue color range of the above table is generally considered dry and safe. A color indication of light blue to light violet indicates the caution range of moisture level. For positive protection, the drying of the system should be continued until the color of the element turns to deep blue.

The liquid refrigerant is readily visible through the center opening of the moisture element where the presence of bubbles indicates a shortage of refrigerant or restriction in line.

Moisture is one of the main causes of chemical instability or contamination in air conditioning systems. If moisture is present, it can corrode the valves, condenser and evaporator coils, compressor and other components causing a malfunction and eventual failure of the system. Uncontrolled moisture in the system can result in very expensive multiple component replacements if not corrected at an early stage. The moisture indicator permits an early detection of moisture in the system and when corrected by a desiccant charge, system contamination is greatly minimized.

8.6 LIQUID REFRIGERANT SOLENOID VALVE

The flow of liquid refrigerant to the driver's and main evaporators is controlled by a normally-closed solenoid valve. The driver's liquid solenoid valve is located on the ceiling of the spare wheel and tire compartment and is accessible through the reclining bumper.

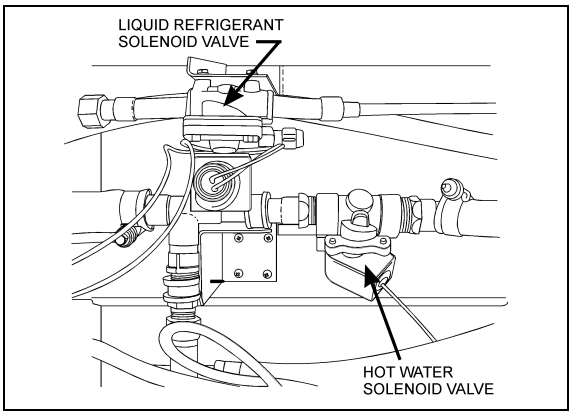

FIGURE 29: DRIVER'S EVAPORATOR LIQUID SOLENOID VALVE 22181

NOTE

An identical refrigerant solenoid valve is used on the auxiliary A/C system and is located near the auxiliary A/C unit.

8.6.1 Manual Bypass

This type of solenoid valve is equipped with a manual operating stem. The 3/16" square stem located on the bonnet is exposed when the seal cap is removed. To manually open valve, turn stem ½ turn counterclockwise. To manually close valve, turn stem clockwise until tight against seat. Manual stem must be in closed position for automatic electric operation.

8.6.2 Coil Replacement

1. Disconnect connector from the coil connector.
2. Take out the retaining screw at the top of the coil housing. The entire coil assembly can then be lifted off the enclosing tube.
3. Place the new coil and yoke assembly on the enclosing tube. Lay data identification plate in place.
4. Insert the coil retaining screw, rotate housing to proper position and tighten screw securely.
5. Connect connector from coil connector.

8.6.3 Valve Disassembly

1. Remove the coil as stated previously.
2. Pump down the system as stated earlier in this section.
3. Remove the four socket head screws which hold the body and bonnet together (Fig. 30).
4. Carefully lift off the bonnet assembly (upper part of the valve) so that plunger will not fall out. The diaphragm can now be lifted out.

NOTE
The above procedure must be followed before brazing solder-type bodies into the line.

⚠ CAUTION ⚠
Be careful not to damage the machined faces while the valve is apart.

8.6.4 Valve Reassembly

1. Place the diaphragm in the body with the pilot port extension up.
2. Hold the plunger with the synthetic seat against the pilot port.
3. Make sure the bonnet O-rings are in place. Lower the bonnet assembly over the plunger, making sure that the locating sleeve in the bonnet enters the mating hole in the body.
4. Insert the four socket head screws and tighten evenly.
5. Replace the coil as stated previously.
6. Add a small quantity of refrigerant R-134a to the low side of the system. Check for leaks. Return the system to normal operation.

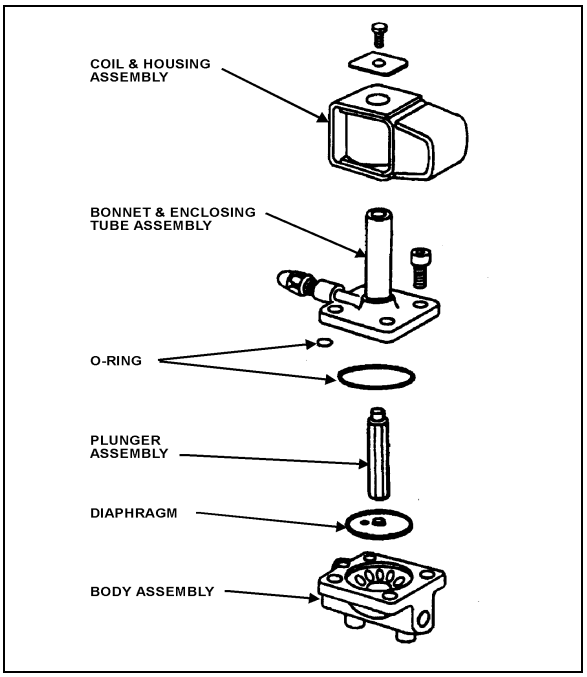

FIGURE 30: REFRIGERANT SOLENOID VALVE 22044

8.7 EXPANSION VALVE

8.7.1 Central System

The expansion valve for the central system is a thermo-sensitive valve with a remote control bulb head attached to the evaporator outlet line and is accessible by the evaporator coil access door (Fig. 13 & 31). The valve regulates the flow of refrigerant liquid into the evaporator coils and is controlled by the suction gas temperature leaving the evaporator. The bulb head senses the refrigerant gas temperature as it leaves the evaporator. High temperature will cause expansion and pressure on the power head and spring. Such action causes the assembly valve to open, allowing a flow of refrigerant liquid into the evaporator.

The remote bulb and power assembly is a closed system. The pressure within the remote bulb and power assembly corresponds to the saturation pressure of the refrigerant temperature leaving the evaporator and moves the valve pin in the opening direction. Opposed

to this force, on the under side of the diaphragm and acting in the closing direction, is the force exerted by the superheat spring. As the temperature of the refrigerant gas at the evaporator outlet increases above the saturation temperature corresponding to the evaporator pressure, it becomes superheated. The pressure thus generated in the remote bulb and power assembly surpasses the combined pressures of the evaporator pressure and the superheat spring, causing the valve pin to move in the opening direction. Conversely, as the temperature of the **refrigerant** gas leaving the evaporator decreases, the pressure in the remote bulb and power assembly also decreases and the combined evaporator and spring pressures cause the valve pin to move in the closing position.

As the operating superheat is raised, the evaporator capacity decreases, since more of the evaporator surface is required to produce the superheat necessary to open the valve. It is obvious, then, that it is most important to adjust the operating superheat correctly and that a minimum change in superheat to move the valve pin to full open position, is of vital importance because it provides savings in both initial evaporator cost of operation. Accurate and sensitive control of the refrigerant liquid flowing to the evaporator is necessary to provide maximum evaporator capacity under load conditions. The spring is adjusted to give 12 to 16° F (-11.1 to -8.8 ^{o} C) of superheat at the evaporator outlet.

This ensures that the refrigerant leaving the evaporator is in a completely gaseous state when drawn into the suction side of the compressor. Liquid would damage the compressor valve, piston and heads if allowed to return in the suction line.

A vapor is said to be superheated when its temperature is higher than the saturation temperature corresponding to its pressure. The amount of the superheat is, of course, the temperature increase above the saturation temperature at the existing pressure.

As the refrigerant moves along in the evaporator, the liquid boils off into a vapor and the amount of liquid decreases until all the liquid has evaporated due to the absorption of a quantity of heat from the surrounding atmosphere equal to the latent heat of vaporization of the refrigerant. The gas continues along in the evaporator and remains at the same pressure. However, its temperature increases due to the continued absorption of heat from the surrounding atmosphere. The degree to which the gas refrigerant is superheated is related to the amount of refrigerant being fed to the evaporator and the load to which the evaporator is exposed.

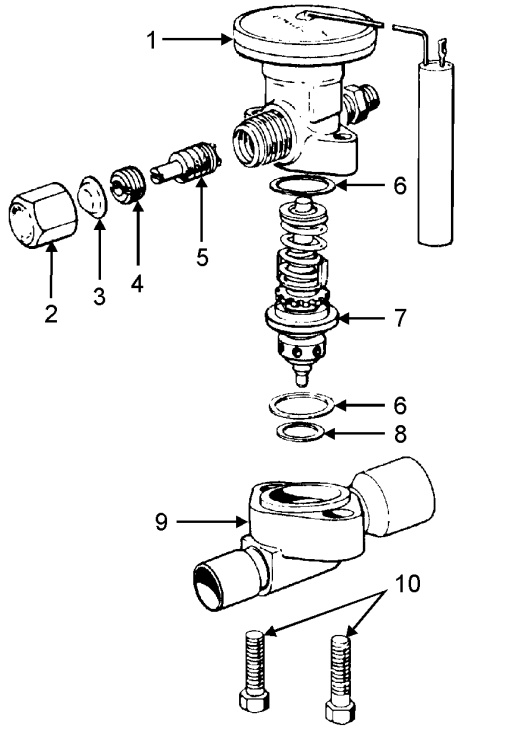

1. POWER ELEMENT
2. CAP - SEAL NUT
3. BONNET - SEAL (FLARE)
4. PACKING NUT
5. ADJUSTING STEM & PACKING ASSY
6. GASKET
7. CAGE ASSY
8. GASKET
9. BODY FLANGE
1O. CAPSCREW

FIGURE 31: EXPANSION VALVE 22045

Superheat Adjustment

The starting method of adjusting the superheat is to unscrew completely the main evaporator expansion valve adjusting screw, then screw in 13 turns clockwise for 134A (Fig. 32). Afterwards, the following procedure should be followed:

1. Operate coach for at least one-half hour at fast idle with temperature control set at 82°F (27,7^{o}C), Then set temperature to minimum to keep the compressor on 6 cylinders.

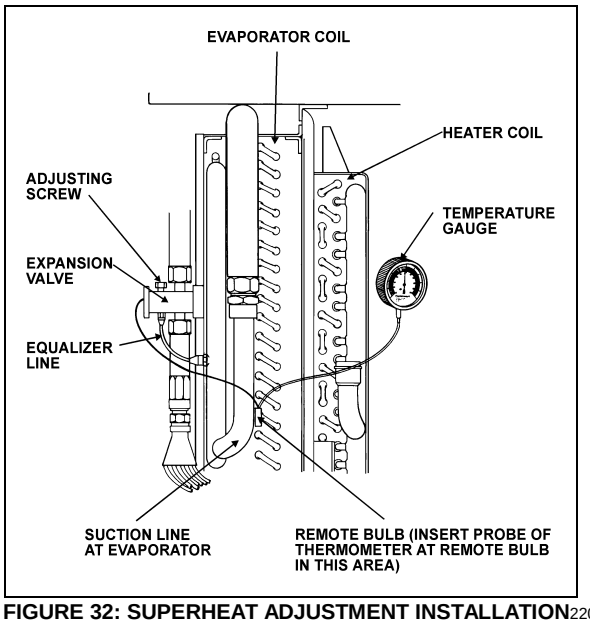

FIGURE 32: SUPERHEAT ADJUSTMENT INSTALLATION 22046

2. Install pressure gauge at the evaporator suction header. You may install the pressure gauge at compressor suction, but then add 3 psi to reading.
3. Install a remote reading thermometer to the evaporator outlet line near the existing remote bulb (Fig. 32).
4. Apply thermostatic tape around the bulb and evaporator outlet line to get a true reading of the line temperature.
5. Block condenser if necessary to keep pressure over 150 psi.
6. Check approximately 5 readings of pressure at 2-minute intervals and convert to temperature using the temperatures & pressures table (page 31). Likewise check the temperature reading at the remote bulb at the same 2-minute intervals and record the low and high swing readings of the needle (refer to Fig. 33).

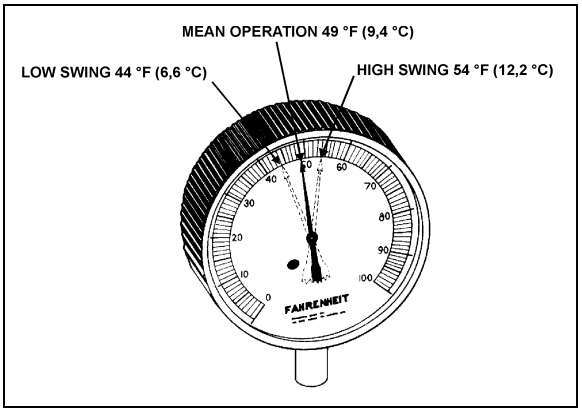

FIGURE 33: HIGH & LOW SWING TEMPERATURE AT REMOTE BULB 22047

Example of readings taken at fig. 33:

A/C pressure gauge converted to temperature at expansion valve fitting	Temperature on remote bulb	
40°F (4,4°C)	Low-swing 44°F (6,6°C)	High swing 54°F (12,2°C)
Formula for superheat 49°F-40°F=9°F (9,4°C-4,4°C = 5°C)	Average of low and high swing is 49°F (9,4°C)	

NOTE
The low swing of the superheat should be a minimum of 4°F (2,2°C) higher at the remote bulb and have an average of 8 to 12°F (4 to 6°C) higher range at the bulb than the fitting at the expansion valve.

NOTE
To reduce the superheat, flow of refrigerant is increased by turning adjusting screw of expansion valve lower evaporator temperature counterclockwise. To increase temperature or increase superheat, flow of refrigerant is reduced by turning adjustment screw of expansion valve clockwise.

6. Regulate suction pressure to temperature reading according to temperature chart or to the R-134a temperature scale on the pressure gauge.

Example: Suction pressure 30 psi (207 kPa) converted to 32°F (0°C) on chart. If temperature reading is 40°F (4,4°C), subtract 32°F (0°C) and the result will be 8°F (4,4°C) of superheat.

⚠ CAUTION ⚠

Before proceeding to the expansion valve adjustment, check for restriction on suction side for plugged filter dryer and partially open valves. These conditions will give a high superheat.

Maintenance

1. Pump down the system as previously indicated in this section.
2. Disconnect the external equalizer line from the under side of the power head, and unclamp the remote control bulb from the evaporator coil outlet line.
3. Remove the two cap screws holding the power assembly to the valve body flange. Lift off the power assembly and remove the cage assembly.
4. When reassembling, replace with the new gaskets in proper location. Make sure the two lugs on the cage assembly fit into grooves provided in the power assembly. Do not force the valves together. The cage must fit properly before tightening the body flange. Tighten bolts evenly.
5. Check for leaks.

Safety Instructions

1. Make sure the valve is installed with the flow arrow on the valve body corresponding to the flow direction through the piping system.
2. Before opening any system, make sure the pressure in the system is brought to and remains at the atmospheric pressure. Failure to comply may result in system damage and/or personal injury.

8.7.2 Driver's System

The function and operation of the expansion valve for the driver'' system are similar to the main system, but no superheat adjustment is required (see figures 19 and 20).

8.8 TORCH BRAZING

Use an electrode containing 35% silver.

⚠ CAUTION ⚠

When using heat near a valve, wrap with a water saturated rag to prevent overheating of vital parts.

⚠ WARNING ⚠

Before welding any part of refrigeration system, make sure the area is well ventilated.

8.9 TROUBLESHOOTING

8.9.1 Expansion Valve

PROBABLE CAUSE	PROBABLE REMEDY
LOW SUCTION PRESSURE-HIGH SUPERHEAT	
EXPANSION VALVE LIMITING FLOW:	
Gas in liquid line due to pressure drop in the line or insufficient refrigerant charge.	Locate cause of line flash and correct by use of any of the following methods. Add R-134a. Replace or clean filter dryer.
Inlet pressure too low from excessive low condensing temperature. Resulting pressure difference across valve too small.	Increase head pressure. Verify pressure switch for fan speed control.
Superheat adjustment too high.	Adjust superheat as outlined under "Superheat Adjustment".
Power assembly failure or partial loss of charge.	Replace power assembly or replace valve.
Air filter screen clogged.	Clean or replace air filter screen.
Plugged lines.	Clean, repair or replace lines.
LOW SUCTION PRESSURE-LOW SUPERHEAT	
Uneven or inadequate evaporator loading due to poor air distribution or liquid flow.	Balance evaporator load distribution by providing correct air or liquid distribution.
HIGH SUCTION PRESSURE-HIGH SUPERHEAT	
Compressor discharge valve leaking.	Replace or repair valve.
HIGH SUCTION PRESSURE-LOW SUPERHEAT (DEFECTIVE UNLOADER)	
Valve superheat setting too low.	Adjust superheat as outlined under "Superheat Adjustment".
Compressor discharge valves leaking.	Replace or repair discharge valve.
Incorrect superheat adjustment.	Superheat adjustment 12 to 16°F.
FLUCTUATING DISCHARGE PRESSURE	
Insufficient charge.	Add R-134a to system.

PROBABLE CAUSE	PROBABLE REMEDY
HIGH DISCHARGE PRESSURE	
Air or non-condensable gases in condenser.	Purge and recharge system.
Overcharge or refrigerant.	Bleed to proper charge.
Condenser dirty.	Clean condenser.

8.9.2 A/C

TROUBLE	CAUSE
Low suction pressure and frosting at dryer outlet.	Clogged filter.
Low Oil Level.	Check for oil leaks and for leaking oil seal. Do not attempt to check oil level unless system has been stabilized at least 20 minutes. See oil level verification.
Excessively cold suction line.	Loss of contact between the expansion valve bulb and the suction line or sticking of the expansion valve. Check for foreign matter and clean, repair or replace the valve.
Excessively cold suction line and noisy compressor.	Check superheat adjustment. Check remote bulb contact. Check expansion valve for sticking.
Compressor squeaks or squeals when running.	Check oil level. Replace oil seal.
Noisy or knocking compressor.	Check for broken internal parts. Overhaul if required.
Compressor vibrates.	Check and tighten compressor mounting bolts and belt tension.
Low refrigerant level	Check for refrigerant leaks and add refrigerant if required.
Suction pressure rises faster than 5 pounds per minute after shutdown.	Check compressor valve for breakage or damage.
Insufficient cooling.	Check for refrigerant leaks. Check condition of air filter and motors.
Insufficient air flow.	Dirty or iced evaporator. Dirty air filter. Blowers inactive. Clogged ducts.
No flow of refrigerant through expansion valve.	Filter dryer is clogged. Remote bulb has lost charge or expansion valve is defective.
Expansion valve hisses. Bubbles in moisture and liquid indicator.	Gas in liquid line. Add refrigerant.
Loss of capacity	Clogged filter. Obstructed or defective expansion valve.
Superheat too high.	Reset superheat adjustment. Check for clogged external equalizer line, or filter dryer.
Reduced air flow: a. Dirty or clogged air filter; b. Evaporator motor inoperative; or c. Plugged return air ducts.	Dirty or iced evaporator coil. Clean air filter screen. Check return ducts for obstructions. Check blower motor.

TROUBLE	CAUSE
Frequent starting and stopping on low pressure control switch.	Lack of refrigerant. Check for leaks. Recharge.
Compressor intermittently starts and stops.	Intermittent contact in electrical control circuit. Compressor valves not in operating position.
Non-condensable in the refrigeration system.	Leak on system, system in vacuum in low temp. Specific symptom, pressure in system will not correspond to ambient temperature on shutdown. Only non-condensable will cause this. (Example: Pressure of idle R-134a system in 80°F (26.6°C) room should be 86.4 psi (595.7 kPa). See temperature chart in this section.) An evaporator just does a proper cooling job without sufficient air. Shortage of air can be caused by the following: * Dirty filters; or * Dirty coils.

Testing condenser pressure.

Note: R-134A pressure is function of the temperature variation.

Example, for an exterior temperature of 100°F.
Exterior temperature (100°F) + 30°F = 130°F. Refer to paragraph "10.11 Temperature & Pressure".
Note the corresponding pressure for a temperature of 130°F, 199.8 psi.
Read the condenser pressure, example 171.9 psi.
171.9 psi & 199.8 psi, the pressure in the condenser is inferior to the pressure corresponding to the exterior temperature, in this case the condenser pressure may be too low. Check for refrigerant leaks and add refrigerant if necessary. If the pressure corresponding to the condenser temperature is superior to the pressure corresponding to the exterior temperature, then the air cooled condenser pressure may be too high. Most frequent causes are:

Reduced air quantity. This may be due to:
* Non-condensable in system;
* Dirt on the coil;
* Restricted air inlet or outlet;
* Dirty fan blades;
* Incorrect rotation of fan;
* Fan speed too low;
* Fan motor going out on overload; or
* Prevailing winds.
* Too much refrigerant in system. Remove refrigerant if necessary.

8.10 TEMPERATURES & PRESSURES

VAPOR-PRESSURE			
TEMPERATURE		**PRESSURE**	
°F	**°C**	**psi**	**kPa**
-100	-73.3	27.8	191.7
-90	-67.8	26.9	185.5
-80	-62.2	25.6	176.5
-70	-56.7	23.8	164.1
-60	-51.1	21.5	148.2
-50	-45.6	18.5	127.6
-40	-40.0	14.7	101.4
-30	-34.4	9.8	67.6
-20	-29	3.8	26.2
-10	-23	1.8	12.4
0	-18	6.3	43.4
10	-12	11.6	80
20	-7	18.0	124.1
30	-1	25.6	176.5
40	4	34.5	237.9
50	10	44.9	309.6
60	16	56.9	392.3
70	21.1	70.7	487.5
80	27	86.4	595.7
90	32.2	104.2	718.5
100	38	124.3	857.0
110	43.3	146.8	1012.2
120	49	171.9	1185.3
130	54.4	199.8	1377.6
140	60	230.5	1589.3
150	65.6	264.4	1823.0
160	71	301.5	2078.8
170	76.7	342.0	2358.1

VAPOR-PRESSURE			
TEMPERATURE		PRESSURE	
°F	°C	psi	kPa
180	82.2	385.9	2660.8
190	87.8	433.6	2989.7
200	93.3	485.0	3344.1
210	98.9	540.3	3725.4

8.11 LEAK TESTING

Some methods such as nitrogen pressure and soap, and electronic sniffer can be used for leak testing. However, the most common method used is a "Halide" torch consisting of an acetylene tank, a burner and a suction test hose. Proceed as follows:

⚠ WARNING ⚠

Do not inhale fumes from leak detector.

The flow of acetylene to the burner causes suction in the test line. Any gas refrigerant present will be drawn through the hose and into the burner where it decomposes into free acids.

These acids come in contact with the hot copper reaction plate in the burner, causing color reaction in the flame. A small concentration is indicated by a green tint and a large concentration by an intense blue. Do not confuse this change in color with the change caused by shutting off the air supply through the hose by holding the end too close to an object.

The procedure for testing is:

1. Adjust flame so that the top of the cone is approximately level or within one-half inch above the plate.
2. Probe end of suction test tube around all joints, valves, etc. When a leak has been found at a soldered joint, this section of the system must be pumped down. Do not solder as pressure will force hot solder out. If the system is empty, it is more economical to put in just enough R-134a to produce about 15 psi (103 kPa). The pressure can be raised to about 150 psi (1034 kPa) with dry nitrogen.

NOTE

This gas is put into the suction and discharge shutoff valves at the compressor. The receiver valves must be opened. If no leaks are found, dump this mixture, evacuate the system and fill with refrigerant.

9. AUXILIARY AIR CONDITIONING SYSTEM AND COMPONENTS

9.1 COMPRESSOR

MODEL	TM-16HD
TYPE	Swash-plate type
Number of cylinders	6
Bore	36 mm (1.42”)
Stroke	26.7 mm (1.05”)
Displacement	163 cm³ (10cu.in)
Permissible speed	700-6000 rpm
Refrigerant	HFC-134a
Lubricant	ZXL100PG
	180 cm³
Mass	4.9 kg (10.9 lbs)

9.2 MAGNETIC CLUTCH

TYPE	Electromagnetic single-plate dry clutch
Rated Voltage	24 volts DC
Current consumption	3.75 amperes (max)
Stalling torque	49 Nm (36.1 Lbf-ft) min.
Rotation	CW/CCW
Mass	2.2 kg (4.9 lbs)

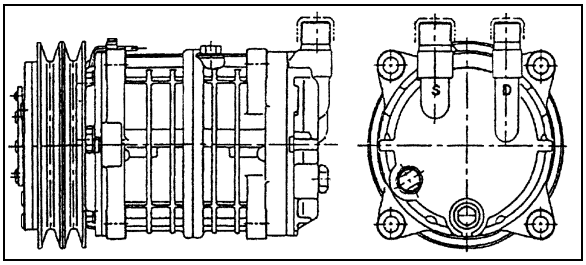

FIGURE 34: SELTEC TM-16HD COMPRESSOR

9.3 MAINTENANCE PRECAUTIONS

9.3.1 Work Area

Because the components of air conditioning systems are especially sensitive to moisture, dirt and dust, always observe the following procedures:

* Work indoors whenever possible.
* Select a level work area.
* Keep work area clean.
* Select a work area with adequate ventilation.

⚠ WARNING ⚠

Refrigerant itself is not harmful, but excessive accumulation in a closed area can cause oxygen deficiency.

* Keep open flame and flammables away from the vehicle in which the air conditioning system is being serviced. **Open flame is especially dangerous during Freon leak testing.**

⚠ WARNING ⚠

Contact with flame and high temperatures can generate toxic gases.

9.3.2 Refrigerant Handling

Never directly heat refrigerant cylinder or put in hot water heated above 40°C (104°F) since it may cause release of the safety plug or the cylinder may burst. When it is necessary to heat refrigerant cylinder for charging in cold weather, use warm water at a temperature below 40°C (104°F).

⚠ WARNING ⚠

Do not put the charge valve in the warm water.

* Never store refrigerant cylinder in direct sunlight, near flame, or where the temperature exceeds 40°C (104°F). Always store refrigerant cylinder in a cool dry place.
* Never throw or strike refrigerant cylinder and never handle roughly.

9.3.3 PAG Oil Handling

Whenever a part replacement has to be done on the system, additional task about PAG oil will have to be performed.

The compressor has little reserve and is lubricated by the oil refrigerant mixture. To perform correctly, the compressor needs the mixture to be from 3% to 6% of Poly Alkaline Glycol (PAG) oil.

When a compressor has to be top off due to a severe lost, the amount of oil to be added should be evaluated with the refrigerant charge or a compressor oil change should be performed to rise up the compressor oil charge to 180 ml or the written charge on the nameplate.

* The oil should be free from moisture, dust, metal shavings, etc.
* Do not mix with other oils.
* The moisture content of the oil increases when exposed to the air for prolonged period. Therefore, after use, seal the container immediately.

DO NOT MIX PAG AND POE OR MINERAL OILS!

9.3.4 Refrigerant Recovery

Some air conditioning system refrigerant compounds are chlorofluorocarbons, and therefore may be damaging the earth's ozone layer. Consequently, the release of refrigerant into the atmosphere must be avoided. Whenever refrigerant is to be released from the air conditioning system, a refrigerant recovery unit must be used to recover the refrigerant. This refrigerant can then be recycled and reused, which is both environmentally safe and economical.

For complete system recovery, any of the High and Low service ports can be used (Refer to fig. 19 & 20). Energize liquid solenoid valve and measure the quantity of oil recovered. For the compressor only, use the service valve port and

close the valves. The service valves open permits full flow of refrigerant to service port. Service valve closed permits flow of refrigerant from compressor to service port.

9.3.5 Compressor Handling

Do not strike, drop or turn the compressor upside down. If the compressor is knocked over or turned upside down, rotate the compressor's magnetic clutch 5 to 6 times by hand to circulate the oil which has settled in the cylinder. Sudden rotation with oil in the cylinder can cause valve damage and adversely affect durability.

9.4 COMPRESSOR REMOVAL

9.4.1 When the compressor is operational

* Perform the "OIL RETURN OPERATION" (Refer to paragraph 10.9).

9.4.2 When the compressor is inoperable

* Perform the "Refrigerant Recovery" operation (Refer to paragraph 10.3.4).
* Slacken bolts A (Refer to figure 35).
* Remove bolts B & C (Refer to figure 35).
* Remove the compressor.

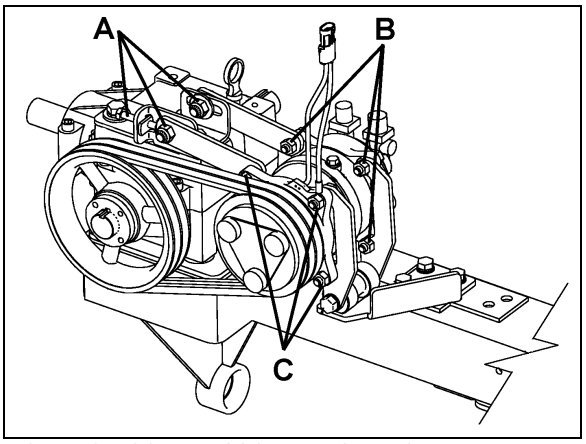

FIGURE 35: COMPRESSOR REMOVAL OR INSTALLATION 22285

9.5 INSTALLATION PRECAUTIONS

The new compressor is filled with the specified quantity of compressor oil and nitrogen gas (N^2). When mounting the compressor on the vehicle, take the following steps:

* Loosen the discharge side connector's cap and gently release N^2 from compressor (Refer to figure 36).

NOTE
Take care not to let the oil escape.

* Slowly rotate the compressor's magnetic clutch several times by hand to distribute the oil which has settled in the cylinders (Refer to figure 37).

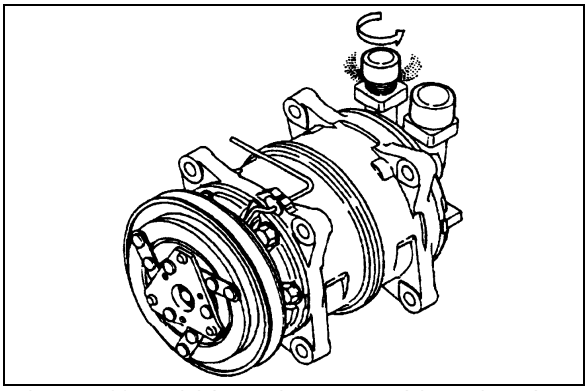

FIGURE 36: LOOSENING THE DISCHARGE SIDE CONNECTOR'S CAP

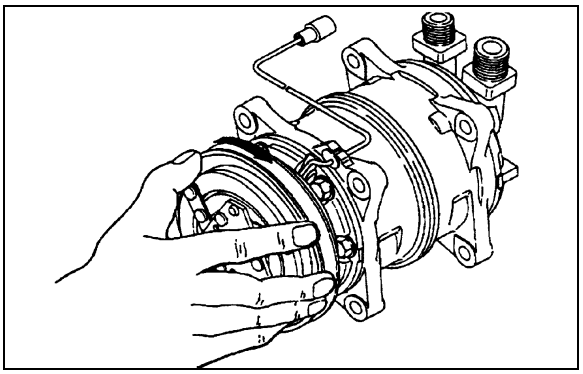

FIGURE 37: ROTATING MAGNETIC CLUTCH

* When using the old compressor in the system, the compressor should be installed after changing the oil.

9.6 COMPRESSOR OIL CHANGE

Each compressor is delivered filled with the specified quantity of compressor oil, depending on the type of air conditioning system. A label describing the amount/type of compressor oil is attached to the compressor.

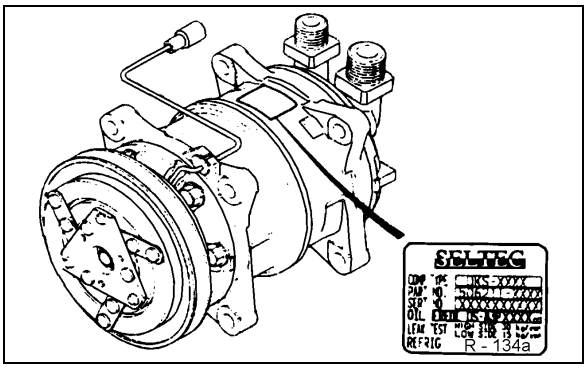

FIGURE 38: COMPRESSOR OIL LABEL

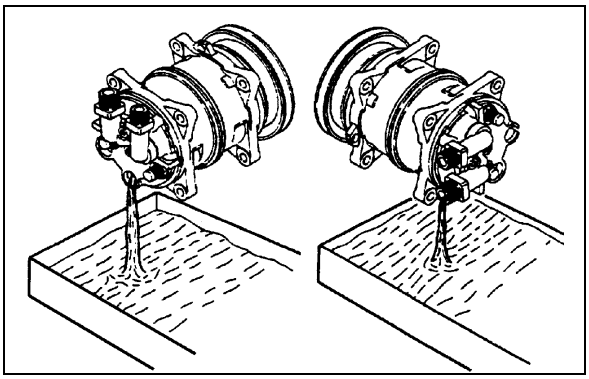

FIGURE 39: DRAINING THE OIL

* Check oil for contamination. Refer to PARAGRAPH 10.8: "COMPRESSOR OIL CONTAMINATION".
* Tighten the oil drain plug with a new o-ring lightly coated with clean compressor oil to specified torque.

Torque: 13-15 Nm (9.4-10.8 Lbf-ft)

* Add new compressor oil through the suction-side connector with the amount specified on the label (180 ml).

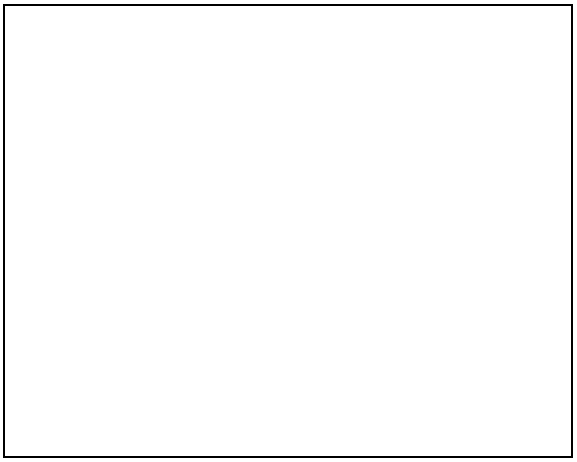

FIGURE 40: ADDING NEW COMPRESSOR OIL

9.6.1 Evacuating System Before Adding Refrigerant (Driver's or Auxiliary System)

When a system has been opened for repairs, change the filter dryer and evacuate the system. XL2-45 coaches equipped with an auxiliary system or XL2 MTH equipped with a driver's system must use high-pressure service port located on the other side of check valve and low-pressure port located alongside rear truss. (Figs. 19 and 20). It would be good practice to open solenoid valve.

1. Connect two hoses equipped with a micron gauge between the high-pressure service port, the low-pressure service port and the vacuum pump.
2. With the unit service valves open and the vacuum pump valves open, start the pump and draw the manifold and hoses into a very deep vacuum (700 microns).
3. Close manifold valve
4. Shut down the vacuum pump.
5. Check to insure that vacuum holds. (If the pressure continues to rise, it indicates a leak or moisture in the system).
6. Charge the system with the proper amount of refrigerant through the service port near the check valve using recommended charging procedures.
7. Remove the hoses.

9.7 OIL ADDITION

The chart below shows the approximate amount of oil to be added to the system when replacing a component.

Component replaced	Typical amount of oil
Evaporator	50 cm^3 (1.7 ozs)
Condenser	30 cm^3 (1.0 ozs)
Filter-Dryer	10 cm^3 (0.3 ozs)

The amount of oil recovered with the refrigerant recovery should be added at the same time.

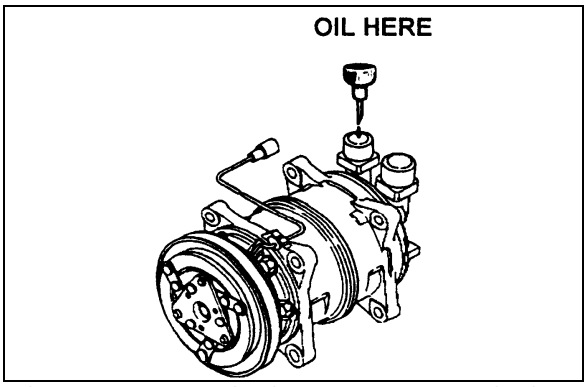

FIGURE 41: ADDING OIL AFTER REPLACING A COMPONENT

9.8 COMPRESSOR OIL CONTAMINATION

Unlike engine oil, no cleaning agent is added to the compressor oil. Even if the compressor is run for a long time, the oil never becomes turbid as long as there is nothing wrong with the compressor or its method of use. Inspect the extracted oil for any of the following conditions:

* Dirt in the oil.
* Change to a varnish color.
* Presence of foreign substance, metal shavings, etc. in the oil. When the oil extracted from the compressor is as described above, replace the oil as follows:
  1. Clean the interior of the system with approved method.
  2. Replace the filter-dryer.
  3. Supply with new oil as specified in paragraph 10.6: “COMPRESSOR OIL CHANGE”.

9.9 OIL RETURN OPERATION

There is a close affinity between oil and refrigerant. During normal operation, part of the oil recirculates with the refrigerant in the system. Therefore, when checking the amount of oil in the system or replacing any system component, the compressor must be run in advance to ensure return. This procedure is as follows:

* If the amount of refrigerant in the system has decreased, charge to the proper amount.
* Start the engine and select fast idle.
* Set the fan speed to full air/full A/C and let run for 20 minutes.

9.10 OIL CHECK INTERVAL

Unlike engine oil, it is not necessary to frequently check or change the compressor oil. However, it is necessary to check and replenish or replace the compressor oil in the following cases:

* Whenever the compressor, evaporator, condenser or filter-dryer is replaced.
* Whenever refrigerant has leaked from the system, evaluate the amount of oily spot.
* Whenever refrigerant is suddenly released from the cooling cycle, replenish the compressor (180 ml) plus 150 ml.
* Whenever any oil-related problems occur in the cooling cycle.

9.11 LEAK TEST PROCEDURE WITH COMPRESSOR REMOVED

When a compressor is repaired, it must be checked prior to installation.

* Install the discharge and suction caps to the connector.

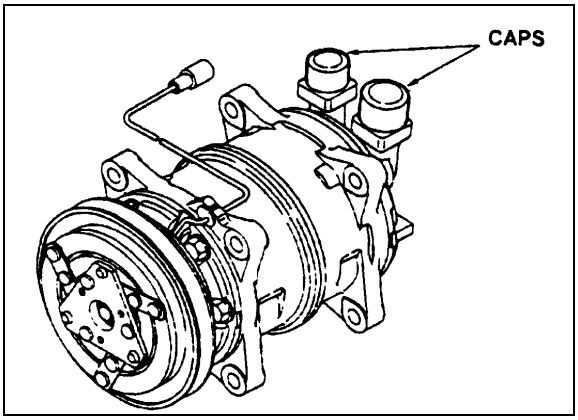

FIGURE 42: DISCHARGE AND SUCTION CAPS

* Fill the compressor with refrigerant through connector’s suction port raising the pressure to at least 0.5 Mpa (70 psi).
* Check the compressor for leaks using a leak detector.

NOTE
Never leave the compressor upside down for longer than 30 seconds. This is because the oil inside the compressor will enter the cylinders, causing liquid compression which will damage the compressor’s suction and delivery valves.

9.12 TIGHTENING TORQUES

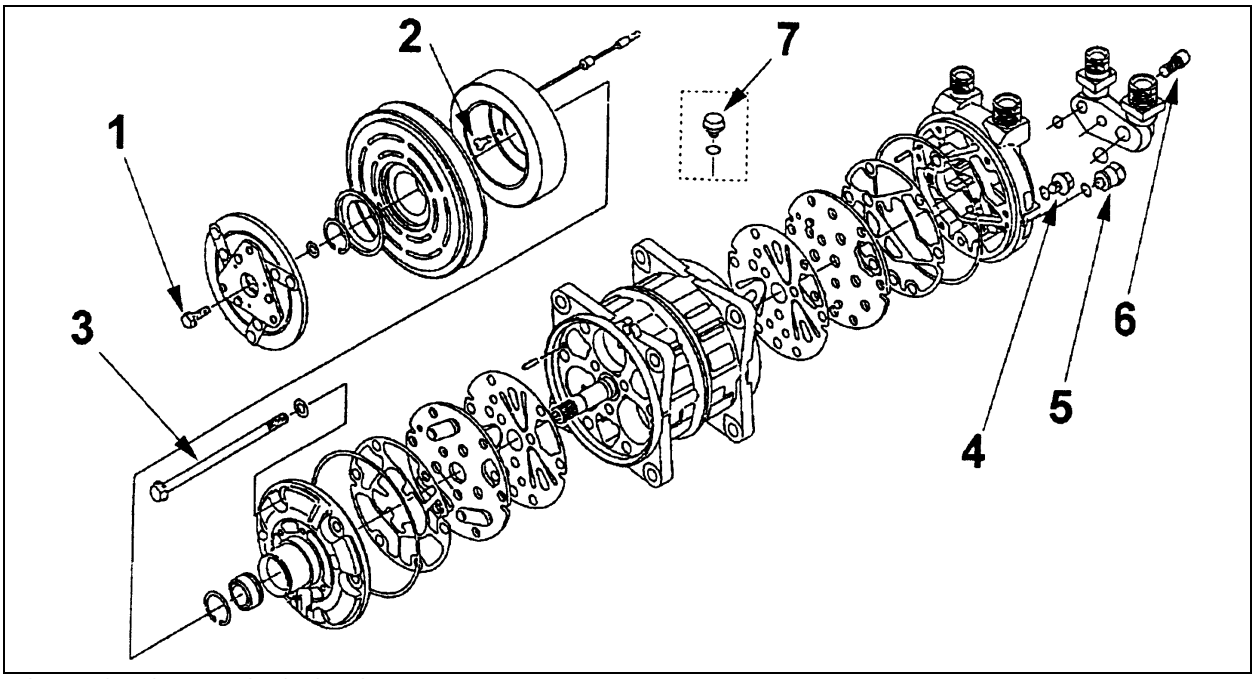

FIGURE 43: TIGHTENING TORQUES

PART	THREAD SIZE	TIGHTENING TORQUE
1. Bolt Armature	M6 x 1.0	12 - 14 Nm (8.7 - 10.1 Lbf-Ft)
2. Field Coil Screw	M5 x 0.8	4 - 6 Nm (2.9 - 4.3 Lbf-Ft)
3. Body Bolt	M8 x 1.25	20 – 24 Nm (14.5 – 17.3 Lbf-Ft)
4. Oil Drain Plug	M8 x 1.25	13 – 15 Nm (9.4 – 10.8 Lbf-Ft)
5. Pressure Relief Valve	3/8 – 24UNF	13 – 15 Nm (9.4 – 10.8 Lbf-Ft)
6. Connector Bolt	M8 x 1.25	20 – 24 Nm (14.5 – 17.3 Lbf-Ft)
7. Oil Filler Plug	M8 x 1.25	13 – 15 Nm (9.4 – 10.8 Lbf-Ft)

10. HEATING SYSTEM

The schematics of Figures 44 and 45 show respectively, the central heating system and the driver's heating system with their components.

In addition to the normal heating provided by the engine, a preheating system (104,000 Btu/hr) (optional on coaches only) may have been installed in the vehicle.

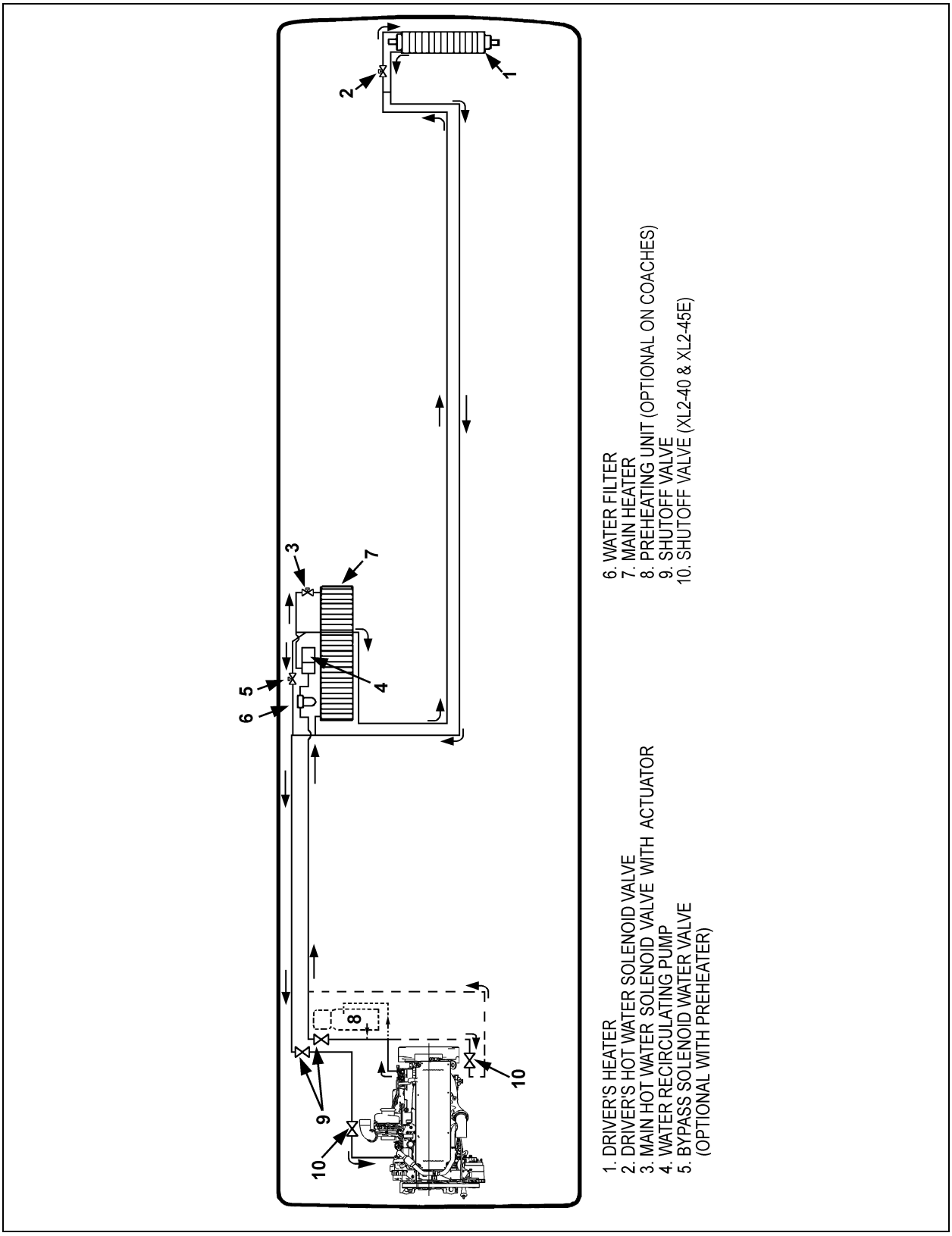

FIGURE 44: CENTRAL HEATING SYSTEM COMPONENTS 22237

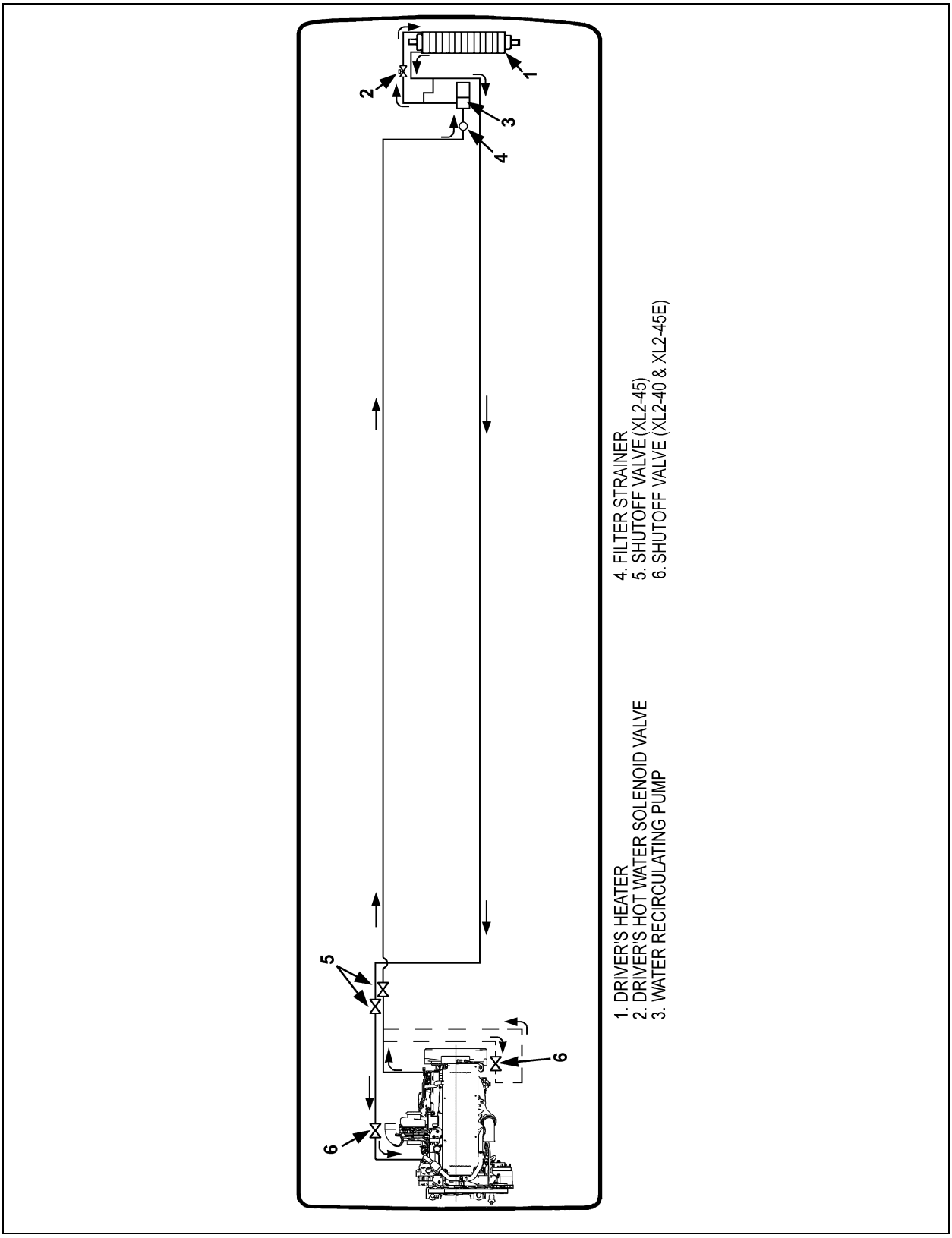

FIGURE 45: DRIVER'S HEATING SYSTEM COMPONENTS (VEHICLES EQUIPPED WITH DRIVER'S SYSTEM ONLY) 22238

10.1 DRAINING HEATING SYSTEM

To drain the entire system, refer to Section 05, "*Cooling*". If only the driver's or main heater core must be drained, refer to the following instructions.

10.1.1 Draining Driver's Heater Core

1. Stop engine and allow engine coolant to cool.
2. Locate the normally open water solenoid valve on the ceiling of the spare wheel compartment (Fig. 46), disconnect its wiring connector, then connect a 24-volt external power source, using jumper cables, to close valve.

⚠ WARNING ⚠

Before proceeding with the following steps, check that coolant has cooled down.

3. Loosen hose clamp, install an appropriate container to recover coolant, and disconnect silicone hose from water solenoid valve.
4. From inside of vehicle, remove the two finishing panels in front of unit. Remove the three screws fixing the unit front panel. Open the manual vent located inside the HVAC unit, on the driver's side (Fig. 47) to ensure an efficient draining.

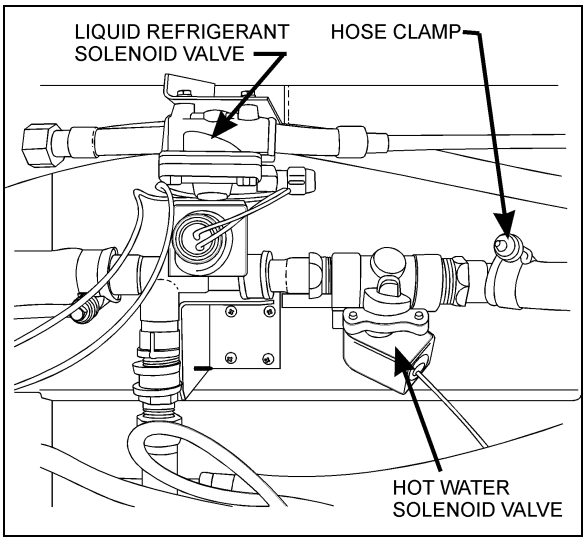

FIGURE 46: CEILING OF THE SPARE WHEEL COMPARTMENT 22181

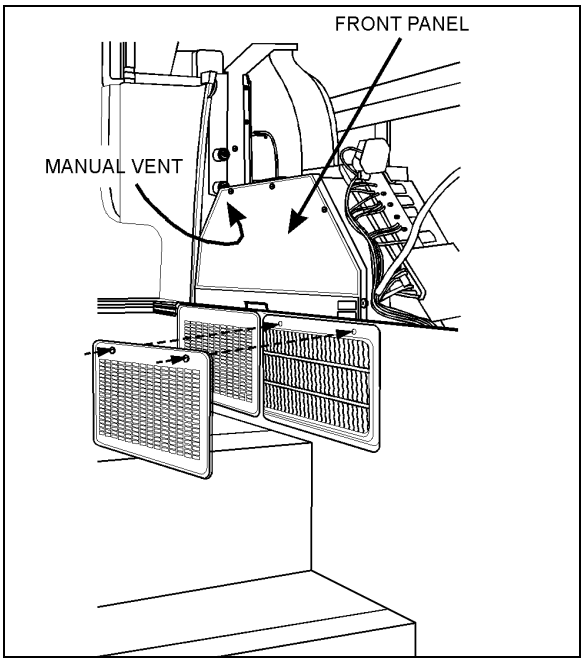

FIGURE 47: DRIVER'S HVAC UNIT 22172

10.1.2 Draining Main Heater Core

1. Stop engine and allow engine coolant to cool.
2. Close both heater line shutoff valves.

On XL2-40 & 45E vehicles, the valves are located in engine compartment. One is on the R.H. side of compartment and is accessible through engine compartment R.H. side door (Fig. 48).

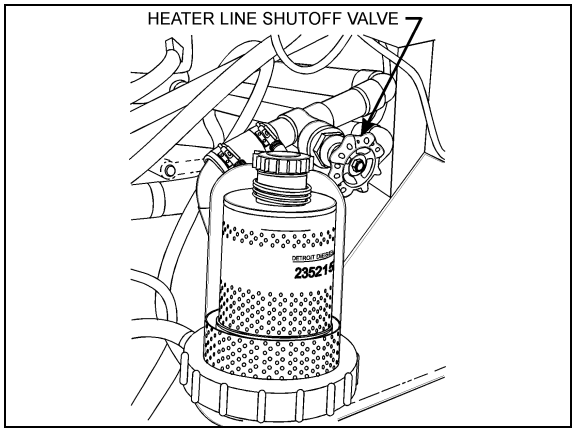

FIGURE 48: HEATER LINE SHUTOFF VALVE 05070

Another valve is located in the engine compartment under the radiator fan gearbox (Fig. 49).

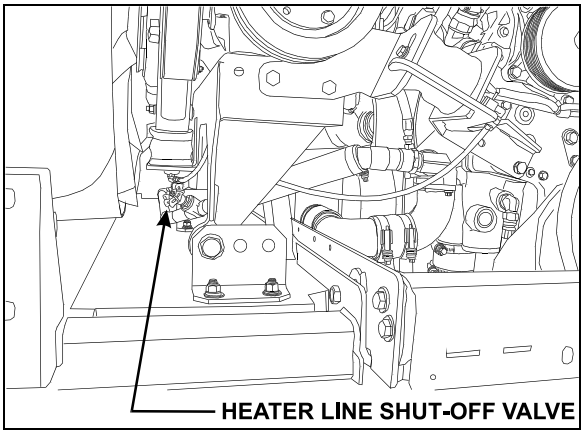

FIGURE 49: ENGINE COMPARTMENT 05078

On XL2-45 vehicles, one valve is located in the engine compartment, under the radiator fan gearbox (Fig. 49), another valve is located in the engine compartment behind splash guard panel at rear of vehicle (behind L.H. side tag axle wheel) (Fig. 50).

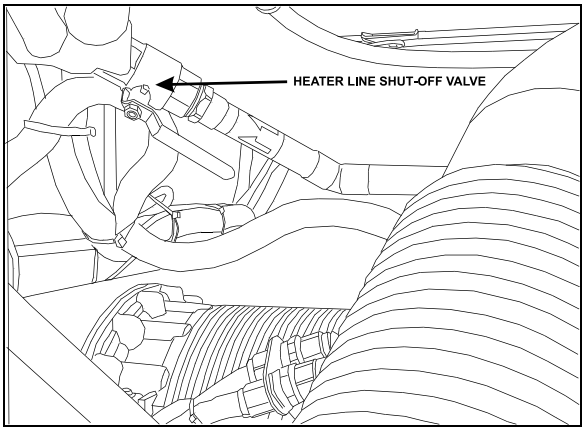

FIGURE 50: HEATER LINE SHUT-OFF VALVES 05067

3. Open the last L.H. side baggage compartment door, and then pull the black release button located on the L.H. side in order to unlock and open the evaporator compartment door.

⚠ WARNING ⚠

Before proceeding with the following step, check that coolant has cooled down.

4. Open drain cock in bottom of heater core, then open manual vent located on top of heater core (Fig. 51) in order to allow air to enter while draining.

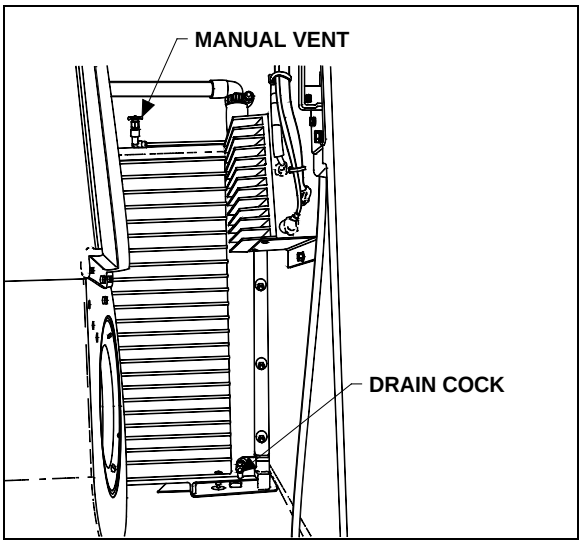

FIGURE 51: EVAPORATOR COMPARTMENT 22128

10.2 FILLING HEATING SYSTEM

1. Ensure that the drain hose is reconnected and the manual vents and drain cock are closed.
2. Open the surge tank filler cap and slowly fill the system to level of filler neck.
3. After initial filling, the water valves should be open and the water recirculating pump should be energized to assist in circulating coolant through the heating system. To perform this operation, start the engine, switch on the HVAC control unit, both driver and passenger sections, and set temperature to their maximum positions in order to request the heating mode in each of these sections.
4. When coolant level drops below the surge tank filler neck, slowly fill the system to level of filler neck.
5. Once the level has been stabilized, replace cap.

10.3 BLEEDING HEATING SYSTEM

Whenever the heating system has been drained and refilled, or the system has run low on coolant and coolant has been added, it is necessary to bleed air from heating system. Locate the manual vents illustrated in Figures 47 and 51, and open them momentarily until no air escapes from the lines.

10.4 SOLDERING

Before soldering any part of the system, make sure the area is well ventilated. Use (stay clean) flux sparingly and apply solder (95-5 round wire 1/8 inch [3,1 mm]). After completing repairs, test for leaks.

When using heat at or near a valve, wrap with a water saturated rag to prevent overheating of vital parts.

10.5 DRIVER'S WATER SOLENOID VALVE

A two-way normally open, internal pilot-operated solenoid valve designed for smooth closing is used to control the coolant flow through the driver's heating unit. It is mounted on the coolant inlet line of the driver's heating unit, and is accessible through the spare wheel compartment (see fig. 46). The valve cannot be manually bypassed.

10.5.1 Improper Operation

1. Faulty control circuit: Check the electric system by energizing the solenoid. A metallic clicking noise indicates that the solenoid is operating. Absence of clicking indicates a loss of power or a defective solenoid. Check for open breaker, open-circuited or grounded coil, broken lead wires.
2. Burned-out coil: Check for open-circuited coil. Replace coil if necessary.
3. Low voltage: Check voltage across the coil leads. Voltage must be at least 85% of nameplate rating.
4. Excessive leakage: Disassemble valve and clean all parts. Replace worn or damaged parts with a complete spare part kit for best results.

10.5.2 Coil Replacement

Turn off electrical power supply and disconnect lead wires. Proceed in the following manner:

1. Remove retaining cap or clip, spacer, name plate and housing.
2. Slip spring washer, insulating washer, coil and insulating washer off the solenoid base sub-assembly. Insulating washers are omitted when a molded coil is used.
3. Coil is now accessible for replacement. Reassemble by reversing sequence of disassembly. Refer to exploded view (Fig. 52) for identification and location of parts.

NOTE
Solenoid must be completely reassembled, as the housing and internal parts complete the magnetic circuit.

⚠ CAUTION ⚠
When metal retaining clip disengages, it springs upwards.

10.5.3 Valve Disassembly

1. Drain driver's heating unit as previously explained in this section under paragraph *"Draining Heating System".*
2. Disconnect connector from coil connector.
3. Disassemble valve in an orderly fashion paying careful attention to exploded view (Fig. 52) provided for identification of parts.
4. Remove retaining cap and slip the entire solenoid enclosure off the solenoid base subassembly.

⚠ CAUTION ⚠
When metal retaining clip disengages, it springs upwards.

5. Unscrew solenoid base sub-assembly and remove core, plug nut gasket, plug nut assembly and solenoid base gasket.
6. Remove the four bonnet screws and valve bonnet, disc holder subassembly, disc holder spring, diaphragm/spring subassembly and body gasket.
7. All parts are now accessible for cleaning or replacement. Replace worn or damaged parts with a complete spare part kit for best results.

⚠ CAUTION ⚠
Do not damage valve seat in any manner, as its sealing feature will be affected, thus resulting in continuous leakage.

10.5.4 Valve Reassembly

1. Reassemble in reverse order of disassembly, paying careful attention to exploded view provided for identification and placement of parts (Fig. 52).
2. Replace body gasket and diaphragm/spring subassembly. Locate bleed hole in diaphragm/spring subassembly, approximately 45° from valve outlet.
3. Replace disc holder spring and holder subassembly.
4. Replace valve bonnet screws. Torque bonnet screws in a criss-cross manner to 95 ± 10 Lbf-inch.
5. Install solenoid base gasket, plugnut assembly and plugnut gasket. Position core (small end up for A-C construction) on plugnut assembly. For D-C construction, be sure plugnut assembly and core are installed with mated ends together.
6. Replace solenoid base subassembly and torque to 175 ± 25 Lbf-inch.
7. Refill heating system as previously stated under paragraph *"Filling Heating System*", then bleed air from the driver's heating unit as stated previously under paragraph *"Bleeding heating system".*
8. After maintenance, operate the valve a few times to be sure of proper opening and closing.

NOTE
Should diaphragm/spring subassembly become disassembled, be sure to replace the diaphragm/spring support with lip facing upward towards the valve bonnet

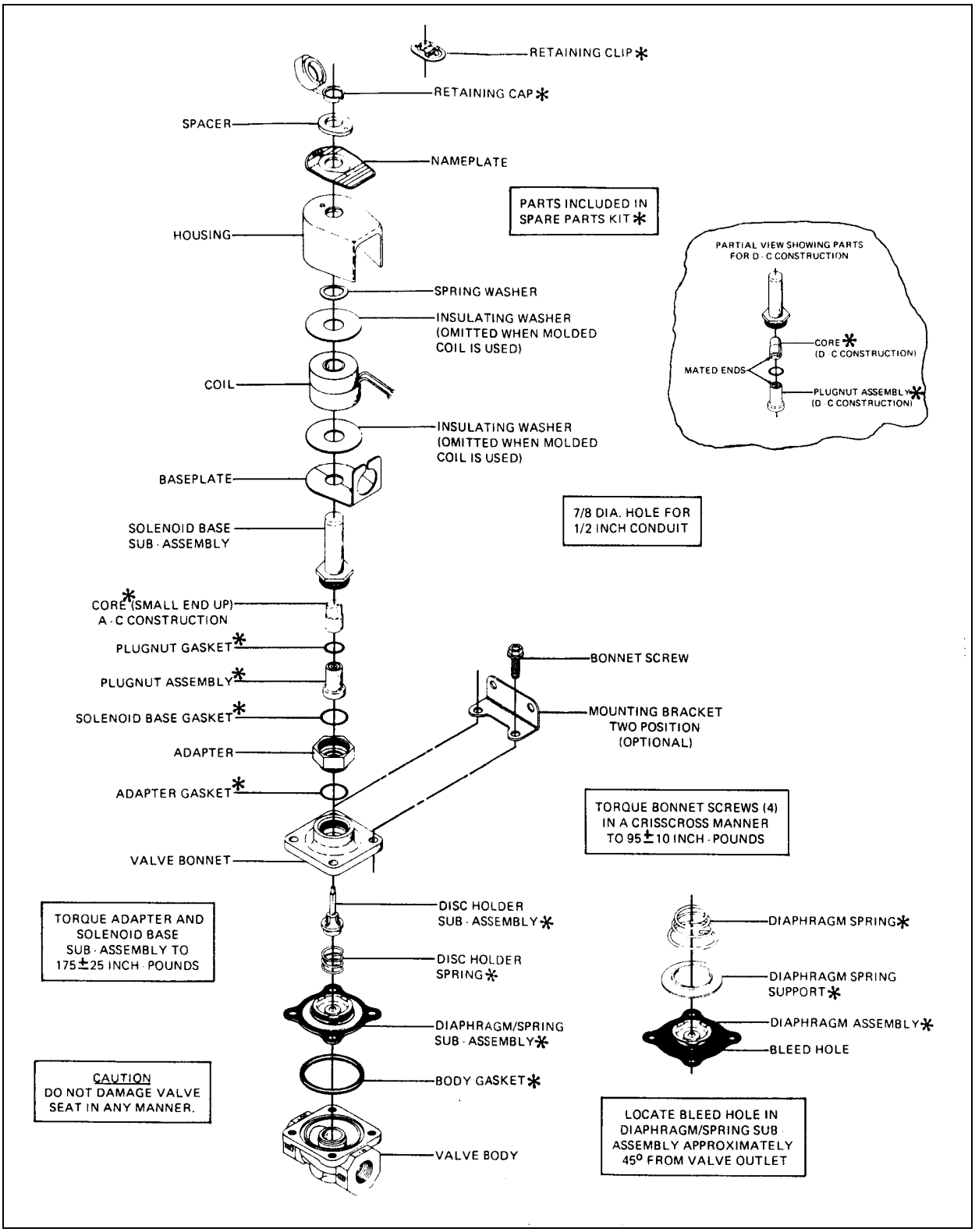

FIGURE 52: DRIVER'S WATER SOLENOID VALVE 22052

10.6 CENTRAL HOT WATER PNEUMATIC VALVE ASSEMBLY

10.6.1 Description

The flow of hot water to the vehicle's central heater core is controlled by a pneumatic NO water valve assembly. The valve, located in the evaporator compartment, is designed so that the pilot solenoid valve, which is part of the assembly, opens and closes a port which directs air pressure to the actuator casing, thereby opening or closing the valve.

When the vehicle is operating with no current to the pilot solenoid valve, no air pressure is admitted to the actuator casing, the cylinder spring pushes up against the cylinder, thereby keeping the water valve open.

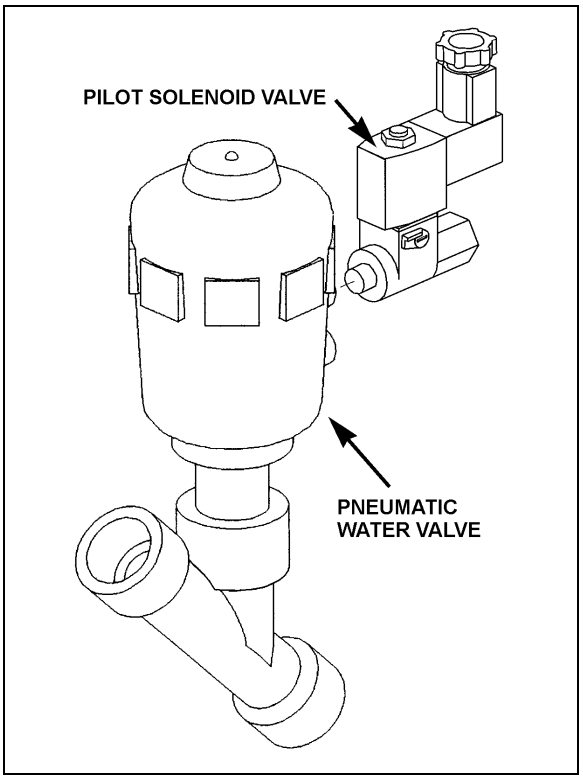

FIGURE 53: CENTRAL HOT WATER PNEUMATIC VALVE ASSEMBLY 22240

The central heater water valve requires a minimum amount of maintenance. The valve should be free of dirt sediment that might interfere with its operation. No other maintenance is needed unless a malfunction occurs.

10.6.2 Pneumatic Water Valve Disassembly

1. Shut off air supply pressure and electrical current to the pilot solenoid valve. Disconnect wires.
2. The water valve need not be removed from the line. Unscrew nipple, the actuator casing, tube, spindle and closure member can be removed (Fig. 54).
3. Remove the snap ring using a pair of pliers.
4. You can now access all seals for replacement

   Pneumatic water valve replacement seal kits:

   * Water Side: 871311
   * Actuator Side: 871312

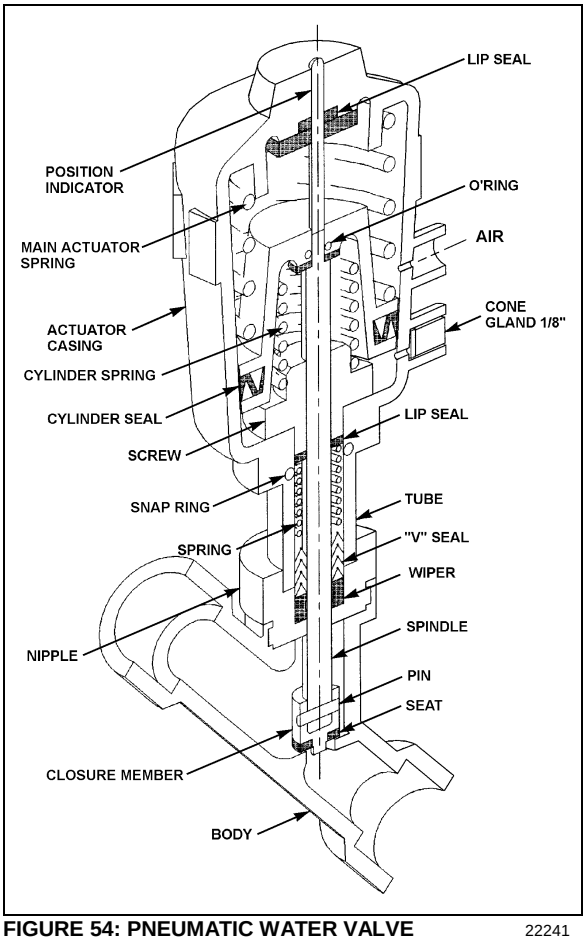

FIGURE 54: PNEUMATIC WATER VALVE 22241

10.6.3 Pneumatic Water Valve Reassembly

1. Assemble the actuator casing, tube, nipple, spindle and closure member.
2. Tighten the nipple in place in the body cavity as per figure 54. Fasten pilot solenoid vale to the pneumatic water valve. Reconnect air supply pressure and electrical current to the pilot solenoid valve.
3. Check for proper operation.

10.6.4 Pilot Solenoid Valve

1. No maintenance is needed unless a malfunction occurs.
2. A pilot solenoid valve replacement seal kit is available: 871311.

10.6.5 Valve Troubleshooting

PROBLEM	PROCEDURE
Valve fails to close.	1. Check electrical supply with a voltmeter. It should agree with nameplate rating. 2. Check pressure at pilot solenoid valve inlet. It must be at least equal to the minimum pressure stamped on the nameplate. It should not go below minimum while valve is operating.
Valve fails to open.	1. Check that the closure member assembly, and that main actuator and cylinder springs are free to travel. 2. Check that there is no restriction to the air escaping from the actuator casing. 3. Make sure that pilot solenoid valve operates properly.

10.7 WATER RECIRCULATING PUMP

10.7.1 Converted Vehicles Equipped With Central A/C – System Description

This vehicle is provided with a water recirculating pump which is located in the evaporator compartment (Fig. 55). The water recirculating pump consists of a centrifugal pump and an electric motor which are mounted on a common shaft in a compact assembly. A pilot between the pump end and motor cover ensures proper alignment of the complete assembly.

The motor is equipped with prelubricated sealed ball bearings which require no maintenance. A self-adjusting mechanical shaft seal is incorporated in this assembly to prevent coolant leakage between the pump cavity and armature shaft. This seal derives its lubrication from the liquid pumped, and **it will be destroyed if permitted to operate dry.**

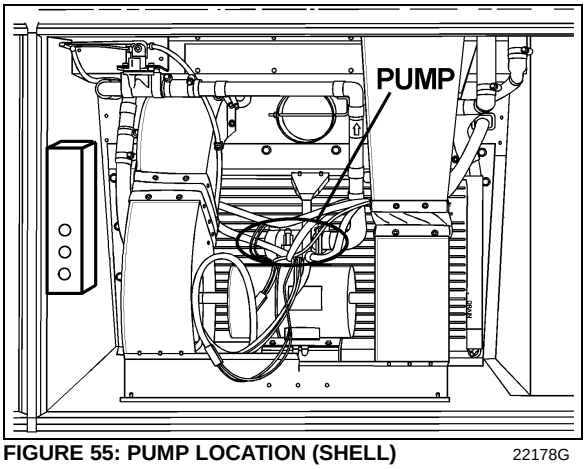

FIGURE 55: PUMP LOCATION (SHELL) 22178G

The pump requires no periodic maintenance other than replacement of motor brushes. Replacement of motor brushes can be performed without removing the pump assembly. Visual inspection of the pump, to determine if the shaft seal is intact, should be made while the pump is in operation. If there is evidence of coolant leakage, the unit must be disassembled for corrective measures.

Disassembly of the pump will be necessary only in the case of a seal leak, bearing failure, or motor failure.

10.7.1.1Removal

1. Stop engine and allow engine coolant time to cool.
2. Close shutoff valves. Refer to *"05 COOLING"* under heading *"Draining Cooling System"* for location of valves.
3. Disconnect the electrical wiring from the motor.

⚠ WARNING ⚠

Before proceeding with the following steps, check that coolant has cooled down.

4. Disconnect water lines from pump at connections between hoses and copper pipes (leave hoses connected to pump).
5. Remove the two clamps holding the pump motor to its mounting bracket. Remove the pump with the motor as an assembly.

10.7.1.2Disassembly

1. Remove two brush caps (5) and two brush assemblies (4). When removing brushes, note the position of the brush in the tube. Brush life is significantly decreased if brushes are not replaced properly.
2. Remove the pump cover (item #11) by first removing the 4 head screws. Remove cover carefully to prevent damaging the O-ring (12) (disconnect hoses from cover only if required).
3. Remove O-ring (12).
4. Remove two hex nuts (7) retaining pump assembly to motor.
5. Remove acorn nut (9) and gasket (10), then remove impeller (8) and components of the pump seal assembly (14).

⚠ CAUTION ⚠

Do not scratch or mar the sealing surface of this seat, as its sealing feature will be affected, thus resulting in continuous leakage.

Inspection

Components removed from the recirculating pump and motor assembly should be compared with new parts to determine the degree of wear.

10.7.1.3Brushes

1. When removing brushes, note the position of the brush in the tube. Brush life is shortened if the brushes are not replaced properly.
2. Examine brushes for the following:

   a. Wear
      Replace the brushes if less than 25% of the usable brush is left (less than 0.300 inch [8 mm]).

   b. Chipped edges
      Chips can be caused by improper handling or installation. Badly chipped brushes should be replaced regardless of their length.

   c. Annealed brush spring
      This can be detected by noting the resiliency of the spring. Annealing is caused by failing to tighten the brush caps properly, thus not providing a good low resistance contact between the terminal and the brush tube. Replace brushes showing evidence of annealed springs.

   d. Frayed or broken pigtail
      An improperly installed brush may have the pigtail (shunt) pinched under the terminal or between the coils of the spring. If the pigtail is badly frayed or broken, replace the brush.

3. Observe the following factors when replacing brushes:

   a. The face of a new brush is carefully cut to cause proper seating during the *"wear-in"* period.

   b. Improper installation can harm both the brush and the commutator.

   c. Replacement brushes should be of the proper grade.

   d. New brushes have a six (6) degree angle. The brush should always be inserted so that the angle is open away from the pump end of the assembly (inset, Figs. 56).

   e. Brush performance will be affected if the spring and terminal are not properly placed in the brush tube. The spring should be free over its entire length and the terminal should make good contact with the metal brush tube insert.

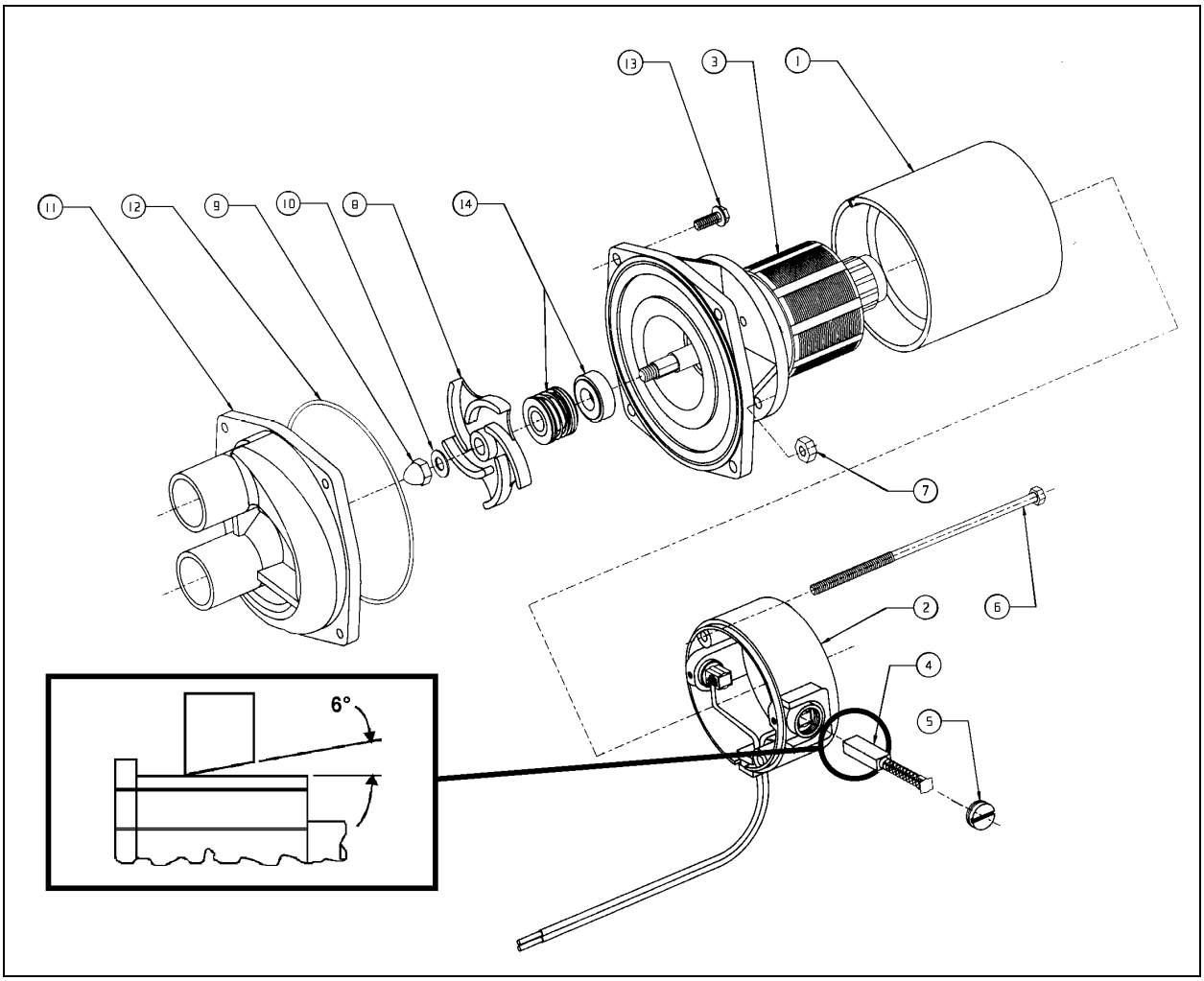

FIGURE 56: WATER RECIRCULATING PUMP (CONVERTED VEHICLE - CENTRAL A/C) 22091

ITEM	DESCRIPTION	QTY.	ITEM	DESCRIPTION	QTY.
	MOTOR			**IMPELLER**	
	Motor Ass'y - Items 1-7	1	8	Impeller	1
1	Stator	1	9	Acorn Nut	1
2	End Frame Assembly	1	10	Gasket	1
3	Armature adapter Ass'y	1		**COVER**	
4	Brush Assembly	2	11	Cover - Housing	1
5	Cap (brush holder)	2	12	O-ring	1
6	Case bolt 10-32 X 5	2	13	Screw	4
7	10-32 Hex Nut	2		**SEAL**	
			14	Seal Assembly	1

10.7.1.4Bearings

1. Rotate the motor shaft. If the ball bearings show evidence of wear, they should be replaced.

NOTE
When removing the armature from the motor, the number of washers and their arrangement should be noted. Improper numbers and/or installation of washers can cause improper tracking of brushes, which will result in excessive preloading of bearings and noisy operation.

2. To help prevent damaging the armature winding and/or the commutator, when removing the bearings, the use of a bearing puller is recommended.
3. Replacement bearings should be pressed into the same exact location as the original bearings.
4. It is recommended that a suitable sealant (such as Loctite or equivalent) be used between the shaft and the bearing, if the fit is not tight enough to prevent the shaft from spinning inside the inner race.
5. After replacing the bearings, check the position of the commutator in the motor by looking down into the brush tube. Neither the riser nor the edge of the commutator should be visible.

10.7.1.5Commutator

1. The commutator is a precise assembly. Although it is solidly built and made of a fairly tough material, it can be easily ruined by careless handling.
2. The commutator should be refinished only on equipment which provides good concentricity and the proper finish.
3. The commutator should be refinished if a micrometer reading shows a difference between *"in track"* and *"off track"* diameter of 0.187" (4,7 mm) or more.
4. The commutator should be carefully undercut with a 0.025" (0,6 mm) or less slot width.
5. A 25 to 50 micromesh finish is desirable on a new or refinished commutator.
6. The commutator should not be touched with the fingers since sweat and body oils will rapidly discolor and oxidize its surface.

10.7.1.6Miscellaneous

Inspect seal assemblies (14) to determine wear. If the seal has leaked, or is badly worn, it is recommended that a complete new seal assembly be installed.

10.7.1.7Assembly

1. Install seal assembly (14).
2. Insert impeller (8) and secure with acorn nut (9) and gasket (10).
3. Install O-ring (12).
4. Attach cover (11) to the pump body using four screws (13).
5. Install motor brushes assembly (4) and brush caps (5).

10.7.1.8Installation

1. Connect water lines to pump (hoses to copper pipes). Use a soapy water solution to help insert water lines.
2. Position the pump and motor assembly on the mounting bracket. Position the mounting clamps over the motor and secure with mounting bolts.
3. Connect electrical wiring to the pump motor.
4. Open shutoff valves. Refer to *"05 COOLING"* under heading *"Draining Cooling System"* for location of valves.
5. Fill the cooling system as previously instructed in this section under *"10.2 Filling Heating System"*, then bleed the system as previously instructed in this section under *"10.3 Bleeding Heating System"*.

10.7.2 Coaches Equipped With Central A/C or Driver's A/C – System Description

This vehicle is provided with a water recirculating pump which is located in the evaporator compartment (Fig. 57) or in the reclining bumper compartment (optional with driver's system). The water recirculating pump consists of a centrifugal pump and an electric motor which are mounted in a compact assembly.

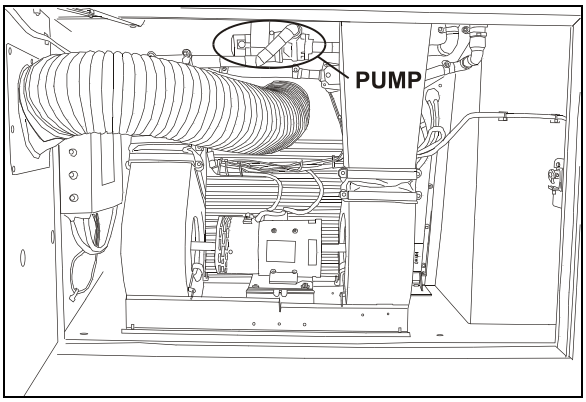

FIGURE 57: PUMP LOCATION (CENTRAL A/C) 22281

The (seal less) pump requires no periodic maintenance other than replacement of motor brushes. Replacement of motor brushes can be performed without removing the pump assembly. Inspection of the pump, to determine if the pump is working properly, should be made while the pump is in operation. If there is evidence that the pump is not operating as per specifications, the unit must be disassembled for corrective measures.

Disassembly of the pump will be necessary only in the case of a rotor failure or motor failure.

10.7.2.1Removal

1. Stop engine and allow engine coolant time to cool.
2. Close shutoff valves. Refer to *"05 COOLING"* under heading *"Draining Cooling System"* for location of valves.
3. Disconnect the electrical wiring from the motor.

⚠ WARNING ⚠

Before proceeding with the following steps, check that coolant has cooled down.

NOTE

On driver's A/C system, remove residual coolant through coolant strainer. Also check strainer's condition; clean or replace if necessary.

4. Disconnect water lines from pump at flange connections. Place a container to recover the residual coolant in the line
5. Remove the two clamps holding the pump motor to its mounting bracket. Remove the pump with the motor as an assembly.

10.7.2.2Disassembly

1. Separate the housing (1) from the adapter (7) by first removing the 4 capscrews. Remove housing carefully to prevent damaging the O-ring (2).
2. Remove rotor assembly (4), washers (3) and shaft (5) from the adapter.

Inspection

Components removed from the recirculating pump and motor assembly should be compared with new parts to determine the degree of wear.

10.7.2.3Brushes

1. When removing brushes, note the position of the brush in the tube. Brush life is shortened if the brushes are not replaced properly.
2. Examine brushes for the following:

   a. Wear
      Replace the brushes if less than 25% of the usable brush is left (less than 0.300 inch [8 mm]).

   b. Chipped edges
      Chips can be caused by improper handling or installation. Badly chipped brushes should be replaced regardless of their length.

   c. Annealed brush spring
      This can be detected by noting the resiliency of the spring. Annealing is caused by failing to tighten the brush caps properly, thus not providing a good low resistance contact between the terminal and the brush tube. Replace brushes showing evidence of annealed springs.

   d. Frayed or broken pigtail
      An improperly installed brush may have the pigtail (shunt) pinched under the terminal or between the coils of the spring. If the pigtail is badly frayed or broken, replace the brush.

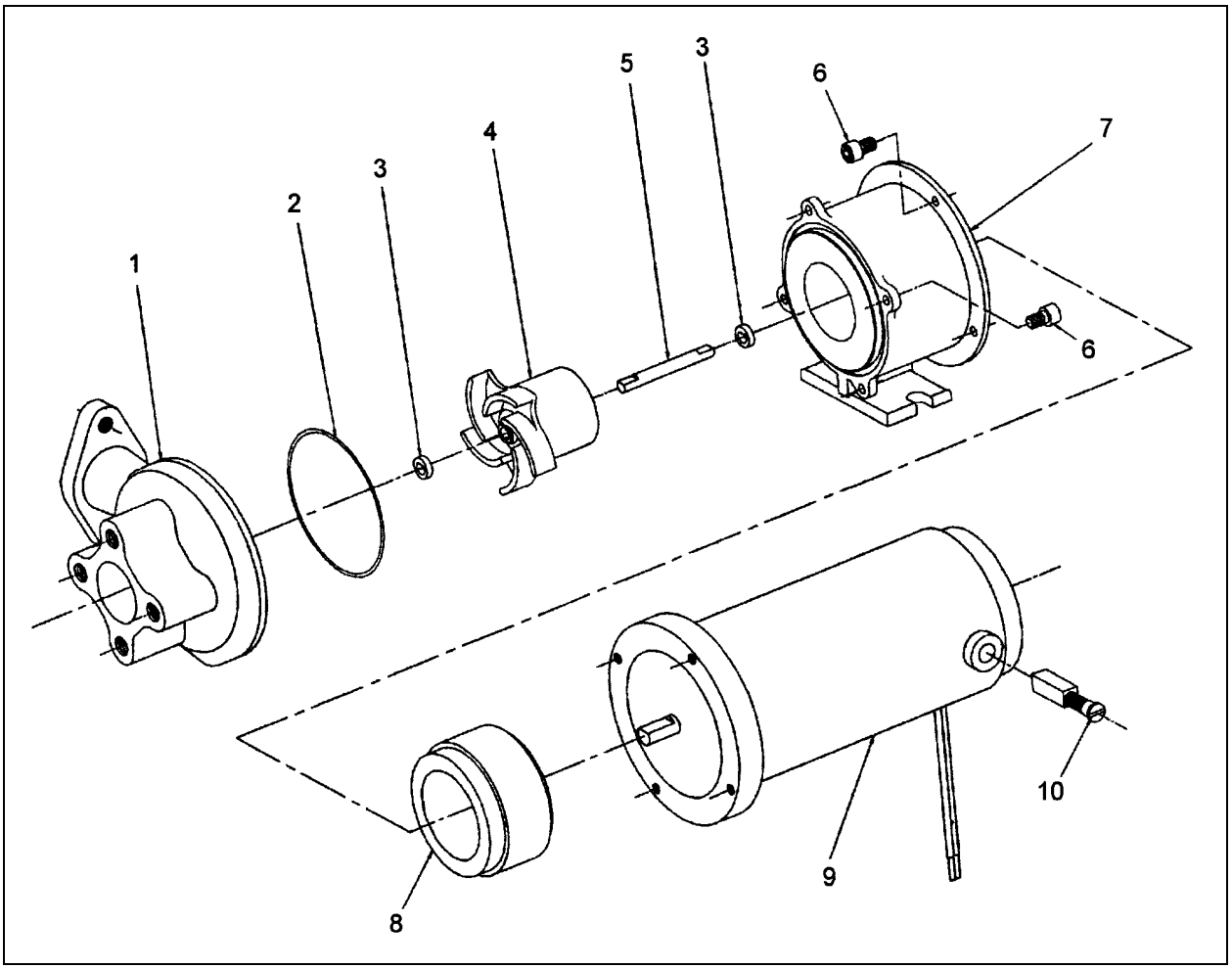

FIGURE 58: WATER RECIRCULATING PUMP (COACH - CENTRAL A/C OR DRIVER'S A/C) 22282

ITEM	DESCRIPTION	QTY.
1	Housing	1
2	O-Ring	1
3	Washer SS	2
4	Rotor Assembly	1
5	Shaft SS	1
6	Screw, Cap Hex Soc. Head 8-32 X 3/8	8
7	Adaptor	1
8	Drive Magnet	1
9	Motor Assembly 24V	1
10	Brush	2

3. Observe the following factors when replacing brushes:
   a. The face of a new brush is carefully cut to cause proper seating during the *"wear-in"* period.
   b. Improper installation can harm both the brush and the commutator.
   c. Replacement brushes should be of the proper grade.
   d. Brush performance will be affected if the spring and terminal are not properly placed in the brush tube. The spring should be free over its entire length and the terminal should make good contact with the metal brush tube insert.

10.7.2.4Assembly

1. Install washer (3), shaft (5) and rotor assembly (4) into adapter (7).
2. Install O-ring (2) into housing (1) and assemble housing to the adapter.
3. Secure housing to adapter using 4 capscrews (6).

10.7.2.5Installation

1. Apply gasket cement to the line flanges, put the two gaskets in place, and connect water lines to the pump at the flange connections. Position the pump and motor assembly on the mounting bracket. Position the mounting clamps over the motor and secure with mounting bolts.
2. Connect electrical wiring to the pump motor.
3. Open shutoff valve. Refer to *"05 COOLING"* under heading *"Draining Cooling System"* for location of valves.
4. Fill the cooling system as previously instructed in this section under *"10.2 Filling Heating System"*, then bleed the system as previously instructed in this section under *"10.3 Bleeding Heating System"*.

10.8 WATER FILTER

10.8.1 Description

This vehicle is provided with a cleanable water filter, which is located in the evaporator compartment behind the R.H. side air duct. The filter uses the micronic principle of filtration which utilizes an accordion -pleated design for a maximum filtering area. A relief valve integrated to the filter element allows bypass of the filter in case of heavy restrictions.

Vehicles equipped with driver's A/C system only are provided with a water filter located in reclining bumper compartment.

10.8.2 Maintenance

Filter maintenance consists in changing the element at break-in 3000 miles (4 800 km), and subsequently every 50,000 miles (80 000 km) or once a year, whichever comes first.

NOTE
Service water filter each time soldering is performed at any point on coolant piping; operate heating system a few minutes first, so that soldering residues are routed to the strainer.

10.8.3 Servicing (Vehicles with central A/C system)

1. Stop engine and allow engine coolant time to cool.
2. Close shutoff valves. Refer to *"05 COOLING"* under heading *"Draining Cooling System"* for location of valves.

⚠ WARNING ⚠
Before proceeding with the following steps, check that coolant has cooled down.

3. Rotate bowl (Fig. 59) counterclockwise and remove.
4. Remove filter element (Fig. 59) from housing.
5. Place new/clean element in housing, centering it on location in the head.
6. Inspect bowl seal and replace if necessary.
7. Replace bowl. Rotate clockwise and handtighten.

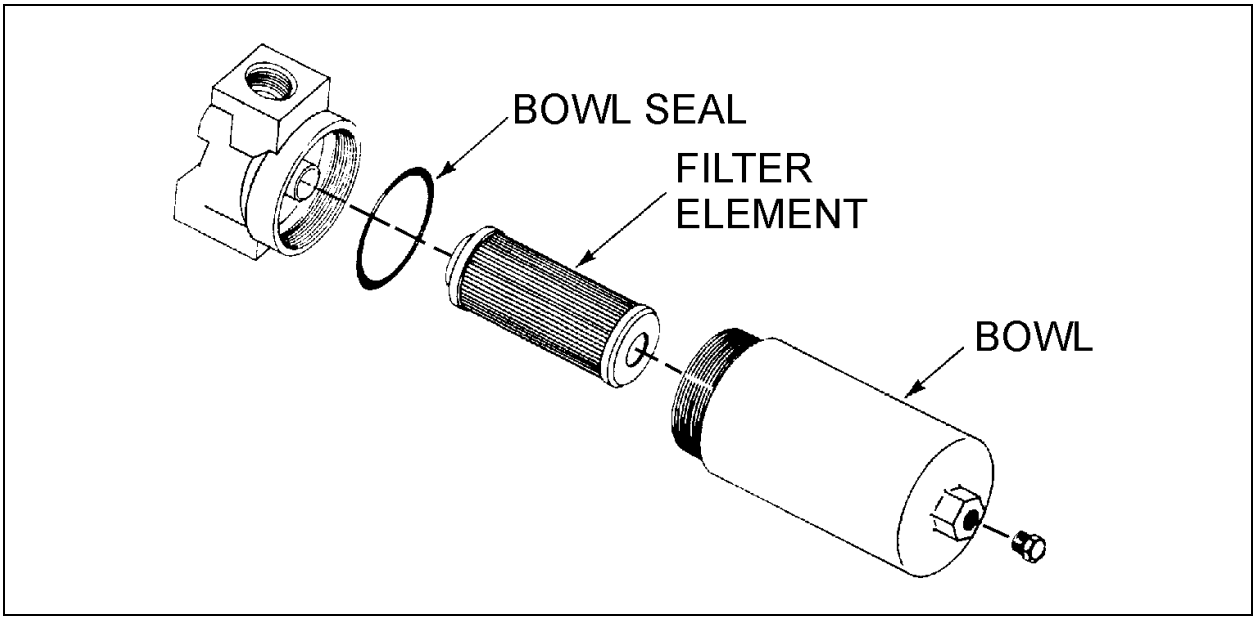

FIGURE 59: WATER FILTER 22057

8. Correct coolant level in surge tank as instructed previously in this section under *"Filling Heating System"*.

10.8.4 Servicing (Vehicles with driver's A/C system)

1. Stop engine and allow engine coolant time to cool.
2. Close shutoff valves. Refer to *"05 COOLING"* under heading *"Draining Cooling System"* for location of valves.

⚠ WARNING ⚠

Before proceeding with the following steps, check that coolant has cooled down.

3. Unscrew the filter retaining plug.
4. Remove strainer, then clean inside strainer housing.
5. Using water under pressure, flush the strainer from the outside.
6. Reinstall strainer, then tighten the retaining plug.
7. Open shut-off valves.
8. Correct coolant level in surge tank as instructed previously in this section under *"10.2 Filling Heating System"*.

10.9 BY-PASS SOLENOID WATER VALVE (OPTIONAL)

This valve is optional and is installed only on vehicles equipped with a preheater. The valve is located in the evaporator compartment. This valve is similar to the driver's solenoid valve (refer to Fig. 52 for part names).

10.9.1 To Remove or Change the Coil

* Stop engine and allow engine coolant time to cool.
* Close shutoff valves. Refer to *"05 COOLING"* under heading *"4.7 Draining Cooling System"* for location of valves.

<u>To remove the solenoid coil:</u>

First take out the retaining screw at the top of the coil housing. The entire coil assembly can be lifted off the enclosing tube.

<u>To reassemble:</u>

Make sure that the parts are placed on the enclosing tube in the following order:

1. Be sure to change electrical data plate according to coil specifications change.
2. Place coil and yoke assembly on the enclosing tube. Lay data identification plate in place.

3. Insert the coil retaining screw, rotate housing to proper position and tighten screw securely.

10.9.2 To Take the Valve Apart

To disassemble:

This valve may be taken apart by removing the socket head screws which hold the body and bonnet together. After removing the screws, carefully lift off the bonnet assembly (upper part of the valve). Don't drop the plunger. The diaphragm can now be lifted out. Be careful not to damage the machined faces while the valve is apart.

NOTE
The above procedure must be followed before brazing solder type bodies into the line.

To reassemble:

Place the diaphragm in the body with the pilot port extension up. Hold the plunger with the synthetic seat against the pilot port. Make sure the bonnet O-rings are in place, the bonnet assembly over the plunger, and that the locating sleeve in the bonnet enters the mating hole in the body. Insert body screws and tighten uniformly.

10.10 PREHEATING SYSTEM (OPTIONAL ON COACHES ONLY)

The preheater is located inside engine compartment and is accessible through L.H. side rear service compartment (refer to figure 60).

This Auxiliary Preheating System is used for preheating and retaining the heat of water-cooled engines. It can be used before starting the engine to ease its starting and to provide immediate inside heat upon operation of the heating system. It can also be used with engine running to maintain coolant heat and maintain the set temperature inside vehicle.

The heater operates independently from the vehicle engine. It is connected to the cooling and heating circuits, the fuel system and the electrical system of the vehicle.

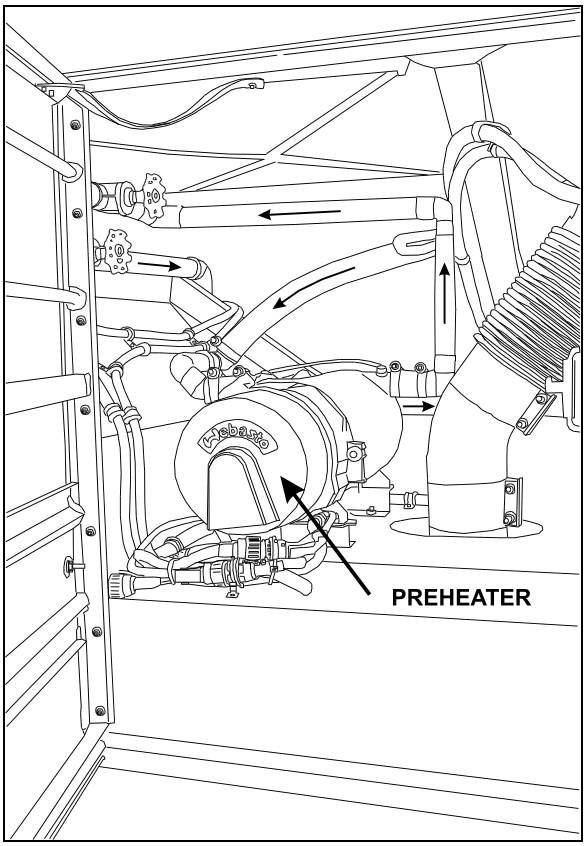

FIGURE 60: L.H. SIDE REAR SERVICE COMPART. 22245A

The pilot lamp turns on when the heater is switched on. Combustion air flows in to flush out the combustion chamber and the water circulation pump is put into operation. The fuel metering pump conveys fuel in precise doses to the combustion chamber where fuel and combustion air form a combustible mixture which is ignited by the glow plug.

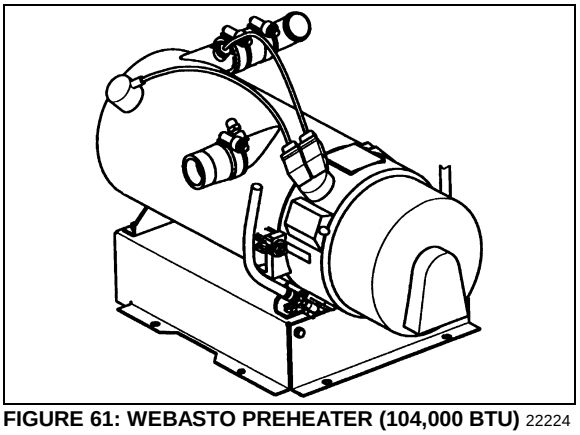

FIGURE 61: WEBASTO PREHEATER (104,000 BTU) 22224

Once the flame sensor has signaled to the control unit that combustion has taken place correctly, the glow spark plug and ignition coil are switched off.

The hot combustion gases are diverted at the end of the flame pipe, then pass through the indirect heating surfaces of the heat exchanger and transmit their heat to the water passing through the heat exchanger.

The heat is thermostatically controlled and operates intermittently, i.e. the switched-on times of the burner vary depending on the heat requirement. The water temperature depends on the setting of the built-in water thermostat.

The water circulation pump remains in operation as long as the heater is operating, even in the regulation intervals and during the delayed cutout of the switched-off heater. The pump can also be operated independently from the heater by means of an appropriate circuit. The heater can be switched on at any time, even during the delayed cutout period. Ignition takes place once this delay time is over.

When the heater is switched off, the fuel supply is interrupted. The flame goes out, and at the same time a delayed cutout of some 2.5 minutes begins. The combustion air still flowing flushes the remaining combustion gases out of the chamber and cools off the hot parts on the exhaust side of the heat exchanger, while the water circulation pump, still running, transmits the heat present in the heat exchanger, thus preventing local overheats. Once the delayed cutout time is over, both the combustion air blower and the water circulation pump switch off automatically. A cutout will take place in case of any failure of the preheater.

10.10.1 Operation

Switch on the heater. The operation indicator lamp comes on and the heater motor and circulating pump begin to run. After about 10-25 seconds the solenoid valve opens and fuel is sprayed into the combustion chamber. At the same time, the electronic ignition unit produces high voltage (8000 V) and the mixture of fuel and air in the combustion chamber is ignited by the spark on the ignition electrodes. The flame is indicated by the flame detector, then the electronic ignition unit stops producing high voltage and combustion continues by itself (spark on electrodes is required only to ignite the flame). At this moment, the heater is working and producing heat.

If the heater is switched off by the on/off switch, the solenoid valve interrupts fuel supply, combustion stops and indicator lamp turns off. Combustion air fan still blows air, cleaning the combustion chamber of any fumes and cooling down the combustion chamber. Coolant circulation pumps coolant, making a purge cycle for approximately 2-3 minutes, thus protecting the heater against overheating.

If the heater is not switched off by the on/off switch, the control thermostat will switch off the heater when coolant temperature reaches 165° ± 6°F (75° ± 3°C) and turns it on at 154° ± 9°F (68° ± 5°C). During this time, the heater (combustion) is off and the indication lamp and coolant pump are on. Combustion air fan blows air for 2-3 minutes and then turns off.

10.10.2 Preheating System Timer

The timer, located on L.H. lateral console is used to program the starting and stopping time of the preheating system. The system indicator light, located on the timer, illuminates when the system is functional.

⚠ CAUTION ⚠

The preheating system should not operate for more than one hour before starting engine as this could discharge batteries.

⚠ WARNING ⚠

Preheating system must not operate when vehicle is parked inside or during fuel fill stops.

NOTE

Preheating system uses the same fuel as the engine.

In case of failure:

1. Shut off and turn on again.
2. Check main circuit breaker and overheat fuse.
3. Have system repaired in a specialized shop.

10.10.3 Timer Operating Instructions (Webasto)

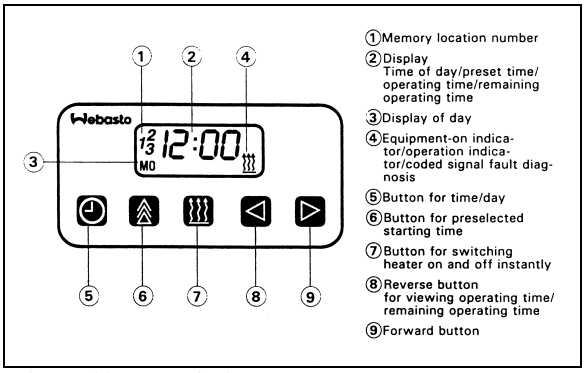

FIGURE 62: WEBASTO 18327

These instructions refer to the timer illustrated in figure 62. They are the same instructions provided in the Webasto instruction booklet, provided with your vehicle.

Remaining Operating Time

The remaining operating time refers to the period of time the heater still continues to remain in operation. It may be changed while the heater is in operation.

Setting the Digital Timer

After the power has been connected, all symbols on the digital display are flashing. The time of the day and the day of the week must be set.

All flashing symbols of the timer can be set by means of the Forward (9) or Reverse (8) buttons.

When buttons (8) and (9) are pressed for more than 2 seconds, the quick digit advance mode is activated.

Setting the Time and Day of the Week

1. Press button (5) for more than 2 seconds (time display flashes).
2. Press (8) or (9) button to set the time of day.
3. Wait 5 seconds. The time of day is stored (time of week flashes).
4. Press (8) or (9) button to set the correct day of week.
5. Wait 5 seconds. The day of week is stored.

Viewing the Time (Ignition ON)

Continuous display of current time and day of the week.

Viewing the Time (Ignition OFF)

Briefly press button (5) to display current time and day for 5 seconds.

SWITCHING HEATER ON (INSTANT HEATING)

With Ignition ON:

Press button (7). Heater is switched on (continuous operation) and continues to operate until button (7) is pressed again or ignition is switched off.

NOTE
If the ignition is switched off while heater is in operation, the remaining operating time of 5 minutes flashes on the display and the heater will continue to operate for this period of time.

With Ignition OFF:

Press button (7). Heater is switched on for preset operating time (the factory-set heater operating duration is 60 minutes)

SWITCHING HEATER OFF

Press button (7). The heater starts its after-run cycle and switches off thereafter.

Presetting Operating Duration

1. Press button (6). Memory location number flashes.

NOTE
By repeatedly pressing button (6), starting time 2 or 3 can be preset.

2. Press button (8) or (9) until correct startup time is set.
3. Wait 5 seconds. Preset starting time is stored and day of week flashes.
4. Press button (8) or (9) to select the correct startup day of week.
5. Wait 5 seconds. The startup day of week is stored.

The number of memory location remains on the display. The timer is now in the programmed mode and will switch the heater in at the preset time.

NOTE
We recommend that memory locations 1 and 2 be used for presetting times within 24 hours of setting the timer. Memory location 3 can be used for a starting time within the next 7 days of setting the timer.

Recalling Preset Times

Press (6) repeatedly until the desired memory location number and preset time are displayed.

Canceling Preset Time

Press button (6) repeatedly until no more memory location number is visible on the display.

Setting Operating Time

1. With heater off, press button (8). Operating time flashes.
2. Press button (8) or (9) to set the operating time (between 1 and 120 minutes).

The heater remains in operation for the preset time (except for continuous operation).

Setting the Remaining Operating Time

1. With heater in operation, press button (8). Remaining operating time flashes.
2. Set remaining time with button (8) or (9).
3. Wait 5 seconds. Remaining operating time is stored.

Operational Failure Symptoms via Fault/Flash code

On heaters equipped with a fault diagnosis system using coded light signals, the equipment-on indicator/operation indicator flashes. Refer to the following table.

Failure Symptom	Probable Cause	Check and Correct
1X Flash (F 01) No combustion after completion of start up sequence.	- Fuel system - Combustion air - Electronic ignition	- Fuel level - Type of fuel being used - Fuel filter - Fuel line connections (air bubbles in fuel lines) - Fuel nozzle plugged - Air intake or exhaust, restricted or plugged - Incorrect electrode gap
2X Flashes (F 02) Flame out during burner operation no restart possible	- Fuel supply (shortage of fuel)	- Restriction in the fuel system - Fuel filter - Fuel line connections (air bubbles in fuel lines) - Type of fuel being used
3X Flashes (F 03) Low voltage for more than 20 seconds	- Electrical system	- Load test batteries - Corrosion at connections - Loose connections
4X Flashes (F 04) Flame detector recognizes false flame signal during pre-start or shut-down cycle	- Defective flame detector	- Replace flame detector
5X Flashes (F 05) Flame detector	- Wiring - Defective flame detector	- Damaged wiring, open or short circuit - Replace flame detector
6X Flashes (F 06) Temperature sensor	- Wiring - Defective temperature sensor	- Damaged wiring, open or short circuit - Replace temperature sensor
7X Flashes (F 07) Fuel solenoid valve	- Wiring - Defective solenoid valve	- Damaged or corroded wiring, open or short circuit - Replace solenoid valve

8X Flashes (F 08) Combustion air fan motor	- Wiring - Wrong RPM - Defective combustion air fan motor	- Damaged wiring, open or short circuit - Replace combustion air fan - Replace combustion air fan
9X Flashes (F 09) Circulation pump motor	- Wiring - Defective circulation pump motor	- Damaged wiring, open or short circuit - Replace circulation pump motor
10X Flashes (F 10) Temperature limiter	- Overheat condition - Coolant flow - Wiring - Defective temperature limiter	- Reset temperature limiter - Coolant level or flow restriction - Air trapped in coolant circuit - Damaged or corroded wiring, open or short circuit - Replace temperature limiter
11X Flashes (F 11) Electronic ignition coil	- Wiring - Defective electronic ignition coil	- Damaged wiring, open or short circuit - Replace electronic ignition coil
12X Flashes (F 12) Heater lock out	- 3 repeated faults/flame-outs or 5 repeated start attempts	- Reinitialize control unit by switching heater on and disconnecting power.

10.10.4 Troubleshooting and Maintenance

Refer to the Webasto manual for more information.

NOTE
If there are no heater faults, the heater will go through a normal start cycle and regulate based on thermostat setting.

NOTE
Switch on the preheating system briefly about once a month, even during the warm season.

⚠ CAUTION ⚠
When welding on the vehicle, disconnect the preheater module connector in order to protect this system from voltage surges.

⚠ CAUTION ⚠
To avoid running down the batteries, do not turn on the preheating system for more than one hour before starting the engine.

⚠ WARNING ⚠
The preheating system uses the same fuel as the engine. Do not operate in a building or while refueling. Operate only in a well-ventilated area.

11. SPECIFICATIONS

Main evaporator motor

Make.....US MOTOR
Type T-17
Voltage ..... 27.5 V DC
Current draw..... 68 amps
Horsepower 2
Revolution ..... 1st :1400 rpm, 2nd : 1880 rpm nominal
Insulation .....Class F
Motor Life ..... 20 000 hours
Brush life ..... 10 000 hours
Motor supplier number D5092VPRC8
Motor Prevost number..... 563008
Brush Prevost number 562951

Condenser fan motors

Make.....US MOTOR
Type TF-12
Voltage ..... 28.5 V DC
Current draw..... 20 amps
Horsepower 0.57
Revolution .....1950 rpm
Insulation .....Class F
Motor ..... 20 000 hours
Brush life ..... 10 000 hours
Qty..... 2
Supplier number D591Y440PRC2
Prevost number..... 562579
Brush supplier number 9DB21003
Brush Prevost number 561914

Evaporator air filters (Central system) (Coach)

Make..... Permatron Corp.
Type .....Polypropylene
Supplier number .....IN 1X10X37 EXACT
Prevost number .....All vehicles (Top) 373336
Prevost number .....XL-40 vehicles (Bottom) 373338
Prevost number .....XL-45 vehicles (Bottom) 373337

Evaporator air filters (Central system) (Shell)

Make..... Permatron Corp.
Supplier number ..... IN 13X21X1 NOMINAL
Prevost number ..... (Qty = 3) 871034

Driver's unit evaporator motors

Make.....MCC
Voltage ..... 24 V DC
Quantity 1
Supplier number 25-0250
Prevost number 871135

Driver's unit evaporator air filter

Make.....MCC
TYPE ..... Recirculating air 6-¼" x 28" Washable
Supplier number 260593
Prevost number 871147

Make.....MCC
TYPE ..... Fresh air 3-5/8" X 5-1/4" Washable
Supplier number 260594
Prevost number 871144

Refrigerant

Type R-134a
Quantity (standard).....24 lbs (10.89 Kg)
Quantity (A/C Aux. system located in overhead compartments).....4 lbs (1.8 Kg)

Compressor (Central system)

Make ..... Carrier Transicold
Capacity, option R-134a ..... 41 CFM
Capacity, option R-22 ..... 37 CFM
Model, option R-134 ..... 05G-134A
Model, option R-22 ..... 05G-22
No. of cylinders 6
Bore ..... 2” (50,8 mm)
Operating speed ..... 400 to 2200 rpm (1750 rpm. Nominal)
Minimum speed (for lubrification) ..... 400 rpm
Nominal horsepower 15
Oil pressure at 1750 rpm ..... 15 to 30 psi (103-207 kPa)
Oil capacity ..... 1.13 U.S. gal (4,3 liters)
Weight ..... 142 lbs (64,5 kg)
Approved oils
-Castrol ..... SW 68 (POE)
Supplier number, option R-134a 68PD541-104-38
Supplier number, option R-22 ..... 68PD537-104-39
Prevost number, option R-134a 950314
Prevost number, option R-22 950207

A/C Compressor (Driver's and auxiliary systems)

Make ..... Seltec
Model TM-16HD
Weight ..... 10.9 lbs (4,9 kg)
Supplier number 18-00074-11
Prevost number 950372

Approved oil ..... ZXL100PG (PAG)
Prevost number 950382

Compressor unloader valve

Make..... Carrier Transicold
Type .....Electric (AMC)
Voltage ..... 24 V DC)
Watts 15
Supplier number (without coil).....17-40407-20
Prevost number (without coil)..... 950095
Coil supplier number 22-50030 (1)
Coil Prevost numbert..... 950096

Magnetic clutch

Make..... Carrier Transicold
Type ..... Housing mounted 9” dia., 2-B grooves
Voltage ..... 24 V DC
Coil resistance at 68 ^{o}F (20 ^{o}C)..... 5.15 – 5.69 ohms
Supplier number.....50-01122-90
Prevost number..... 950204

Compressor V belts

Make.....Dayco
Model (matching set of 2)..... BX97
Prevost number (with Delco 270/300 Amp Alternator)..... 506664

Compressor V belt

Make.....Dayco
Model..... BX100
Prevost number (with two BOSH Alternators)..... 506681

Condenser coil (Driver's and auxiliary systems)

Make.....Valeo
Supplier number.....
Prevost number.....

Condenser coil (Central system) (XL2-40 vehicles and, XL2-45 & 45E Shells)

Make..... Carrier Transicold

Aluminum

Supplier number.....68GF67-194-2

Prevost number..... 870654

Copper

Supplier number.....68GF67-194-3

Prevost number..... 870729

Condenser coil (Central system) (XL2-45 Coach)

Make..... Carrier Transicold

Aluminum

Supplier number.....68BC2-107

Prevost number..... 950259

Copper

Supplier number.....68BC2-107-1

Prevost number..... 950260

Evaporator coil (Central system)

Make..... Carrier Transicold

Supplier number..... 68BE2-105

Prevost number..... 871070

Receiver tank (with sight glasses)

Make.....HENRY

Maximum pressure..... 450 psig

Supplier number.....ARL-1217

Prevost number..... 950261

Filter Dryer assembly

Make.....AC&R HENRY

Supplier number.....815031-XH9

Prevost number..... 950262

Moisture indicator

Make....Henry
Supplier number.... MI-30-7/8S
Prevost number.... 950029

Driver's refrigerant liquid solenoid valve

Make.... Parker
Type .... Normally closed with manual bypass
Voltage .... 24 V DC
Amperage draw.... 0.67 amps
Watts.... 16
Supplier number (without coil).... RB9MP3-MM
Prevost number (without coil).... 95-0054
Coil supplier number .... R23MM 24 V DC-CB
Coil Prevost number.... 950055
Repair kit Prevost number.... 950056

Driver's hot water solenoid valve

Make.... Asco
Type .... Normally open (without manual bypass)
Voltage .... 24 V DC
Current draw.... 0.47 amp.
Watts.... 11.2
Pressure range.... 0 to 100 psi
Max. temperature .... 220°F
Supplier number (with coil).... 106-269-1
Prevost number (with coil).... 870812
Coil Prevost number.... 870960
Repair kit Prevost number.... 870872

Hot water solenoid valve (Central system)

Make.... Burkert
Type .... Normally open
Voltage .... 24 V DC
Supplier number.... SYST-2000-456023-6012-427923B

Prevost number 871252
Seal kit, Water Side 871311
Seal kit, Actuator Side 871312
Seal kit, Pilot Solenoid Valve 871313

Water recirculating pump (Central system - Coach) & (Driver's system - Shell)

Make ..... M.P. pumps
Voltage ..... 24 V DC
Supplier number 30011
Prevost number 871342

Water recirculating pump (Central system - Shell)

Make ..... M.P. pumps
Voltage ..... 24 V DC
Housing ..... Aluminum
Supplier number 29232
Prevost number 871032

Water filter (Central system)

Make ..... Parker
Supplier number (with element) 15CN1238WP
Prevost number (with element) 871028
Element supplier number 925566
Element Prevost number 871029

Water filter (small A/C system)

Make ..... BRAUKMANN
Supplier number T300B
Prevost number 870807

Driver’s expansion valve

Supplier number, option R-134a 26-0190
Supplier number, option R-22 26-0384
Prevost number, option R-134a 950221
Prevost number, option R-22 950282

Expansion valve (Central system)

Make..... Alco
Model.....TCLE 5-1/2
Supplier number..... 21059366
Prevost number..... 950320

Bypass solenoid water valve

Make..... Parker Hanninfin
Bypass supplier number..... RB21ME7-MM
Bypass Prevost number 870886
Coil supplier number R-23MM24VDC-CB
Coil Prevost number..... 870886
Repair kit supplier number 76754
Repair kit Prevost number..... 870980

Preheating system

Make.....WEBASTO
Model..... THERMO 300
Capacity.....104 000 Btu/h (30 kW)
Heating medium .....Coolant
Rated voltage ..... 24 V DC
Operating voltage ..... 20-28 V DC
Electric power consumption (without coolant recirc. Pump).....110 watts
Fuel consumption..... 1,2 US gallons/hr (4,5 liters/hr)
Supplier number.....9002092A
Prevost number..... 871202

SECTION 23: ACCESSORIES

CONTENTS

1. AUDIO AND VIDEO EQUIPMENT DESCRIPTION 23-4

1.1 AMP-3000 (HIGH POWER AMPLIFIER) 23-5
1.1.1 Removal 23-5
1.2 AM/FM RADIO 23-5
1.2.1 AM/FM Radio Cassette and Disc CD Changer 23-5
1.2.2 AM/FM Radio / CD 1 Disc 23-6
1.2.3 Removal 23-6
1.3 CONTROL HEAD 23-6
1.3.1 Removal 23-6
1.4 VIDEO CASSETTE PLAYER (VCP) 23-7
1.4.1 Removal 23-7
1.4.2 Installation 23-7
1.5 BOOM-TYPE MICROPHONE 23-7
1.5.1 Removal 23-7
1.5.2 Installation 23-7
1.6 HANDHELD PRIORITY MICROPHONE 23-8
1.7 RUBBER COATED MICROPHONE 23-8
1.8 WIRELESS MICROPHONE 23-8
1.9 TV TUNER 23-8
1.10 KARAOKE 23-8
1.10.1 Karaoke Panasonic Sound System – Mobile Dvd Player DV1500 23-8
1.11 DRIVER'S SPEAKERS 23-9
1.12 MONITOR 23-9
1.12.1 Removal 23-9
1.12.2 Installation 23-9
1.13 SCENIC VIEWING SYSTEM 23-9
1.14 ROOF ANTENNA INSTALLATION 23-9

2. HUBODOMETER 23-10

2.1 DESCRIPTION 23-10
2.2 OPERATION 23-10
2.3 REMOVAL 23-10
2.4 INSTALLATION 23-10

3. BACK-UP CAMERA AND MONITOR 23-10

4. COLD STARTING AID (ETHER) 23-10

4.1 PREVENTIVE MAINTENANCE 23-11
4.2 TROUBLESHOOTING (IF SYSTEM IS NON-FUNCTIONING) 23-11
5.3 THERMAL CUTOUT VALVE QUICK TEST 23-12

5. DESTINATION SIGN 23-12

5.1 DESCRIPTION 23-12
5.2 MAINTENANCE 23-12
5.3 DESTINATION SIGN LIGHT REPLACEMENT 23-12
5.4 ELECTRIC MOTOR REMOVAL AND INSTALLATION 23-12
5.5 SIGN CURTAIN REPAIR 23-13

6. LAVATORY 23-13

6.1 DESCRIPTION 23-13
6.2 MAINTENANCE 23-14
6.3 VENTILATION FAN 23-14
6.3.1 Description 23-14
6.3.2 Maintenance 23-14
6.3.3 Removal and Installation 23-14
6.4 DOOR LOCK 23-14
6.5 LAVATORY LIGHT 23-15
6.6 LAVATORY NIGHT-LIGHT 23-15
6.7 EMERGENCY BUZZER 23-15
6.8 FRESH WATER TANK 23-15
6.8.1 Fresh Water Tank Draining 23-15
6.8.2 Fresh Water tank Filling 23-16
6.9 LIQUID SOAP DISPENSER 23-16
6.10 FLUSH PUSH-BUTTON 23-17
6.10.1 Pneumatic Timer Removal and Installation 23-17
6.10.2 Timer Adjustment 23-17
6.11 FLUSH PUMP 23-17
6.11.1 Flush Pump Removal 23-17
6.12 SUMP TANKS 23-17
6.12.1 Main Sump Tank Draining 23-17
6.12.2 Main Sump Tank Filling 23-17
6.12.3 Auxiliary sump Tank Draining 23-17

7. AIR HORN VALVE 23-18

7.1 AIR HORN VALVE MAINTENANCE 23-18

8. WINDSHIELD WIPERS AND WASHERS 23-18

8.1 GENERAL DESCRIPTION 23-18
8.2 WIPER ARM 23-19
8.2.1 Wiper Arms Positioning 23-19
8.3 WINDSHIELD WIPER MOTOR 23-20
8.3.1 Windshield Wiper Motor Replacement 23-20
8.4 TROUBLESHOOTING 23-21

9. SPECIFICATIONS 23-22

ILLUSTRATIONS

FIGURE 1: SOUND SYSTEM JUNCTION PLATE 23-4
FIGURE 2: AMP-3000 AMPLIFIER 23-5
FIGURE 3: PANASONIC CQ-R145CAHH 23-6
FIGURE 4: 8-DISC CD CHANGER 23-6
FIGURE 5: PANASONIC CP-DP101U 23-6
FIGURE 6: CONTROL HEAD 23-6
FIGURE 7: V-3000 VCP 23-7
FIGURE 8: FRONT VIEW OF V-3000 VCP 23-7
FIGURE 9: BOOM-TYPE MICROPHONE 23-7
FIGURE 10: HANDHELD PRIORITY MICROPHONE 23-8
FIGURE 11: RUBBER COATED MICROPHONE 23-8
FIGURE 12: WIRELESS MICROPHONE 23-8
FIGURE 13: TUNER CONTROLS DESCRIPTION 23-8
FIGURE 14: MOBILE DVD PLAYER DV1500 23-9
FIGURE 15: MONITOR HOUSING REAR PANEL 23-9
FIGURE 16: INSTALLATION IN PARCEL COMPARTMENT 23-9
FIGURE 17: SCENIC VIEW CAMERA 23-9
FIGURE 18: HUBODOMETER 23-10
FIGURE 19: ENGINE 23-11
FIGURE 20: COLD STARTING AID 23-11
FIGURE 21: DESTINATION SIGN – ELECTRICAL 23-12
FIGURE 22: DESTINATION SIGN-ELECTRIC MOTOR 23-13
FIGURE 23; DESTINATION SIGN – ELECTRONIC 23-13
FIGURE 24: LAVATORY 23-13
FIGURE 25: VENTILATION FAN INSTALLATION 23-14
FIGURE 26: DOOR LOCK 23-15
FIGURE 27: F/W TANK SERVICE VALVES 23-15
FIGURE 28: FUNCTIONING OF LAVATORY 23-16
FIGURE 29: LIQUID SOAP DISPENSER 23-16
FIGURE 30: AIR HORN VALVE 23-18
FIGURE 31: WINDSHIELD WIPER INSTALLATION 23-19
FIGURE 32: MULTIFUNCTION LEVER 23-19
FIGURE 33: WINSHIELD WASHER RESERVOIR 23-19
FIGURE 34: WINDSHIELD WIPER (MOTOR SIDE) 23-20
FIGURE 35: WINDSHIELD WIPER (DRIVER SIDE) 23-20
FIGURE 36: DRIVING MECHANISM (DRIVER SIDE) 23-20
FIGURE 37: DRIVING MECHANISM (MOTOR SIDE) 23-20
FIGURE 38: WIPER ARMS POSITIONING 23-21

1. AUDIO AND VIDEO EQUIPMENT DESCRIPTION

The power amplifier is mounted on a sound system junction plate which is located in the first baggage compartment, L.H. side (Fig. 1), to access, open the first baggage compartment. In addition to the public address (PA) systems, options for AM/FM stereo radio and cassette player, CD changer, karaoke, wireless microphone, video system with monitors, scenic viewer and digital processor controller may be featured.

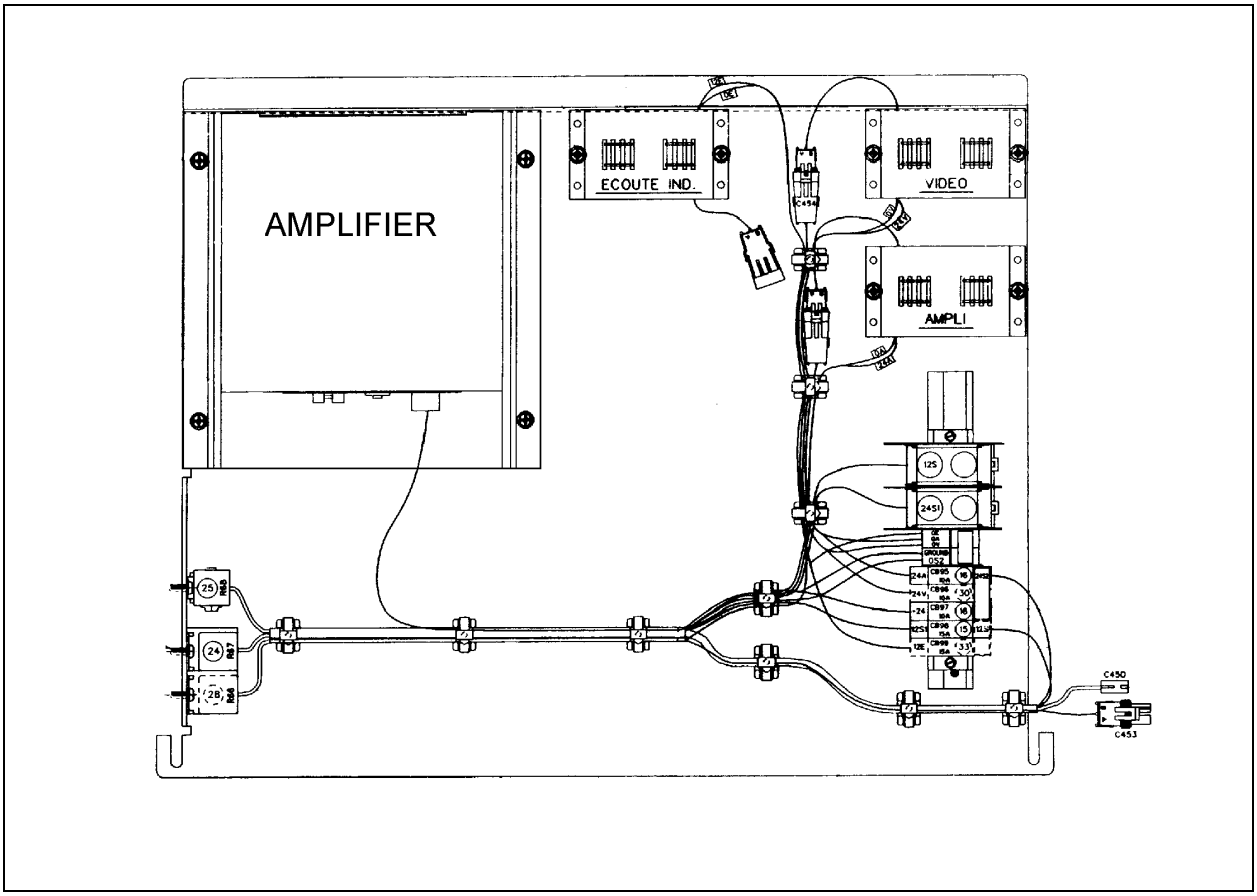

FIGURE 1: SOUND SYSTEM JUNCTION PLATE 23059

Each service module mounted to the underside of the parcel racks contains a 40-watt speaker. The fifteen speakers in the passenger section are wired in stereo and are powered by the amplifier. A microphone outlet mounted in the driver's area is provided as standard equipment.

1.1 AMP-3000 (HIGH POWER AMPLIFIER)

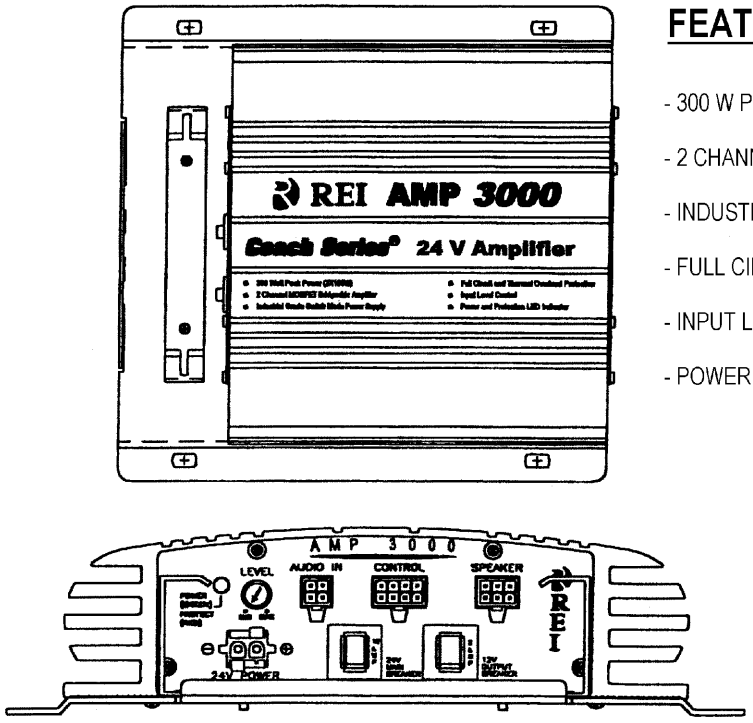

FEATURES

- 300 W PEAK POWER (2X150W)
- 2 CHANNEL MOSFET BRIDGEABLE AMPLIFIER
- INDUSTRIAL GRADE SWITCH MODE POWER SUPPLY
- FULL CIRCUIT AND THERMAL OVERLOAD PROTECTION
- INPUT LEVEL CONTROL
- POWER AND PROTECTION LED INDICATORS

FIGURE 2: AMP-3000 AMPLIFIER 23318

The AMP-3000 brings an added dimension to your stereo equipment and increases the total output of the system. The amplifier will perform with any unit operating in a 24-volt with negative ground electric system. The AMP-3000 is located on the first baggage compartment ceiling. To access, open the first baggage compartment door.

Set the volume control on the radio, then adjust the input control on the amplifier for an average listening level. This gives the best balance between radio output and system signal-to-noise ratio (Fig. 2).

⚠ CAUTION ⚠

The low level input adjustment for this amplifier has been preset according to system specifications.

1.1.1 Removal

Remove the amplifier as follows:

1. Set the battery master switch to the ''OFF'' position. Refer to Section 6: ''Electrical System'' for switch location.
2. Remove the sound system junction plate from its location. To perform this step, disconnect wiring connectors, remove cable ties and remove the bolts retaining the sound system junction plate.
3. Remove the four screws retaining the amplifier to its sound system junction plate.
4. Reverse the removal procedure to install the amplifier.

1.2 AM/FM RADIO

1.2.1 AM/FM Radio Cassette and Disc CD Changer

The audio system is composed of an AM/FM radio cassette player ''Panasonic, model CQ-R145CAHH (Fig. 3). Also, the vehicle may be equipped with a 8 disc CD changer and two additional Hi-Fi speakers in the driver's area. A roof antenna as well as different microphone outlets, can be installed as optional equipment.

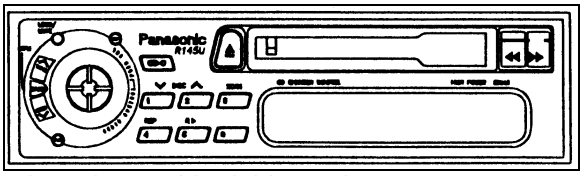

FIGURE 3: PANASONIC CQ-R145CAHH 23329

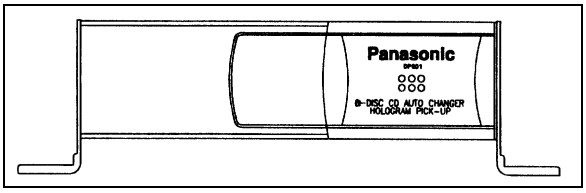

FIGURE 4: 8-DISC CD CHANGER 23332

1.2.2 AM/FM Radio / CD 1 Disc

This audio system is composed of an AM/FM radio CD player Panasonic model CP-DP101U (Fig. 5). Also, the vehicle may be equipped with two additional Hi-Fi speakers in the driver's area. A roof antenna as well as different microphone outlets, can be installed as optional equipment.

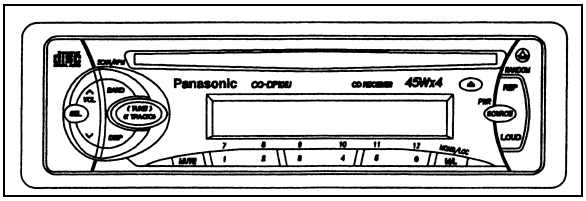

FIGURE 5: PANASONIC CP-DP101U 23317

Note: *Before attempting to solve an electrical problem on the sound system, refer to the master wiring diagrams.*

Instructions for proper use of the radio are included in the *"Panasonic Owner's Manual"* which is provided in the technical publication box delivered with the vehicle. The radio is a serviceable component and should only be serviced by a qualified electronics technician. Refer to *"Panasonic Service Centers"* guide included in the technical publication box.

1.2.3 Removal

To remove the radio from its location, proceed as follows:

1. Place the battery master switch in the ''OFF'' position.
2. Remove the dashboard panel cover.
3. Disconnect the electrical cable connectors from radio and unfasten back plate securing screw.
4. To separate the radio from its support, push in the dismounting pins included with the Panasonic Owner's Manual.
5. Push the unit through the front instrumentation panel.
6. Install a new unit by reversing the procedure.

1.3 CONTROL HEAD

The system 2000 (Fig. 6) is designed exclusively for coach operations. A complete system will control the following equipment:

- A specially designed 70 watt per channel RMS amplifier, capable of driving up to twenty-six, four ohm speakers.
- Six, custom designed ten-inch color monitors that incorporate a unique anti-theft locking slide mount. This makes installation and removal very easy.
- A specially modified VHS video cassette player that allows the operator convenient control over its functions.
- A digital audio processor that incorporates a centralized system control. The system 2000 microprocessor allows the operator to control up to three audio selections, permitting custom tailoring of each channel's sound quality. There are three microphone inputs for the PUBLIC ADDRESS SYSTEM (PAS), which are switchable between internal and external speakers. The unit contains a separate video section for the VCP that allows the driver to control his own separate audio selections.

Instructions for proper use of the control head are included in the ''*REI Operator's Manual"* which is provided in the technical publication box delivered with the vehicle.

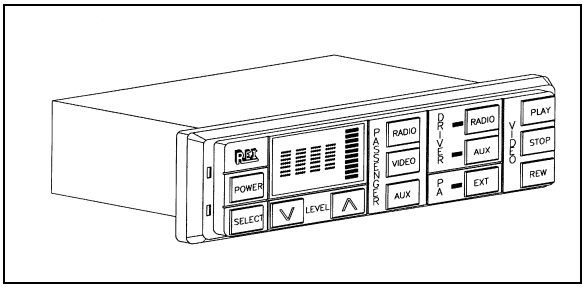

FIGURE 6: CONTROL HEAD 23070

1.3.1 Removal

To remove the control head from its location, proceed as follows:

1. Place the battery master switch in the ''OFF'' position.
2. Remove the dashboard panel cover.
3. Disconnect the electrical cable connectors from radio and unfasten back plate securing nut.
4. To separate the control head from its support, push in the dismounting pins included with the REI Operator's Manual.
5. Push the unit through the front instrumentation panel.
6. Install a new unit by reversing the procedure.

1.4 VIDEO CASSETTE PLAYER (VCP)

The VCP is located in the first parcel compartment on the driver's side (Fig 7 & 8). Instructions for proper use of the VCP are included in the *''Operator's Manual''* which is provided in the technical publication box.

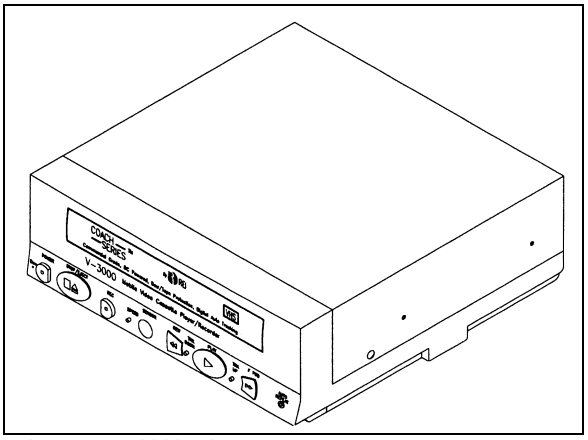

FIGURE 7: V-3000 VCP 23330

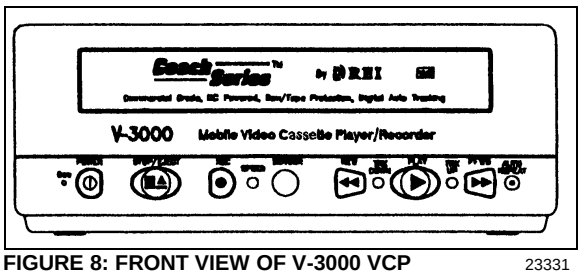

FIGURE 8: FRONT VIEW OF V-3000 VCP 23331

1.4.1 Removal

1. Place the battery master switch in the ''OFF'' position.
2. Remove the VCP/VCR mounting locknuts from rubber mounts.
3. Disconnect wiring.
4. Remove VCP/VCR unit from parcel compartment.

1.4.2 Installation

1. Install VCP/VCR unit into parcel compartment aligning rubber mount studs with mounting holes. Insert mount studs through mounting holes.
2. Install locknuts on mount studs.
3. Reconnect wiring.
4. Place the battery master switch in the ''ON'' position.

1.5 BOOM-TYPE MICROPHONE

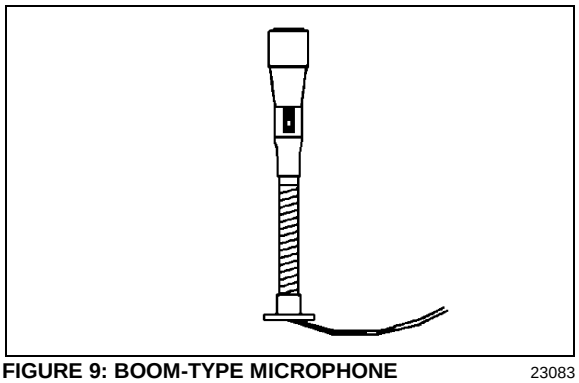

FIGURE 9: BOOM-TYPE MICROPHONE 23083

1.5.1 Removal

1. Place the battery master switch in the ''OFF'' position.
2. Remove the mounting screws at mounting flange.
3. Disconnect wiring.

1.5.2 Installation

1. Reconnect wiring.
2. Align mounting flange with holes and install screws.
3. Remove spacer block mounting screws.
4. Insert spacer block and install mounting screws.

5. Place the battery master switch in the ''ON'' position.

1.6 HANDHELD PRIORITY MICROPHONE

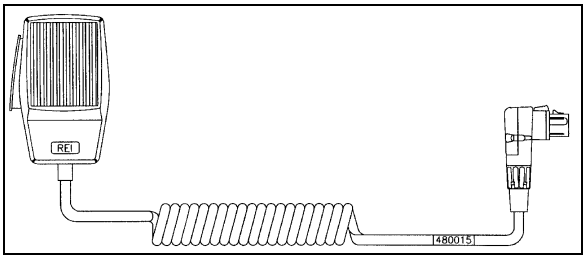

FIGURE 10: HANDHELD PRIORITY MICROPHONE 23216

1.7 RUBBER COATED MICROPHONE c/w 10 Feet cord and connector

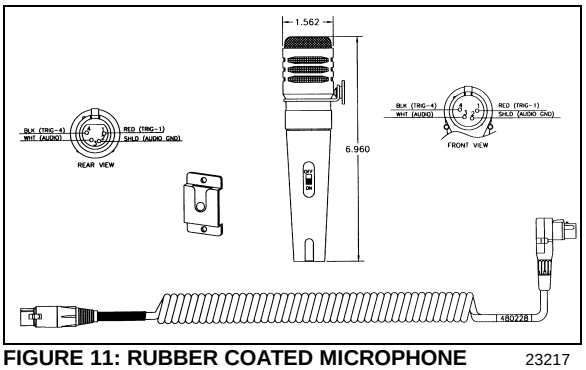

FIGURE 11: RUBBER COATED MICROPHONE 23217

1.8 WIRELESS MICROPHONE

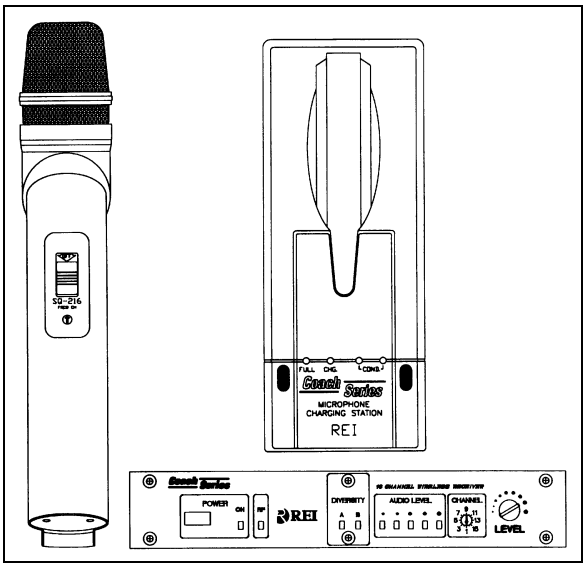

FIGURE 12: WIRELESS MICROPHONE 23226

The system 2000 16 channel wireless microphone, Receiver and Charging Cradle are custom designed units that allow for wireless PA communication from anywhere on the coach. The unit consists of a receiver mounted in the parcel area directly behind the driver, and a rechargeable hand-held microphone and charging unit. Instructions for proper use of the microphone are included in the *''REI Operating Manual''* which is provided in the technical publications box delivered with the vehicle.

1.9 TV TUNER

For TV tuner control descriptions, refer to fig. 13.

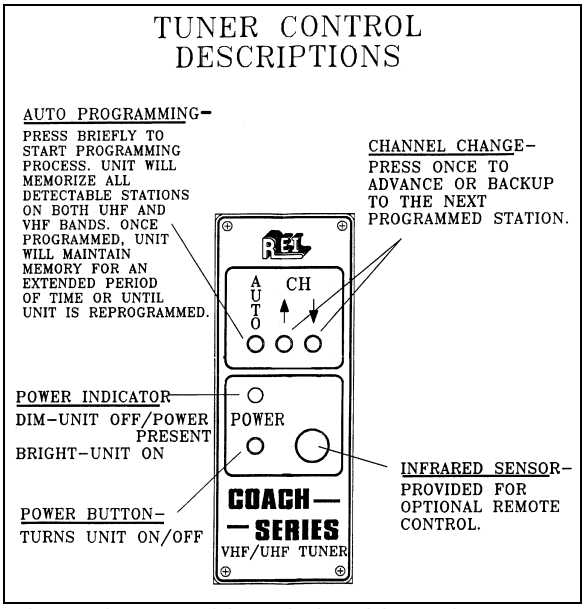

FIGURE 13: TUNER CONTROLS DESCRIPTION 23061

1.10 KARAOKE

The modified Panasonic DVD Player powers up automatically when the video system is activated. The unit can be controlled with the plug-in remote control, or the control head, which has access to the PLAY and STOP commands.

If so equipped, instructions for proper use of the Karaoke system are included in the *''Operating Manual''* that is provided in the technical publications box delivered with the vehicle.

1.10.1 Karaoke Panasonic Sound System – MOBILE DVD PLAYER DV1500

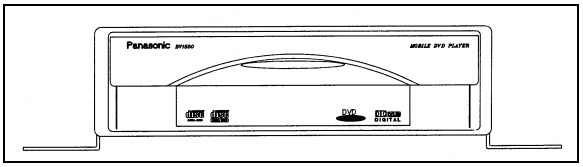

FIGURE 14: MOBILE DVD PLAYER DV1500 23214

1.11 DRIVER'S SPEAKERS

The driver's speakers are mounted one on each side. This arrangement provides the driver with clear stereo sound. Controls for the driver's audio allow selection between the radio and the auxiliary audio (independent of the passenger's speakers) or muting the speakers.

1.12 MONITOR

For monitor adjustment, refer to figure 15.

1.12.1 Removal

The front and side, ten-inch color monitors are slide mounted and retained by key locks. A LED indicator is provided on the back to indicate when the unit is ''ON''. The red button is the monitor ON/OFF switch and the pin style button is the circuit breaker reset button.

1. Place the battery master switch in the ''OFF'' position.
2. Unlock the monitor slide and pull towards the front of the monitor.
3. After removal, cover mount location using the monitor cover assembly and lock.

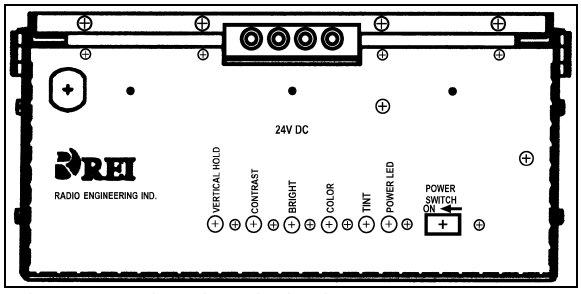

FIGURE 15: MONITOR HOUSING REAR PANEL 23333

1.12.2 Installation

1. Remove monitor cover assembly located over mounting bracket if needed.
2. Align the monitor mount with the slide and slide monitor into place.
3. Lock the monitor or cover to prevent removal.

NOTE
Make sure connections are not bent or damaged. If monitor is not being replaced, immediately install the mounting cover.

1.13 SCENIC VIEWING SYSTEM

The scenic viewing system enables the passengers to view the road ahead of the vehicle. This system is composed of a camera, a dashboard mounted ON/OFF switch and the audio – video switching box located in the first parcel compartment on the driver's side (Figs. 16 & 17).

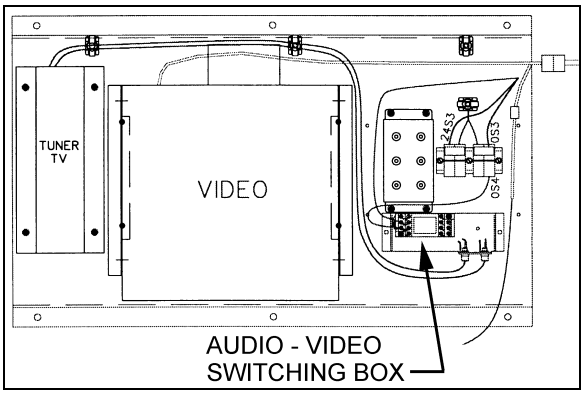

FIGURE 16: INSTALLATION IN PARCEL COMPARTMENT 23333

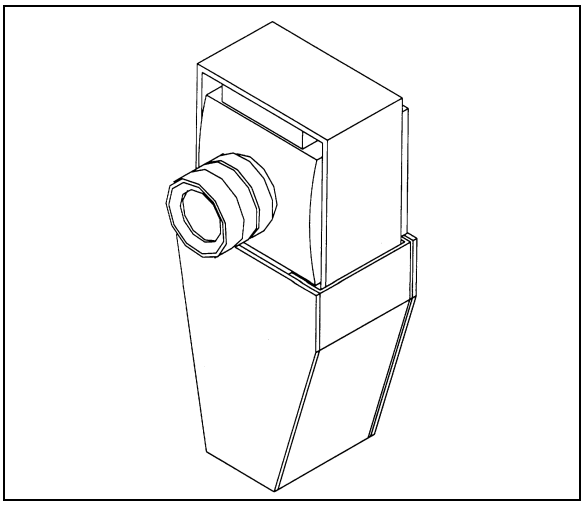

FIGURE 17: SCENIC VIEW CAMERA 23221

1.14 ROOF ANTENNA INSTALLATION

1. Find the desire location and drill a hole according to specification.

2. To remove dirt and grease, wash hole edge with alcohol.
3. If so equipped, remove foam padding ring from antenna to free the metal surface (foam can produce air bulbs in new rubber seal).
4. With SIKA 205, wash the edge of the hole and the antenna base surface, wait at least two (2) minutes for chemical evaporation.
5. Apply new seal SIKA 221 on both, edge of the hole and antenna base.
6. Fix the antenna in place.
7. Remove excess seal and complete a finishing joint all around the antenna base.

2. HUBODOMETER

2.1 DESCRIPTION

An optional wheel hubodometer (Fig. 18) may have been installed on the R.H. side of the drive axle. It indicates the total distance in miles or kilometers covered by the coach since it has left the factory, including road testing.

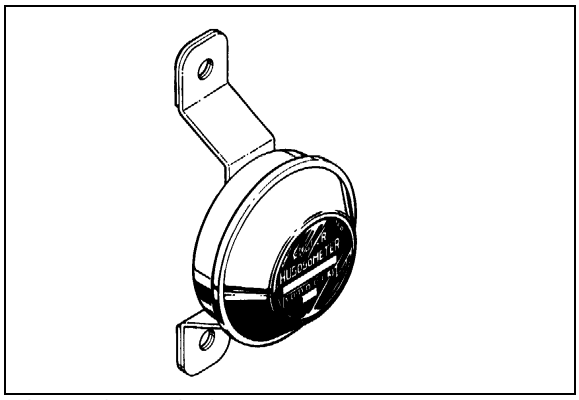

FIGURE 18: HUBODOMETER 23024

2.2 OPERATION

The hubodometer is calibrated for a specific wheel size (diameter). Wheel rotation causes a mechanism inside the hubodometer to record distance after a predetermined number of rotations. The unit should be serviced at a competent speedometer repair facility.

NOTE
Do not use paint, solvent or thinner on hubodometer face or on plastic hubcaps. Do not weld on hubodometer.

2.3 REMOVAL

To remove the unit, remove the two lock nuts and washers securing it to the wheel hub, and pull the unit off the studs.

2.4 INSTALLATION

Place the hubodometer unit over the wheel hub studs. Replace the lock washers and nuts. Torque stud nuts to 110-165 Lbf-ft·(150-225 Nm).

3. BACK-UP CAMERA AND MONITOR

An optional back-up camera is available which provides the driver with visual assistance when backing-up. The camera is automatically activated when the transmission is put in reverse gear and the ignition switch is "ON". The TV monitor is mounted on top of the dashboard. Refer to the Operator's Manual under "Controls & Instruments".

4. COLD STARTING AID (ETHER)

The vehicle can be equipped with an electrically-operated type ether cold starting aid designed to ease engine starting when temperature is low.

On vehicles equipped with cold starting aid, the system consists of the main following parts:

- Ether starting aid switch
- Ether cylinder
- Solenoid valve (24 V)
- Thermal cutout valve
- Atomizer

The control rocker switch is located on the dashboard. This switch is provided with a locking mechanism to avoid accidental use when engine is running. To activate the ether starting aid, proceed as follows:

1. Prior to cranking engine, press down rocker switch for three seconds to fill solenoid valve.
2. Release switch to discharge shot.
3. Allow three seconds for shot to discharge.
4. Start engine, use additional shots if necessary to keep engine running.

⚠ CAUTION ⚠
This practice should be performed only when absolutely necessary. Excessive use

of fluid could result in serious engine damage.

The ether cylinder and solenoid valve assembly are mounted on the engine compartment wall and are accessible from the engine compartment R.H. side door.
The thermal cutout valve is mounted on the engine (radiator side). Its function is to prevent discharge of ether when engine is warm (over 90 F (32 C)). The atomizer is installed on top of the air intake duct (Fig. 19).

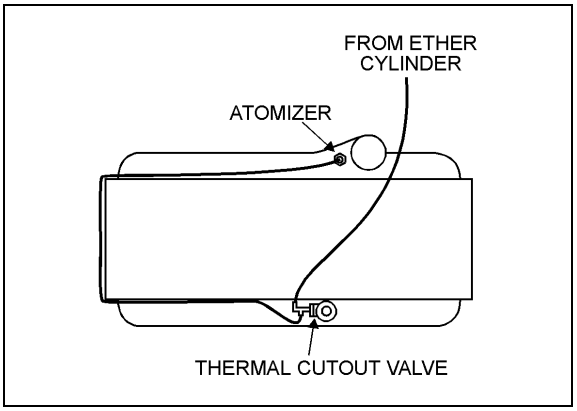

FIGURE 19: ENGINE 23032

4.1 PREVENTIVE MAINTENANCE

During the summer months, remove cylinder to avoid high temperature actuation of the cylinder safety relief device. Always screw valve cap into solenoid valve opening to prevent entrance of road dirt. When removing cylinder, be careful to prevent dirt from entering the valve.

4.2 TROUBLESHOOTING (IF SYSTEM IS NON-FUNCTIONING)

⚠ WARNING ⚠

During the following test, direct free end of tube away from personnel and all sources of ignition as this fuel is extremely flammable. Avoid breathing vapors and contacting fuel with skin. Never smoke during test.

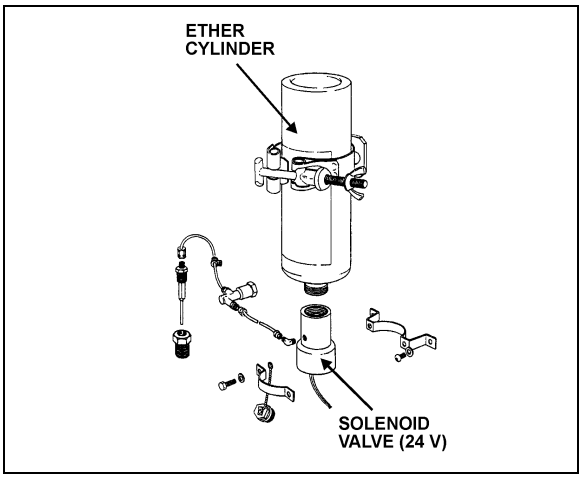

FIGURE 20: COLD STARTING AID 23048

1. Check cylinder for hand tightness and fuel supply (Fig. 20). Empty cylinder weight is approximately 17 oz (480 g); full cylinder weight is approximately 35 oz (990 g). If cylinder is empty, replace it. Before replacing cylinder, install new valve gasket in solenoid valve.
2. If still not functioning, disconnect tubing at solenoid valve fitting. Actuate solenoid valve. (Ask an assistant to actuate solenoid valve using the rocker switch on the dashboard).
   - If solenoid valve is non-functioning, check electric circuit, (refer to wiring diagrams). If sound, remove and replace the solenoid valve. If not, repair electric circuit.
   - If valve is functioning, reassemble valve fitting and connect tube. Disconnect tube at thermal cutout valve from port "Tube from valve".
3. Actuate the solenoid valve.
   - If fuel is not discharged from tube, remove tube and blow out or replace.
   - If fuel is discharged, connect tube to thermal cutout valve, and disconnect other tube.
4. Actuate the solenoid valve.
   - If fuel is not discharged, replace the cutout valve.

NOTE

If engine coolant temperature is 90°F (32°C) or over, it is normal that fuel is not discharged as the valve is in closed position.

- If fuel is discharged, connect tube to thermal cutout valve, and disconnect tube from atomizer.

5. Actuate the solenoid valve.
   - If fuel is not discharged from tube, fuel line is clogged. Remove tube and blow out or replace.
   - If fuel is discharged, replace the atomizer.

5.3 THERMAL CUTOUT VALVE QUICK TEST

1. Engine coolant temperature must be below 90 F (32 C).
2. Temporarily disconnect tube at thermal cutout valve from port *"Tube to atomizer"*.
3. Actuate solenoid valve (Ask an assistant to actuate solenoid valve by means of the rocker switch on the dashboard). Fuel should be discharged through the thermal cutout valve.

⚠ WARNING ⚠

Avoid breathing vapors and contacting fuel with skin. Never smoke during test.

4. Reconnect tube to thermal cutout valve.
5. Start engine, using cold starting aid if necessary. Stop engine when it reaches operating temperature.
6. Disconnect tube at thermal cutout valve as in step 2, and repeat step 3. No fuel should be discharged.

5. DESTINATION SIGN

DESCRIPTION

The destination sign is located at upper front of the vehicle. Two models are available.

5.1 ELECTRICAL DESTINATION SIGN (OPTIONAL)

The lighting is provided with a fluorescent tube, which is activated by means of a rocker switch located on the dashboard. The destination sign is electrically operated; two rocker switches mounted side by side on the destination sign control its motor. The unwinding speed control switch determines the rolling speed without actuating it. The selecting switch (momentary type) controls and actuates the rolling direction (fig. 21).

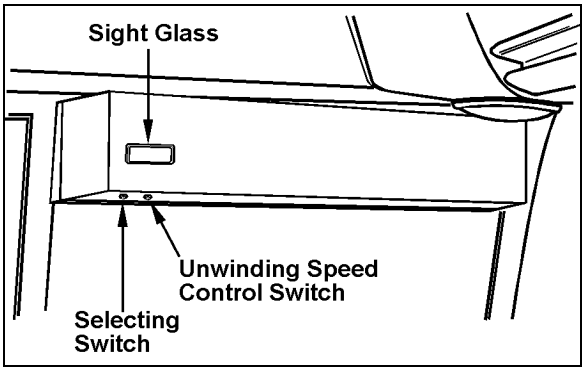

FIGURE 21: DESTINATION SIGN – ELECTRICAL 23122

5.1.1 Maintenance

Inspect the following items regularly:

1. Check for free and easy mechanism movement.
2. Check for loose items on the sign mechanism, such as wire, loose clips, hanging tape, etc.
3. Check tension and condition of the two drive belts and replace as required.
4. Periodic lubrication is **NOT** recommended.

5.1.2 Destination Sign Light Replacement

Refer to Section 06, Electrical System, paragraph "*13.4.7 Destination Sign Light - Bulb Removal and Replacement*" and "*13.4.8 Destination Sign - Fluorescent Removal and Replacement*".

5.1.3 Electric Motor Removal and Installation

To remove the electric motor:

1. Remove the six Phillips-head screws and washers retaining the destination sign cover, and then carefully remove the cover from its location.
2. Disconnect wires from electrical motor.
3. Remove both screws retaining motor to destination sign frame (Fig. 22).
4. Slide motor upwards, and then remove the drive belt.
5. Remove motor through the opening intended for this purpose.

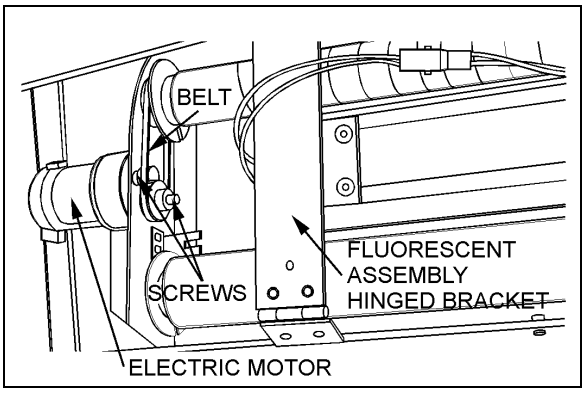

FIGURE 22: DESTINATION SIGN-ELECTRIC MOTOR 23034

6. Install the motor by reversing the above procedure.

5.1.4 Sign Curtain Repair

In the event a destination sign curtain is torn, it can be repaired with 3M polyester tape or any equivalent cellophane tape. When repairing a tear, the tape should be used on both sides of the curtain.

5.2 ELECTRONIC DESTINATION SIGN (OPTIONAL)

To change the destination, depress the selecting switches until the desired destination appears in the LCD display.

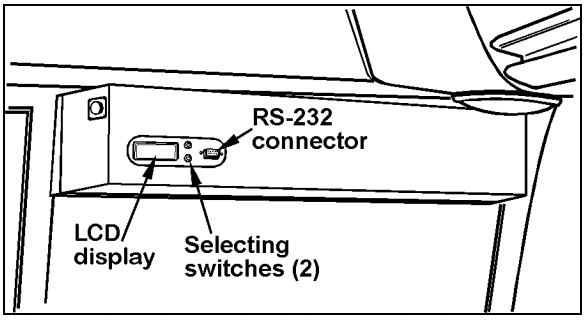

FIGURE 23; DESTINATION SIGN – ELECTRONIC 23123

NOTE
The destination sign must be programmed with a computer connected to the RS-232 connector prior to first use. Follow the instructions on the computer disk to install and run the software.

NOTE
All destination sign models are equipped with lights (bulb light or fluorescent) which illuminates automatically when the headlight or fog light switch is activated.

6. LAVATORY

6.1 DESCRIPTION

The lavatory is located in the rear R.H. corner of the coach. It is equipped with a chemical flush toilet, bathroom tissue dispenser, washbasin, towel dispenser, waste container, mirror, ashtray, and a cleaning cabinet. A liquid soap dispenser and moist towel dispenser are optional.

Locking the lavatory door from the inside will illuminate a fluorescent light in the lavatory and two outside signs to indicate occupation. One sign is located on the outer wall of the lavatory and another sign is located over the windshield. An indicator light on the dashboard will illuminate to inform the driver when the lavatory is occupied. A night-light is permanently lit in the lavatory when the ignition switch is in the ON position.

If emergency assistance is required, the lavatory occupant can actuate a buzzer that will sound in driver's area. The buzzer's push-button (c/w instruction label) is located on the inner curbside wall of lavatory.

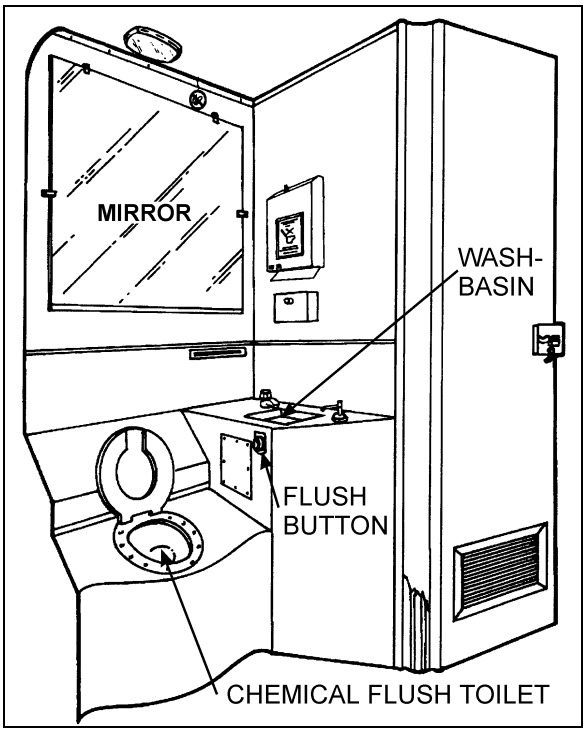

FIGURE 24: LAVATORY 23335

The lavatory has it's own ventilation system that operates only when ignition switch is in the "ON" position. An auxiliary sump tank (Fig. 28) (optional) allows main tank to be drained by manually opening an interconnecting tank valve

(5, Fig. 27). Lavatory can then be operated for longer periods until coach can be serviced at a facility equipped for disposal.

The fresh water tank, located behind compartment mirror (Fig. 28), is equipped with a thermal drain valve that will drain the tank when water temperature approaches the freezing point preventing damage to the tank (Fig. 28). The fresh water supplies water to the washbasin by gravity. Two tubes are connected on top of the tank. One serves as overflow as well as a vent tube and runs along the curbside wall to the engine R.H. side compartment (6, Fig. 27) while the other tube is connected to the fresh water fill connection which is also located in engine R.H. side compartment (1, Fig. 27). A third tube connected in the bottom of the fresh water tank allows fresh water to flow to the washbasin faucet. Water from washbasin drain tube flows to the main sump tank.

Also, a drain hole located on lavatory floor drain water splashed on the floor to the engine R.H. side compartment.

6.2 MAINTENANCE

The servicing procedure for the lavatory is described in the *"Operator's Manual"* included in the technical publications box delivered with the vehicle.

6.3 VENTILATION FAN

6.3.1 Description

The lavatory ventilation fan, mounted in engine compartment behind the oil reserve tank (Fig. 25), serves two purposes. It exhausts objectionable odors and provides a constant air circulation in the lavatory compartment by heating or cooling the lavatory with the vehicle ambient air. Air flows in the lavatory compartment through a vent grill located on the lavatory door and exhausts through a grill located next to the toilet.

NOTE
This fan runs constantly when the ignition switch located on the dashboard is in the "ON" position.

6.3.2 Maintenance

The frequency of preventive maintenance should be determined according to vehicle mileage and operating conditions. However, it is recommended to check this item every 50,000 miles (80 000 km) or once a year, whichever comes first.

Remove fan and motor assembly. Check for fan housing wheel and motor free operation. When defective motor occurs, new motor must be installed.

6.3.3 Removal and Installation

1. With the engine compartment rear doors opened, remove hose clamp securing duct to ventilation fan inlet, and disconnect duct.
2. Disconnect the ventilation motor wiring connector.
3. Remove the support bracket screw. Remove the three bolts fixing the ventilation fan housing support. Remove the ventilation fan assembly from its location.
4. The unit can now be disassembled and motor replaced.
5. Reverse previous steps to reinstall ventilation fan assembly on vehicle.

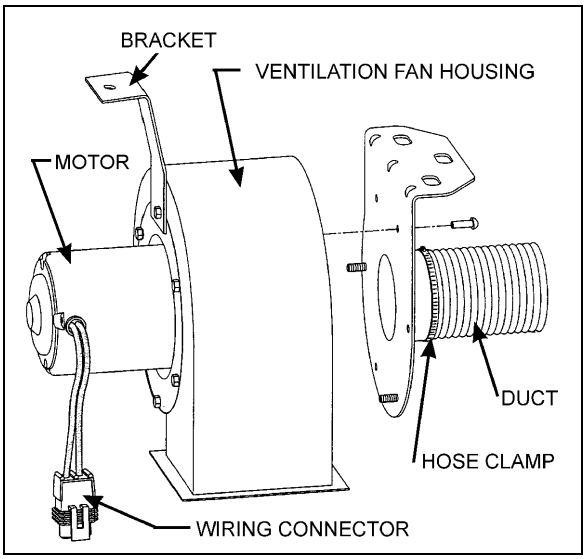

FIGURE 25: VENTILATION FAN INSTALLATION 23222

6.4 DOOR LOCK

Lavatory door lock has inside and outside handles, as well as an inside latch to lock door from inside the compartment. If the lock fails to release, the door can be opened from the outside using a special key which is supplied to the driver. Lock assembly can be removed from the door, then readily disassembled and parts replaced, if necessary (Fig. 26). A thin coat of lubricant on all moving parts will ensure trouble-free operation.

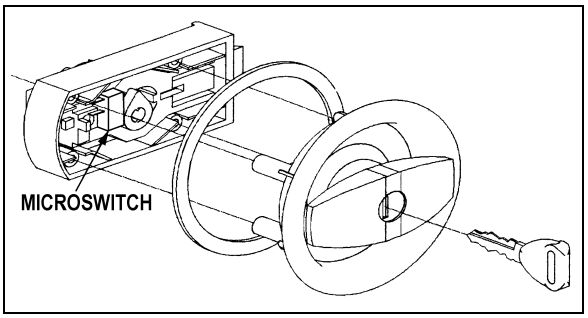

FIGURE 26: DOOR LOCK 23320

6.5 LAVATORY LIGHT

The lavatory light is installed on ceiling. A microswitch, which is mounted inside the latch housing, is activated by the door lock mechanism upon locking to energize the circuit. This switch is readily serviced by removing the four Phillips-head screws securing the housing to the door interior frame.
Proceed as Section 06, Electrical System, *Dome, Rear Roof and Lavatory Lights*" for lights replacement.

6.6 LAVATORY NIGHT-LIGHT

The lavatory night-light is illuminated as soon as the ignition switch is set to the *"ON"* position. See Section 06, Electrical System, "*Parcel Rack / Lavatory Night Light - "Bulb Removal and Replacement*" for lights replacement.

6.7 EMERGENCY BUZZER

The lavatory emergency buzzer is mounted on the inner curb side wall of lavatory and sounds when the emergency call push-button switch in the lavatory compartment is activated. For specific wiring information, refer to wiring diagrams. To remove the emergency call push-button switch, proceed as follows:

1. Remove both phillips-head screws retaining pushbutton switch plate to wall.
2. Remove steel plate located on L.H. side of pushbutton switch.
3. Remove switch through this opening, taking care to disconnect electric wires.

6.8 FRESH WATER TANK

One panel allows access to the fresh water tank. It is located behind the toilet mirror. Remove the tank as follows:

1. Remove the mirror.
2. Remove the fresh water tank tubings, bolts, and different connectors.
3. Remove the tank from the wall.
4. Reverse previous steps to reinstall fresh water tank assembly on vehicle.

6.8.1 Fresh Water Tank Draining

The fresh water tank can be drained by simply opening the fresh water drain cock (Fig. 27). Don't forget to close cock when draining is done.

NOTE
The fresh water reservoir is equipped with a thermal valve which is set to open at about 35°F, thereby automatically draining the reservoir in near-freezing temperatures.

Routine draining and filling of lavatory tanks should be performed by maintenance personnel only. If engine or heating failure occurs in extreme weather conditions, emergency draining of water tanks should be performed under the most suitable conditions and should at all times be supervised by driver.

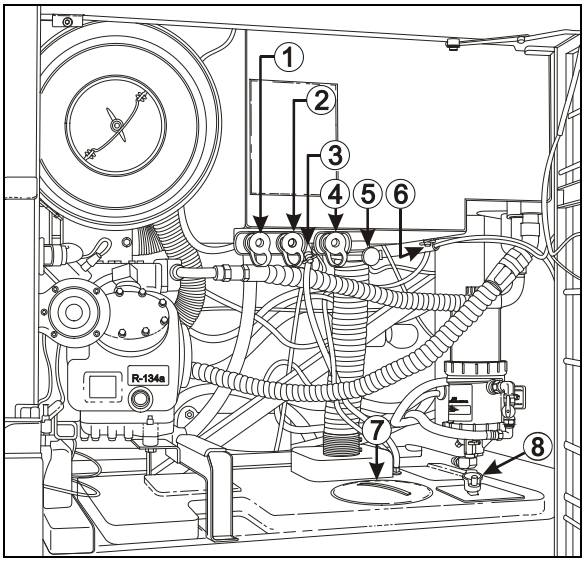

FIGURE 27: F/W TANK SERVICE VALVES 23317

1.....Fresh water tank fill connection
2.....Main sump tank fill connection
3.....Main sump tank overflow cock
4.....Cleaning kit hose connector
5..... Main sump tank drain valve
6.....Fresh water tank drain cock
7..... Auxiliary sump tank access cap
8.....Auxiliary sump tank drain valve

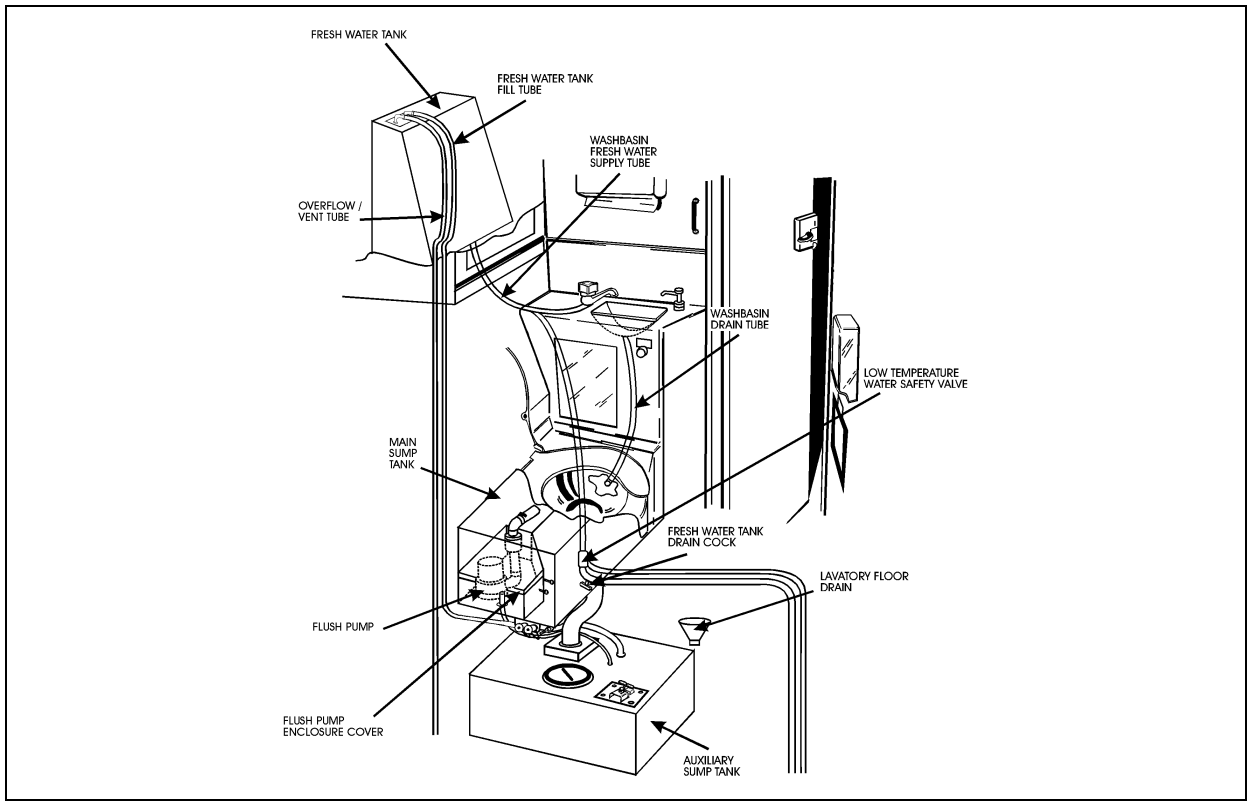

FIGURE 28: FUNCTIONING OF LAVATORY 23051

6.8.2 Fresh Water tank Filling

Connect the fresh water supply hose to the fresh water reservoir fill connection (Fig. 27) located in the curb-side engine compartment. Fill the reservoir until the overflow tube leaks, signaling that the reservoir is full.

⚠ WARNING ⚠

Never put antifreeze in fresh water tank; antifreeze is toxic.

⚠ WARNING ⚠

If tank has not been drained for an extended period of time, draining and filling operations must be repeated three (3) times in order to clean tank and eliminate contaminated water.

6.9 LIQUID SOAP DISPENSER

A liquid soap dispenser may have been installed as optional equipment. To refill dispenser, proceed as follows:

1. Turn cover slightly clockwise until it stops.

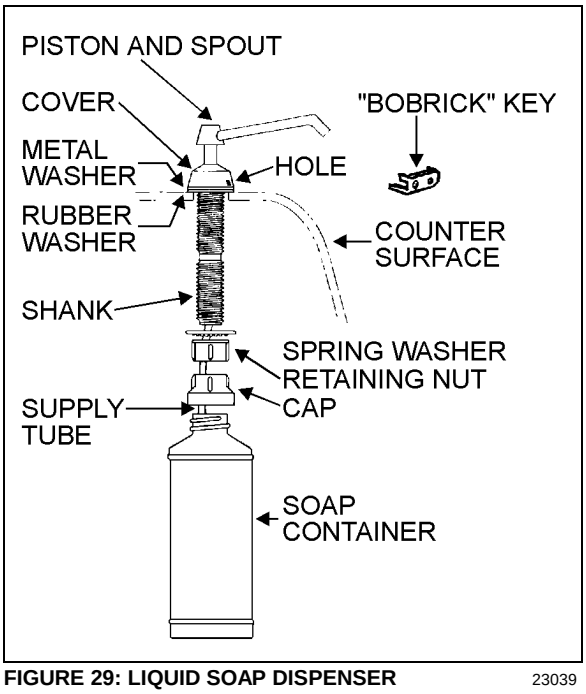

FIGURE 29: LIQUID SOAP DISPENSER 23039

2. Lift out piston and spout, cover and supply tube.
3. Fill dispenser with soap. This model can dispense vegetable oil soaps, synthetic detergents, and lotion soaps.

⚠ CAUTION ⚠

Never use abrasive cleaners.

4. Replace supply tube, piston, and spout mechanism reversing the steps above.
5. Secure the cover by turning clockwise until lock snaps into position.

NOTE

The dispenser requires priming when extremely viscous lotion soaps are used. Remove piston and spout, cover and supply tube assembly. Pump water into assembly, then replace into dispenser.

6.10 FLUSH PUSH-BUTTON

The green flush push-button is located near the toilet. Press on push-button to actuate a pneumatic timer located on the other side of wall. This timer allows an electric current flow during a preset time to a pump into the sump tank.

6.10.1 Pneumatic Timer Removal and Installation

1. Unscrew and remove the flush push-button locking ring.
2. Remove steel plate located on L.H. side of pushbutton switch.
3. Remove pneumatic timer through this opening, taking care to disconnect electric wires.

NOTE

Care must be taken to avoid losing the spacers installed on the mounting sleeve.

4. Reverse the above procedure to reinstall timer. The recommended torque for the lock nut is 15 Lbf-ft· (21 Nm).

6.10.2 Timer Adjustment

Timer can be adjusted from 0.2 second to 3 minutes by turning the time adjustment screw clockwise to increase time, and counterclockwise to decrease time. To gain access to the time adjustment screw, repeat steps 1, 2 and 3 in the previous paragraph "*6.10.1 Pneumatic Timer Removal and Installation*".

6.11 FLUSH PUMP

The submersible-type flush pump is mounted inside an enclosure in the sump tank (Fig. 28). The enclosure is provided with a screened side which, serves as a strainer to prevent solid matters from entering the pump.

The pump requires no periodic maintenance other than cleaning of the strainer side using a water jet introduced through the circular cap opening, once the sump tank is completely drained. The pump can run dry periodically without damage. However, for maximum seal life, the run dry periods should be kept to a minimum.

⚠ CAUTION ⚠

If vehicle is stored for an extended period of time, make sure to clean the strainer as solid matter will tend to pack, and will necessitate replacement of strainer.

6.11.1 Flush Pump Removal

1. Remove the toilet to gain access to the pump enclosure.
2. Remove the flush pump enclosure cover
3. Unsnap the flush pump.

6.12 SUMP TANKS

6.12.1 Main Sump Tank Draining

When recirculating water in the toilet is soiled, drain main sump tank. If equipped with the optional auxiliary sump tank, drain the main sump tank contents into the auxiliary tank and perform the filling procedure of the main tank.

6.12.2 Main Sump Tank Filling

Open the main sump tank overflow cock and connect a water supply hose to the toilet sump tank fill connection. The main tank is full when water starts flowing through the clear overflow tube. Close main sump tank overflow cock when the tank is full.

⚠ CAUTION ⚠

In cold weather, add 2 gallons (9 liters) of antifreeze (e.g.: ethylene glycol) in the toilet before filling main tank.

6.12.3 Auxiliary sump Tank Draining

Remove drain cap located under auxiliary sump tank then turn the auxiliary sump tank drain valve lever counterclockwise eight or nine times. Remove the access cap and flush tank with clean water. To close, turn the valve lever several times clockwise until the rubber bladder seals the drain hole. Reinstall access and drain caps.

⚠ CAUTION ⚠

Lavatory tanks should be serviced only at suitably equipped stations.

NOTE

It is unlawful to dump sump tank contents in any location other than those designated as such.

When a full draining is required, clean main tank by repeating the draining and filling operations while leaving the auxiliary sump tank drain cock opened. Close cocks and pour a pack of commercial toilet deodorant (Prévost part #900329) in toilet before adding the antifreeze and starting final filling of main tank.

⚠ WARNING ⚠

The toilet deodorant contains products that can be very irritating to skin. Use rubber gloves when handling and then clean toilet seat.

⚠ WARNING ⚠

Antifreeze must comply with the effective environmental act.

⚠ CAUTION ⚠

When cold weather is expected and there is no antifreeze in the tank, both sump tanks must be drained.

NOTE

If there is no antifreeze solution in the tank, there is less risk of freezing if engine is operating due to the heat it produces.

NOTE

New coaches are delivered with the sump and fresh water tanks empty. Fill with water before putting the coach in service.

7. AIR HORN VALVE

The air horn valve is located in the front service compartment and the air horn valve button is on the steering wheel center.

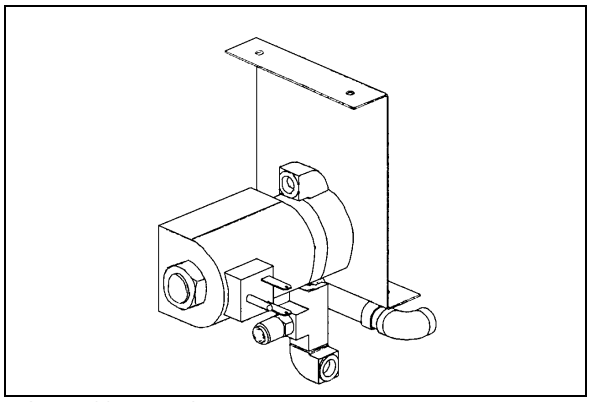

FIGURE 30: AIR HORN VALVE 23230

7.1 AIR HORN VALVE MAINTENANCE

When needed, the air horn valve can be serviced or replaced using the following procedure:

1. Unplug the cable connector;
2. Disconnect the air tubes;
3. Loosen the retaining bolts;
4. Service or replace the air horn valve;
5. Reinstall by reversing procedure.

8. WINDSHIELD WIPERS AND WASHERS

8.1 GENERAL DESCRIPTION

NOTE

When installing a wiper motor, arm or blade, follow recommended procedures to prevent misalignment, binding or malfunction. Check the windshield washer liquid hoses, fittings and connectors to be sure they are properly connected and seal with no restriction to the flow of washer liquid. Check that wiper arms have the proper sweep position and the washer nozzles are aimed so that spray is within the proper wiper pattern.

The windshield wipers are controlled by one electric wiper motor that is accessible for maintenance after removing the appropriate access panel beside the footwell (refer to figure 31).

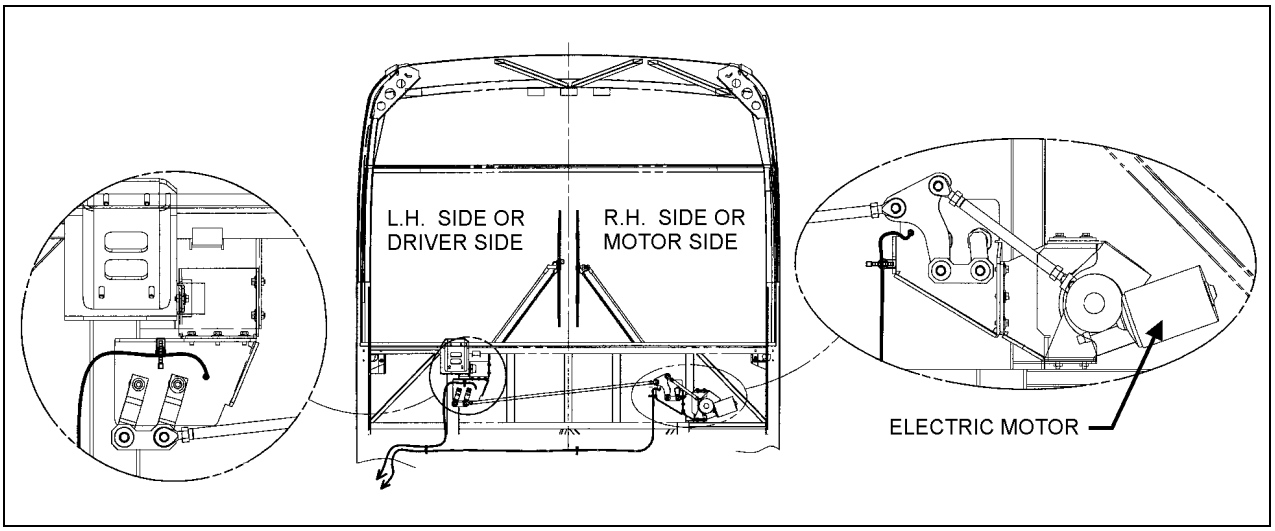

FIGURE 31: WINDSHIELD WIPER INSTALLATION 23287

Turn the multifunction lever forward to activate windshield wipers (item 2, fig. 32). The first position operates the wipers at low speed and the second position operates the wipers at high speed. Turning the lever backwards will operate the wipers in the intermittent mode.

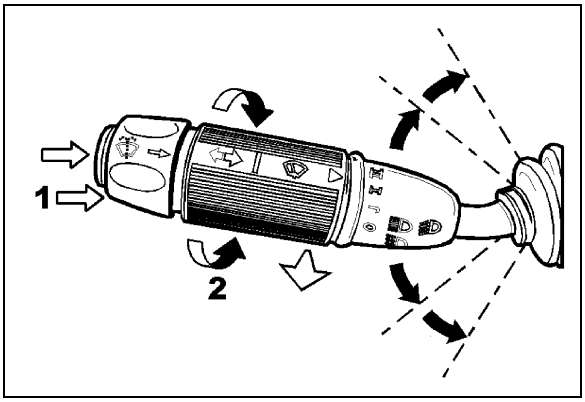

FIGURE 32: MULTIFUNCTION LEVER 23133

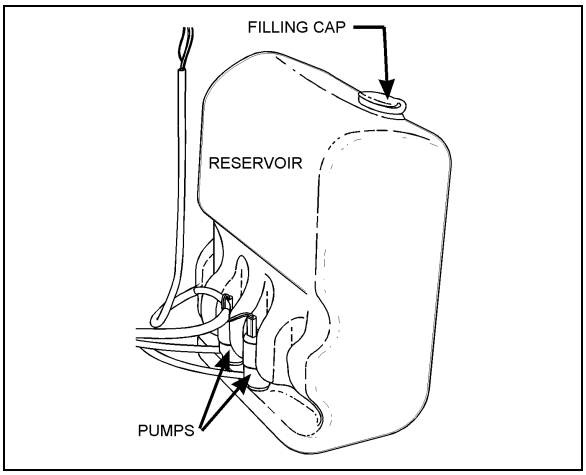

FIGURE 33: WINSHIELD WASHER RESERVOIR 23220

The windshield washer pumps are electrically operated and are controlled by a washer control ring on the multifunction lever (item 1, fig. 32).

The windshield washer reservoir is located in the front service compartment (Fig. 33). This unit pumps the washer liquid to the spray nozzles where it is dispersed across the windshield.

8.2 WIPER ARM

Check operation of the wipers for proper blade sweep and angle.

⚠ CAUTION ⚠

Do not attempt to manually move the wiper arms to make wiper blade sweep adjustments as damage to the wiper linkage or motor may occur. If it is necessary to adjust the sweep of blades, remove the arms and make adjustment by positioning the arms using serration on the wiper arm pivot shafts.

8.2.1 Wiper Arms Positioning

1. Reinstall the wiper arms and position as shown in figure 38. Before positioning the wipers at their final position, tighten the nuts to 9 Ft-lbs (12 Nm) at first.
2. To find the final position of the wiper arms, lift then release the wiper arm so if falls back on the windshield

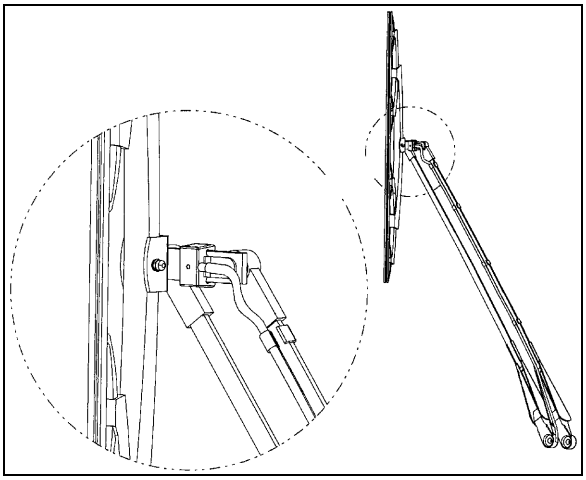

FIGURE 34: WINDSHIELD WIPER (MOTOR SIDE) 23335

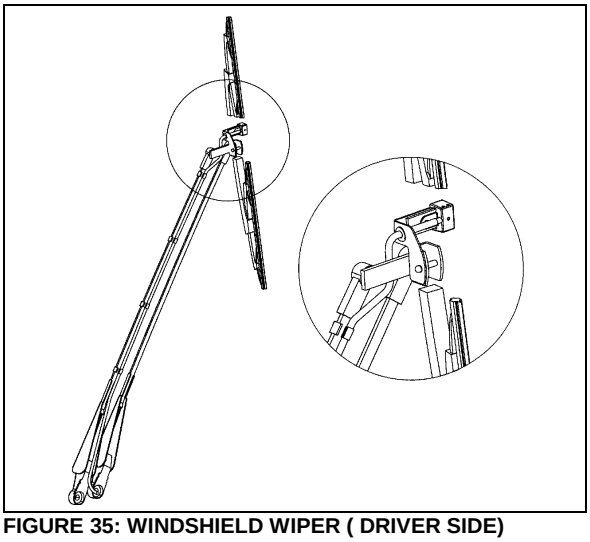

FIGURE 35: WINDSHIELD WIPER (DRIVER SIDE) 23334

3. When the final position is found, tighten the wiper arm nuts to 22 Ft-lbs (30 Nm). Wait 30 minutes and tighten again to 22 Ft-lbs.

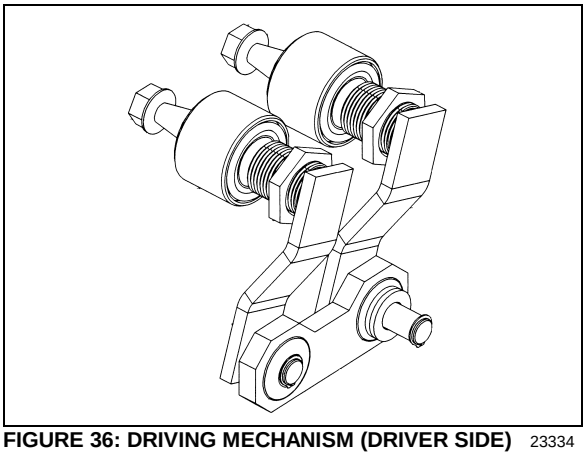

FIGURE 36: DRIVING MECHANISM (DRIVER SIDE) 23334

4. Lower the protective cover.
5. Connect the windshield washer tubing at the base of the wiper arm.
6. Check the adjustment on a wet windshield.

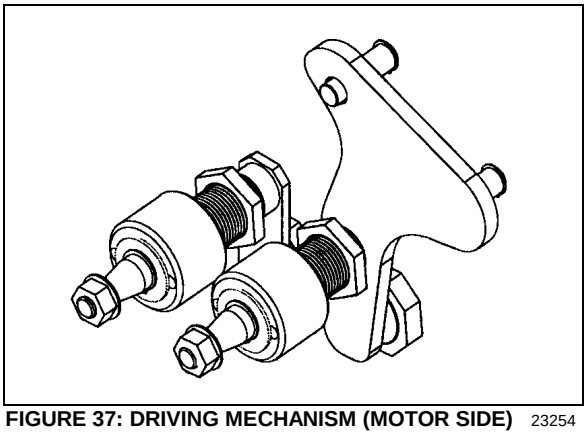

FIGURE 37: DRIVING MECHANISM (MOTOR SIDE) 23254

8.3 WINDSHIELD WIPER MOTOR

8.3.1 Windshield Wiper Motor Replacement

The windshield wiper motor is located at lower front of the vehicle, behind the defroster panel. Refer to figure 31 for motor location.

⚠ WARNING ⚠

Park vehicle safely, apply parking brake, stop engine and set battery master switch to the ''OFF'' position prior to working on the vehicle.

1. Remove the Phillips-head screws retaining the defroster panels, and remove panels.
2. Disconnect wiring connector from the windshield wiper motor.
3. Loosen clamping screw retaining the lever at the end of the motor driving shaft.
4. Remove the three bolts holding the motor to the steel plate.
5. Remove the windshield wiper motor (Prévost #800328), reverse removal procedure to reinstall.

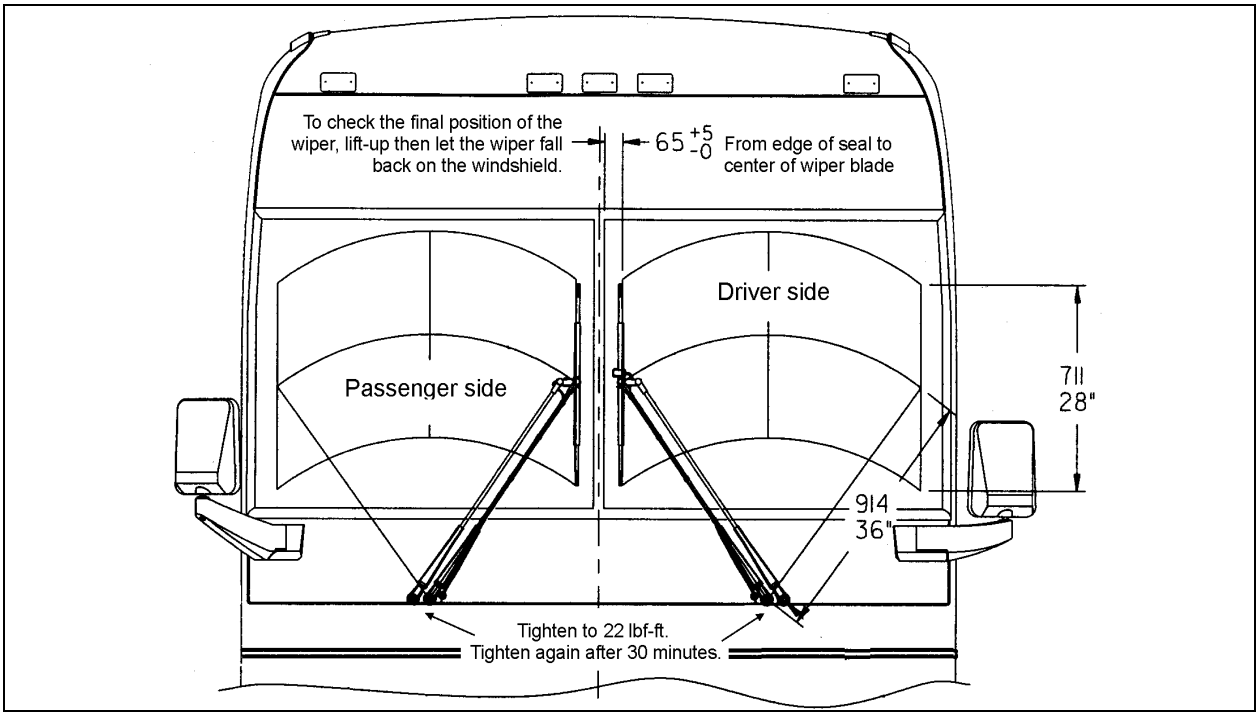

FIGURE 38: WIPER ARMS POSITIONING 23253

8.4 TROUBLESHOOTING

SYMPTOM	PROBABLE CAUSE	REMEDY
FAIL TO SPRAY WASHER FLUID	A. Reservoir empty. B. If below 32°F (0°C), improper washer fluid frozen. C. Contamination in tubing or nozzles. D. Tubing damage. E. Tubing bent (kinked) or off one or more connections.	A. Add proper fluid. B. Store coach or parts in heated area, then purge system with low-temperature solution. C. Remove with compressed air, if severely clogged, replace items. D. Replace section. E. Realign tubing and/or refit. Trim end to ensure proper fit or replace.
INADEQUATE SPRAYING	A. Tubing failure.	A. Replace tubing.
SLOW OPERATION	A. Improper solution. B. Jet stream improperly directed. C. Check if valve is stuck in the open position.	A. Replace with proper type solution. B. Reposition nozzles. C. Remove, clean or replace.

9. SPECIFICATIONS

AMPLIFIER

Make..... R.E.I.
Model..... AMP-3000
Power source ..... 24 volts DC Negative ground
Current ..... 8 Amps maximum
Frequency Response ..... 10-30,000 Hz
Output..... 90 watts/channel maximum power
..... 65 watts/channel RMS at 4 ohm @ 0.5 T.H.D.
Signal to noise ratio..... 86 dB
Supplier number..... 700771
Prévost number..... 901056

AM/FM RADIO CASSETTE PLAYER

Make..... Panasonic
Model..... CQ-R145CAHH
Power source ..... 12 volts
Supplier number..... 700760
Prévost number..... 901032

8 DISC CD CHANGER

Make..... R.E.I.
Supplier number..... 700739
Prévost number..... 901057

AM/FM RADIO CD PLAYER

Make..... Panasonic
Model..... CP-DP101U
Power source ..... 12 volts
Supplier number..... 700788
Prévost number..... 901053

SPEAKER

Make..... Robert Bosch
Max. power..... 90 watts
RMS power..... 40 watts
Freq. response ..... 45 Hz - 24 kHz
Sensitivity ..... 92 dB
Impedance..... 4 ohms
Supplier number..... RPSPKR54
Prévost number..... 900765

CONTROL HEAD

Make..... R.E.I.
Model..... C-2000
Supplier number..... 700227
Prévost number..... 900803

VIDEO CASSETTE PLAYER (VCP)

Make..... R.E.I.
Model..... V-3000
Supplier number..... 700749
Prévost number..... 901030

BOOM-TYPE MICROPHONE
Make..... R.E.I.
Supplier number 480076BK
Prévost number 900763

HANDHELD PRIORITY MICROPHONE
Make..... R.E.I.
Supplier number 480015
Prévost number 900808

RUBBER COATED MICROPHONE
Make..... R.E.I.
Supplier number 480228
Prévost number 900745

16 CHANNEL WIRELESS MICROPHONE
Make..... R.E.I.
Supplier number 700598
Prévost number 900954

16 CHANNEL WIRELESS MICROPHONE CHARGING STATION
Make..... R.E.I.
Supplier number 700532
Prévost number 900953

16 CHANNEL WIRELESS MICROPHONE RECEIVER
Make..... R.E.I.
Supplier number 700599
Prévost number 900952

TV TUNER
Make..... R.E.I.
Power source 24V
Supplier number 700471
Prévost number 900814

KARAOKE
Make..... Panasonic
Model..... MOBILE DVD PLAYER DV1500
Supplier number 700761
Prévost number 901033

TV MONITOR
Make..... R.E.I.
Power source 24V
Supplier number 700800
Prévost number 901070

HUBODOMETER (US model: miles)
Make..... Stemco
Supplier number 650-0593
Prévost number 650002

HUBODOMETER (Canada model: km)

Make....Stemco
Supplier number....650-0025
Prévost number....650117

ELECTRIC DESTINATION SIGN (FLUORESCENT TUBE)

Make....General Electric
Length....30" (76 cm)
Outside diameter....1" (25 mm)
Wattage....20
Color....Cool white
Quantity....1
Supplier number....F30T8 CW4
Prévost number....830120

ELECTRONIC DESTINATION SIGN

Make....Pocatec
Supplier number....9000230
Prévost number....940050

LAVATORY VENTILATION FAN MOTOR

Make....Aurora
Type....RG500EF
Voltage....24 volts DC
Rotation....R.H.
Supplier number....131.40.50
Prévost number....870844

LAVATORY FLUORESCENT TUBES

Make....General Electric
Model....F15T8CW
Length....18" (45 cm)
Wattage....15
Quantity....2
Prévost number....830102

EMERGENCY BUZZER SWITCH (PUSH BUTTON)

Make....Cole Hersee Co.
Voltage....24 V
Supplier number....40224
Prévost number....562117

FRESH WATER TANK

Make....Prévost
Capacity....18 US gal (68 liters)
Prévost number....401591

FLUSH PUSH BUTTON PNEUMATIC TIMER

Make....Furnas
Type....Resettable
Time....0,2 to 180 seconds
Supplier number....55-AA
Prévost number....900348

FLUSH PUMP

Make..... RULE 2000
Model number ..... 12 - 24 V
Power source ..... 24 volts DC
Capacity..... 1450 GPH
Prévost number..... 900960

AIR HORN
Make.....Allied Signal Inc.
Supplier number..... 101493
Prévost number..... 640093

AIR HORN VALVE
Make.....Allied Signal Inc.
Supplier number..... 228672
Prévost number..... 640128

WINDSHIELD WIPER MOTOR
Make..... BOSCH
Supplier number..... 0390442401
Prévost number..... 800328

WIPER (BLADE)
Make..... BOSCH
Supplier number..... 3398110095
Prévost number..... 800329

WIPER ARM
Make..... BOSCH
Supplier number..... 6002UWA060
Prévost number..... 800331

SECTION 24: LUBRICATION

CONTENTS

1. LUBRICATION 24-2

1.1 FIRST SERVICE ON NEW VEHICLE 24-2
1.1.1 Differential 24-2
1.1.2 Coolant Strainer 24-2
1.1.3 Allison World Automatic Transmission 24-2
1.1.4 ZF-ASTRONICTransmission 24-2
1.1.5 Engine 24-2

2. LUBRICATION AND SERVICE SCHEDULE 24-3

2.1 ENGINE OIL CHANGE INTERVALS 24-3
2.1.1 Engine Oil Reserve Tank 24-3
2.2 COLD WEATHER OPERATION 24-3
2.3 FLEXIBLE HOSE MAINTENANCE 24-3
2.3.1 Pre-Starting Inspection 24-3
2.3.2 Leaks 24-4
2.3.3 Service life 24-4
2.4 WALK-AROUND INSPECTION 24-7
2.5 LUBRICATION AND SERVICING SCHEDULE 24-8
2.6 LUBRICANT AND COOLANT SPECIFICATIONS 24-8
2.7 PART NUMBER SPECIFICATIONS 24-9

ILLUSTRATIONS

FIGURE 1: ENGINE OIL RESERVE TANK 24-3
FIGURE 2: LUBRICATION AND SERVICING POINTS ON I-BEAM FRONT SUSPENSION VEHICLES 24-5
FIGURE 3: LUBRICATION AND SERVICING POINTS ON INDEPENDENT FRONT SUSPENSION VEHICLES 24-6

1. LUBRICATION

The efficiency and life expectancy of mechanical equipment is largely dependent upon proper lubrication and servicing. All mechanical components rely on a lubricating film between moving parts to reduce friction, prevent wear and oxidation. Proper lubrication also helps cool the parts and keep dirt particles away from mating surfaces. Efficient lubrication depends upon using the right type of lubricant, at specified intervals and by filling to correct capacities. Past experience shows that many service problems can be traced to an improper lubricant or to incorrect lubrication procedures.

A comprehensive maintenance and lubrication program is important to ensure the long service life this vehicle was designed for and to avoid costly repairs and associated downtime caused by premature part failure.

A lubrication schedule is included in this section to give the location of key service points on the vehicle as well as the lubricant specifications for each component to be serviced. Specific instructions on how to check and service different components are covered in their respective sections in this maintenance manual.

The recommended lubrication intervals are based on normal operating conditions and mileage accumulation.

Shorten the intervals if your vehicle operates in more severe conditions. Severe conditions include heavy towing, high vehicle weight or operation in mountainous areas. Some parts and equipment referred to in this section may not be installed on your vehicle. Check your vehicle's "Coach Final Record" for equipment list.

Dispose of used lubricants and filters in an environmentally safe manner, according to federal and/or local recommendations.

1.1 FIRST SERVICE ON NEW VEHICLE

Perform the following maintenance procedures after the first 3,000 miles (5 000 km) of operation (unless otherwise specified). Once initial maintenance is performed, refer to recommended intervals in the lubrication schedule.

Repeat a component's initial maintenance procedure when it has undergone a major repair.

1.1.1 Differential

No initial oil or filter change necessary. Refer to regular lubrication and servicing schedule.

1.1.2 Coolant Strainer

The coolant strainer is designed to recover the soldering residues trapped inside the coolant lines during their initial assembly; perform initial cleaning once vehicle has run approximately 3,000 miles (5 000 km), then according to the lubrication and servicing schedule.

NOTE
If additional soldering has been performed on any point of coolant piping, clean coolant system strainer as outlined for a new vehicle at 3,000 miles (5 000 km).

1.1.3 Allison World Automatic Transmission

Change main filter cartridge after first 5,000 miles (8,000 km) of initial operation, then change filters and fluid according to the lubrication and servicing schedule.

1.1.4 ZF-ASTRONICTransmission

No initial oil or filter change necessary. Refer to regular lubrication and servicing schedule.

1.1.5 Engine

Since engine break-in has been done in factory, there is no special break-in, so oil should be changed according to the lubrication and servicing schedule intervals. Since some oil consumption by engine is normal, check oil level daily with engine stopped and add to FULL mark on dipstick if necessary. Furthermore, the engine oil filter should be replaced each time the engine oil is changed.

2. LUBRICATION AND SERVICE SCHEDULE

Following this service schedule is the most economical and easiest way to ensure your vehicle performs at its best, safest and longest. Also, unscheduled maintenance will be minimized since inspection should expose potential problems before they become major ones.

2.1 ENGINE OIL CHANGE INTERVALS

The engine oil change intervals are related to the operating conditions, such as vehicle load, speed, etc., and may vary. It is recommended however, that the oil change be performed after every 12,500 miles (20 000 km).

The drain intervals may then be gradually increased or decreased with experience on a specific lubricant, considering the recommendations of the oil supplier (analysis of drained oil can be helpful), until the most practical service condition has been established.

Solvents should not be used as flushing oils. Dilution of the fresh refill oil supply can occur, which may be detrimental for the engine.

Engine oil temperature should be checked every 25,000 miles (40 000 km) to determine oil cooler efficiency. This check should be made by inserting a steel jacketed thermometer in the dipstick opening, immediately after stopping a hot, loaded engine. If the oil temperature exceeds the coolant temperature by more than 60 °F (33 °C), the oil cooler may be clogged.

For detailed oil specifications, refer to *"Detroit Diesel Series 60 Service Manual"* under heading *"Lubricating Oil for Detroit Diesel Engines"*.

2.1.1 Engine Oil Reserve Tank

An oil reserve tank with a capacity of 8.4 US quarts (8,0 liters) (optional) is connected to the crankcase by a hose with a shutoff valve, allowing oil to be added to crankcase by opening valve. Comparison of oil levels in sight gauge, before and after adding oil to crankcase, shows approximately how much oil has been added.

Filling of this tank can be made by opening the rear engine doors. The tank is mounted on R.H. side of engine compartment, over the A/C compressor.

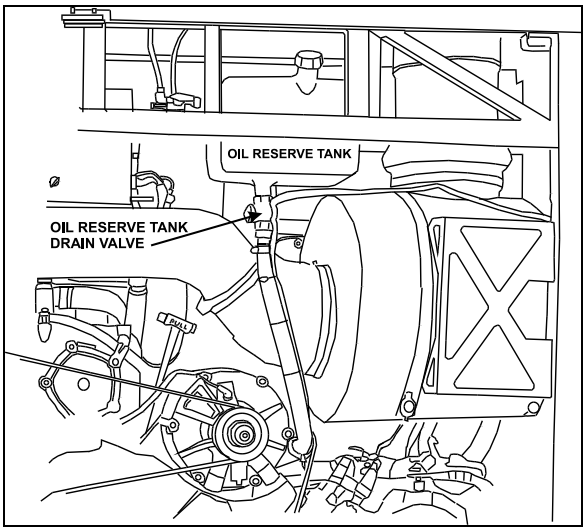

FIGURE 1: ENGINE OIL RESERVE TANK 01063

2.2 COLD WEATHER OPERATION

The proper selection of the engine oil grade will ease cold weather starting (refer to the lubrication and servicing schedule for the engine oil grade recommendation). Other practical considerations, such as the use of batteries, cables and connectors of adequate size, proper setting of voltage regulator, ether starting aid, oil and coolant heater systems, and proper fuel selection will ease cold weather starting.

2.3 FLEXIBLE HOSE MAINTENANCE

The performance of engine and equipment are greatly related to the ability of flexible hoses to supply lubricating oil, air, coolant, and fuel oil. Maintenance of hoses is an important step to ensure efficient, economical, and safe operation of the engine and related equipment.

2.3.1 Pre-Starting Inspection

Check hoses daily as part of the pre-starting inspection. Examine hose for leaks, and check all fittings, clamps, and ties carefully. Ensure that hoses are not resting on or touching shafts, couplings, heated surfaces including exhaust manifolds, any sharp edges, or other obviously damaging areas. Since all machinery vibrates and moves to a certain extent, clamps and ties

can fatigue with time. To ensure proper support, inspect fasteners frequently and tighten or replace them as necessary.

2.3.2 Leaks

Investigate leaks immediately to determine if fittings have loosened or cracked, and also if hoses have ruptured or worn through. Take corrective action immediately. Leaks are not only potentially detrimental to machine operation, but can also result in added expenses caused by the need to replace lost fluids.

⚠ CAUTION ⚠

Personal injury and/or property damage may result from fire due to the leakage of flammable fluids, such as fuel or lube oil.

Service life

The limited service life of a hose is determined by the temperature and pressure of the gas or fluid within it, the time in service, its installation, the ambient temperatures, amount of flexing, and the vibration it is subjected to. With this in mind, it is recommended that all hoses be thoroughly inspected at least every 500 operating hours or after 15,000 miles (24 000 km). Look for surface damage or indications of damaged, twisted, worn, crimped, brittle, cracked, or leaking lines. Hoses having a worn outer surface or hoses with a damaged metal reinforcement should be considered unfit for further service.

It is also recommended that all hoses in this vehicle be replaced during major overhaul and/or after a maximum of five service years. Quality of replacement hose assemblies should always be equal to or superior to those supplied by the Original Equipment Manufacturer.

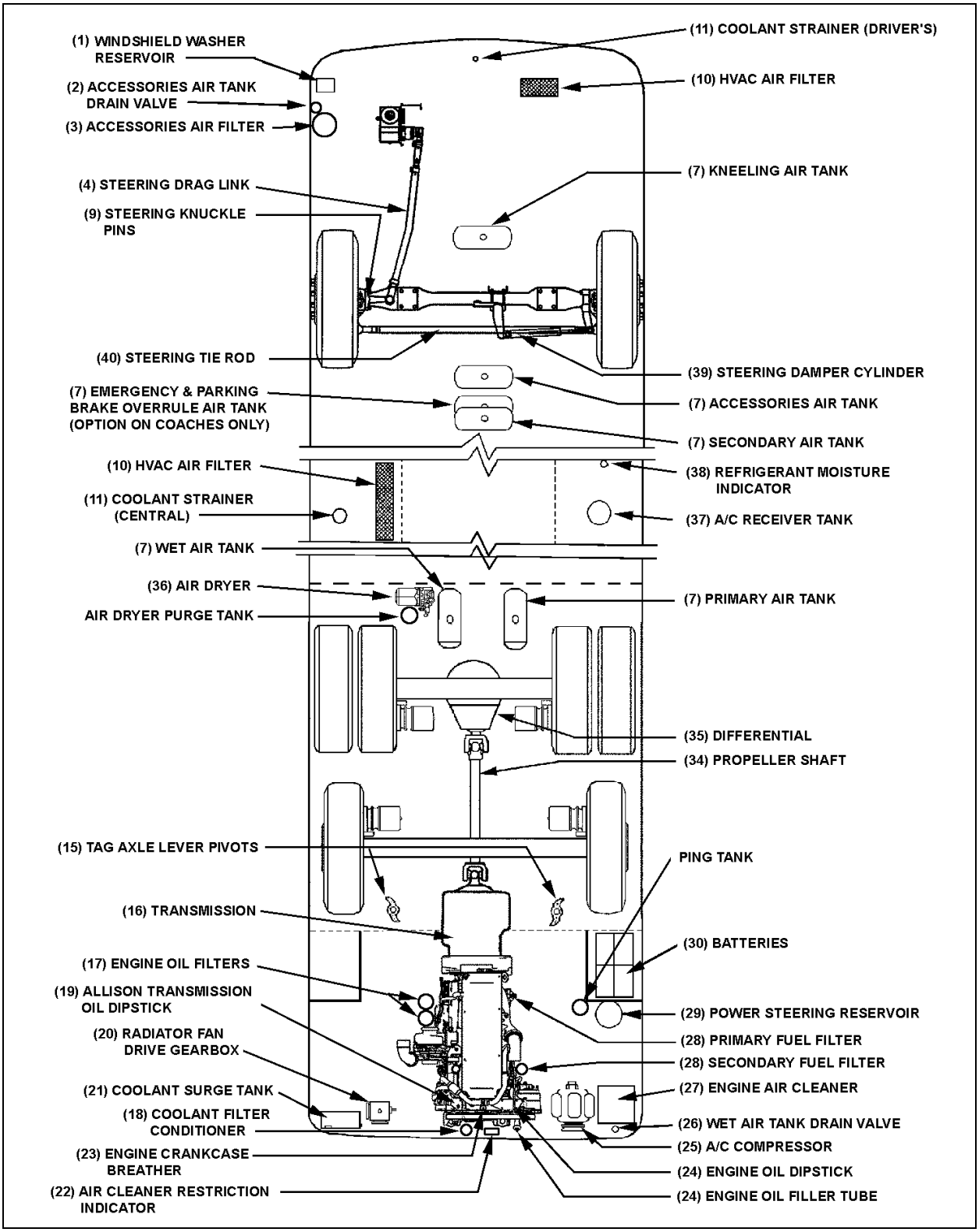

FIGURE 2: LUBRICATION AND SERVICING POINTS ON I-BEAM FRONT SUSPENSION VEHICLES 24023

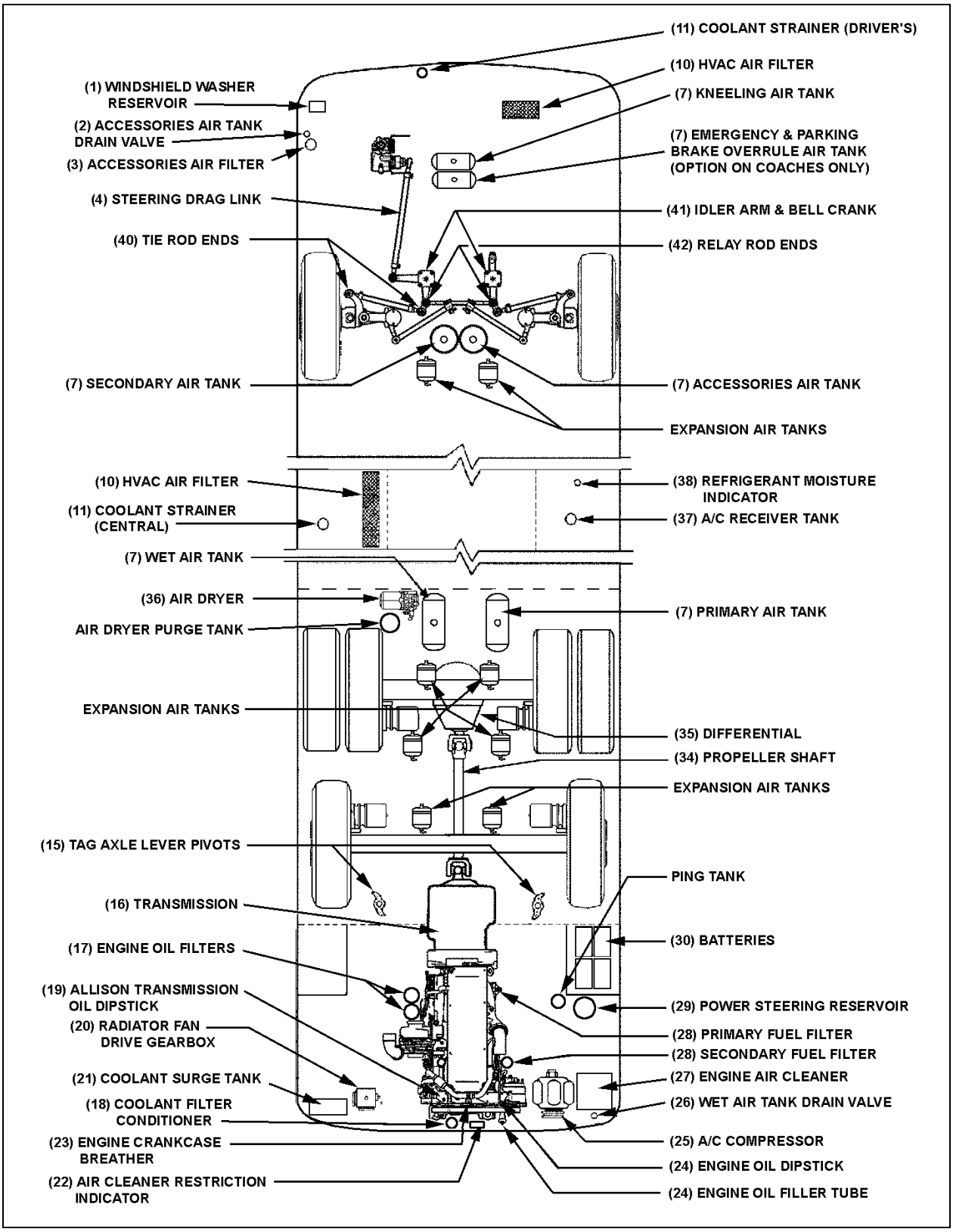

FIGURE 3: LUBRICATION AND SERVICING POINTS ON INDEPENDENT FRONT SUSPENSION VEHICLES 24024

2.4 WALK-AROUND INSPECTION

It is good practice to make a basic visual inspection of key areas on the vehicle every day (or before every trip for private coaches) and to correct any problem found.

OUTSIDE THE VEHICLE	
ITEM*	DESCRIPTION
---	Check for leaks under vehicle and in engine compartment.
---	Check that baggage and service compartment doors close properly.
---	Inspect tires and wheels for correct tire pressure, wear or damage and for missing wheel studs and nuts.
1	Check windshield washer fluid level and add if necessary.
---	Check condition of windshield wiper blades.
---	Verify proper operation of all road lights, signal lights, brake lights, marker lights and back-up lights; Replace light bulbs as required.
2, 26	Drain accumulated water in accessory and wet air tanks.

ENGINE COMPARTMENT	
ITEM*	DESCRIPTION
24	Check engine crankcase oil level; Add if necessary.
19	Check Allison transmission oil level (can be checked from push-button shift selector); Add if necessary.
29	Check power steering reservoir fluid level; Add if necessary.
21	Check coolant surge tank fluid level; Add if necessary.
28	Drain accumulated water in primary fuel filter/water separator (if equipped). Visually check fuel filter cartridge (Fuel-Pro 382 equipped vehicles only).
22, 27	Check air cleaner restriction indicator; Replace air cleaner when red signals locks in full view.

INSIDE THE VEHICLE	
ITEM*	DESCRIPTION
---	Check for proper operation of the entrance door.
---	Check that emergency exit windows and roof escape hatches can be opened, then close all windows and hatches securely.
---	Verify proper operation of windshield wiper/washer.
---	Adjust and clean mirrors as needed for adequate rear-view vision.
---	Start engine and check for proper operation of all gauges and indicator lights.
---	Check for proper operation of electric and air horns and back-up alarm.
---	Perform a brake test. Check both primary and secondary pressure gauges.

* Item numbers refer to figures 2 and 3.

2.5 LUBRICATION AND SERVICING SCHEDULE

2.6 LUBRICANT AND COOLANT SPECIFICATIONS

ITEM*	DESCRIPTION	SPECIFICATIONS
24	Engine Oil	SAE Viscosity Grade: 15W40 API Classification: CI-4
29	Power Steering Oil	Automatic Transmission Oil (Dexron-III/VI)
18, 21	Engine Coolant	Low silicate, ethylene glycol coolant 50% antifreeze/water solution is normally used Antifreeze concentration should be between 30% and 67%
25	A/C Compressor Oil	Polyolester Oil, HFC 134a compatible: Castrol SW-68 (POE) or equivalent
35	Differential Oil	Multigrade gear oil meeting MIL-L-2105-D: 85W/140. If temperature drops below 10°F (-12°C), 80W90 should be used. Below -15°F (-26°C), 75W90 should be used. (In extreme conditions or for better performance, full synthetic gear oil can be used.)
20	Fan Gearbox Oil	Synthetic oil: Mobil SHC 630
19	Allison Automatic Transmission Oil	Dexron-III/VI or TranSynd
19	ZF-ASTronic Transmission Oil	Castrol Syntrans Grade SAE 75W-85 (Synthetic)
---	Multi Purpose Grease	Good quality lithium-base grease: NLGI No.2 Grade is suitable for most temperatures NLGI No.1 Grade is suitable for extremely low temperatures

* Item numbers refer to figures 2 and 3.

2.7 PART NUMBER SPECIFICATIONS

ITEM*	DESCRIPTION	PRÉVOST NO
17	Engine Oil Filters	#510458
29	Power Steering Reservoir Oil Filter	#660528
27	Engine Air Cleaner Filter	#530197
38	Refrigerant Filter Dryer Unit	#950262
28	Engine Primary Fuel Filter	#510137
28	Engine Primary Fuel Filter With Water Separator (Optional)	#531407
28	Engine Secondary Fuel Filter	#510128
28	Secondary “Racor” Fuel Filter	#531390
18	Engine Coolant Precharge Unit	#550629
18	Engine Coolant Filter/Conditioner	#550630
10	A/C And Heating Driver's Air Filter	#871147--871144
10	A/C And Heating Cabin's Air Filter	#871051
16	Allison World (WT) Automatic Transmission Oil Filter Kit	#571709
11	Coolant Strainer	#871029
3	Accessories Air Filter	#641340
36	Air Dryer Cartridge	#641244
---	Alternator drive belt, 85-1/2 in. (2 alternators)	#5060055
---	Alternator drive belt, 72 in. (1 alternator, limp home)	#5060056
---	Fan gearbox drive belt	#506688
---	Compressor drive belt BX100	#506864
---	Windshield wiper blade	#800329

* Item numbers refer to figures 2 and 3.

LUBRICATION AND SERVICING SCHEDULE	Item	Months	DISTANCE TRAVELED[1] (miles/km)																																					LUBRICANT &/OR PART[2]
			6 250 / 10 000	12 500 / 20 000	18 750 / 30 000	25 000 / 40 000	31 250 / 50 000	37 500 / 60 000	43 750 / 70 000	50 000 / 80 000	56 250 / 90 000	62 500 / 100 000	68 750 / 110 000	75 000 / 120 000	81 250 / 130 000	87 500 / 140 000	93 750 / 150 000	100 000 / 160 000	106 250 / 170 000	112 500 / 180 000	118 750 / 190 000	125 000 / 200 000	131 250 / 210 000	137 500 / 220 000	143 750 / 230 000	150 000 / 240 000	156250 / 250 000	162 500 / 260 000	168 750 / 270 000	175 000 / 280 000	181 250 / 290 000	187 500 / 300 000	193 750 / 310 000	200 000 / 320 000	
GENERAL																																							
Flexible hoses, thoroughly inspect all hoses	-	12								•								•								•												•	-------
Front discharge tube, qty:2, check to see if clogged [3]	-	3																																					-------
01 ENGINE																																							
Air cleaner, inspect, clean, replace element if required	27	6	•	•	•	•	•	•	•	•	•	•	•	•	•	•	•	•	•	•	•	•	•	•	•	•	•	•	•	•	•	•	•	•	•	•	•	•	Filter #530197
Engine, change oil and filters. Oil SAE 15W40, API CI-4	17	12		•		•		•		•		•		•		•		•		•		•		•		•		•		•		•		•		•		•	Filter #510458
Engine crankcase breather, clean breather steel mesh	23	12								•								•								•												•	-------
03 FUEL																																							
Change primary & secondary fuel filters, fill with clean fuel before installation	28	12		•		•		•		•		•		•		•		•		•		•		•		•		•		•		•		•		•		•	Primary #510137 ; prim. w/sep #531390 ; secondary #510128
05 COOLING																																							
Radiator fan drive gearbox,check oil level, add if necessary	20	6	•	•	•	•	•	•	•	•	•	•	•	•	•	•	•	•	•	•	•	•	•	•	•	•	•	•	•	•	•	•	•	•	•	•	•	•	Mobil SHC 630 #180217
Radiator fan drive gearbox, change oil	20	12								•								•								•												•	Mobil SHC 630 #180217
Coolant filter/Conditioner, replace element	18	12		•		•		•		•		•		•		•		•		•		•		•		•		•		•		•		•		•		•	Filter #550630
Coolant surge tank, test coolant solution	21	12		•		•		•		•		•		•		•		•		•		•		•		•		•		•		•		•		•		•	-------
Cooling system, drain, flush and refill	18/ 21	24																																				•	Engine coolant
06 ELECTRICAL																																							
Battery terminals, clean and coat terminals	30	12																																					Battery terminal coating
Bosch alternators, replace brushes & voltage regulator		24																•																				•	Regulator #562981 Brush set #562983
Bosch alternators, replace bearings		48																																				•	Bearing, Ball #562972 Bearing, Roller #562976

[1] Proceed to maintenance operation at distance indicated on odometer or specified number of month, whichever comes first.
[2] See paragraph 2.5 & 2.6 of this section for lubricant and part number specifications.
[3] Discharge tubes are rubber tubes located under vehicle

LUBRICATION AND SERVICING SCHEDULE	Item	Months	DISTANCE TRAVELED[1] (miles/km)																																			LUBRICANT &/OR PART[2]
			6 250 / 10 000	12 500 / 20 000	18 750 / 30 000	25 000 / 40 000	31 250 / 50 000	37 500 / 60 000	43 750 / 70 000	50 000 / 80 000	56 250 / 90 000	62 500 / 100 000	68 750 / 110 000	75 000 / 120 000	81 250 / 130 000	87 500 / 140 000	93 750 / 150 000	100 000 / 160 000	106 250 / 170 000	112 500 / 180 000	118 750 / 190 000	125 000 / 200 000	131 250 / 210 000	137 500 / 220 000	143 750 / 230 000	150 000 / 240 000	156250 / 250 000	162 500 / 260 000	168 750 / 270 000	175 000 / 280 000	181 250 / 290 000	187 500 / 300 000	193 750 / 310 000	200 000 / 320 000	250 000 / 400 000	
07 TRANSMISSION																																						
Allison World Automatic transmission equipped with retarder, change oil (standard oil) and filters	16	6		•		•		•		•		•		•		•		•		•		•		•		•		•		•		•		•		Oil Dexron-III/VI
Allison World Automatic transmission without retarder, change oil (standard oil) and filters	16	12				•				•				•				•				•				•				•				•		Oil Dexron-III/VI
Allison World Automatic transmission equipped with retarder, change oil (TranSynd synthetic fluid)	16	24								•								•								•								•		TranSynd Synthetic Fluid
Allison World Automatic transmission with or without retarder, change filters (TranSynd synthetic fluid)	16	24								•								•								•								•		Filters #571709
Allison World Automatic transmission without retarder, change oil (TranSynd synthetic fluid)	16	48																								•										TranSynd Synthetic Fluid
ZF-Astronic Automatic Transmission, change oil & filter after 185 000 miles (300 000 km)	16	24																													•					Castrol Syntrans grade SAE 75W-85
Transmission oil cooler, replace unit if vehicle is equipped with transmission retarder	43	24																																		Prévost #550712
09 PROPELLER SHAFT																																						
Grease one fitting on each universal joint and slip joint	34	6	•	•	•	•	•	•	•	•	•	•	•	•	•	•	•	•	•	•	•	•	•	•	•	•	•	•	•	•	•	•	•	•		Multipurpose grease
11 REAR AXLE																																						
Differential, check oil level, add if necessary	35					•				•				•				•				•				•				•				•		Same type of oil used
Differential, change oil, clean breathers	35	12																•																•		Multigrade gear oil
Differential, change oil, clean breathers	35	48																																	•	Full synthetic gear oil
Tag axle lever pivot, grease one fitting on each pivot	15	6	•	•	•	•	•	•	•	•	•	•	•	•	•	•	•	•	•	•	•	•	•	•	•	•	•	•	•	•	•	•	•	•		Multi purpose grease
12 BRAKE & AIR																																						
Air tanks, drain water from all tanks	7	12		•		•		•		•		•		•		•		•		•		•		•		•		•		•		•		•		-------
Accessories air filter, change filter element	3	24																•																•		Filter element #641340
Air dryer, change cartridge	36	24																•																•		Cartridge #641244 or 641278

[1] Proceed to maintenance operation at distance indicated on odometer or specified number of month, whichever comes first.
[2] See paragraph 2.5 & 2.6 of this section for lubricant and part number specifications.

LUBRICATION AND SERVICING SCHEDULE	Item	Months	DISTANCE TRAVELED[1] (miles/km)																																			LUBRICANT &/OR PART[2]
			6 250 / 10 000	12 500 / 20 000	18 750 / 30 000	25 000 / 40 000	31 250 / 50 000	37 500 / 60 000	43 750 / 70 000	50 000 / 80 000	56 250 / 90 000	62 500 / 100 000	68 750 / 110 000	75 000 / 120 000	81 250 / 130 000	87 500 / 140 000	93 750 / 150 000	100 000 / 160 000	106 250 / 170 000	112 500 / 180 000	118 750 / 190 000	125 000 / 200 000	131 250 / 210 000	137 500 / 220 000	143 750 / 230 000	150 000 / 240 000	156250 / 250 000	162 500 / 260 000	168 750 / 270 000	175 000 / 280 000	181 250 / 290 000	187 500 / 300 000	193 750 / 310 000	200 000 / 320 000	
14 STEERING																																						
Drag link ends, grease one fitting at each end	4	6	•	•	•	•	•	•	•	•	•	•	•	•	•	•	•	•	•	•	•	•	•	•	•	•	•	•	•	•	•	•	•	•	•	•	•	Multi purpose grease
Relay rod ends, grease one fitting at each end	36	6	•	•	•	•	•	•	•	•	•	•	•	•	•	•	•	•	•	•	•	•	•	•	•	•	•	•	•	•	•	•	•	•	•	•	•	Multi purpose grease
Steering tie rod ends, grease one fitting at each end	40	6	•	•	•	•	•	•	•	•	•	•	•	•	•	•	•	•	•	•	•	•	•	•	•	•	•	•	•	•	•	•	•	•	•	•	•	Multi purpose grease
Idler arm, grease fitting	41	6	•	•	•	•	•	•	•	•	•	•	•	•	•	•	•	•	•	•	•	•	•	•	•	•	•	•	•	•	•	•	•	•	•	•	•	Multi purpose grease
Bell crank, grease fitting	41	6	•	•	•	•	•	•	•	•	•	•	•	•	•	•	•	•	•	•	•	•	•	•	•	•	•	•	•	•	•	•	•	•	•	•	•	Multi purpose grease
Steering damper cylinder, grease one fitting at rod end	39	6	•	•	•	•	•	•	•	•	•	•	•	•	•	•	•	•	•	•	•	•	•	•	•	•	•	•	•	•	•	•	•	•	•	•	•	Multi purpose grease
Steering knuckle pins, grease two fittings per knuckle	9	6	•	•	•	•	•	•	•	•	•	•	•	•	•	•	•	•	•	•	•	•	•	•	•	•	•	•	•	•	•	•	•	•	•	•	•	Multi purpose grease
Power steering reservoir, replace oil and filter cartridges	29	12								•								•								•											•	Cartridge #660987
16 SUSPENSION																																						
Upper A-Arm Ball Joint, grease fitting	42	6	•	•	•	•	•	•	•	•	•	•	•	•	•	•	•	•	•	•	•	•	•	•	•	•	•	•	•	•	•	•	•	•	•	•	•	Molykote longterm 2/78 grease (preferably) or lithium NLGI no2 or no1
22 HEATING & AIR CONDITIONING																																						
A/C compressor, check oil level, add if necessary	25	6	•	•	•	•	•	•	•	•	•	•	•	•	•	•	•	•	•	•	•	•	•	•	•	•	•	•	•	•	•	•	•	•	•	•	•	Polyolester oil
A/C receiver tank, check refrigerant level, add if necessary	37	6	•	•	•	•	•	•	•	•	•	•	•	•	•	•	•	•	•	•	•	•	•	•	•	•	•	•	•	•	•	•	•	•	•	•	•	HFC 134A
Refrigerant moisture indicator, replace filter dryer unit according to moisture indicator (as needed)	38	6	•	•	•	•	•	•	•	•	•	•	•	•	•	•	•	•	•	•	•	•	•	•	•	•	•	•	•	•	•	•	•	•	•	•	•	Filter #950262
A/C and Heating air filters, clean or replace all elements	10	6		•		•		•		•		•		•		•		•		•		•		•		•		•		•		•		•		•	Driver #871147 , passenger #871051
Coolant strainer, check, clean, change cartridge if required	11	12								•								•								•											•	Cartridge #871029
Condenser discharge tube, qty:2, check to see if clogged [3]	-	3																																				-------
Evaporator discharge tube, qty:6, check to see if clogged [3]	-	3																																				-------
Evaporator motor, condenser motor, recirculating pump drive motor, inspect brush, replace if necessary	-	12								•								•								•											•	Refer to parts manual

[1] Proceed to maintenance operation at distance indicated on odometer or specified number of month, whichever comes first.
[2] See paragraph 2.5 & 2.6 of this section for lubricant and part number specifications.

CONTENTS

1 SLIDE-OUT 26-5

1.1 INNER STOPPER 26-5
1.1.1 Maintenance 26-5
1.1.2 Adjustment 26-5
1.2 "IN LIMIT" STOPPER 26-6
1.2.1 Maintenance 26-6
1.2.2 Adjustment 26-6
1.3 EXTERIOR EXTRUSION 26-6
1.3.1 Maintenance 26-6

2 SECURITY PIN 26-7

2.1 MAINTENANCE 26-7
2.2 AIR CYLINDER REPLACEMENT 26-7

3 ROOF REINFORCING ROD 26-7

4 RACK 26-8

4.1 MAINTENANCE 26-8
4.2 FRONT SLIDE-OUT RACK REPLACEMENT 26-8
4.3 REAR SLIDE-OUT RACK REPLACEMENT 26-8

5 PINION 26-9

5.1 PINION AND KEYLESS BUSHING POSITIONING 26-9
5.2 FRONT SLIDE-OUT SHAFT PINION REPLACEMENT 26-9
5.3 REAR SLIDE-OUT SHAFT PINION REPLACEMENT 26-10
5.4 KEYLESS BUSHING 26-10
5.4.1 Installation 26-10

6 ELECTRIC MOTOR 26-13

6.1 MAINTENANCE 26-13
6.2 REPLACEMENT 26-13

7 SPEED REDUCTION GEARBOX 26-13

7.1 MAINTENANCE 26-13
7.2 GEARBOX REPLACEMENT 26-13

8 JAW COUPLING 26-13

8.1 MAINTENANCE 26-13
8.2 REPLACEMENT & ADJUST-MENT 26-14

9 FLANGE BEARING 26-14

10 LOCKING COLLAR 26-14

10.1 INSTALLATION 26-14

11 LINEAR BEARING 26-15

11.1 MAINTENANCE 26-15
11.2 REPLACEMENT & ADJUSTMENT 26-15
11.3 LEVEL & TILT ADJUSTMENT 26-15
11.3.1 Procedure 26-15

12 RAIL 26-16

12.1 MAINTENANCE 26-17
12.2 REPLACEMENT 26-17

13 ACETAL PLASTIC BLOCKS 26-17

13.1 REMOVAL / INSTALLATION 26-17

14 SLIDE-OUT PNEUMATIC SYSTEM 26-18

14.1 DESCRIPTION 26-18
14.2 MAINTENANCE 26-19
14.3 SEAL 26-20
14.3.1 Maintenance 26-20
14.3.2 Seal assembly removal 26-20
14.3.3 Seal assembly installation 26-20
14.3.4 Slide-out 2" inside retraction 26-21

15 SLIDE-OUT ELECTRICAL SYSTEM 26-22

15.1 ELECTRICAL INTERCONNECTION WITH PREVOST VEHICLE 26-22
15.2 SLIDE-OUT BREAKERS / FUSES 26-23
15.2.1 Multiplex fuses 26-23
15.3 PROBING VOLTAGE ON THE MULTIPLEX CIRCUITS 26-23
15.4 MODULE REPLACEMENT 26-23
15.4.1 I/O-B replacement 26-23
15.4.2 CECM module replacement 26-24
15.5 SLIDE-OUT LIMIT SENSORS 26-24
15.5.1 Maintenance and adjustment 26-24

16 SLIDE-OUT EXTERIOR FINISHING PANELS & WINDOWS 26-25

16.1 FACE PANEL REMOVAL 26-25
16.2 FACE PANEL INSTALLATION 26-25
16.3 SIDE PANELS REMOVAL 26-26
16.4 SIDE PANELS INSTALLATION 26-26
16.5 TOP AND BOTTOM PANEL REMOVAL 26-27
16.6 TOP AND BOTTOM PANEL INSTALLATION 26-27
16.7 WINDOWS REMOVAL 26-28
16.8 FIXED WINDOWS INSTALLATION 26-29
16.9 AWNING WINDOW INSTALLATION 26-31
16.10 SLIDING WINDOW INSTALLATION 26-33
16.11 FINISHING JOINT 26-34
16.11.1 Slide-out face 26-34
16.11.2 Slide-out side 26-35
16.11.3 Slide-out bottom 26-35
16.11.4 Top of Slide-out 26-36

17 WELDING PRECAUTION 26-36

18 SLIDE-OUT MANUAL OVERRIDE PROCEDURES 26-36

18.1 PRELIMINARY CONDITIONS FOR MANUAL OVERRIDE PROCEDURE 26-36
18.1.1 Manual retracting procedure – Front and rear slide-out 26-37

18.1.2 Manual extending procedure – Front and rear slide-out....26-38

19 SLIDE-OUT MAXIMUM LOAD....26-39

20 CONVERSION CHECKLIST....26-40

21 TROUBLESHOOTING....26-41

21.1 ERROR CONDITION OR MISSING OPERATION CONDITION....26-41
21.2 TROUBLESHOOTING – OPERATING CONDITIONS & CONTROL....26-41
21.3 TROUBLESHOOTING - MECHANICAL COMPONENTS....26-44
21.4 SLIDE-OUT FAULT MESSAGE ON MESSAGE CENTER DISPLAY (MCD)....26-47

LIST OF ILLUSTRATIONS

FIGURE 1 : FRONT SLIDE-OUT....26-5
FIGURE 2 : REAR SLIDE-OUT....26-5
FIGURE 3 : SIDE INNER STOPPER ADJUSTMENT....26-5
FIGURE 4: UPPER INNER STOPPERS ADJUSTMENT....26-5
FIGURE 5: LOWER "IN LIMIT" STOPPER....26-6
FIGURE 6: UPPER "IN LIMIT" STOPPER....26-6
FIGURE 7 : EXTERIOR EXTRUSION....26-6
FIGURE 8: SECURITY PIN AIR CYLINDER REMOVAL....26-7
FIGURE 9 : FRONT SLIDE-OUT ROOF REINFORCING ROD....26-7
FIGURE 10 : RACK....26-8
FIGURE 11: PINION AND KEYLESS BUSHING POSITIONING....26-9
FIGURE 12: PINION AND KEYLESS BUSHING AS SEEN FROM EVAPORATOR COMPARTMENT....26-9
FIGURE 13: MECHANICAL COMPONENTS (TYPICAL)....26-9
FIGURE 14 : KEYLESS BUSHING TIGHTENING....26-10
FIGURE 15 : TORQUE WRENCH FORMULA....26-10
FIGURE 16 : KEYLESS BUSHING INSTALLATION INSTRUCTION....26-12
FIGURE 17: ELECTRIC MOTOR AND SPEED REDUCTION GEARBOX....26-13
FIGURE 18: DRIVE MOTOR/GEARBOX ASSEMBLY MOUNTING BOLTS....26-13
FIGURE 19: CLAMPING HUB POSITION ON GEARBOX SHAFT....26-14
FIGURE 20: JAW COUPLING....26-14
FIGURE 21: SLIDE-OUT LEVEL ADJUSTEMENT....26-15
FIGURE 22 : SLIDE-OUT LEVELING....26-16
FIGURE 23: TILT ADJUSTMENT....26-16
FIGURE 24 : RAIL POSITIONING....26-17
FIGURE 25: ACETAL PLASTIC BLOCKS....26-17
FIGURE 26: REMOVE THE UPPER ACETAL PLASTIC BLOCKS WITH A PICKING TOOL....26-17
FIGURE 27: LOWER ACETAL PLASTIC BLOCK INSERTION....26-18
FIGURE 28 : FRONT SERVICE COMPARTMENT....26-18
FIGURE 29: PNEUMATIC COMPONENT PANEL....26-19
FIGURE 30 : SEAL ASSEMBLY....26-20
FIGURE 31: REAR SLIDE-OUT INFLATABLE SEAL AIR INLET....26-20
FIGURE 32: SLIDE-OUT 2" INSIDE – UPPER PART....26-21
FIGURE 33 : DASHBOARD SLIDE-OUT TELLTALE LIGHT....26-22
FIGURE 34: MAIN BREAKER IN ENGINE R.H. SIDE ACCESS COMPARTMENT....26-23
FIGURE 35 : SLIDE-OUT CONTROL PANEL....26-23
FIGURE 36 : VEC CIRCUIT BREAKERS & FUSES....26-23
FIGURE 37 : FRONT SLIDE-OUT SENSORS....26-24
FIGURE 38: REAR SLIDE-OUT SENSORS....26-25
FIGURE 39 : MAGNETS ON SLIDE-OUT UNDERBODY....26-25
FIGURE 40 : SLIDE-OUT PANELS AND WINDOWS....26-25
FIGURE 41 : SIDE PANEL INSTALLATION – DOUBLE FACE ADHESIVE TAPE APPLICATION....26-26
FIGURE 42 : SIDE PANEL INSTALLATION – SIKA 206 G+P APPLICATION....26-27

FIGURE 43 : SIDE PANEL INSTALLATION – SIKA TACK+BOOSTER APPLICATION....26-27
FIGURE 44 : SIDE PANEL INSTALLATION....26-27
FIGURE 45 : TOP AND BOTTOM PANEL INSTALLATION - DOUBLE FACE ADHESIVE TAPE APPLICATION....26-28
FIGURE 46 TOP AND BOTTOM PANEL INSTALLATION - SIKA 206 G+P APPLICATION....26-28
FIGURE 47 : TOP AND BOTTOM PANEL INSTALLATION - SIKA TACK+BOOSTER APPLICATION....26-28
FIGURE 48 : TOP PANEL INSTALLATION....26-28
FIGURE 49 : BOTTOM PANEL INSTALLATION....26-28
FIGURE 50 : FACE FIXED WINDOWS - RUBBER SEAL INSTALLATION....26-29
FIGURE 51 : FACE FIXED WINDOWS - RUBBER SEAL INSTALLATION....26-29
FIGURE 52 : FACE FIXED WINDOWS – 3/16 X 1/2 DOUBLE FACE ADHESIVE TAPE INSTALLATION....26-29
FIGURE 53 : SIDE FIXED WINDOW – ¼ X ½ DOUBLE FACE ADHESIVE TAPE INSTALLATION....26-29
FIGURE 54 : FACE FIXED WINDOW AND HALF-WINDOW – SIKA AKTIVATOR....26-29
FIGURE 55 : SIDE FIXED WINDOW – SIKA AKTIVATOR....26-29
FIGURE 56 : FACE FIXED WINDOW INSTALLATION – SIKA TACK+BOOSTER....26-30
FIGURE 57 : FACE FIXED HALF-WINDOW INSTALLATION – SIKA TACK+BOOSTER....26-30
FIGURE 58 : SIDE FIXED WINDOW – SIKA TACK + BOOSTER....26-30
FIGURE 59 : FACE FIXED WINDOW INSTALLATION....26-30
FIGURE 60 : SIDE FIXED WINDOW....26-30
FIGURE 61: AWNING WINDOW - RUBBER BUMPER INSTALLATION....26-31
FIGURE 62: SIDE BUMPERS....26-31
FIGURE 63: MASKING TAPE APPLICATION....26-31
FIGURE 64: SIKA 255 APPLICATION....26-31
FIGURE 65 : AWNING WINDOW – SIKA AKTIVATOR....26-31
FIGURE 66: AWNING WINDOW – SIKA 255 APPLICATION....26-32
FIGURE 67 : CORRECT TIGHTENING SEQUENCE....26-32
FIGURE 68 : SMOOTH DOWN THE JOINT....26-32
FIGURE 69 : AWNING WINDOW – SEAL THE UPPER CORNERS....26-32
FIGURE 70 : AWNING WINDOW – SEAL THE CHINK....26-33
FIGURE 71 : SLIDING WINDOW - SIKA AKTIVATOR....26-33
FIGURE 72 : SLIDING WINDOW - SIKA AKTIVATOR....26-33
FIGURE 73: AWNING WINDOW – SIKA 252 APPLICATION....26-33
FIGURE 74 : CORRECT TIGHTENING SEQUENCE....26-34
FIGURE 75 : SLIDING WINDOW – SEAL THE UPPER CORNERS....26-34
FIGURE 76 : SEAL....26-34
FIGURE 77....26-34
FIGURE 78....26-34
FIGURE 79....26-35
FIGURE 80....26-35
FIGURE 81....26-35
FIGURE 82....26-35
FIGURE 83....26-35
FIGURE 84....26-35
FIGURE 85....26-36
FIGURE 86....26-36
FIGURE 87: COMPARTMENTS LOCATION....26-36
FIGURE 88: VEC CIRCUIT BREAKERS ON SLIDE-OUT CONTROL PANEL....26-37
FIGURE 89: MAIN SLIDE-OUT BREAKER IN ENGINE R.H. SIDE ACCESS COMPARTMENT....26-37
FIGURE 90: SLIDE-OUT CONTROL PANEL....26-37
FIGURE 91: INFLATABLE SEAL RELIEVING SHUT-OFF VALVE....26-37
FIGURE 92: SLIDE-OUT MOTOR ROTATION....26-38
FIGURE 93: INFLATABLE SEAL PRESSURE GAGE....26-38
FIGURE 94: SLIDE-OUT MOTOR ROTATION....26-38
FIGURE 95 : FRONT SLIDE-OUT DEFLECTION....26-39

1 SLIDE-OUT

1.1 INNER STOPPER

The front slide-out is equipped with six inner stoppers laid out in the following way: two stoppers on the top horizontal member of the slide-out, and two stoppers on each vertical upright, while the rear slide-out is equipped with only three stoppers (figure 1 and figure 2). The upper inner stoppers are used to provide a support to position perpendicularly the slide-out with the vehicle structure.

The side inner stoppers are used to block the extension of the slide-out. They act as ultimate physical limits but take note that when the “out limit” sensors are properly adjusted, the slide-out extension stops before the side inner stoppers reach the side structure keys (figure 1 & 2).

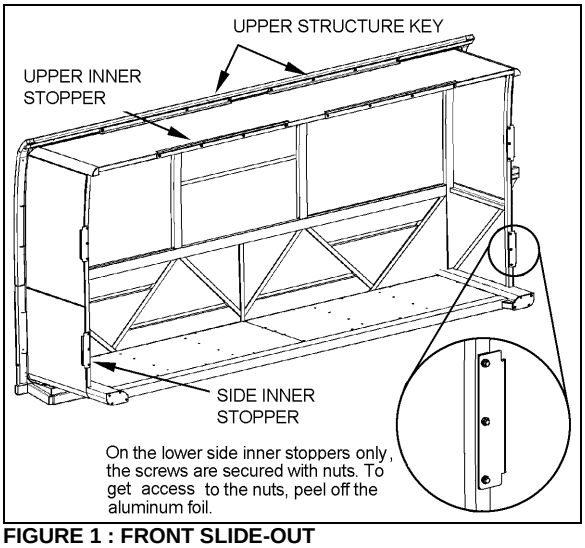

FIGURE 1 : FRONT SLIDE-OUT

1.1.1 Maintenance

Check that the inner stopper screws are tight and that no damage or deformation has taken place for both the side and the upper stoppers.

1.1.2 Adjustment

1. Adjust the side inner stoppers at 1/8" from the vehicle side structure keys, and tighten the screws. Make sure there is a minimum gap of 2mm (0.079”) between the side inner stopper and the side window pane (figure 3). Use shim as required.
2. Adjust the upper structure key and the upper inner stoppers according to FIGURE 4 with the seal deflated. When inflating, the seal presses the roof structure upward and at that moment, the upper inner stopper comes into contact with the upper structure key

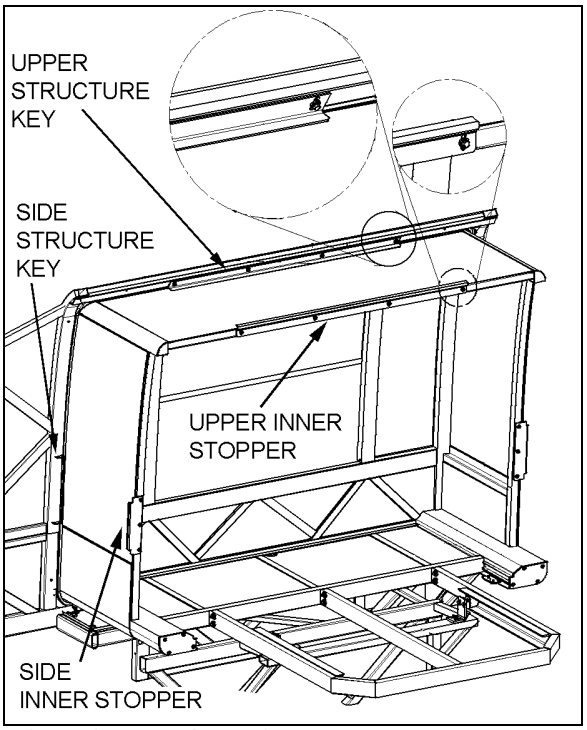

FIGURE 2 : REAR SLIDE-OUT

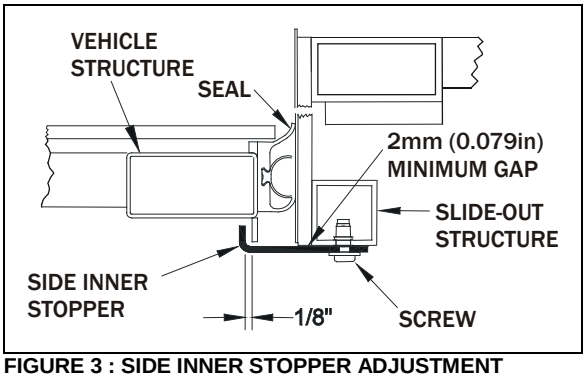

FIGURE 3 : SIDE INNER STOPPER ADJUSTMENT

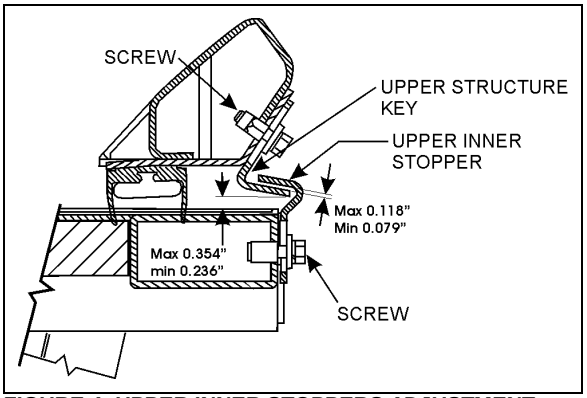

FIGURE 4: UPPER INNER STOPPERS ADJUSTMENT

1.2 "IN LIMIT" STOPPER

Each slide-out has four "in limit" stoppers. Two "in limit" stoppers are mounted on the exterior extrusion at the top of the slide-out (FIGURE 6) and two other "in limit" stoppers are mounted under the slide-out, next to the rail (Figure 5). These stoppers are use to position the outer face of the slide-out flush with the vehicle body when retracted.

1.2.1 Maintenance

Check that the "in limit" stoppers are clean and that there is no foreign matter accumulated between the stopper and their bearing surface. Check that the screws and set screws (where applicable) locking the stoppers in proper position are tight.

1.2.2 Adjustment

NOTE
To properly adjust the "in limit" stoppers, the slide-out system must be turned off to prevent the "in limit" sensors from stopping the slide-out movement before having the "in limit" stoppers contacting their bearing surface.

1. Extend the slide-out partially.
2. Set the ignition switch to the OFF position.
3. To adjust the lower "in limit" stoppers, loosen the set screw and then rotate the stopper CW or CCW to move it back or forward depending on the required adjustment. To adjust the upper plastic "in limit" stoppers, add or remove shims as required between the stopper and the extrusion.
4. Using the manual override procedure (section 18), move the slide-out up to its full "in" position.
5. Using a straight edge, check if the outer face of the slide-out is flush with the vehicle body with the stoppers contacting their bearing surface. Readjust the stoppers if necessary.
6. Readjust the "in limit" sensor.

NOTE
To make sure that the lower "in limit" stoppers are contacting their bearing surface (the acetal plastic blocks) when the slide-out is closed, put white paint on the "in limit" stopper before and check if the acetal plastic blocks are marked with paint.

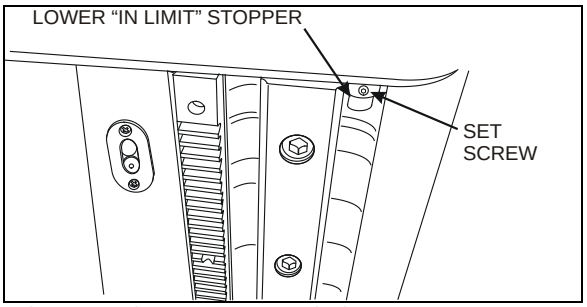

FIGURE 5: LOWER "IN LIMIT" STOPPER

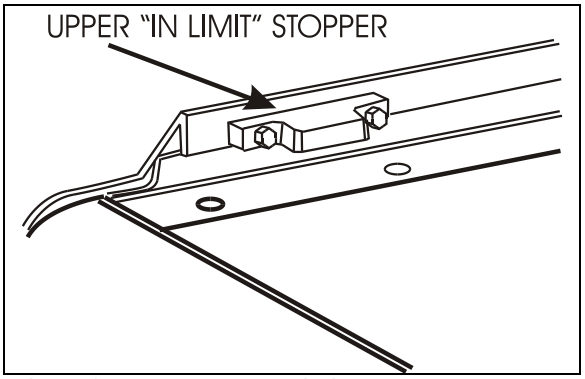

FIGURE 6: UPPER "IN LIMIT" STOPPER

1.3 EXTERIOR EXTRUSION

The exterior extrusion function is to provide a leaning surface for the inflatable seal. When inflating, the seal leans against the extrusion and presses the roof structure upward until it rests on the inner side of the extrusion.

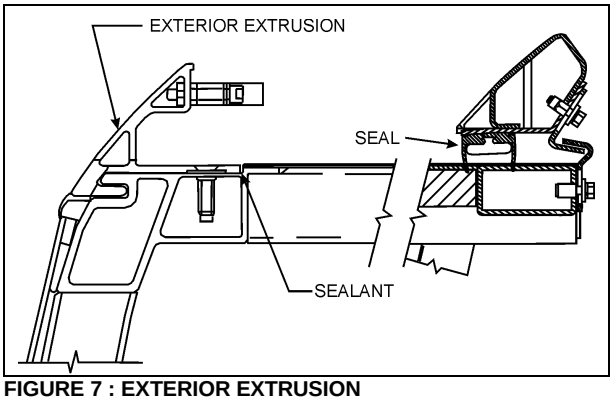

FIGURE 7 : EXTERIOR EXTRUSION

1.3.1 Maintenance

Inspect the exterior extrusion for any deformation or deterioration. Check that the screws are tight. Inspect the sealant condition on screw head and between the extrusion and the vehicle structure, and also at both ends of the extrusion. If needed, clean old sealant and

replace with Sika 221 sealant or equivalent product.

2 SECURITY PIN

During normal ride, the slide-out cannot extend by itself because the 740:1 ratio speed reduction worm gear type gearbox system is not reversible, the output shafts are self-locking. The security pin purpose is to lock the slide-out in retracted position if an accident occurs. It is built to stand a great lateral acceleration of the slide-out.

The system consists of a stainless steel pin connected to a single action/spring return pneumatic cylinder (FIGURE 8). The pin engages in the slide-out receptacle with releasing of the parking brake. A knocking sound may be heard at this moment. An O-ring is located at the base of the pin housing to reduce knocking when the pin retracts. The lower hole on the pin housing permits water to drain. The upper hole permits to insert a small screwdriver to prevent the pin from rotating when the air cylinder has to be removed.

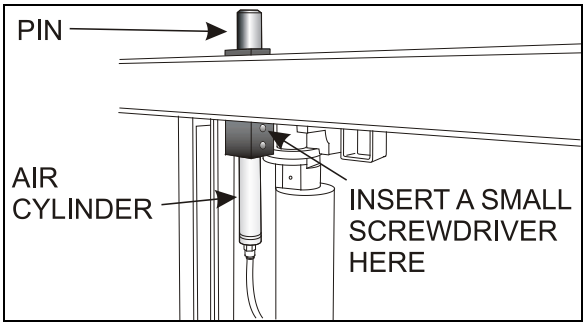

FIGURE 8: SECURITY PIN AIR CYLINDER REMOVAL

2.1 MAINTENANCE

Inspect air cylinder and fitting for air leaks. Periodically, check that the pin retracts and engages in the receptacle as it should when the parking brake is applied or released. To do slide-out, the slide-out must be in its full “IN” position with the engine running. If the pin produces excessive knocking when it engages with releasing of the parking brake, reduce air cylinder speed by adjusting the air flow regulator on the pneumatic control panel (FIGURE 29, item 11).

2.2 AIR CYLINDER REPLACEMENT

1. Assure the parking brake is applied.
2. Disconnect the cylinder air tubing from the 2nd baggage compartment (front slide-out) or under the bed structure (rear slide-out).
3. Using a wrench at its lower end, unscrew the air cylinder from the pin housing.
4. Insert a small screwdriver through the pin and housing to prevent rotation of the pin an then, unscrew the cylinder rod from the pin.
5. Transfer the fitting on the new cylinder. Place Teflon on threads.
6. Cylinder installation is like removal but in reverse order.

3 ROOF REINFORCING ROD

⚠ CAUTION ⚠

The front slide-out roof reinforcing rod may have to be adjusted after a load variation inside the vehicle or on the top of the vehicle.

⚠ CAUTION ⚠

Always lock the turnbuckle using the jam nut to prevent loosening.

The roof reinforcing rod is located on the upper horizontal member of the front slide-out opening and is welded on the roof arches (figure 9).

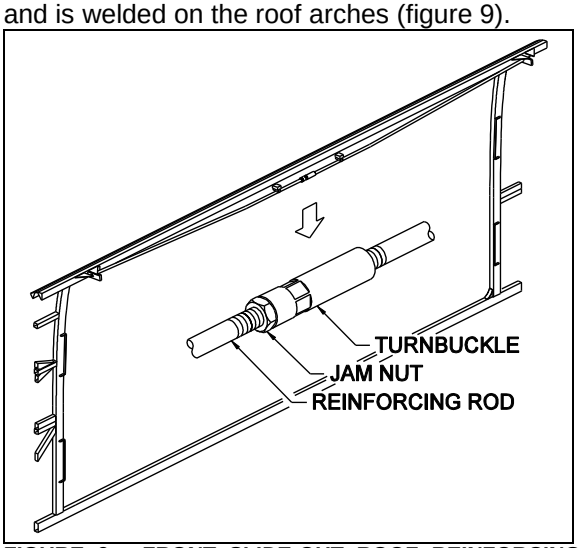

FIGURE 9 : FRONT SLIDE-OUT ROOF REINFORCING ROD

This rod allows an adjustment between the slide-out horizontal member and the roof. When screwing the turnbuckle, the roof is moved upward, and vice versa. Use this rod to adjust

the horizontal member parallel to the slide-out. A member not parallel with the slide-out may cause the inflatable seal to leave the wiper seal or may reduce the inflatable seal and wiper seal efficiency.

4 RACK

Slide-out movement is made by a system of racks and pinions. There are two racks on each slide-out.

4.1 MAINTENANCE

Once a year, check the racks for broken or worn tooth, especially the front slide-out racks. Also, check the rack fastening hole teeth that are weaker and might break (figure 10). Replace the racks if excessive wear is present. Clean racks from sand or other debris. Check that the racks are properly secured. Check the backlash between the gear and the rack. Excessive backlash indicates rack wear.

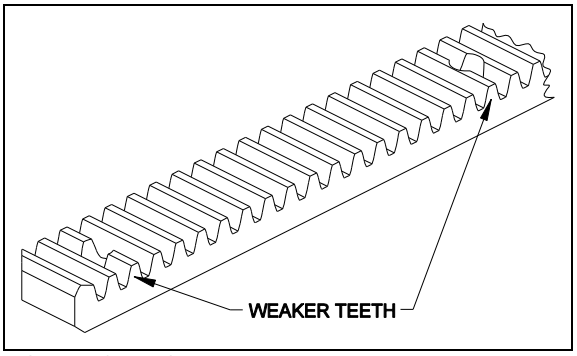

FIGURE 10 : RACK

4.2 FRONT SLIDE-OUT RACK REPLACEMENT

1. Remove the slide-out from the vehicle (removal must be performed according to the Slide-Out Removal Procedure. Ask to your Prevost service representative).
2. From under the slide-out, unscrew all the rack screws and remove the rack.
3. Install a new rack. Tighten the screws to a maximum torque of 2 ft-lbs. Use Loctite™ 242 or equivalent product on threads.

⚠ CAUTION ⚠

The counterborings required for recessed screw heads reduce plastic thickness. Do not torque higher than specified.

4. Reinstall the front slide-out inside the vehicle.

4.3 REAR SLIDE-OUT RACK REPLACEMENT

1. Using the slide-out handheld control or the manual override procedure (section 18, if using the manual override procedure, do not forget to deflate the inflatable seal completely), extend the slide-out about one foot.
2. From outside, unscrew and remove only the first two screws of the rack to be changed.
3. Using the manual override procedure (section 18) only, retract the slide-out to its fully closed position.
4. Loosen the pinion keyless bushing of the rack to be changed.
5. From under the slide-out, unscrew all the rack screws and remove the rack.
6. Install a new rack between the slide out structural rack seat and the pinion. Tighten the screws to a maximum torque of 2 ft-lbs. Use Loctite™ 242 or equivalent product.

⚠ CAUTION ⚠

The counterborings required for recessed screw heads reduce plastic thickness. Do not torque higher than specified.

7. Tighten the pinion keyless bushing as described in section 5.4.
8. Using the slide-out manual override procedure only, extend the slide-out about one foot.
9. Tighten the two remaining crews to a maximum torque of 2 ft-lbs. Use Loctite™ 242 or equivalent product.
10. Using the slide-out handheld control switch or the manual override procedure, retract the slide-out to its fully closed position.
11. Re-inflate the air seal at 10 psi.

5 PINION

⚠ CAUTION ⚠

Make sure all keyless bushings are tightened to 125 lb-ft before moving the slide-out. Refer to section 5.4 for torque wrench settings. A lower torque value may cause the bushing to slip on the shaft, and a higher torque value may break the bushing.

5.1 PINION AND KEYLESS BUSHING POSITIONING

For proper functioning, respect the positioning shown on the following figure.

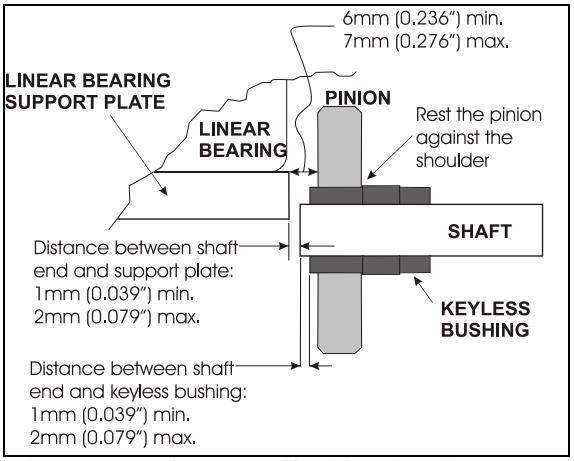

FIGURE 11: PINION AND KEYLESS BUSHING POSITIONING

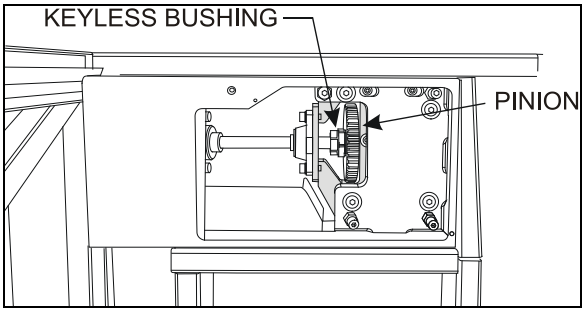

FIGURE 12: PINION AND KEYLESS BUSHING AS SEEN FROM EVAPORATOR COMPARTMENT

5.2 FRONT SLIDE-OUT SHAFT PINION REPLACEMENT

⚠ CAUTION ⚠

Before reinstalling the pinion, clean the following surfaces with alcohol to prevent slippage.

- **Pinion bore;**
- **Keyless bushing I.D. and O.D.;**
- **Shaft.**

Before proceeding with the front slide-out shaft pinion replacement, check the following conditions:

- The locking collars located on the side of the pinion being replaced are disengaged;
- The drive motor/gearbox assembly is removed (see section 7.2);

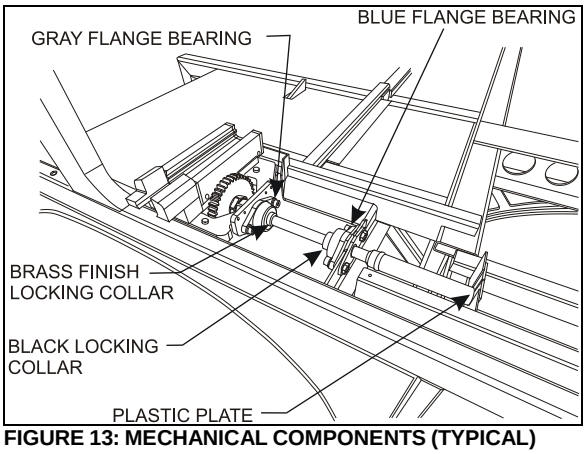

FIGURE 13: MECHANICAL COMPONENTS (TYPICAL)

1. Loosen the keyless bushing (see section 5.4) of the pinion to be replaced. Slide the pinion and its bushing out of the shaft. Check the keyless bushing condition and replace if needed.

NOTE

If necessary, loosen the blue and gray flange bearing to move the pinion away from the rack.

2. Assemble new pinion on the keyless bushing and then slide on the shaft. Do not tighten the bushing at this moment.
3. Properly position the shaft end in relation to the linear bearing support plate (see FIGURE 11) and then tighten the locking collars to maintain the shaft in that position.
4. Position pinion and keyless bushing as shown on FIGURE 11 and tighten the keyless bushing as described in section 5.4.
5. Reinstall the drive motor/gearbox assembly.

⚠ CAUTION ⚠

Make sure the keyless bushing is tightened to 125 lb-ft before moving the slide-out. Refer to section 5.4.1 for torque wrench settings.

5.3 REAR SLIDE-OUT SHAFT PINION REPLACEMENT

The procedure is similar to the front slide-out shaft pinion replacement. Gain access to the mechanism from under the bed structure. Refer to section 5.2.

5.4 KEYLESS BUSHING

The keyless bushings need a specific tightening torque value to ensure proper pinion transmitting torque. They also need specific tools to be tightened.

To tighten or loosen the keyless bushing, use those specific tools:

- crowfoot wrench 1 ½";
- torque wrench;
- combination wrench 1 ¾";
- pipe wrench;
- drive extension 5";
- socket 1 ½".

5.4.1 Installation

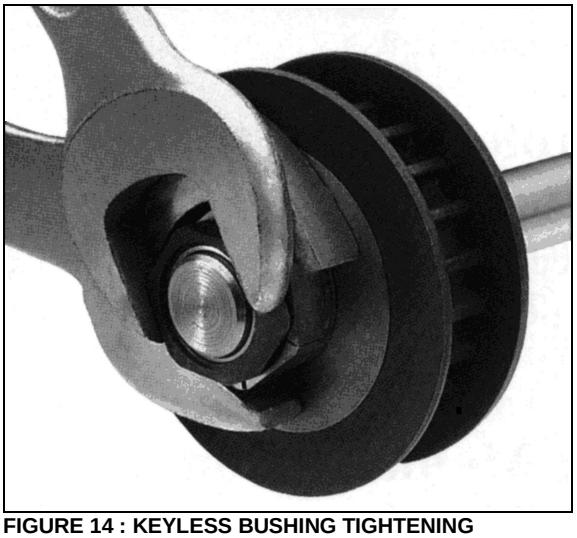

FIGURE 14 : KEYLESS BUSHING TIGHTENING

To tighten the keyless bushing, use a special open-end wrench to retain the yellow part and another wrench to tighten the black part. Figure 20 shows how to tighten the keyless bushing. When tightening, make sure the pinion does not move or rotate.

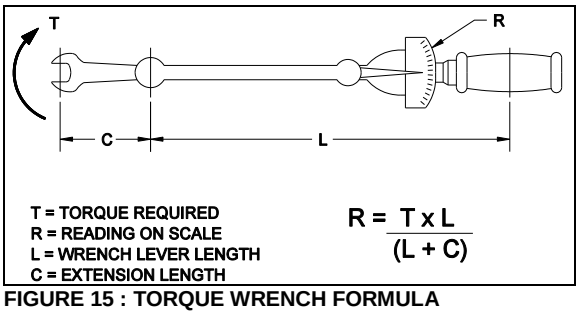

FIGURE 15 : TORQUE WRENCH FORMULA

⚠ CAUTION ⚠

Make sure all keyless bushings are tightened to 125 lb-ft before moving the slide-out. A lower torque value may cause the bushing to slip on the shaft, and a higher torque value may break the bushing. The torque may need to be recalculated depending of the wrench size. Refer to figure 15 for wrench size compensation.

Take note that when the keyless bushing nut is tightened, the pinion moves about 1/16" to 3/32" toward the slide-out center.

NOTE

On the front slide-out, the driver side keyless bushing is not accessible for tightening or removal unless you remove the front left wheel. If the slide-out has been removed, this keyless bushing should be tightened before reinstalling the slide-out.

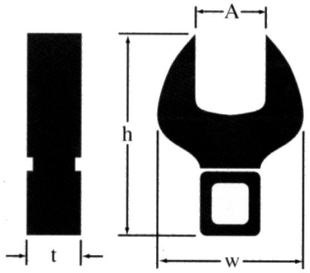

Style C
Installation Nut

WRENCHES FOR INSTALLATION

Fenner Drives offers a complete line of high-quality crowfoot wrenches for installation and to provide counter-torque. These wrenches are much narrower than earlier designs and are specifically for use with Trantorque GT units. It is recommended that both wrenches be used when installing a Trantorque GT unit.

1/2" SQUARE DRIVE

Shaft Size	Part Number	Wrench Style	Dimensions (inches)			
			A	h	w	t
13/16 to 1	6202990024	C	1-1/2	3.44	2.75	0.75

INSTALLATION INSTRUCTIONS

A Trantorque GT Keyless Bushing offers flexible and easy installation while providing exceptional holding power. To ensure a Trantorque GT unit performs as specified, it must be installed properly.

Warning: Use no lubricants in this installation.

1. Shaft and component bore must be within ±0.003"(±0.08mm) [±0.0015"(±0.04mm)Mini Series] of stated bore diameter and must have a surface finish of 32-125 Ra (roughness average). If the surface finish is outside these specified values, consult Fenner Drives.

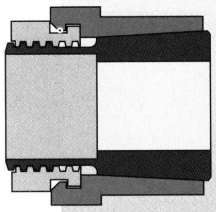

Figure 1

2. Both shaft and component bore must be completely free of paint, grease, oil, and dirt. If necessary, clean the surfaces with a non-petroleum based solvent, such as isopropyl alcohol.

Warning: Do not lubricate the Trantorque GT bushing or shaft. The use of any lubricant on the contact surfaces could result in bushing failure and will void all warranties.

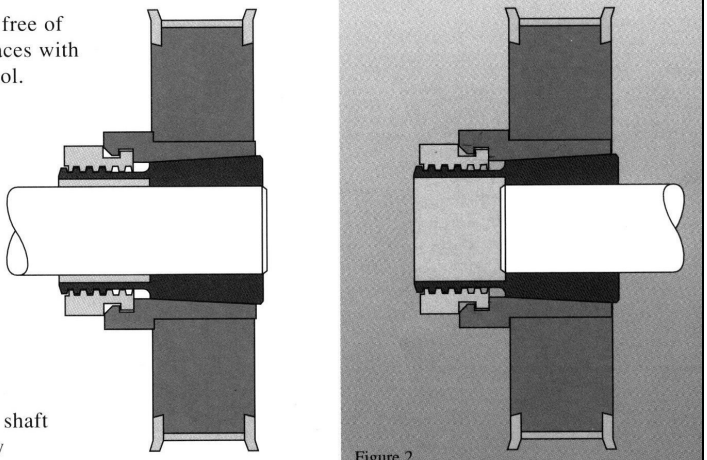

Figure 2

3. Insert the Trantorque GT unit into the component to be mounted, making sure the mating hub is flush against the shoulder at the hex flats.

4. Position the assembly at the desired location on the shaft and hand-tighten the nut (clockwise) until the assembly becomes snug on the shaft.

Warning: Do not hammer or use any type of impact to force the Trantorque GT assembly along the shaft.

Warning: The shaft must fully engage the shaft gripping area (Figure 1) of the Trantorque GT unit. Figure 2 illustrates minimum shaft engagement.

5. Using a torque wrench, tighten the nut to the proper installation torque. See table for torque value. (Note: Fenner Drives has available crowfoot wrenches for square drives in sizes from 1/2" to 3-1/2".) The hex flats on the outer ring are provided for counter-torque, eliminating the need to hold the component or shaft while applying installation torque.

Note: At full installation torque, the assembly will have moved approximately ±0.075"(±1.9mm)[±0.045"(±1.1mm)Mini Series] axially along the shaft away from the nut. If axial position is critical it may be necessary to loosen the nut and reposition the assembly.

Warning: Over-tightening the nut could damage the Trantorque GT unit and/or the mounted component.

Do not use an impact wrench in the installation.

Installation Torque on Nut

	Inch Pound System		Metric System	
	Shaft Size	In. Lbs.	Shaft size	N-m
MINI SERIES	3/16–1/4	125	5–6mm	14.1
	5/16–3/8	150	7–9mm	17.0
	7/16–1/2	175	10–12mm	19.8
	9/16–5/8	200	14–16mm	22.6
	3/4	700	17mm	80.0
STANDARD SERIES	5/8–3/4	1200	15–19mm	136
	13/16–1	1500	20–25mm	170
	1-1/16–1-1/4	2000	28–32mm	225
	1-5/16–1-1/2	2300	34–38mm	260
	1-9/16–1-3/4	2800	40–42mm	316
	1-13/16–2	4900	45–50mm	554
LARGE SERIES	2-1/16–2-1/4	5300	55mm	600
	2-5/16–2-1/2	5600	60mm	635
	2-9/16–2-3/4	6000	65–70mm	680
	2-13/16–3	6600	75mm	750

FIGURE 16 : KEYLESS BUSHING INSTALLATION INSTRUCTION

6 ELECTRIC MOTOR

The power is supplied by a 24V 1/3 HP electric motor coupled with a speed reduction gearbox. Opposite to the gearbox, the motor is equipped with a 3/8 hexagonal socket shaft extension permitting to move the slide-out without using the handheld control. This is very useful when moving the slide-out very slowly is required like during the inner stoppers adjustment, the tilt adjustment or the 2" inside retraction. See section 18 for the manual override procedures.

⚠ CAUTION ⚠

When moving the slide-out with a cordless power drill as described in the manual override procedure, be careful as the slide-out approaches its opened or closed position, in order not to overload the mechanism.

6.1 MAINTENANCE

Inspect the electrical connections and their watertightness. Check that the mounting bolts are tight (FIGURE 18).

6.2 REPLACEMENT

1. The slide-out must be retracted.
2. Unplug the electric cable connector.

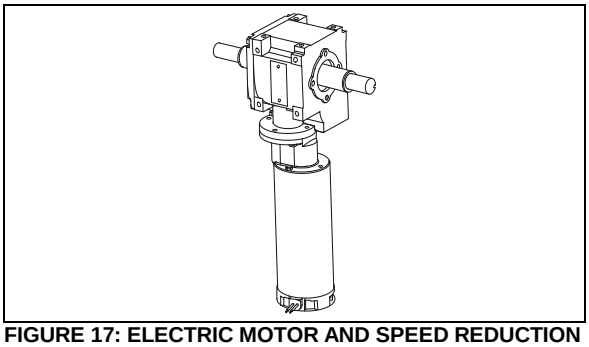

FIGURE 17: ELECTRIC MOTOR AND SPEED REDUCTION GEARBOX

3. Remove the motor from the gearbox.
4. Fasten the new motor to the gearbox using screws.
5. Re-connect the electric cable connector.

7 SPEED REDUCTION GEARBOX

The speed reduction gearbox used is a helical worm gear type. This gearbox has a 2-stage 740:1 ratio and the output shafts are self-locking. Keys on output shafts are glued into keyseats.

7.1 MAINTENANCE

Inspect the gearbox to check if there is any leakage or backlash in the box. Replace the gearbox if excessive wear is present. Check that all bolts are tight.

The gearbox is lubricated for life and the oil should not have to be changed.

7.2 GEARBOX REPLACEMENT

1. The slide-out must be retracted.
2. Disengage the shafts jaw couplings (refer to section 8: JAW COUPLING).
3. Remove the 4 cap screws securing the drive motor/gearbox assembly and dismount the assembly (see FIGURE 18).
4. Remove the gearbox from the motor and install the new one.
5. Reinstall the drive motor/gearbox assembly on the vehicle mounting bracket. Tighten mounting bolts to a torque of 18 lbf-ft in a criss-cross patern.

⚠ CAUTION ⚠

To prevent damaging threads, use your fingers to drive the bolts into the aluminum gearbox housing mounting holes.

6. Reinstall the jaw couplings.

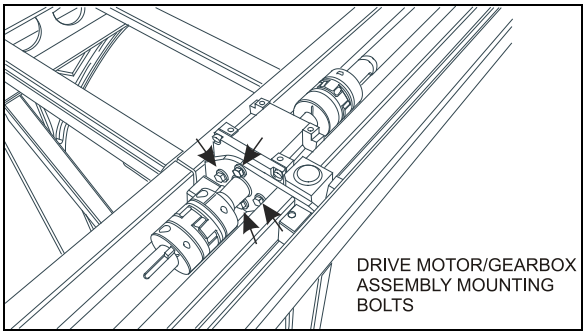

FIGURE 18: DRIVE MOTOR/GEARBOX ASSEMBLY MOUNTING BOLTS

8 JAW COUPLING

8.1 MAINTENANCE

Inspect the jaw couplings to check if there is backlash between the key and the keyway. Also,

check the spider condition. Check that the clamping screws are tight.

8.2 REPLACEMENT & ADJUSTMENT

1. The slide-out must be retracted.
2. Disengage the jaw coupling: loosen the clamping screw on each clamping hub. If required, rotate the motor shaft extension as described in the manual override procedure (section 18) to get to the clamping screws.
3. Separate both clamping hubs.

NOTE
It may be necessary to loosen the blue flange bearings to move the shaft out of the way.

4. Clean and degrease the hub bore and the shaft.
5. Push the new clamping hubs onto the shaft (pinion side).
6. Install a clamping hub on one of the gearbox shaft (opposite side of gearbox mounting bolts) flush with the shaft extremity (FIGURE 19). Tighten the clamping screw to a torque of 18 lbf-ft.
7. Install the second clamping hub on the gearbox shaft. Position the clamping hubs so that they are flush with the shafts extremity (see FIGURE 19).

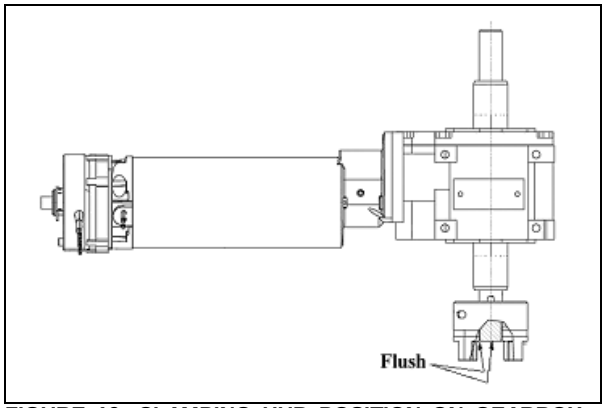

FIGURE 19: CLAMPING HUB POSITION ON GEARBOX SHAFT

8. Reconnect the clamping hubs with the spider. Leave a gap of 20mm (0.787inch) between each clamping hubs as shown on FIGURE 20. Use the motor hexagonal socket output shaft to align the keyways.
9. Tighten clamping screws to a torque of 18 lbf-ft.

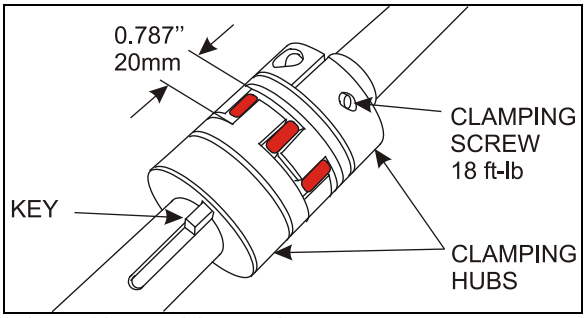

FIGURE 20: JAW COUPLING

9 FLANGE BEARING

There are two different types of flange bearing on the slide-out mechanism (FIGURE 13). Their purpose is to maintain the shaft in position while permitting rotation. The gray flange bearings are fixed to the linear bearing support plate and are not adjustable. The blue flange bearings are fixed to a support with oblong holes permitting to raise or lower the flange bearing as the linear bearing support plate level is being adjusted.

The flange bearings are pre-lubricated and no subsequent lubrication is required due to the very low extending and retracting speed of the slide-out system.

10 LOCKING COLLAR

The locking collar locks the shaft and the flange bearing together using friction. Once locked, it permits no axial translation of the shaft and prevents rotation of the shaft into the flange bearing bore.

10.1 INSTALLATION

Slide the locking collar along the shaft up to the flange bearing (FIGURE 13). Turn the locking collar clockwise while maintaining it pressed against the flange bearing. Knock the collar with a punch to lock it in place, there is a cavity on the collar made for that purpose. Tighten the set screw.

To remove, loosen the set screw and release the locking collar using channellock pliers or a small pipe wrench.

11 LINEAR BEARING

11.1 MAINTENANCE

Make every effort not to allow dust and foreign objects to enter inside the linear bearing.

The linear bearings are pre-lubricated and no subsequent lubrication is required due to the very low demanding use of the slide-out system.

11.2 REPLACEMENT & ADJUSTMENT

1. Remove the slide-out from the vehicle (removal must be performed according to the Slide-Out Removal Procedure. Ask to your Prevost service representative).
2. Disconnect the jaw coupling on the side of the linear bearing being replaced (refer to section 8).
3. Dismount the blue flange bearing.
4. From the mechanism access panel, remove the retaining screws A, B, C & D (see figure 22).
5. Now, you have access to the linear bearing mounting bolts if you turn its support up side down. Dismount the linear bearing and install the new one.
6. Tighten the mounting bolts in a criss-cross pattern to a torque of 60 ft-lb.
7. Reinstall the support plate, retaining screws, blue flange bearing and reengage the jaw coupling. Refer to the specific procedures.

11.3 LEVEL & TILT ADJUSTMENT

Leveling of the slide-out is done by changing the linear bearing support plate height using the leveling screws 1, 2, 3, 4 (figure 22). When proper level is attained, the retaining screws A, B, C & D maintain the support plate seated on the leveling screws. Also, the retaining screws prevent the slide-out from tipping inside the vehicle when it is retracted.

The slide-out is slightly tilted. When retracting, the upper "in limit" stoppers touch first the vehicle structure, followed by the lower "in limit" stoppers. Tilt adjustment is done by changing the linear bearing support plate inclination using the leveling screws 1 & 2 as pivot and 3 to adjust the angle (figure 22).

11.3.1 Procedure

NOTE

*For the **front slide-out**, the front linear bearing leveling screws are accessible from the access panel located over the front wheel while the rear linear bearing leveling screws are accessible from the access panel in the evaporator compartment. For the **rear slide-out**, access the linear bearing from under the bed structure or the radiator compartment.*

⚠ WARNING ⚠

The slide-out must be retracted when the level and tilt adjustment is performed.

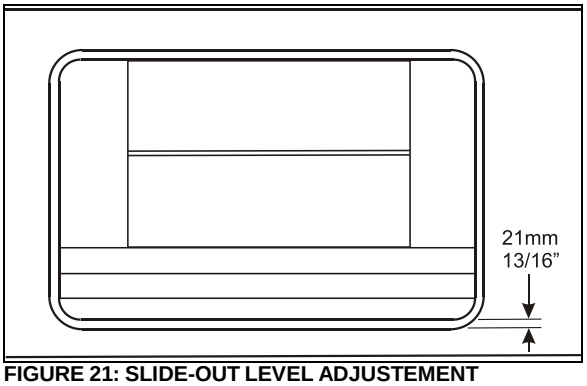

FIGURE 21: SLIDE-OUT LEVEL ADJUSTEMENT

Before proceeding with the level and tilt adjustment, check the following conditions:

- The slide-out is retracted;
- The 2 lower “in limit” stoppers are perfectly adjusted, that means that the lower edge of the slide-out outer panel is flush with the vehicle body when retracted;
- The 2 upper “in limit” stoppers are removed from the slide-out (see section1.2).

1. Loosen the blue flange bearings mounting screws (FIGURE 13).
2. For front slide-out only, loosen the two plastic plates mounting screws along the shafts (FIGURE 13).
3. With the lower edge of the slide-out outer panel flush with the vehicle body, adjust the slide-out level. The distance between the top of the horizontal member under the slide-out and the slide-out under panel must be 21mm (13/16” approximately).

⚠ WARNING ⚠

Never unscrew completely retaining screw A, B, C, D or the slide-out may tip inside.

To raise the linear bearing support plate, turn levelling screw 1 & 2 clockwise. Slightly and gradually, loosen the retaining screws A & B as the support plate elevates, but keep the retaining screws tighten.

To lower the linear bearing support plate, turn screw 1 & 2 counterclockwise. As the support plate goes down, maintain the retaining screw A & B tighten.

4. Loosen retaining screws C & D. Unscrew leveling screw 4. Now, the support plate should be resting on levelling screw 1, 2 & 3.
5. Using levelling screw 3, adjust the tilt in order to have the top of the slide-out recessed between 5mm and 10mm (7/32" and 3/8") (see FIGURE 23).
6. When proper tilt is attained, tighten leveling screw 4 so that it comes into contact with the support plate.
7. Loosen slightly levelling screw 3 and then tighten it so it is perfectly in contact with the support plate. Make sure screws 1, 2, 3 & 4 are in contact with the support plate.
8. Loosen retaining screw A & B.
9. Using a crisscross pattern, tighten progressively (3 rounds) the retaining screw A, B, C & D to a torque of 50 ft-lb.
10. Assure that the levelling screw 1, 2, 3 & 4 are firmly leaning on the support plate and then firmly tighten the jam nuts.
11. Verify that the tilt is still properly adjusted (between 7/32" and 3/8").

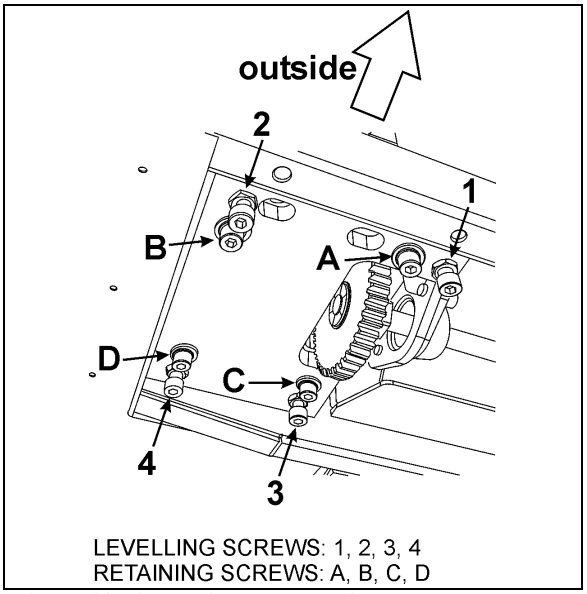

FIGURE 22 : SLIDE-OUT LEVELING

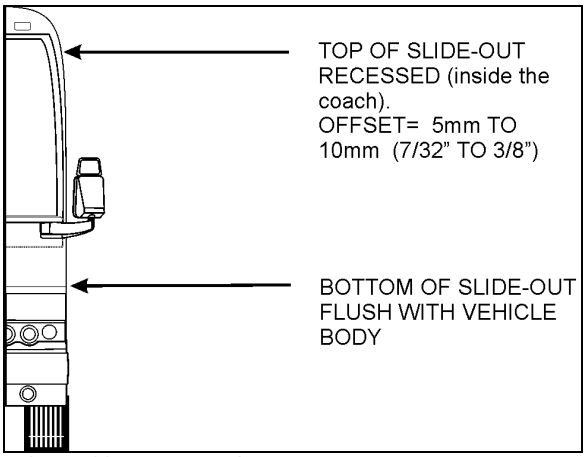

FIGURE 23: TILT ADJUSTMENT

12 RAIL

Rail and linear bearing system provide precise frictionless linear movement together with high load carrying capacity and high stiffness. These standardized equipments are fully interchangeable.

To prevent corrosion, an electrolytic black film treatment is performed to the rail. Do not strike the rail with metal tools, this could damage the treatment.

After the rail is mounted to the slide-out base, a cap is used to cover the bolt hole to prevent foreign matters from clogging up the hole or from entering into the ball slide. The cap for the bolt hole is made of synthetic resin which is superb in its resistance to oil and wear.

12.1 MAINTENANCE

Check that all the caps for the bolt hole are present. Missing caps must be replaced. To insert a cap into the rail bolt hole, use a flat tool. Pound the cap gradually until its height becomes flush with the rail top face.

Clean accumulated dirt from the rails with a soft cloth.

12.2 REPLACEMENT

1. Remove the slide-out from the vehicle (removal must be performed according to the Slide-Out Removal Procedure. Ask to your Prevost service representative).
2. Remove the bolt hole cap covers. To do so, pierce a hole in the center and hook them out. They will not be reusable.
3. Remove the rail mounting bolts.
4. Wipe off the rust preventive oil applied to the new rail. Remove burrs and small bumps on the slide-out mounting face with an oilstone.
5. Carefully place the rail on the bed on its mounting face.

NOTE
The rail is bolted to a flat bar on which weldnuts are mounted. The flat bar is inserted in the slide-out lower body extrusion and can be removed through the end cap (FIGURE 24).

6. Adjust the flat bar position to align the weldnuts with the rail mounting holes.
7. Temporarily tighten the bolts.
8. Adjust the rail position with as per FIGURE 24. For each rail, make sure the gap is the same both side of the rail.
9. For final tightening of the bolts, tighten on either end of the rail and then start to the other end. Tighten to a torque of 95 ft-lbf. Use blue Loctite ™ on threads.
10. Cap the bolt holes.

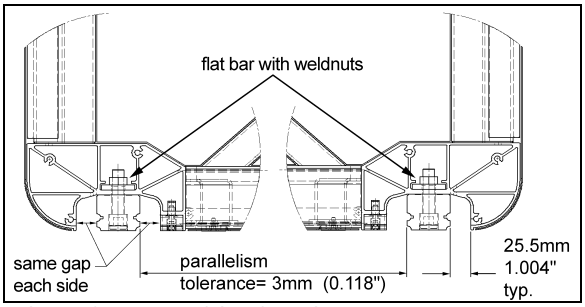

FIGURE 24 : RAIL POSITIONING

13 ACETAL PLASTIC BLOCKS

Three different acetal plastic blocks are installed next to each linear bearing to prevent dirt and foreign matter from entering inside the vehicle. They also serve as bearing surface for:

1. The inflatable seal each side of the rail.
2. The “in limit” stoppers.

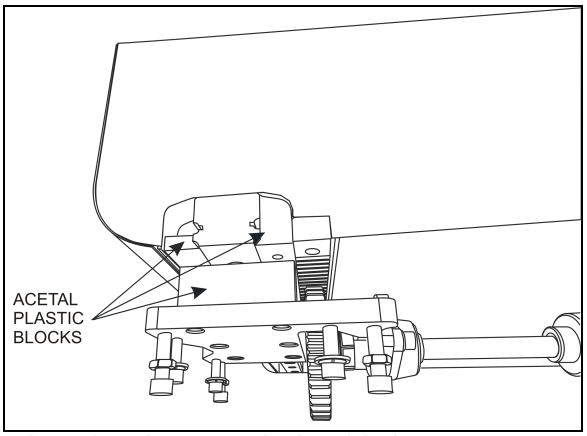

FIGURE 25: ACETAL PLASTIC BLOCKS

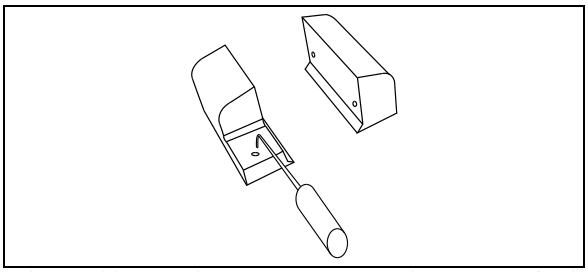

FIGURE 26: REMOVE THE UPPER ACETAL PLASTIC BLOCKS WITH A PICKING TOOL

13.1 REMOVAL / INSTALLATION

1. Gain access to the linear bearing support plate.
2. From under the support plate, remove the acetal plastic block mounting screws (see the oblong holes on figure 22).
3. Remove the 2 upper acetal plastic blocks. They have holes so they can be removed

with a picking tool (FIGURE 26) from outside the vehicle. If the acetal plastic blocks are too hard to reach, slightly extend the slide-out, the movement of the slide-out should bring them out.

4. To remove the lower acetal plastic block, gain access to the compartment under it. Slide the acetal plastic block toward the center of the slide-out. Proceed the same way to reinstall it.

5. Reinstalling the upper acetal plastic blocks. Fold the wiper seal toward the outside with a flat tool to ease installation (FIGURE 27). Tighten the mounting screws to a torque of 7 ft-lb. Leave no gap between the blocks and the rail.

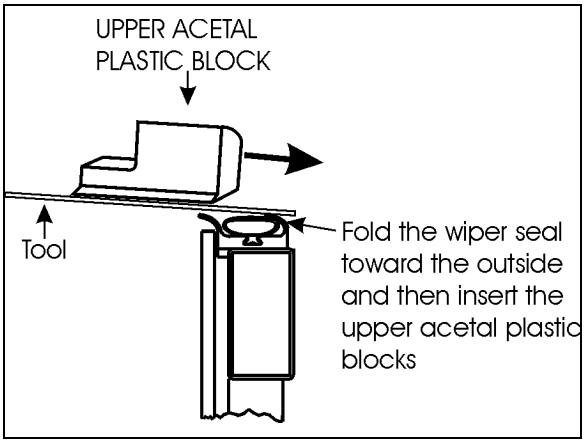

FIGURE 27: LOWER ACETAL PLASTIC BLOCK INSERTION

14 SLIDE-OUT PNEUMATIC SYSTEM

The slide-out is controlled by a pneumatic and electrical system. Mainly, the pneumatic system consists of electrically operated valves that control slide-out components and safety operations.

14.1 DESCRIPTION

AIR PRESSURE INLET VALVE

The slide-out air pressure comes from the air pressure inlet valve on the pneumatic panel in the front service compartment (figure 28).

INFLATABLE SEAL VALVE

The inflation and the deflation of a seal are done using a 5-port 2-position manifold valve with two solenoids. One solenoid is used for inflating of the seal and the other for deflating of the seal. When one of the solenoids is activated (seal deflating valve for example), the valve will keep its state even if the solenoid is deactivated. The inflating valve solenoid is activated to re-inflate the seal when the slide-out reaches its inner or outer limit. The inflatable seal pressure is set to 10 psi and in full “IN” or full “OUT” position, this pressure is continuously applied to the seal as long as the accessory air tank (which supply the slide-out) is not empty.

VACUUM GENERATOR

A vacuum generator using Venturi principle is controlled by a 5-port 2-position manifold valve and is used to evacuate the air faster from the seal and to ensure that the seal surface does not stay in contact with the slide-out.

The vacuum generator valve is activated simultaneously with seal deflating valve solenoid for 10 seconds. A pressure transducer will detect a seal, vacuum valve or generator failure if -5 psig is not reached after the 10 seconds delay. In that situation, an error code will be stored in the MCD (message center display). In normal operating condition, -5 psig is a necessary condition to consider the seal as deflated.

NOTE
When air pressure is relieved using the shut-off valve, the normal extending and retracting operation cycle is disabled, because the pressure transducer reads 0 psig and that is higher than -5 psig (vacuum). For that reason the slide-out cannot be moved with the handheld control.

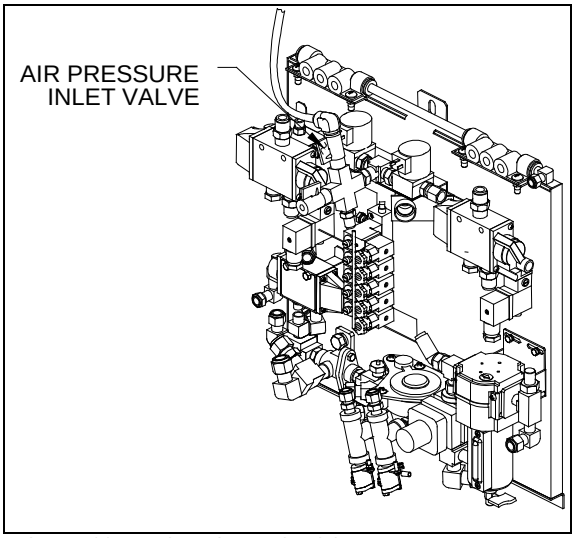

FIGURE 28 : FRONT SERVICE COMPARTMENT

14.2 MAINTENANCE

COMPRESSED AIR LINE

Inspect all compressed air line tubing for cut, swelling, kink or other damage or deterioration. Inspect the pneumatic fittings and components for any leak. The slide-out air supply is connected to the accessory air tank and the maintenance is specified in the “brake and air system” section from the Prevost maintenance manual.

INFLATABLE SEAL CIRCUIT

The efficiency of the seal could be affected by impurities, such as white powder in the pneumatic control valve. It is recommended to inspect the inflatable seal control components once a year to prevent malfunction. In this case, remove the seal valves and clean the interior valve components using a compressed air nozzle. Do the same thing with the vacuum generators.

The inflatable seal pressure must be set from 7 to 10 psi maximum. It is recommended to check the inflatable seal pressure once a month to ensure sealing efficiency and prevent any infiltration from outside.

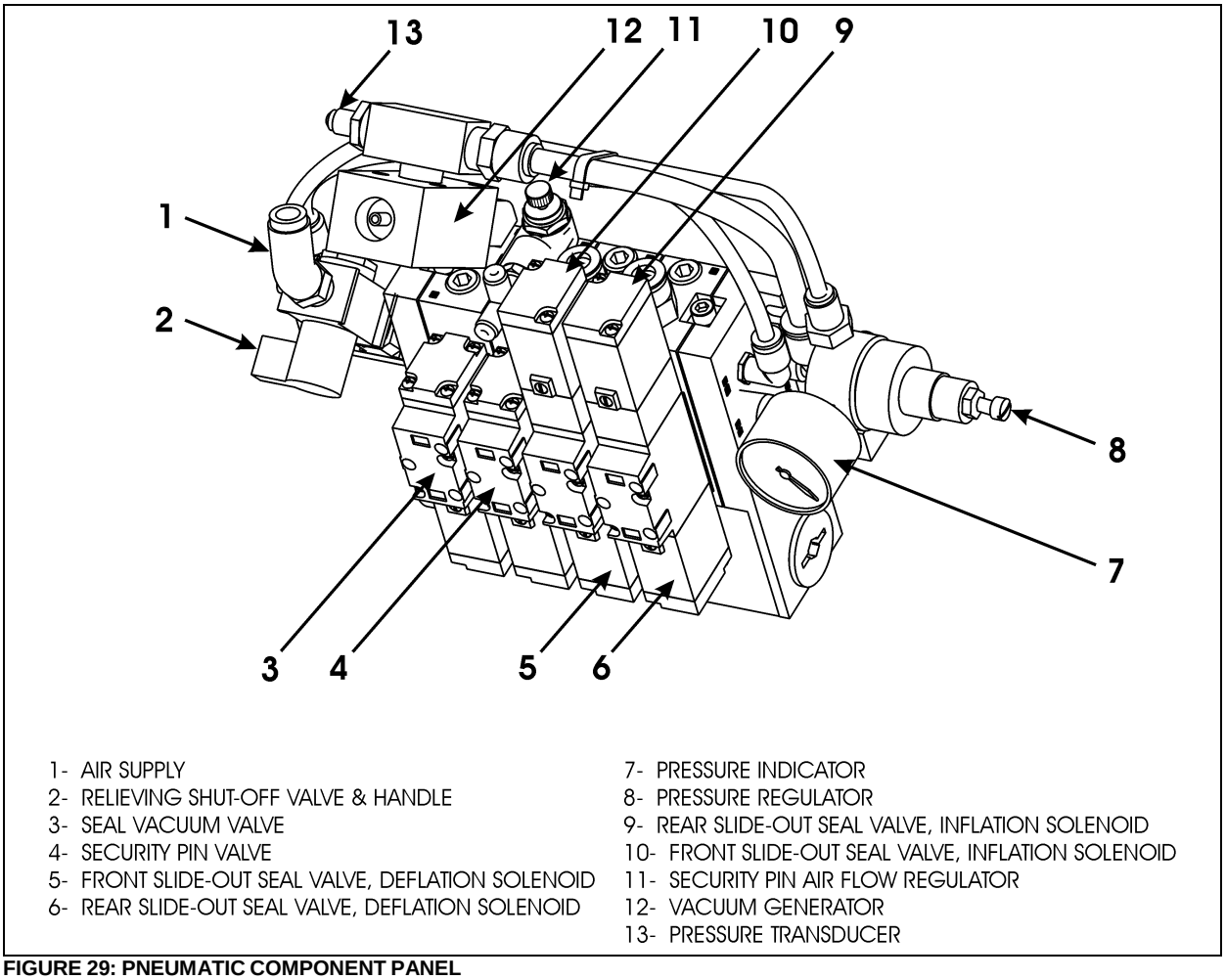

1- AIR SUPPLY
2- RELIEVING SHUT-OFF VALVE & HANDLE
3- SEAL VACUUM VALVE
4- SECURITY PIN VALVE
5- FRONT SLIDE-OUT SEAL VALVE, DEFLATION SOLENOID
6- REAR SLIDE-OUT SEAL VALVE, DEFLATION SOLENOID
7- PRESSURE INDICATOR
8- PRESSURE REGULATOR
9- REAR SLIDE-OUT SEAL VALVE, INFLATION SOLENOID
10- FRONT SLIDE-OUT SEAL VALVE, INFLATION SOLENOID
11- SECURITY PIN AIR FLOW REGULATOR
12- VACUUM GENERATOR
13- PRESSURE TRANSDUCER

FIGURE 29: PNEUMATIC COMPONENT PANEL

14.3 SEAL

NOTE
Refer to the Prevost parts manual for descriptions of the sealant and adhesives used.

The slide-out sealing device is used to prevent any type of infiltration that may occur between the structure body and the slide-out itself. It is composed of an inflatable seal which is used as a primary sealing device for both retracted and extended slide-out position and a wiper seal as a secondary sealing device which is used to wipe water out and to ensure sealing during slide-out movement.

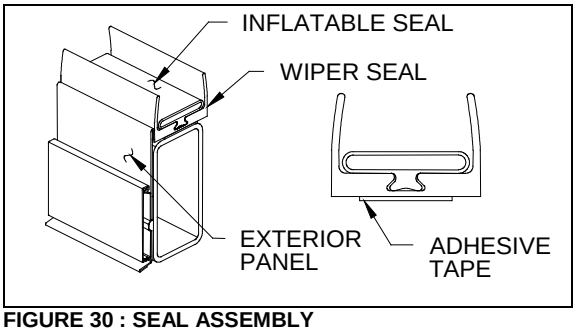

FIGURE 30 : SEAL ASSEMBLY

The seal deflation is done each time the slide-out moves. The deflating valve solenoid is activated before and during the slide-out movement. When the slide-out reaches its retracted or extended position, the deflating solenoid is deactivated before activation of the inflating solenoid to re-inflate the seal.

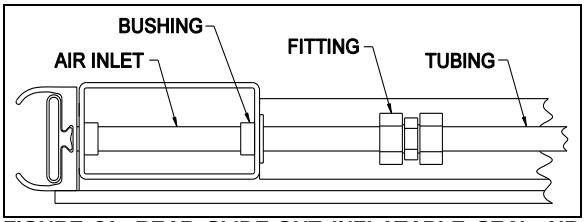

FIGURE 31: REAR SLIDE-OUT INFLATABLE SEAL AIR INLET

⚠ CAUTION ⚠
Make sure the inflatable seal is deflated when manually moving the slide-out during service maintenance. Deflate both inflatable seals completely by turning the relief shut-off valve handle clockwise (see FIGURE 29).

⚠ CAUTION ⚠
Check before using any cleaning or adhesive product on seal, panel or glass to prevent alteration or damage.

14.3.1 Maintenance

The inflatable seal pressure must be set to 10 psi maximum with the pressure regulator. It is recommended to check the inflatable seal pressure once a month to ensure sealing efficiency and prevent any infiltration from outside. Check both seals for air leaks or cracks. Check the sealant between the inflatable seal and the exterior panels and glasses. Add sealant if necessary.

14.3.2 Seal assembly removal

⚠ WARNING ⚠
Always wear the appropriate safety equipment. Maintain adequate ventilation at all time.

1. Retract the slide-out 2" inside the vehicle (section 14.3.4).
2. Unplug the tubing from the inflatable seal air inlet (FIGURE 31). Keep the bushing.
3. Unstick and remove the wiper seal from the structure.
4. Scrape remaining tape from the structure. Remove old sealant that was between the wiper seal and the exterior panels and glasses.

14.3.3 Seal assembly installation

NOTE
This procedure is to install the inflatable seal assembly on the structure.

⚠ CAUTION ⚠
Always apply product in the same direction to prevent dirt from being brought back.

⚠ CAUTION ⚠
Check before using any cleaning or adhesive product on seal, panel or glass to prevent alteration or damage.

NOTE
Refer to the slide-out parts manual for descriptions of primer, cleaner, sealant and adhesives used.

NOTE
Refer to the product specification for drying time.

1. Retract the slide-out 2" inside the vehicle (section 14.3.4).
2. Clean the part of the structure that will receive the inflatable seal and also the back of the exterior panel and glasses with a chix cloth and thinner. Use another cloth to dry the surfaces. Wait at least 2 minutes for drying.
3. Rub the structure and also the back of the exterior panel and glasses with a Scotch Brite (or equivalent product).
4. Clean another times the structure and the back of the exterior panel and glasses with a chix cloth and thinner. Use another cloth to dry the surfaces. Wait at least 2 minutes for drying.
5. Clean the structure and the back of the exterior panel and glasses with appropriate cleaner. Wait until the product is dry before proceeding.
6. Seal the gap between the structure and the exterior panels and the gap between the glasses and the fiberglass panels with appropriate sealant. Make sure not to put sealant on the structure surface where the inflatable seal will be placed. Wait until the product is dry before proceeding.
7. Install the inflatable seal on the structure, placing it as close as possible from the exterior side of the structure. Position the air inlet first. Then remove locally the inflatable seal adhesive tape protection, and press the upper corners on the structure and hold them in place for 90 to 120 seconds. Install the lower corners next, then the straight section. Press the straight inflatable seal sections on the structure for at least 15 seconds. Use a small roller to ensure a good adhesive contact on the structure.
8. Seal the gap between the inflatable seal and the exterior panels and the gap between the glasses and the fiberglass panels with appropriate sealant. Wait until the product is dry before proceeding. Remove excess sealant with appropriate cleaner.
9. Replace the bushing and plug the pneumatic tubing on the inflatable seal air inlet (FIGURE 31).

14.3.4 Slide-out 2" inside retraction

1. For both sides of the slide-out, remove the 2 upper acetal plastic blocks shown on FIGURE 26 (refer to section 13).
2. Manually deflate the seal completely by turning the relieving shut-off valve clockwise (FIGURE 29). Make sure the pressure indicator reading is "0 psi".
3. Turn the ignition to the off position. Using the manual override procedure (section 18), extend the slide-out a few inches so the exterior extrusion screws located on the top of the slide-out are accessible from outside (figure 7).
4. Using a knife cut the sealant between the extrusion and the roof (figure 7). Unscrew and remove the central exterior extrusion screws and the two end extrusion screws.

⚠ CAUTION ⚠
Do not use the slide-out handheld control to move the slide-out 2" inside the vehicle, because the limits are not recognized over the closed position. The slide-out will not stop and damage may occur.

5. Using the manual override procedure, move the slide-out 2" inside the vehicle, so the seal is accessible from outside (FIGURE 32).

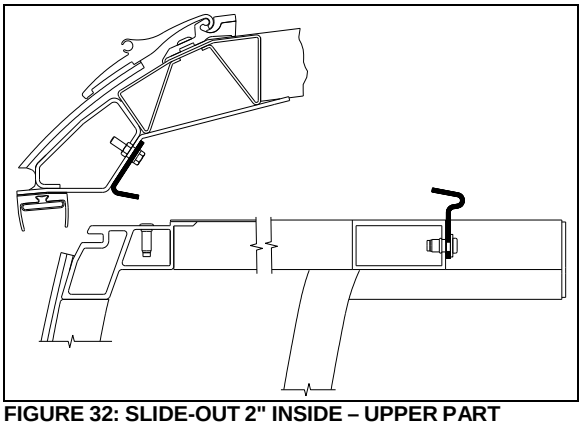

FIGURE 32: SLIDE-OUT 2" INSIDE – UPPER PART

6. Once completed, use the manual override procedure to extend the slide-out to reinstall the exterior extrusion. Apply appropriate sealant on the exterior extrusion screws and between the extrusion, the roof and the edges to prevent water infiltration (FIGURE 32).
7. Reinstall the acetal plastics blocks.
8. Using the manual override procedure, retract the slide-out to its closed position.
9. Finally, the seal can be re-inflated by turning the shut-off valve handle counterclockwise. Check the pressure gage on the inflatable seal regulator to see if the pressure is increasing to 10 psi.

15 SLIDE-OUT ELECTRICAL SYSTEM

⚠ WARNING ⚠

Never modify the slide-out electrical wiring without the Prevost Car approval. Any modifications may cause an unexpected slide-out action and could result in personal injuries.

The multiplexed slide-out electrical system is mainly composed of the Master ID module, the CECM module, the VEC module and two I/O-B modules.

Each slide-out has its own I/O-B module and two power relays. The I/O-B modules analyze the input signal conditions and activate outputs like the pneumatic valves, the retracting or extending programmed sequence, etc. The power relays are used to supply power coming from the I/O-B module to the electric motor and to change polarity to reverse motor rotation.

The I/O-B modules input signals are:

- Handheld control switch IN;
- Handheld control switch OUT;

Also, the following input signals are required for a safe operation of the slide-out:

- Pressure transducer;
- Parking brake;
- “in limit” sensor;
- “out limit” sensor;

The I/O-B modules output signals are:

- Handheld control green indicator light;
- Power relay current reversing;
- Seal valve inflating solenoid;
- Seal valve deflating solenoid;
- Vacuum generator valve solenoid;
- Security pin valve solenoid;
- Electric motor, first power output 15 amps;
- Electric motor, second power output 15 amps;

The CECM module output signals are:

- Dashboard telltale light;
- Transmission inhibit;

⚠ WARNING ⚠

Before working on the slide-out electrical system, turn the ignition key to the “OFF” position.

15.1 ELECTRICAL INTERCONNECTION WITH PREVOST VEHICLE

The slide-out power supply comes from the 24-volts circuit breaker (FIGURE 34) in the engine R.H. side access compartment. The other interconnections are located on the pneumatic panel and the electrical panel in the front service compartment. All the interconnections are shown on the electrical diagrams of your vehicle.

A blinking signal is added on the dashboard telltale panel (figure 33) to indicate that an error condition or a missing operation condition is present on a slide-out. The slide-out telltale light also illuminates to indicate that at least one of the slide-outs is extended.

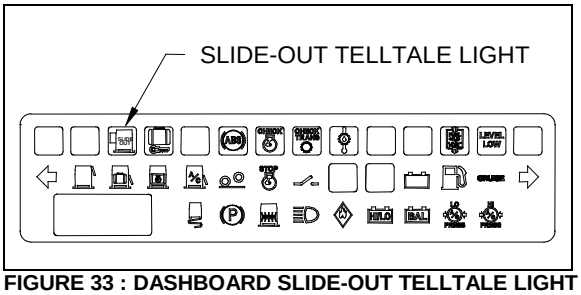

FIGURE 33 : DASHBOARD SLIDE-OUT TELLTALE LIGHT

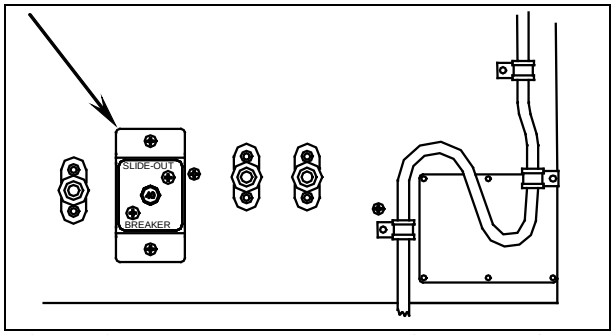

FIGURE 34: MAIN BREAKER IN ENGINE R.H. SIDE ACCESS COMPARTMENT

15.2 SLIDE-OUT BREAKERS / FUSES

The main breaker (for both slide-outs) is located in the engine R.H. side access compartment. All other slide-out breakers and hardware fuses are located inside the VEC, on the slide-out electrical component panel located in the third baggage compartment on the driver side (figure 35 and figure 36).

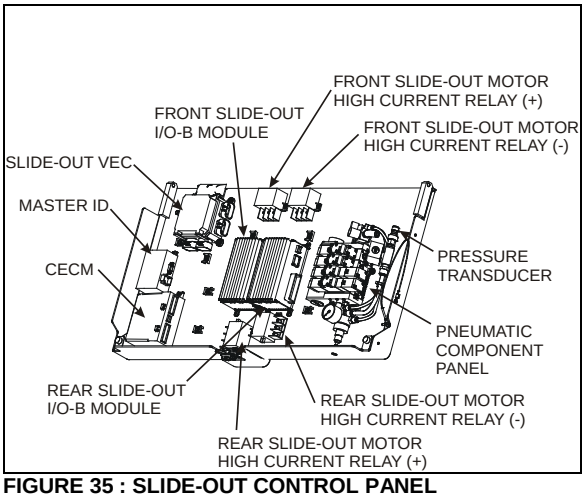

FIGURE 35 : SLIDE-OUT CONTROL PANEL

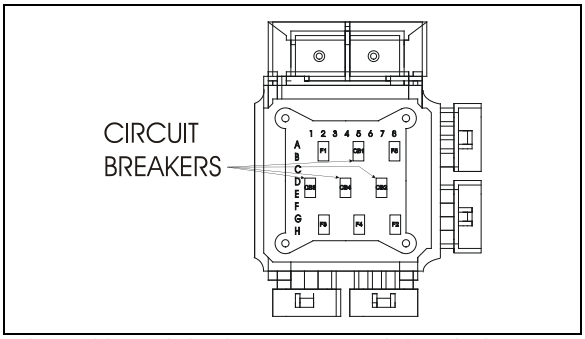

FIGURE 36 : VEC CIRCUIT BREAKERS & FUSES

15.2.1 Multiplex fuses

The multiplex module outputs are protected in current by an internal “soft-fuse”. Each output is programmed to specific maximum amperage. When an output is shorted, the current gets above the limit and the soft-fuse intervenes to turn the output OFF. The output stays OFF until the "soft-fuse" is reset.

Turn the ignition key to the OFF position and turn to the ON position again. This resets all "soft-fuses".

⚠ CAUTION ⚠

Never put grease, Cortec VCI-238 or other product on the multiplex modules connector terminals.

15.3 PROBING VOLTAGE ON THE MULTIPLEX CIRCUITS

Multiplex modules are supplied by 24 volts.

Inactive Multiplex output = Residual voltage of 18% to 33% of supply voltage.

Inactive Multiplex input = Residual voltage of 50% of supply voltage.

NOTE

For a 24V module: an active voltage would be 24V or 0V but not in between. If you measure the intermediate tensions (ex. 12V, 4V, or 8V) this must be interpreted as if the input or the output is inactive.

15.4 MODULE REPLACEMENT

I/O-B and CECM multiplex modules can be replaced and reprogrammed without having to connect a computer to the vehicle.

15.4.1 I/O-B replacement

- Turn the ignition key to OFF.
- Replace the module (disconnect the green connector first, then the grey one and finish with the black connector. To disconnect the black connector, slide downwards the red latch).
- Turn the ignition key to the ON position. This engages the automatic reprogramming,
- The slide-out telltale light will turn on and stay on until the reprogramming is complete. Once completed, the slide-out telltale light will turn off or stay on (not blinking) if at least, one slide-out is extended.
- Check the SYSTEM DIAGNOSTIC menu of the message center display (MCD). Select

FAULT DIAGNOSTIC and ELECTRICAL SYSTEM. Verify the fault message to be certain the module is reprogrammed. If the module is not reprogrammed, the message « Axx Not Responding » appears where Axx is the module number (A56 or A57).

15.4.2 CECM module replacement

- Turn the ignition key to OFF.
- Replace the module.
- Turn the ignition key to the ON position. This engages the program transfer from the Master ID to the CECM module (the back-up program is inside the Master ID. The Master ID will identify the CECM as being new and will send the correct program to it). The slide-out telltale light will turn on and stay on for a while, and then will turn off. Wait until the slide-out telltale starts blinking each second. At this point, the MasterID module has finished loading the program in the CECM.
- Turn the ignition key to the OFF position and then turn it back to the ON position. This engages I/O's modules automatic reprogramming.
- The slide-out telltale light will turn on. Once completed, the slide-out telltale light will turn off or stay on (not blinking) if at least, one slide-out is extended.
- Check the SYSTEM DIAGNOSTIC menu of the message center display (MCD). Select FAULT DIAGNOSTIC and ELECTRICAL SYSTEM. You should read “no errors”. If an active error appears for a module, this one was not reprogrammed. In this case, repeat the procedure.

15.5 SLIDE-OUT LIMIT SENSORS

Two Hall-Effect sensors are used on each slide-out to define end limit positions. The "in limit" and "out limit" sensor detect two pairs of permanent magnets fixed on the slide-out underbody.

15.5.1 Maintenance and adjustment

The rear slide-out sensors are accessible from inside of the vehicle, under the bed structure while the front slide-out sensors can be reached from the 3rd baggage compartment access panel. To remove the sensors, unsnap them from the mounting bracket.

To adjust the "in limit" sensors:

Prior to adjust the “in limit” sensors, assure that the “in limit” stoppers are perfectly adjusted (see section 1.2.2).

1. Retract the slide-out to its full “IN” position with the “in limit” stoppers in contact with their bearing surface.
2. Loosen the “in limit” sensor mounting bracket screws and move back the sensor completely (toward the inside of the vehicle).
3. Bring slowly the sensor toward the outside of the vehicle until the light emitting diode (LED) turns on. When it does, move it 0.079” (2mm) further in the same direction and tighten the mounting bracket screws.
4. Check if the “in limit” sensor is properly adjusted. At the moment when the slide-out stops during normal retraction, the “in limit” stoppers must contact their bearing surface (lower acetal plastic block). Put white paint on the “in limit” stopper before and check if the acetal plastic blocks are marked with paint.

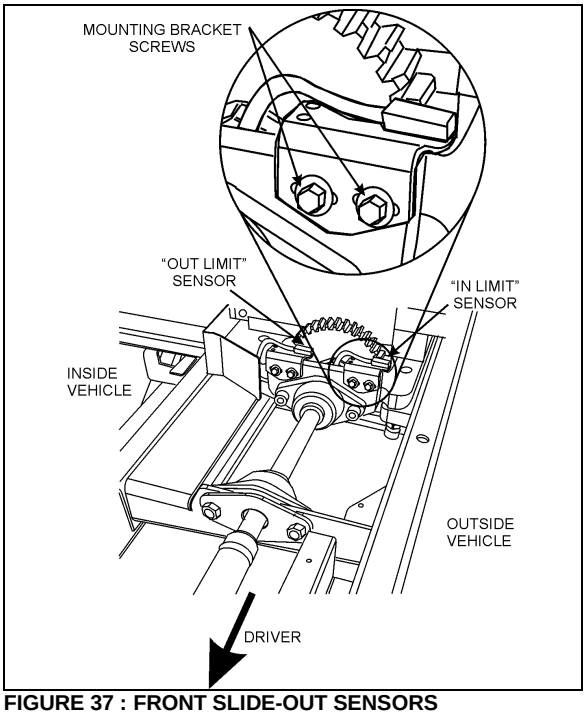

FIGURE 37 : FRONT SLIDE-OUT SENSORS

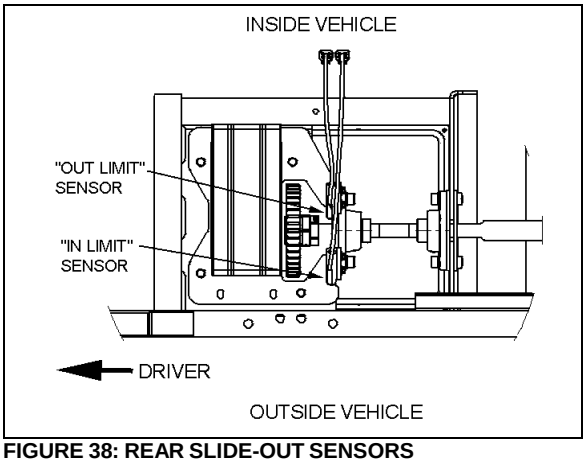

FIGURE 38: REAR SLIDE-OUT SENSORS

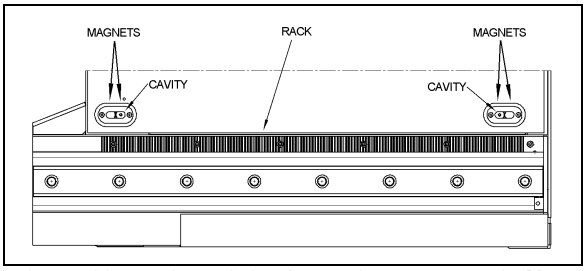

FIGURE 39 : MAGNETS ON SLIDE-OUT UNDERBODY

To adjust the "out limit" sensors:
Prior to adjust the “out limit” sensors, assure that the inner stoppers are perfectly adjusted (see section 1.1).

1. The slide-out is slightly tilted except when it is in its full “IN” or “OUT” position. Extend the slide-out near its full “OUT” position. When the slide-out straitens up and that it is perpendicular with the vehicle body, stop the slide-out.
2. Loosen the “out limit” sensor mounting bracket screws and move back the sensor completely (toward the inside of the vehicle).
3. Bring slowly the sensor toward the outside of the vehicle until the light emitting diode (LED) turns on. When it does, tighten the mounting bracket screws.

NOTE
When the “out limit” sensors are properly adjusted, the slide-out extension stops before the side inner stoppers reach the vehicle structure.

16 SLIDE-OUT EXTERIOR FINISHING PANELS & WINDOWS

NOTE
The removal and installation procedures are all based on standard service methods described in section 18: BOBY. Refer to this manual for procedures, tools, cleaner, adhesives and other product needed.

16.1 FACE PANEL REMOVAL

Use the same procedure as described in section 18: BODY for MTH side panel removal, and:

- Keep the slide-out retracted;
- Make sure not to damage the finishing molding supports to be able to re-use them;
- Remove the old adhesive on the finishing molding supports and clean them before re-using;
- Check where adhesive, sealant and double face adhesive tape are on the structure and the panel back side, in order to be able to stick the new panel in the same way;
- Check the tape width and use same width tape when installing new panels.

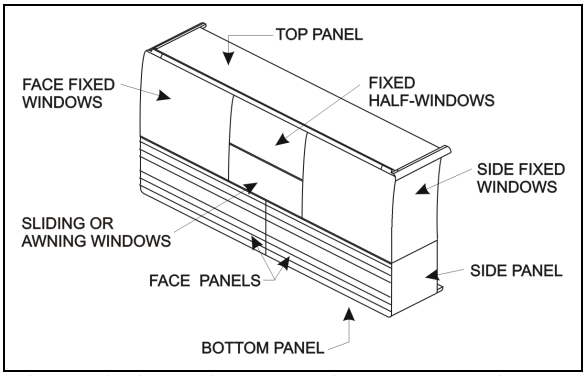

FIGURE 40 : SLIDE-OUT PANELS AND WINDOWS

16.2 FACE PANEL INSTALLATION

For surface cleaning, and preparation, panel installation and products needed, use the same procedure as the MTH side panel installation described in section 18: BODY.

- Keep the slide-out retracted for panel alignment;

- Make sure to apply sealant between the face panels and the side panels, and also between face panels and bottom and top panels. Apply sealant both inside and outside the slide-out panels.

16.3 SIDE PANELS REMOVAL

NOTE
The side panels are made of aluminum, or of stainless steel in option.

Caution: *Be careful not to damage the adjacent surfaces.*

1. Remove the slide-out (according to the Slide-Out Removal Procedure. Ask to your Prevost service representative).
2. Remove the side fixed windows from the slide-out first, as described in section 16.7.
3. Insert a flat screwdriver between the panel and the slide-out structure, in the top left and right corners of the panel, and unstick the panel from the structure.
4. Use C-clamp to peel the panel from the slide-out structure.
5. Check where adhesive, sealant and double face adhesive tape are on the structure and the panel back side, in order to be able to stick the new panel in the same way.
6. Check the tape width and use same width tape when installing new panels.

Caution: *Make sure the heat gun nozzle tip is at least 4" from surface.*

7. Use a heat gun and putty knife to remove the dried off adhesive and tape residue from the structure.

Warning: *Because of the adhesive toxicity, never use a buffer or other sanding method to remove it.*

16.4 SIDE PANELS INSTALLATION

NOTE
The side panels are made of aluminum, or of stainless steel in option. Use rivet of same material as the panels.

For surface cleaning and preparation, panel installation, and products needed, refer to the MTH side panel installation procedure described in section 18: BODY.

1. Protect adjacent surfaces with appropriate material;
2. Refer to figure 41 for 1/16x1/4 double face adhesive tape location on structure;
3. Apply Sika 206 G+P on the side panel as shown in figure 42 ;
4. Apply Sika Tack+Booster (triangular bead: 9mm width X 6mm high) as shown in Figure 43 and glue panel in place as shown in FIGURE 44;
5. Exert pressure and let dry for at least 90 minutes;
6. Smooth down the joint and remove glue in excess;
7. After drying, apply Sika 252 as a finishing joint;
8. Smooth down the joint.
9. Refer to section 16.11 for the finishing joint application procedure.

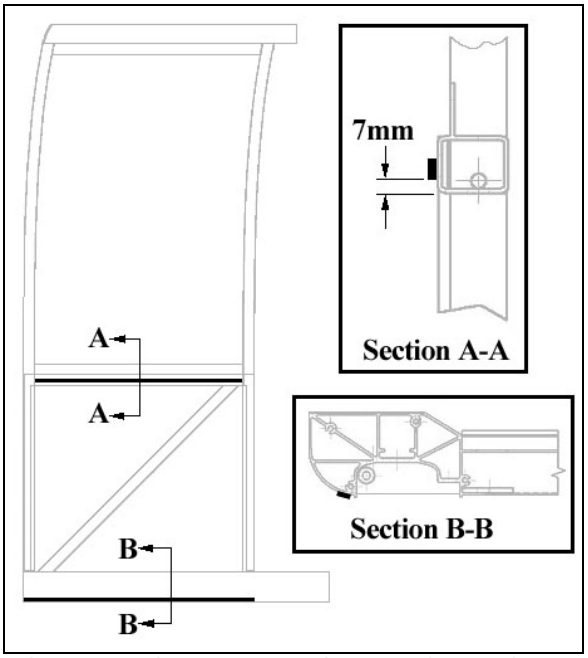

FIGURE 41 : SIDE PANEL INSTALLATION – DOUBLE FACE ADHESIVE TAPE APPLICATION ON THE SLIDE-OUT STRUCTURE

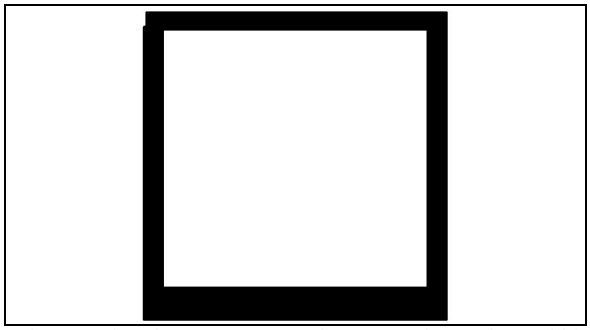

FIGURE 42 : SIDE PANEL INSTALLATION – SIKA 206 G+P APPLICATION

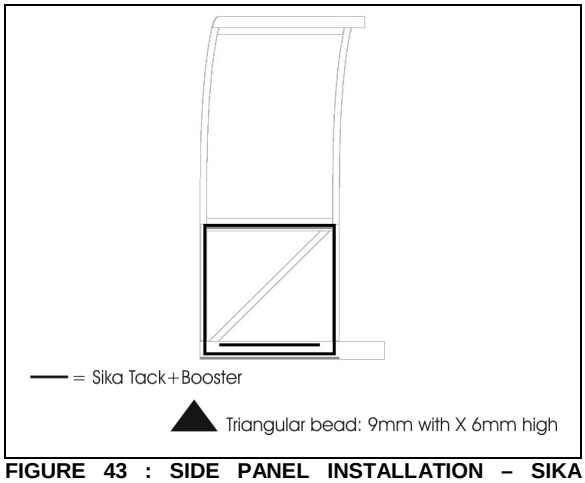

FIGURE 43 : SIDE PANEL INSTALLATION – SIKA TACK+BOOSTER APPLICATION

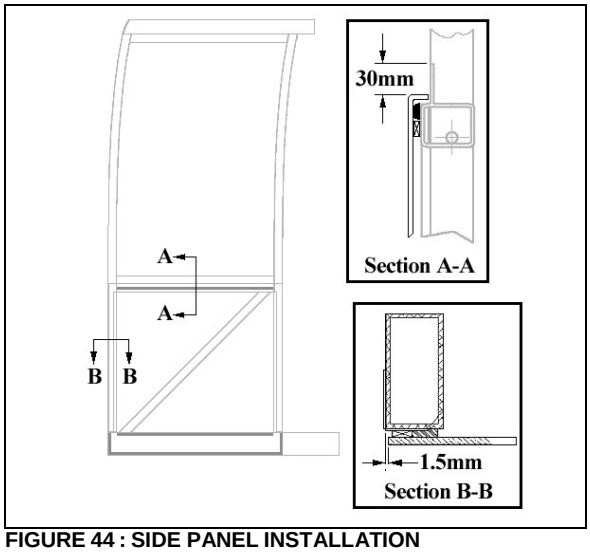

FIGURE 44 : SIDE PANEL INSTALLATION

16.5 TOP AND BOTTOM PANEL REMOVAL

NOTE
The top and bottom panels are made of aluminum sheets.

1. Remove the slide-out (according to the Slide-Out Removal Procedure. Ask to your Prevost service representative).
2. Insert a flat screwdriver between the panel and the slide-out structure, and unstick the panel from the structure.
3. Use C-clamp to peel the panel from the slide-out structure.
4. Check where adhesive, sealant and double face adhesive tape are on the structure and the panel back side, in order to be able to stick the new panel in the same way.
5. Check the tape width and use same width tape when installing new panels.
6. Use a heat gun and putty knife to remove the dried off adhesive and tape residue from the structure.

Warning: *Because of the adhesive toxicity, never use a buffer or other sanding method to remove it.*

16.6 TOP AND BOTTOM PANEL INSTALLATION

NOTE
The top and bottom panels are made of aluminum sheets and need aluminum rivet.

For surface cleaning, preparation, panel installation and products needed, refer to the MTH side panel installation procedure described in section 18: BODY.

1. Protect adjacent surfaces with appropriate material.
2. Refer to FIGURE 45 for 1/16x1/4 double face adhesive tape location on structure;
3. Apply Sika 206 G+P on panel as shown in FIGURE 46;
4. Apply Sika Tack+Booster (triangular bead: 9mm width X 6mm high) has shown in FIGURE 47 and glue panel in place as shown in figure 48 & figure 49 ;
5. Exert pressure and let dry for at least 90 minutes;
6. Smooth down the joint and remove glue in excess;
7. After drying, apply Sika 252 as a finishing joint;

8. Smooth down the joint.
9. Refer to section 16.11 for the finishing joint application procedure.

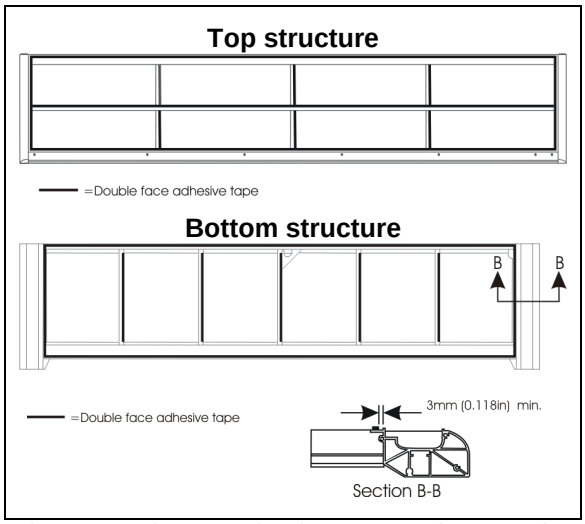

FIGURE 45 : TOP AND BOTTOM PANEL INSTALLATION - DOUBLE FACE ADHESIVE TAPE APPLICATION

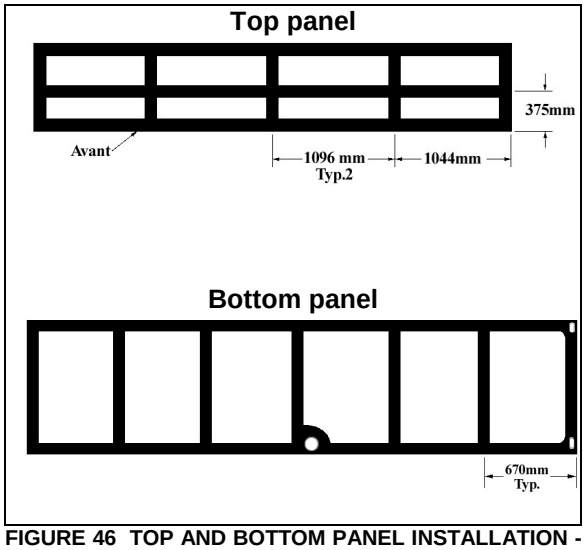

FIGURE 46 TOP AND BOTTOM PANEL INSTALLATION - SIKA 206 G+P APPLICATION

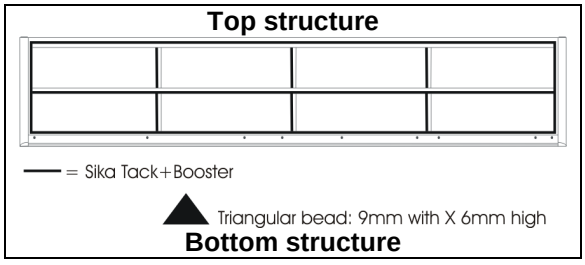

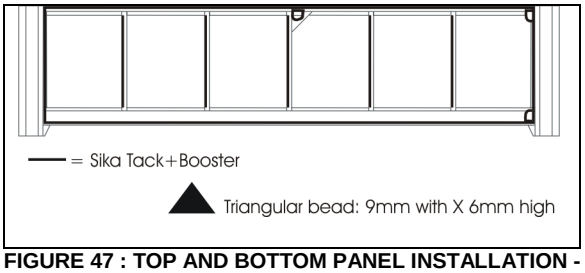

FIGURE 47 : TOP AND BOTTOM PANEL INSTALLATION - SIKA TACK+BOOSTER APPLICATION

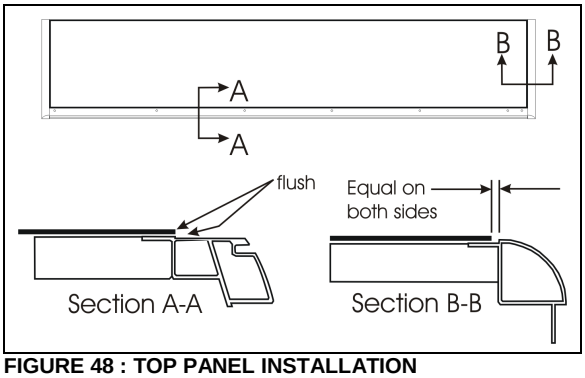

FIGURE 48 : TOP PANEL INSTALLATION

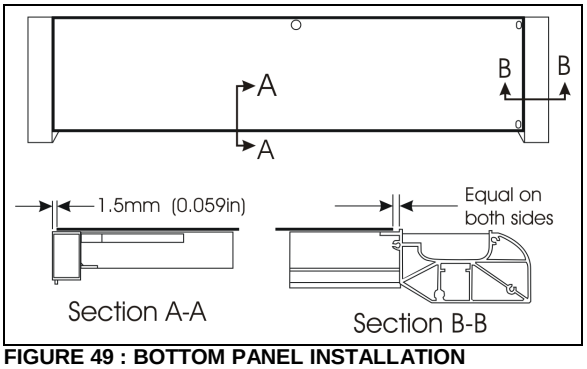

FIGURE 49 : BOTTOM PANEL INSTALLATION

NOTE
The removal and installation procedures are based on standard service methods described in section 18: BODY. Refer to these procedures for tools and adhesives specifications.

Warning: *Always wear safety equipment when working with glass and chemical adhesives.*

16.7 WINDOWS REMOVAL

1. Remove the slide-out.
2. If needed, remove the exterior extrusion as described in section 1.3.

Caution: *Be careful not to damage the adjacent surfaces.*

3. With a knife or a wire, cut the sealant and the adhesive between the windows and the structure. Make sure not to damage the rubber seal between the windows.
4. With a helper, remove the window from the slide-out.

16.8 FIXED WINDOWS INSTALLATION

Refer to procedures described in section 18: BODY of the maintenance manual for details.

1. Clean and prepare the windows and the slide-out structure surfaces with appropriate cleaner, abrasives and primers.
2. If necessary, install the rubber seals as per FIGURE 50 & FIGURE 51 . Press the seal against the structure with a roller.

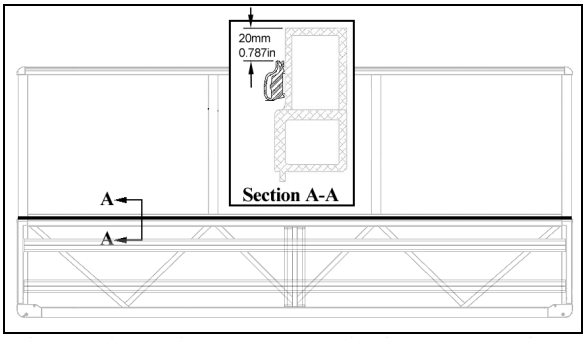

FIGURE 50 : FACE FIXED WINDOWS - RUBBER SEAL INSTALLATION

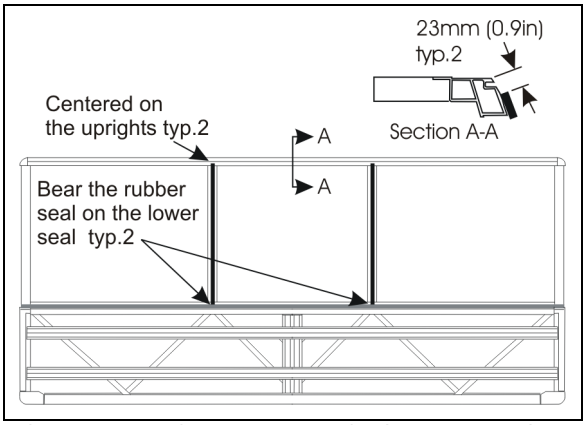

FIGURE 51 : FACE FIXED WINDOWS - RUBBER SEAL INSTALLATION

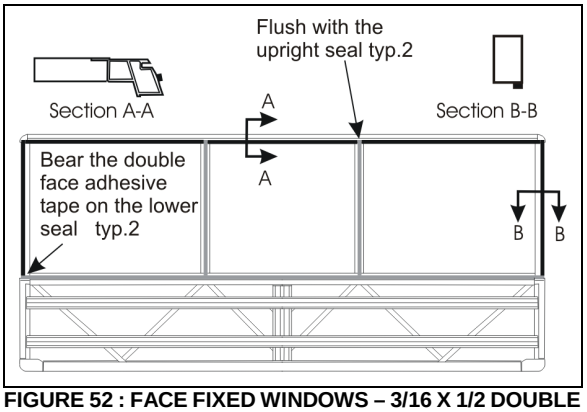

FIGURE 52 : FACE FIXED WINDOWS – 3/16 X 1/2 DOUBLE FACE ADHESIVE TAPE INSTALLATION

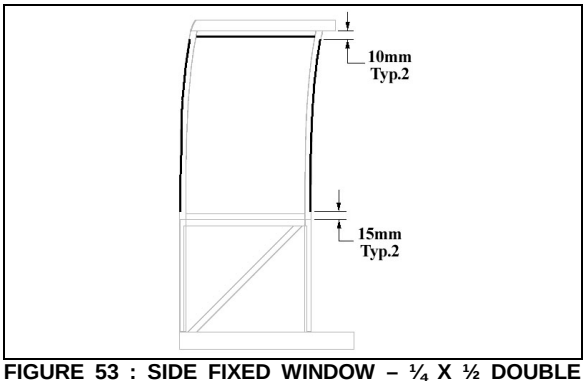

FIGURE 53 : SIDE FIXED WINDOW – ¼ X ½ DOUBLE FACE ADHESIVE TAPE INSTALLATION

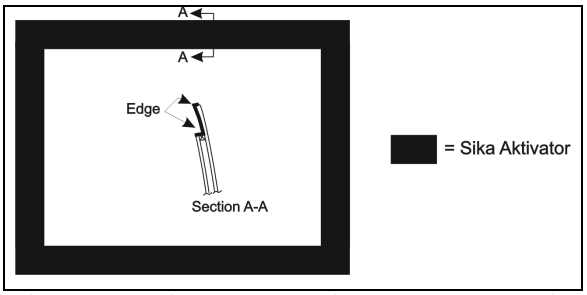

FIGURE 54 : FACE FIXED WINDOW AND HALF-WINDOW – SIKA AKTIVATOR

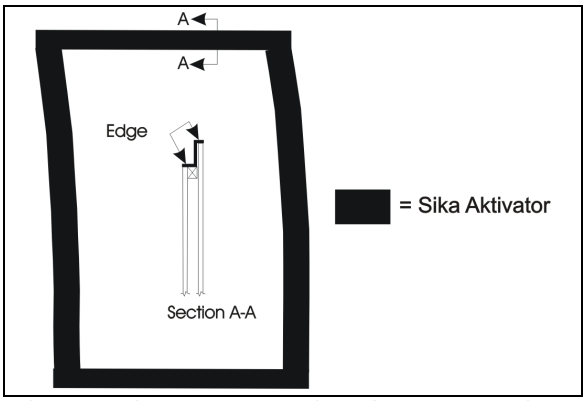

FIGURE 55 : SIDE FIXED WINDOW – SIKA AKTIVATOR

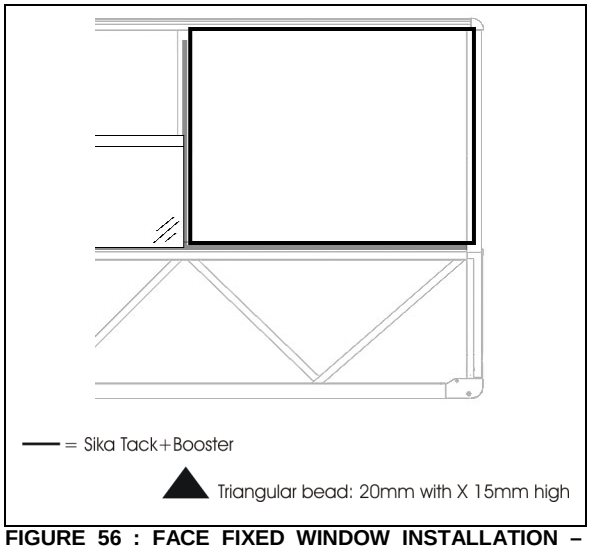

FIGURE 56 : FACE FIXED WINDOW INSTALLATION – SIKA TACK+BOOSTER



FIGURE 57 : FACE FIXED HALF-WINDOW INSTALLATION – SIKA TACK+BOOSTER

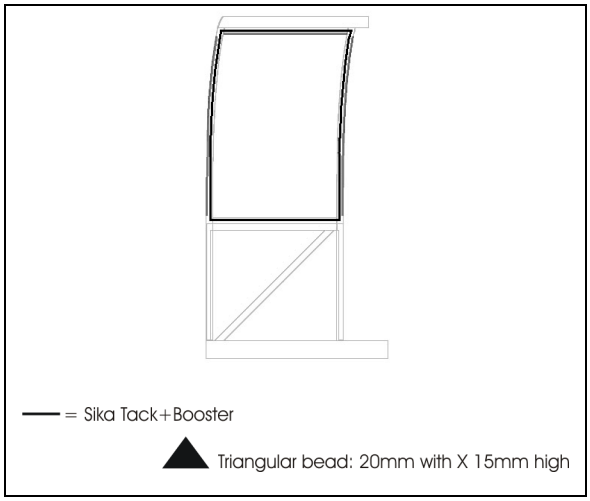

FIGURE 58 : SIDE FIXED WINDOW – SIKA TACK + BOOSTER

3. Apply appropriate double face self adhesive tape on the slide-out structure (sees FIGURE 52 for face fixed windows or FIGURE 53 for side fixed window).
4. Clean window with appropriate window cleaner.
5. Apply Sika Aktivator on the window pane as per FIGURE 54 or FIGURE 55.
6. Apply Sika Tack+Booster as per FIGURE 56 FIGURE 57 or FIGURE 58 (triangular bead: 20mm width X 15mm high).
7. Install the windows on the slide-out structure (see FIGURE 59 or FIGURE 60).
8. Press the jigs on the windows and wait for the adhesive to dry (90 minutes minimum).
9. After drying, apply Sika 221 as a finishing joint. Clean excess with Sika 208.
10. Refer to section 16.11 for the finishing joint application procedure.

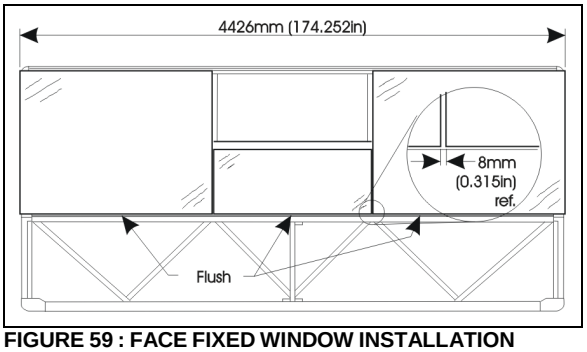

FIGURE 59 : FACE FIXED WINDOW INSTALLATION

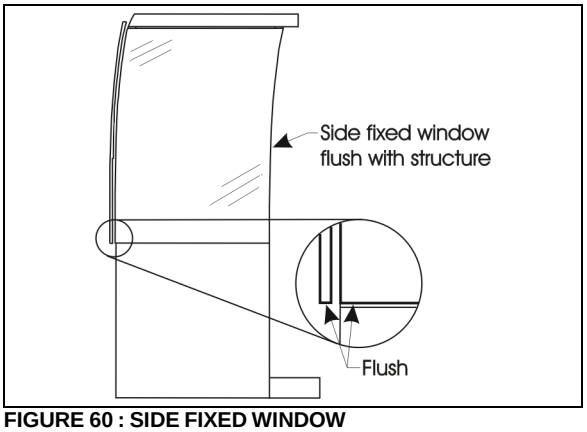

FIGURE 60 : SIDE FIXED WINDOW

16.9 AWNING WINDOW INSTALLATION

1. Clean and prepare the windows and the slide-out structure surfaces with appropriate cleaner, abrasives and primers.
2. Glue on the structure horizontal member, 4 rubber bumpers (#5061020), placing them 2 by 2 to have a total thickness of 1/16" (FIGURE 61).

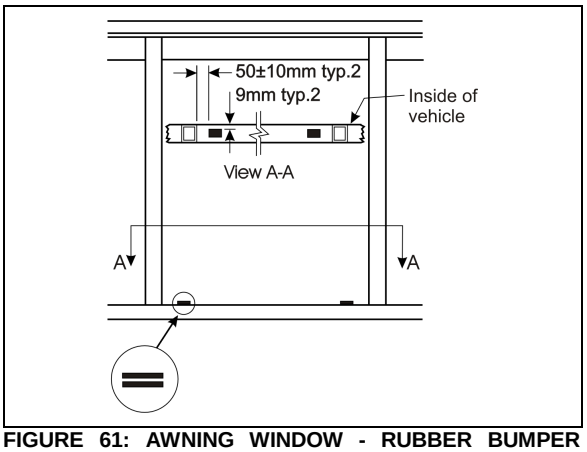

FIGURE 61: AWNING WINDOW - RUBBER BUMPER INSTALLATION

3. Glue 4 rubber bumpers (#790610) on the awning window frame as per FIGURE 62.

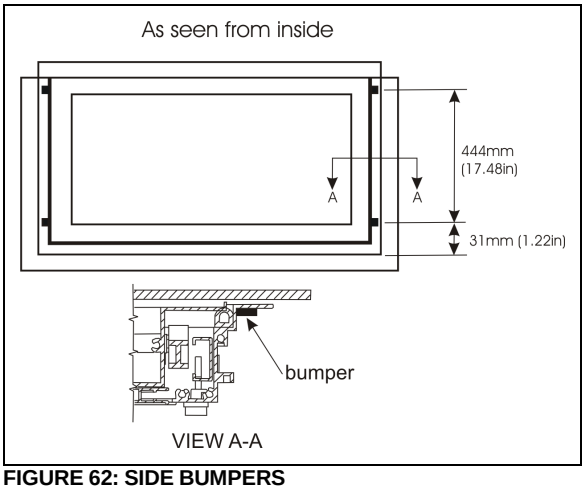

FIGURE 62: SIDE BUMPERS

4. Place masking tape on the inside of the frame as per FIGURE 63.

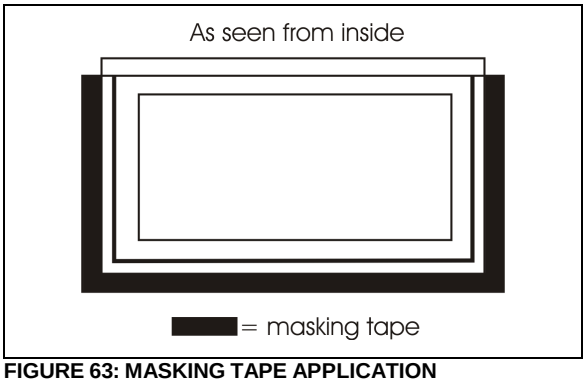

FIGURE 63: MASKING TAPE APPLICATION

5. Apply Sika 255 in the upper and lower frame corner as per FIGURE 64.

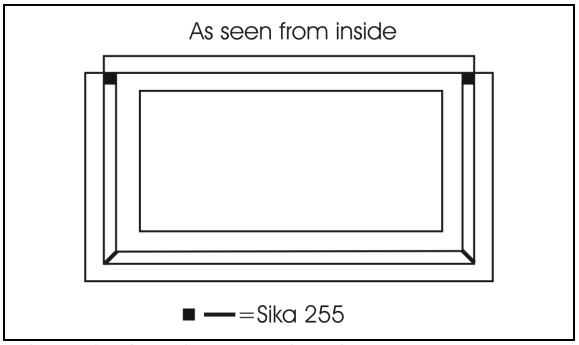

FIGURE 64: SIKA 255 APPLICATION

6. Apply Sika Aktivator as per FIGURE 65.
7. Apply Sika 255 as per FIGURE 66 (triangular bead: 10mm width X 10mm high).

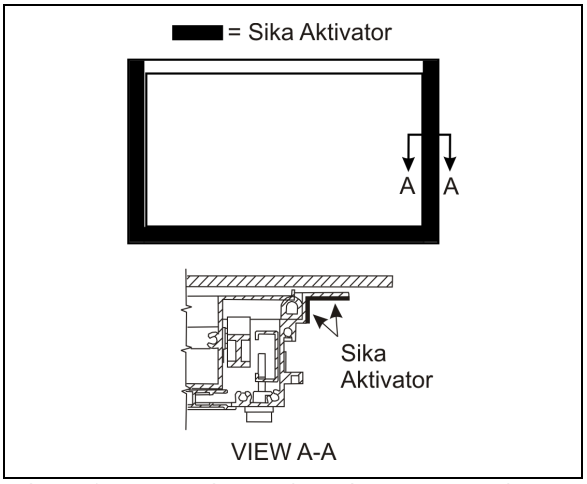

FIGURE 65 : AWNING WINDOW – SIKA AKTIVATOR

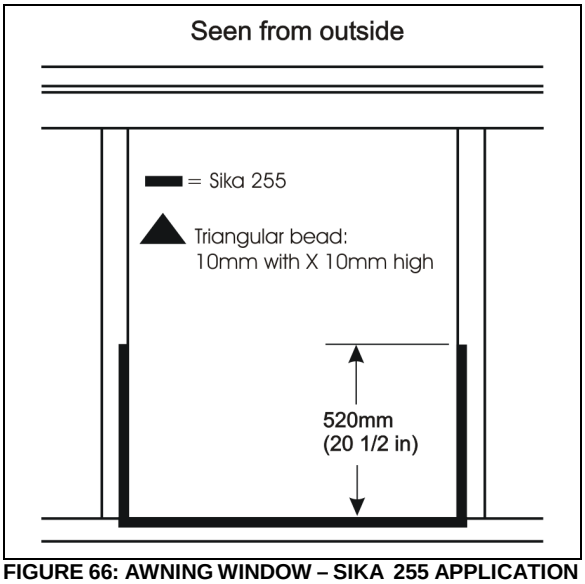

FIGURE 66: AWNING WINDOW – SIKA 255 APPLICATION

8. Install the awning window centered in the opening. Press the window slightly. The awning window must be kept closed.
9. While a helper is pressing on the window from outside, install the awning window clamping frame and tighten screws according to the sequence shown in FIGURE 67.

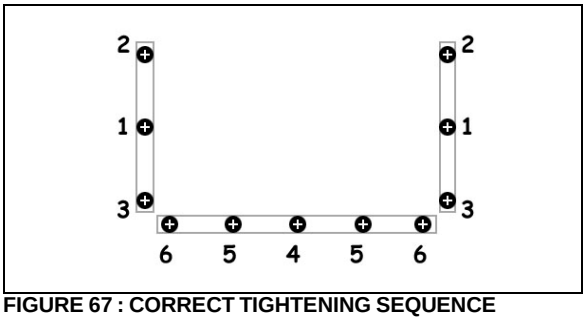

FIGURE 67 : CORRECT TIGHTENING SEQUENCE

10. Open the awning window manually and smooth down the joint (FIGURE 68) and remove glue in excess with Sika 208.

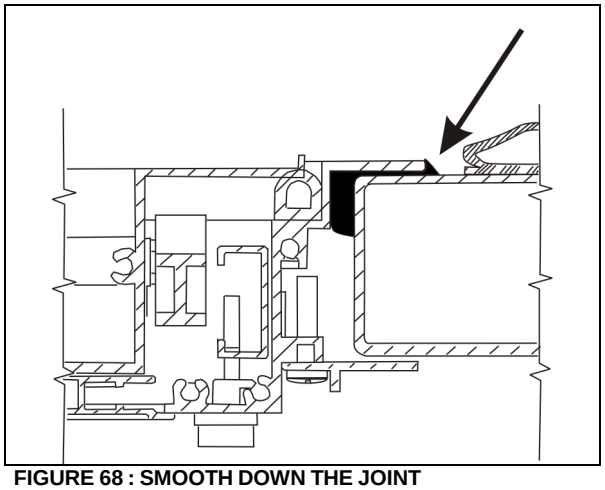

FIGURE 68 : SMOOTH DOWN THE JOINT

11. Using Sika 252 or 255, seal the upper corner of the awning window, both side (FIGURE 69).
12. Using Sika 252 or 255, seal the chink between the structure vertical member and the awning window, both side (FIGURE 70).

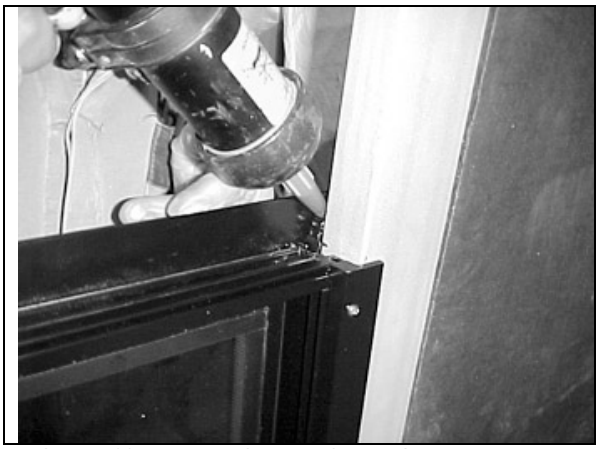

FIGURE 69 : AWNING WINDOW – SEAL THE UPPER CORNERS



FIGURE 70 : AWNING WINDOW – SEAL THE CHINK

16.10 SLIDING WINDOW INSTALLATION

1. Clean and prepare the windows and the slide-out structure surfaces with appropriate cleaner, abrasives and primers. Clean surfaces with anti-silicone.
2. Apply Sika Aktivator on sliding window as per FIGURE 71.
3. Apply Sika Aktivator on the structure as per FIGURE 72.
4. Apply Sika 252 as per FIGURE 73 (triangular bead: 20mm width X 10mm high).
5. Install the sliding window centered in the opening. Press the window slightly. The window must be kept closed.
6. While a helper is pressing on the window from outside, install the awning window clamping frame and tighten screws according to the sequence shown in FIGURE 74.
7. Remove glue in excess with Sika 208.
8. Using Sika 252 or 255, seal the inside upper corner of the sliding window, both side (FIGURE 75).
9. Using Sika 252 or 255, seal the chink between the structure vertical rubber seal and the sliding window, both side (FIGURE 76).

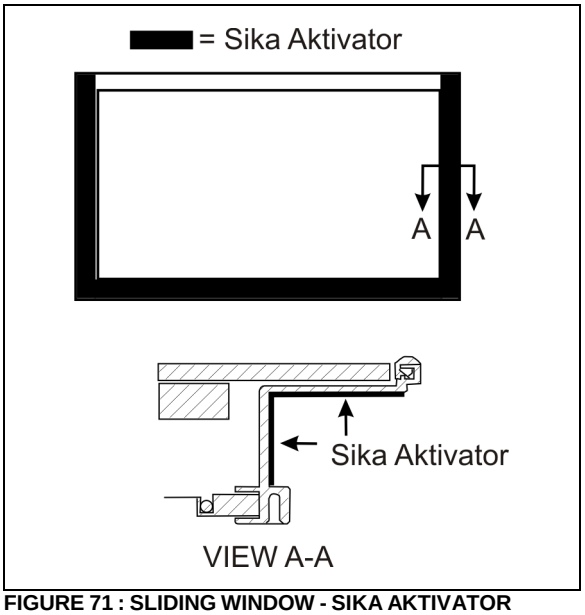

FIGURE 71 : SLIDING WINDOW - SIKA AKTIVATOR

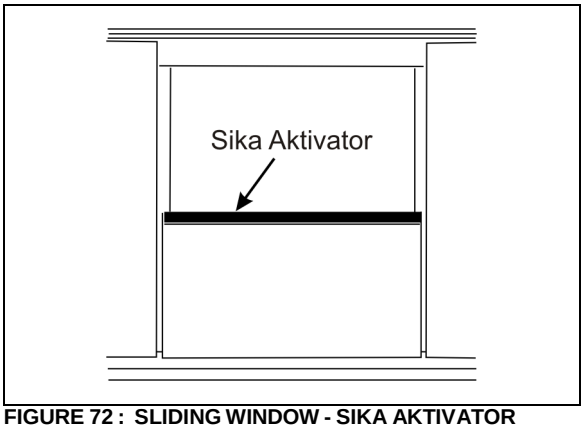

FIGURE 72 : SLIDING WINDOW - SIKA AKTIVATOR

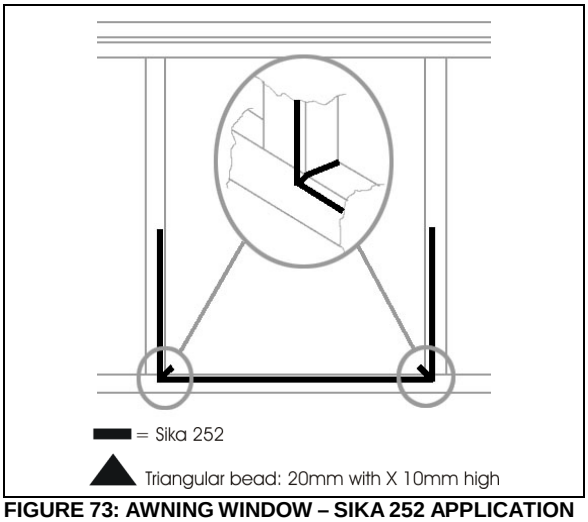

FIGURE 73: AWNING WINDOW – SIKA 252 APPLICATION

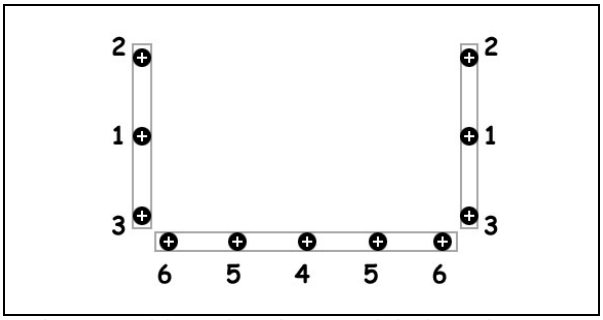

FIGURE 74 : CORRECT TIGHTENING SEQUENCE

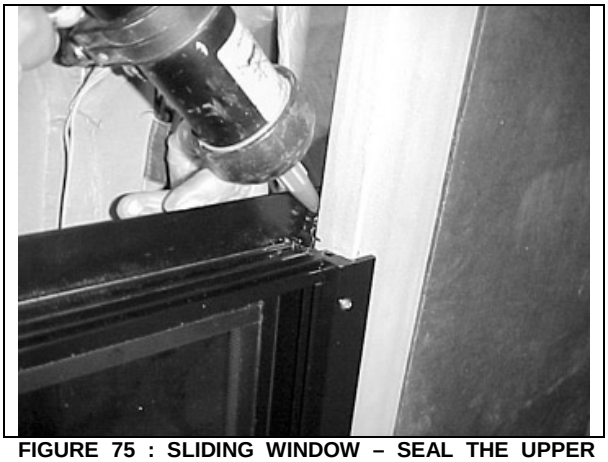

FIGURE 75 : SLIDING WINDOW – SEAL THE UPPER CORNERS



FIGURE 76 : SEAL

16.11 FINISHING JOINT

The following procedure applies to section 16.11.1 up to 16.11.4.

For surface cleaning and preparation, tools, cleaner, adhesives and other product needed, refer to the MTH side panel installation procedure described in section 18: BODY.

1. Place masking tape to protect surfaces from smudge.
2. Apply Sika 221.
3. Using soapy water, smooth down the joint with your finger (wear vinyl gloves).

16.11.1 Slide-out face

Apply Sika 221 between the face panel and the structural member

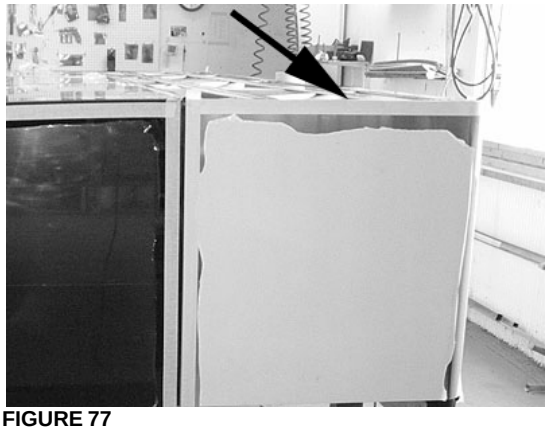

FIGURE 77

Apply Sika 221 between the top of face window and the structural member

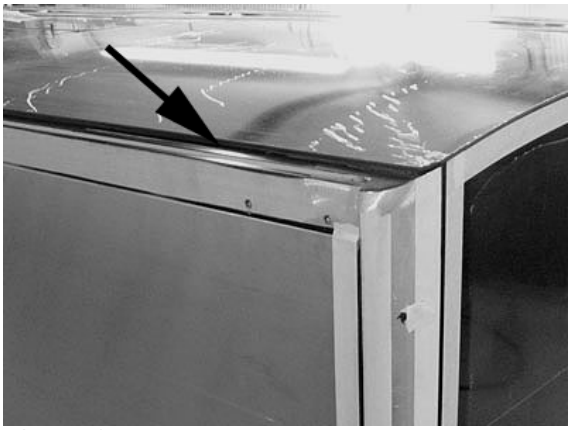

FIGURE 78

16.11.2 Slide-out side

Apply Sika 221 between the top of side window and the structural member

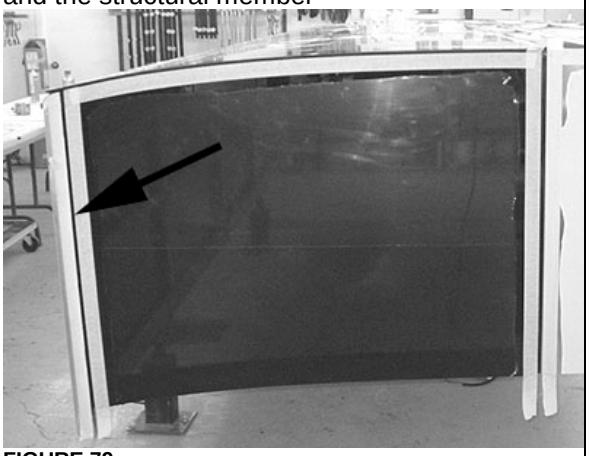

FIGURE 79

Apply Sika 221 between the bottom of side window and top of side panel

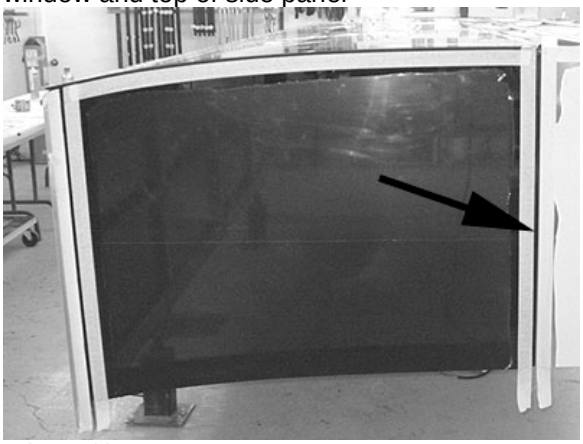

FIGURE 80

Apply Sika 221 between side window and top of face fixed window

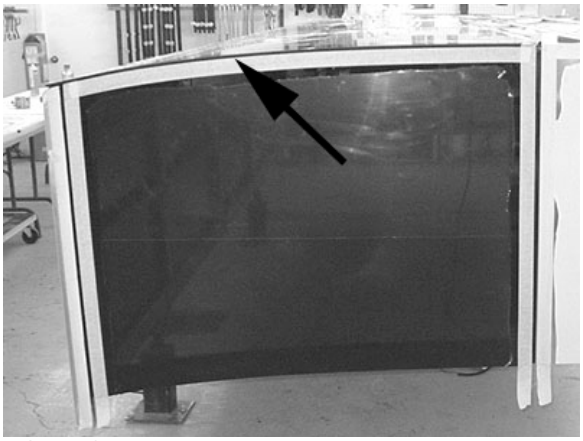

FIGURE 81

16.11.3 Slide-out bottom

Apply Sika 221 between bottom edge of side panel and structural member

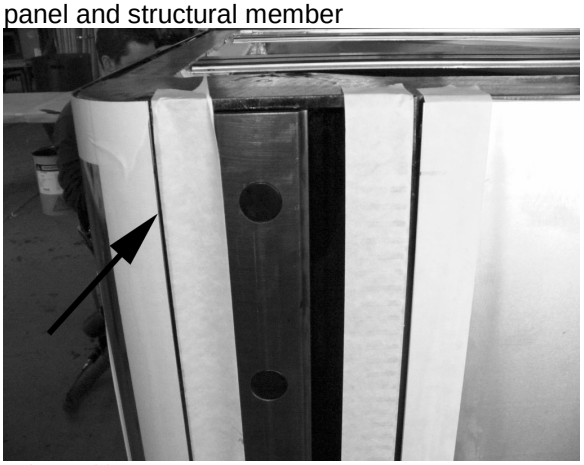

FIGURE 82

Apply Sika 221 between edge of bottom panel and structural member

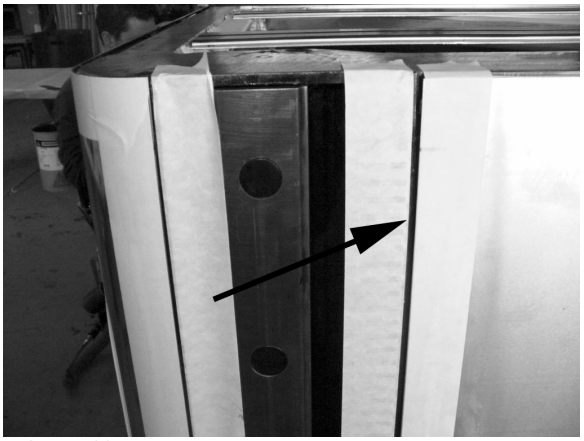

FIGURE 83

Apply Sika 221 between the bottom panel and the magnets

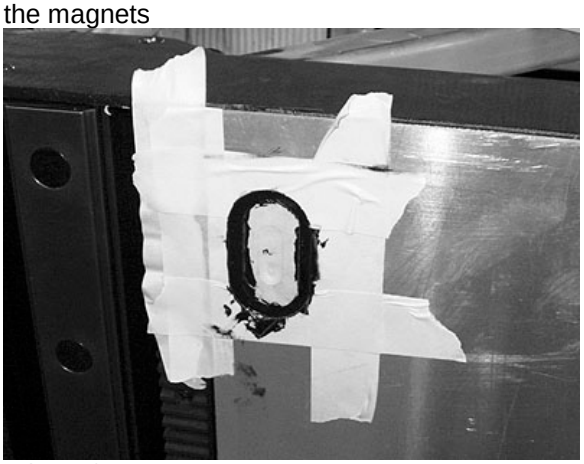

FIGURE 84

Apply Sika 221 around the security pin cavity



FIGURE 85

16.11.4 Top of Slide-out

Apply Sika 221 between edge of top panel and structural member

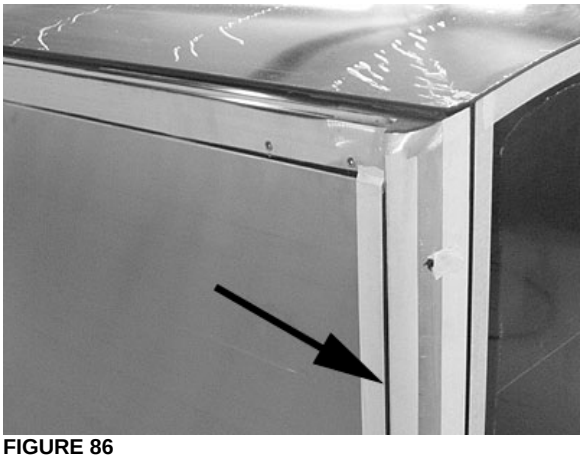

FIGURE 86

17 WELDING PRECAUTION

⚠ CAUTION ⚠

Prior to arc welding on the vehicle, refer to the Welding Precautions Procedure Prior To Welding" in section 00 GENERAL of this manual to avoid serious damage to the vehicle components.

18 SLIDE-OUT MANUAL OVERRIDE PROCEDURES

In case of power retracting system failure, it is possible to use the manual override procedure to retract or extend the slide-out.

The manual override procedures consist in rotating the slide-out motor shaft extension using a cordless power drill with a 3/8" hexagonal bit.

However, it is very important to follow all the instructions very carefully to assure that the inflatable seal or the retraction mechanisms are not damaged.

18.1 PRELIMINARY CONDITIONS FOR MANUAL OVERRIDE PROCEDURE

Before using the slide-out manual override procedures, make sure that the problem cannot be solved by one of the following simple checks:

- Make sure that none of the breakers are tripped (the breakers are located inside the VEC on the slide-out control panel (FIGURE 88) and the main slide-out breaker is located in the engine R.H. side access compartment (FIGURE 89)).
- Make sure the barking brake is applied and that transmission is in the "NEUTRAL" position.
- Make sure the voltage is high enough by running the engine at fast idle or having the battery charger connected.

⚠ CAUTION ⚠

Before extending or retracting the slide-out, always open a window to avoid movement restriction and to prevent the motor from stopping in overcurrent because of a vacuum or pressure build up inside the vehicle.

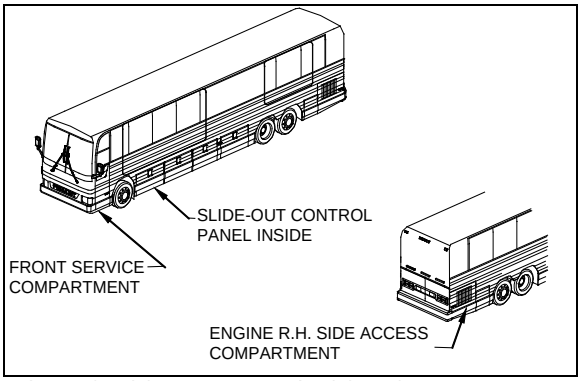

FIGURE 87: COMPARTMENTS LOCATION

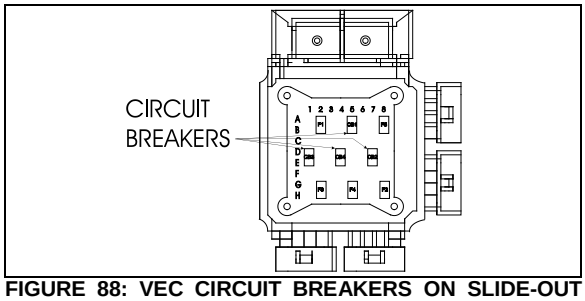

FIGURE 88: VEC CIRCUIT BREAKERS ON SLIDE-OUT CONTROL PANEL

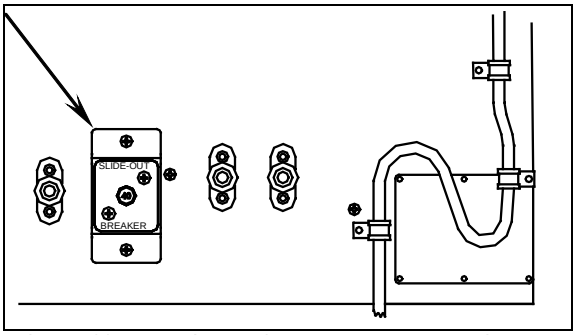

FIGURE 89: MAIN SLIDE-OUT BREAKER IN ENGINE R.H. SIDE ACCESS COMPARTMENT

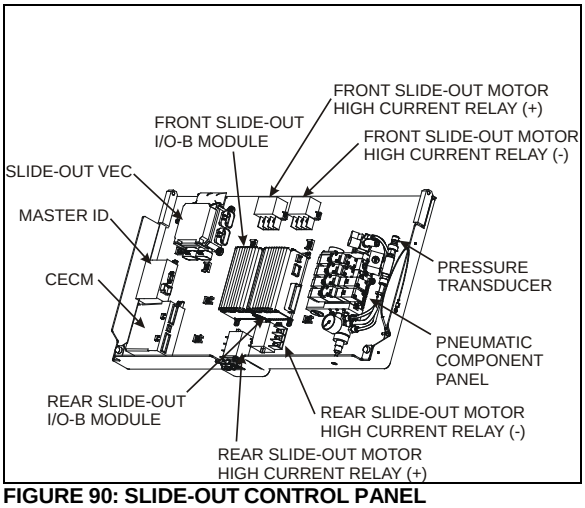

FIGURE 90: SLIDE-OUT CONTROL PANEL

18.1.1 Manual retracting procedure – Front and rear slide-out

1. Turn the ignition switch to the "OFF" position, and remove the ignition key for more safety.
2. Deflate the inflatable seal by using the relieving shut-off valve located on the pneumatic component panel (FIGURE 91).
3. Turn the handle clockwise to deflate the seal. Make sure the pressure indicator reading is "0 psi".

⚠ CAUTION ⚠

The pressure in the inflatable seal must be completely relieved to prevent any damage to the seal.

NOTE

When air pressure is relieved using the shut-off valve, the normal extending and retracting operation cycle is disabled, for that reason the slide-out cannot be moved using the handheld control.

4. To move the slide-out, use a cordless power drill with a 3/8" hexagonal bit on the shaft extension of the slide-out motor.
5. Rotate the slide-out motor shaft extension with the power drill until the slide-out comes to its closed position (FIGURE 92).
6. Once the slide-out room is lined up to its closed position, remove the tool from the motor.

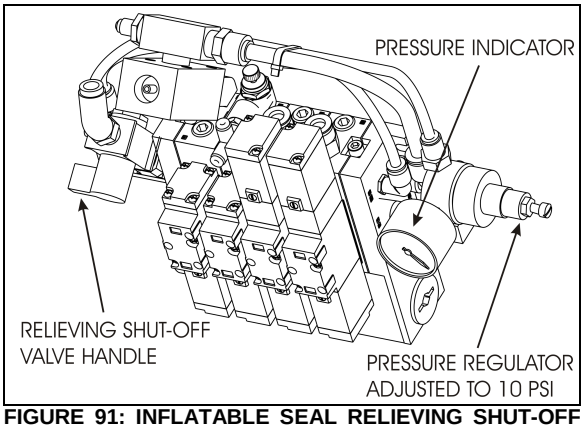

FIGURE 91: INFLATABLE SEAL RELIEVING SHUT-OFF VALVE

NOTE

*The **front slide-out motor** is located inside the 2nd baggage compartment while the **rear slide-out motor** is accessible from inside the vehicle, under the bed structure.*

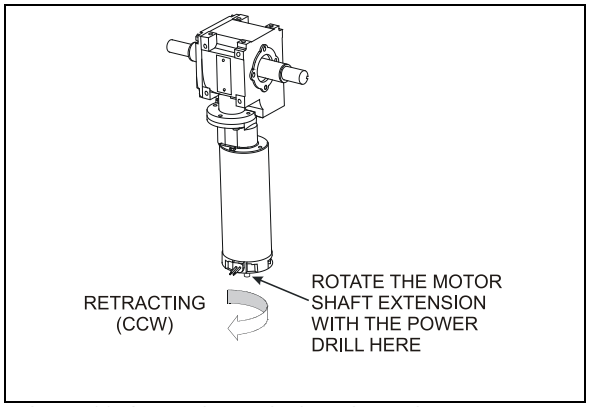

FIGURE 92: SLIDE-OUT MOTOR ROTATION

⚠ CAUTION ⚠

Slow down on the closing speed as the slide-out approaches its closed position. As soon as the "in limit" stoppers come in contact with their bearing surface, stop immediately the power drill rotating movement. Not doing so could overload the drive mechanism and cause damage to the reduction gearbox.

4. Finally, the inflatable seal can be re-inflated by turning the shut-off valve handle counterclockwise. Check the pressure gage on the inflatable seal regulator to see if the pressure is increasing to 10 psi (FIGURE 93).

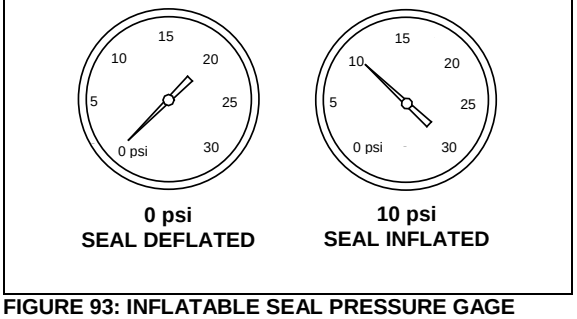

FIGURE 93: INFLATABLE SEAL PRESSURE GAGE

NOTE

The slide-out control system inhibits transmission range selection to prevent the vehicle from moving if the slide-out is not in its full "IN" position.

18.1.2 Manual extending procedure – Front and rear slide-out

1. Apply barking brake to disengage the security pin from the receptacle.
2. Turn the ignition switch to the "OFF" position, and remove the ignition key for more safety.
3. Deflate the inflatable seal by using the relieving shut-off valve located on the pneumatic component panel (FIGURE 91). Turn the handle clockwise to deflate the seal. Make sure the pressure indicator reading is "0 psi".

⚠ CAUTION ⚠

The pressure in the inflatable seal must be completely relieved to prevent any damage to the seal.

NOTE

When air pressure is relieved using the shut-off valve, the normal extending and retracting operation cycle is disabled, for that reason the slide-out cannot be moved with the handheld control.

4. To move the slide-out, use a cordless power drill with a 3/8" hexagonal bit on the shaft extension of the slide-out motor.
5. Rotate the slide-out motor shaft extension with the power drill until the slide-out comes to its opened position (FIGURE 94).
6. Once the slide-out is lined up to its opened position, remove the tool from the motor.

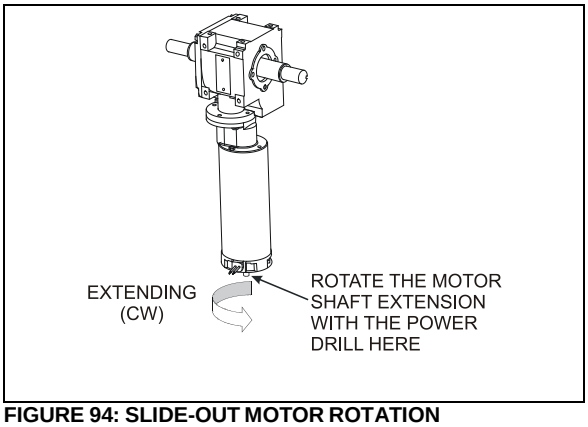

FIGURE 94: SLIDE-OUT MOTOR ROTATION

NOTE
*The **front slide-out motor** is located inside the 2nd baggage compartment while the **rear slide-out motor** is accessible from inside the vehicle, under the bed structure.*

⚠ CAUTION ⚠
Slow down on the closing speed as the slide-out approaches its extended position. As soon as the "out limit" stoppers come in contact with their bearing surface, stop immediately the power drill rotating movement. Not doing so could overload the drive mechanism and cause damage to the reduction gearbox.

7. Finally, the inflatable seal can be re-inflated by turning the shut-off valve handle counterclockwise. Check the pressure gage on the inflatable seal regulator to see if the pressure is increasing to 10 psi (FIGURE 94).

NOTE
The slide-out control system inhibits transmission range selection to prevent the vehicle from moving if the slide-out is not in its full "IN" position.

19 SLIDE-OUT MAXIMUM LOAD

Front slide-out:
Maximum load with vehicle at stand still (retracted or extended) ……1500 lb
Maximum load with vehicle moving or slide-out moving ……1200 lb[1]

Rear slide-out:
Maximum load with vehicle at stand still (retracted or extended) …..1500 lb
Maximum load with vehicle moving or slide-out moving ……1000 lb [1]

NOTE
Maximum load includes people weight and equipment added by the converters in the slide-out

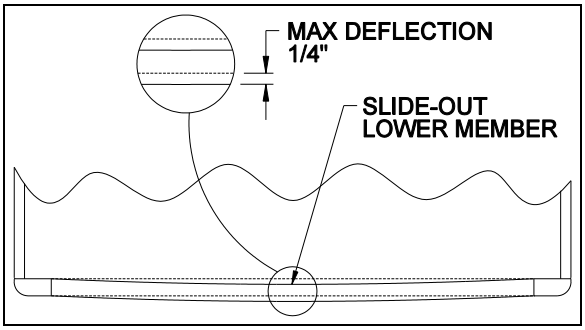

FIGURE 95 : FRONT SLIDE-OUT DEFLECTION

[1] When the load is distributed in the slide-out to prevent a deflection of the inside lower member over ¼" that could damage the seal.

⚠ CAUTION ⚠

Never remove the structural reinforcement angle brackets inside the baggage compartments. Doing so could lead to termination of the warranty coverage concerning the structural integrity.

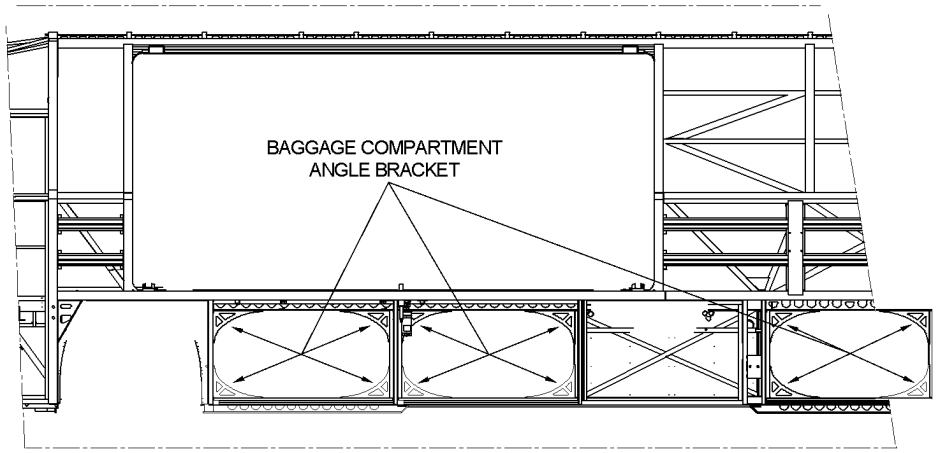

20 CONVERSION CHECKLIST

The converter should check these points before closing the walls covering the roof reinforcing rod and the pinions:

1. Check that the front slide-out exterior panels are parallel with the vehicle panels when retracted. If not, readjust the tilt.
2. Check that the slide-out is straight when completely extended, and that it leans against all inner stoppers.
3. Make sure the vehicle upper member is parallel with the front slide-out structure. If not, readjust the roof reinforcing rod. This may be affected by the loading on the roof.
4. Make sure the front slide-out lower member deflection is within 1/4". If not, redistribute the slide-out load.
5. Check the whole slide-out mechanism good functioning. The slide-out should retract and extend smoothly without vibration.

Final check:

- Make sure the slide-out air pressure inlet valve is completely opened.

- Check the inflatable seal air pressure on the pressure regulator. The pressure should be 10 psi.

21 TROUBLESHOOTING

21.1 ERROR CONDITION OR MISSING OPERATION CONDITION

When an error condition or a missing operation condition is present on a slide-out, the green indicator light on its respective handheld control starts blinking upon releasing of the IN/OUT rocker switch.
Turning the ignition OFF and ON again, will stop the blinking and reset the fault. If the error condition or a missing operation condition is still present, the blinking will start again the next time that the slide-out is operated. So, to get a fault diagnostic, use the MCD right after operating the slide-out without cycling the ignition switch.

NOTE
It is of the utmost importance to have a MCD (message center display) in working condition because it is the most important tool to achieve troubleshooting on a multiplex vehicle.

Fault diagnostic

To get more specific information about the error condition or the missing operation condition, request a diagnostic from the slide-out CECM using the dashboard message center display (MCD). Check if there are active errors in the slide-out electrical system. With the SYSTEM DIAGNOSTIC menu, highlight FAULT DIAGNOSTIC and then highlight ELECTRICAL SYSTEM to request a diagnostic of the electrical system from the CECM. Press the enter key. If applicable, the MCD shows the device ID, the fault messages or fault codes recorded. When more than one fault is recorded, an arrow pointing down appears on the right of the display. Use the down arrow to see all the fault messages.
Once the problem corrected, the MCD still shows the fault as being active. You have to leave the FAULT DIAGNOSTIC menu, wait approximately 20 to 30 seconds and then return to FAULT DIAGNOSTIC to request a new diagnostic of the ELECTRICAL SYSTEM from the CECM. The MCD should display the fault as being inactive.

21.2 TROUBLESHOOTING – OPERATING CONDITIONS & CONTROL

PROBLEM	CAUSE	CORRECTIVE ACTION
The slide-out functions normally but the handheld control green indicator light blinks	Something is defective and may eventually create an issue if not repaired. The problem may be: A. Faulty limit sensor causing the slide-out to stop in overcurrent; B. CAN network problem causing the transmission inhibit safety to be non-operational; C. Vacuum pressure transducer disconnected or damaged (vacuum is applied for a fixed	Request a diagnostic from the electrical system using the MCD SYSTEM DIAGNOSTIC menu and refer to the Fault Message list in section 21.4.

PROBLEM	CAUSE	CORRECTIVE ACTION
	time of 7 seconds); D. Seal inflating valve solenoid open circuit (the seal is not re-inflated and water can penetrate in the vehicle); E. Security pin valve solenoid open circuit (the security pin is not extended while vehicle is riding).	
The slide-out does not extend	A. The parking brake is not seen by the controller as being applied; B. Not enough air pressure in the accessory air tank to permit proper operation of the vacuum generator; C. Faulty vacuum generator, connection to the vacuum generator open, seal deflating valve solenoid open circuit; D. I/O-B module output defective, regulated 5-volt supply to sensors shorted to ground, “out limit” sensor shorted to ground, connection to the motor negative relay solenoid open circuit;	A. Make sure the parking brake is applied. Confirm parking brake application with the parking brake light on the telltale panel. B. Run the engine at fast idle a few minutes to increase air pressure in the accessory air tank and try again. C. Turn the relieving shut-off valve handle clockwise to deflate the inflatable seal, disconnect the pressure transducer. Do not forget to reconnect the pressure transducer and to close the relieving shut-off valve. Failure to do so could damage the seal and lead to water infiltration; D. Operate the slide-out with the manual override procedures.
The slide-out does not retract	A. Not enough air pressure in the accessory air tank to permit proper operation of the vacuum generator; B. Faulty vacuum generator, connection to the vacuum generator open, seal deflating valve solenoid open circuit; C. I/O-B module output defective, “in limit” sensor shorted to ground, connection to the motor positive relay solenoid open circuit;	A. Run the engine at fast idle a few minutes to increase air pressure in the accessory air tank and try again. B. Turn the relieving shut-off valve handle clockwise to deflate the inflatable seal, disconnect the pressure transducer. CAUTION, do not forget to reconnect the pressure transducer and to close the relieving shut-off valve. Failure to do so could damage the seal and lead to water infiltration; C. Operate the slide-out with the manual override procedures.
When extending, the slide-out stops after having extended by 1 inch	A. The security pin valve solenoid circuit is shorted to (+) 24-volt and the pin remains engaged;	A. Disconnect air supply from the safety pin cylinder;

PROBLEM	CAUSE	CORRECTIVE ACTION
Transmission DRIVE range or REVERSE cannot be selected (the slide-out telltale light is illuminating).	A. Slide-out not in full "in" position; B. Faulty “in limit” sensor. The slide-out is retracted but the controller doesn’t not see it as retracted.	A. Retract slide-out. B. Confirm that all slide-out are retracted. On the slide-out control panel, disconnect the 5 pins green connector on the I/O-B module to disable the transmission inhibit. CAUTION, this is a temporary measure, the vehicle must be serviced as soon as possible.

21.3 TROUBLESHOOTING - MECHANICAL COMPONENTS

PROBLEM	CAUSE	CORRECTIVE ACTION
Slide-out does not retract or extend when depressing the control switch.	A. Electrical motor failure; B. Speed reduction gearbox failure; C. Security pin still engaged in receptacle;	A. Replace motor. B. Inspect gearbox components, particularly: bronze wheel or first reduction stage output shaft. Replace damaged components. C. Disengage pin and check if air cylinder is damaged.
Slide-out is not straight once retracted or during retracting or extending operation.	A. Broken rack tooth; B. Faulty rack attachment; C. Faulty shaft key at speed reduction gearbox or jaw coupling; D. Pinion keyless bushing slipping; E. Shaft breaking; F. Flange bearing attachment loosen;	A. Replace rack. B. Tighten mounting bolts, apply proper torque and use Loctite threadlocker (replace rack if necessary). C. Replace key or component having a damaged keyway. D. Realign slide-out and apply proper torque to keyless bushing. E. Replace shaft. F. Reposition shaft and tighten flange bearing mounting bolts.
Slide-out moves out slightly when vehicle is traveling.	A. Lower "in limit" stoppers are not leaning against the structure at the moment when the "in limit" sensor detects the magnet;	A. Adjust the sensor position in order to have contact of the stoppers against the structure at the time when the system stops the slide-out retraction.
Slide-out moves when vehicle is moving.	A. Inflatable seal not inflated	A. Check seal condition and seal air supply system.
Slide-out retracts or extends difficultly.	A. Foreign matters accumulated in the linear bearing;	A. Inspect the linear bearing end seals to see if they are in good condition. If not, replace the end seals and clean the inside of linear bearing.
Slide-out oscillates vertically when retracting or extending	A. Linear bearing balls hardened due to a too heavy load; B. Linear bearing mounting bolts loosen;	A. If balls clearance is excessive, replace linear bearing. B. Tighten mounting bolts.
Slide-out vibrating or noisy when extending or retracting	A. Acetal plastic block rubbing against the slide-out structure; B. Worn-out anti-friction coating on wiper seal around slide-out; C. Lower acetal plastic block rubbing against rail;	A. Realign acetal plastic block. B. Replace wiper seal. C. Remove lower acetal plastic block and machine down 1mm (0.039").
Top of slide-out moves	A. Roof reinforcing rod misadjusted;	A. Readjust as per procedure.

PROBLEM	CAUSE	CORRECTIVE ACTION
sideways when vehicle is moving		
Slide-out does not retract up to its full "in" position	A. Interference between the exterior extrusion and the vehicle upper horizontal member above the slide-out;	A. Check for straightness of horizontal member and adjust the roof reinforcing rod. B. Check for outer wiper seal lip straightness on the slide-out roof.
Bottom of slide-out not flush with vehicle body	A. Broken or misadjusted lower "in limit" stopper; B. Lower "in limit" stoppers are not leaning against the structure at the moment when the "in limit" sensor detects the magnet; C. Acetal plastic block serving as leaning surface for lower "in limit" stopper broken or moved;	A. Replace or adjust lower "in limit" stopper. B. Adjust the sensor position in order to have contact of the stoppers against the structure when slide-out is stopped. C. Replace or adjust acetal plastic block proper position.
Top of slide-out not flush with vehicle body	A. Broken or misadjusted leveling or retaining screw; B. Faulty upper “in limit" stopper;	A. Check and replace screw. B. Replace upper “in limit" stopper.
Lower edge of slide-out not parallel with vehicle body opening	A. Faulty leveling and retaining screw (8 screws each side).	A. Inspect screw, replace and adjust slide-out level.
Watertightness problem	A. Inflatable seal and/or wiper seal damaged or unstuck; B. Insufficient air pressure in the seal; C. No air pressure in the slide-out pneumatic system; D. Sealant missing; E. Wiper seal draining hole clogged; F. Faulty water recovery pan; G. Faulty internal gutter;	A. Check both seals condition. B. Check the pressure regulator, the relieving shut-off valve and the seal valve condition. C. Check the slide-out air pressure inlet valve condition and the accessory air tank pressure. D. Check the exterior extrusion screws, the windows and the exterior panels sealant condition. E. Unclog draining hole. F. Check the recovery pan. G. Check internal gutter.
Knocking sound at end of travel when extending slide-out	A. Inner stoppers misadjusted;	A. Readjust the inner stoppers.
Knocking sound when parking brake is released	A. Security pin retracts too rapidly;	A. Adjust security pin air flow regulator.

PROBLEM	CAUSE	CORRECTIVE ACTION
Inflatable seal damaged or removed, or wiper seal unstuck from the structure.	A. Slide-out has been retracted or extended with the manual procedure with the inflatable seal not deflated; B. Pressure transducer malfunction; C. Faulty roof reinforcing rod adjustment; D. Seal valve malfunction; E. Excessive load in the slide-out; F. Slide-out not centered in the structure opening;	A. Always deflate the seal when manually retracting or extending the slide-out. B. Check the pressure transducer condition, replace if necessary. C. Readjust the roof reinforcing rod. D. Check the seal valve condition. E. Reduce load or distribute load evenly in order to respect the deflection criterion and slide-out load capacity. F. Readjust the slide-out height and center horizontally in opening.
Friction at end of travel when in full OUT position or at beginning of retraction	A. Interference between upper structure key and upper inner stopper;	A. Readjust the upper inner stopper.

21.4 SLIDE-OUT FAULT MESSAGE ON MESSAGE CENTER DISPLAY (MCD)

SID #	FAULT MESSAGE	TEXT	PROBABLE CAUSE	CORRECTIVE ACTION
1	Voltage Module A56	Value Too Low	Module A56 sees a Voltage less than 18 V on its power supply connector. Breaker, fuse or wiring harness open.	Check/ reset circuit breaker CBSo and CBSo1. Check/ replace fuse FSo5 Fix wiring harness
2	No Response Mod A56	Data Error	CECM module does not receive CAN communication from module A56. CAN connector A56 J3 Disconnected or CAN wiring harness open, or module A56 is defective.	Check connection A56 J3 Fix CAN wiring harness Replace module A56
3	Voltage Module A57	Value Too Low	Module A57 sees a voltage less than 18 V on its power supply connector. Breaker, fuse or wiring harness open.	Check/ reset circuit breaker CBSo and CBSo2. Check/ replace fuse FSo2 Fix wiring harness
4	No Response Mod A57	Data Error	CECM module does not receive CAN communication from module A57. CAN connector A57 J3 disconnected or CAN wiring harness open or module A57 is defective.	Check connection A57 J3 Fix CAN wiring harness Replace module
5	SldO Vacuum Sensor	Open Circuit	Pressure transducer disconnected. Faulty pressure transducer. Connection or wiring harness open.	Check/ replace vacuum transducer Check/ reconnect the connector SESo1 Fix wiring harness
		Shorted High	Pressure transducer is faulty Wiring harness shorted to 12v or 24v	Check/ replace vacuum transducer Fix wiring harness
6	SldO Seal Deaf Vac	Mechanical Fault	Does not reach vacuum level (-5 PSIG). Slide-out seal damaged or air leak in the seal deflating pneumatic circuit.	Check the seals and the pneumatic circuit.
7	SldO Motor/Limit se	Mechanical Or Electrical Fault	Slide-Out motor is activated for more than 5 seconds and the limit sensor from the departing end is still seen as active. Either the motor is defective and the slide-out is not moving or the limit sensor from the departing end is broken active.	If the slide-Out is not moving, then check the motor and its wiring. If the slide-out is moving, then check the limit sensor from the departing end. (If problem occurs when extending, check the in-limit sensor. If the problem occurred when retracting, then check the out-limit sensor).
8	SldO Park Br Signal	Mechanical Or Electrical Fault	Parking brake is not applied. Wire between parking brake switch and CECM is open.	Make sure the parking brake is applied and the parking brake telltale illuminates. Check / replace parking brake switch. Fix wiring harness.
		Shorted High	Wire between parking brake	Fix wiring harness.

SID #	FAULT MESSAGE	TEXT	PROBABLE CAUSE	CORRECTIVE ACTION
			switch and CECM is shorted to 12v or 24v.	
9	SldO Mot SpeedA Ctr	Shorted High	Wiring harness shorted to 12v or 24v	Fix wiring harness
		Current Above normal	Security pin or object stop the movement of a slide-out	Check / fix security pin functionality. Check / remove any object around the slide-out.
10	SldO Mot SpeedB Ctr	Shorted High	Wiring harness shorted to 12v or 24v	Fix wiring harness
		Current Above normal	Security pin or object stop the movement of a slide-out	Check / fix security pin functionality. Check / remove any object around the slide-out.
11	SldO Remote Led	Shorted High	LED or wiring harness shorted to 12v or 24v	Fix LED or wiring harness
		Shorted Low	Led or wiring harness shorted to ground	Fix LED or wiring harness
		Open Circuit	LED is broken. Bad connection on handheld control. Wiring harness is cut.	Check / fix remote LED or connection Check /fix wiring harness
		Current Above normal	Led or wiring harness shorted to 12v or 24v	Fix Led or wiring harness
12	SldO Seal Inf Sol	Shorted High	Solenoid or wiring harness shorted to 12v or 24v	Fix solenoid or wiring harness
		Shorted Low	Solenoid or wiring harness shorted to ground	Fix solenoid or wiring harness
		Open Circuit	Solenoid is broken or open. Bad connection on solenoid or bloc valve. Wiring harness is cut.	Check / fix solenoid or connection Check /fix wiring harness
		Current Above normal	Solenoid or wiring harness shorted to 12v or 24v	Fix solenoid or wiring harness
13	SldO Seal Def Sol	Shorted High	Solenoid or wiring harness shorted to 12v or 24v	Fix solenoid or wiring harness
		Shorted Low	Solenoid or wiring harness shorted to ground	Fix solenoid or wiring harness
		Open Circuit	Solenoid is broken or open. Bad connection on solenoid or bloc valve. Wiring harness is cut.	Check / fix solenoid or connection. Check /fix wiring harness
		Current Above normal	Solenoid or wiring harness shorted to 12v or 24v	Fix solenoid or wiring harness
14	SldO Vacc Gen Sol	Shorted High	Solenoid or wiring harness shorted to 12v or 24v	Fix solenoid or wiring harness
		Shorted Low	Solenoid or wiring harness Shorted to ground	Fix solenoid or wiring harness
		Open Circuit	Solenoid is broken or open. Bad connection on solenoid or bloc valve. Wiring harness is cut.	Check / fix solenoid or connection Check / fix wiring harness
		Current Above normal	Solenoid or wiring harness shorted to 12v or 24v	Fix Solenoid or wiring harness
15	SldO Mot Neg Rly	Shorted High	Relay coil or wiring harness shorted to 12v or 24v	Fix relay coil or wiring harness
		Shorted Low	Relay coil or wiring harness shorted to ground	Fix relay coil or wiring harness

SID #	FAULT MESSAGE	TEXT	PROBABLE CAUSE	CORRECTIVE ACTION
		Open Circuit	Relay coil is broken or open. Bad connection on relay. Wiring harness is cut.	Check / fix relay coil or connection Check / fix wiring harness
		Current Above normal	Relay coil or wiring harness shorted to 12v or 24v	Fix relay coil or wiring harness
16	SldO Mot Pos Rly	Shorted High	Relay coil or wiring harness shorted to 12v or 24v	Fix relay coil or wiring harness
		Shorted Low	Relay coil or wiring harness shorted to ground	Fix relay coil or wiring harness
		Open Circuit	Relay coil is broken or open. Bad connection on relay. Wiring harness is cut.	Check / fix relay coil or connection Check / fix wiring harness
		Current Above normal	Relay coil or wiring harness shorted to 12v or 24v	Fix relay coil or wiring harness
17	SldO Open Sw	Shorted High	Switch or wiring harness shorted to 12v or 24v	Fix switch or wiring harness
18	SldO Close Sw	Shorted High	Switch or wiring harness shorted to 12v or 24v	Fix switch or wiring harness
19	SldO Limit In Se	Shorted High	Sensor or wiring harness shorted to 12v or 24v	Fix sensor or wiring harness
20	SldO Limit Out Se	Shorted High	Sensor or wiring harness shorted to 12v or 24v	Fix sensor or wiring harness
21	SldO Secu Pin Sol	Shorted High	Solenoid or wiring harness shorted to 12v or 24v	Fix solenoid or wiring harness
		Shorted Low	Solenoid or wiring Harness shorted to ground	Fix solenoid or wiring harness
		Open Circuit	Solenoid is broken or open. Bad connection on solenoid or bloc valve. Wiring harness is cut.	Check / fix solenoid or connection. Check / fix wiring harness
		Current Above normal	Solenoid or wiring harness shorted to 12v or 24v	Fix solenoid or wiring harness
22	SldO Limit In Out	Mechanical Or Electrical Fault	In Limit and Out Limit are seen at the same time. In Limit or Out Limit problem.	Check / replace in limit or out limit sensors Fix wiring harness.
23	Limit Sensor 5 V supply	Shorted Low	5v IO-B output is less than 2v. Wiring harness is open or shorted to ground.	Check 5v output on IO-B / replace IO-B module. Fix wiring harness.