PREVOST

Prevost Vehicles – All Series

MAINTENANCE MANUAL

PA-1621

MAINTENANCE MANUAL

H3-41, H3-45, H3-45 VIP
X3-45, X3-45 VIP

PA1621

PA1621

First issue: January 2017

Featuring: GHG17 engine, X series new electrical architecture and electric cooling fans.

This manual is applicable to the following model year 2017 vehicles,

From: H-3735 (H Series); H-6180 (X Series CAN); H-7417 (X-Series US)

Including the following individual vehicles: H-3670, H-6175, H-7386, H-7395

REV	FROM V.I.N.	DESCRIPTION	ISSUED
00		Initial release	Jan 2017

CRITICAL EMISSION-RELATED MAINTENANCE

Source of parts and repair:

A repair shop or person of the owner's choosing must maintain, replace, or repair emission control devices and systems per manufacturer's recommendations.

Replacement of tires that are GHG certified:

The original equipment tires installed on this vehicle at the factory were certified to the U.S. EPA Greenhouse Gas (GHG) and **National Highway Traffic Safety Administration (NHTSA)** Fuel Efficiency regulations. Replacement of these tires should be with a tire of equal or lower rolling resistance levels (TRRL or Crr). Please consult your tire supplier(s) for appropriate replacement tires.

Maintaining a GHG certified tire:

In order to maintain the certified rolling resistance of the tires which optimize fuel economy, the maintenance procedures provide by the tire manufacturer must be followed.

CONTENTS

- SECTION 00: GENERAL INFORMATION
- MULTIPLEX MODULES DISCONNECTION PROCEDURE PRIOR TO WELDING
- SECTION 01: ENGINE
- MI16-16 STARTER REMOVAL AND INSTALLATION
- SECTION 03: FUEL SYSTEM
- SECTION 04: EXHAUST AND AFTERTREATMENT
- SECTION 05a: H3 SERIES COOLING SYSTEM
- SECTION 05b: X3 SERIES COOLING SYSTEM
- SECTION 06a: H3 SERIES ELECTRICAL
- SECTION 06b: X3 SERIES ELECTRICAL
- ELECTRICAL CONNECTORS PROTECTION
- MI15-24 POWER CABLES INSPECTION GUIDELINES
- MI16-17 TWIN BOSCH HD10 ALTERNATOR REMOVAL AND INSTALLATION
- SECTION 07: TRANSMISSION
- SECTION 09: PROPELLER SHAFT
- SECTION 10: FRONT I-BEAM AXLE
- SECTION 11: REAR AXLES
- SECTION 12: BRAKE AND AIR SYSTEM
- SECTION 13: WHEELS, HUBS AND TIRES
- SECTION 14: STEERING
- SECTION 16: SUSPENSION
- SECTION 18A: H3 SERIES BODY
- SECTION 18B: X3 SERIES BODY
- SECTION 18C: MI15-18 STRUCTURE INSPECTION FOR CORROSION
- SECTION 18D: MI15-41 CRACKING OF POLYCARBONATE TAILLIGHTS
- SECTION 22: HEATING AND AIR CONDITIONING
- SECTION 23A: H3 SERIES ACCESSORIES
- SECTION 23B: X3 SERIES ACCESSORIES
- SECTION 24: LUBRICATION & SERVICING
- SECTION 26a: H3 SERIES SLIDE-OUT
- SECTION 26b X3 SERIES SLIDE-OUT

CONTENTS

ILLUSTRATIONS **1**

1. FOREWORD **2**

2. SCHEMATICS **2**

3. PRECAUTIONS TO BE OBSERVED BEFORE WELDING **2**

4. SAFETY NOTICE **6**

4.1 DATA PLATES AND CERTIFICATIONS 6
4.1.1 Engine *6*
4.1.2 Transmission *6*
4.1.3 Drive Axle *7*
4.1.4 Front Axles *7*
4.1.5 Coach Final Record *7*
4.1.6 Safety Certification *7*
4.1.7 DOT Certification Label *7*
4.1.8 Fuel Tank Label *7*
4.1.9 EPA Engine Label *8*
4.1.10 Vehicle Identification Number (VIN) *8*

5. FASTENER **10**

5.1 FASTENER STRENGTH IDENTIFICATION 10
5.2 STANDARD TORQUE SPECIFICATIONS 11
5.2.1 SAE *11*
5.2.2 Metric *13*
5.3 SELF-LOCKING FASTENERS 15
5.4 RECOMMENDATIONS FOR REUSE 15
5.5 SIX LOBED SOCKET HEAD 16
5.6 HOSE CLAMP TORQUE 18

ILLUSTRATIONS

FIGURE 1: VOLVO D13 ENGINE DATA PLATE 6
FIGURE 2: ALLISON TRANSMISSION 6
FIGURE 3: I-SHIFT TRANSMISSION 7
FIGURE 4: DATA PLATE LOCATION WITH MODEL NO., SERIAL NO. AND RATIO 7
FIGURE 5: IFS TYPICAL SERIAL & MODEL NUMBERS 7
FIGURE 6: I-BEAM AXLE TYPICAL SERIAL & MODEL NUMBERS 7
FIGURE 8: DOT CERTIFICATION PLATE 7
FIGURE 9: EMISSION CONTROL LABEL 8
FIGURE 10: VEHICLE I.D. 8
FIGURE 11: VEHICLE IDENTIFICATION NUMBER 9
FIGURE 12: THREAD NOTATION 10
FIGURE 13: BOLT STRENGTH MARKINGS 10
FIGURE 14: SELF-LOCKING FASTENERS 15
FIGURE 15: METRIC - US STANDARD CONVERSION TABLE 16
FIGURE 16: CONVERSION CHART 17

1. FOREWORD

This manual includes procedures for diagnosis, service, maintenance and repair for components of all series of Prevost coaches and motorhomes listed on the front cover. This manual should be kept in a handy place for ready reference by the technician. If properly used, it will meet the needs of the technician and owner.

Information provided in Section 1 through 26 pertains to standard equipment items, systems and components as well as the most commonly used optional equipment and special equipment offered on the vehicle models covered by this manual. At the beginning of each section: a Table of Contents and a list of illustrations give the page number on which each subject begins and where each figure is located.

Vehicle operating information is provided in a separate Operator's Manual for coaches or Owner's Manual. Audio/Video system operator instructions are also included in a separate manual.

More specific information on engine, transmission and other systems or components operating, maintenance, and overhaul information is contained in the applicable service manual published by the OEM. Parts information may be contained in the applicable OEM parts catalog or service manual published by the OEM. All information, illustrations and specifications contained in this manual are based on the latest product information available at the time of publication approval. The right is reserved to make product changes at any time without notice.

NOTE
Illustrations in this manual are used for reference only and may differ slightly from the actual vehicle, however, key components addressed in the manual are represented as accurately as possible.

Prevost occasionally sends Maintenance Information, Warranty Bulletins, Safety Recalls or other literature to update users with the latest service procedures. They are issued, when required, to supplement or supersede information in this manual. Update sheet should be filled out and bulletins should be filed at the end of their respective section for future reference.

2. SCHEMATICS

Vehicle pneumatic and electrical schematics can be found in your technical publications box. Refer to those schematics for detailed circuit information and diagnosis.

3. PRECAUTIONS TO BE OBSERVED BEFORE WELDING

CAUTION
For vehicles equipped with a WCL system, disconnect electronic controller connector.

CAUTION
Cover electronic control components and wiring to protect from hot sparks, etc.

CAUTION
Position welding machine ground clamp as close as possible to the work. Ensure that the welding machine ground return clamp is well secured and makes a good electrical contact with a large metallic area of the chassis located as close as possible to the welding point.

CAUTION
Do not use TIG welding process on the vehicle. This high frequency current process can seriously damage the electronic components.

STEEL – STEEL WELDING

CAUTION

Before welding, perform multiplex modules disconnection procedure.

NOTE

Welding surfaces must be free of scale, slag, rust, paint, grease, humidity or other foreign material that would render welding impossible.

DANGER

Only a qualified and experienced person must do welding.

- FCAW (Flux Cored Arc Welding) process ;
- Electrode wire conforms to A5.20 AWS (American Welding Society) specifications ;
- E4801T-9-CH, type electrode wire with 0,045“ diameter (1,14 mm) ;

Material Thickness	Voltage	Current	Wire Feed Rate	Shielding Gas
1/8” to ½”	26 ± 2 volts	260 Amps	450 ipm approx.	75% argon – 25% CO2 or 100% CO2

If necessary and with great care to prevent perforating the material, it is possible to use a conventional electric arc welding machine according to the following specifications:

- SMAW (Shielded Metal-Arc Welding) process ;
- Welding rod conforms to A5.1 of AWS (American Welding Society) specifications; E 7018 type welding rod with 1/8” diameter (3,2 mm).
- Current: 100 amperes to 150 amperes; optimum at 120 amps.

It is important to grind weld bead starts and stops and also to grind arc strikes from surfaces.

STEEL - STAINLESS STEEL OR STAINLESS STEEL - STAINLESS STEEL WELDING

CAUTION

Before welding, perform multiplex modules disconnection procedure.

NOTE

Welding surfaces must be free of scale, slag, rust, paint, grease, humidity or other foreign material that would render welding impossible.

DANGER

Only a qualified and experienced person must do welding.

- GMAW (Gas Metal-Arc Welding) process;
- Welding wire conforms to AWS (American Welding Standards) A5.9 specifications;
- 308LSi type welding wire with 0.035" diameter (0,9 mm);

STEEL - STAINLESS STEEL WELDING

Steel Thickness	SS Thickness	Voltage	Current	Wire Feed Rate	Shielding Gas
Less than 1/8”	Any type	20±1.5 volts	130±15 Amps	290 ipm approx.	90% He, 7.5% Ar, 2.5% CO2
1/8” and more	Any type	22±1.5 volts	160±15 Amps	330 ipm approx.	90% He, 7.5% Ar, 2.5% CO2

STAINLESS STEEL - STAINLESS STEEL WELDING

SS Thickness	Voltage	Current	Wire Feed Rate	Shielding Gas
Any type	20 ± 1.5 volts	130 ± 15 Amps	290 ipm approx.	90% He – 7.5% Ar, 2.5% CO2

If necessary and with great care to prevent perforating the material, it is possible to use a conventional electric arc welding machine according to the following specifications:

- SMAW (Shield Metal-Arc Welding) process;
- Welding rod conforms to AWS (American Welding Standards) A5.4 specifications; 308L-17 type welding rod with 3/32" diameter (2,4 mm);
- Current: - 50 amperes to 90 amperes, optimum at 60 amperes.

It is important to grind weld bead starts and stops and also to grind arc strikes from surfaces.

4. SAFETY NOTICE

This maintenance manual has been prepared in order to assist skilled mechanics in the efficient repair and maintenance of PREVOST vehicles.

This manual covers only the procedures as of manufacturing date.

Safety features may be impaired if other than genuine PREVOST parts are installed.

Torque wrench tightening specifications must be strictly observed. Locking devices must be installed or replaced by new ones, where specified. If the efficiency of a locking device is impaired, it must be replaced.

This manual emphasizes particular information outlined by the wording and symbols:

DANGER

Directs the operator's attention to unsafe practices which could result in serious personal injury or death.

WARNING

Directs the operator's attention to unsafe practices which could result in serious personal injury or severe damage to the vehicle.

CAUTION

Directs the operator's attention to unsafe practices where personal injury is not likely but damage to vehicle components could occur.

NOTE

Indicates supplementary information essential to the proper operation of the vehicle. Although, the mere reading of such information does not eliminate the hazard, understanding of the information will promote its correct use.

4.1 DATA PLATES AND CERTIFICATIONS

Delay and confusion can be avoided by placing the complete vehicle identification number of the vehicle and the serial numbers of the engine on parts orders and correspondence. Also, the transmission, axles, power steering pump chassis and other major components are identified by serial numbers.

4.1.1 Engine

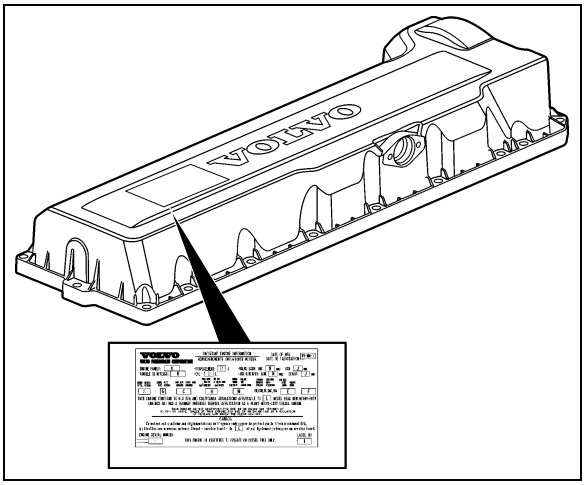

FIGURE 1: VOLVO D13 ENGINE DATA PLATE 00052

Volvo D13 engine serial and model numbers are stamped on the cylinder head. Also, the engine data plate certifies that the engine conforms to federal and any state exhaust emission regulations. It gives the operating conditions under which certification was made (Figure 1).

4.1.2 Transmission

The transmission identification plate is located on the oil level dipstick side of the transmission (WT) or on transmission (I-Shift) (Figure 2 & Figure 3). The identification plate shows the transmission serial number, part number (assembly number), and model number. Use all three numbers when ordering parts.

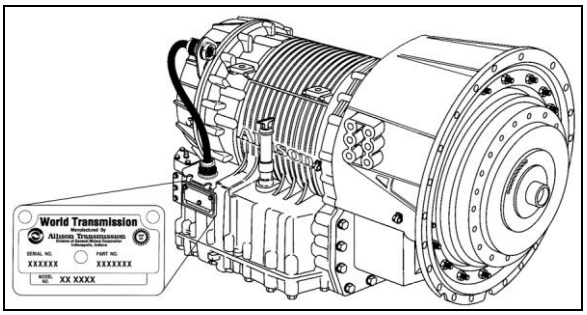

FIGURE 2: ALLISON TRANSMISSION 07076

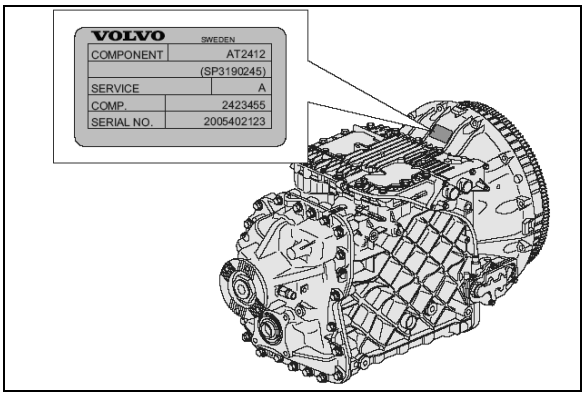

FIGURE 3: I-SHIFT TRANSMISSION

4.1.3 Drive Axle

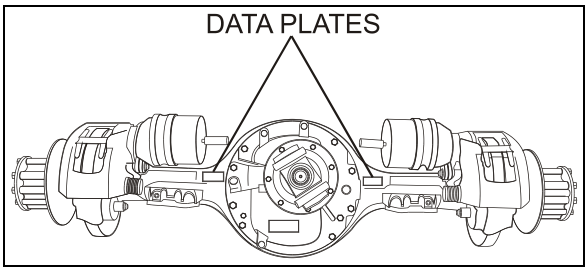

FIGURE 4: DATA PLATE LOCATION WITH MODEL NO., SERIAL NO. AND RATIO 00007

4.1.4 Front Axles

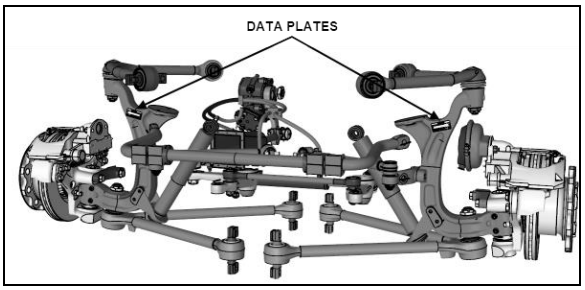

FIGURE 5: IFS TYPICAL SERIAL & MODEL NUMBERS
16136

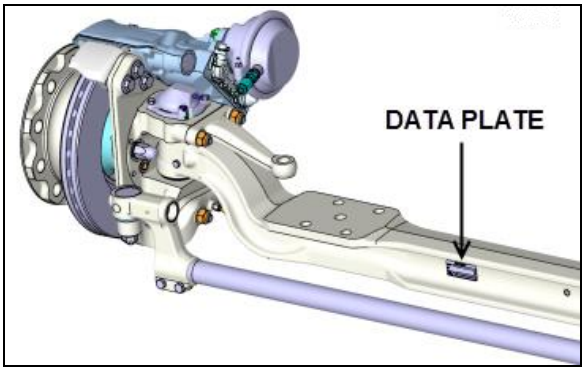

FIGURE 6: I-BEAM AXLE TYPICAL SERIAL & MODEL NUMBERS 00008

4.1.5 Coach Final Record

The Coach Final Record is a record of all data pertaining to the assembly of the vehicle. This record is shipped to the new customer via a courier company. Retain this record in the company records office for reference and safe-keeping.

4.1.6 Safety Certification

Vehicle components meet specifications and standards as follows:

- Material and parts conform to ASTM and/or SAE standards in effect at the time of manufacture.

- All factory-installed interior materials meet FMVSS 302 for fire resistance.

- Certified according to Provincial, State and Federal Safety standards (Canadian and US) BMCSS, FMVSS, and CMVSS.

Other applicable certification labels are affixed to the component.

4.1.7 DOT Certification Label

This certifies that vehicles manufactured by Prevost Car Inc., comply with all Federal Motor Vehicle Safety Standards at the time of manufacture. Information such as date of manufacture, model year, gross vehicle weight rating, tire types and inflation pressure is also etched on this plate. The DOT Certification plate is affixed behind the driver's seat.

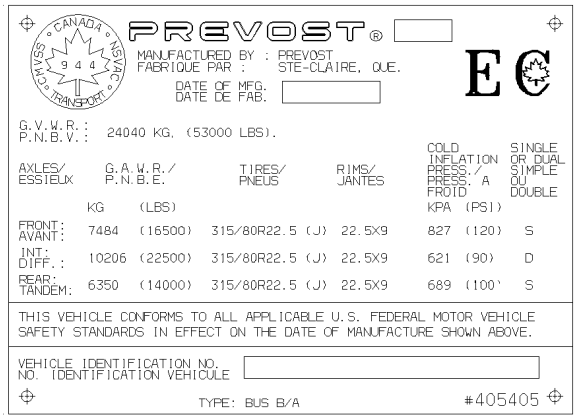

FIGURE 7: DOT CERTIFICATION PLATE 00016

4.1.8 Fuel Tank Label

The fuel tank label is molded on the side of the fuel tank. To read this label, unscrew the fuel tank access panel nuts located at the left in the condenser compartment.

4.1.9 EPA Engine Label

The exhaust emission certification label affixed in the engine compartment certifies that the engine conforms to federal and any state exhaust emission regulations (Figure 8). It gives the operating conditions under which certification was made.

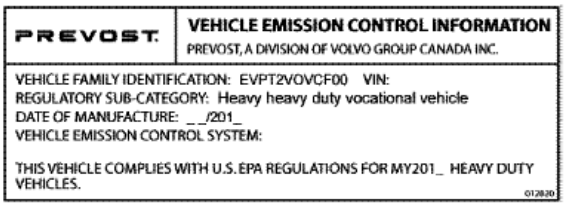
PREVOST

VEHICLE EMISSION CONTROL INFORMATION

PREVOST, A DIVISION OF VOLVO GROUP CANADA INC.

VEHICLE FAMILY IDENTIFICATION: EVPT2VOVCF00 VIN:
REGULATORY SUB-CATEGORY: Heavy heavy duty vocational vehicle
DATE OF MANUFACTURE: _ _/201_
VEHICLE EMISSION CONTROL SYSTEM:

THIS VEHICLE COMPLIES WITH U.S. EPA REGULATIONS FOR MY201_ HEAVY DUTY VEHICLES.

FIGURE 8: EMISSION CONTROL LABEL 23229

4.1.10 Vehicle Identification Number (VIN)

The seventeen digit vehicle identification number (VIN) is located on a plate (Figure 9) located on the windshield frame pillar (driver's side). The VIN is visible from the outside of the vehicle. Make sure the correct vehicle identification number is given when ordering replacement parts. Using the VIN when ordering parts will facilitate processing.

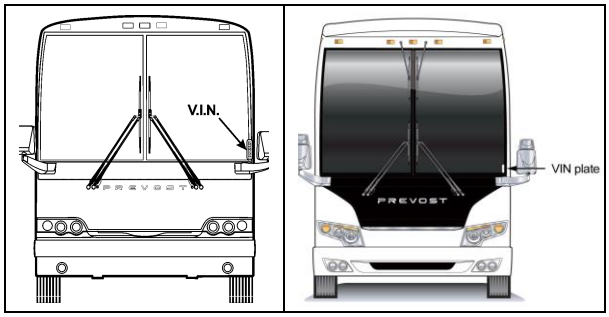

FIGURE 9: VEHICLE I.D. 00048

NOTE
Record the VIN in the vehicle documentation and keep with company records. The VIN will normally be used for vehicle registration and for obtaining vehicle insurance coverage.

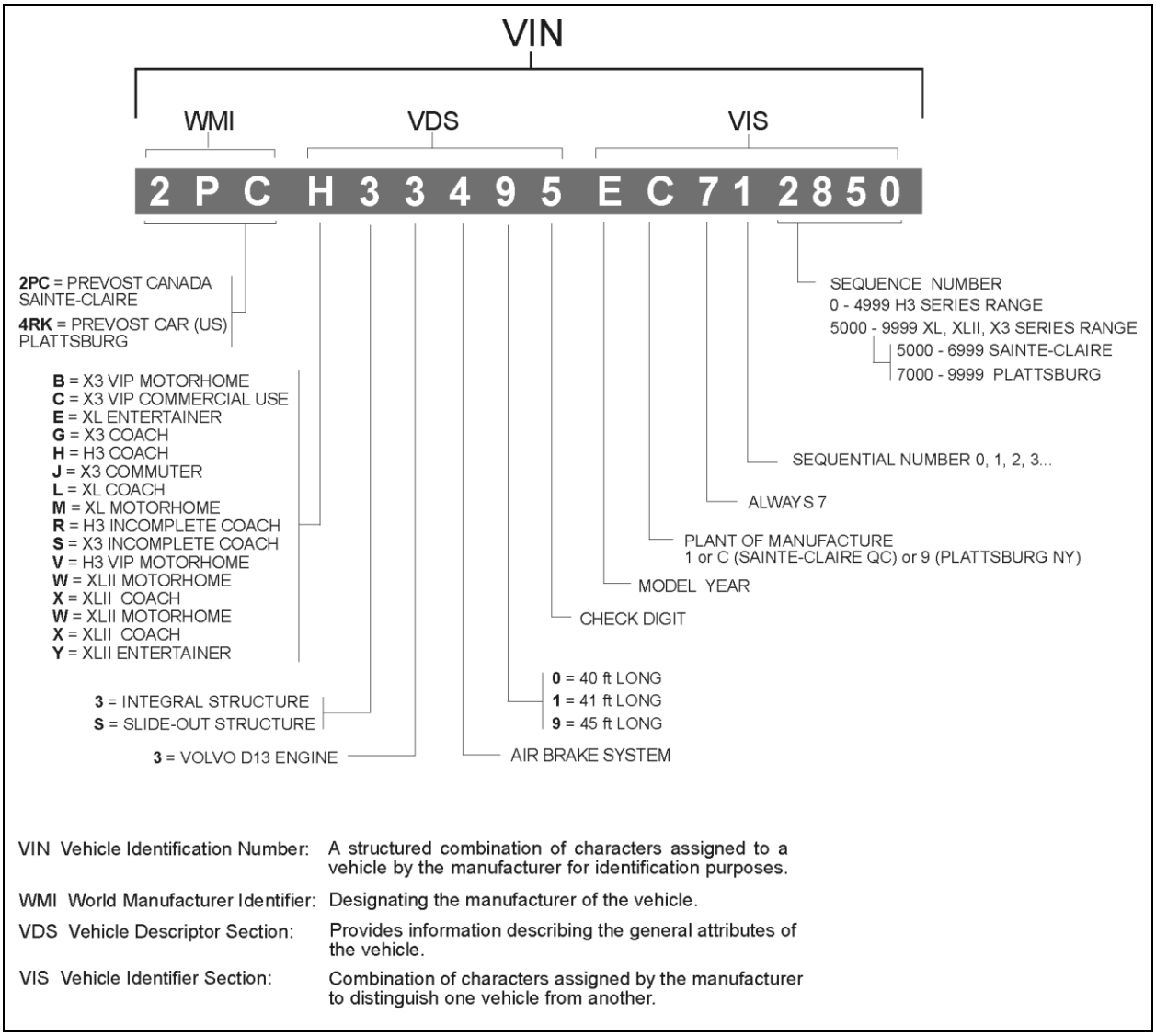

FIGURE 10: VEHICLE IDENTIFICATION NUMBER 00057_5

YEAR	CODE	YEAR	CODE	YEAR	CODE
1997	V	2005	5	2013	D
1998	W	2006	6	2014	E
1999	X	2007	7	2015	F
2000	Y	2008	8	2016	G
2001	1	2009	9	2017	H
2002	2	2010	A	2018	J
2003	3	2011	B	2019	K
2004	4	2012	C	2020	L

5. FASTENER

5.1 FASTENER STRENGTH IDENTIFICATION

Most commonly used metric fastener strength property classes are 9.8 and 10.9 with the class identification embossed on the head of each bolt. Customary (inch) strength classes range from grade 2 to 8 with radial line identification embossed on each bolt head actual grade (i.e., a grade 7 bolt will have 5 embossed radial lines on the bolt head). Some metric nuts will be marked with single digit strength identification numbers on the nut face. Figure 12 shows the different strength markings. When replacing metric fasteners, be careful to use fasteners of the same or greater strength than the original fasteners (the same number marking or higher). It is also important to select replacement fasteners of the correct size. Correct replacement fasteners are available through the parts division. Some metric fasteners available in after-market parts sources were designed to metric standards of countries other than the United States and may be of a lower strength, may not have the numbered head marking system, and may be of a different thread pitch.

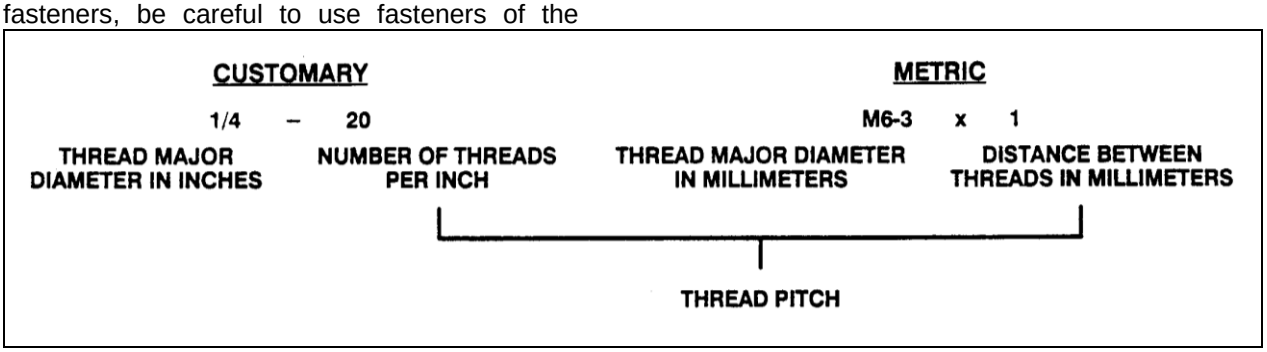

FIGURE 11: THREAD NOTATION 00002

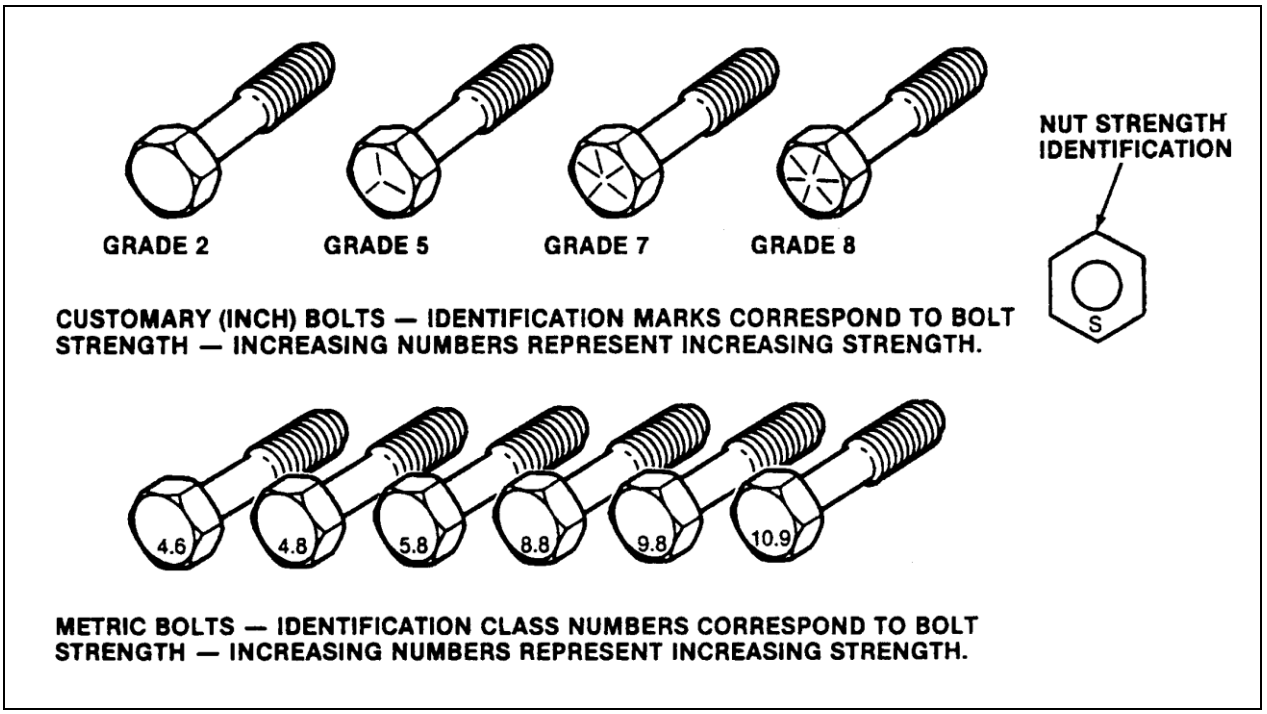

FIGURE 12: BOLT STRENGTH MARKINGS 00003

The metric fasteners used on the coach are designed to new standards and may not yet be manufactured by some non-domestic fastener suppliers. In general, except for special applications, the common sizes and pitches are:

M 8 X 1.25;
M 10 X 1.5;
M 12 X 1.75;
M 14 X 2;

5.2 STANDARD TORQUE SPECIFICATIONS

The following table lists the standard tightening torques for bolts and nuts, relating tightening torque to thread diameter. Use the following table as a general guide for tightening torques. Use this table only for the bolts and nuts which do not require a specific torque value. All of the values are for use with dry solvent-cleaned threads.

5.2.1 SAE

TYPE	DESCRIPTION	THREAD	GRADE	RECOMMENDED TORQUE Tolerance: ±10%
SAE	1/4-20	unc	5	96 lb-in (11 Nm)
SAE	1/4-20	unc	8	135 lb-in (15 Nm)
SAE	1/4-28	unf	5	106 lb-in (12 Nm)
SAE	1/4-28	unf	8	149 lb-in (17 Nm)
SAE	5/16-18	unc	5	188 lb-in (21 Nm)
SAE	5/16-18	unc	8	266 lb-in (30 Nm)
SAE	5/16-24	unf	2	131 lb-in (15 Nm)
SAE	5/16-24	unf	5	202 lb-in (23 Nm)
SAE	5/16-24	unf	8	286 lb-in (32 Nm)
SAE	3/8-16	unc	5	27 lb-ft (37 Nm)
SAE	3/8-16	unc	8	38 lb-ft (52 Nm)
SAE	3/8-24	unf	5	30 lb-ft (41 Nm)
SAE	3/8-24	unf	8	42 lb-ft (57 Nm)
SAE	7/16-14	unc	5	43 lb-ft (58 Nm)
SAE	7/16-14	unc	8	60 lb-ft (81 Nm)
SAE	7/16-20	unf	5	46 lb-ft (62 Nm)
SAE	7/16-20	unf	8	65 lb-ft (88 Nm)
SAE	1/2-13	unc	5	65 lb-ft (88 Nm)
SAE	1/2-13	unc	8	92 lb-ft (125 Nm)
SAE	1/2-20	unf	5	71 lb-ft (96 Nm)
SAE	1/2-20	unf	8	100 lb-ft (136 Nm)
SAE	9/16-12	unc	5	94 lb-ft (127 Nm)
SAE	9/16-12	unc	8	132 lb-ft (179 Nm)
SAE	9/16-18	unf	5	101 lb-ft (137 Nm)
SAE	9/16-18	unf	8	143 lb-ft (194 Nm)
SAE	5/8-11	unc	5	130 lb-ft (176 Nm)
SAE	5/8-11	unc	8	184 lb-ft (249 Nm)
SAE	5/8-18	unf	5	142 lb-ft (193 Nm)

TYPE	DESCRIPTION	THREAD	GRADE	RECOMMENDED TORQUE Tolerance: ±10%
SAE	5/8-18	unf	8	200 lb-ft (271 Nm)
SAE	3/4-10	unc	5	228 lb-ft (309 Nm)
SAE	3/4-10	unc	8	321 lb-ft (435 Nm)
SAE	3/4-16	unf	5	245 lb-ft (332 Nm)
SAE	3/4-16	unf	8	346 lb-ft (469 Nm)
SAE	7/8-9	unc	5	368 lb-ft (499 Nm)
SAE	7/8-9	unc	8	519 lb-ft (704 Nm)
SAE	7/8-14	unf	5	392 lb-ft (531 Nm)
SAE	7/8-14	unf	8	554 lb-ft (751 Nm)

SAE	A2-70 (NSS-SS)
DESCRIPTION COARSE THREAD	RECOMMENDED TIGHTENING (LB-FT) Tolerance: ±10%
	DRY
8-32	21
10-32	34
1/4-20	77
5/16-18	152
DESCRIPTION COARSE THREAD	RECOMMENDED TIGHTENING (LB-FT) Tolerance: ±10%
	DRY
3/8-16	22
7/16-14	34
1/2-13	53

5.2.2 Metric

TYPE	DESCRIPTION	THREAD	GRADE	RECOMMENDED TORQUE, ±10% lb-ft (dry) otherwise specified Tolerance: ±10%
METRIC	M6 X 1		nut 8 / screw 8.8	7 lb-ft (10 Nm)
METRIC	M6 X 1		nut 10 / screw 10.9	10 lb-ft (13 Nm)
METRIC	M6 X 1		nut 12 / screw 12.9	12 lb-ft (16 Nm)
METRIC	M8 X 1.25		nut 8 / screw 8.8	17 lb-ft (23 Nm)
METRIC	M8 X 1.25		nut 10 / screw 10.9	24 lb-ft (32 Nm)
METRIC	M8 X 1.25		nut 12 / screw 12.9	28 lb-ft (38 Nm)
METRIC	M10 X 1.5		nut 8 / screw 8.8	35 lb-ft (47 Nm)
METRIC	M10 X 1.5		nut 10 / screw 10.9	48 lb-ft (65 Nm)
METRIC	M10 X 1.5		nut 12 / screw 12.9	56 lb-ft (76 Nm)
METRIC	M12 X 1.75		nut 8 / screw 8.8	59 lb-ft (80 Nm)
METRIC	M12 X 1.75		nut 10 / screw 10.9	82 lb-ft (111 Nm)
METRIC	M12 X 1.75		nut 12 / screw 12.9	96 lb-ft (130 Nm)
METRIC	M14 X 2		nut 8 / screw 8.8	94 lb-ft (128 Nm)
METRIC	M14 X 2		nut 10 / screw 10.9	130 lb-ft (176 Nm)
METRIC	M14 X 2		nut 12 / screw 12.9	152 lb-ft (206 Nm)
METRIC	M16 X 2		nut 8 / screw 8.8	143 lb-ft (194 Nm)
METRIC	M16 X 2		nut 10 / screw 10.9	198 lb-ft (268 Nm)
METRIC	M16 X 2		nut 12 / screw 12.9	231 lb-ft (314 Nm)
METRIC	M16 X 1.5		nut 10 / screw 10.9	206 lb-ft (279 Nm)
METRIC	M16 X 1.5		nut 12 / screw 12.9	241 lb-ft (326 Nm)
METRIC	M20 X 2.5		nut 8 / screw 8.8	280 lb-ft (379 Nm)
METRIC	M20 X 2.5		nut 10 / screw 10.9	387 lb-ft (524 Nm)
METRIC	M20 X 2.5		nut 12 / screw 12.9	452 lb-ft (613 Nm)
METRIC	M20 X 1.5		nut 10 / screw 10.9	415 lb-ft (563 Nm)
METRIC	M20 X 1.5		nut 12 / screw 12.9	485 lb-ft (658 Nm)
METRIC	M22 X 2.5		nut 8 / screw 8.8	373 lb-ft (506 Nm)
METRIC	M22 X 2.5		nut 10 / screw 10.9	516 lb-ft (700 Nm)
METRIC	M22 X 2.5		nut 12 / screw 12.9	604 lb-ft (818 Nm)
METRIC	M24 X 3		nut 8 / screw 8.8	481 lb-ft (652 Nm)
METRIC	M24 X 3		nut 10 / screw 10.9	665 lb-ft (902 Nm)

TYPE	DESCRIPTION	THREAD	GRADE	RECOMMENDED TORQUE, ±10% lb-ft (dry) otherwise specified Tolerance: ±10%
METRIC	M24 X 3		nut 12 / screw 12.9	777 lb-ft (1054 Nm)

METRIC: STAINLESS NUT A2-70 AND STAINLESS SCREW A2-70 (NSS-SS)		
DESCRIPTION	RECOMMENDED TIGHTENING Tolerance: ±10% (N-M) DRY	RECOMMENDED TIGHTENING Tolerance: ±10% (LB-IN) DRY
M4 X 0.7	2.3	20
M5 X 0.8	4.4	39
M6 X 1	7.7	68
DESCRIPTION	RECOMMENDED TIGHTENING Tolerance: ±10% (N-M) DRY	RECOMMENDED TIGHTENING Tolerance: ±10% (LB-FT) DRY
M8 X 1.25	18.6	13.7
M10 X 1.5	37.3	27.5
M12 X 1.75	63.8	47.0

5.3 SELF-LOCKING FASTENERS

A self-locking fastener is designed with an interference fit between the nut and bolt threads. This is most often accomplished by distortion of the top thread of an all-metal nut or bolt or by using a nylon patch on the threads. A nylon insert or the use of adhesives may also be used as a method of interference between nut and bolt threads (Figure 13).

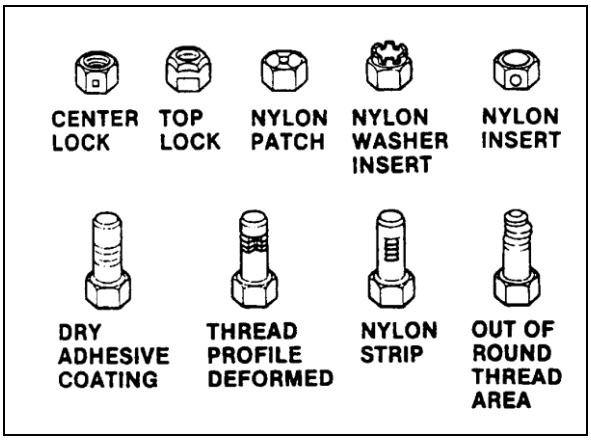

FIGURE 13: SELF-LOCKING FASTENERS 00004

5.4 RECOMMENDATIONS FOR REUSE

Clean, rust-free self-locking fasteners may be reused as follows:

a) Clean dirt and other foreign matter from the fastener;

b) Inspect the fastener to ensure there is no crack, elongation, or other sign of fatigue or over tightening. If there is any doubt, replace with a new self-locking fastener of equal or greater strength;

c) Assemble parts and hand start fastener;

d) Observe that, before the fastener seats, it develops torque per the chart in table two. If there is any doubt, replace with a new self-locking fastener of equal or greater strength;

e) Tighten the fastener to the torque specified in the applicable section of this manual;

Fasteners which are rusty or damaged should be replaced with new ones of equal or greater strength

.

SELF-LOCKING FASTENER TORQUE CHART

METRIC		6 & 6.3	8	10	12	14	16	20
NUTS AND ALL-METAL BOLTS	Nm	0.4	0.8	1.4	2.2	3.0	4.2	7.0
	lb-in	4.0	7.0	12	18	25	35	57
ADHESIVE OR NYLON COATED BOLTS	Nm	0.4	0.6	1.2	1.6	2.4	3.4	5.6
	lb-in	4.0	5.0	10	14	20	28	46

US STANDARD		¼	5/16	3/8	7/16	½	9/16	5/8	¾
NUTS AND ALL-METAL BOLTS	Nm	0.4	0.6	1.4	1.8	2.4	3.2	4.2	6.2
	lb-in	4.0	5.0	12	15	20	27	35	51
ADHESIVE OR NYLON COATED BOLTS	Nm	0.4	0.6	1.0	1.4	1.8	2.6	3.4	5.2
	lb-in	4.0	5.0	9.0	12	15	22	28	43

5.5 SIX LOBED SOCKET HEAD

Six lobed socket head (Torx) fasteners are used in some applications on vehicles covered in this manual. The tools designed for these fasteners are available commercially. However, in some cases, if the correct tool is not available, a hex socket head wrench may be used.

Multiply	by	to get equivalent number of:
LENGTH		
Inch	25.4	millimeters (mm)
Foot	0.305	meters (m)
Yard	0.914	meters
Mile	1.609	kilometers (km)
AREA		
Inch²	645.2	millimeters² (mm²)
	6.45	centimeters² (cm²)
Foot²	0.093	meters² (m²)
Yard²	0.836	meters²
VOLUME		
Inch³	16 387.0	mm³
	16.387	cm³
Quart	0.016	liters (l)
Gallon	0.946	liters
Yard³	3.785	liters
	0.765	meters³ (m³)
MASS		
Pound	0.453	kilograms (kg)
Ton	907.18	kilograms (kg)
Ton	0.907	ton (t)
FORCE		
Kilogram	9.807	newtons (N)
Ounce	0.278	newtons
Pound	4.448	newtons
TEMPERATURE		
Degree Fahrenheit	(†°F – 32) ÷ 1.8	Degree Celsius (C)

Multiply	by	to get equivalent number of:
ACCELERATION		
Foot/sec²	0.305	meter/sec² (m/s²)
Inch/sec²	0.026	meter/sec²
TORQUE		
Pound-inch	0.113	newton-meters (N·m)
Pound-foot	1.35	newton-meters
POWER		
Horsepower	0.746	kilowatts (kW)
PRESSURE OR STRESS		
Inches of water	0.249	kilopascals (kPa)
Pounds/sq. in.	6.895	kilopascals
ENERGY OR WORK		
BTU	1 055.0	joules (J)
Foot-pound	1.356	joules
kilowatt-hour	3 600 000.0 or 3.6 x 10⁶	joules (J = one W's)
LIGHT		
Foot candle	1.076	lumens/meter² (lm/m²)
VELOCITY		
Miles/hour	1.609	kilometers/hr (km/h)

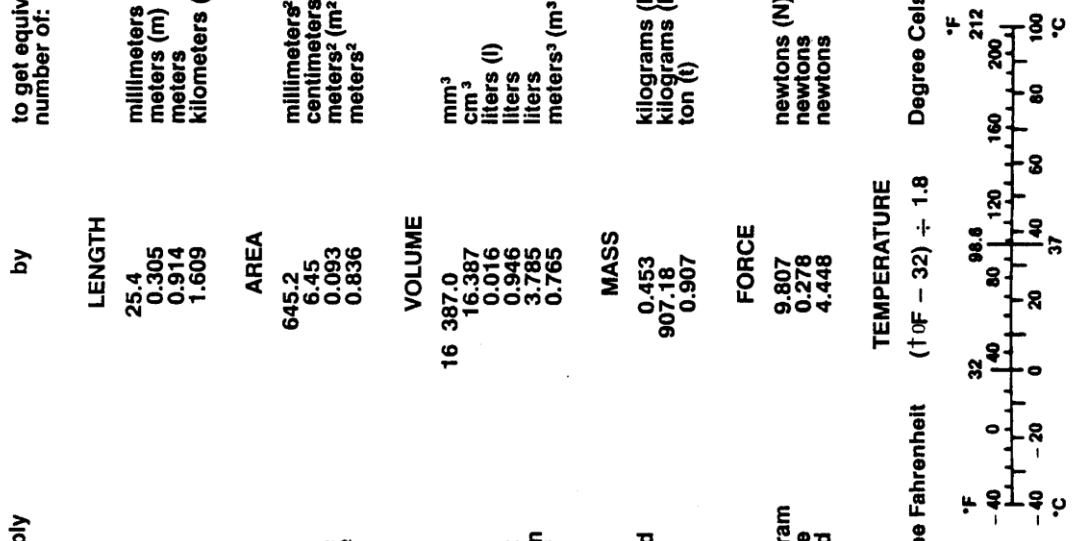

FIGURE 14: METRIC - US STANDARD CONVERSION TABLE 00005

DECIMAL AND METRIC EQUIVALENTS

FRACTIONS	DECIMAL IN.	METRIC MM	FRACTIONS	DECIMAL IN.	METRIC MM
1/64	.015625	.39688	33/64	.515625	13.09687
1/32	.03125	.79375	17/32	.53125	13.49375
3/64	.046875	1.19062	35/64	.546875	13.89062
1/16	.0625	1.58750	9/16	.5625	14.28750
5/64	.078125	1.98437	37/64	.578125	14.68437
3/32	.09375	2.38125	19/32	.59375	15.08125
7/64	.109375	2.77812	39/64	.609375	15.47812
1/8	.125	3.1750	5/8	.625	15.87500
9/64	.140625	3.57187	41/64	.640625	16.27187
5/32	.15625	3.96875	21/32	.65625	16.66875
11/64	.171875	4.36562	43/64	.671875	17.06562
3/16	.1875	4.76250	11/16	.6875	17.46250
13/64	.203125	5.15937	45/64	.703125	17.85937
7/32	.21875	5.55625	23/32	.71875	18.25625
15/64	.234375	5.95312	47/64	.734375	18.65312
1/4	.250	6.35000	3/4	.750	19.05000
17/64	.265625	6.74687	49/64	.765625	19.44687
9/32	.28125	7.14375	25/32	.78125	19.84375
19/64	.296875	7.54062	51/64	.796875	20.24062
5/16	.3125	7.93750	13/16	.8125	20.63750
21/64	.328125	8.33437	53/64	.828125	21.03437
11/32	.34375	8.73125	27/32	.84375	21.43125
23/64	.359375	9.12812	55/64	.859375	21.82812
3/8	.375	9.52500	7/8	.875	22.22500
25/64	.390625	9.92187	57/64	.890625	22.62187
13/32	.40625	10.31875	29/32	.90625	23.01875
27/64	421875	10.71562	59/64	.921875	23.41562
7/16	.4375	11.11250	15/16	.9375	23.81250
29/64	.453125	11.50937	61/64	.953125	24.20937
15/32	.46875	11.90625	31/32	.96875	24.60625
31/64	.484375	12.30312	63/64	.984375	25.00312
1/2	.500	12.70000	1	1.00	25.40000

FIGURE 15: CONVERSION CHART 00006

5.6 HOSE CLAMP TORQUE

ENGLISH:	HOSE CLAMP	
DESCRIPTION CONSTANT TORQUE	RECOMMENDED TIGHTENING (LB-IN)	
		DRY
3/8 Hex		90-110

ENGLISH:	HOSE CLAMP (WAVE SEAL AND BREEZE)	
DESCRIPTION CONSTANT TORQUE	RECOMMENDED TIGHTENING (LB-IN)	
		DRY
5/16 Hex		55-65

METRIC:	HOSE CLAMP (CAILLAU)	
	RECOMMENDED TIGHTENING (LB-IN)	
		DRY
7 mm Hex		30±2.2

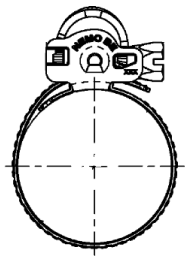

PREVOST

MULTIPLEX MODULES DISCONNECTION PROCEDURE PRIOR TO WELDING

Material: N/A

Equipment(s):
Phillips-head screwdriver
Ratchet handle
3/8" socket
Electric tape
Long nose pliers

Reference schematics: N/A

Safety rules:
- Wear safety goggles
- Set the battery master switch to the OFF position first

Recommendations: **This procedure should be performed by qualified personnel only.**

Disconnection prior to welding			
10	Switch ignition OFF Switch Master cut-out OFF	11	Open the 2 circuit breakers (each end)
		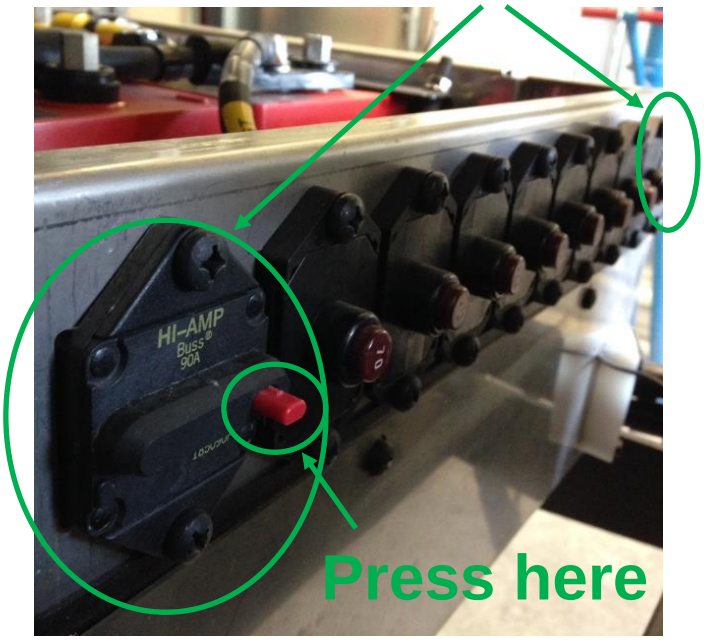	
12	Disconnect both electronic grounds Use insulating tape to make sure that cables don't touch each other or the vehicle body	13	Disconnect C397 and C355

Disconnection prior to welding			
14	Disconnect all the connectors from the I/O-A and I/O-B modules in rear junction box	15	Disconnect the control connector from the battery equalizer
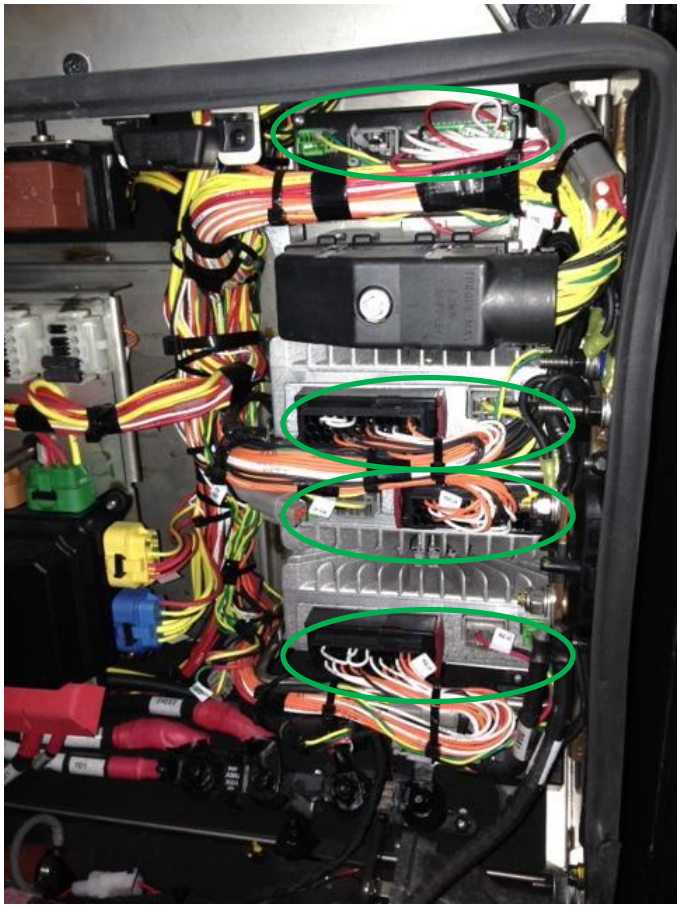		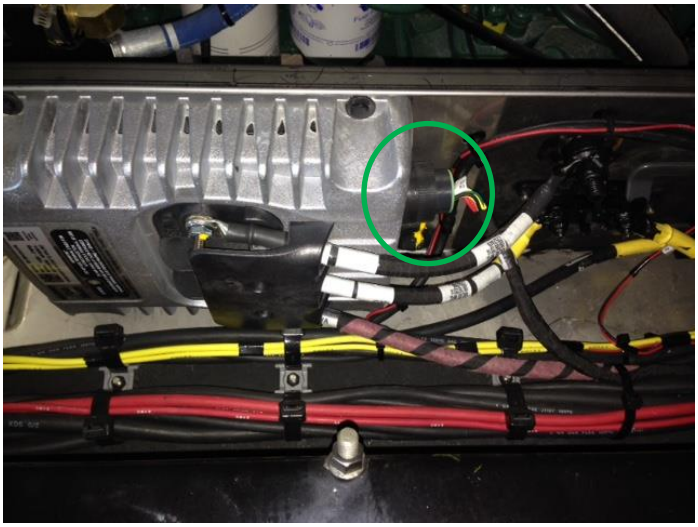	
16	In the front junction box Disconnect all the connectors from : - I/O-A modules - I/O-B modules - Vancso Gateway - ABS module - VECU - MCM	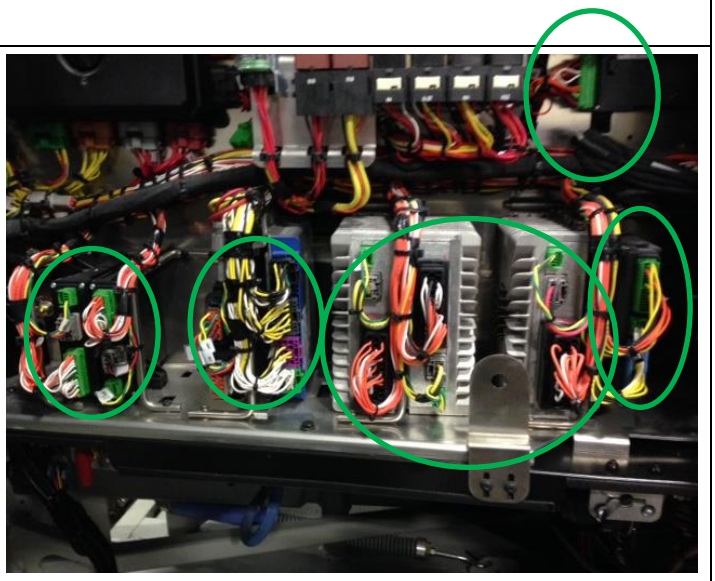	

Disconnection prior to welding			
17	Behind the right console panel Disconnect all the connectors from the I/O-B modules	18	In the condensor compartment Disconnect the ACM connector (A137A)
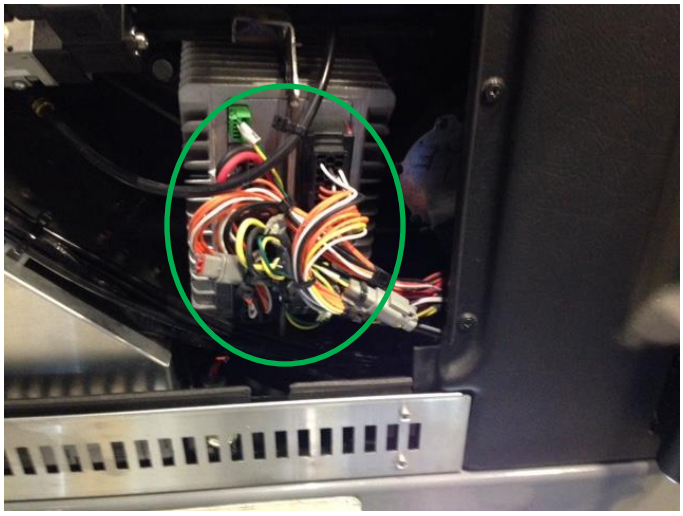		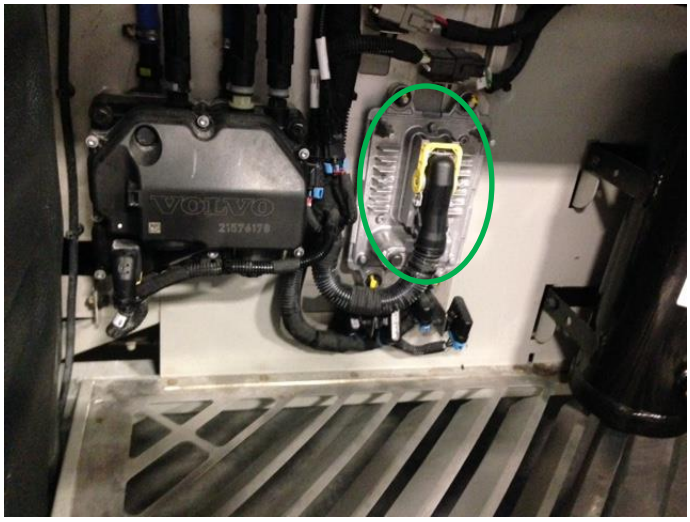	
19	In the evaporator compartment Disconnect all the connectors from I/O-B module	20	The vehicle is now ready for welding
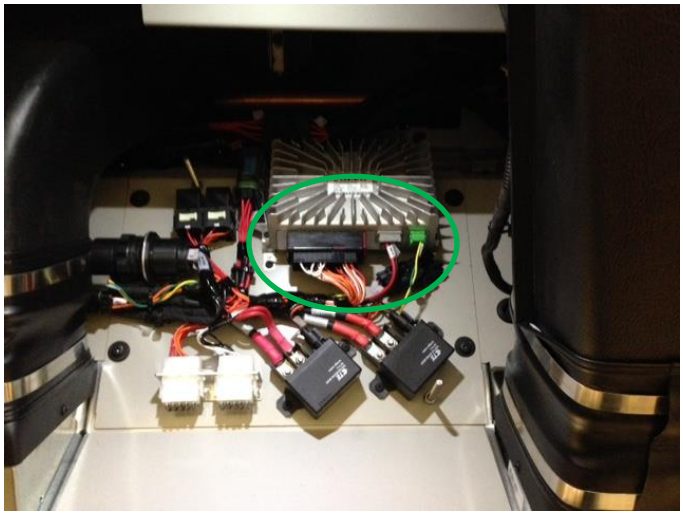		Make sure that the welding ground is as close as possible of the welding point and the contact is perfect.	
21	When the welding is done Reconnect all the modules	Make sure that all the connectors are perfectly connected with the locking tabs well engaged.	

Disconnection prior to welding			
10	Switch ignition OFF Switch Master cut-out OFF	11	Open the 3 circuit breakers
12	Disconnect both electronic grounds Use insulating tape to make sure that cables don't touch each other or the vehicle body	13	Disconnect C397
		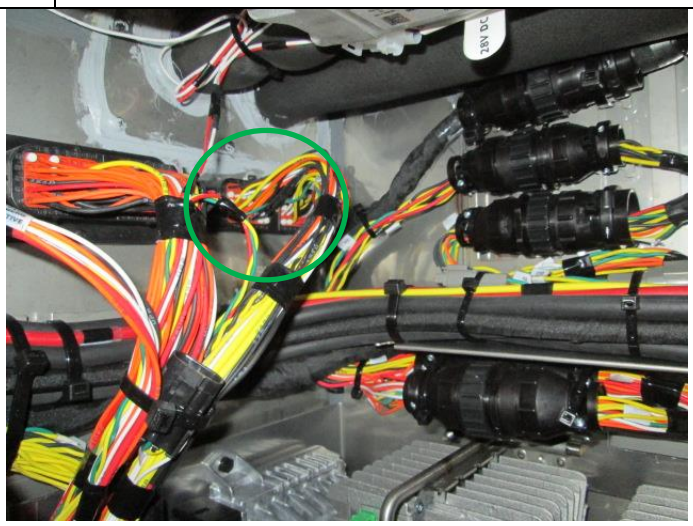	

Disconnection prior to welding			
14	Disconnect all the connectors from the I/O-A et I/O-B modules in rear junction box	15	Disconnect the control connector from the battery equalizer (Optional)
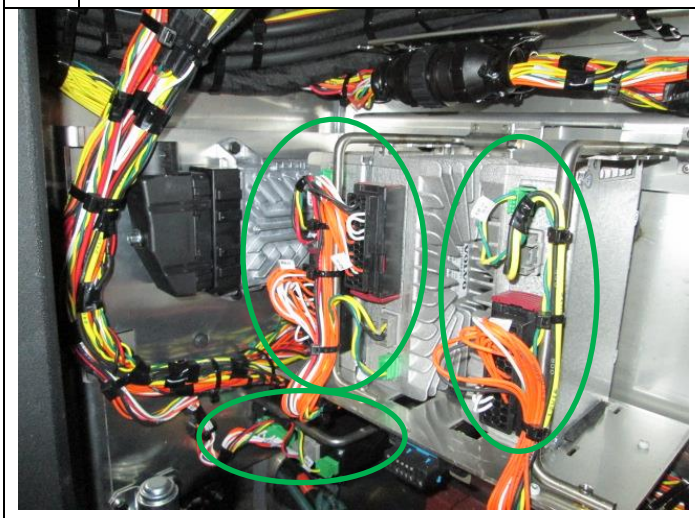		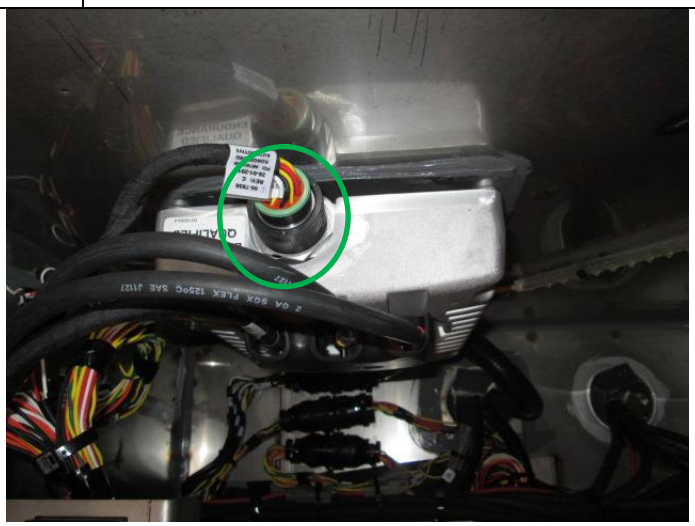	
16	In the engine compartment Disconnect C355		
17	In the front junction box Disconnect all the connectors from : - I/O-A modules - I/O-B modules - Vancso Gateway (Optional) - ABS module - VECU - MCM - Volvo link - TPMS - GSECU (IShift) (Optional)	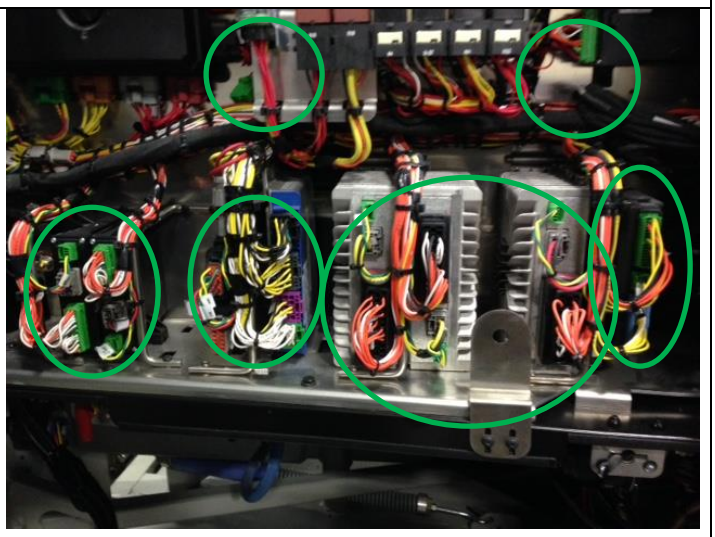	

Disconnection prior to welding			
18	Behind the right console panel Disconnect all the connectors from the I/O-B modules	19	In the condensor compartment Disconnect the ACM connector (A137A)
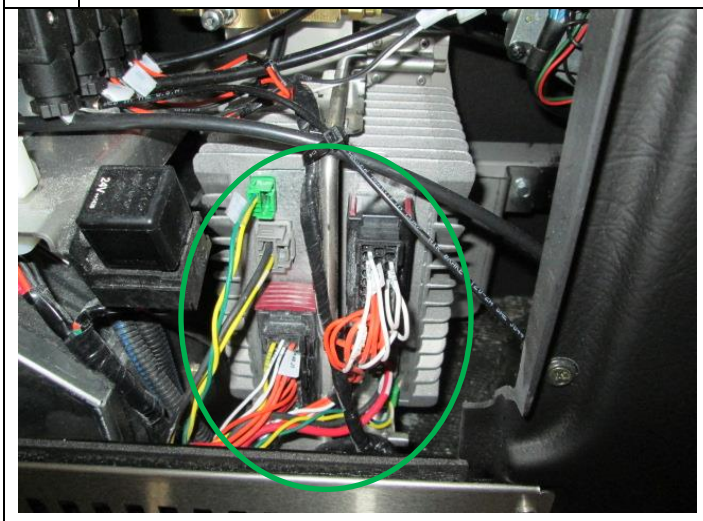			
20	In the evaporator compartment Disconnect all the connectors from I/O-B module	21	The vehicle is now ready for welding
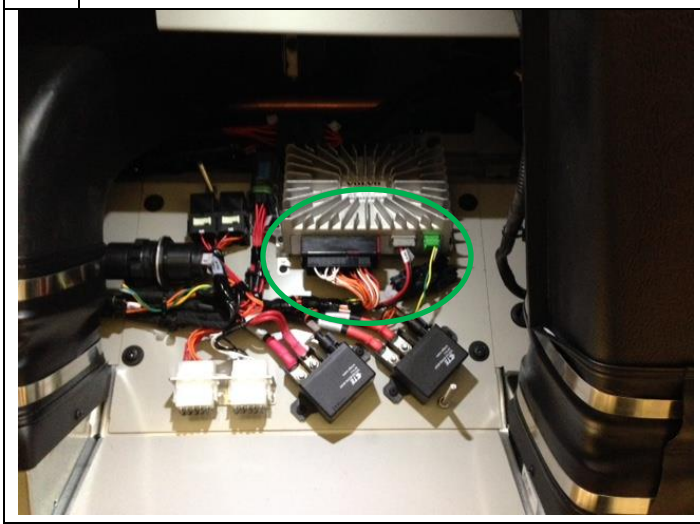		Make sure that the welding ground is as close as possible of the welding point and the contact is perfect.	
22	When the welding is done Reconnect all the modules	Make sure that all the connectors are perfectly connected with the locking tabs well engaged.	

CAUTION

For vehicles equipped with a WCL system, disconnect electronic controller connector.

CAUTION

Cover electronic control components and wiring to protect from hot sparks, etc.

CAUTION

Position welding machine ground clamp as close as possible to the work. Ensure that the welding machine ground return clamp is well secured and makes a good electrical contact with a large metallic area of the chassis located as close as possible to the welding point.

CAUTION

Do not use TIG welding process on the vehicle. This high frequency current process can seriously damage the electronic components.

Disconnection prior to welding

PRECAUTIONS TO BE OBSERVED BEFORE ARC WELDING TO MINIMIZE THE RISK OF MAJOR AND COSTLY DAMAGES CAUSED TO THE VEHICLE ELECTRONIC COMPONENTS

1. Set the main electrical shut-off switch to the OFF position.
2. Trip circuit breakers CB2 & CB6.
3. Disconnect the electronic ground cable "**00**" from the appropriate battery post (figure on your right).
4. Ensure to clamp the welding ground return as close as possible to the area to be welded. Make sure you have a good electrical contact to the chassis.

Disconnect ground cable "00" at the post indicated on the image

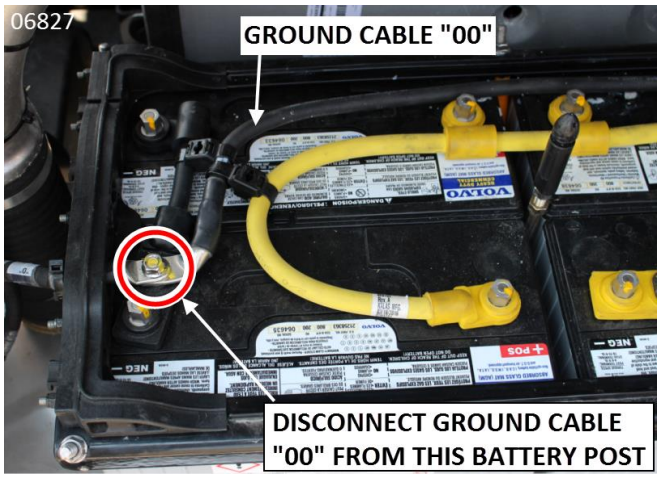

CONTENT

1. TORQUE TABLES 2

1.1 X-SERIES POWER PLANT CRADLE INSTALLATION 2
1.2 BELT TENSIONERS AND IDLERS 3
1.3 H-SERIES POWER PLANT CRADLE INSTALLATION 5

2. VOLVO D13 ENGINE 6

2.1 SYSTEM OVERVIEW 6
2.2 OVERVIEW 7
2.3 ENGINE OIL 13
2.3.1 Oil Quality 13
2.3.2 Oil Change Intervals 13
2.3.3 Oil Filters 13
2.3.4 Synthetic Lubrication 14
2.3.5 Oil Viscosity 14
2.3.6 Oil Additives 15
2.3.7 Oil Consumption 15
2.3.8 Oil Change 15
2.3.9 Oil Filters Change 16
2.3.10 Checking the Oil Level 16
2.4 POWER PLANT ASSEMBLY REMOVAL 18
2.5 POWER PLANT ASSY. INSTALLATION 20
2.6 ENGINE MOUNTS 20

3. ELECTRONIC FOOT PEDAL ASSEMBLY (EFPA) & THROTTLE POSITION SENSOR 21

4. AUTOMATIC BELT TENSIONERS AND IDLER PULLEYS INSPECTION 21

4.1 BEARING INSPECTION 23
4.2 AUTOMATIC BELT TENSIONER BUSHING WEAR 23
4.3 BELTS AND IDLERS VISUAL INSPECTION 23

5. ENGINE PROTECTION STRATEGY 23

6. SPECIFICATIONS 25

1. TORQUE TABLES

1.1 X-SERIES POWER PLANT CRADLE INSTALLATION

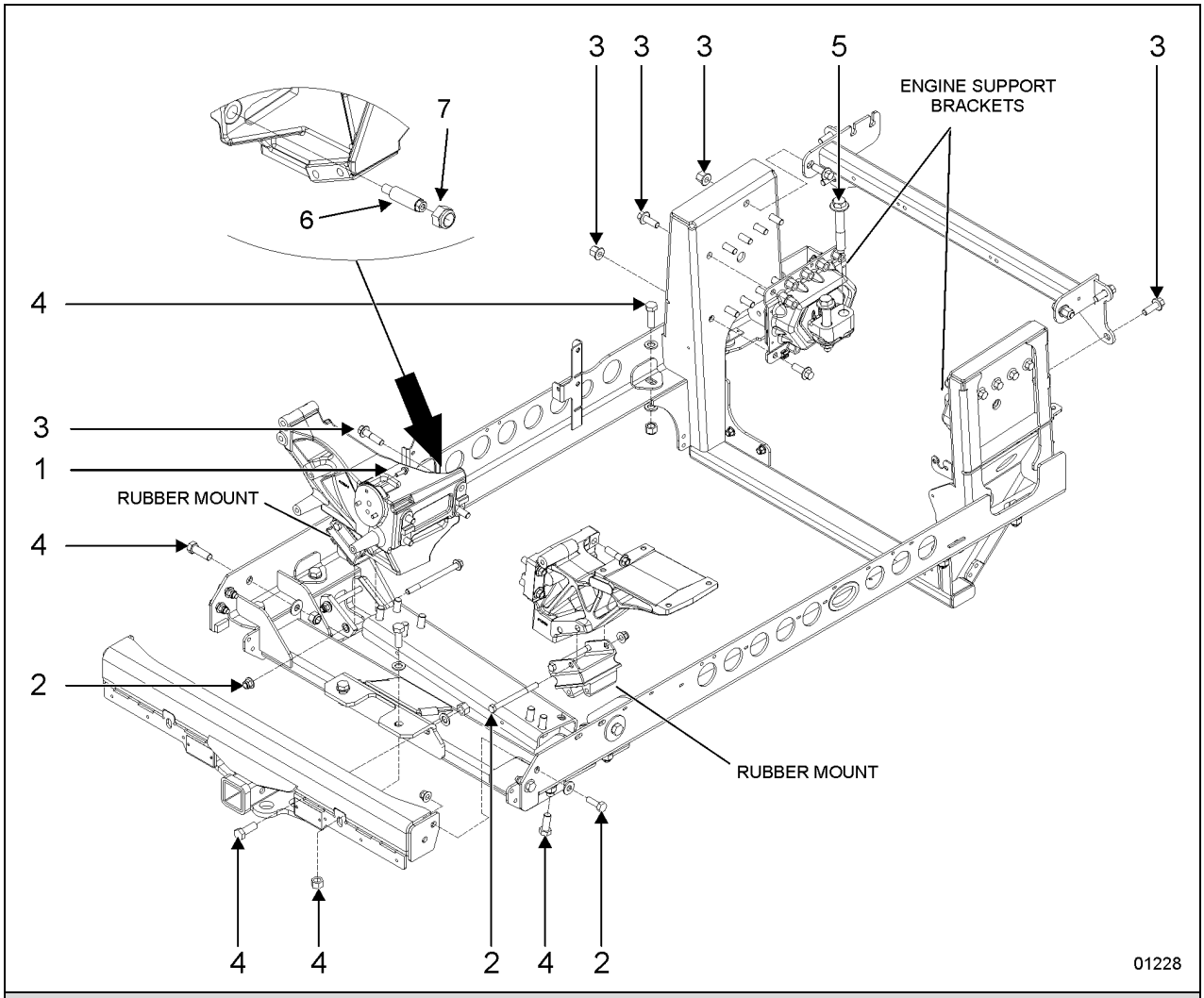

X-SERIES VOLVO ENGINE CRADLE INSTALLATION		
No	DESCRIPTION	TORQUE
1	Screw, cap hexagonal head M8 – 1.25 g8.8	14 lb-ft (19 Nm)
2	Screw, cap hexagonal head M12 – 1.75 g8.8	60 lb-ft (81 Nm)
3	Screw, cap hexagonal head M14 – 2.0 g8.8	90 lb-ft (122 Nm)
4	Screw, cap hexagonal head M16 – 2.0 g10.9	190 lb-ft (258 Nm)
5	Screw, cap hexagonal head M20 – 2.5 g10.9	450 lb-ft (610 Nm)
6	Ground stud M14 – 2.0	85-103 lb-ft (115-140 Nm)
7	Nut on ground stud M22 – 2.5	165-201 lb-ft (224-273 Nm)

1.2 BELT TENSIONERS AND IDLERS

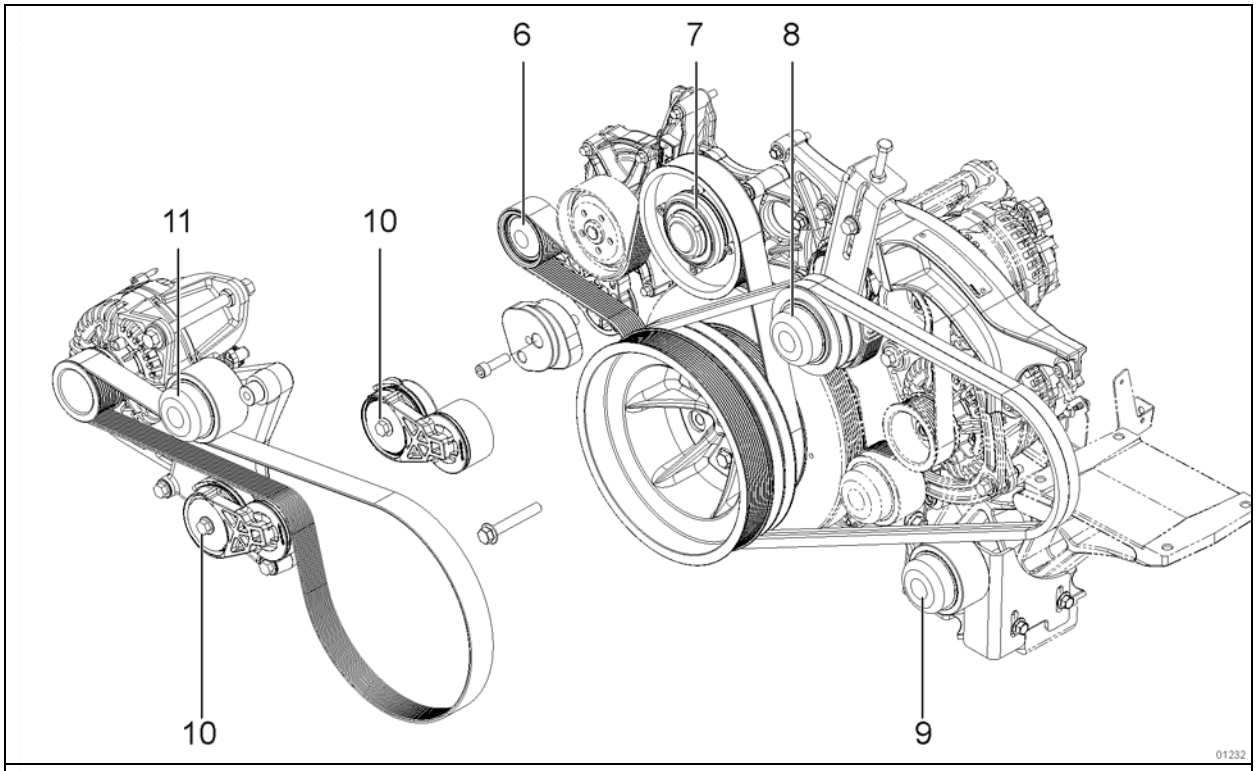

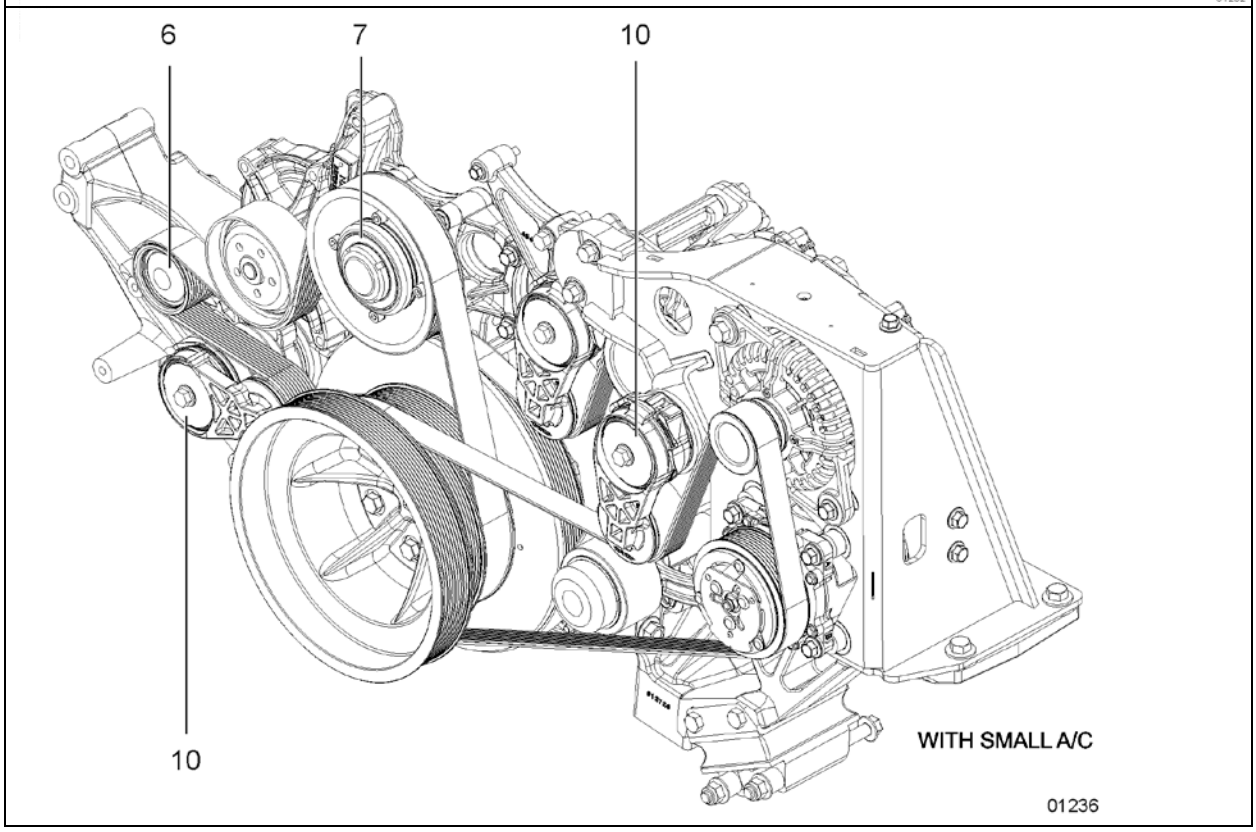

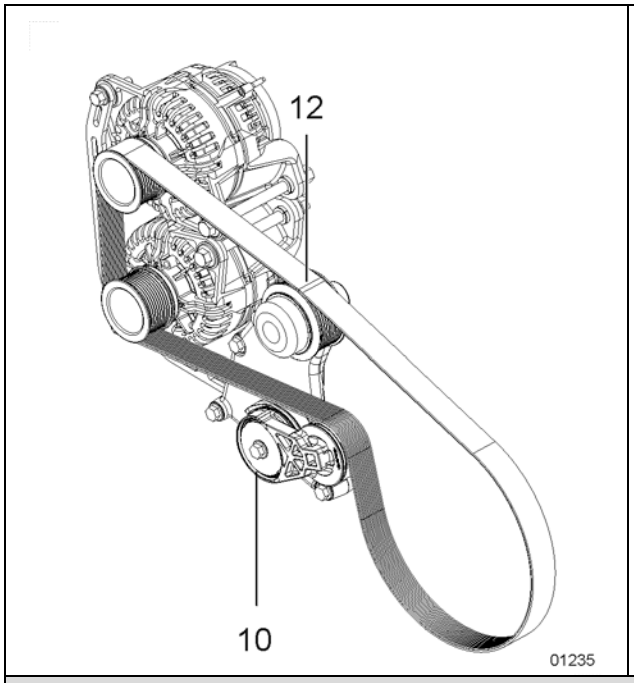

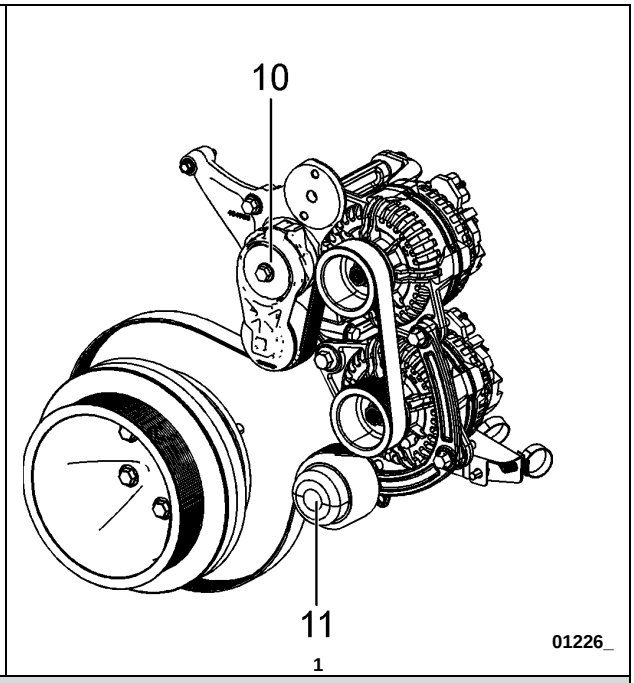

VOLVO ENGINE – DRIVE BELT IDLERS & TENSIONERS

No	DESCRIPTION	TORQUE
6	Idler, water pump drive	43 lb-ft (58 Nm)
7	Idler, water pump drive	pulley 16 lb-ft (22 Nm) shaft 32 lb-ft (43 Nm)
8	Idler, A/C compressor drive	31.5-38.5 lb-ft (43-52 Nm)
9	Idler, A/C compressor drive	82 lb-ft (111 Nm)
10	Tensioner, alternator drive	48 lb-ft (65 Nm)
11	Idler, alternator drive	82 lb-ft (111 Nm)
12	Idler left double alternator drive (X3-45 VIP)	59 lb-ft (80 Nm)

1.3 H-SERIES POWER PLANT CRADLE INSTALLATION

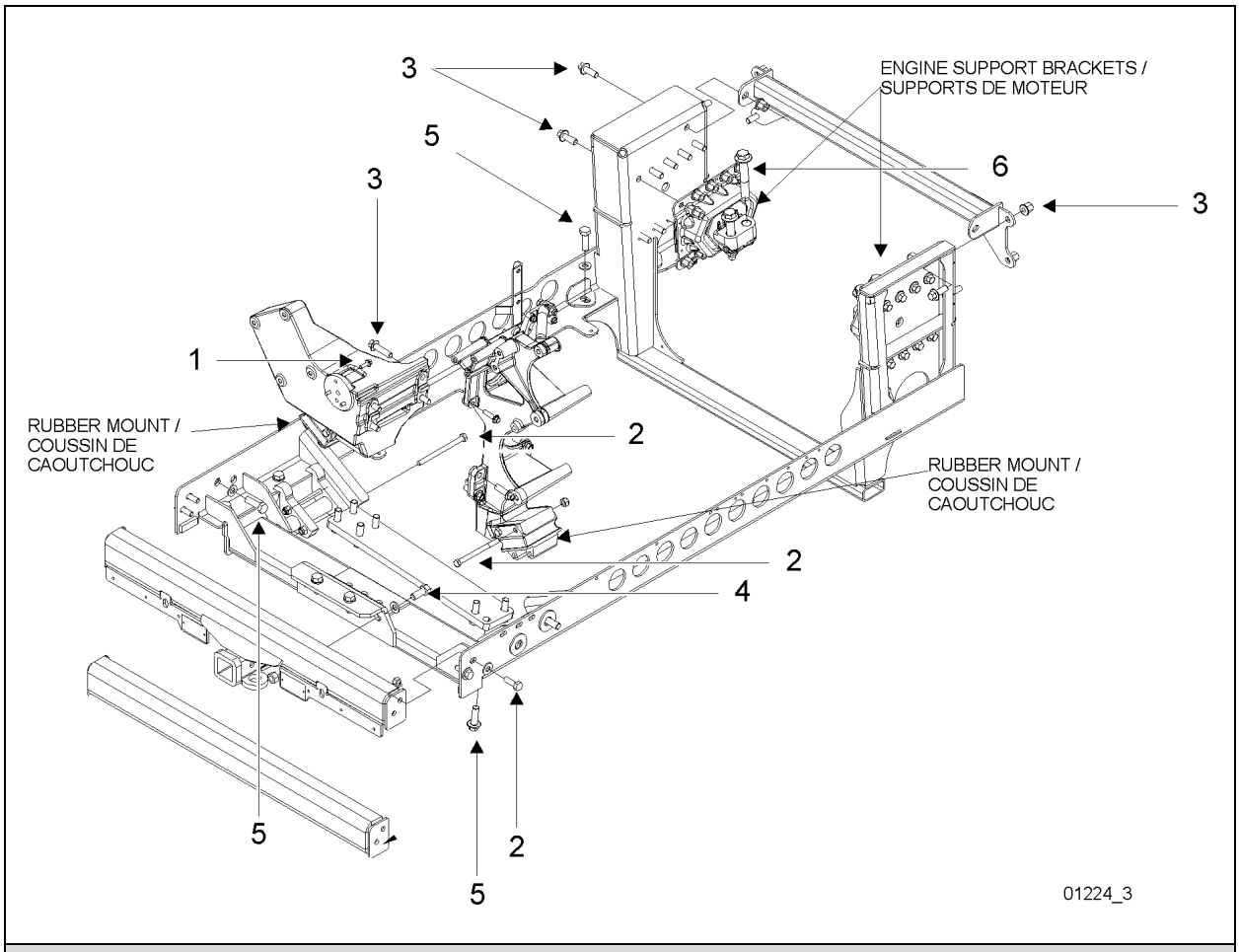

H-SERIES VOLVO ENGINE CRADLE INSTALLATION		
No	DESCRIPTION	TORQUE
1	Screw, cap hexagonal head M8 – 1.25 g8.8	14 lb-ft (19 Nm)
2	Screw, cap hexagonal head M12 – 1.75 g8.8	60 lb-ft (81 Nm)
3	Screw, cap hexagonal head M14 – 2.0 g8.8	90 lb-ft (122 Nm)
4	Screw, cap hexagonal head M16 – 2.0 g8.8	140 lb-ft (190 Nm)
5	Screw, cap hexagonal head M16 – 2.0 g10.9	190 lb-ft (258 Nm)
6	Screw, cap hexagonal head M20 – 2.5 g10.9	450 lb-ft (610 Nm)

2. VOLVO D13 ENGINE

2.1 SYSTEM OVERVIEW

NOTE
The “Premium Tech Tool” (PTT) is the preferred tool for performing diagnostic work. Contact your local dealer for more information.

The Engine Management System (EMS) controls many engine functions such as: fuel timing and delivery, engine protection functions, engine brake operation, EGR valve function and the turbocharger nozzle function. The Engine Electronic Control Unit (EECU) along with other supporting control units and sensors are responsible for monitoring and controlling these functions. These control units communicate through the J1939 high speed serial data line to share data.

In addition to their control functions, the modules have on-board diagnostic capabilities. The on-board diagnostics are designed to detect faults or abnormal conditions that are not within their operating parameters. When the system detects a fault or abnormal condition, the fault will be logged in one or both of the modules’ memory. The vehicle operator will be advised that a fault has occurred by the illumination of a malfunction indicator lamp and a message in the driver information display, if equipped. The module may initiate the engine shutdown procedure if the system determines that the abnormal condition could damage the engine. In some situations, the system will enter the "limp home" mode. Limp home mode allows continued vehicle operation but, the system may substitute a sensor or signal value that may result in reduced engine performance.

Fault codes logged in the system memory, can later be read to aid in diagnosing the fault. These faults can be read via a diagnostic computer or through the instrument cluster display, if equipped. The “Premium Tech Tool” (PTT) is the preferred tool for performing diagnostic work. Using a diagnostic computer (or PTT) connected to the Serial Communication Port, expands the technician’s diagnostic capabilities with additional data and tests.

For diagnostic software, contact your local dealer.

NOTE
For maintenance or repair information of engine components or engine-related components, please refer to Volvo Trucks USA Web Site under: Parts & Services, Online Manuals. *http://www.volvotrucks.us/parts-and-services/service/online-manuals/*

2.2 OVERVIEW

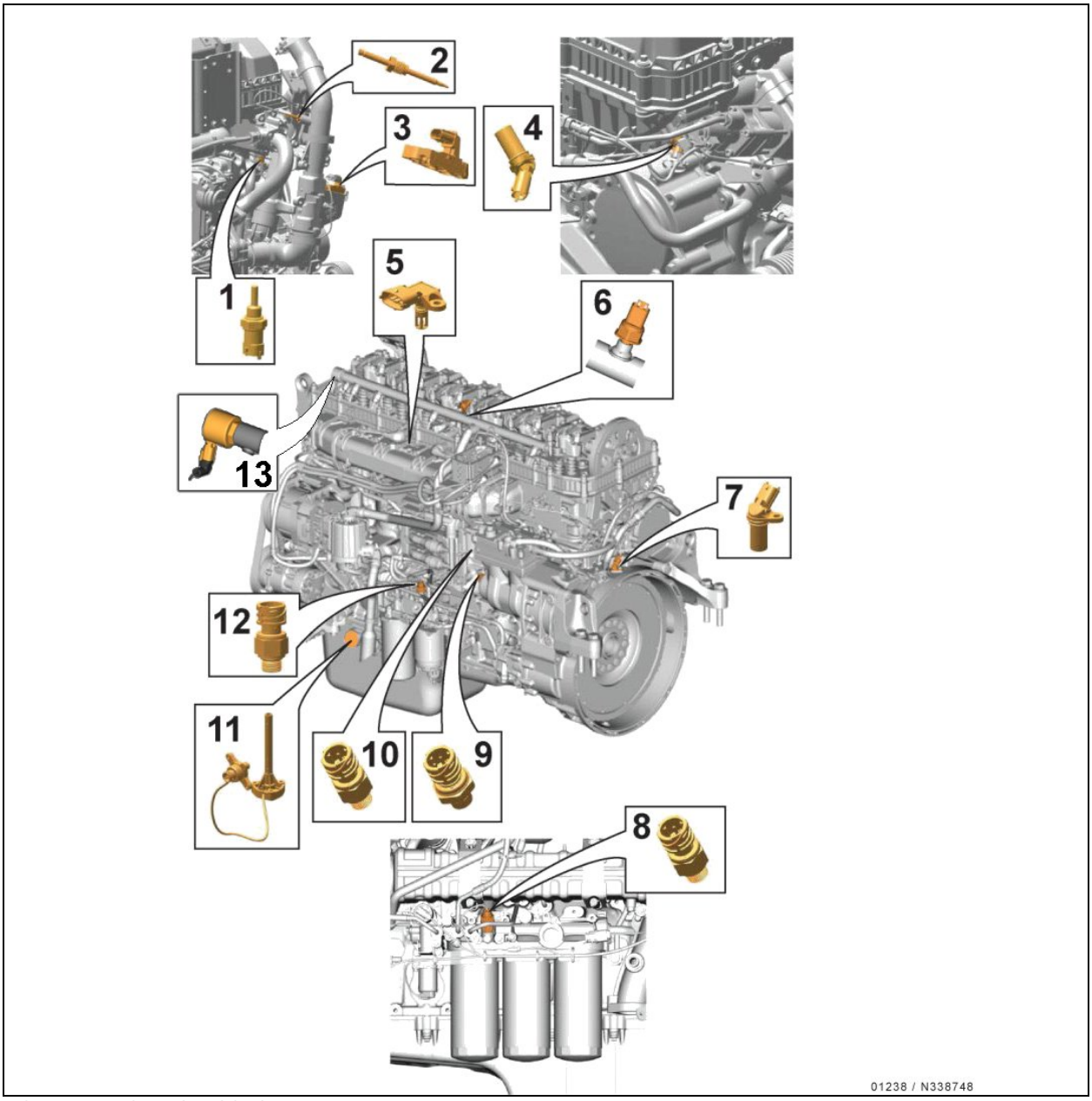

FIGURE 1: ENGINE SENSORS

1. Engine coolant temperature sensor	**7.** Crankshaft position sensor
2. EGR temperature sensor	**8.** OBD Oil pressure sensor
3. EGR differential pressure sensor	**9.** Crankcase pressure sensor
4. Camshaft position sensor	**10.** Engine oil pressure sensor
5. Intake air temperature and pressure sensor	**11.** Engine oil level and temperature sensor
6. Rail pressure sensor (high pressure fuel syst.)	**12.** Fuel pressure sensor (low pressure fuel syst.)
	13. Rail pressure relief (ePRV)

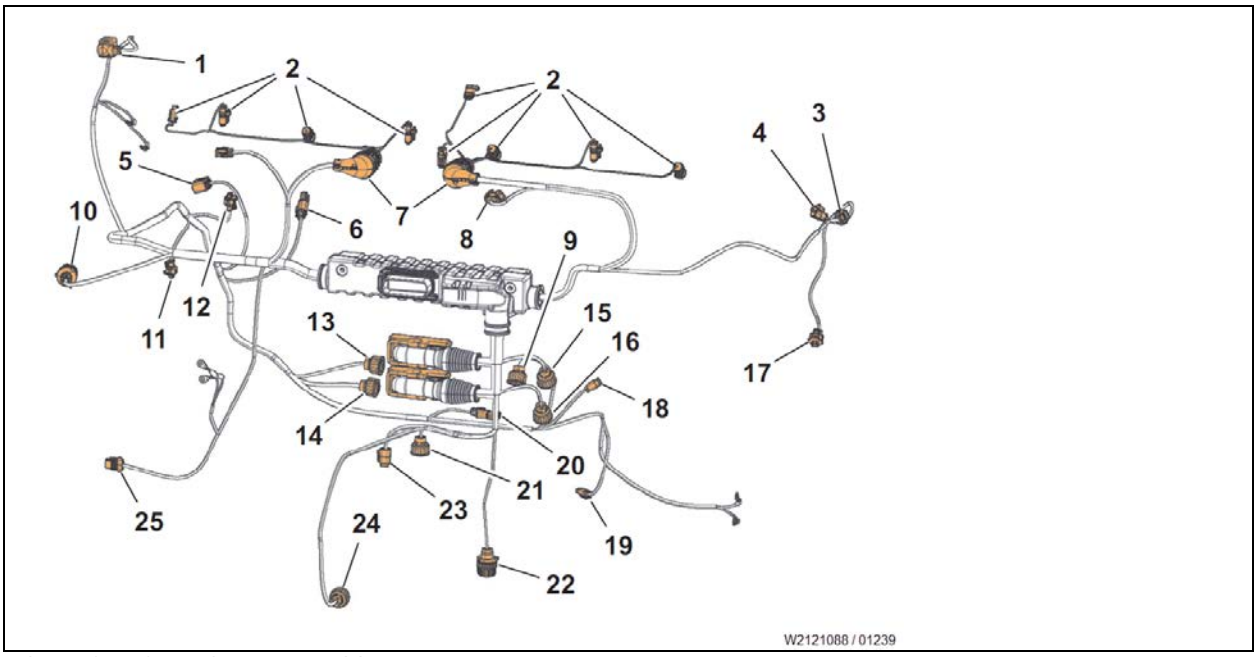

FIGURE 2: D13H ENGINE HARNESS

1. HDE throttle connector	**14.** Turbocharger Speed
2. Injectors	**15.** Oil Pressure Sensor
3. Aftertreatment Fuel Injector Pigtail	**16.** Crankcase Pressure Sensor
4. Camshaft Speed	**17.** Crankshaft Speed
5. Venturi – DP Switch	**18.** EGR Connector
6. Temperature sensor	**19.** Starter
7. Injector Harness	**20.** Piston Cooling Jet Control Valve
8. Boost/ Temp sensor	**21.** Aftertreatment Fuel Injector Pressure Valve
9. Fuel Pressure Sensor	**22.** Air Control Valve
10. Fan	**23.** Fuel Shut-off Valve
11. Clutched Water Pump	**24.** Oil Level and Temperature
12. Temperature Sensor	**25.** A/C Compressor
13. Turbocharger Actuator	

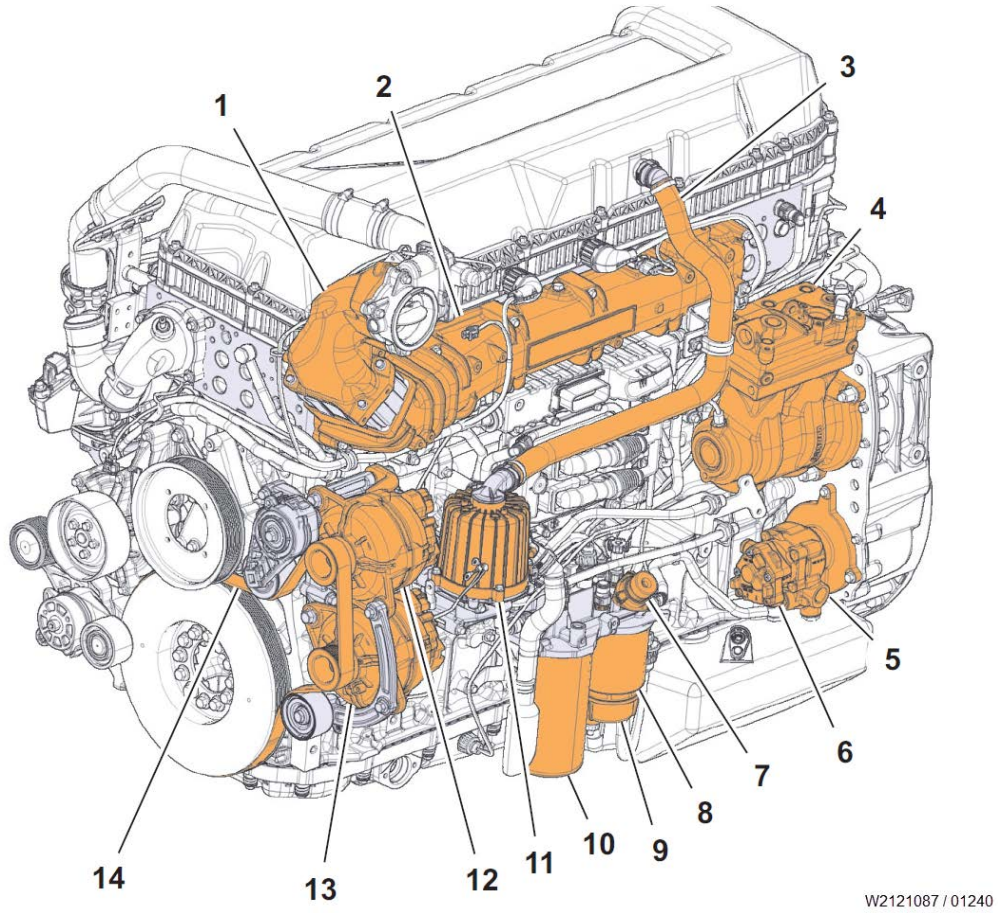

FIGURE 3: D13 ENGINE OVERVIEW, CURB SIDE SIDE

1. Mixing Chamber	8. Fuel filter (Primary)
2. Intake Manifold	9. Fuel/Water separator
3. CCV Breather Pipe	10. Fuel Filter (Secondary)
4. Air Compressor	11. Crankcase Ventilator
5. Power steering pump	12. Alternator
6. Fuel pump	13. Alternator
7. Hand-priming Pump	14. Alternator Belt

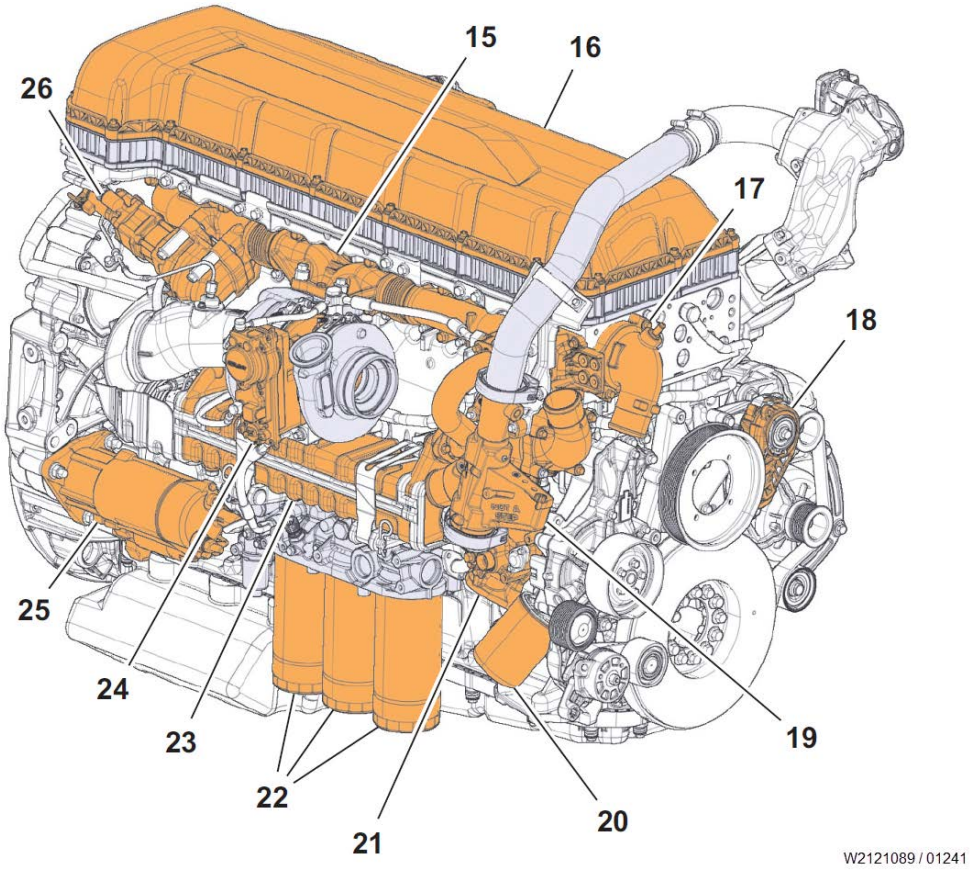

FIGURE 4: D13 ENGINE OVERVIEW, ROAD SIDE

15. Exhaust Manifold	21. Coolant Inlet Pipe
16. Valve Cover	22. Oil Filters
17. Thermostat Cover	23. EGR Cooler
18. Belt Tensioner	24. Turbocharger Actuator
19. Venturi	25. Starter
20. Coolant Filter	26. EGR Valve

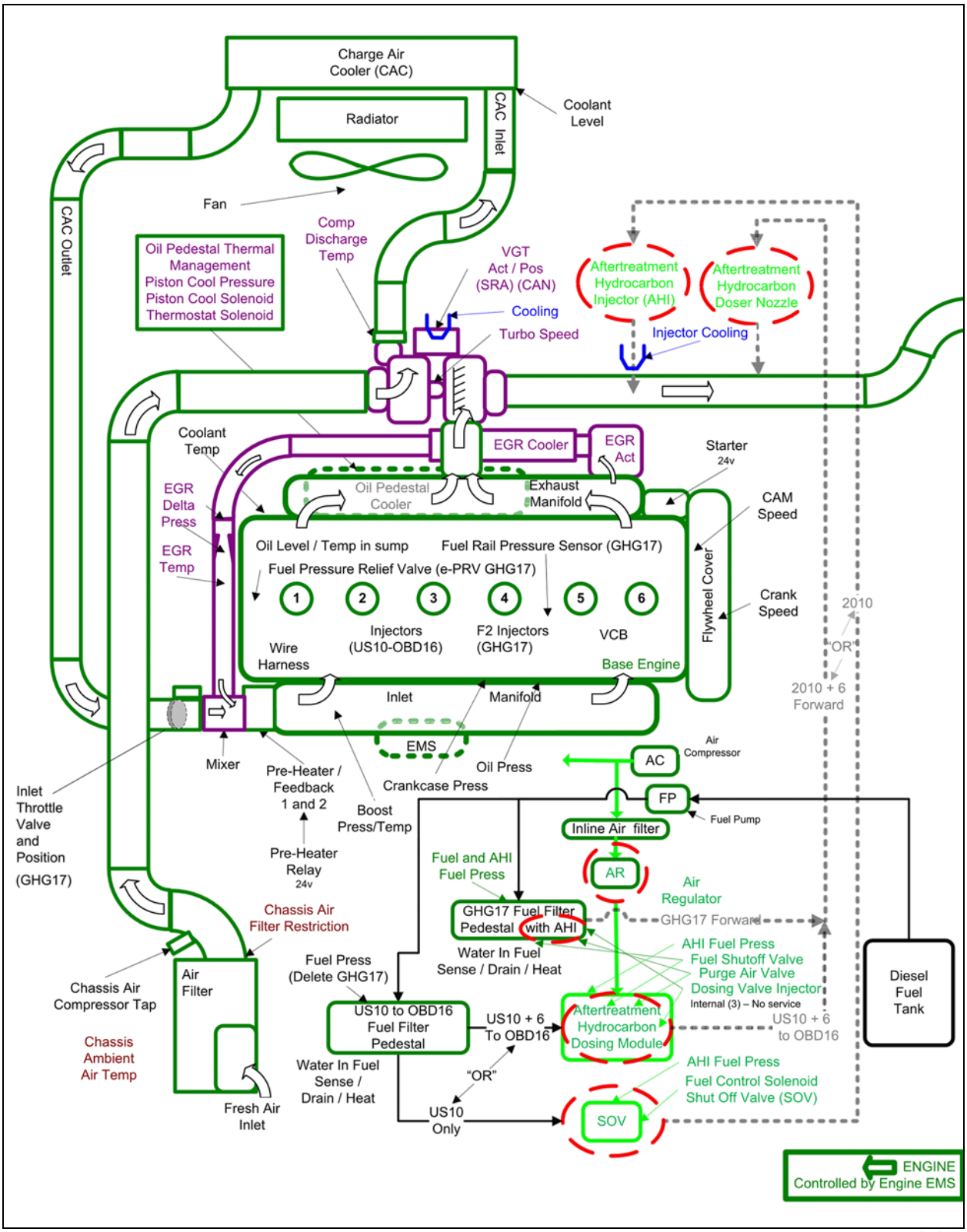

01222

FIGURE 5: 2010-2017 ENGINE & EXHAUST AFTERTREATMENT SYSTEM DIAGRAM (1 OF 2)

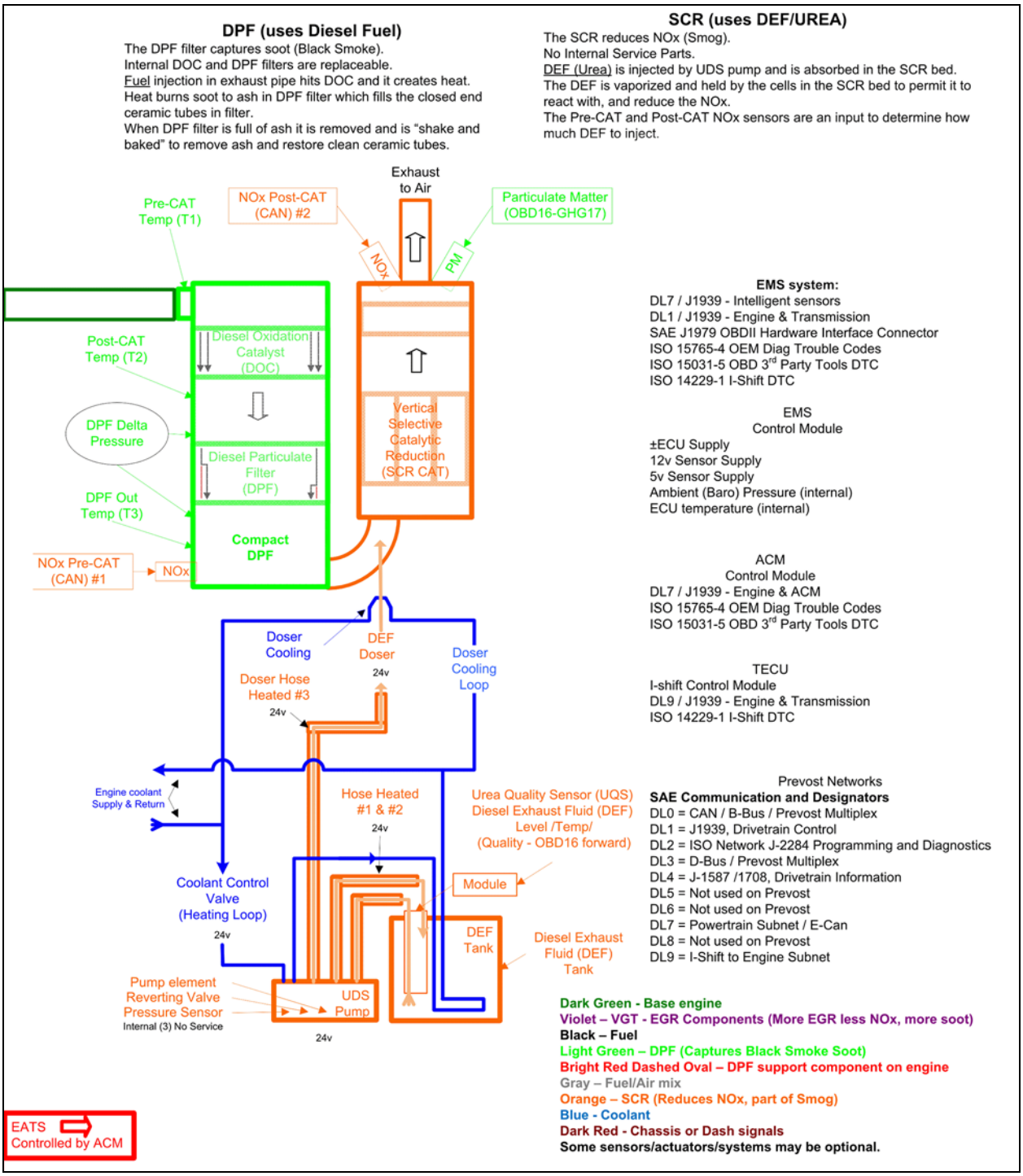

01222

FIGURE 6: 2010-2017 ENGINE & EXHAUST AFTERTREATMENT SYSTEM DIAGRAM (2 OF 2)

NOTE
For maintenance or repair information of engine components or engine-related components, please refer to Volvo Trucks USA Web Site under: Parts & Services, Online Manuals.   *http://www.volvotrucks.us/parts-and-services/service/online-manuals/*

2.3 ENGINE OIL

Keep the engine oil at the proper level and change it at the recommended intervals. Always replace the oil filters at the same time as when the oil is changed.

2.3.1 Oil Quality

Volvo North America recognizes engine oils that meet or exceed the standards given by American Petroleum Institute (API) for the oil classifications listed in this manual. Only oils licensed to carry the API symbol should be used. Lubricants meeting API standards have provided maximum engine life when used together with the recommended oil and oil filter change intervals.

VDS-4 or VDS-4.5 diesel engine oil is mandatory for use in all 2010 and later emission compliant Volvo engines. These engines, which can be identified by the presence of a DEF tank and an exhaust aftertreatment system using Selective Catalytic Reduction (SCR), also require the use of Ultra Low Sulfur Diesel (ULSD) fuel. VDS-4.5 oils exceed the new API service category CK-4.

For additional details refer to Section 24 Lubrication & Servicing.

CAUTION

DO NOT add extra oil additives. Additives such as break-in oils, top oils, graphitizers, and friction-reducing liquids are not necessary and can harm the engine.

2.3.2 Oil Change Intervals

The length of time an engine can operate before an oil change depends on the quality oil used, the type of fuel used, fuel consumption, engine oil consumption, vehicle application, level of dust in the air, and fuel consumption. The change intervals given in the Lubrication And Servicing Schedule are maximum intervals. If the vehicle is operating in heavy-duty operation, dusty or off-road conditions, etc., reduce the intervals for more frequent oil changes.

MAINTENANCE

Engine oil and filters change

Change engine oil and filters at the intervals specified by the Lubrication And Servicing Schedule in Section 24: LUBRICATION & SERVICING.

NOTE

Use the information in the table below to determine the operating condition and usage applicable to your vehicle.

engine operating condition	normal	heavy	severe
Total Fuel Consumption (mpg)	More than 6	Between 5 and 6	Less than 5
Total Fuel Consumption (L/100 KM)	Less than 39	Between 39 and 50	More than 60

NOTE: If idle time is greater than 25%, use the next lower drain interval (refer to Section 24 Lubrication and Servicing).

NOTE

Oil filters should always be changed when changing the oil.

2.3.3 Oil Filters

There are three filters on the engine, one of which is a bypass filter. This should be changed at the same time as the full-flow filter(s).

CAUTION

Volvo branded oil filters are designed to provide the proper level of filtration and protection for Volvo engines. Filters that do not meet the same stringent requirements may void engine warranty.

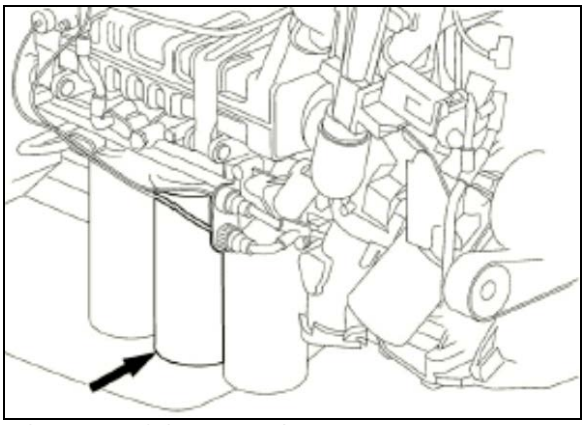

FIGURE 7: D13 OIL FILTERS

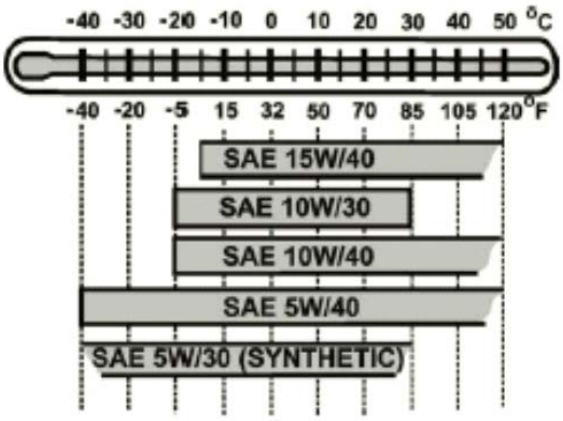

2.3.4 Synthetic Lubrication

Synthetic oils are offered by some oil suppliers as an alternative to the traditional, petroleum based oils for engines. These oils may be used in Volvo engines, provided they meet the quality levels the traditional, petroleum based oils for engines. These oils may be used in Volvo engines, provided they meet the quality level VDS-4.

The use of synthetic oils does not permit the extension of the recommended oil change intervals.

2.3.5 Oil Viscosity

The viscosity grade defines the thickness of the oil. The oil must be thin enough at low temperatures for easy cold starts and thick enough to protect at high temperatures. Oil is not fully defined until both the API quality classification and the viscosity grade are specified.

Choose the viscosity grade for the typical ambient temperature for the application. Multigrade oils have a broad range that suit operation in changing temperature.

Volvo North America recommends the viscosities shown in the viscosity/temperature table for Volvo engines.

2.3.6 Oil Additives

CAUTION

Extra oil additives must never be added to any engine oil used. Additives such as break-in oils, top oils, graphitizers, and friction reducing liquids are not necessary and may even harm the engine.

Using oils to the quality standards recommended in this manual makes the use of extra oil additives unnecessary, as these oils already contain a balanced treatment of additives.

2.3.7 Oil Consumption

Once the engine is stopped, check the oil level daily. If the engine has just been stopped and it is warm, wait approximately five minutes to allow the oil to drain back to the oil pan before checking. Add oil as necessary.

CAUTION

DO NOT overfill engine with oil.

All diesel engines are designed to consume some oil, so it is normal to add oil periodically. An engine used in heavy-duty operation will consume more oil than one in normal operation.

2.3.8 Oil Change

WARNING

A hot engine or engine oil can be dangerous. Serious burns can result from contact with a hot engine or oil. Take precautions when draining the oil. Wear gloves or let the engine cool down before draining.

WARNING

When draining the oil, use the proper tools and keep away as far as possible. Raise the elbow so the forearm is parallel to the ground to prevent oil running down the arm, causing burns.

CAUTION

Always dispose of all lubricants (motor oil, coolant, gear box oils, etc) and filters according to Federal or local regulations. Used oil disposed of in nature or waterways contaminates our drinking water and kills wildlife.

WARNING

Prolonged contact with used engine oil may be harmful. Use rubber gloves when handling used oil. Wash skin thoroughly if it comes in contact with used oil.

It is important to drain as much oil as possible. Try to change oil immediately after driving, when the oil is warm. Always replace the oil filters when changing the oil.

component	capacity	
	liters	quarts
Oil pan low/high mark	24 – 32	25 – 34
Refill volume including filter change	38	40

NOTE

Since about 1 liter of oil remains in the engine after draining, approximately 38 liters will be needed for a complete oil change.

2.3.9 Oil Filters Change

WARNING

Hot oil can cause severe burns. DO NOT allow hot oil to contact the skin. When changing oil, wear protective gloves.

CAUTION

Volvo-branded oil filters are designed to provide the proper level of filtration and protection for Volvo engines. Filters that do not meet the same stringent requirements may cause unsatisfactory results.

- Clean around the oil filter housing and remove the filters using the oil filter wrench or the oil filter socket.

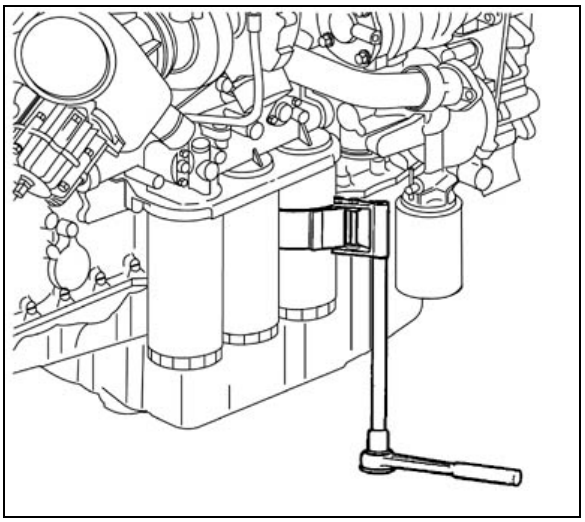

FIGURE 8: OIL FILTER WRENCH

- Prefill the new oil filters with approved engine oil. Also, lubricate the filter gaskets with engine oil (1). Hand tighten the oil filters until they contact the sealing surface of the oil filter housing (2). Manually tighten the oil filters an additional ¾ to 1 full turn (3).

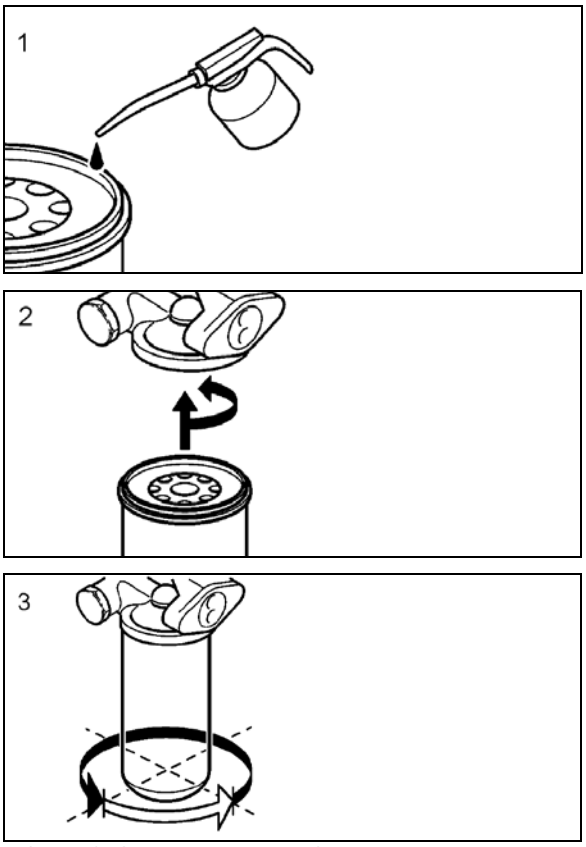

FIGURE 9: OIL FILTER REPLACEMENT

- Start the engine and check for leaks around the oil filter housing and filters.
- Check the oil level. Add approved engine oil to the recommended level, if necessary. Do not overfill.

2.3.10 Checking the Oil Level

Ensure that the vehicle is parked on level ground before checking the oil level. Wait five minutes after shutting off the engine and then proceed with checking the oil.

CAUTION

DO NOT let the oil level fall below the marking on the dipstick. **DO NOT** overfill so the level is above the upper marking on the dipstick. This could lead to excessive oil temperature and/or poor crankcase breather performance. Add oil through the oil filler pipe as required in order to maintain level within the safe range.

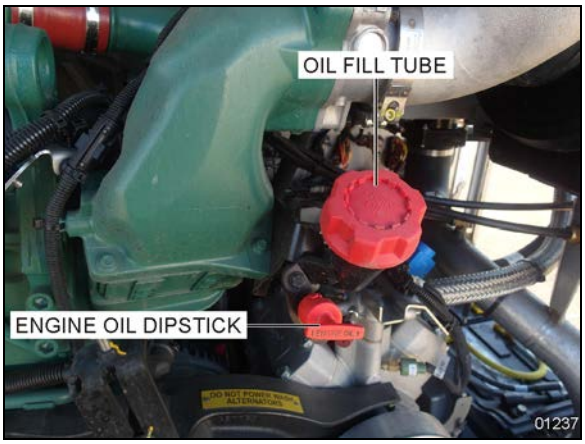

FIGURE 10: ENGINE OIL FILLING TUBE

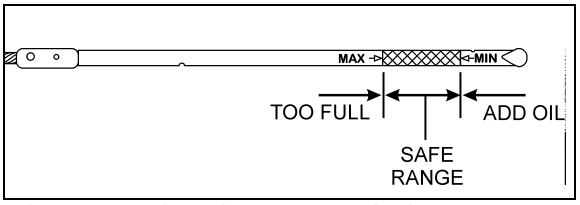

FIGURE 11: ENGINE OIL LEVEL DIPSTICK

2.4 POWER PLANT ASSEMBLY REMOVAL

To access the engine or engine-related components, the vehicle power plant assembly must be removed as a whole unit by means of a slide-out cradle. The power plant assembly includes the engine, transmission (including retarder if so equipped), air compressor, alternator and transmission oil cooler.

Remove the power plant assembly as follows:

CAUTION

Tag hoses and cables for identification before disconnecting in order to facilitate reinstallation. Plug all openings to prevent dirt from entering the system.

NOTE

No parts within the EECU are serviceable. If found defective, replace the EECU as a unit.

- **First**

1. Close the heater line shut-off valves.
2. Disconnect batteries from the starting system by removing battery cables. With the electrical circuit disrupted, accidental contact with the starter button will not produce an engine start.

WARNING

Due to the heavy load of the rear bumper assembly, it must be adequately supported before attempting to remove it.

3. Remove the rear bumper assembly complete with hitch if applicable from the vehicle. Refer to Section 18, BODY, under "REAR BUMPER REMOVAL".
4. Using the quick-connect drain hose, drain the engine cooling system. Refer to Section 05, COOLING under "DRAINING COOLING SYSTEM".
5. If applicable, disconnect the block heater connector located near the EGR mixing chamber.

- **With Vehicle Raised**

1. Using a vehicle lift or jack, raise vehicle to access transmission fasteners and wire harness.
2. From under the vehicle, disconnect the propeller shaft as detailed in Section 09, under heading "Propeller Shaft Removal".
3. Partially remove L.H. side transmission protective panel to access connectors.
4. Disconnect transmission harness from transmission housing.
5. On vehicles equipped with an automatic transmission provided with a hydraulic output retarder, disconnect steel-braided airline from pressure regulator output. The pressure regulator is mounted in the upper section of engine compartment backwall and is accessible through the engine compartment R.H. side door.
6. Remove the retaining bolts, washers and nuts securing the power plant cradle to the vehicle rear subframe.
7. Disconnect the engine coolant hose near the starter.
8. Disconnect air compressor suction and discharge hoses.

- **With Vehicle Lowered**

Lower the vehicle enough to access all components.

➢ Engine Compartment R.H. side

1. If applicable, remove auxiliary sump tank to ease access.
2. Purge the A/C system and disconnect the A/C compressor hoses. Refer to Section 22, HEATING AND AIR CONDITIONING under "CENTRAL AIR CONDITIONING".
3. Disconnect cables from chassis grounds.
4. Inside engine compartment, disconnect starter, alternators and heater cables. Also disconnect AFSS cable if applicable.

Disconnect from engine, connector C397 and vehicle interface harness connector located above EECU connectors. Also disconnect DPF cable.

5. Disconnect power steering pump hoses.

6. Close engine fuel supply shut-off valve on primary fuel filter or Fuel Pro. Disconnect the fuel line located above fuel filters and connected to inlet port. On vehicles equipped with the optional water-separator-fuel-filter, disconnect the connector and remove cable ties from cradle.
7. Disconnect fuel return line from bulkhead fixed on engine cylinder head end.
8. Locate the A/C compressor belt tensioner pressure releasing valve (if so equipped). Turn pressure releasing valve handle counterclockwise in order to release pressure in belt-tensioner air bellows and loosen belts (Figure 12). Remove the belts.

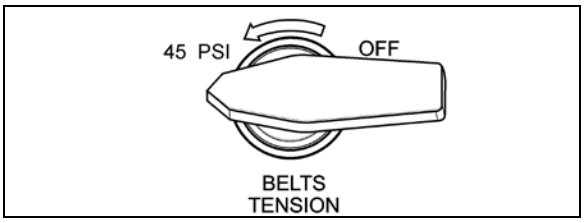

FIGURE 12: BELT TENSIONER VALVE ON REAR CONTROL PANEL (OPTION)

9. At the back of the air cleaner, disconnect the engine-air intake duct mounted between air cleaner housing and turbocharger inlet.

CAUTION

To avoid damage to turbocharger, cover the turbocharger inlet opening to prevent foreign material from entering.

10. Disconnect and remove the exhaust pipe mounted between the flexible coupling and the pipe going to the Diesel Oxidation Catalyst (DOC) and Diesel Particulate Filter (DPF) assembly. If necessary, refer to Section 4: EXHAUST SYSTEM under “EXHAUST AFTERTREATMENT SYSTEM OVERVIEW".
11. Disconnect and remove the air intake duct mounted between the charge air cooler outlet and the engine intake.

➢ Engine Compartment L.H. side

1. At the turbocharger inlet, disconnect and remove the engine-air intake duct mounted between air cleaner housing and turbocharger inlet.
2. Disconnect and remove section of coolant pipe assembly mounted between the radiator outlet and the water pump inlet.
3. Disconnect and remove a section of coolant pipe assembly mounted between the thermostat housing and the radiator inlet.
4. Disconnect and remove surge tank hose connected to pump inlet pipe and hose connected to engine.
5. Disconnect and remove the air intake duct mounted between the turbocharger outlet and the air cooler inlet.
6. Unfasten and put aside engine compartment lighting fixture and turbocharger fire suppression nozzle if applicable.
7. Disconnect Exhaust Aftertreatment System control cable.

- **Last**

1. Inspect the power plant assembly to ensure that nothing will interfere when sliding out the cradle. Check for connections or hoses not mentioned in this list as some vehicles are equipped with special or aftermarket components.
2. Make sure the ten retaining bolts, washers and nuts securing the power plant cradle to the vehicle rear subframe are removed.

NOTE

Check if any spacer(s) have been installed between power plant cradle and vehicle rear subframe, and if so, note position of each washer for reinstallation purposes.

3. Using a suitable equipment with a minimum capacity of 4,000 lbs (1 800 kg), slightly raise the power plant cradle.
4. Pull engine out slowly from the engine compartment. Make sure all lines, wiring and accessories are disconnected and are not tangled.

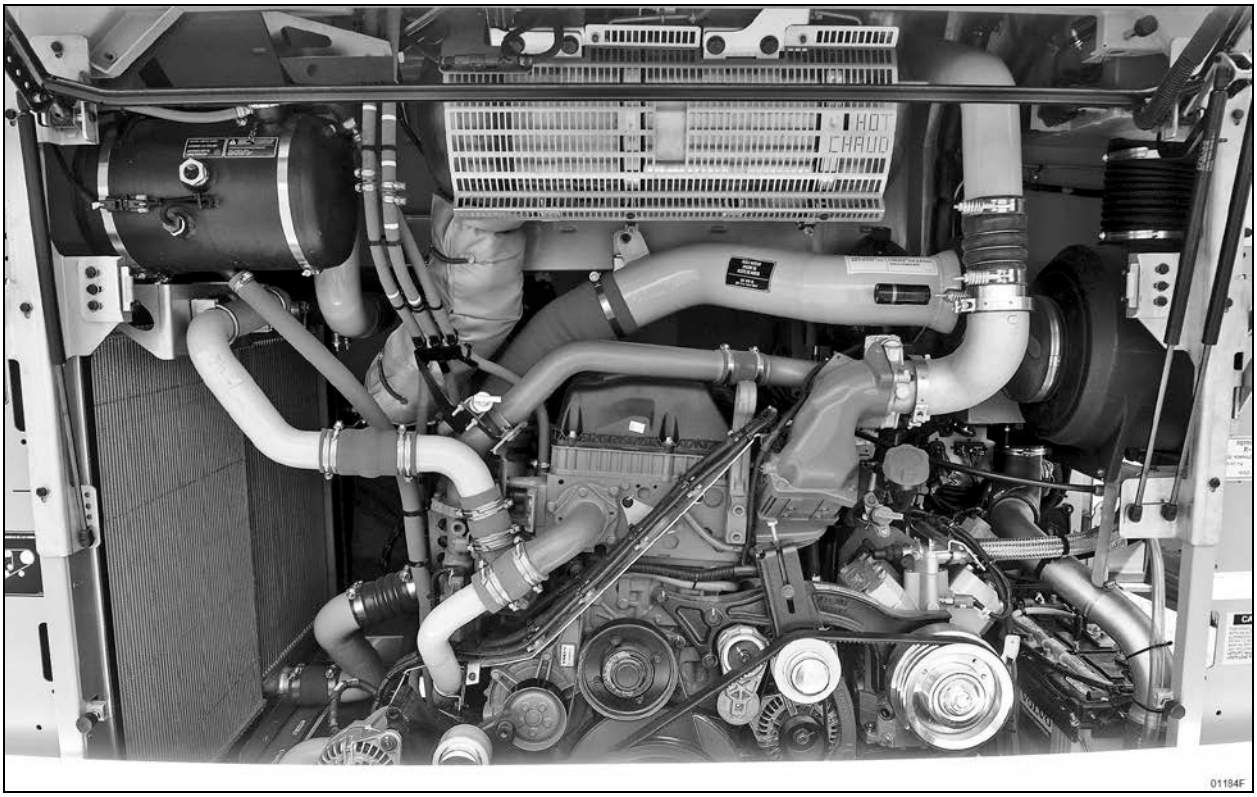

FIGURE 13: TYPICAL X SERIES ENGINE COMPARTMENT

2.5 POWER PLANT ASSY. INSTALLATION

To install a power plant assembly, follow the same procedure as in "Power Plant Assembly Removal" except in reverse order, then proceed with the following:

1. Torque the power plant cradle mounting bolts.

   TORQUE: 190 lb-ft (258 Nm)

2. Refill cooling system with saved fluid (refer to Section 05 COOLANT SYSTEM).
3. Once engine fuel system has been drained, it will aid restarting if fuel filters are filled with fuel oil (refer to Section 03 FUEL SYSTEM).
4. Start engine for a visual check. Check fuel, oil, cooling, pneumatic and hydraulic system connections for leakage. Test operation of engine controls and accessories.

2.6 ENGINE MOUNTS

The power plant assembly is mounted to the cradle by means of rubber mounts and supports.

Two engine support brackets are used at the front of the engine while two rubber mounts are mounted underneath the engine & radiator fan drive mechanism support and the engine & alternator support.

It is recommended that new rubber mounts be installed at each major overhaul.

3. ELECTRONIC FOOT PEDAL ASSEMBLY (EFPA) & THROTTLE POSITION SENSOR

The Electronic Foot Pedal Assembly (EFPA) connects the accelerator pedal to a Throttle Position Sensor (TPS). The (TPS) is a device, which sends an electrical signal to the Motor Control Module (MCM). The TPS varies in voltage depending on how far the pedal is depressed. The system is installed in the space normally occupied by a mechanical foot pedal. The (EFPA) has maximum and minimum stops that are built into the unit during manufacturing (Figure 14). The (TPS) converts the operator's foot pedal input into a signal for the MCM.

When installed by the equipment manufacturer, the TPS should not require adjustment. If the TPS is suspected of being misadjusted, confirm that the sensor is installed in accordance with the manufacturer's specifications. It is recommended that the idle count be at 50 or higher with a full throttle count of up to 200.

The TPS is self-calibrating and therefore has no optimum closed throttle or wide open throttle count value. If the counts are within the 50 to 200 range, the sensor is properly set.

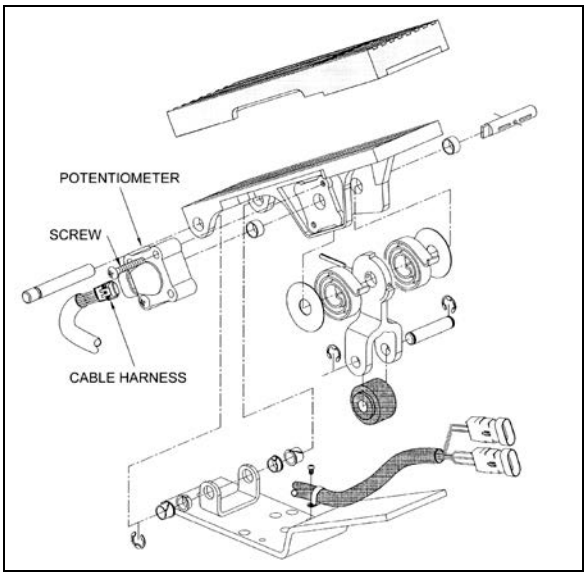

FIGURE 14: ELECTRONIC FOOT PEDAL ASSEMBLY 3035

Monitor the (TPS) at the controls as you move it through its full stroke. Be sure there is no misalignment or obstruction preventing the smooth movement of the TPS through the full stroke. Using a diagnostic data reader, check that the idle and full throttle position counts do not fall within the error zones. The error zones occur when the idle position is less than 14 counts, or when the full throttle position is more than 233 counts. Should these conditions occur, the CPC will signal diagnostic codes of 21-12 for idle error and 21-23 for wide-open throttle error.

4. AUTOMATIC BELT TENSIONERS AND IDLER PULLEYS INSPECTION

With the engine running, if noise is coming from the tensioners or drive system, an inspection with the engine off is necessary.

MAINTENANCE

Remove belts and inspect automatic belt tensioners, idler pulley bearings at the intervals specified by the Lubrication And Servicing Schedule in Section 24: LUBRICATION & SERVICING.

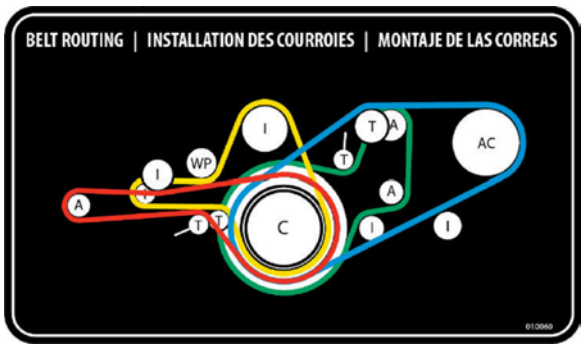

FIGURE 15: X3 COACH BELT ROUTING

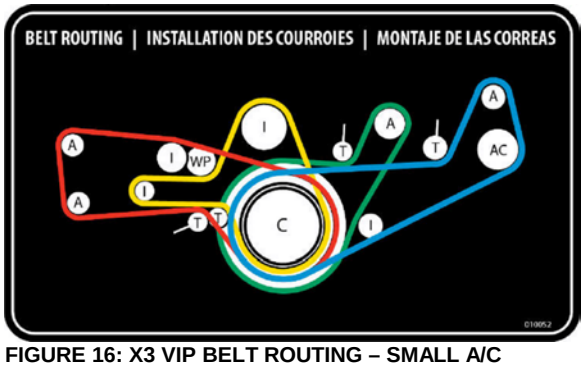

FIGURE 16: X3 VIP BELT ROUTING – SMALL A/C SYSTEM,

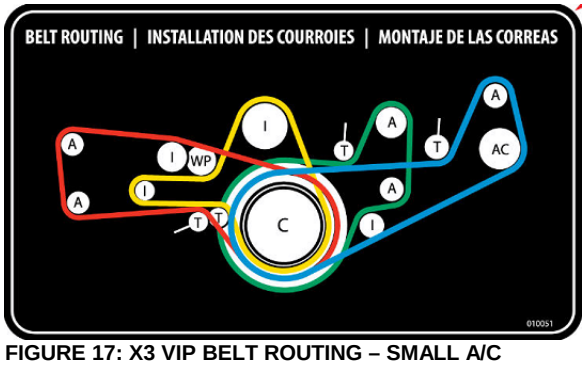

FIGURE 17: X3 VIP BELT ROUTING – SMALL A/C SYSTEM, 5 ALTERNATORS

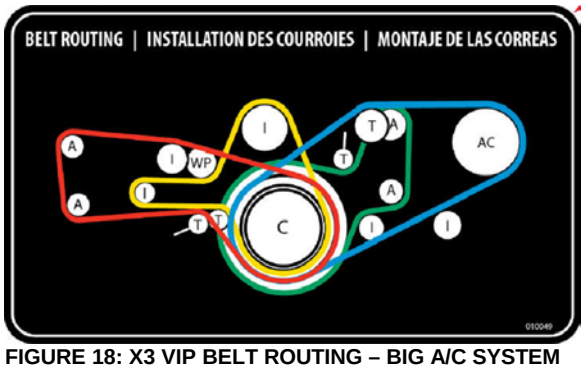

FIGURE 18: X3 VIP BELT ROUTING – BIG A/C SYSTEM

A=alternator
C=crank pulley
I=dler
WP=water pump
T=tensioner
AC=air conditioning compressor

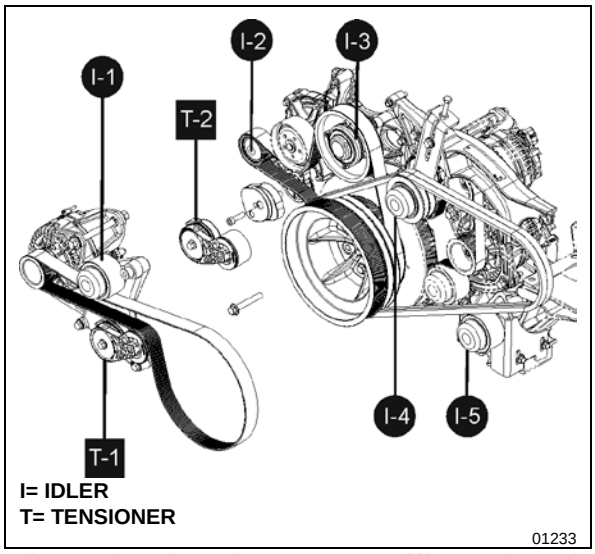

FIGURE 19: X-SERIES IDLER PULLEYS, AUTOMATIC BELT TENSIONERS ON ENGINE ACCESSORIES

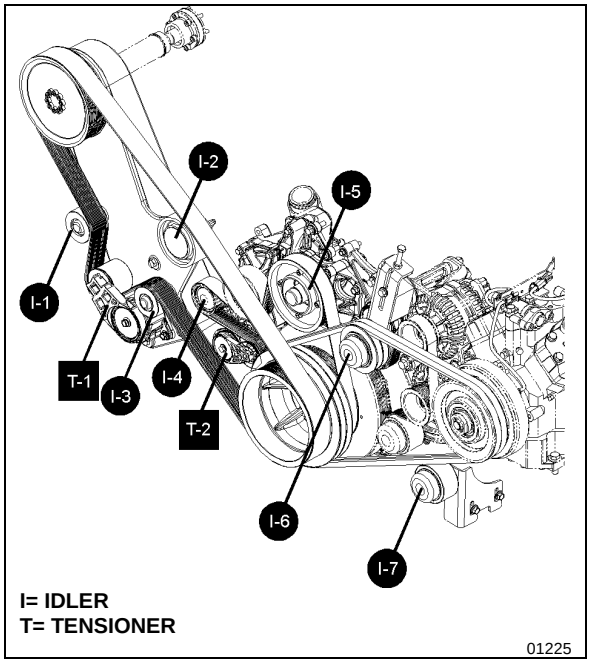

FIGURE 20:H-SERIES IDLER PULLEYS, AUTOMATIC BELT TENSIONERS ON ENGINE ACCESSORIES

4.1 BEARING INSPECTION

1. First, set parking brake, turn the ignition OFF and set the rear start selector switch to the OFF position.
2. Remove all belts on left hand alternator, water pump drive, A/C compressor drive and alternator drive.

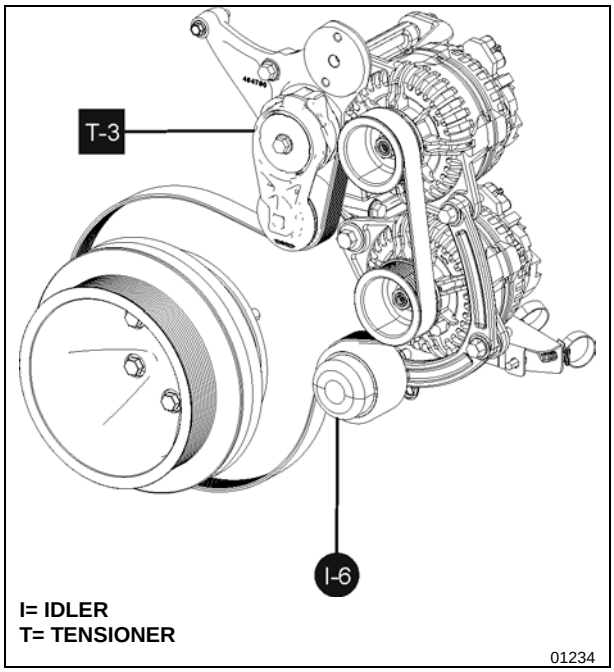

FIGURE 21: IDLER AND AUTOMATIC BELT TENSIONER ON ALTERNATOR DRIVE

3. Spin all idler pulleys, I-1 thru I-6, plus the idlers that are part of the automatic belt tensioners T-1 thru T-3.
4. Listen if some idlers are noisy and check for play in the bearings by hand.
5. Replace noisy idlers or if a play is found. Replace the automatic belt tensioner as a complete unit.
6. Record the results of the inspection.

4.2 AUTOMATIC BELT TENSIONER BUSHING WEAR

Automatic belt tensioner bushing wear may results in belt misalignment.

1. Check the automatic belt tensioner T-1 thru T-3.
2. Pry the automatic belt tensioner arm and check for a play between the arm and the spring case (see image below).

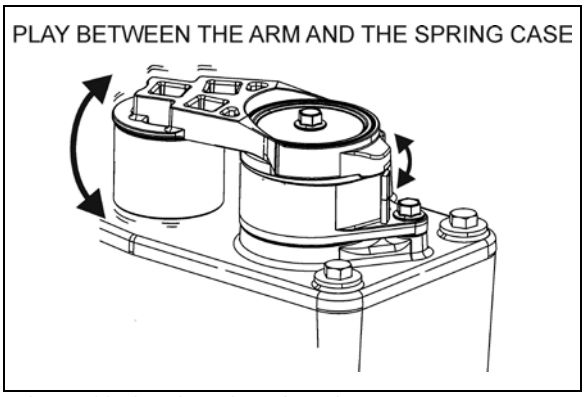

FIGURE 22: CHECKING BUSHING WEAR

3. If bushing wear is suspected, remove the tensioner. Inspect the tensioner for any signs of wear. Check for bearing noise as well as metal to metal contact between the arm and spring case which is a sign of bushing wear. Check for cracks in the tensioner body.
4. Replace the automatic belt tensioner if found defective.
5. Record the results of the inspection.

4.3 BELTS AND IDLERS VISUAL INSPECTION

1. Inspect drive belts for cracks, frayed material, missing chunks in the belt, abrasion and peeling. Replace belts if damaged.
2. Visually inspect all idlers for signs of deterioration, loose fasteners, etc.
3. Record the results of the inspection.

MAINTENANCE

Visually inspect belts and idlers for signs of deterioration, cracks, frayed material at the intervals specified by the Lubrication And Servicing Schedule in Section 24: LUBRICATION & SERVICING.

5. ENGINE PROTECTION STRATEGY

The engine protection system will automatically derate or derate and stop the engine when certain engine conditions reach a critical stage.

In the event of a serious fault, the red STOP telltale light comes on and an audible alarm will sound if the engine is running.

Prior to an actual automatic shutdown, the engine will automatically derate, go to idle, and then stop in 30 seconds.

ENGINE PROTECTION LOGIC (with yellow CHECK or red STOP telltale light)	
High engine coolant temperature	Shutdown
High engine oil temperature	Shutdown
Low engine oil pressure	Shutdown
High crankcase pressure (rate of change)	Shutdown
Low coolant level	Derate only
High intake manifold air temperature	Derate only
High transmission oil temperature	Derate only
High temperature of cooled exhaust gas (EGR) - after EGR cooler	Derate only
EGR valve and position error	Derate only
Variable Geometry Turbo (VGT) valve and position error	Derate only
High VGT actuator temperature	Derate only
High pre-Diesel Oxidation Catalyst (DOC) temperature	Derate only
High Compressor Discharge Temperature (CDT – measured)	Derate only
High soot load	Derate only
High Diesel Particulate Filter (DPF) pressure differential (DP)	Derate only

OUTSIDE ENGINE PROTECTION LOGIC (no yellow CHECK or red STOP telltale light)	
High altitude (ensures that high compressor discharge temp. is never reached)	Derate only
Turbo over-speed	Derate only
Low coolant temperature	Derate only
Crank sensor failure	Derate only
High crankcase pressure - Absolute Pressure	Shutdown

6. SPECIFICATIONS

Volvo D13 Engine

Make ..... Volvo

Type ..... Diesel four cycle/in-line direct injection engine

Description .....Turbo/Air to air charge cooled

No. of cylinders.....12.8 L in-line 6.

Operating range .....1400-1800 RPM

X3-45 and H345 Coaches Peak Power Rating ..... 435 HP (324 kW)

X3-45 and H345 Coaches Peak Torque Rating.....1650 Ft-lb (2237 Nm)

X3-45 Bus Shells, X3-45 VIP and H345 VIP Peak Power Rating ..... 500 HP (373 kW)

X3-45 Bus Shells, X3-45 VIP and H345 VIP Peak Torque Rating.....1750 Ft-lb (2374 Nm)

Low Idle .....600 rpm

Fast Idle.....2150 rpm

Maximum full load revolutions.....1900 rpm

Engine oil level quantity

Oil Pan Capacity, Low Limit.....25 quarts/24 liters

Oil Pan Capacity, High Limit.....34 quarts/32 liters

Refill volume including filter change.....40 quarts/38 liters

Lubricating oil filter elements

Type .....By-pass

Prevost number.....510938

Type ..... Full Flow

Prevost number.....488736

Torque specification

Engine oil filter.....Tighten ¾ of a turn to 1 full turn after gasket contact

Filters

Engine Air Cleaner Filter

Prevost number 531359

Engine Coolant Filter/Conditioner

Prevost number.....20458771

MAINTENANCE INFORMATION

MI16-16

DATE :	FEBRUARY 2016	SECTION : 01 - Engine
SUBJECT :	**VOLVO D13 ENGINE – STARTER REMOVAL AND INSTALLATION**	

DESCRIPTION

This procedure applies to current Melco 105P70 starter part number #21212425.

REQUIRED TOOLS

RATCHET EXTENSION BAR	**RATCHET AND SOCKET SET – METRIC**
CORDLESS DRILL	**BRASS WIRE CUP BRUSH**
TORQUE WRENCH	**CUTTING PLIERS**
VOLTMETER / MULTIMETER	**METRIC OPEN END WRENCH SET**

PROCEDURE – STARTER REMOVAL AND INSTALLATION

DANGER

Park vehicle safely, apply parking brake, stop engine. Prior to working on the vehicle, **set the ignition switch to the OFF position,** the battery master switch to the OFF position and trip the main circuit breakers equipped with a trip button.

RISK OF ELECTRICAL SHOCK

1. The starter is connected to the batteries through master relay R1. If the ignition switch is in the OFF position and the battery master switch (master cut-out) is set to the OFF position, there should not be electrical power to the starter **B** (batt) terminal. However, a faulty master relay R1 could eventually leave the battery power circuit closed, thus electrical power would be present at the starter **B** terminal.
2. Using a voltmeter or multimeter, probe the starter **B** terminal and the **ground** terminal. Make sure that the voltage reading is 0 volt prior disconnecting the starter cables (FIGURE 2).

STARTER REMOVAL

3. While proceeding from under the vehicle, gain access to the starter (item 29 on FIGURE 1) on the turbocharger side (street side).

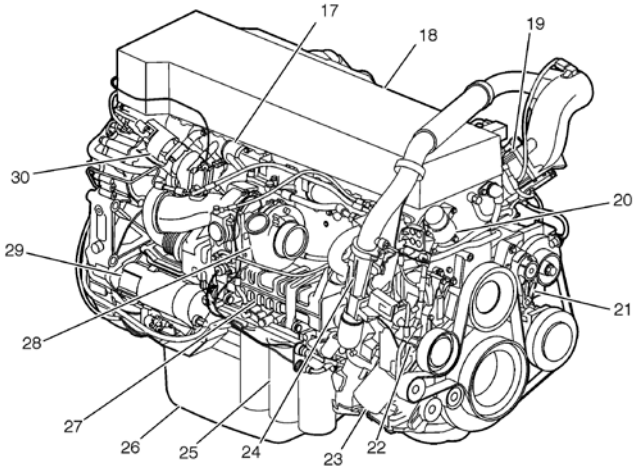

FIGURE 1: D13H ENGINE OVERVIEW, TURBO SIDE

4. On the starter, disconnect circuits **0C**, **101** and **101B** (see FIGURE 2). Properly clean cable lugs as applicable using a brass wire cup brush, a Scotch-Brite pad or an emery cloth. Remove old Color Guard Rubber Coating as much as possible.

   IMPORTANT: keep hardware for later use

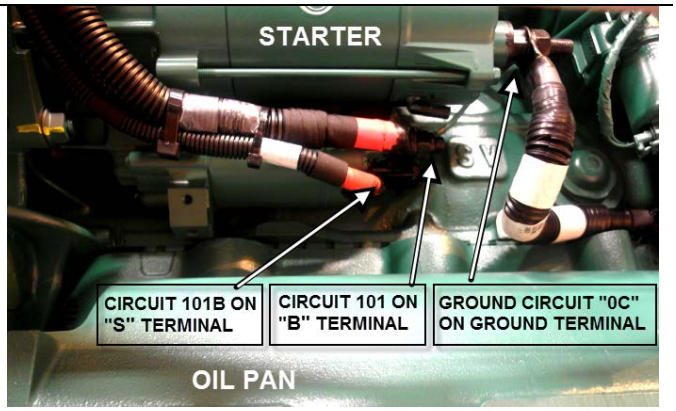

FIGURE 2

5. Using a 18mm socket, unscrew three bolts fastening the starter to the flywheel housing (FIGURE 3).
6. Detach the starter from the flywheel housing.

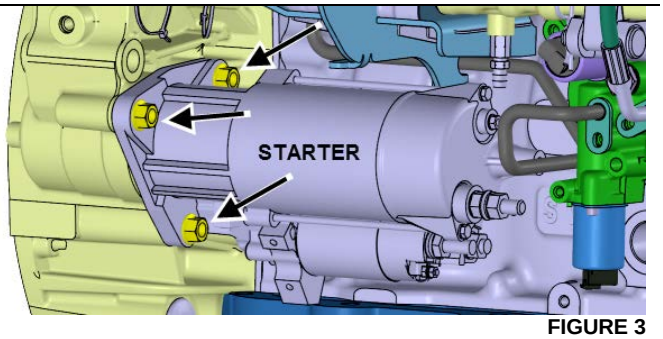

FIGURE 3

STARTER INSTALLATION

1. If the starter is replaced with a brand new starter, prepare the new starter as follows (refer to FIGURE 5).
   a) Remove the second nut on the ground terminal (FIGURE 5). Keep for later use.
   b) Remove the jumper cable connected to the ground terminal (FIGURE 5).
   c) Make sure that the three nuts identified on FIGURE 5 are tightened to a torque of **22 lbf-ft**.
   d) Reinstall the jumper cable to the ground terminal.
   e) Install a nylon tie mount p/n 504013 on the starter. Refer to FIGURE 6 for proper location. Secure the nylon tie mount with one screw *p/n 502817* (FIGURE 7).

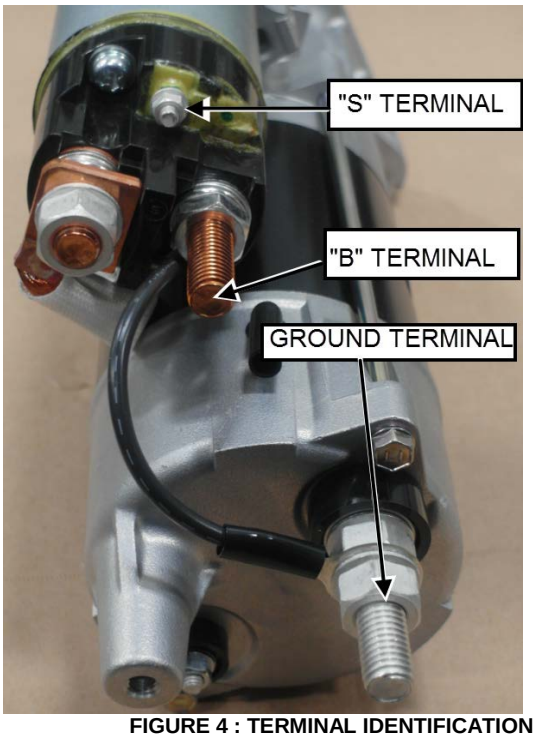

FIGURE 4 : TERMINAL IDENTIFICATION

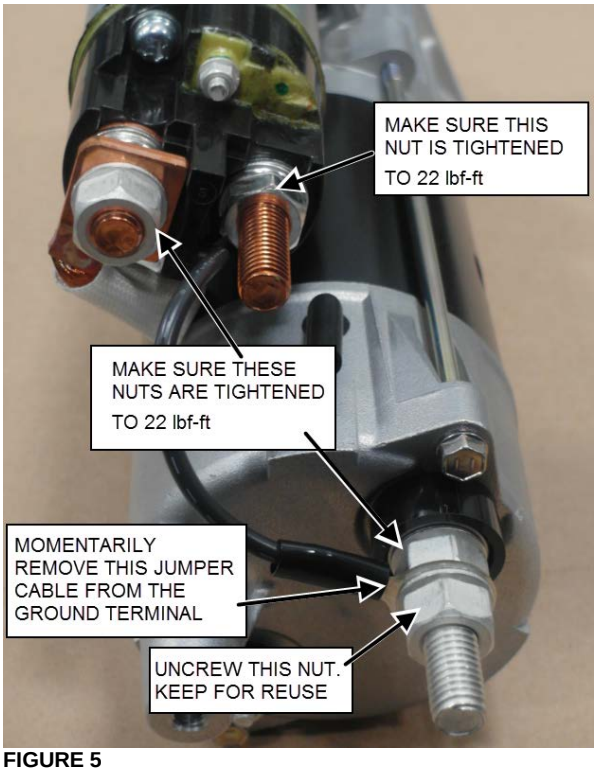

FIGURE 5

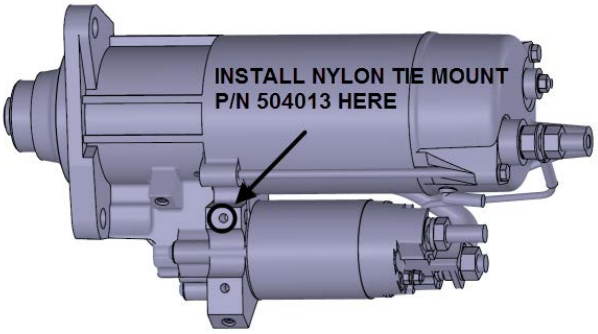

FIGURE 6

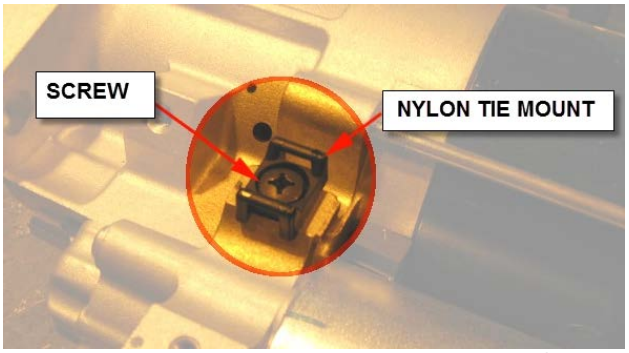

FIGURE 7

2. Install the replacement starter with the solenoid located on the underside of the starter motor as shown on **FIGURE 8**.
3. Hand tighten the three mounting nut.

   Flange nut M12 p/n 990942 qty: 3

4. Once the starter is properly seated on the flywheel housing, torque the three mounting nuts to al torque of **44 lbf-ft**.

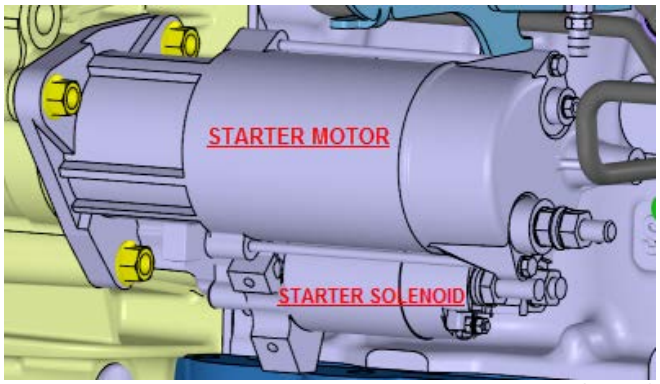

FIGURE 8

INSTALLATION OF CIRCUIT 0C

5. Connect the ground cable (circuit 0C) to the ground terminal first. Make sure the ground cable extends vertically downward from the terminal as shown on **FIGURE 9**.
6. Secure the ground cable lug with the nut previously removed at step 1-a. Tighten to a torque of **22 lbf-ft**.

   M12 hex nut p/n 983717

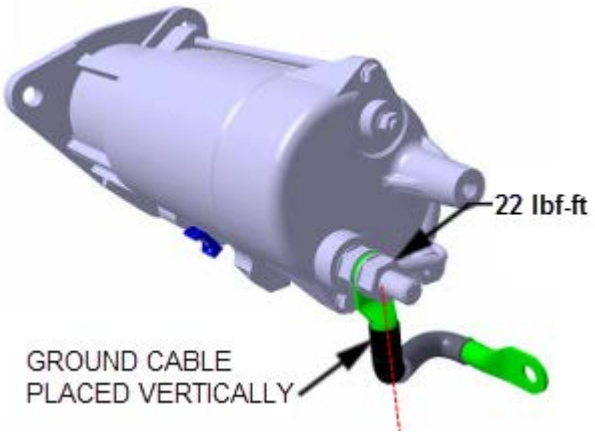

FIGURE 9

INSTALLATION OF CIRCUIT 101

7. Connect circuit **101** to **B** terminal (FIGURE 4 & FIGURE 5). Position circuit **101** cable to be in line with the nylon tie mount on the starter.
8. Place the washer against circuit **101** cable lug and secure cable lug and washer with the nut. Tighten the nut to a torque of **22 lbf-ft**.

   washer p/n 500958 qty:1

   nut p/n 5001761 qty:1

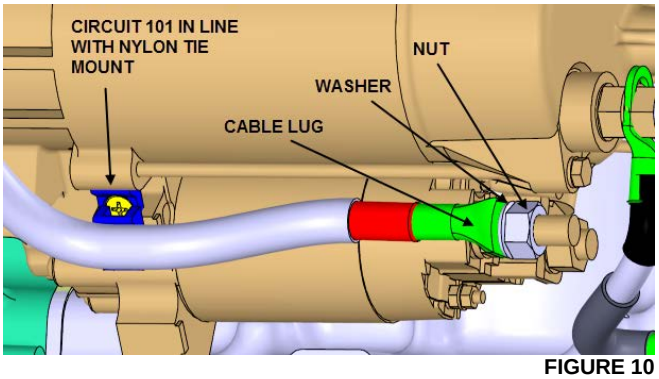

FIGURE 10

INSTALLATION OF CIRCUIT 101B

9. If not already done, remove the nut and washer provided with the brand new alternator on **S** terminal (FIGURE 4).
10. Connect circuit **101B** to **S** terminal. Position circuit **101B** cable to be in line with the nylon tie mount on the starter.
11. Place the provided washer against circuit **101** cable lug and then secure cable lug and washer with the nut provided. Tighten the nut to **35 lbf-in**.

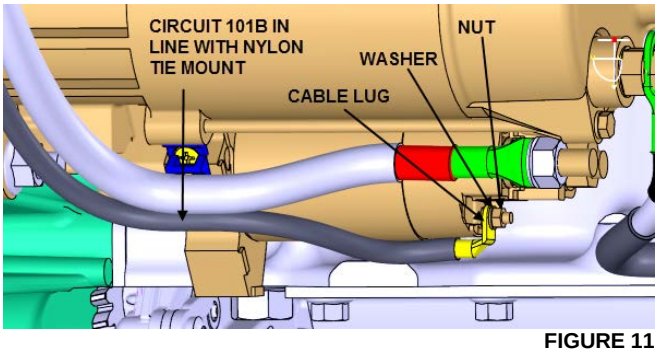

FIGURE 11

12. Secure circuit **101** and **101B** to the tie mount using one nylon tie *p/n 504016*.
13. Tie circuit **101** and **101B** together using one nylon tie *p/n 504637* as shown on FIGURE 12.

FIGURE 12

14. Apply anti-corrosion compound or **Color Guard Rubber Coating** (Prevost p/n 684013) on starter terminals, cable lugs and nuts (see FIGURE 13 to FIGURE 15).

FIGURE 13

FIGURE 14

FIGURE 15

FUNCTIONAL TEST

1. Reset main circuit breakers if applicable. Set the battery master switch (master cut-out) to the ON position and start the engine.

PARTS / WASTE DISPOSAL

Discard according to applicable environmental regulations (Municipal/State[Prov.]/ Federal)

Access all our Service Bulletins on https://secureus5.volvo.com/technicalpublications/en/pub.asp
Or scan the QR-Code with your smart phone.

*E-mail us at **technicalpublications_prev@volvo.com** and type "ADD" in the subject to receive our warranty bulletins by e-mail.*

CONTENTS

SECTION CHANGE LOG 2

1. TORQUE TABLES 3

1.1 FUEL SYSTEM 3
1.2 MISCELLANEOUS TORQUES 3

2. FUEL SYSTEM 4

2.1 FUEL VALVES 4
2.2 FUEL FILTERS 4
2.2.1 Primary Fuel Filter Replacement 5
2.2.2 Secondary Fuel Filter Replacement 7
2.3 PRIMING THE FUEL SYSTEM 7
2.4 DAVCO FUEL PRO 382 8
2.4.1 Priming fuel system 8
2.4.2 Filter replacement 8
2.5 FUEL PUMP REMOVAL AND INSTALLATION 9

3. FUEL LINES AND FLEXIBLE HOSES 10

4. PREHEATER FUEL FILTER 10

5. FUEL TANK 11

5.1 TANK REMOVAL 11
5.2 TANK INSTALLATION 12
5.3 FUEL TANK VERIFICATION 12
5.4 POLYETHYLENE FUEL TANK REPAIR 13

6. FUEL SPECIFICATIONS 13

6.1 FUEL TYPE 13
6.2 BLENDING 14
6.3 BIODIESEL FUELS 14
6.3.1 Biodiesel Fuels and Preheater 14
6.3.2 Biodiesel Fuels and the Engine 14

7. AIR CLEANER (DRY TYPE) 14

7.1 PRE-CLEANER SERVICING 15
7.2 AIR CLEANER SERVICING 15
7.2.1 Checking restriction indicator 15
7.2.2 Replacing the Filter 15
7.3 GENERAL RECOMMENDATIONS 16
7.4 AIR CLEANER RESTRICTION INDICATOR 17

8. FUEL PEDAL 17

8.1 FUEL PEDAL ADJUSTMENT 17
8.2 POTENTIOMETER REPLACEMENT 17

9. SPECIFICATIONS 19

SECTION CHANGE LOG

	DESCRIPTION	DATE
1	Added: information about specific fuel filters for GHG17 engines	Sept. 7, 2017
2		
3		
4		
5		
6		

1. TORQUE TABLES

1.1 FUEL SYSTEM

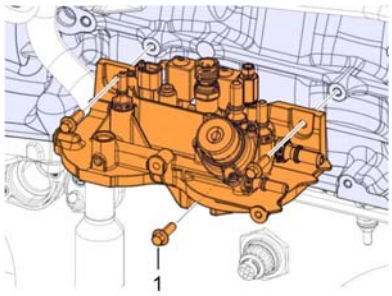

03100

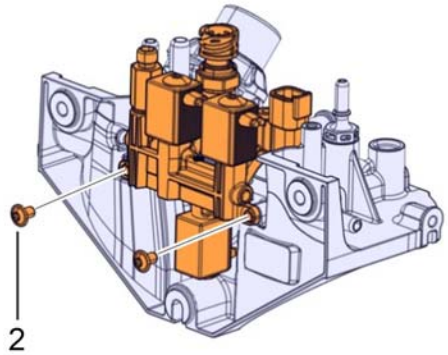

03101

FUEL FILTER HOUSING – VOLVO D13 ENGINE		
No	DESCRIPTION	TORQUE
1	Fuel filter housing assembly screws	15-21 lb-ft (20-28 Nm)
2	Dosing module mounting screws	7.5 lb-ft (10 Nm)

1.2 MISCELLANEOUS TORQUES

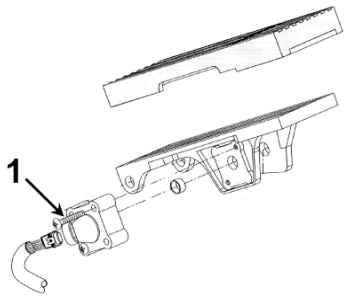

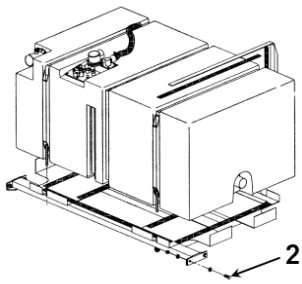

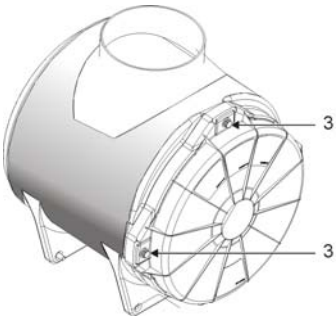

MISCELLANEOUS TORQUES		
No	DESCRIPTION	TORQUE
1	Brake pedal potentiometer holding screws	10-20 lb-in (1.13-2.26 Nm)
2	Fuel tank support to frame	55 lb-ft (75 Nm)
3	Air filter cover plastic screws (4)	10-15 lb-ft (14-20 Nm)

2. FUEL SYSTEM

NOTE
For additional information concerning Volvo D13 engine components or engine-related components, consult Volvo Trucks Canada or Volvo Trucks North America Web Site under: Parts & Service. On Volvo web site, you will find detailed service procedures for parts replacement, repair and maintenance.

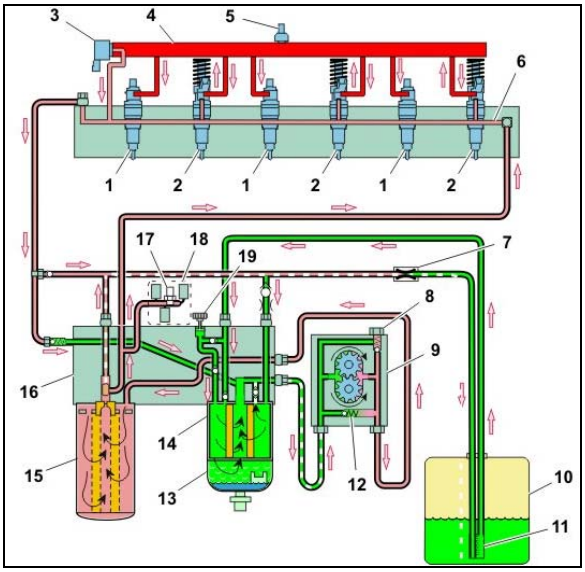

FIGURE 1: FUEL SYSTEM SCHEMATIC (VOLVO D13 ENGINE)

1 Non-pumping injector
2 Pumping injector
3 Fuel pressure relief valve
4 Common rail
5 Rail pressure sensor
6 Fuel channel (gallery)
7 Restrictor
8 Overpressure relief valve
9 Fuel pump
10 Fuel tank
12 Check valve
13 Bowl (fuel/water separator)
14 Primary Filter
15 Filter
16 Fuel filter housing
17 Fuel pressure sensor (low pressure system)
18 Aftertreatment hydrocarbon injector module
19 Hand pump (fuel primer pump)

2.1 FUEL VALVES

The manual shut-off valve is located on the inlet side of the primary fuel filter or on the inlet side of Davco Fuel Pro 382 fuel filter.

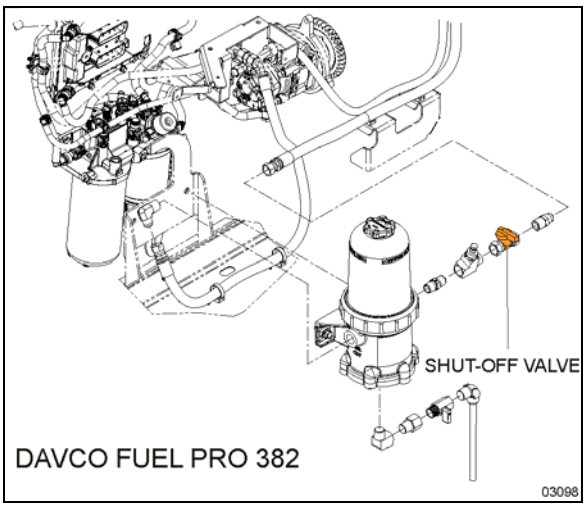

FIGURE 2: MANUAL SHUT-OFF VALVE LOCATION WITH DAVCO FUEL PRO 382

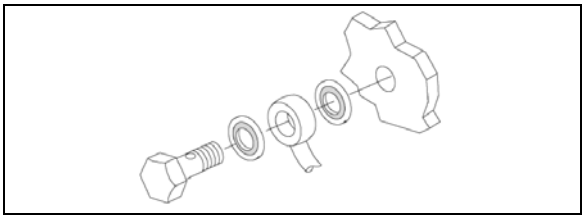

FIGURE 3: FUEL LINE COMPRESSION FITTING

⚠ **CAUTION**
ALWAYS replace the fuel line compression sealing washers when troubleshooting for fuel aeration or performing any service procedure that requires the removal of engine fuel lines.

2.2 FUEL FILTERS

A primary fuel filter is installed on the engine. This filter consists of a filter cartridge, a water separation bowl with a drain valve. It is used to prevent water from entering the fuel system.

MAINTENANCE

The primary and secondary (aka pre-filter and main filter) fuel filters are of a spin-on type and must be replaced at the intervals specified by the Lubrication And Servicing Schedule in Section 24: LUBRICATION & SERVICING.

The primary fuel filter should be drained periodically or when the telltale light on the dashboard illuminates if equipped with this system. To drain water, loosen the drain valve below the separator. Place an appropriate container under the filter. Close the drain valve when finished.

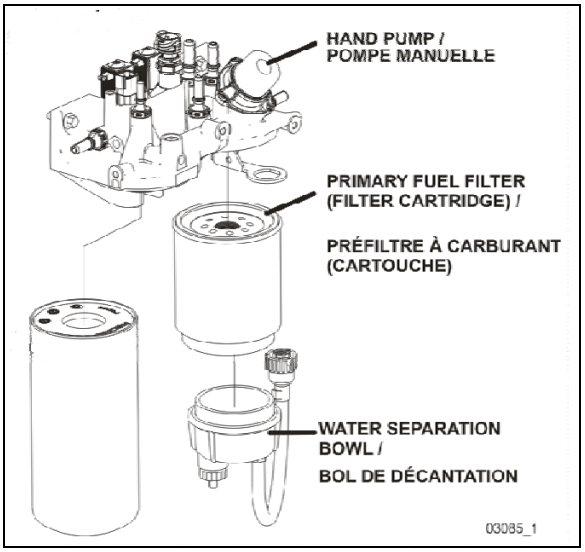

FIGURE 4: FUEL FILTERS WITH VOLVO D13 ENGINE

2.2.1 Primary Fuel Filter Replacement

1. Stop engine, close the fuel supply line shut-off valve.
2. Place an appropriate container under the fuel filter housing, then drain the water from the water separation bowl.
3. Disconnect the water separator indicator electrical connector.

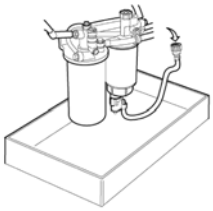

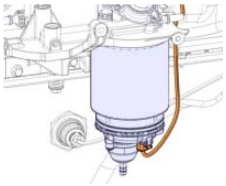

4. Unscrew and remove the primary fuel filter assembly from the fuel filter housing. Drain filter.

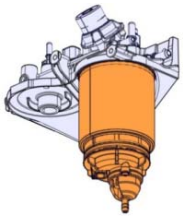

5. Unscrew and remove the water separation bowl from the filter cartridge.

6. Remove and discard the old gasket from the water separation bowl. Clean the bowl thoroughly and then blow dry with filtered compressed air.

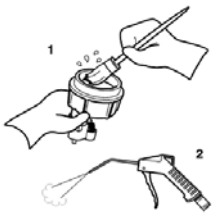

7. Check that the drainage hole in the water separator bowl is not blocked.

8. Apply clean engine oil to the water separation bowl new gasket. **Do not install pre-GHG17 fuel filters on GHG17 engines.**

9. Install the new filter to the bowl. Tighten the filter by hand. Do not overtighten.

10. Clean the contact surface and apply engine oil to the filter seals (inner & outer).

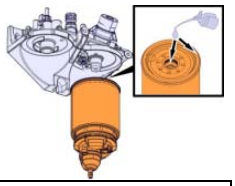

CAUTION

Fuel in the old filter **must absolutely not** be poured into the new filter. This kind of contaminated fuel can damage the unit injectors.

11. Tighten the new dry primary fuel filter to the fuel filter housing by hand. Rotate clockwise until the seal is tight against the housing. Then rotate clockwise another 1/2-3/4 turn.

    If the fuel filter is being replaced at this time, proceed to "Secondary Fuel Filter Replacement".

12. Plug the connector.

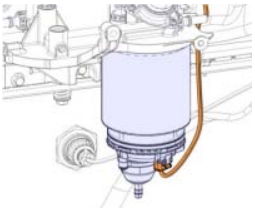

13. Open the fuel supply line shut-off valve.
14. Prime the system by operating hand primer pump until resistance is felt indicating that the system is full of fuel.
15. Start the engine and carry out a fuel-tightness check. Let the engine run for about 5 minutes to remove air pockets from the fuel system.

CAUTION

Primary & secondary fuel filters on GHG17 engines

Do not install pre-GHG17 fuel filters on GHG17 engines.

Although the thread pitch is the same, these filters do not fit and may cause serious issues with the fuel system.

Refer to Impact for the appropriate fuel filters part numbers.

ALUMINUM PARTICLES ON THE FILTER RESTRICTOR (FUEL FILTER HOUSING)

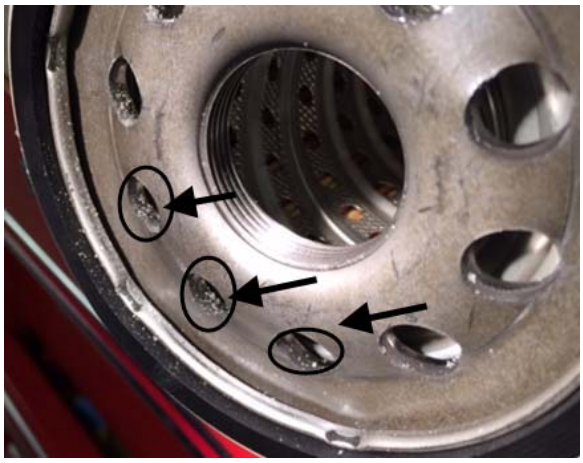

ALUMINUM PARTICLES FOUND ON A PRE-GHG17 FILTER CAUSED BY GRINDING OF THE TOP OF THE FILTER INTO THE FILTER RESTRICTOR

Difference between secondary fuel filter end caps

PRE-GHG17 END CAP DESIGN

GHG17 END CAP DESIGN WITH DEEP GROOVE

2.2.2 Secondary Fuel Filter Replacement

1. Stop engine, close the fuel supply line shut-off valve. Place an appropriate container under the fuel filter housing.
2. Clean around sealing area on fuel filter and housing.
3. Unscrew and remove the secondary fuel filter from the fuel filter housing.

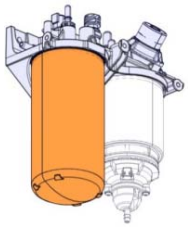

4. On the new filter, apply clean engine oil to the inner & outer seals. **Do not install pre-GHG17 fuel filters on GHG17 engines.**

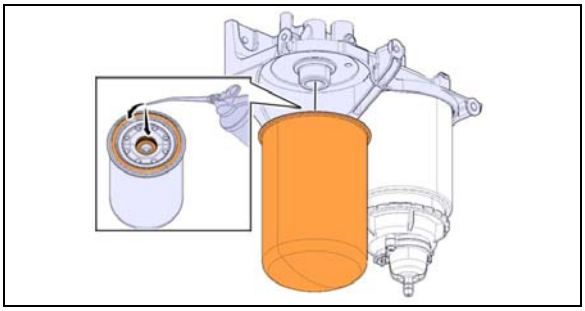

FIGURE 5: SECONDARY FUEL FILTER

5. Screw the new dry fuel filter in place. Rotate clockwise until the seal contacts the base. Then rotate clockwise another 1/2 - 3/4 turn.

CAUTION

Fuel in the old filter **must absolutely not** be poured into the new filter. This kind of contaminated fuel can damage the unit injectors.

6. Prime the fuel system by pumping the hand priming pump on the fuel filter housing until resistance is felt indicating that the system is full of fuel.
7. Start the engine and carry out a fuel-tightness check. Let the engine run for about 5 minutes to remove air pockets from the fuel system.

2.3 PRIMING THE FUEL SYSTEM

The fuel system will need to be bled if:

- The vehicle has run out of fuel.
- The engine has not been running for an extended period of time.
- Service work has been done on the fuel system, (tank, fuel lines, filters, valves, etc.) for example cleaning or replacing fuel filter cartridges.
- The engine is new or rebuilt.

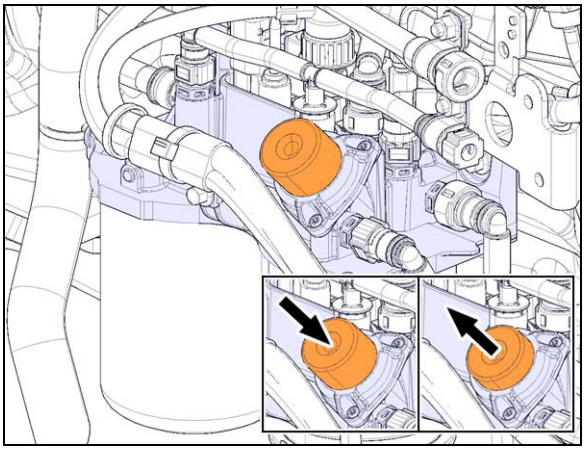

FIGURE 6: HAND PRIMING PUMP

NOTE

When the fuel system is empty, 200 or more pump strokes may be needed to properly prime system. There are no bleed nipples to be opened to prime the fuel system.

If a Fuel Pro 382 fuel processor is installed on the vehicle, refer to paragraph 2.4 Davco Fuel Pro 382 otherwise, perform the steps below:

1. Prime filter by operating hand primer pump until resistance is felt indicating that the system is full of fuel.
2. Start the engine and run it at an increased idle speed for approximately 5 minutes to remove any remaining air in the system. Check the fuel system for leaks.

2.4 DAVCO FUEL PRO 382

The optional Fuel Pro 382 fuel processor is installed between the fuel tank and the fuel pump. This system serves as a water separator as well as a fuel filter (Figure 7).

The filter fibers used in the Davco Fuel Pro 382 element may cause the fuel level to read artificially high when the filter is first installed. Over the first few days, the filter fibers eventually become fully saturated and the fuel level will drop to normal levels. Do not be concerned about an abnormally high fuel level when a new Davco element is installed.

Fuel level rises as dirt collects on the filter from the bottom up. Restriction remains consistently low because fuel always flows through clean, new media.

MAINTENANCE

Replace Fuel Pro 382 filter element when the fuel level in the see-thru filter cover reaches the top of the filter element.

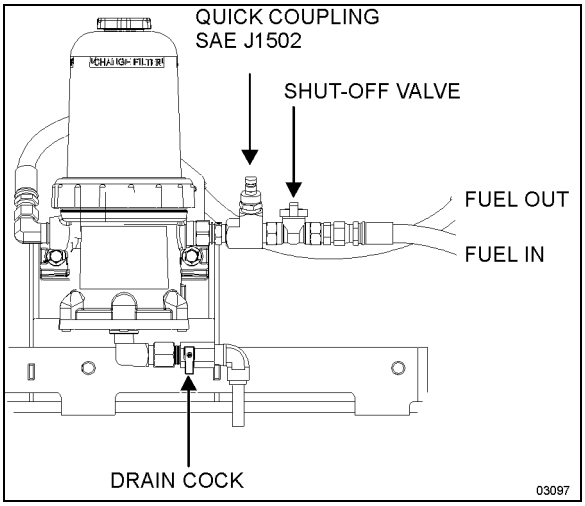

FIGURE 7: DAVCO FUEL PRO 382 INSTALLATION

2.4.1 Priming fuel system

To prime the fuel system, turn the engine off and then proceed as follows:

Close the shut-off valve on the “fuel in” side of the Fuel Pro unit and then pump fuel into the engine through the quick coupling. When completed, open the shut-off valve and keep on pumping fuel about ten seconds to fill the fuel line located between the Fuel Pro unit and the fuel tank.

2.4.2 Filter replacement

1. Stop engine;
2. Place a suitable container under the fuel processor;
3. Close the shut-off valve on the “fuel in” side of the fuel filter;
4. Open the drain valve at the base of the Fuel Pro body and drain the fuel until it is below the collar level;
5. Untighten the collar, remove clear cover, filter spring, filter element and cover seal;
6. Dispose of used filter element, cover seal and vent cap seal;
7. Using a clean shop rag, clean the cover, the collar and threads on the Fuel Pro body.
8. Ensure the filter grommet is included in the base of the new filter element and then install the element onto the center stud;

9. Ensure the filter spring is installed at the top of the clear cover. If missing, the spring must be replaced to insure proper filter operation.
10. After ensuring the seal is properly positioned at the base of the clear cover, install it with the collar onto the fuel processor. Apply downward pressure to the top of the clear cover and then tighten the collar by hand until secured;
11. Fill the clear cover with clean diesel fuel until it reaches the top of the filter through spin off vent cap located on top of clear cover.
12. Install vent cap seal and then reinstall the cap and tighten by hand until it clicks;
13. Open the shut-off valve;
14. Start engine, raise rpm for 2-3 minutes, hand tighten collar again.
15. After the air is purged and with the engine still running, slowly loosen the vent cap on the filter cover. The fuel level in the cover will start falling. When the fuel level falls to about one inch above the top of the collar, tighten the vent cap quickly by hand.
16. Shut down the engine and hand-tighten the collar again.

ENVIRONMENTAL NOTICE
Diesel fuel is an environmentally hazardous product. Dispose in an environmentally friendly manner.

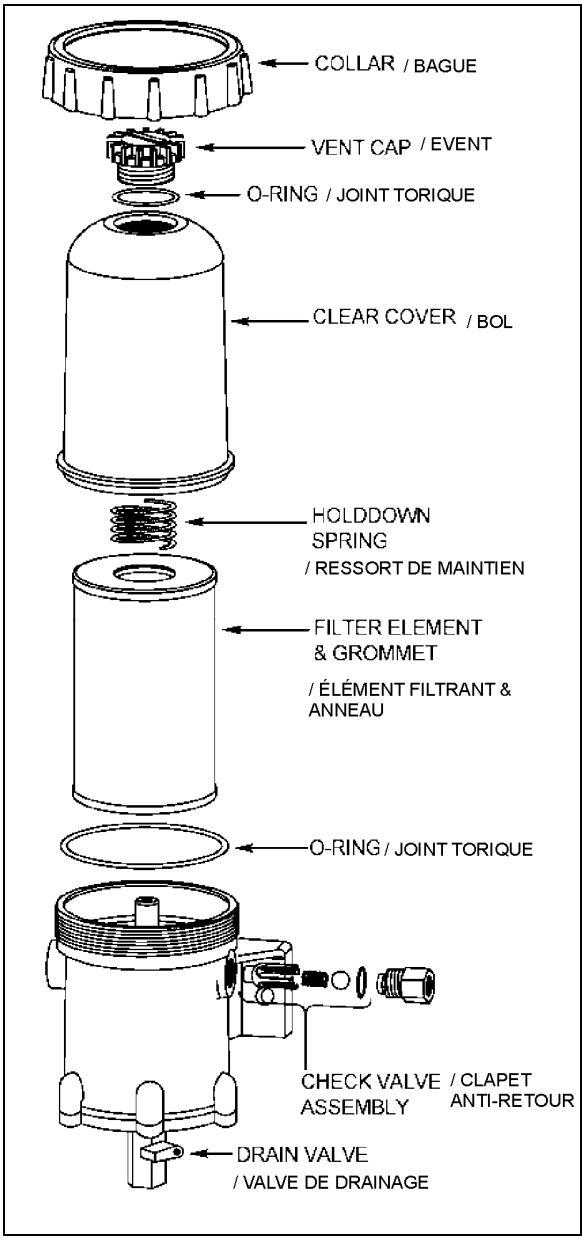

FIGURE 8: DAVCO FUEL PRO 382 EXPLODED VIEW

03076

2.5 FUEL PUMP REMOVAL AND INSTALLATION

The pump is located underneath the air compressor and is accessible through the engine compartment R.H. access door.

To remove the pump, proceed as follows:

- Clean around the fuel pump and fuel lines. Position a container to catch any fuel that might drain from the pump or lines.

- Remove the fuel pump.

NOTE
Only unfasten the bolts marked with arrows.

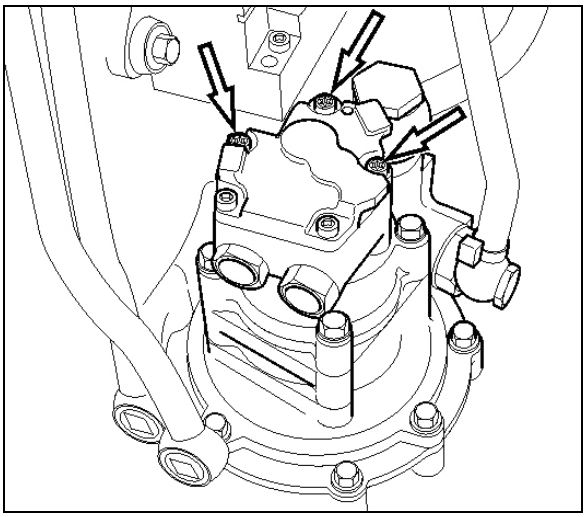

FIGURE 9: FUEL PUMP REMOVAL

CAUTION
Ensure to clean around the head of the bolts. Debris will prevent the tool from fitting properly and cause damage to the fasteners.

- Check that the adapter and fuel pump drive axle are not damaged.
- Install the fuel pump. Torque-tighten bolts to specification.

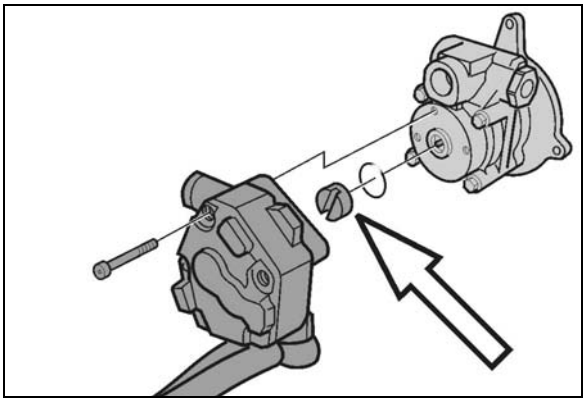

FIGURE 10: FUEL PUMP DRIVE AXLE

NOTE
Use a new sealing ring. Check that the fuel pump drive axle sits correctly in the power steering pump.

- Using the hand primer on the fuel filter housing, prime the fuel system.
- Start the engine and let run for 5 minutes. Make sure that there are no leaks.

3. FUEL LINES AND FLEXIBLE HOSES

Make a visual check for fuel leaks at all engine-mounted fuel lines and connections and at the fuel tank suction and return lines. Since fuel tanks are susceptible to road hazards, leaks in this area may best be detected by checking for accumulation of fuel under the tank. Engine performance and auxiliary equipment is greatly dependent on the ability of flexible hoses to transfer lubricating oil, air, coolant and fuel oil. Diligent maintenance of hoses is an important step in ensuring efficient, economical and safe operation of engine and related equipment.

MAINTENANCE
Check hoses daily as part of the pre-start-up inspection. Examine hoses for leaks and check all fittings, clamps and ties carefully. Make sure that the hoses are not resting on or touching shafts, couplings, and heated surfaces, including exhaust manifolds, any sharp edges or other obviously hazardous areas.

Since all machinery vibrates and moves to a certain extent, clamps and ties can fatigue with age. To ensure continued proper support, inspect fasteners frequently and tighten or replace them as necessary. Refer to the schematic diagram of the fuel system (Figure 1).

CAUTION
Oil level above the dipstick full mark or a decrease in lube oil consumption may indicate internal fuel leaks. Check oil level frequently.

4. PREHEATER FUEL FILTER

On H3 series vehicles, the preheater fuel filter is located beside the preheater in the dedicated compartment above the rear wheelhousing, on the L.H. side of vehicle.

On X3 series vehicles, the preheater fuel filter is located beside the preheater in the engine coolant heater compartment, and is accessible by opening the evaporator compartment door.

MAINTENANCE

Replace preheater fuel filter at the intervals specified by the Lubrication And Servicing Schedule in Section 24: LUBRICATION & SERVICING.

5. FUEL TANK

All H3 series vehicles are equipped with a high-density cross-link polyethylene fuel tank with a legal capacity (corresponding to 95% of gross capacity) of 222 US gallons / 840 liters. The tank is located just forward of the last baggage compartment, between the A/C condenser and evaporator. Fuel filling access doors on both sides of vehicle provide direct access to filler necks; offering the added advantage of refueling from either side of vehicle.

X3 series are equipped with a high-density cross-link polyethylene fuel tank with a legal capacity (corresponding to 95% of gross capacity) of 208 US gallons (787 liters). The fuel filling access door is located on the R.H. side of vehicle providing easy fuel filling.

A pressure relief valve on the fuel tank connection-panel relieves high-pressure buildup and an overflow tube allows offset air in the tank to escape during filling. For 95% of the tank volume, 5% of tank inside space is kept filled with air with no exit opening, allowing for a fuel expansion safety margin. A drain plug, accessible from under the vehicle, is fitted at the bottom of the tank.

5.1 TANK REMOVAL

WARNING

Park vehicle safely, apply parking brake, stop engine and set battery master switch(es) to the OFF position before working on the vehicle.

Before working under an air-suspended vehicle, it is strongly recommended to support the body at the recommended jacking points.

NOTE

Before removal, the fuel tank should be completely drained by unscrewing the drain plug. Ensure that the container used has a capacity equal to the amount of fuel remaining in the tank.

1. Open the condenser door and remove the fuel tank access panel. The rear baggage compartment fuel tank access panel may also be removed to facilitate access to components.
2. On H3 series vehicles only, unscrew clamps retaining L.H. side filler tube to the fuel tank, then disconnect tube and remove it.
3. Unscrew clamps retaining R.H. side filler tube to fuel tank and filler neck. Disconnect tube and remove it.
4. If applicable, unscrew preheater supply line, preheater return line, auxiliary return line and/or auxiliary return line from fuel tank connection-panel.
5. Unscrew engine supply and return lines from fuel tank connection-panel, identify them for reinstallation.
6. Disconnect electrical wiring from tank on connection plate.

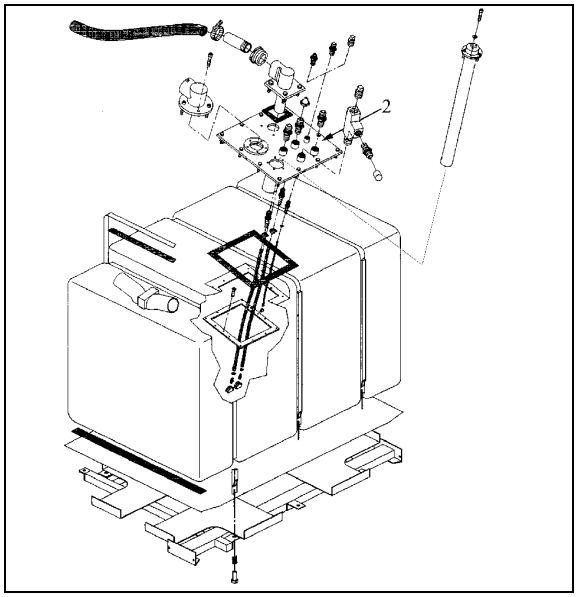

FIGURE 11: 222 US GALLONS FUEL TANK 03048

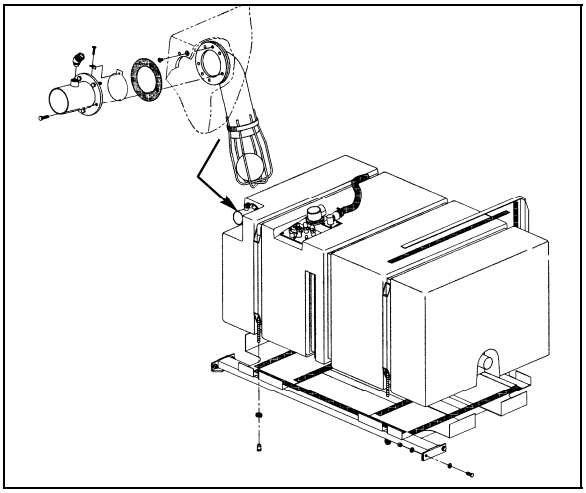

FIGURE 12: 208 US GALLONS FUEL TANK 03094

WARNING

Before removing the bolts securing the tank support to the frame, make sure the tank is supported adequately. Failure to do so could result in injury as well as damage to the tank.

7. From under the vehicle, on R.H. side, unscrew the 4 bolts (2 in front, 2 in back) retaining the tank support to the frame.
8. From under the vehicle, on the L.H. side, unscrew the 2 bolts (1 in front, 1 in back) retaining the tank support to the frame.
9. Carefully remove tank from under the vehicle.

5.2 TANK INSTALLATION

Tank installation is the reverse of removal.

NOTE

Fastening of rubber flap must always be on top, in line with clamp screw.

NOTE

Insert check valve assembly in right-side filler hose, use hose clamp to fix it. Repeat with left side filler hose on H3 series vehicles.

NOTE

When reinstalling lines, use Loctite 567 type thread sealant on line fittings.

WARNING

For proper assembly, check connections and fasteners for tightness.

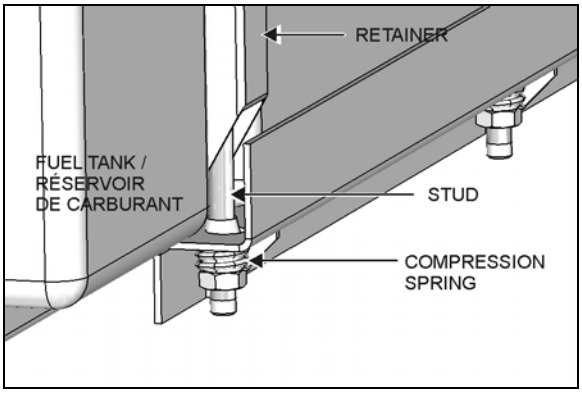

FIGURE 13: **FUEL TANK RETENTION** 03019_2

For each fuel tank retainers (Figure 13):

1. Clean nuts and stud threads.
2. Apply a Loctite 242 type thread adhesive on stud threads.
3. Fix the retainers to the tank platform. Tighten the nuts to compress the spring completely and then loosen 3 turns.
4. Lift tank assembly and fasten tank support to vehicle.

TORQUE: 55 lb-ft (75 Nm)

5.3 FUEL TANK VERIFICATION

Inspect fuel tank from under vehicle for leaks or fuel traces. If a leak is detected, repair immediately as per "Polyethylene Fuel Tank Repair" in this section.

WARNING

Park vehicle safely, apply parking brake, stop engine and set battery master switch(es) to the OFF position before working on the vehicle.

Before working under an air-suspended vehicle, it is strongly recommended to support the body at the recommended jacking points.

5.4 POLYETHYLENE FUEL TANK REPAIR

NOTE

Fuel level must be lower than perforation to carry out this procedure.

WARNING

Park vehicle safely, apply parking brake, stop engine and set battery master switches to the OFF position before working on the vehicle.

1. Locate perforation on fuel tank.
2. If necessary, remove fuel tank as per instructions in this section.
3. Drill perforation with a 23/64" bit. Make sure drill hole is perfectly round.
4. Insert a screw (Prevost #500196) and a washer (Prevost #5001244) into anchor nut (Prevost #500331).
5. Place assembly in drilled hole. Tighten screw by 10 complete turns. Refer to Figure 14.
6. Apply sealant on head plug (Prevost #507300) and seal hole with the head plug.

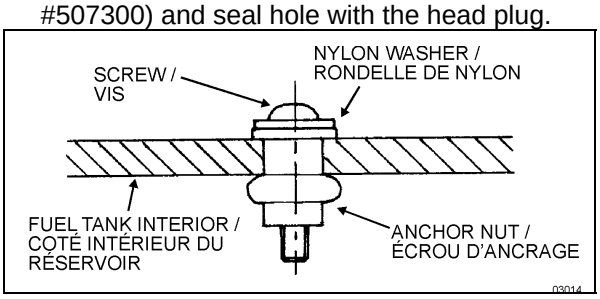

FIGURE 14: FUEL TANK REPAIR **03014**

6. FUEL SPECIFICATIONS

The quality of fuel used for high-speed diesel engine operation is a very important factor in obtaining satisfactory engine performance, long engine life and acceptable exhaust emission levels.

The U.S. Environmental Protection Agency (EPA) has issued new standards to improve air quality by significantly reducing emissions through a combination of cleaner-burning diesel engines and vehicles.

To meet EPA standards, the petroleum industry produces **Ultra Low Sulfur Diesel** (ULSD) fuel, also referred to as S15, containing a maximum of 15ppm (parts-per-million) sulfur.

On-highway diesel engines meeting 2010 emission regulations are designed to operate **ONLY** with ULSD fuel. ULSD fuel will enable the use of cleaner technology diesel engines and vehicles with advanced emissions control devices, resulting in significantly improved air quality.

6.1 FUEL TYPE

EPA-10 and later engines like the Volvo D13 are designed to run on **Ultra Low Sulfur Diesel** (ULSD) fuel, which can contain no more than 15 ppm sulfur.

Fuel used must meet engine manufacturer's specification. Refer to Volvo engine specifications.

CAUTION

ULSD fuel is necessary to avoid fouling the engine's Exhaust Aftertreatment System. Improper fuel use will reduce the efficiency of the engine's Aftertreatment System and may permanently damage the system.

CAUTION

Owners of 2010 and later model year on-highway diesel engine must refuel only with ULSD fuel.

NOTE

Burning Low Sulfur Diesel fuel (instead of ULSD fuel) in 2010 and later model year diesel engines is illegal and punishable with civil penalties.

NOTE

Engine and vehicle manufacturers expect ULSD fuel to be fully compatible with the existing fleet, including 2006 and earlier model year vehicles. In some instances, the introduction of ULSD fuel to older vehicles may affect fuel system components or loosen deposits in fuel tanks. As part of a good maintenance program, owners and operators of existing cars, trucks and buses are encouraged to monitor their diesel-powered vehicles closely for potential fuel system leaks or premature fuel filter plugging during the change-over to ULSD fuel.

NOTE

Like Low Sulfur Diesel fuel, ULSD fuel requires good lubricity and corrosion inhibitors to prevent unacceptable engine wear. As necessary, additives to increase lubricity and to inhibit corrosion will be added to ULSD fuel ***prior*** *to its retail sale.*

6.2 BLENDING

Only ultra low sulfur kerosene – No.1 diesel with no more than 15ppm sulfur may be blended with ULSD fuel to improve cold weather performance. With so many kerosene formulations on the market, care must be taken to select kerosene with a maximum of 15ppm sulfur.

Blend rates remain the same as with Low Sulfur Diesel fuel.

6.3 BIODIESEL FUELS

Biodiesel up to a maximum of 20% blend (B20) may be used and will not affect the manufacturers' mechanical warranty as to engine and emissions system related components, provided the biofuel used in the blend conforms to ASTM D6751, B1 to B5 blends conform to ASTM D975, and B6 to B20 blends conform to ASTM D7467. Also, any engine performance problem related to the use of biodiesel fuel would not be recognized nor considered as Volvo or Prevost's responsibility.

However, Volvo engines are certified to comply with U.S. EPA and California emissions standards based upon the use of *test fuels* with specifications established by these regulatory agencies.

Alternative fuels, including biodiesel, that are not substantially similar to the required *test fuels* may adversely affect engine emissions compliance. As a result, Volvo does not warrant the engine will conform to applicable Federal or California emissions limits when operated on biodiesel or other alternative fuels that are not substantially similar to specified test fuels used for certification.

Additional maintenance care must be carried-out for the following systems:

6.3.1 Biodiesel Fuels and Preheater

For operation of the preheater with biodiesel, a retrofit is mandatory. Refer to the guidelines outlined in the last version of the Spheros Workshop Manual for Thermo 230, 300, 350, available on the Technical Publications USB flash drive and on Prevost technical publications website.

6.3.2 Biodiesel Fuels and the Engine

Use an oil sampling method to establish the appropriate oil drain interval for your application.

Fuel filter change intervals should be analyzed and adjusted accordingly.

7. AIR CLEANER (DRY TYPE)

The vehicle is equipped with a dry-type replaceable element air cleaner, located in the engine compartment. Access the air cleaner through the engine R.H. side door. Engine air enters the air cleaner through an intake duct on the R.H. side of the rear cap, next to the last window. It then flows through a pre-cleaner and finally through the air cleaner. The pre-cleaner removes dust and moisture by means of a discharge tube at the bottom of the element. It is in series with a replaceable impregnated paper filter element (air cleaner).

7.1 PRE-CLEANER SERVICING

MAINTENANCE

The pre-cleaner is designed to be self-cleaning; however, it should be inspected and any accumulated foreign material removed during the periodic replacement of the impregnated paper filter element.

7.2 AIR CLEANER SERVICING

Replacing the air filter cartridge is important to preserve a good air quality at a sufficient level. Neglecting this servicing could lead to an efficiency loss and eventual engine problems. Follow these steps to replace the filter cartridge:

7.2.1 Checking restriction indicator

Locate the restriction gage in the engine compartment, at the back of the vehicle. Consisting of a black tube, it is fixed on the main intake hose.

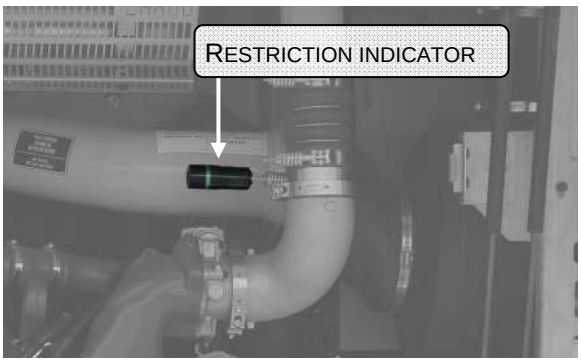

FIGURE 15 RESTRICTION INDICATOR LOCATION

Indication of a need to replace the filter will be apparent once its line turns red. Proper operation will be indicated by a green line. Consult the servicing schedule for time intervals between each regular filter change.

7.2.2 Replacing the Filter

- Remove the four filter cover plastic bolts. The filter itself can be removed by pulling it with gentle movements from left to right and up/down. A residual suction may occur, creating additional resistance.
- Empty the drain rubber valve located under the filter housing; if damaged this part can be ordered and changed.

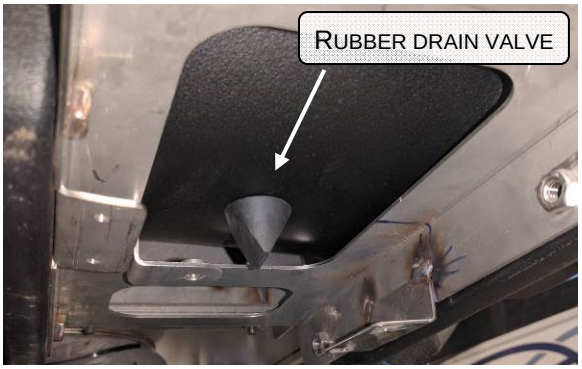

FIGURE 16

- Using a clean damp cloth, wipe the sealing flange and the inside of the outlet tube.

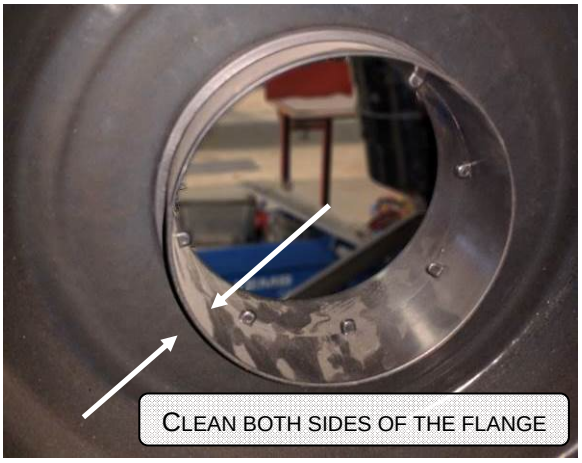

FIGURE 17

- Look for traces of dirt and particles on the outer surface of the old filter, indicating possible leakage. If so, the leakage cause should be investigated and solved.
- Unbox the new filter, inspect the inner sealing surface for potential non-conformities; Do not wipe the surface as it is factory sprayed with a dry lubricant for an easier mounting.

Insert new filter by gently pushing it inside the filter housing.

CAUTION

Avoid pushing it by its center; use both hands and push on its outer rim until it is well seated. (It should be exceeding the housing by around 2-1/2 inches as shown)

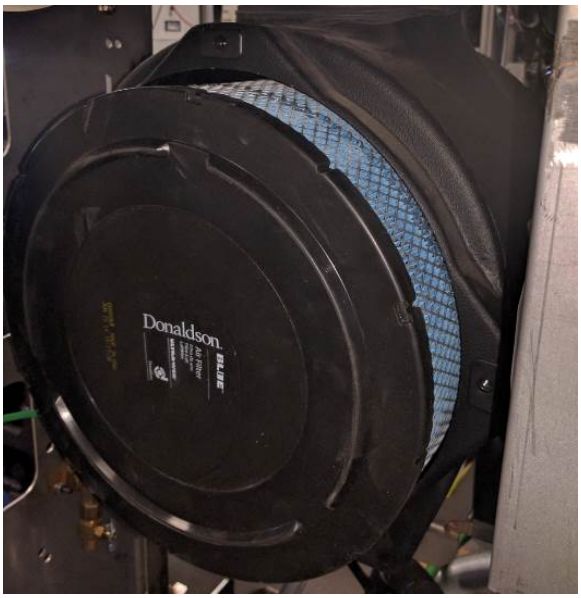

FIGURE 18

- Replace the filter cover and tighten the 4 plastic bolts using recommended torque settings (as displayed on filter cover).

TORQUE: 10-15 lb-ft (14-20 Nm)

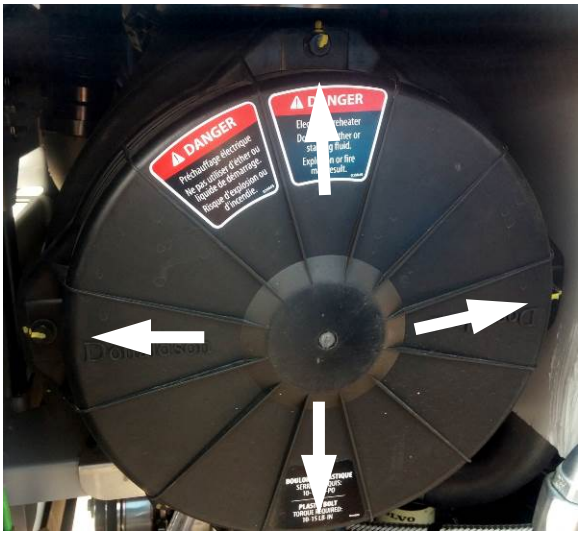

FIGURE 19

WARNING: The cover is not supposed to apply pressure on the filter. If so, the filter needs to be pushed further in the housing.

- Reset the restriction gage by pushing on the right-hand side button.

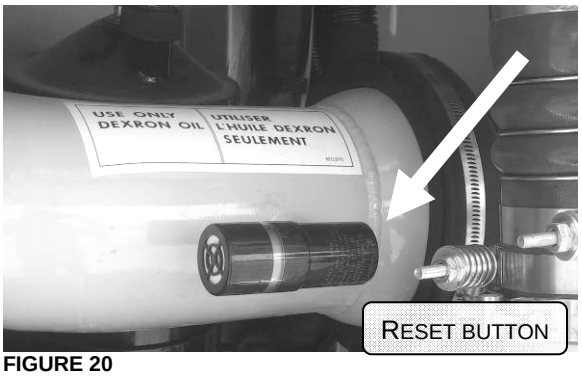

FIGURE 20

7.3 GENERAL RECOMMENDATIONS

The following maintenance procedures will ensure efficient air cleaner operation:

1. Keep the air cleaner housing tight on the air intake pipe;
2. Make sure the correct filters are used for replacement;
3. Keep the air cleaner properly assembled so the joints are air-tight;
4. Immediately repair any damage to the air cleaner or related parts;
5. Inspect, clean or replace the air cleaner or elements as operating conditions warrant. Whenever an element has been removed from the air cleaner housing the inside surface of the housing must be cleaned with a soft clean cloth;
6. Periodically inspect the entire system. Dust-laden air can pass through an almost invisible crack or opening which may eventually cause damage to an engine;
7. Never operate the engine without an element in the air cleaner assembly;

CAUTION

Do not ignore the Warning given by the air restriction indicator. This could result in serious engine damage.

8. Store new elements in a closed area free from dust and possible damage.

7.4 AIR CLEANER RESTRICTION INDICATOR

A resettable restriction indicator may be installed on the engine air-intake duct, clearly visible from the rear engine compartment. The indicator monitors the vacuum level between the air cleaner and the engine. A red marker is displayed when the air cleaner is clogged and must be replaced. Reset by pressing on the indicator's extremity.

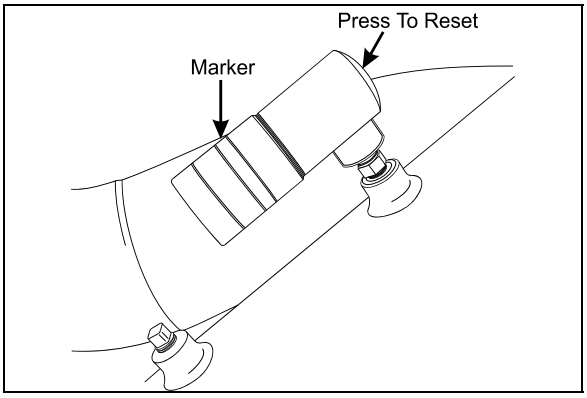

FIGURE 21: RESTRICTION INDICATOR 01052

MAINTENANCE

Air cleaner

Change the filter element when indicated by the restriction indicator or at the intervals specified by the Lubrication And Servicing Schedule in Section 24: LUBRICATION & SERVICING.

8. FUEL PEDAL

The EFPA (Electronic Foot Pedal Assembly) connects the accelerator pedal to a potentiometer (a device that sends an electrical signal to the ECM, which varies in voltage, depending on how far down the pedal is depressed). The EFPA is installed in the space normally occupied by a mechanical foot pedal. It has maximum and minimum stops that are built into the unit during manufacturing.

8.1 FUEL PEDAL ADJUSTMENT

The EFPA contains a throttle position sensor that varies the electrical signal sent to the ECM. The sensor must be adjusted whenever an EFPA is serviced. In addition, the sensor should be adjusted any time codes 21 and 22 are flashed.

With the ignition "ON" and the proper diagnostic tool (DDR) (for information regarding the DDR, see *"01 ENGINE"* in this manual), check the throttle counts at idle and full throttle positions. Proper pedal output should be 20/30 counts at idle and 200/235 at full throttle. If adjustment is necessary, remove the potentiometer retaining screws and rotate the potentiometer clockwise to increase counts or counterclockwise to decrease. When correct output is confirmed, tighten retaining screws.

8.2 POTENTIOMETER REPLACEMENT

1. Disconnect cable harness connector.
2. Loosen the two screws and remove potentiometer. Retain for re-assembly.
3. Discard potentiometer (Figure 22).

CAUTION

Note the routing and clamping locations of the cable before disassembly. Proper cable routing and fastening is critical to the operation of this system.

4. Position new potentiometer. Press potentiometer onto the potentiometer shaft, matching cutouts in shaft to drive tangs of potentiometer. Apply hand pressure until potentiometer has bottomed out in housing. Reinstall screws (Figure 22) and tighten just enough to secure potentiometer lightly.

TORQUE: 10-20 lb-in (1.13-2.26 Nm)

5. Reconnect electronic foot pedal assembly's cable harness to the ECM connector. If potentiometer calibration is necessary (see *"FUEL PEDAL ADJUSTMENT"* in this section).

CAUTION

Make sure the cable harness is routed correctly, and securely installed so that it does not become pinched, stretched, or otherwise damaged during vehicle operation.

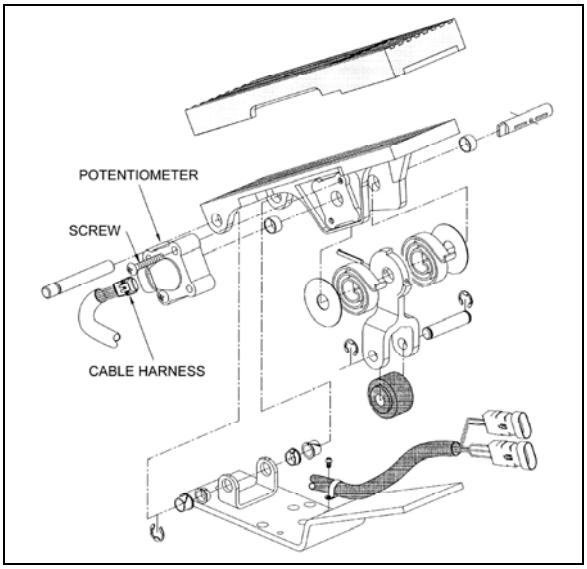

FIGURE 22: ELECTRONIC FOOT PEDAL ASSEMBLY 03035

9. SPECIFICATIONS

Davco Fuel Pro 382 Fuel Filter / Water Separator Element

Max Fuel Flow ..... 180 US gal/h (681 l/h)
Water removal @ 25 microns 99.6%
Dirt holding capacity @ 25 microns ..... 110 g

Primary Fuel Filter (Fuel/Water Separator)

Filter type ..... Spin-on cartridge
Filter drain interval ..... Dashboard telltale light warning
Filter torque ..... ½-3/4 turn after gasket contact

Secondary Fuel Filter (Main)

Filter type ..... Spin-on cartridge
Filter torque ..... ¾- 1 turn after gasket contact

Fuel tank Capacity

H3 series vehicles ..... 222 US gallons (840 liters)
X3 series vehicles ..... 208 US gallons (787 liters)

Air Cleaner

Filter type ..... Dry-type replaceable element
Filter change interval ..... Red marker on restriction indicator

Preheater Fuel Filter

Heater type ..... Thermo 300 High pressure atomizer
Heater power ..... 104000 btu/h
Pump flow ..... 1.05 US gal/h (4 l/h)

CONTENTS

1. TORQUE TABLES 2

1.1 X3 SERIES 2
1.2 H3 SERIES 4
1.3 MISCELLANEOUS TORQUES 7

2. EXHAUST AFTERTREATMENT SYSTEM OVERVIEW 8

2.1 MAINTENANCE 8
2.2 FLEXIBLE COUPLING INSTALLATION 9

3. DIESEL PARTICULATE FILTER (DPF) 9

3.1 DIESEL PARTICULATE FILTER ASSEMBLY REMOVAL 10

4. CATALYTIC CONVERTER 11

4.1 REMOVAL 12
4.2 ASSEMBLING CATALYTIC CONVERTER 13

5. DIFFUSER ASSEMBLY 15

5.1 DIFFUSER ADJUSTMENT 15
5.2 MAINTENANCE 15
5.3 DIFFUSER EXTENSION – (H3-45 VIP / X3-45 VIP) 16

6. DIESEL EXHAUST FLUID (DEF) TANK AND INJECTION SYSTEM 16

6.1 DIESEL EXHAUST FLUID 16
6.2 DEF TANK CLEANING 18
6.3 PUMP ASSEMBLY FILTER ELEMENT REPLACEMENT 19
6.4 FILLER NECK STRAINER 20

7. AFTERTREATMENT HYDROCARBON DOSER 20

7.1 REPLACEMENT 20

1. TORQUE TABLES

The following tables list the tightening torques for the bolts, nuts, etc. on the DPF assembly which do require a specific torque value. *When no torque specifications are indicated, use the Standard Torque Specifications table found in Section 00: General Information of the Maintenance Manual.*

1.1 X3 SERIES

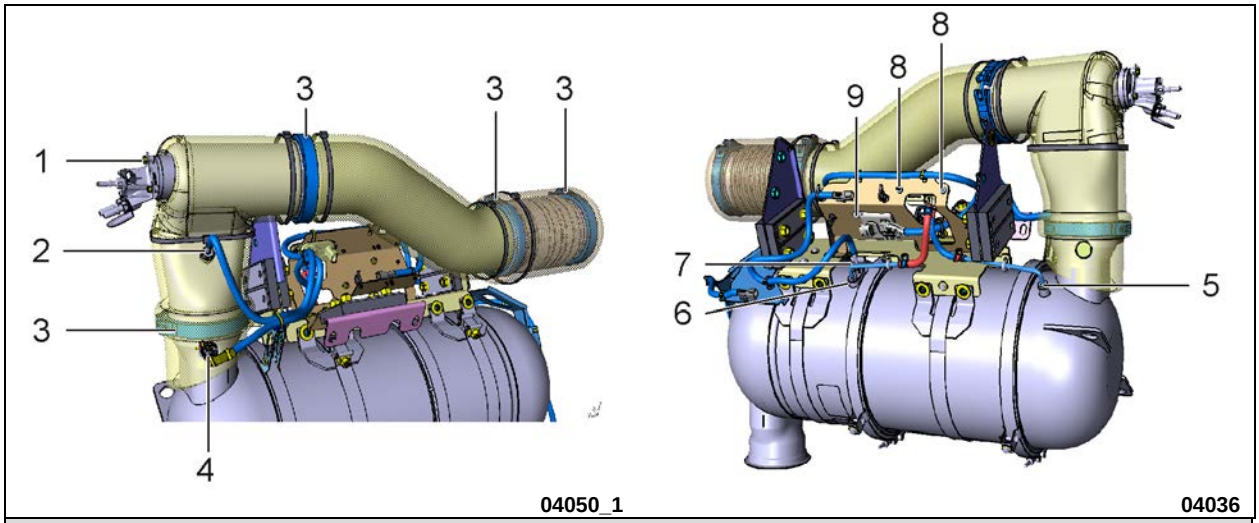

X3 SERIES TORQUE SPECIFICATIONS		
No	DESCRIPTION	TORQUE
1	DEF injection nozzle mounting bolt	6.3-8.5 lb-ft (9-12 Nm)
2	DPF outlet temperature sensor	30-37 lb-ft (41-50 Nm) *
3	V-band clamp 4-inch & 5-inch	6.5-9.5 lb-ft (9-13 Nm)
4	NOx sensor 1	30-44 lb-ft (41-60 Nm) *
5	DPF filter outlet pressure sensor	3.7-4.6 lb-ft (5.02-6.24 Nm) *
6	DPF filter inlet pressure sensor	3.7-4.6 lb-ft (5.02-6.24 Nm) *
7	Diesel Oxidation Catalyst (DOC) temperature sensor (T2)	30-37 lb-ft (41-50 Nm) *
8	Cap screw	3.8-5.1 lb-ft (5.15-6.91 Nm)
9	Module mounting bolt	5.9-8.8 lb-ft (8-11.93 Nm)

* Use Permatex 454G anti-seize lubricant or Loctite 76764 silver grade anti-seize

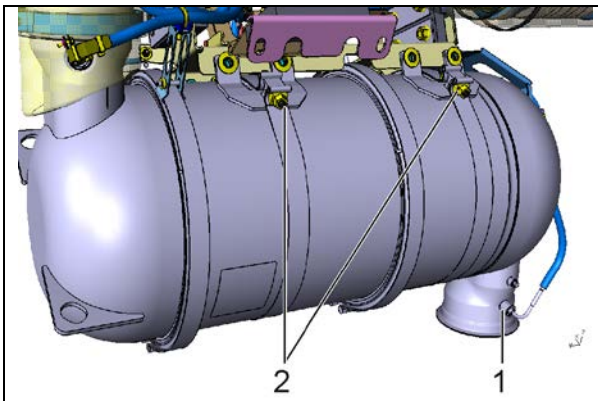

04037

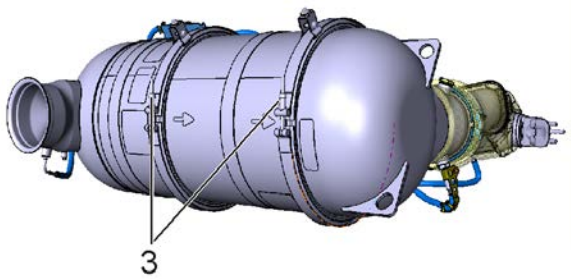

04038

X3 SERIES TORQUE SPECIFICATIONS		
No	DESCRIPTION	TORQUE
1	DPF inlet temperature sensor	30-37 lb-ft (41-50 Nm)*
2	DPF tank strap	17-23 lb-ft (23-31 Nm)
3	DPF tank V-band clamp	17-23 lb-ft (23-31 Nm)

* Use Permatex 454G anti-seize lubricant or Loctite 76764 silver grade anti-seize

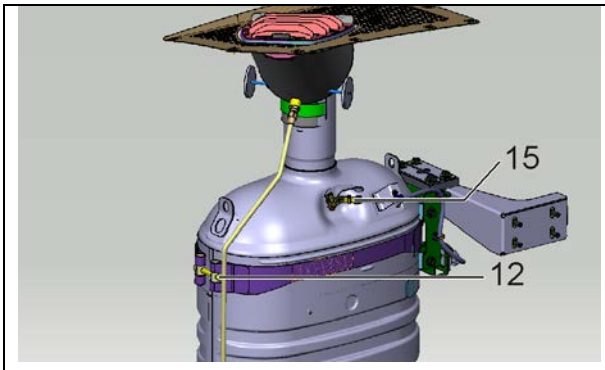

04039_2

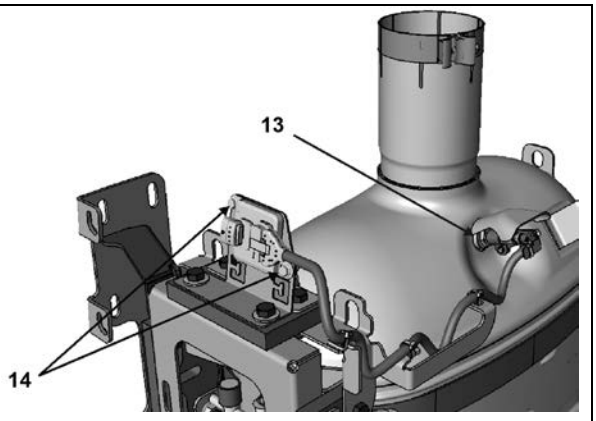

X3 SERIES TORQUE SPECIFICATIONS		
No	DESCRIPTION	TORQUE
12	SCR tank strap bolts	30-37 lb-ft (41-50 Nm)
13	SCR tank particulate matter sensor	33-40.5 lb-ft (45-55 Nm)
14	Module mounting bolts	5.9-8.8 lb-ft (8-11.93 Nm)
15	NOx sensor 2 (outlet)	30-44 lb-ft (41-60 Nm)

* Use Permatex 454G anti-seize lubricant or Loctite 76764 silver grade anti-seize

1.2 H3 SERIES

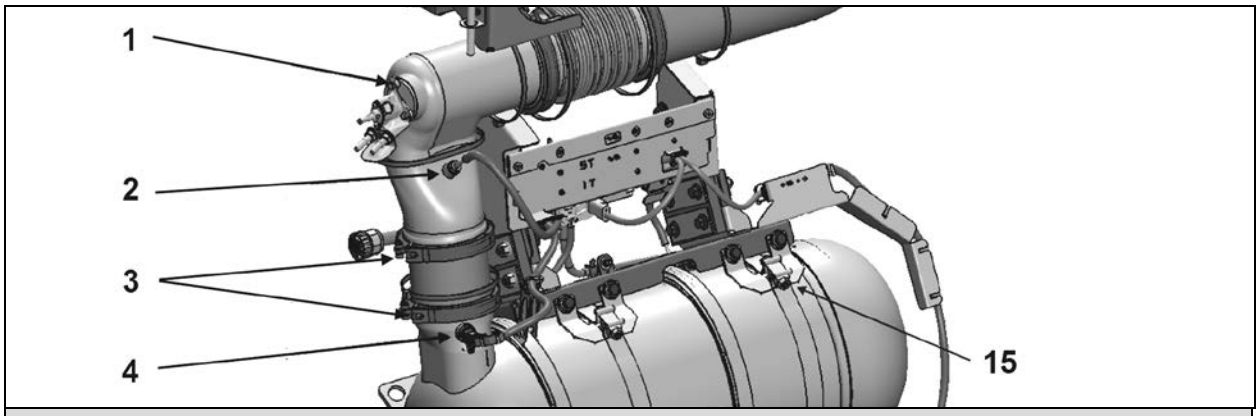

H3 SERIES TORQUE SPECIFICATIONS		
No	DESCRIPTION	TORQUE
1	DEF injection nozzle mounting bolt	6.3-8.5 lb-ft (9-12 Nm)
2	DPF outlet temperature sensor	30-37 lb-ft (41-50 Nm) *
3	V-band clamp 4-inch & 5-inch	6.5-9.5 lb-ft (9-13 Nm)
4	NOx sensor 1	30-44 lb-ft (41-60 Nm) *
15	DPF tank strap	17-23 lb-ft (23-31 Nm)

* Use Permatex 454G anti-seize lubricant or Loctite 76764 silver grade anti-seize

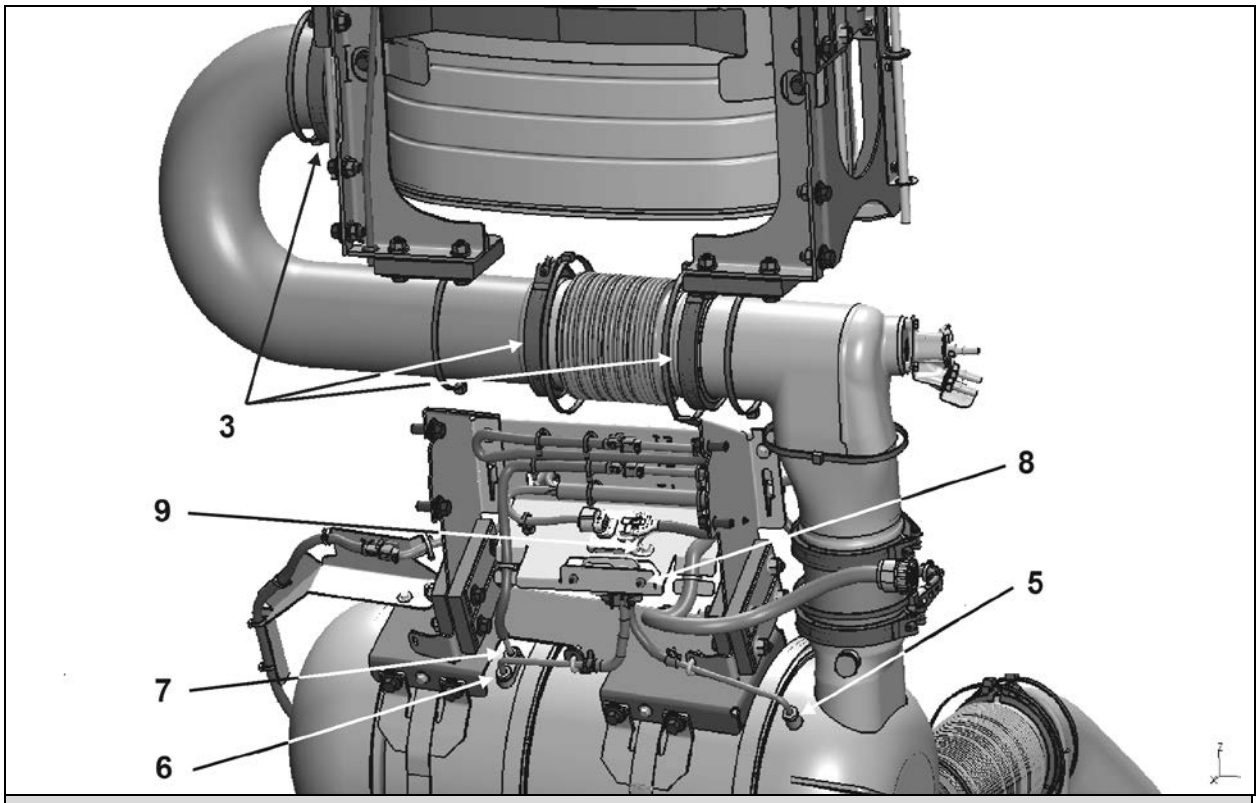

H3 SERIES TORQUE SPECIFICATIONS		
No	DESCRIPTION	TORQUE
3	V-band clamp 4-inch & 5-inch	6.5-9.5 lb-ft (9-13 Nm)
5	DPF filter outlet pressure sensor	3.7-4.6 lb-ft (5.02-6.24 Nm) *
6	DPF filter inlet pressure sensor	3.7-4.6 lb-ft (5.02-6.24 Nm) *
7	Diesel Oxidation Catalyst (DOC) temperature sensor (T2)	30-37 lb-ft (41-50 Nm) *
8	Cap screw	3.8-5.1 lb-ft (5.15-6.91 Nm)
9	Module mounting bolt	5.9-8.8 lb-ft (8-11.93 Nm)

* Use Permatex 454G anti-seize lubricant or Loctite 76764 silver grade anti-seize

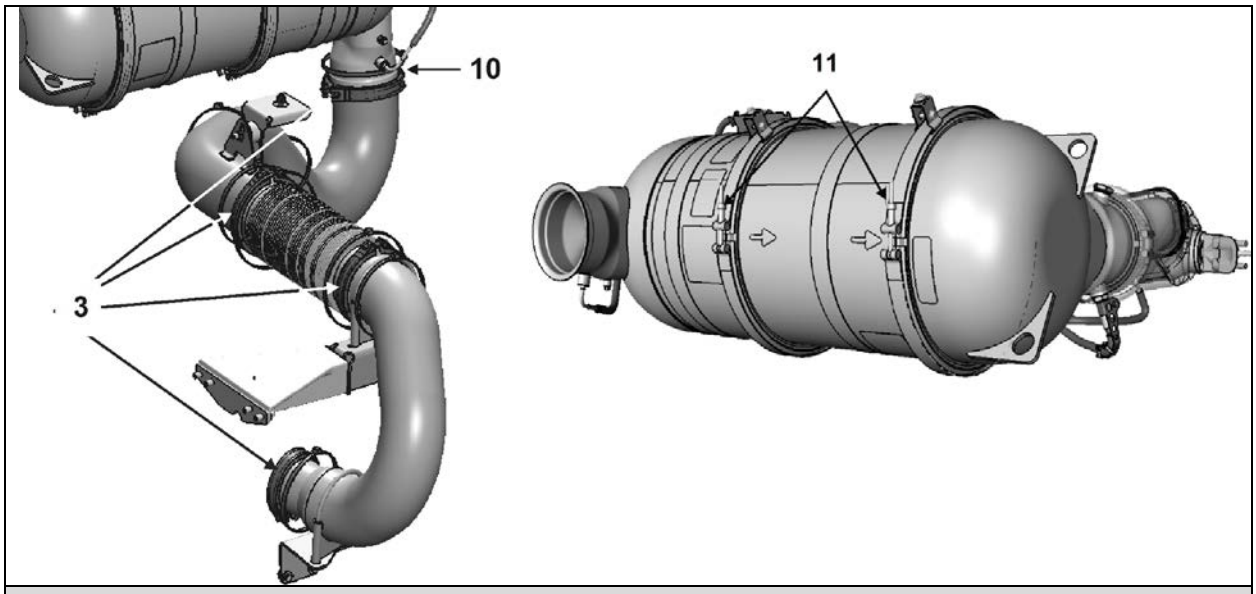

H3 SERIES TORQUE SPECIFICATIONS		
No	DESCRIPTION	TORQUE
3	V-band clamp 4-inch & 5-inch	6.5-9.5 lb-ft (9-13 Nm)
10	DPF inlet temperature sensor	30-37 lb-ft (41-50 Nm) *
11	DPF tank V-band clamp	17-23 lb-ft (23-31 Nm)

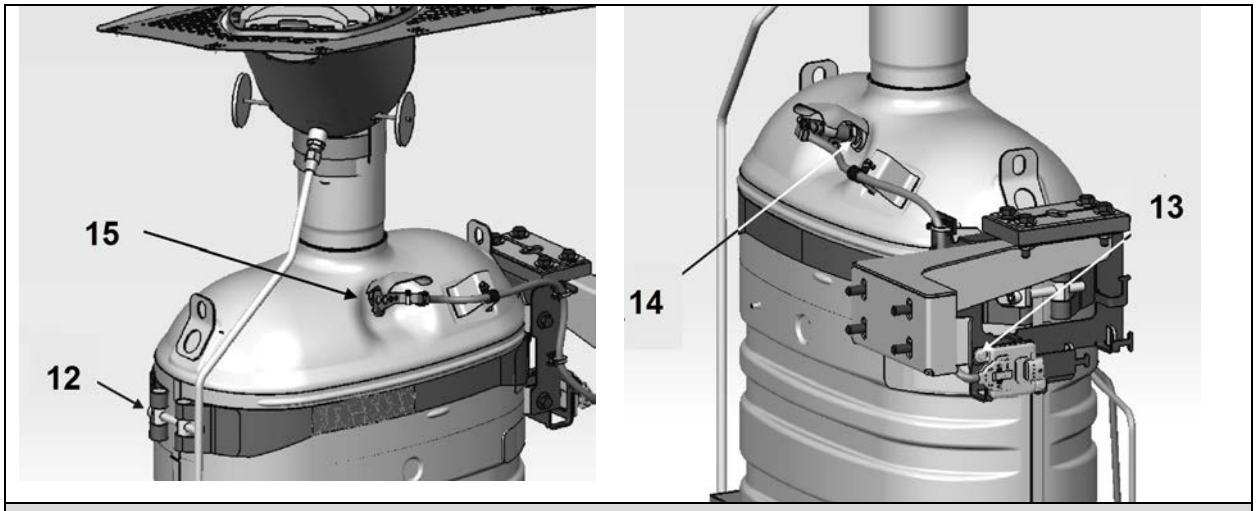

H3 SERIES TORQUE SPECIFICATIONS		
No	DESCRIPTION	TORQUE
12	SCR tank strap	30-37 lb-ft (41-50 Nm)
13	Module mounting bolt	6.3-8.5 lb-ft (9-12 Nm)
14	SCR tank particulate matter sensor	33-40.5 lb-ft (45-55 Nm)
15	SCR tank NOx sensor 2 (outlet)	30-44 lb-ft (41-60 Nm)

* Use Permatex 454G anti-seize lubricant or Loctite 76764 silver grade anti-seize

1.3 MISCELLANEOUS TORQUES

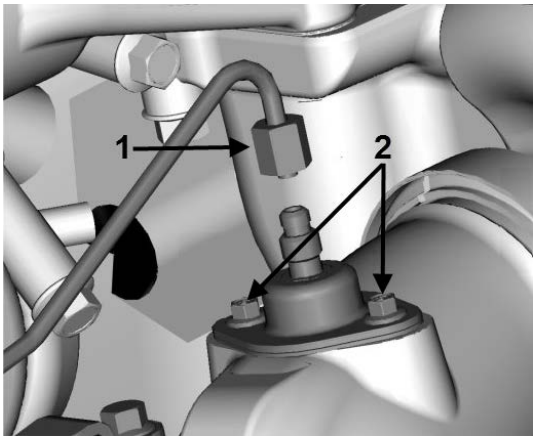

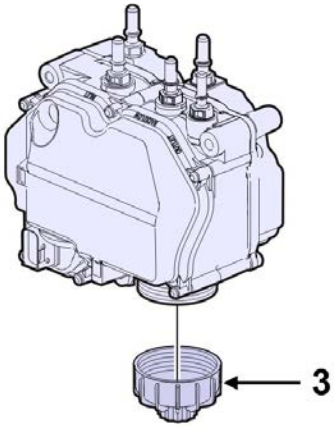

MISCELLANEOUS TORQUES		
No	DESCRIPTION	TORQUE
1	Aftertreatment hydrocarbon doser fuel line fitting	177-213 lb-in (20-24 Nm)
2	Aftertreatment hydrocarbon doser mounting bolts	120-130 lb-in (14-15 Nm)
3	DEF pump filter cover	22 lb-ft (30 Nm)

2. EXHAUST AFTERTREATMENT SYSTEM OVERVIEW

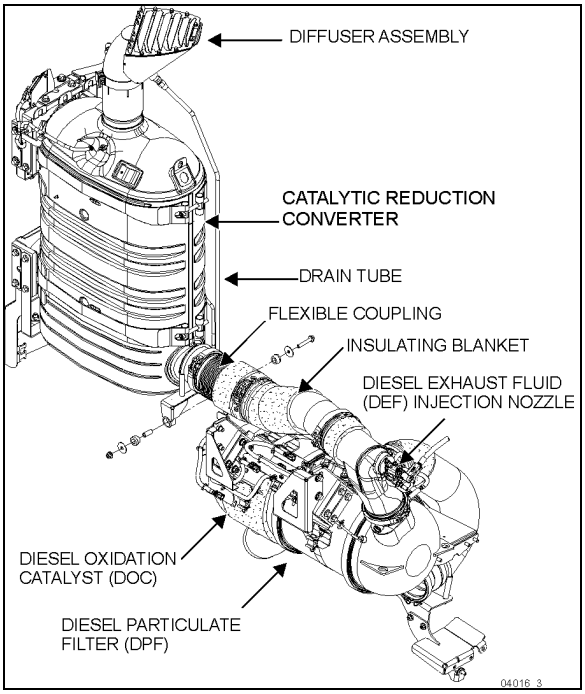

FIGURE 1: EXHAUST SYSTEM

The technology behind clean emissions is through the immediate aftertreatment of engine exhaust. The process for reducing NOx via aftertreatment is called Selective Catalytic Reduction (SCR). It requires a catalytic converter into which is injected Diesel Exhaust Fluid (DEF). The primary component of DEF is water; the active component is urea. Urea is a nitrogen compound that turns to ammonia when heated. When a urea-and-water solution is injected into the exhaust stream and passed over a catalyst, the urea reacts with the NOx to form nitrogen and water vapor – two clean and harmless components of the air we breathe. The aftertreatment system primary function is to capture and oxidize (regenerate) the particulate matter (soot) in the engine exhaust gases and to reduce NOx. To achieve this goal, the exhaust aftertreatment system is split into two main sections: the exhaust gases first enter the **Diesel Oxidation Catalyst (DOC)** and **Diesel Particulate Filter (DPF)** assembly to capture and regenerate the soot on a regular or passive basis, then the exhaust gases flow through the **catalytic converter** to reduce NOx to minimum level. Through constant monitoring of the exhaust gas temperature and the system back pressure, the Engine management System (EMS) is able to manage regeneration.

The exhaust aftertreatment system is rubber mounted to the vehicle structure. This feature reduces the transmission of vibrations to the exhaust aftertreatment system thus resulting in extended life of the system, brackets and also noise reduction.

2.1 MAINTENANCE

Inspect the exhaust system periodically for restrictions and leaks. Figure 1 presents the major components of the exhaust system. Exhaust leaks are commonly the result of loose clamp bolts, corroded or punctured pipes. In addition to excessive noise, a leaking exhaust system could allow toxic gases to enter the vehicle. Damage to surrounding components from hot gases could result as well. Replace damaged or corroded exhaust components immediately.

Inspect the exhaust system as follows:

- At vehicle inspection intervals ;
- Whenever a change is noticed in the sound of the exhaust system ;
- When components close to the exhaust system get unnaturally dirty ;
- Whenever the exhaust system is damaged.

Replace damaged or corroded exhaust system components without delay.

When operating the engine in a service garage or in a closed area, the exhaust must be vented to the outside. Place the shop vent hose over the exhaust outlet pipe.

DANGER

Avoid breathing exhaust gases since they contain carbon monoxide which is odorless and colorless but harmful. Carbon monoxide is a dangerous gas that can cause unconsciousness and can be lethal. If, at any time you suspect that exhaust fumes are entering the vehicle, locate and correct the cause(s) as soon as possible.

WARNING

Diesel engine exhaust and some of its constituents are known to the State of California to cause cancer, birth defects and other reproductive harm.

NOTE

The key to successful regeneration is high exhaust temperature for an extended period of time. For this reason, insulating blankets must remain permanently on the exhaust system.

If insulating blankets are removed from the system, the exhaust gases temperature may not be high enough to permit efficient particulate oxidation during passive regeneration, resulting in increased fuel consumption due to overuse of active or stationary regeneration.

2.2 FLEXIBLE COUPLING INSTALLATION

The flexible coupling contains a rigid interior pipe (

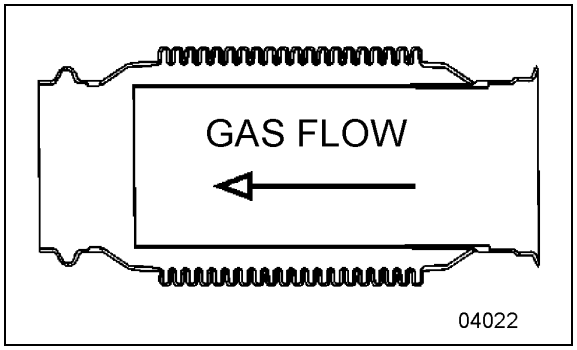

Figure 2). To allow appropriate flexibility once installed, be sure interior pipe is concentric to flexible part and that the flexible coupling is straight when installed. This piece of equipment handles vibration and thermal expansion.

CAUTION

Adequately support the exhaust system line. The load of the exhaust line **must not** be transferred to the turbocharger.

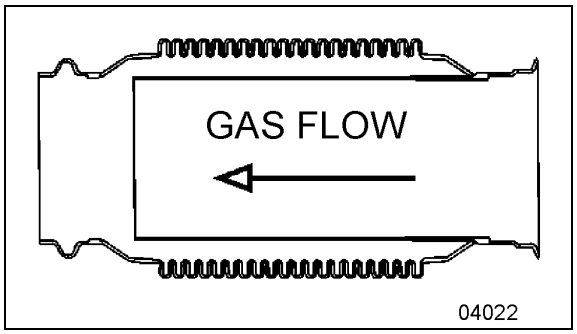

FIGURE 2: FLEXIBLE COUPLING

3. DIESEL PARTICULATE FILTER (DPF)

Besides trapping soot, the **DPF** (**Diesel Particulate Filter**) also traps the ash that has been generated when additives in engine oil are burned. However, unlike soot, ash cannot be oxidized. The ash that accumulates in the filter will eventually cause an increase in exhaust back pressure. EMS will constantly monitor the ash accumulation and forecast the approximate time until DPF ash cleaning is required. This allows you the opportunity to plan for the DPF ash cleaning interval. If ash cleaning is not performed proactively, and the back pressure increases beyond the system limit, EMS will flag the amber warning light on the telltale panel, notifying the operator that an ash cleaning is required. Clean remanufactured DPF cartridge will be available through Prevost on an exchange basis. For most vehicle applications and duty cycle, this will occur after approximately 200,000-400,000 miles (320,000-640,000 km) of operation.

WARNING

HOT SURFACES

Keep yourself clear of hot Aftertreatment System surfaces, particularly during and after active or stationary regeneration. Hot surfaces can cause serious burns.

Make sure Aftertreatment System components are cold before handling.

MAINTENANCE

DPF (Diesel Particulate Filter)

Either clean or replace filter cartridge at the intervals specified by the Lubrication And Servicing Schedule in Section 24: LUBRICATION & SERVICING.

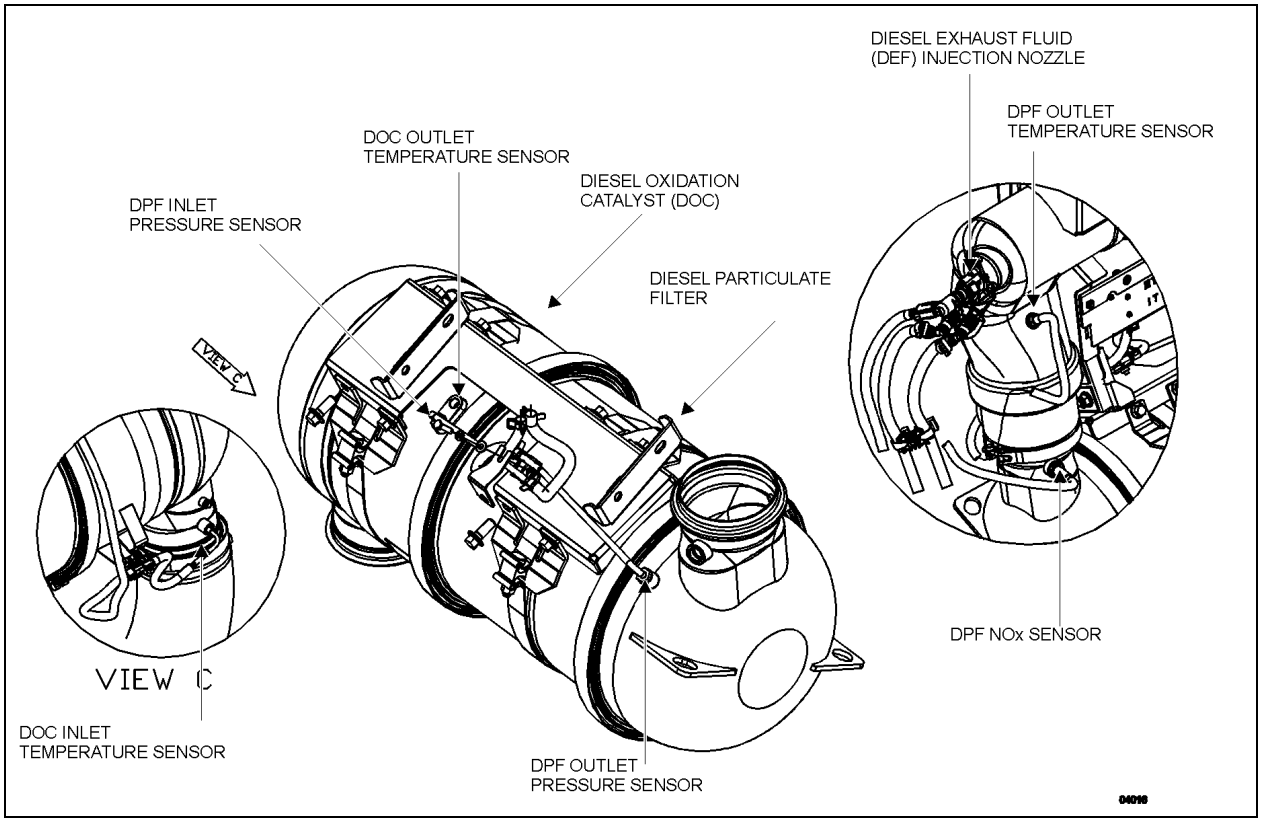

FIGURE 3: DIESEL OXIDATION CATALYST (DOC) & DIESEL PARTICULATE FILTER (DPF) ASSEMBLY

WARNING

HOT EXHAUST

During stationary regeneration, exhaust gases temperature may get very hot at the diffuser outlet. Do not direct diffuser at combustible materials. Before initiating stationary regeneration, make sure that the diffuser outlet is clear of objects and that no one is working near the diffuser outlet. Stationary regenerations must be undertaken outdoors only.

Never initiate regeneration when exhaust gas collection system is in place.

WARNING

TOXICITY

Do not initiate a stationary regeneration in a closed area like a garage. **Stationary regeneration must be undertaken outdoors only.**

3.1 DIESEL PARTICULATE FILTER ASSEMBLY REMOVAL

To remove the DPF, proceed as follows:

CAUTION

External and internal temperatures remain hot long after engine has been shutdown. Allow the Exhaust Aftertreatment System to cool before handling. Wear protective clothing and glove while servicing.

1. First, Access the engine compartment
2. Put insulating blanket aside;
3. Disconnect pressure, NOx and temperature sensors;
4. Support Diesel Oxidation Catalyst (DOC) and Diesel Particulate Filter (DPF) assembly;

CAUTION

HEAVY DEVICE

A suitable lifting or holding device is required. Properly support and attach lifting equipment to prevent the DOC and DPF assembly from falling when servicing.

5. Unfasten clamps holding DOC and DPF assembly;
6. Carefully lower DOC and DPF assembly;
7. To make sure components are reinstalled in the same position, mark position of DOC, DPF and V-band clamps in relation with one another before taking apart;

CAUTION

FRAGILE - HANDLE WITH CARE

Use extreme care when handling DPF cartridge as it could be damaged or destroyed by dropping or sudden impact.

Clean remanufactured DPF filtration cartridge will be available on an exchange basis. For this reason, it is very important to maintain the cartridge in perfect condition. Damaged cartridge may not be refunded.

8. Also replace V-band clamps and gaskets when replacing DPF filtration cartridge;

NOTE

When replacing the DPF cartridge, refer to the specifications on the DPF attached tag for proper replacement DPF selection.

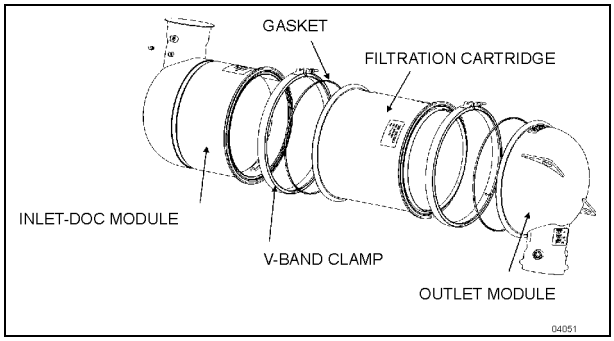

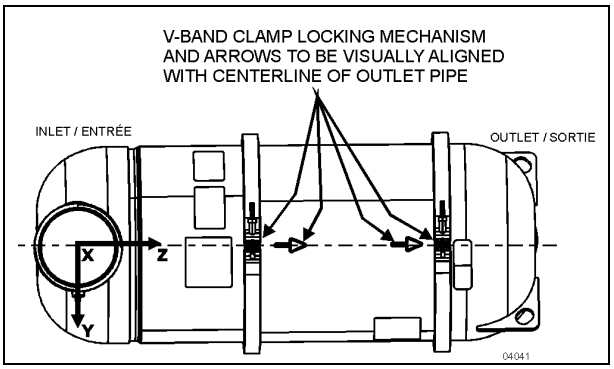

FIGURE 4: TAKING DOC AND DPF APART

9. Always put DOC and DPF filtration cartridge back together again in a vertical position to facilitate gaskets positioning;

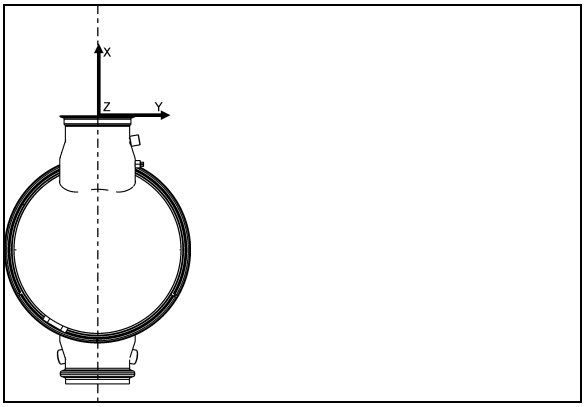

10. Tighten V-band clamps.

TORQUE: 20 lb-ft (27 Nm)

CAUTION

Always torque clamps by hand.

11. With a rubber mallet, hit clamps forcefully around circumference to make sure gasket is fully seated;
12. Support Diesel Oxidation Catalyst (DOC) and Diesel Particulate Filter (DPF) assembly during reinstallation;
13. Reconnect pressure, NOx and temperature sensors;
14. Fasten straps holding DOC and DPF assembly;
15. Put insulating blanket back.

4. CATALYTIC CONVERTER

In the first instance, the catalytic converter of the Selective Catalytic Reduction (SCR) does not

need any maintenance. Unless an accident or damage occurs in the vicinity of the engine compartment; the catalytic converter will not have to be replaced.

However if the catalytic converter must be replaced, use one of the two following procedures:

4.1 REMOVAL

Procedure # 1

Radiator must be removed in order to lower the catalytic converter for replacement.

- Set the starter selector switch to the *OFF* position.
- Shut off the heater line shut-off valves.
- Using the quick-connect drain hose, drain the engine cooling system. Refer to Section 05, COOLING under "DRAINING COOLING SYSTEM".

CAUTION

Tag hoses and cables for identification before disconnecting in order to facilitate re-installation. Plug all openings to prevent dirt from entering the system.

- Disconnect and remove section of coolant pipe assembly mounted between the radiator outlet and the water pump inlet.

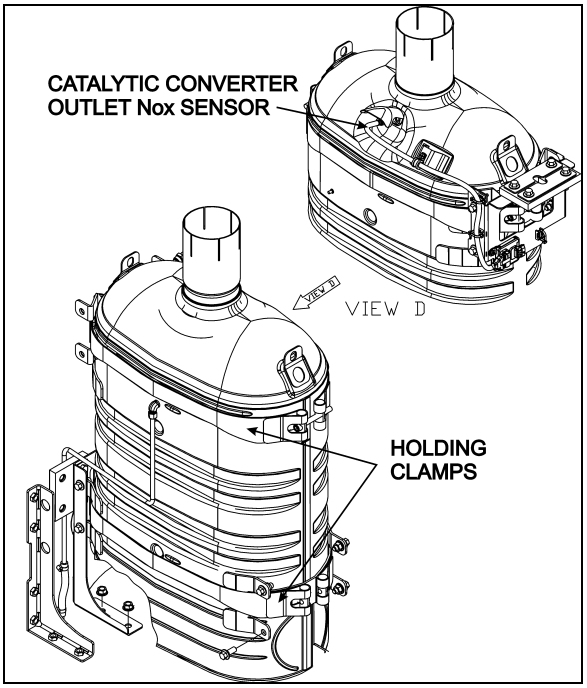

FIGURE 5: CATALYTIC CONVERTER

- Disconnect and remove a section of coolant pipe assembly mounted between the thermostat housing and the radiator inlet.
- Disconnect the electric fan-clutch connector located near the cooling fan right angle gearbox.
- Disconnect and remove the air intake duct mounted between the turbocharger outlet and the air cooler inlet.
- Open radiator door. Unfasten bolts and screws fixing radiator sealing frame.
- Remove radiator and air cooler assembly.

WARNING

Due to the heavy load of the radiator assembly, it must be adequately supported before attempting to remove it.

- Safely support catalytic converter from the top.
- Disconnect catalytic converter outlet NOx sensor.
- Remove clamps holding catalytic converter then lower.
- Remove or disconnect any piece of equipment or component that might be in the

way or that might prevent removing the catalytic converter.

Procedure # 2

- Set the starter selector switch to the *OFF* position.
- Shut off the heater line shut-off valves.
- Remove DOC and DPF assembly (Refer to paragraph 2.1 in this Section).
- Remove pipe connecting DOC & DPF assembly to catalytic converter.
- Using the quick-connect drain hose, drain the engine cooling system. Refer to Section 05, COOLING under "DRAINING COOLING SYSTEM".

CAUTION

Tag hoses and cables for identification before disconnecting in order to facilitate re-installation. Plug all openings to prevent dirt from entering the system.

- Disconnect and remove section of coolant pipe assembly mounted between the radiator outlet and the water pump inlet.
- Disconnect and remove a section of coolant pipe assembly mounted between the thermostat housing and the radiator inlet.
- Disconnect and remove the air intake duct mounted between the turbocharger outlet and the air cooler inlet.
- Remove coolant surge tank.
- Release tension from drive belt (Refer to paragraph 12.1 and 15.1 in Section 05: Cooling System).
- Cut cable ties and disconnect electrical connector from fan clutch. Remove fan drive shaft fasteners at the gear box.
- Remove radiator fan drive mechanism support.
- Safely support catalytic converter from the top.
- Disconnect catalytic converter outlet NOx sensor.
- Remove clamps holding catalytic converter then lower.
- Remove or disconnect any piece of equipment or component that might be in the way or that might prevent removing the catalytic converter.

4.2 ASSEMBLING CATALYTIC CONVERTER

Before removing

- Mark, with a vertical line the angular position of the lower (both sides) and upper clamps with regard to the clamps support located on the catalytic converter.

Lower

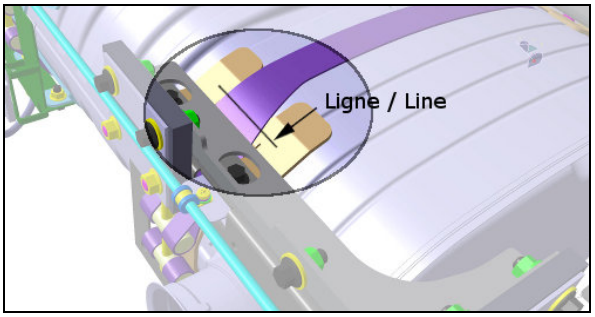

Upper

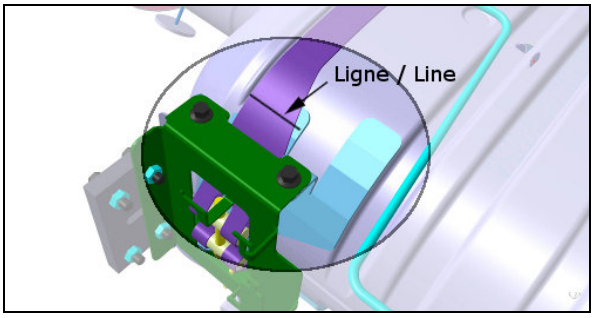

- Mark, with a vertical line the central position of the lower and upper clamps with regard to the emboss located at the bottom and at the top of the catalytic converter.

Lower

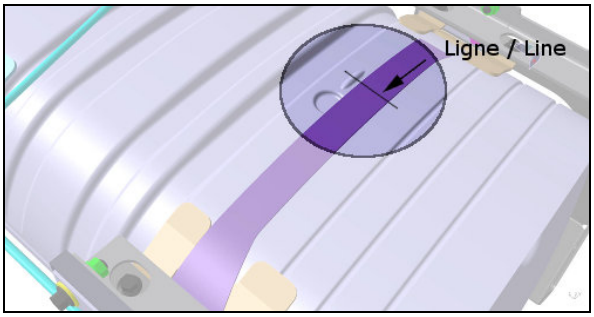

Upper

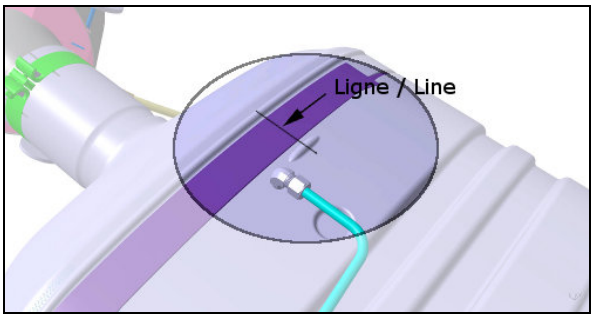

Assembling

- Position the upper clamps above the upper emboss and the lower clamps below the lower emboss of the catalytic converter.

Lower

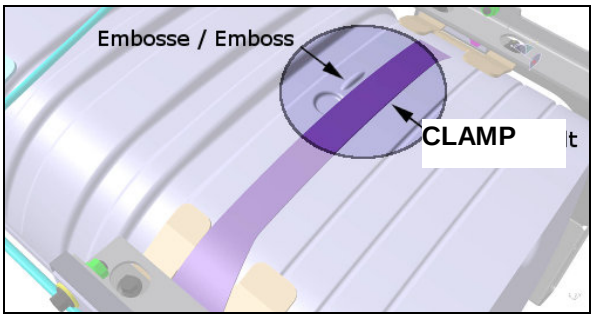

Upper

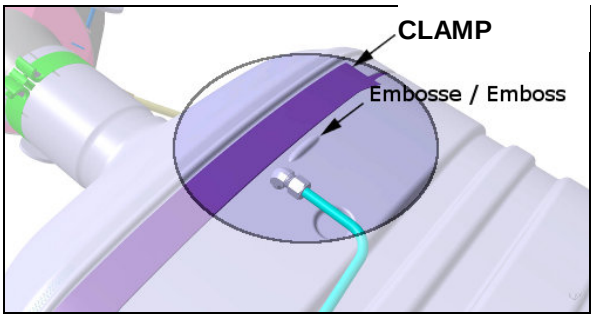

- Using the lines made earlier, line up the lower and upper clamps with regard to the emboss of the converter and afterward, line up the lines made earlier on the clamps with regard to the clamp supports on the catalytic converter.

Lower

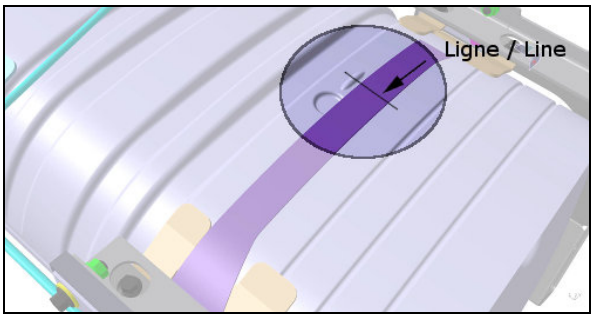

Upper

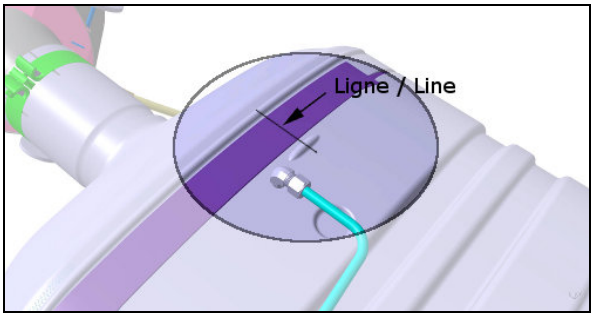

Lower

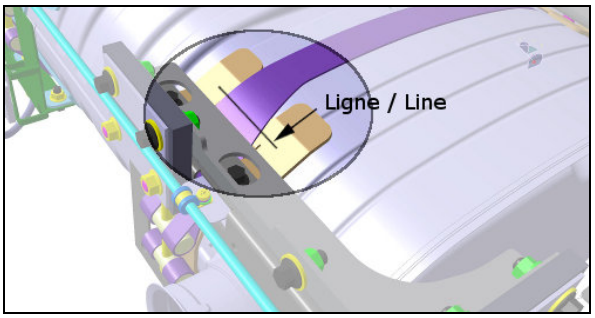

Upper

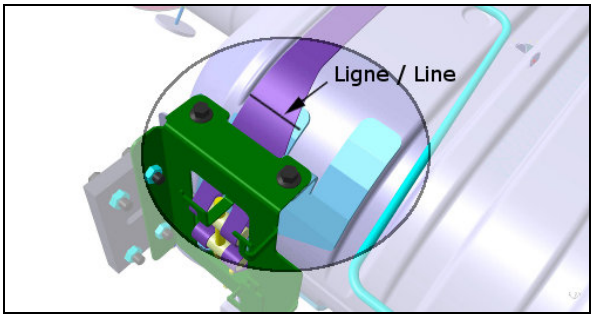

- Before tightening the parts, make sure that the catalytic converter lower support is well

centered with the exhaust inlet of the catalytic converter.

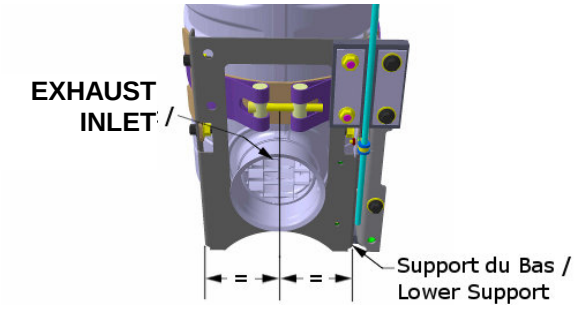

- While tightening the bolts, keep in mind to respect the alignment of the parts and keep the lower support as centered as possible with the catalytic converter exhaust inlet.

5. DIFFUSER ASSEMBLY

During stationary regeneration, exhaust gases temperature may get very hot at the outlet. The diffuser decreases the exhaust gas temperature by about half at 6 inches above the diffuser. The diffuser is an important component of the exhaust system and must remain on the vehicle at all times. Operating the vehicle without the diffuser may seriously damage the vehicle.

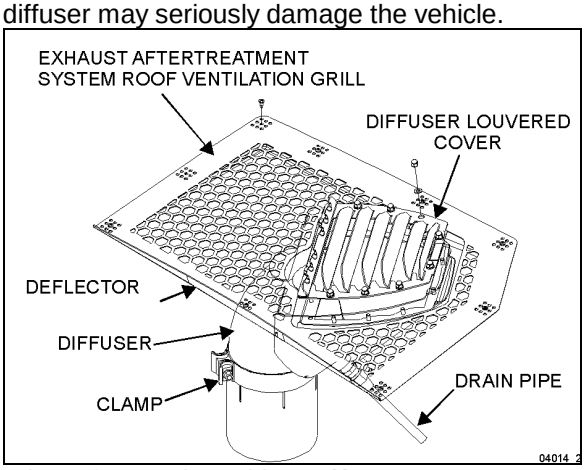

FIGURE 6: DIFFUSER ASSEMBLY

5.1 DIFFUSER ADJUSTMENT

Should an adjustment of the diffuser position be necessary, first remove the exhaust aftertreatment roof ventilation grill.

CAUTION

To prevent paint damage and fiberglass overheating caused by hot exhaust gases, the diffuser louvered cover must be flush with the roof surface or may not exceed the roof surface more than 3/32 inch (2 mm).

CAUTION

Tighten clamps properly in order to prevent any movement of the diffuser assembly. An impact wrench is necessary.

1. Loosen the clamp securing the diffuser assembly to the catalytic converter.

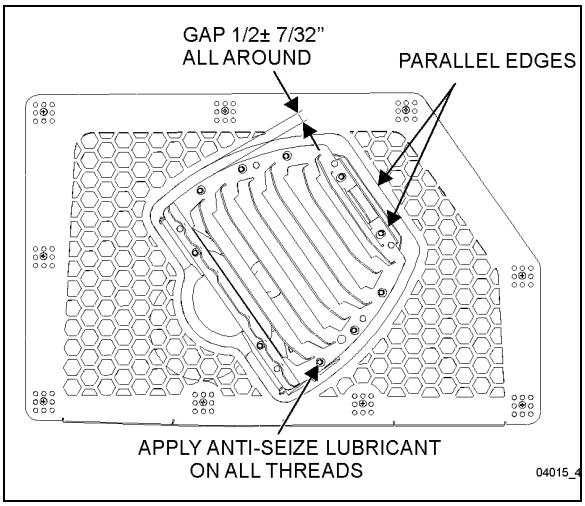

FIGURE 7: DIFFUSER POSITION ADJUSTMENT

2. For proper angular position, make sure that the two edges shown on figure 7 are parallel with each other.
3. Using a straightedge, adjust the diffuser assembly level. The top surface of the warning plate fixed on the diffuser louvered cover must be flush with the roof surface or may exceed about 3/32in (2mm).
4. Tighten the clamp securing the diffuser assembly to the catalytic converter.
5. Reinstall the exhaust aftertreatment system roof ventilation grill and deflector.

5.2 MAINTENANCE

At vehicle inspection intervals, inspect the diffuser assembly as follows:

- Inspect diffuser grille for stress cracking;
- Check for presence of foreign matter and debris inside the diffuser housing, remove and clean if applicable;
- Check for proper functioning of the rain cap inside the diffuser housing, make sure that it moves freely;

- Make sure that the water drain tube is not clogged. Pour a cup of water into the diffuser housing and assure that all the water is drained at once at the other end of the drain tube. If tube is clogged, remove tube and blow compressed air inside, in reverse flow;
- Check that the warning plate ”THIS DIFFUSER SURFACE MUST BE FLUSH WITH THE ROOF SURFACE” is still in place.

MAINTENANCE

Diffuser assembly

Inspect the diffuser assembly at the intervals specified by the Lubrication And Servicing Schedule in Section 24: LUBRICATION & SERVICING.

5.3 DIFFUSER EXTENSION – (H3-45 VIP / X3-45 VIP)

A diffuser extension is available for converters. To install:

1. Remove the existing diffuser louvered cover;
2. Mount the extension on the diffuser housing. Secure with the 10 existing cap nuts;
3. Slide the heat shield over the extension;
4. Place the diffuser louvered cover over the assembly and secure with a second set of 10 identical cap nuts.

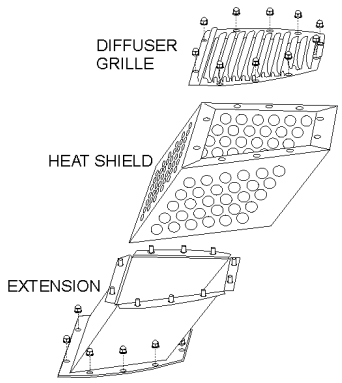

FIGURE 8: DIFFUSER EXTENSION

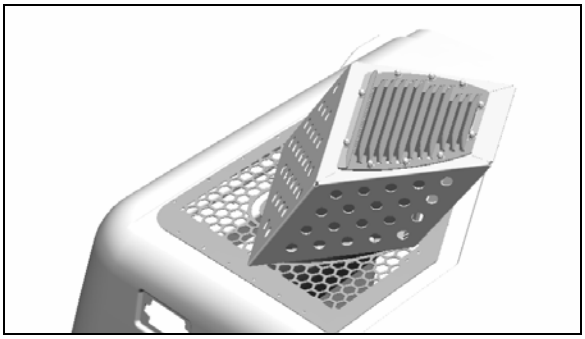

FIGURE 9: DIFFUSER EXTENSION FOR MOTORHOMES

6. DIESEL EXHAUST FLUID (DEF) TANK AND INJECTION SYSTEM

The DEF tank and injection system control unit continuously vary the amount of DEF injected in response to the engine’s current load conditions.

Diesel Exhaust Fluid (DEF) is stored in a 16 gallons (60 liters) plastic tank located curb side, in the condenser compartment.

A pump located beside the DEF tank is used to pressurize the system and deliver the fluid.

A heating coil inside the tank uses engine coolant to keep the DEF in a liquid state or to melt DEF at engine start up during cold season.

DEF is injected into the exhaust gases through an injection nozzle located between the DPF and the catalytic converter (refer to figure 1).

In the catalytic converter, nitrogen oxides are transformed into harmless nitrogen gas and water.

The system notifies the driver when it is time to top up with DEF.

6.1 DIESEL EXHAUST FLUID

When handling DEF solution, it is important that electrical connectors to be connected or well encapsulated, otherwise there is a risk that the DEF will cause oxidation that cannot be removed. Water or compressed air will not help, since DEF quickly oxidizes certain metals. If a disconnected connector comes into contact with the DEF solution, it must be replaced immediately to prevent the DEF solution from creeping further into the copper wiring, which takes place at a speed of about 2.4 in (60 mm) per hour.

CAUTION

Diesel Exhaust Fluid (DEF) is a nontoxic aqueous solution of urea (32.5%) and ultra-pure water (67.5%). Urea is a compound of nitrogen that turns to ammonia when heated. The fluid is non-flammable, and is not dangerous when handled as recommended. However, it is highly corrosive to certain metals, especially copper and brass.

When detaching hoses and components, do not spill DEF on disconnected or unsealed connectors. If DEF is spilled on a disconnected or unsealed connector, the connector must be removed immediately and replaced.

Things to know about spilt diesel exhaust fluid (DEF):

- If urea solution comes into contact with the skin, rinse with plenty of water and remove contaminated clothing.
- If urea solution comes into contact with the eyes rinse for several minutes and call for medical help if necessary.
- If inhaled breathe fresh air and call for medical help if necessary.
- Do not allow the DEF solution to come into contact with other chemicals.
- The DEF solution is not flammable. If the DEF solution is exposed to high temperatures, it breaks down into ammonia and carbon dioxide.
- The DEF solution is highly corrosive to certain metals, including copper and aluminum.
- If the DEF solution is spilled onto the vehicle, wipe off the excess and rinse with water. Spilled DEF solution can form concentrated white crystals on the vehicle. Rinse off these crystals with water.

WARNING

DEF spilt onto hot components will quickly vaporize. Turn your face away!

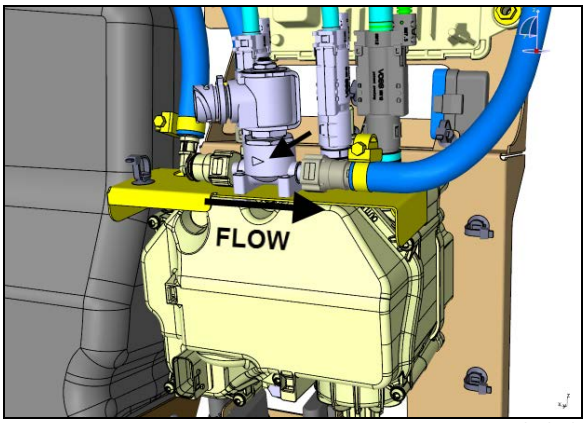

04052

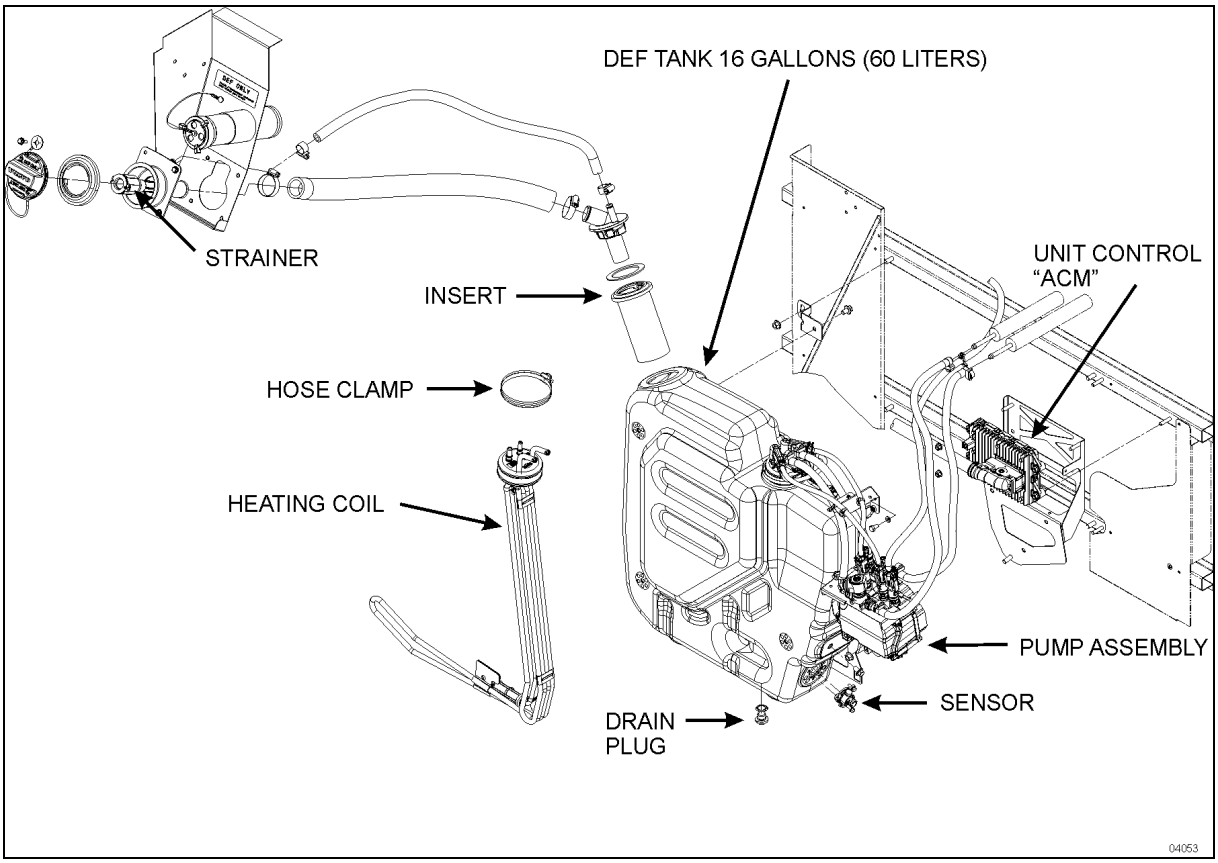

FIGURE 10: H SERIES DEF TANK AND PUMP

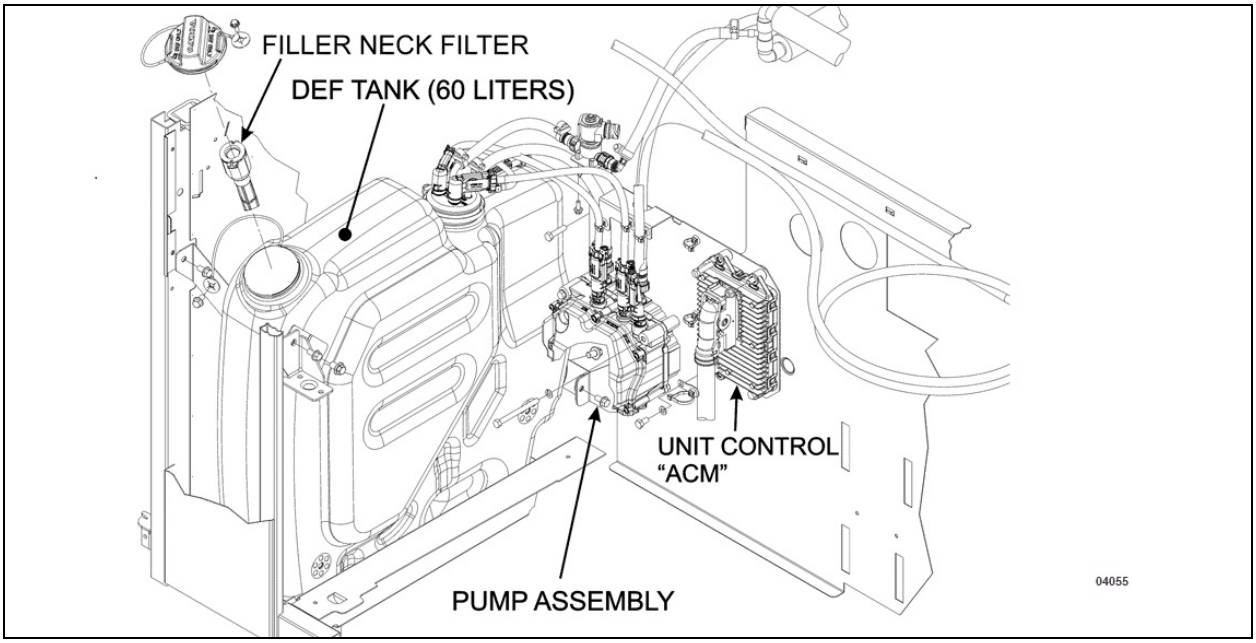

FIGURE 11 X SERIES DEF TANK AND PUMP

6.2 DEF TANK CLEANING

Removing the DEF tank for cleaning is not necessary.

1. Put a suitable container under the DEF tank.
2. Remove the DEF tank drain plug through the DEF tank support pan access hole.

3. Let all of the DEF drain from the tank. Discard the used DEF according to local regulations.
4. Remove the DEF tank filler neck insert. To do so, release the retaining tab and remove filler neck insert. Replace old seal if damaged.

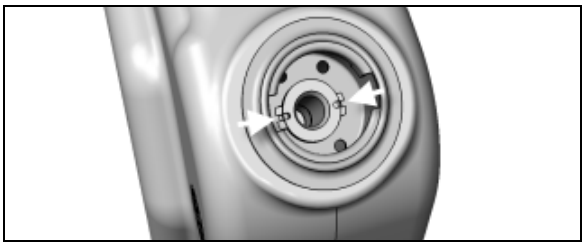

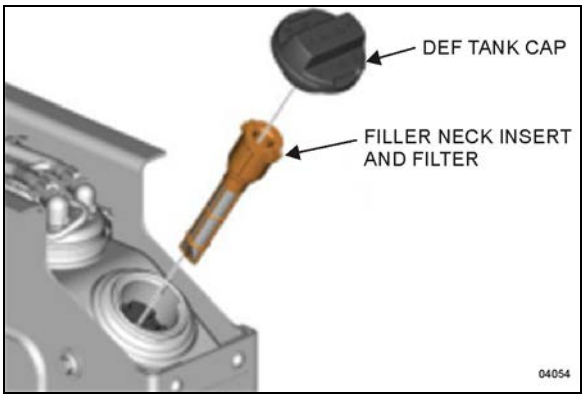

5. Flush the tank with hot water. Let all of the water drain from the tank.
6. Clean the filler neck insert screen with hot water.
7. Reinstall the filler neck insert until the retaining tabs snap into filler neck. Reinstall DEF tank drain plug.

MAINTENANCE

Drain and clean DEF tank and filler neck insert filter with hot water at the intervals specified by the Lubrication And Servicing Schedule in Section 24: LUBRICATION & SERVICING.

6.3 PUMP ASSEMBLY FILTER ELEMENT REPLACEMENT

1. Clean the area around filter cover.
2. Before you loosen the filter cover, place a suitable container under the cover to catch fluid that may drain from the pump;
3. Remove filter cover.

CAUTION

Contamination or damage of the sealing surface on the housing is not acceptable.

4. Use needle nose pliers to carefully remove the equalizer and filter element. Do not damage the sealing surface on the housing.

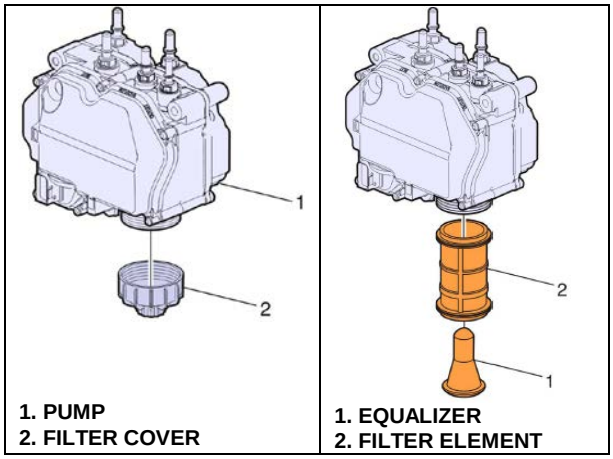

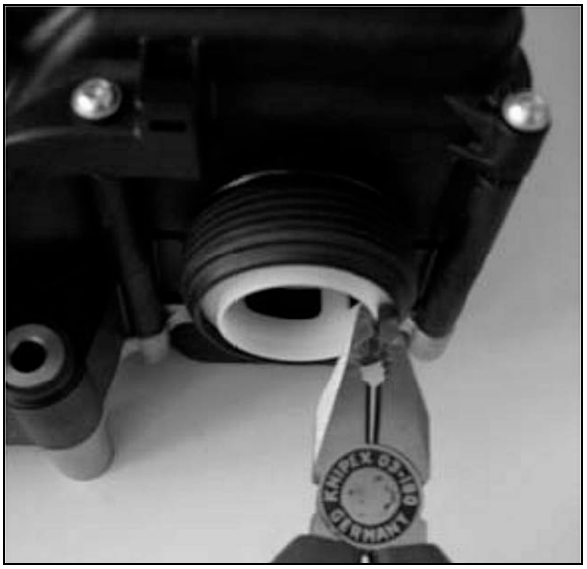

FIGURE 12 : PUMP ASSEMBLY FILTER ELEMENT

5. Install new filter element and equalizer. Checks filter element cover and housing for damage. If either the filter or housing is damaged, the damaged part must be changed.
6. Install filter cover.

TORQUE: 22 lb-ft (30 Nm)

CAUTION

Check if there are cracks around the area of the filter cover. No cracks in the material are allowed.

MAINTENANCE

Replace DEF pump filter element and equalizer at the intervals specified by the Lubrication And Servicing Schedule in Section 24: LUBRICATION & SERVICING.

6.4 FILLER NECK STRAINER

If the DEF tank filler neck strainer (figure 10) becomes obstructed with foreign matter and debris, remove and clean strainer as follows;

1. Remove filler neck cap.
2. Release the retaining tabs and remove filler neck strainer from the filler neck. Discard the old seal.
3. Clean and reinstall strainer into DEF tank filler neck with new seal.
4. Insert until the retaining tabs snap into the filler neck.

7. AFTERTREATMENT HYDROCARBON DOSER

Proper functioning of the aftertreatment hydrocarbon doser a.k.a. aftertreatment hydrocarbon injector (AHI) is required in order to obtain efficient regeneration process of the DPF. Clogged aftertreatment hydrocarbon doser will result in clogged DPF.

In addition to the activation of the CHECK telltale, emission of diagnostic troubleshooting codes (DTC) by the engine ECM (MID128) will indicate malfunction of the aftertreatment system and/or aftertreatment hydrocarbon doser. DTC may be accessed through the Driver Information Display. Select DIAGNOSTICS menu then FAULT DIAGNOSTICS and ENGINE ECU submenus.

Check status of the aftertreatment system through the Driver Information Display. Select AFTERTREATMENT menu then ATS STATUS. Then check the DPF soot level with SOOT LEVEL GAUGE.

MAINTENANCE

Aftertreatment hydrocarbon doser

Replace the aftertreatment hydrocarbon doser at the intervals specified by the Lubrication And Servicing Schedule in Section 24: LUBRICATION & SERVICING.

7.1 REPLACEMENT

1. Remove fastener and p-clamp securing the line to the mounting bracket on the diffuser pipe.

WARNING

Fuel leaked or spilled onto hot surfaces or electrical components can cause a fire and result in component damage and serious personal injury.

2. Disconnect the line from the aftertreatment hydrocarbon injector fitting. Collect any residual fuel that might be in the line in a suitable container.

CAUTION

Do not kink the line. Kinking the line may result in leakage.

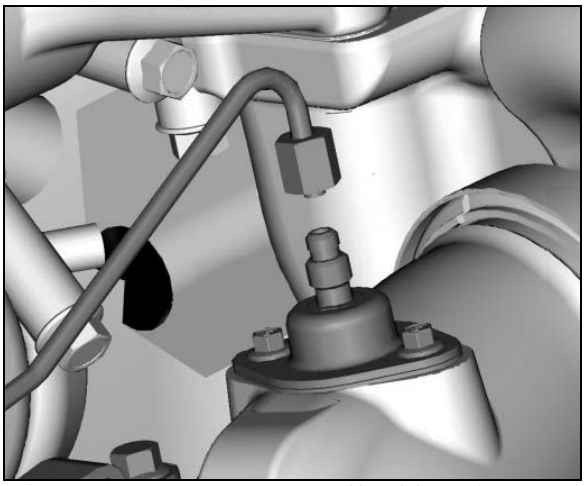

FIGURE 13: AFTERTREATMENT HYDROCARBON DOSER

3. Remove the aftertreatment hydrocarbon injector mounting fasteners. Remove the aftertreatment hydrocarbon injector from the diffuser pipe (which attaches to the turbocharger outlet).
4. Clean the sealing surface on the diffuser pipe before mounting the aftertreatment hydrocarbon injector.
5. Install the new aftertreatment hydrocarbon injector and new gasket onto the diffuser pipe (which attaches to the turbocharger outlet) and tighten the fasteners.

TORQUE: 120-130 lb-in (14-15 Nm)

NOTE
The fasteners already include pre-applied high-temperature anti-seize compound.

6. Connect the line to the aftertreatment hydrocarbon injector. Tighten the line fitting.

TORQUE: 177-213 lb-in (20-24 Nm)

7. Install the P-clamp and fastener to secure the line to the mounting bracket on the diffuser pipe.
8. Start the engine, build air to operating pressure. Start the service regeneration process. When fuel dosing starts, check for leaks starting on the hot side of the engine. Clear any diagnostic trouble codes, if needed.

NOTE
If fault tracing was performed using Guided Diagnostics, return to Guided Diagnostics for repair verification.

CONTENTS

1 TORQUE TABLES 3

1.1 HOSE CLAMPS 3
1.2 PULLEY, IDLERS & TENSIONERS 4
1.3 COOLING FAN DRIVE MECHANISM 5
1.4 RIGHT ANGLE GEARBOX 6
1.5 MISCELLANEOUS TORQUES 6

2 DESCRIPTION 8

3 MAINTENANCE 9

3.1 GENERAL RECOMMENDATIONS 9

4 HOSES 9

4.1 HOSE CLAMPS ON COOLANT LINES 9
4.1.1 Oetiker Screw Clamps 11
4.2 CONSTANT-TORQUE HOSE CLAMPS ON CHARGE AIR COOLER (CAC) SYSTEM 11

5 THERMOSTAT OPERATION 12

5.1 THERMOSTAT REPLACEMENT 12
5.2 CHECKING THERMOSTAT 12

6 COOLANT 13

6.1 COOLANT LEVEL VERIFICATION 13
6.2 COOLANT LEVEL SENSOR 13
6.3 THAWING COOLING SYSTEM 13
6.4 COOLANT RECOMMENDATIONS FOR VOLVO D13 ENGINE 13
6.5 COOLANT SAMPLING 14

7 DRAINING COOLING SYSTEM 15

8 FILLING COOLING SYSTEM 16

9 FLUSHING 17

9.1 COOLING SYSTEM DESCALERS 17
9.2 REVERSE FLUSHING 18

10 SPIN-ON COOLANT FILTER 18

11 RADIATOR 19

11.1 MAINTENANCE 19
11.2 RADIATOR REMOVAL & INSTALLATION 19

12 CHARGE AIR COOLER (CAC) LEAKAGE 23

13 COOLING FAN DRIVE MECHANISM 23

13.1 DRIVE PULLEY AND UNIVERSAL JOINT SHAFT 23
13.2 IDLER REPLACEMENT 23

14 VARIABLE SPEED COOLING FAN 24

14.1 LOCKING RADIATOR FAN CLUTCH FOR EMERGENCY OPERATION 25
14.1.1 Electrical Locking 25

14.1.2 Mechanical Locking In Case Of Power Failure 25
14.2 MAINTENANCE 25
14.3 INSPECTION 25
14.4 FAN REMOVAL / INSTALLATION 26

15 FAN RIGHT ANGLE GEARBOX 26

15.1 MAINTENANCE 26
15.2 OIL CHANGE 26
15.3 REMOVAL / INSTALLATION 27

16 COOLING FAN DRIVE BELT 27

16.1 MAINTENANCE 27
16.2 MOUNTING THE DRIVE BELT 27

17 SPECIFICATIONS 29

1 TORQUE TABLES

1.1 HOSE CLAMPS

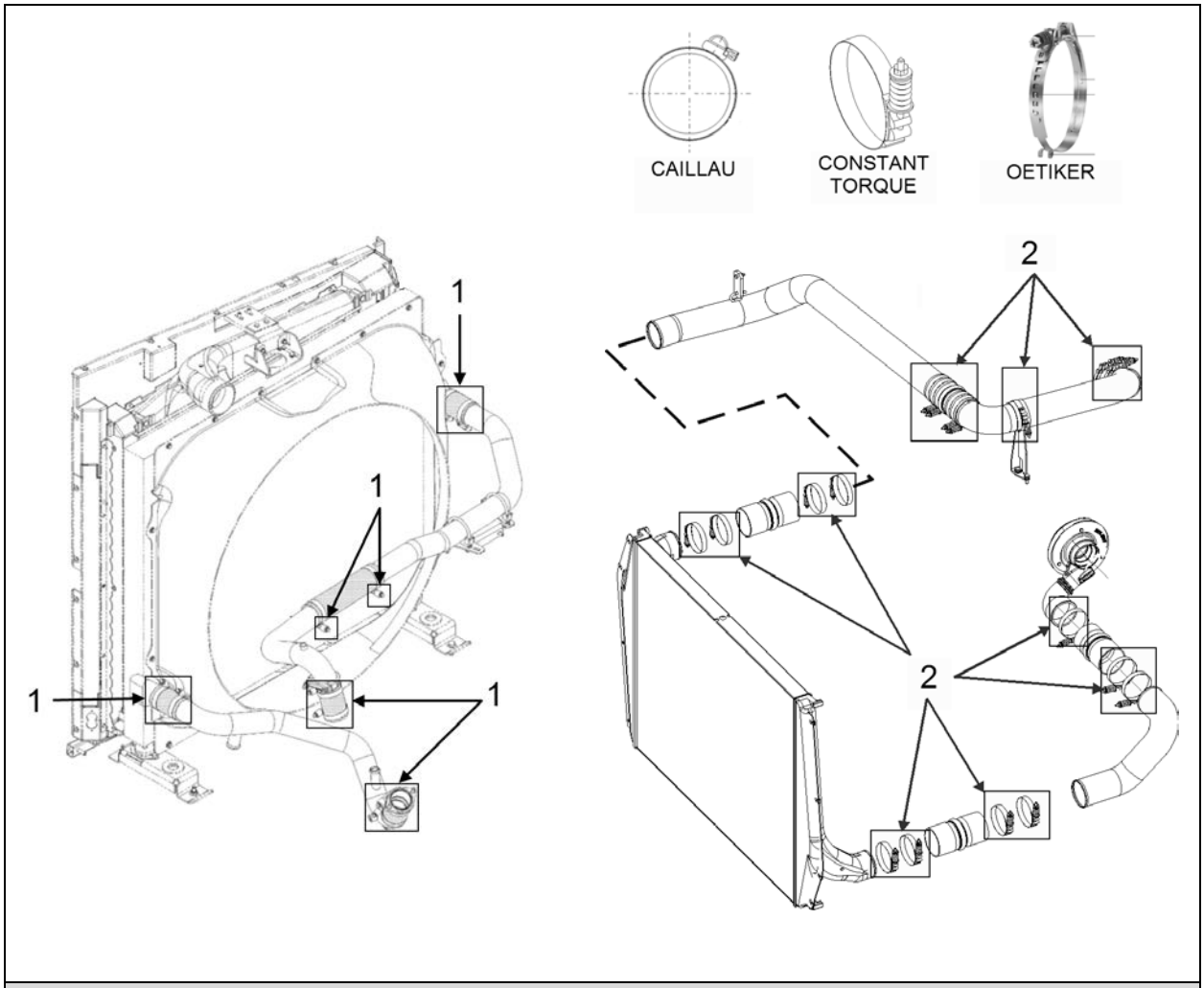

HOSE CLAMPS		
No	DESCRIPTION	TORQUE
1	Constant-Torque hose clamps - coolant lines Oetiker hose clamps – Green spring - coolant lines Oetiker hose clamps – unpainted spring - coolant lines Caillau hose clamps - coolant lines	90-100 lb-in (10-11 Nm) 12-18 lb-in (1.36-2.03 Nm) 8-9 lb-in (0.9-1.02 Nm) 30 lb-in (3.39 Nm)
2	Constant-Torque hose clamps 4.25in - charge air cooler (CAC)	4.5-5.5 lb-ft (6.1-7.46 Nm)

1.2 PULLEY, IDLERS & TENSIONERS

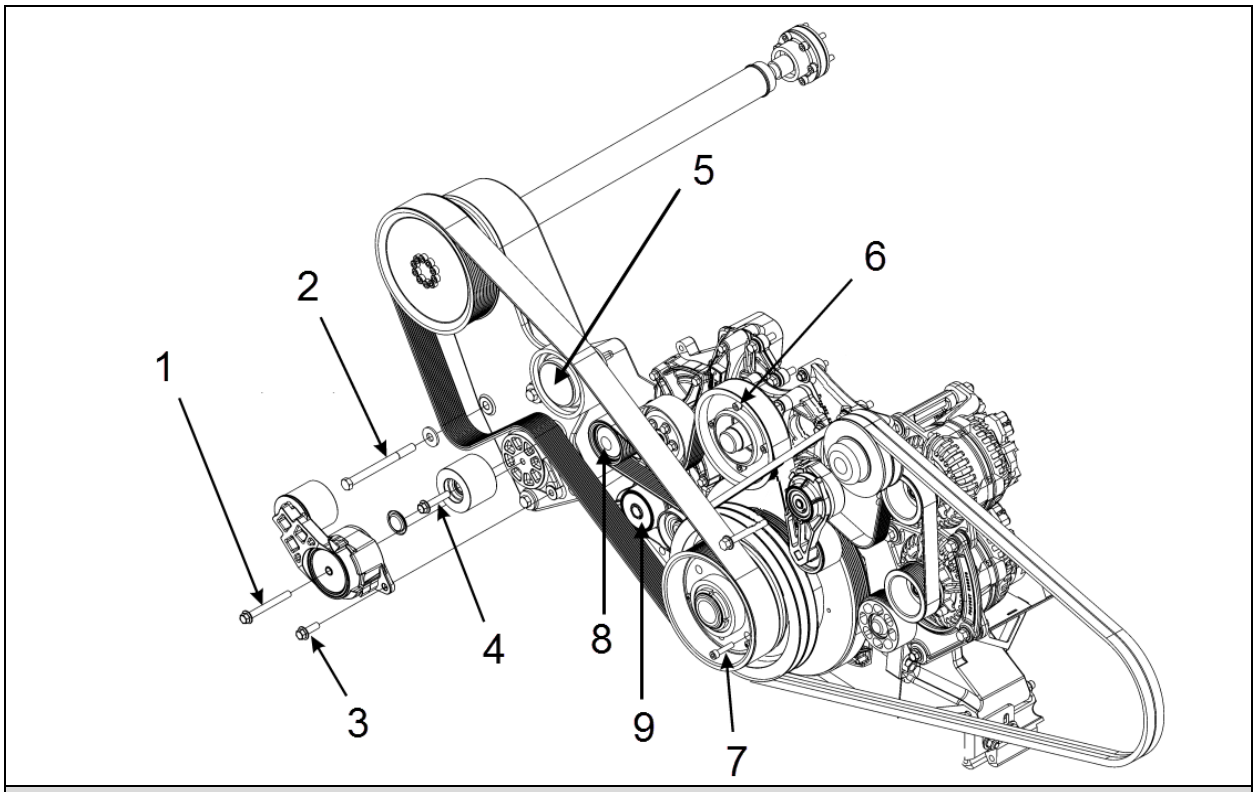

PULLEY, IDLERS & TENSIONERS		
No	DESCRIPTION	TORQUE
1	Automatic belt tensioner bolt – cooling fan drive	32 lb-ft (43 Nm)
2	Fan drive support (casting)	60 lb-ft (81 Nm)
3	Automatic belt tensioner 2nd bolt	32 lb-ft (43 Nm)
4	Idler, cooling fan drive	36-44 lb-ft (49-60 Nm)
5	Upper idler bolt – fan belt	35 lb-ft (47 Nm)
6	Water pump idler pulley bolts	16 lb-ft (22 Nm)
7	Crank pulley bolts – cooling fan	22 lb-ft (30 Nm)
8	Idler bolt – water pump	43 lb-ft (58 Nm)
9	Automatic belt tensioner – water pump	48 lb-ft (65 Nm)

1.3 COOLING FAN DRIVE MECHANISM

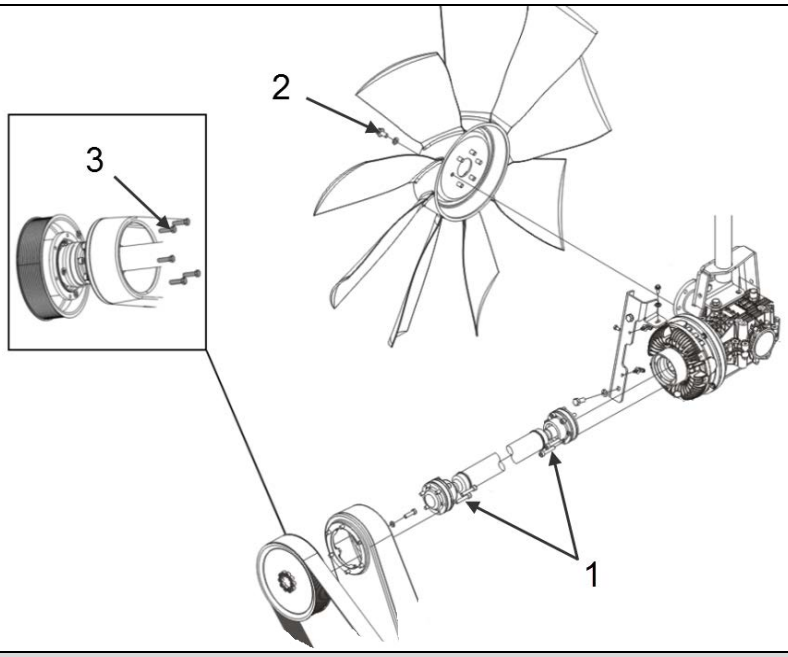

COOLING FAN DRIVE MECHANISM		
No	DESCRIPTION	TORQUE
1	Shaft – universal joint bolts	16-18 lb-ft (22-24 Nm)
2	Fan bolts	32 lb-ft (43 Nm)
3	Fan pulley hub to casting	16 lb-ft (22 Nm)

1.4 RIGHT ANGLE GEARBOX

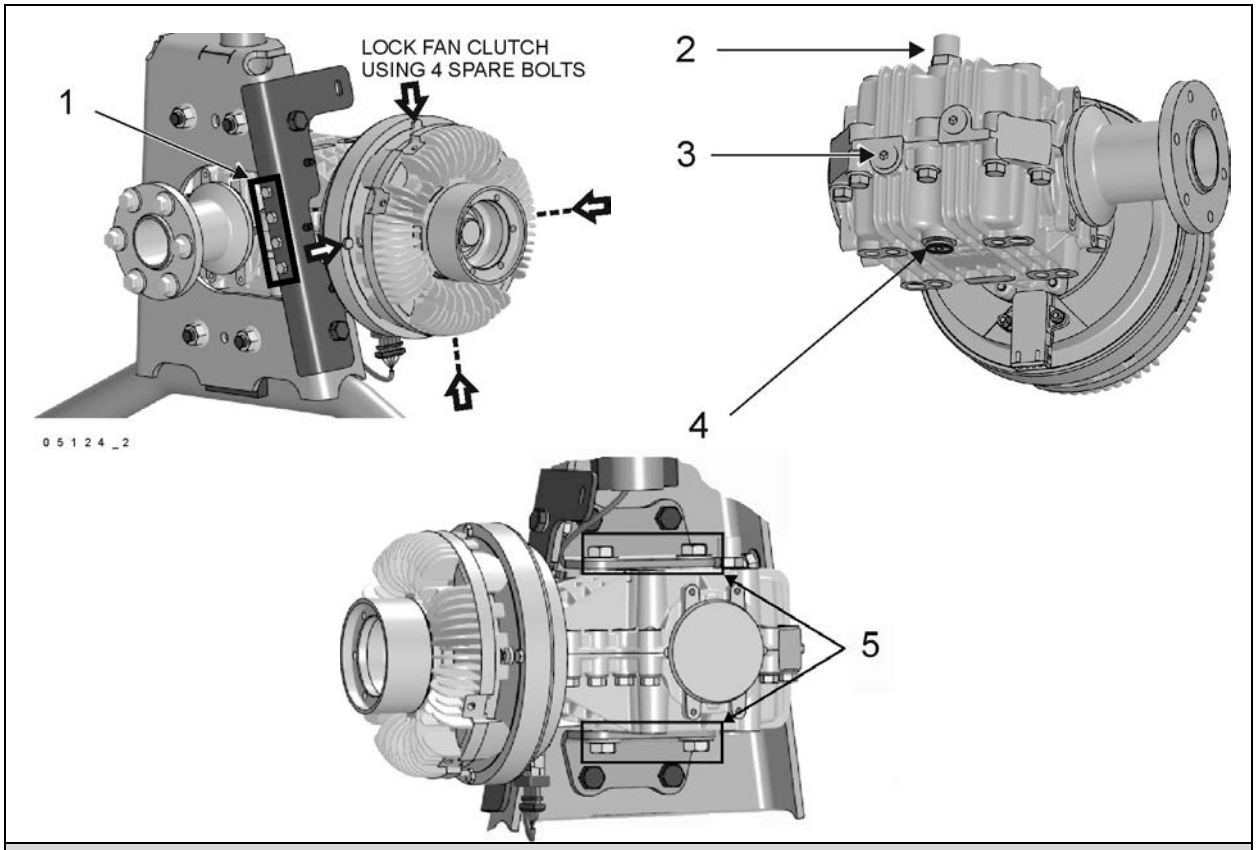

RIGHT ANGLE GEARBOX		
No	DESCRIPTION	TORQUE
1	Spare bolts (when used to lock fan clutch)	7.5 lb-ft (10 Nm)
2	Right angle gearbox - Oil fill plug	5.4-6.6 lb-ft (7.32-8.95 Nm)
3	Right angle gearbox - Oil level plug	24-28 lb-ft (33-38 Nm)
4	Right angle gearbox - Oil drain plug	24-28 lb-ft (33-38 Nm)
5	Right angle gearbox mounting bolts	53-65 lb-ft (72-88 Nm)

1.5 MISCELLANEOUS TORQUES

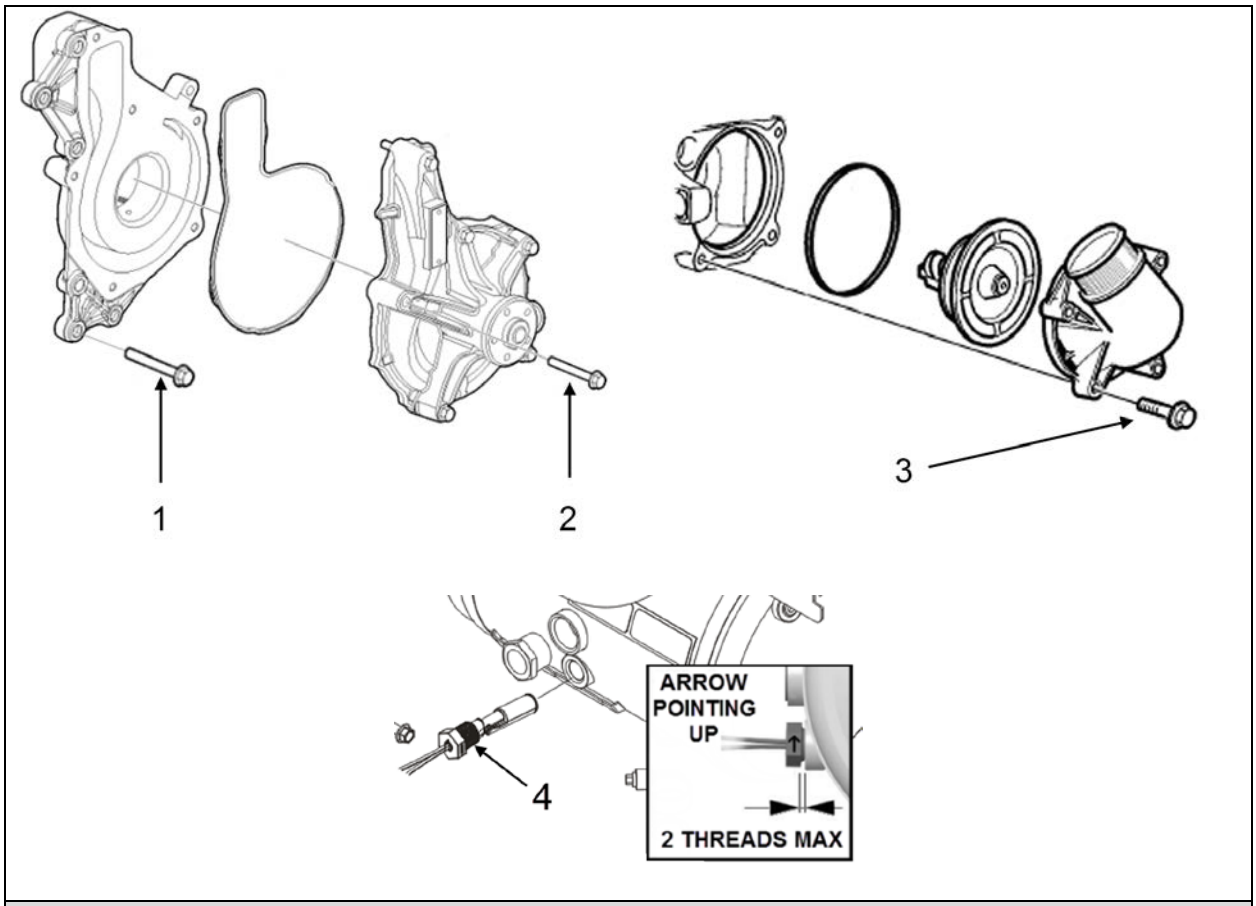

MISCELLANEOUS		
No	DESCRIPTION	TORQUE
1	Water pump - Back cover to engine	29-41 lb-ft (39-56 Nm)
2	Water pump - Body to back cover	15-21 lb-ft (20-28 Nm)
3	Thermostat housing bolts	15-21 lb-ft (20-28 Nm)
4	Coolant level sensor (arrow on side must point up)	2 Threads out MAX*

* Use Teflon – PTFE on thread

2 DESCRIPTION

A radiator and thermo-modulated fan are used to effectively dissipate the heat generated by the engine. A centrifugal-type water pump is used to circulate the engine coolant (Figure 1).

One full blocking-type thermostat is used in the water outlet passage to control the flow of coolant, providing fast engine warm-up and regulating coolant temperature.

The engine coolant is drawn from the lower portion of the radiator by the water pump and is forced through the transmission cooler before going through the oil cooler and the cylinder block.

From the cylinder block, the coolant passes up through the cylinder head and, when the engine is at normal operating temperature, it goes through the thermostat housing and into the upper portion of the radiator. The coolant then passes through a series of tubes where its heat is dissipated by air streams created by the revolving fan and the motion of the vehicle.

Upon starting a cold engine or when the coolant is below normal operating temperature, the closed thermostats direct coolant flow from the thermostat housing through the by-pass tube to the water pump. Coolant is recirculated through the engine to aid engine warm up.

When the thermostat opening temperature is reached, coolant flow is divided between the radiator inlet and the by-pass tube. When the thermostats are completely open, all of the coolant flow is to the radiator inlet.

The cooling system is filled through a pressure & filler cap on the surge tank (Figure 1) the cap is also used to maintain pressure within the system. When system exceeds normal pressure rating (14 psi - 96.53 kPa), the cap releases air and if necessary, coolant through the overflow tube (Figure 1). The thermostat is located in the housing bolted to the engine on the L.H. side.

The engine cooling system also provides hot coolant fluid for the vehicle heating system. Refer to section 22, *"HEATING AND AIR CONDITIONING"* in this manual for information relating to heating system water circulation.

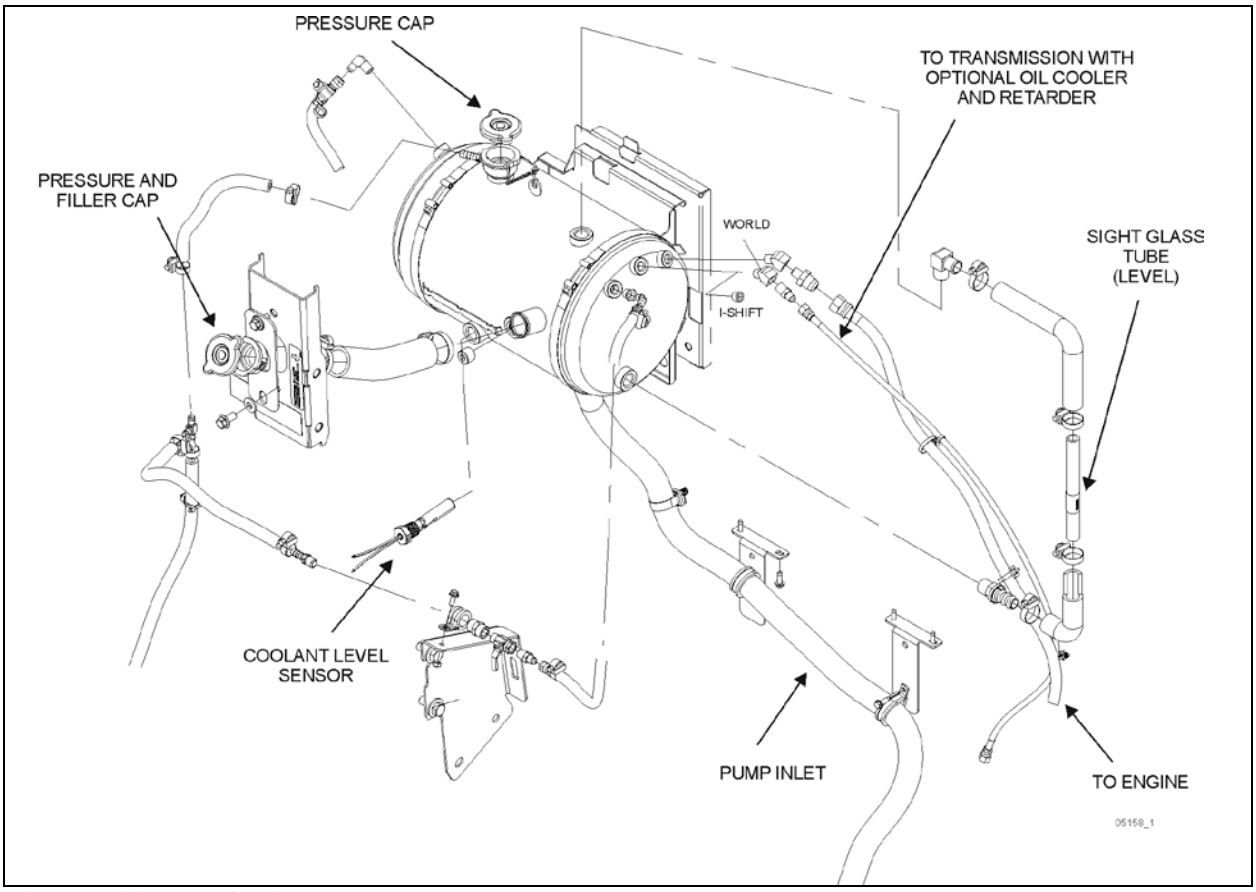

FIGURE 1: COOLANT SURGE TANK

3 MAINTENANCE

3.1 GENERAL RECOMMENDATIONS

A systematic routine inspection of cooling system components is essential to ensure maximum engine and heating system efficiency.

- Check coolant level in the surge tank daily, and correct if required. Test antifreeze strength.
- Check belts for proper tension; adjust as necessary and replace any frayed or badly worn belts.
- Check radiator cores for leaks and make sure the cores are not clogged with dirt or insects. To avoid damaging the fins, clean cores with a low-pressure air hose. Steam clean if required.
- Inspect the water pump operation. A leaky pump sucks in air, increasing corrosion.
- Repair all leaks promptly. Unrepaired leaks can lead to trouble. Inspect and tighten radiator mounts periodically. Test and replace thermostats regularly.

NOTE

In order to ensure the integrity of the system, it is recommended that a periodic cooling system pressure check be made. Pressurize the cooling system to 103-138 kPa (15-20 psi) using Radiator and Cooling System Tester, J24460-1. Do not exceed 138 kPa (20 psi).

Any measurable drop in pressure may indicate a leak. Whenever the oil pan is removed, the cooling system should be pressure checked as a means of identifying any incipient coolant leaks. Make sure the cause of the internal leak has been corrected before flushing the contaminated system.

CAUTION

Hoses and hose connections should be clean and free of oil and grease before hose clamp installation. **Do not use** soap, lubricant or sealing compound on hose connections.

NOTE

For additional information concerning Volvo D13 engine components or engine-related components, consult Volvo Trucks Canada or Volvo Trucks North America Web Site under: Parts & Service. On Volvo web site, you will find detailed service procedures for parts replacement, repair and maintenance.

4 HOSES

Rotten, swollen, and worn out hoses or loose connections are frequent causes of cooling system problems.

Serious overheating is often caused by an old hose collapsing or from rotten rubber shedding from hoses and clogging the coolant passages.

Connections should be inspected periodically and hose clamps tightened. Replace any hose found to be cracked or swollen.

When installing a new hose, clean pipe connections and apply a thin layer of a non-hardening sealing compound. Replace worn out clamps or clamps that pinch hoses.

4.1 HOSE CLAMPS ON COOLANT LINES

All hose clamps used on the heating and cooling systems have a spring function (spring in the housing) to compensate for the normal expansion/contraction of/*a hose and metal connection that occurs during vehicle operation and shutdown. These clamps are worm-driven, made of stainless steel.

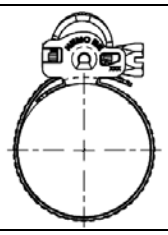

FIGURE 2: CLAMP TYPE USED ON HEATING & COOLING SYSTEMS

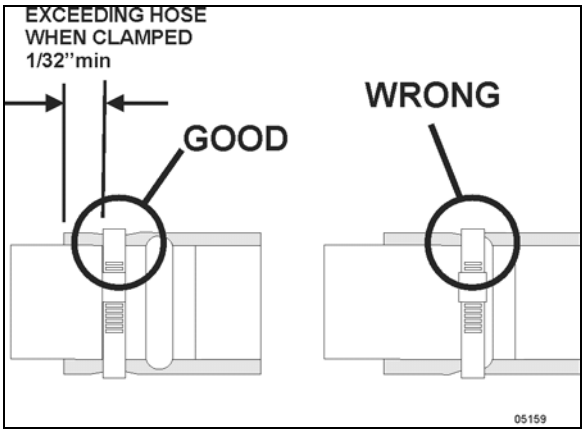

FIGURE 3: PROPER HOSE CLAMP INSTALLATION

All connections equal or greater than of 2-in OD have doubled clamps (two clamps side by side) with screw housing separated from at least 90°. A torque wrench should be used for proper installation. Clamps should be tightened at ambient temperature.

TORQUE: 30 lb-in (3.39 Nm)

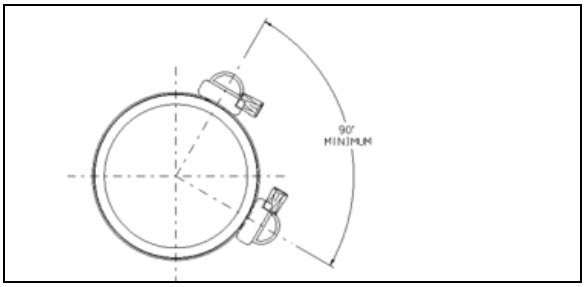

FIGURE 4: DOUBLED CLAMP POSITIONING

CAUTION

Do not over-tighten, especially during cold weather when hose has contracted.

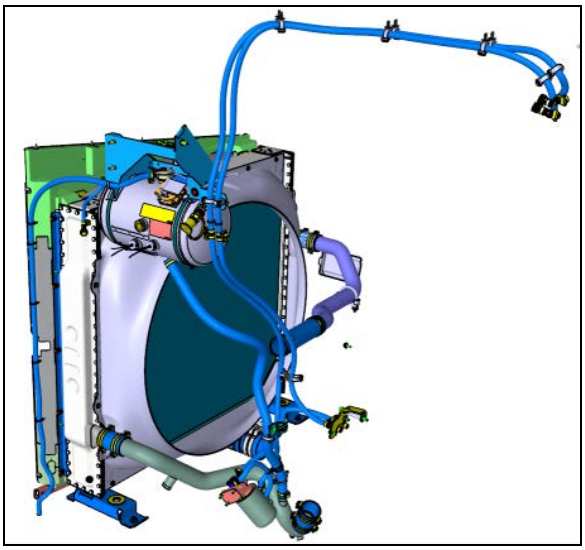

FIGURE 5: COOLANT FLOW TO RADIATOR (VOLVO D13)

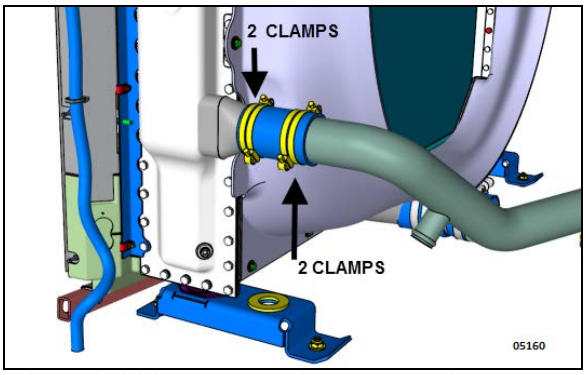

FIGURE 6: COOLANT LINE TO THE RADIATOR

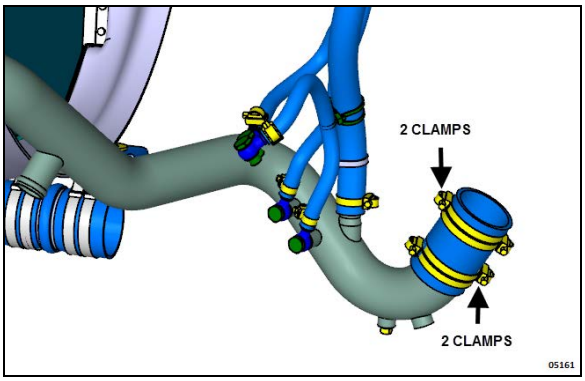

FIGURE 7: COOLANT LINE CONNECTED TO PUMP OUTLET

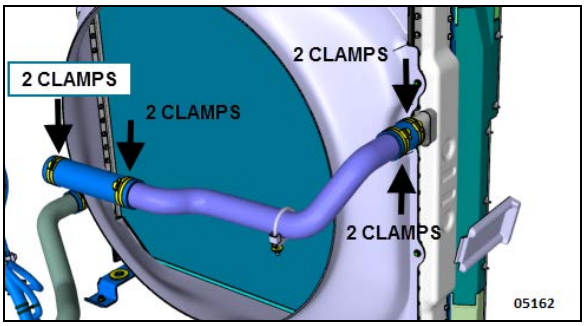

FIGURE 8: COOLANT LINE AT THE RADIATOR OUTLET

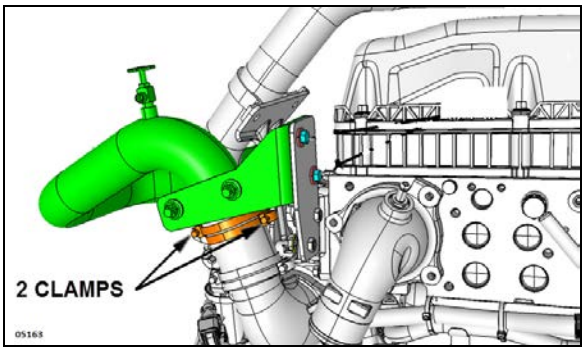

FIGURE 9: COOLANT LINE AT PUMP INLET

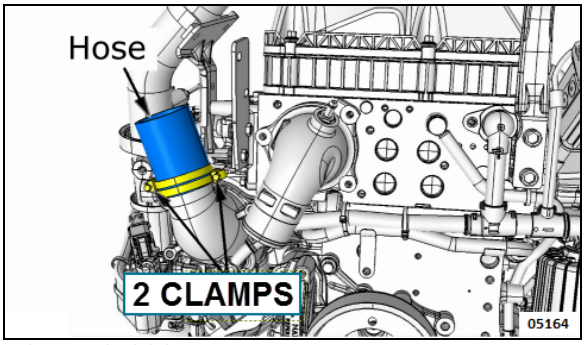

FIGURE 10: COOLANT LINE AT PUMP INLET

4.1.1 Oetiker Screw Clamps

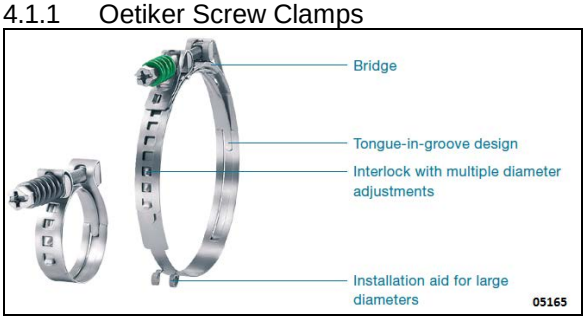

FIGURE 11: OETIKER CLAMP (image: oetiker)

Assembly recommendations

1. Turn screw anti-clockwise until it stops at the "D" nut.
2. For radial installation or change of diameter, unlatch the interlock.
3. Position the open clamp around the hose. Locate the tongue in the groove and position the apertures of the mechanical interlock over the mating features. Engage the interlock at the smallest possible diameter.
4. Tighten the screw to the required torque:
   - Spring without color identification

     TORQUE: 8-9 lb-in (0.9-1.02 Nm)
   - Green spring

     TORQUE: 12-18 lb-in (1.36-2.03 Nm)
5. A gap of 3 mm should exist between the D-nuts. This ensures that there is sufficient movement for the clamp to reduce in diameter when the spring of the self-tensioning clamp expands during contraction of the hose. If the gap between the D-nuts is less than the recommended 3 mm, proceed to step 6.

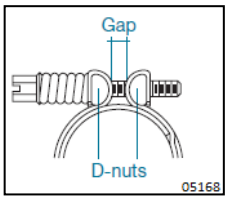

6. Turn the screw anti-clockwise to loosen the Self-Tensioning Screw Clamp.
7. Relocate the interlock in the next smaller diameter position.
8. Tighten the screw to the required torque.

4.2 CONSTANT-TORQUE HOSE CLAMPS ON CHARGE AIR COOLER (CAC) SYSTEM

If for any reason hose clamps need to be replaced; install and tighten hose clamps to specified torque (dry) (Figure 12).

TORQUE: 4.5-5.5 lb-ft (6.1-7.46 Nm)

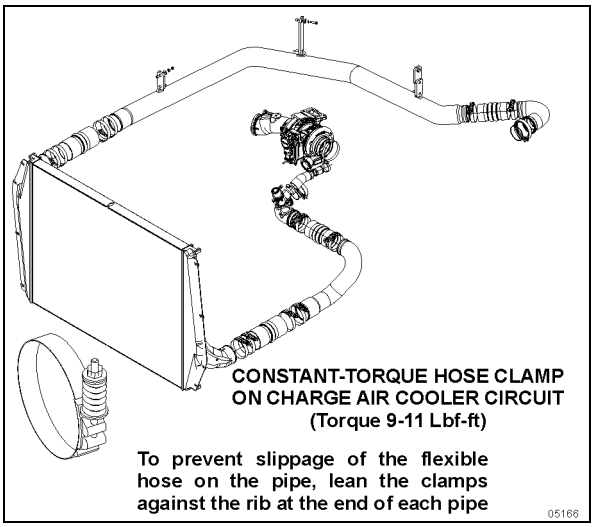

FIGURE 12: CHARGE AIR COOLER HOSE CLAMPS

CAUTION

The hose clamps will break if over-tighten. Do not over-tighten, especially during cold weather when hose has contracted.

Maintenance

Since the constant-torque clamp automatically adjusts to keep a consistent sealing pressure, there is no need to re-torque hose clamps on a regular basis. During vehicle operation and shutdown, the screw tip will adjust according to the temperature and pressure changes.

Checking for proper torque should be done at room temperature.

5 THERMOSTAT OPERATION

5.1 THERMOSTAT REPLACEMENT

1. Drain the cooling system.
2. Remove the bolts, the thermostat housing and the thermostat. Carefully clean the thermostat seat and all cylinder head-to-thermostat housing mating surfaces.

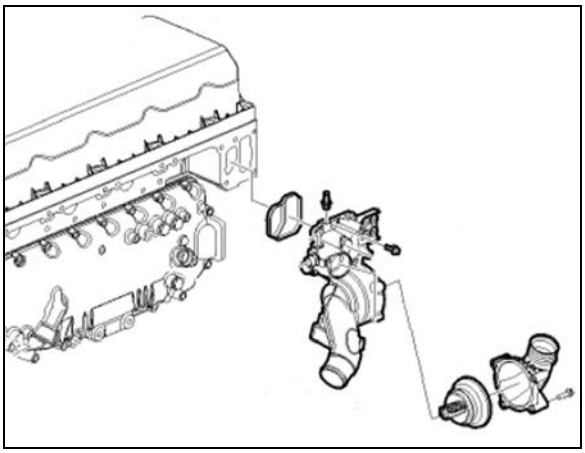

FIGURE 13: VOLVO D13 THERMOSTAT HOUSING

3. Install the new thermostat. Make sure that the rubber seal remains properly seated.
4. Position the thermostat housing to the cylinder head, install and tighten the bolts.

TORQUE: 15-21 lb-ft (20-28 Nm)

5. Install the rubber radiator hose to the thermostat housing. Position the clamp and tighten to secure.
6. Fill the system with the recommended coolant.
7. Start the engine, check for leaks and proper operation. After shutdown, replenish fluids as necessary.

5.2 CHECKING THERMOSTAT

A function check must be carried out before installing a new thermostat.

NOTE

Check to be sure that the thermostat closes fully. This can be done by holding it up to the light to check that there is no visible gap at the opening point. If the thermostat does not close properly, replace it.

1. Warm up water in a receptacle to 75°C (167°F) and immerse the thermostat in the water. Use a piece of wire attached to the thermostat.
2. After at least 30 seconds, check that the thermostat is still closed.

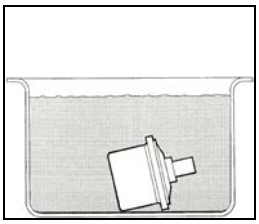

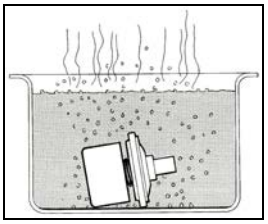

3. Now warm the water to 100°C (212°F). After at least 30 seconds at the boiling point, check that the thermostat has opened at least 7mm (9/32in). If the thermostat has not opened, it must be replaced. A good thermostat starts to close at 95°C (203°F) and is fully closed at approximately 85°C (185°F).

6 COOLANT

6.1 COOLANT LEVEL VERIFICATION

Coolant level is correct when coolant reaches the middle of the surge tank sight glass when cold (ambient temperature). Fill the tank as necessary with the same 50/50 water-antifreeze mixture normally used. Do not mix two different types of coolant.

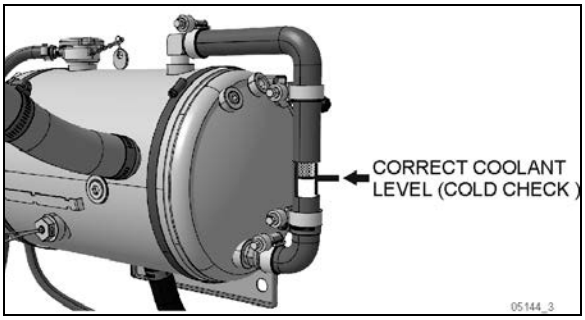

FIGURE 14: SURGE TANK IN ENGINE COMPARTMENT

WARNING

Hot engine coolant is under high pressure. Allow engine to cool down before adding coolant.

6.2 COOLANT LEVEL SENSOR

This warning device consists of a fluid level probe mounted on the surge tank. The probe sends a signal to the engine control module to indicate coolant level. If the coolant level drops below the probe, the *"Check Engine"* light flashes and a diagnostic code is registered (see section 01*" ENGINE"*).

CAUTION

Do not run engine with the “Check Engine” light flashing.

The level probe is mounted on the front of the surge tank.

6.3 THAWING COOLING SYSTEM

If the cooling system becomes frozen solid, place the coach in a warm area until the ice is completely thawed. Under no circumstances should the engine be operated when the cooling system is frozen, as it will result in engine overheating due to insufficient coolant.

Once thawed, check engine, radiator and related components for damage caused by expansion of frozen coolant fluid.

6.4 COOLANT RECOMMENDATIONS FOR VOLVO D13 ENGINE

The coolant provides a medium for heat transfer and controls the internal temperature of the engine during operation. In an engine having proper coolant flow, some of the combustion heat is conveyed through the cylinder walls and the cylinder head into the coolant. Without adequate coolant, normal heat transfer cannot take place within the engine, and engine temperature rapidly rises.

To function properly, the cooling system must be pressurized to prevent localized boiling of coolant. The system must be kept clean and leak-free. The filler and pressure caps must be checked periodically for proper operation.

Always maintain cooling system at the proper coolant level. Check daily, use recommended *extended life coolant* (ELC) with *50/50 antifreeze and deionized water mixture ratio.* This ratio should be used year-round to provide freeze and boil-over protection as well as providing a stable environment for seals and hoses.

When topping up coolant, use the same coolant mixture type as the mixture already in the cooling system. Do not mix two different types of coolant.

Do not use antifreeze formulated for automobile gasoline engines, these have a very high silicate content that will clog the radiator and leave unwanted deposits in the engine.

A decal located on the surge tank provides information on recommended coolants.

CAUTION

On Volvo D13 engine, use **only** Extended Life Coolant (ELC). **Do not** add supplemental coolant additives (SCA) to extended life coolant. **Do not** use a coolant filter containing Supplemental Coolant Additives (SCA).

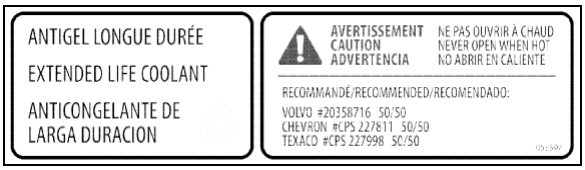

Recommended coolants for Volvo D13 engine:

- Texaco CPS#227998 (pre-diluted 50/50 mixture);
- Chevron CPS#227811 (pre-diluted 50/50 mixture);
- Volvo 20358716 (pre-diluted 50/50 mixture)

The ELC coolant slow depleting additive chemistry does not require regular testing, but the coolant can be tested with a *FleetFix® Maintenance Test Strip* (to measure nitrite and carboxylate levels*) and the FleetFix® Dilution Test Kit* (to determine contamination and protection levels of the ELC coolant).
The freeze protection level should be checked at least twice a year using a coolant refractometer.

CAUTION

Extended Life Coolant (ELC) will test as out of additives (SCA), but SCA should not be added. Shortened engine life may be the result of adding SCA.

6.5 COOLANT SAMPLING

Providing a sample of coolant for lab analysis may be required at some point in the life of the vehicle.

WARNING

Before proceeding with the following steps, make sure the coolant has cooled down. The sudden release of pressure from a heated cooling system can result in loss of coolant and possible personal injury (scalding) from the hot liquid. Sampling should be performed on a *cold engine*.

NOTE

The following procedure is provided for reference only. Instructions coming with the laboratory test kit take precedence over this procedure.

Typical material required:

- Hand Vacuum Pump w/ bottle provision

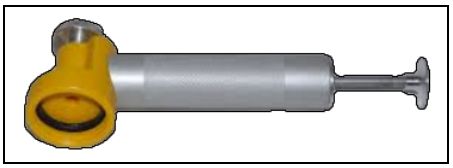

- Sample bottle
- Plastic tube (1/4 “refrigerator” tube)
- Nitrile gloves
- Security glasses
- Shop Towels

NOTE

Watch out for accidental contamination!

Hand vacuum pump should be used for coolant sampling only *to prevent cross-contamination.*

Also, ensure cleanliness throughout this procedure to make sure the coolant sample is not contaminated accidentally.

Sampling should be performed on the surge tank, on a cold engine.

If the vehicle has been standing still for a significant period, drive it around 30 min up to normal operating temperature. Then let it cool down.

1. Pull the pressure cap off the surge tank. Refer to Figure 1for location of cap.
2. Thread the sample bottle to the pump. Hand tightens.
3. Slide the plastic tubing in the fitting on the pump until it exceeds about 1/2 inch into pump cavity.
4. Insert tube in the surge tank about half way to the bottom. (Do not draw sample in the bottom of the surge tank.)
5. Pump until sample bottle is about 2/3 full. Do not overfill.

6. Loosen pump fitting to remove tube from pump. Allow any coolant in the tube to flow in the bottle.
7. Remove sample bottle and install cap.
8. Throw plastic tube away. (Not to be re-used)
9. Complete any forms required by the laboratory.

7 DRAINING COOLING SYSTEM

Use the following procedures to drain the cooling system partially or completely.

To drain engine and related components:

1. Stop engine and allow engine to cool. Close both heater line shut-off valves.

One valve is located in the engine compartment near the water pump (Figure 15). Another valve is located behind rear fender, above the L.H. rear wheelhousing near the optional coolant heater.

NOTE

Refer to section 22 under "Preheating System" for information about preheater access and heater line shutoff valve.

MAINTENANCE

Cooling system

Drain, flush, thoroughly clean and refill the system at the intervals specified by the Lubrication And Servicing Schedule in Section 24: LUBRICATION & SERVICING.

When using ELC, **do not** use a filter that contains Supplemental Coolant Additives (SCA).

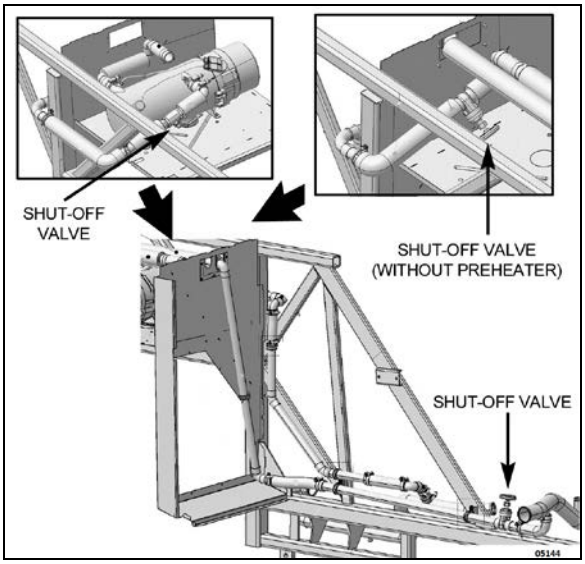

FIGURE 15: HEATER LINE SHUTOFF VALVES

WARNING

Before proceeding with the following steps, make sure the coolant has cooled down. The sudden release of pressure from a heated cooling system can result in loss of coolant and possible personal injury (scalding) from the hot liquid.

2. Close the shut-off valve on the coolant filter mounting head and remove filter (perform only if filter as to be replaced).
3. Open the shut-off valve on the coolant filter mounting head and drain the coolant into a suitable container. Close the shut-off valve.
4. Unscrew the surge tank pressure cap counterclockwise, ¼ turn to let air enter the system and permit the coolant to drain completely from system.
5. Connect coolant extractor (Figure 16). Use coolant extractor to drain the coolant from the engine. An alternate method is to drain the coolant into a suitable container using the drain hose.

WARNING

Coolant is toxic; risk of poisoning. Do not drink coolant. Use proper hand protection when handling. Keep coolant out of reach of children and animals. Failure to follow these precautions can cause serious illness or death.

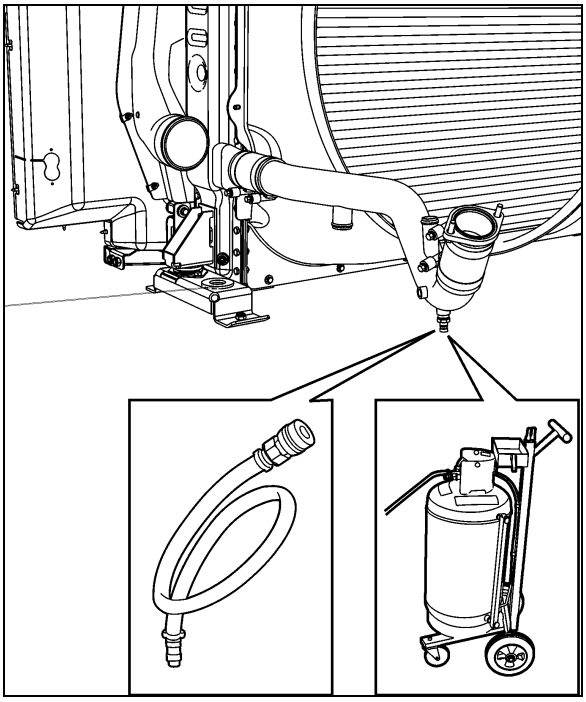

FIGURE 16: EXTRACTING COOLANT 05093

6. Open the radiator drain cock.
7. Remove the transmission oil cooler. Drain, flush and inspect. Refer to Section 7, “TRANSMISSION” for oil cooler maintenance or preventive replacement.

CAUTION

Drain water pump completely before extended storage to avoid possible water pump damage.

If freezing weather is anticipated and the engine is not protected with antifreeze, drain the cooling system completely when vehicle is not in use. Trapped water in the cylinder block, radiator or other components may freeze and expand resulting in damages. Leave the drain plugs open until the cooling system can be filled with coolant fluid. Do not run engine with cooling system empty.

To drain the entire system, do the previous steps while maintaining the shutoff valves in the open position; then follow the procedure under *“Draining Heating System”* in Section 22.

8 FILLING COOLING SYSTEM

If only the engine and related components were drained, maintain the two heater line shutoff valves in their closed position, then proceed as follows:

1. Close radiator drain cock.
2. Open the shut-off valve on the coolant filter mounting head.
3. Refill cooling system from the surge tank filler cap inlet with the recommended ethylene glycol-based antifreeze and water solution of the required concentration using the coolant extractor.

NOTE

Make sure the purge lines are properly connected and not obstructed. The purge lines (thermostat housing dome, radiator top tank, transmission oil cooler or delivery line) are required to ensure complete engine fill and proper purging of air in the system.

NOTE

The coolant level should remain within two inches of the surge tank filler neck.

4. Install the filler and pressure cap, then start the engine and run it at fast idle until reaching normal operating temperature. Check for leaks.

NOTE

If for any reason, the coolant level drops below the surge tank level probe, the Check Engine warning light will illuminate.

5. Stop engine and allow cooling.
6. Open the two heater line shutoff valves, check the coolant level in the surge tank, and then add as required.

CAUTION

Never pour cold coolant into a hot engine. The sudden change in temperature may crack the cylinder head or block.

If the entire system has been drained, redo the previous steps while maintaining the two heater

line shutoff valves in the "Open" position. With engine running, activate the driver's and central heating systems to permit coolant circulation. If the vehicle is equipped with a windshield upper section defroster, momentarily pinch the hose located between the recirculating pump suction and the defroster outlet connector to ensure windshield upper section defroster complete filling. Complete the procedure by bleeding the heater cores as explained in Section 22, under *"9.4 Bleeding Heating System".*

9 FLUSHING

If the cooling system is contaminated, flush the cooling system as follows:

1. Drain the coolant from the engine.
2. Refill with clean water.

CAUTION

If the engine is hot, fill slowly to prevent rapid cooling and distortion of the engine castings.

3. To thoroughly circulate the water, start and run the engine for 15 minutes after the thermostats have opened.
4. Fully drain system.
5. Refill with clean water and operate for 15 minutes after the thermostats have opened.
6. Stop engine and allow cooling.
7. Fully drain system.

Vehicles without coolant filters:

Fill with a 50/50-antifreeze/water solution and add required inhibitors.

Vehicles with coolant filters:

Fill with a 50/50-antifreeze/water solution. Replace coolant filter as per the Lubrication and Servicing Schedule in section 24 if required.

Dispose of spent fluids in an environmentally responsible manner according to regulations in effect in your area.

COOLING SYSTEM CAPACITY (approximation)

Includes heating system: 27 US gal (102 liters)

9.1 COOLING SYSTEM DESCALERS

If the engine overheats and the water pump, coolant level and thermostat operation have been found to be satisfactory, it may be necessary to flush and de-scale the cooling system.

1. Drain the coolant from the engine.
2. Fill system with clean water.
3. Add the required amount of a reputable commercially available de-scaling product (aluminum & copper compatible). It is important that product directions be thoroughly read and followed regarding duration of the treatment, temperature and product mix ratio).

CAUTION

Only use de-scaling products sold by a reputable manufacturer, product must be aluminum and copper compatible and must be safe for rubber hoses and gaskets.

Some de-scaling products will require the use of a neutralizing agent before coolant system refill

Carefully follow manufacturer's directions to avoid cooling system damage when using descaling products.

Never use "home brewed" descaling solution containing caustic or acid products not intended for cooling system descaling or having unknown active product concentration.

4. Drain descaling solution from the cooling system.
5. Refill with clean water and carefully rinse the cooling system to completely evacuate all remaining descaling solution.
6. On heavily contaminated system, reverse flush the cooling system to prevent remaining dirt and scale deposits from clogging the radiator tubes or being forced through the water pump (refer to paragraph 9.2 *Reverse Flushing* below).
7. Flush the system.
8. Refill system with appropriate coolant.

9.2 REVERSE FLUSHING

After the engine and radiator have been thoroughly de-scaled, they should be reverse-flushed. The water pump should be removed and the radiator and engine reverse-flushed separately to prevent dirt and scale deposits from clogging the radiator tubes or being forced through the pump. Reverse flushing is accomplished by hot water, under pressure, being forced through the cooling system in a direction opposite to the normal flow of coolant, loosening and forcing deposits out.

The radiator is reverse flushed as follows:

1. Remove the radiator inlet and outlet hoses and replace existing radiator cap with a new one.
2. Attach a hose to the top of the radiator to lead water away from the engine.
3. Attach a hose at the bottom of the radiator and insert a flushing gun in the hose.
4. Connect the water hose of the gun to the water outlet and the air hose to the compressed air outlet.
5. Turn on the water and when the radiator is full, turn on the air in short blasts, allowing the radiator to fill between blasts.

NOTE
Apply air gradually. Do not exert more than 138 kPa (20 psi) air pressure. Too great a pressure may rupture a radiator tube.

6. Continue flushing until only clean water is expelled from the radiator.

The cylinder block and cylinder head water passages are reverse flushed as follows:

1. Remove the thermostats and the water pump.
2. Attach a hose to the water inlet of oil cooler housing to drain water away from engine.
3. Attach a hose to the water outlet at the top of the cylinder head (thermostat housing) and insert the flushing gun in the hose.
4. Turn on the water until the jackets are filled, and then turn on the air in short blasts. Allow jackets to fill with water between air blasts.
5. Continue flushing until the water from the engine runs clean.

If scale deposits in the radiator cannot be removed by chemical cleaners or reverse flushing as outlined above, it may be necessary to remove the upper tank and rod out the individual radiator tubes with flat steel rods. Circulate the water through the radiator core from the bottom to the top during this operation.

10 SPIN-ON COOLANT FILTER

The optional engine cooling system filter is used to filter out impurities such as scale or sand from the coolant. The filter is mounted onto the cooling fan drive mechanism aluminum casting (Figure 17).

To replace a filter:

1. Close the filter shut-off valve on the filter mounting head and unscrew the old filter from mounting.

WARNING
Failure to relieve cooling system pressure may result in personal injury.

2. Remove and discard the filter. Recover the coolant remaining in the filter with a suitable container.
3. Clean the filter adapter with a clean, lint-free cloth.
4. Coat surface of gasket with clean antifreeze, tighten 2/3 to 1 turn after gasket makes contact with head.
5. Open the filter shut-off valve.
6. Start engine and check for leaks. After shutdown, replenish fluid as necessary.

CAUTION
Do not exceed recommended service intervals.

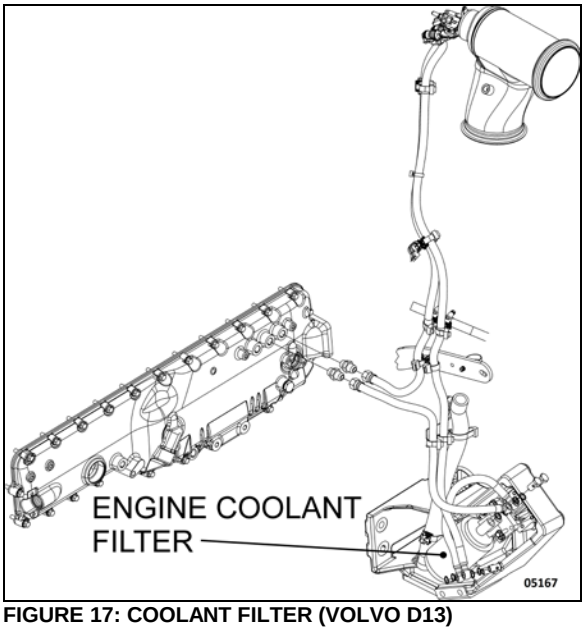

FIGURE 17: COOLANT FILTER (VOLVO D13)

MAINTENANCE

Coolant filter

Replace the coolant filter cartridge at the intervals specified by the Lubrication And Servicing Schedule in Section 24: LUBRICATION & SERVICING.

11 RADIATOR

The radiator is mounted at the L.H. side of engine compartment. It is designed to reduce the temperature of the coolant under all operating conditions. It is essential that the radiator core be kept clean and free from corrosion and scale at all times.

11.1 MAINTENANCE

MAINTENANCE

Inspect the exterior of the radiator core at the intervals specified by the Lubrication And Servicing Schedule in Section 24: LUBRICATION & SERVICING. Clean with a quality grease solvent, such as a mineral spirits and dry with compressed air. Do not use fuel oil, kerosene, gasoline, or any caustic material. It may be necessary to clean the radiator more frequently if the vehicle is operated in extremely dusty or dirty areas. Refer to coolant system flushing and reverse flushing in this section for maintenance of radiator interior.

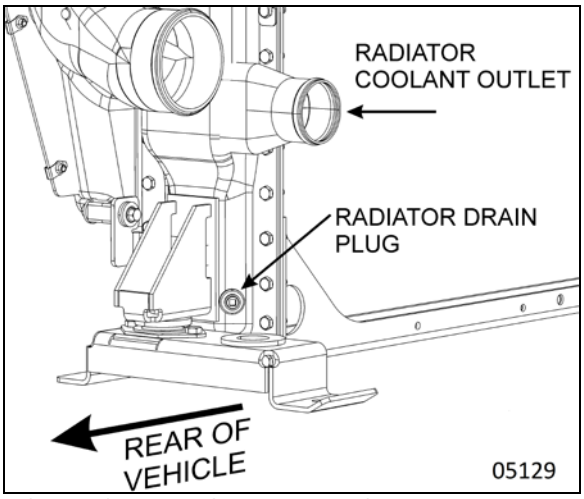

FIGURE 18: RADIATOR DRAIN PLUG

11.2 RADIATOR REMOVAL & INSTALLATION

1. Apply the parking brake and shift the transmission to neutral. Shut off all electrical loads. Turn the ignition key to the OFF position.

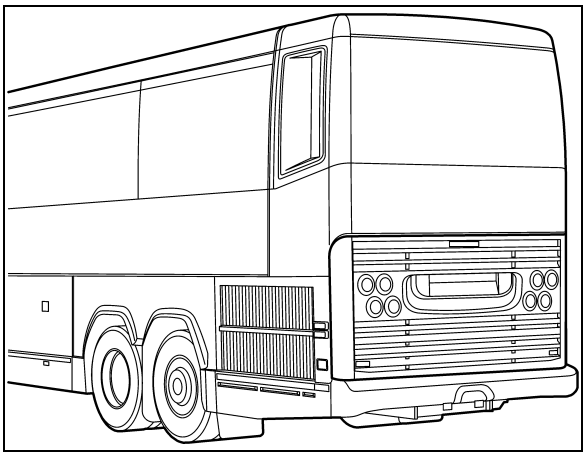

FIGURE 19: ENGINE COMPARTMENT DOOR

2. Open engine compartment door (Figure 19).
3. Set starter selector switch to the OFF position (Figure 20).

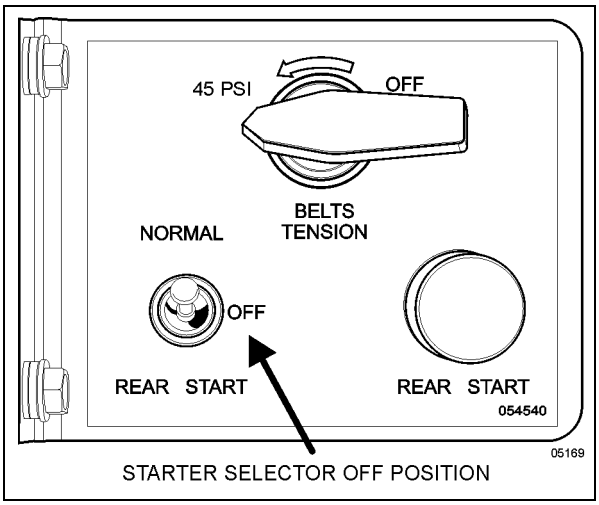

FIGURE 20: REAR START PANEL

4. Connect coolant extractor (Figure 16). Use coolant extractor to drain the coolant from the engine. An alternate method is to drain the coolant into a suitable container using the drain hose.

DANGER

Coolant is toxic; risk of poisoning. Do not drink coolant. Use proper hand protection when handling. Keep coolant out of reach of children and animals. Failure to follow these precautions can cause serious illness or death.

5. Remove L.H. side rear fender (Figure 21).

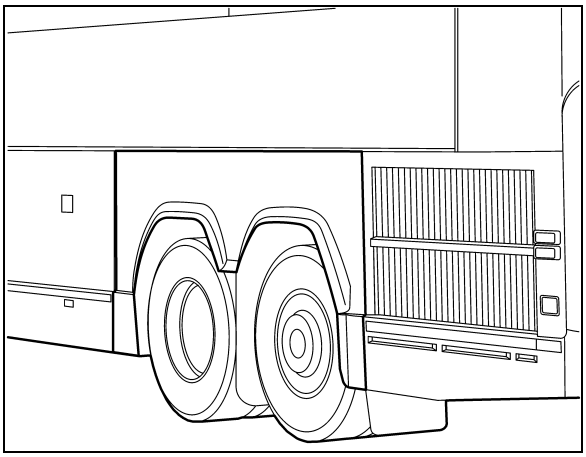

FIGURE 21: L.H. SIDE REAR FENDER

6. Remove tag axle L.H. side wheel.
7. Unfasten cap screws and remove access panel located behind tag axle L.H. side wheel (refer to Figure 22).

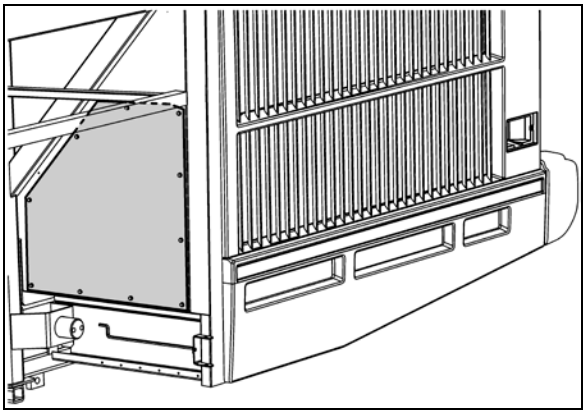

FIGURE 22: ACCESS PANEL BEHIND TAG AXLE WHEEL

8. Open radiator door to access radiator assembly. Unfasten upper arm assembly (Figure 23).

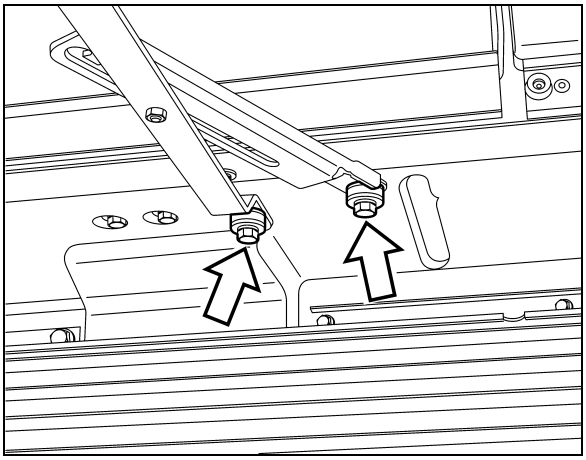

FIGURE 23: UPPER ARM ASSEMBLY

9. Remove radiator sealing frame (Figure 24).

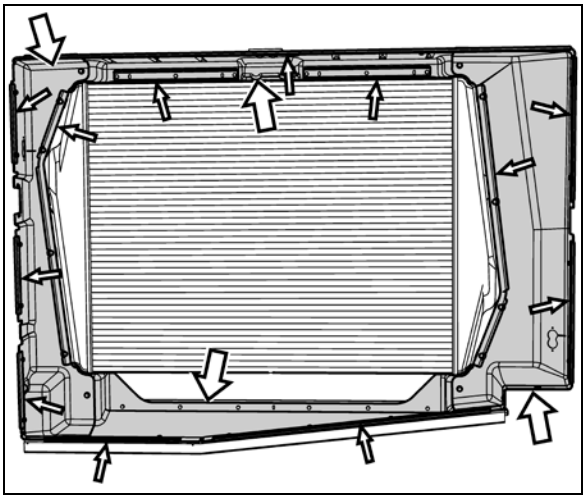

FIGURE 24: RADIATOR SEALING FRAME

10. Remove clamps and then break hoses from the front coolant and charge air pipes (Figure 25).

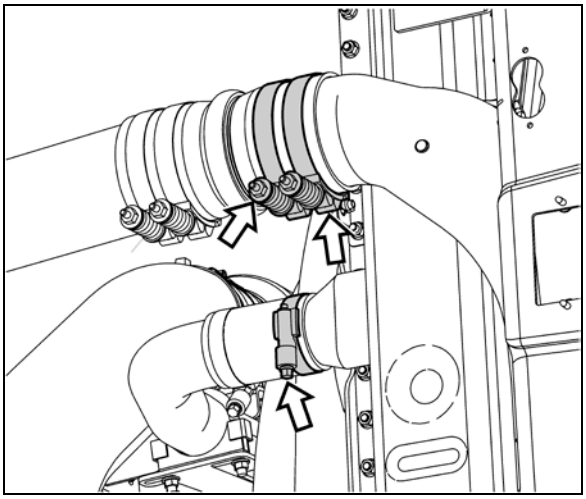

FIGURE 25: FRONT COOLANT & CHARGE AIR PIPES

11. Remove rear coolant and charge air hose clamps then break hoses loose (Figure 26).

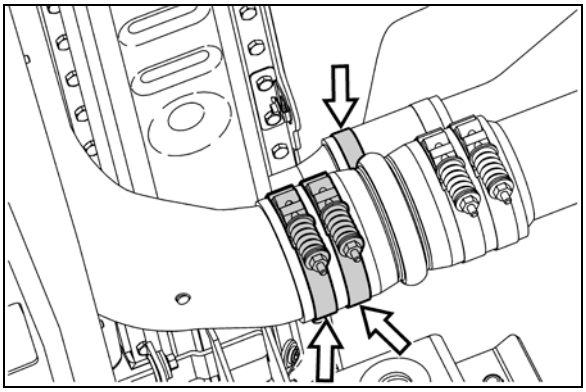

FIGURE 26: REAR COOLANT & CHARGE AIR PIPES

12. Remove the upper radiator assembly support bracket (Figure 27).

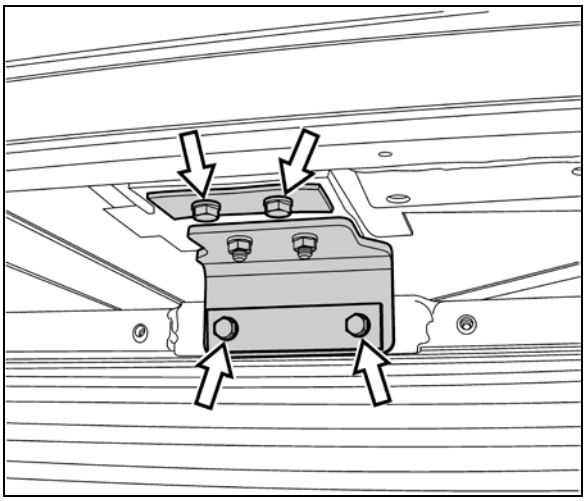

FIGURE 27: UPPER RADIATOR ASSY SUPPORT BRACKET

13. Remove the lower radiator assembly tube protector from the lower section (Figure 28).

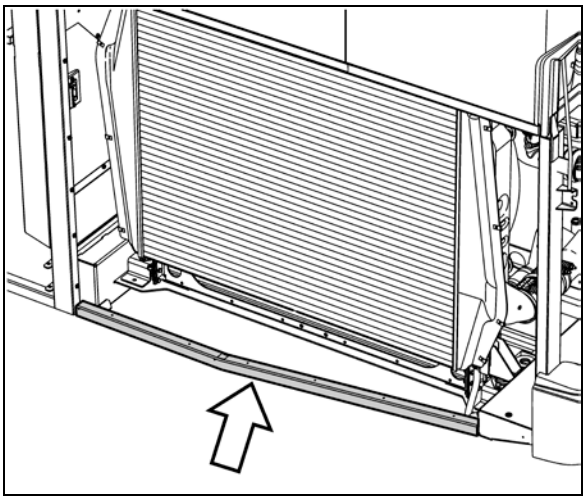

FIGURE 28: LOWER RADIATOR ASSY TUBE PROTECTOR

14. Remove all lower radiator assembly mounting fasteners.

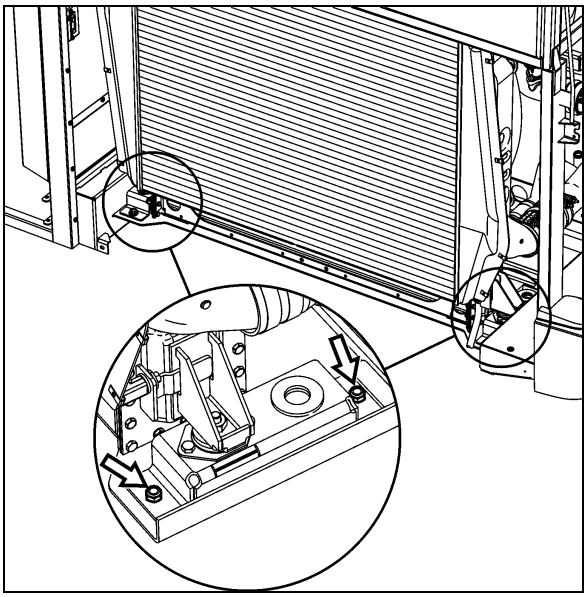

FIGURE 29: RADIATOR ASSEMBLY LOWER MOUNTING FASTENERS

15. Cut cable tie and disconnect electrical connector from fan clutch. Remove fan drive shaft fasteners at the gear box.

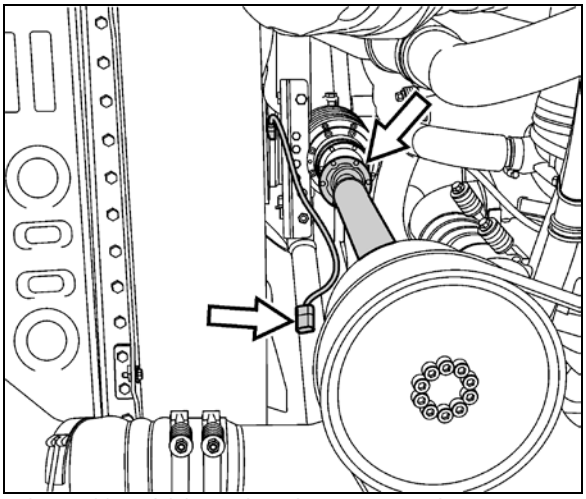

FIGURE 30: DISCONNECTING FAN DRIVE SHAFT

16. Position a forklift under the radiator assembly that is capable of safely lifting the radiator.

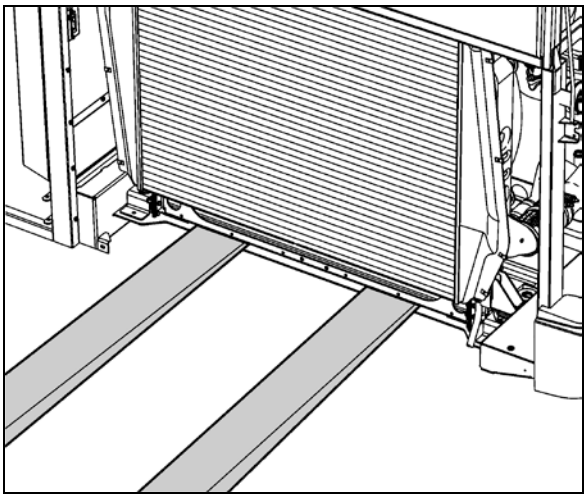

FIGURE 31: POSITIONING FORKLIFT

17. With assistance, slide radiator assembly out and onto the forklift. Transfer radiator assembly to a secure location.
18. Separate charge air cooler from radiator (Figure 32).

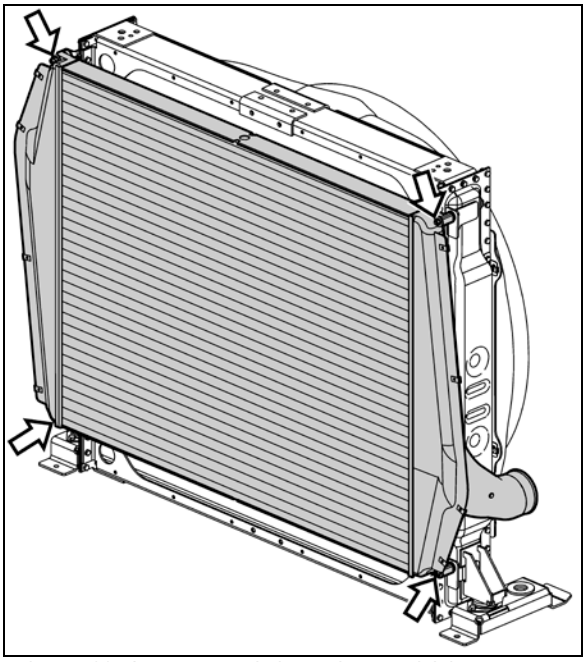

FIGURE 32: SEPARATING CHARGE AIR COOLER

19. Lay radiator face down. Remove the fasteners that connect lower radiator mounts to radiator.

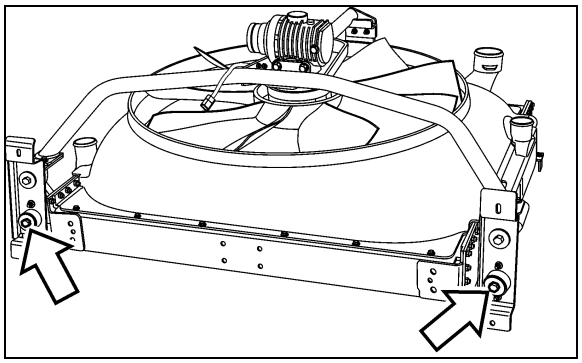

FIGURE 33: REMOVING FASTENERS

20. Remove upper fan drive support bracket from the upper section of the radiator.

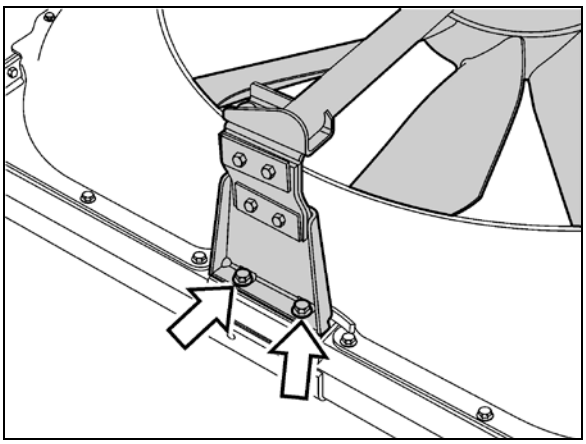

FIGURE 34: REMOVING UPPER FAN DRIVE SUPPORT BRACKET

21. With assistance, remove fan drive and drive frame from radiator.
22. Remove fan shroud from radiator.

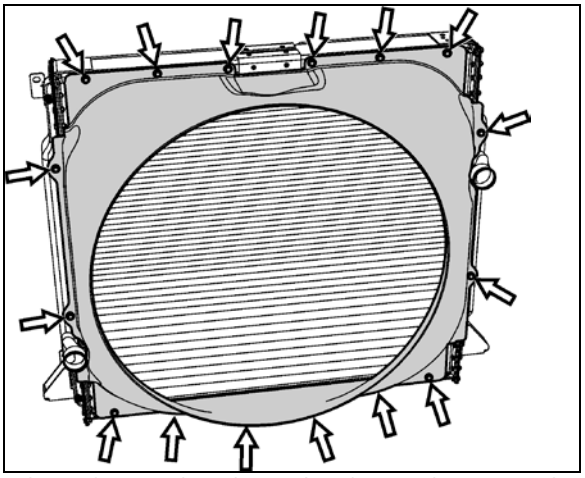

FIGURE 35: REMOVING FAN SHROUD FROM RADIATOR

Reverse removal procedure to reinstall radiator assembly.

12 CHARGE AIR COOLER (CAC) LEAKAGE

Spec for CAC acceptable leakage: The CAC is considered acceptable if it can hold 30 psi (206 kPa) gauge pressure with not more than 5 psi (34 kPa) loss in 15 seconds after turning off the hand valve.

NOTE
This spec does not apply if there is any evidence that the leak was caused by a foreign object impact.

13 COOLING FAN DRIVE MECHANISM

13.1 DRIVE PULLEY AND UNIVERSAL JOINT SHAFT

To disconnect the universal shaft, proceed as follow:

WARNING
Set the ignition to the OFF position and remove the key from the contact switch to prevent accidental starting of the engine.

1. Unwrap the drive belt from around the pulley (see paragraph MOUNTING THE DRIVE BELT).
2. Dismount the fan drive pulley. Gain access to the 6 mounting bolts from behind the pulley, through the opening in the cast aluminum support (Figure 37).
3. Unscrew and remove the universal joint shaft mounting bolts (6) at the fan clutch.
4. Slowly, move the shaft toward the rear of the vehicle.
5. Finally, dismount the universal joint shaft from the fan drive pulley (6 bolts).

Installation of the universal joint shaft is the same as removal, but in reverse order.

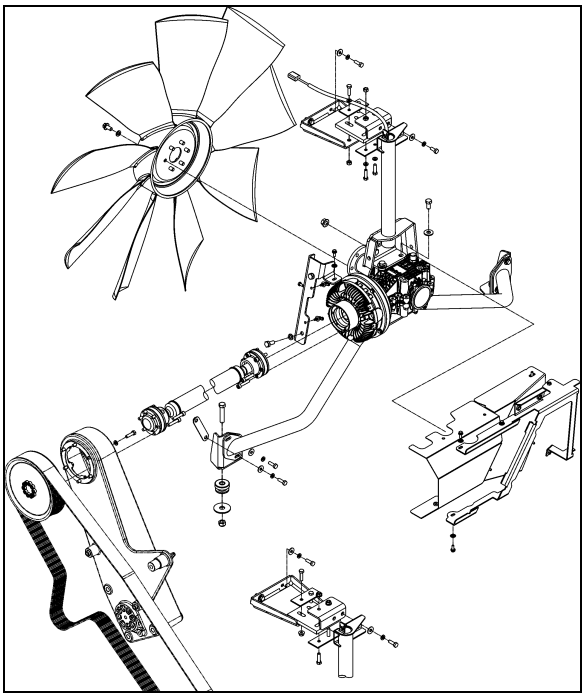

FIGURE 36: COOLING FAN DRIVE MECHANISM 05149

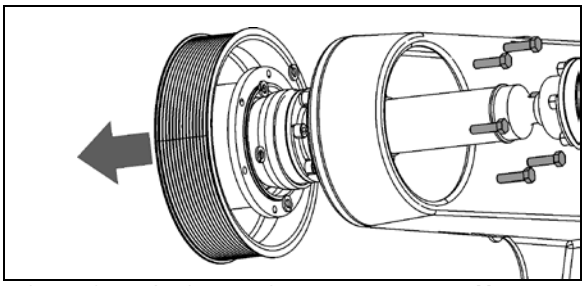

FIGURE 37: DISMOUNTING FAN DRIVE PULLEY 05123C

13.2 IDLER REPLACEMENT

If an idler is defective, replace as follow:

WARNING

Set the ignition to the OFF position and remove the key from the contact switch to prevent accidental starting of the engine.

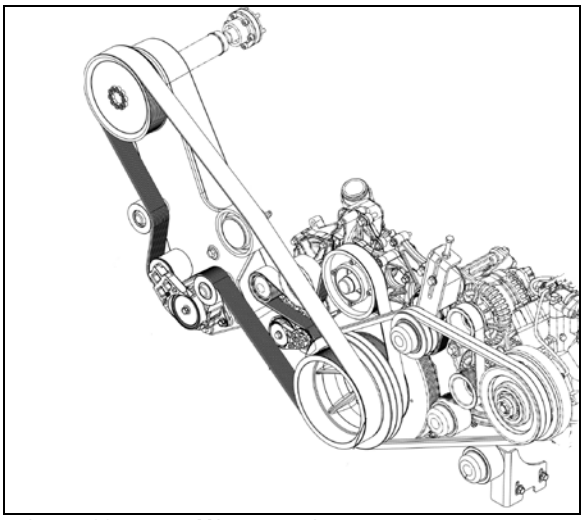

FIGURE 38: PULLEYS ARRANGEMENT 05146

1. Remove the protective cap (replace with a new one).
2. Unscrew the idler mounting bolt.
3. Replace idler with a new one.

CAUTION

When installing the idler, make sure it rests perfectly against the bearing surface on the cast aluminum support. If not, the drive belt may slip out of the idler. See figure below.

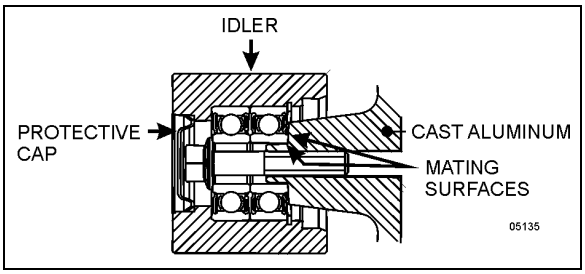

FIGURE 39: IDLER MOUNTED ON THE CAST ALUMINUM SUPPORT

4. Tighten the new idler on the cast aluminum support.

TORQUE: 35 lb-ft (47 Nm)

5. Place a new protective cap.

14 VARIABLE SPEED COOLING FAN

The cooling fan clutch has two thermostatically controlled speeds, plus a neutral (clutch disengaged). The engine control module controls the speed by comparing data from engine coolant temperature, charge air temperature, Allison transmission oil temperature and small A/C high side pressure to a set of calibration data. The fan drive clutch is electromagnetic; the engine control module sends an electric current to regulate speed by activating one magnetic coil for the first speed and two magnetic coils for the second speed.

The settings are:

	Engine coolant temp.	Air intake temp.	Allison trans. oil temp.
temperature rising ⇧	208°F: fan engages in HIGH SPEED	194°F: fan engages in HIGH SPEED	230°F: fan engages in HIGH SPEED
	203°F: fan engages in LOW SPEED	176°F: fan engages in LOW SPEED	216°F: fan engages in LOW SPEED
temperature dropping ⇩	203°F: fan HIGH SPEED disengages	189°F: fan HIGH SPEED disengages	225°F: fan HIGH SPEED disengages
	198°F: fan LOW SPEED disengages	170°F: fan LOW SPEED disengages	210°F: fan LOW SPEED disengages

	Small A/C high side pressure
pressure rising ⇧	170 psi: fan engages in HIGH SPEED
	120 psi: fan engages in LOW SPEED
pressure dropping ⇩	130 psi: fan HIGH SPEED disengages
	90 psi: fan LOW SPEED disengages

WARNING

DO NOT work near the fan with the engine running or the ignition in the ON position. The engine fan can engage at any time without warning. Anyone near the fan when it turns on could be seriously injured.

14.1 LOCKING RADIATOR FAN CLUTCH FOR EMERGENCY OPERATION

14.1.1 Electrical Locking

If the radiator fan clutch does not function due to an electrical control system malfunction and the engine is overheating, you can activate the fan clutch through one of the Driver Information Display menus. For more detail, refer to “Forced Activation of the Radiator Fan Clutch” paragraph in Section 06: ELECTRICAL.

NOTE
If the fan clutch does not engage using this procedure then the clutch is faulty or the wiring between the multiplex module and the clutch is faulty. Mechanically lock the fan as described in section 13.1.2.

14.1.2 Mechanical Locking In Case Of Power Failure

Once mechanically locked, the fan clutch is rigidly connected to the drive mechanism and will rotate continuously, with no considerations for the cooling needs. This is an emergency situation and the vehicle shall not be operated in that situation for an extended period.

In case of a magnetic clutch malfunction:

1. Set the ignition to the OFF position and remove the key from the contact switch to prevent accidental starting of the engine.
2. Disconnect the fan clutch electrical connector.
3. Unscrew and remove the 4 spare M6x12 hex bolts screwed to the angle on the fan gearbox mounting support (FIGURE 40).
4. Screw in 4 hex bolts through the clutch anchor plate into the rotor. Using the automatic belt tensioner, release tension on the drive belt in order to be able to rotate the fan clutch drive mechanism by hand.

TORQUE: 7.5 lb-ft (10 Nm)

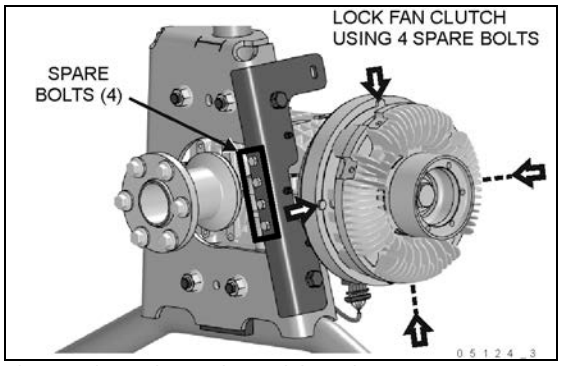

FIGURE 40: MECHANICAL LOCKING

14.2 MAINTENANCE

1. Clean the fan and related parts with clean fuel oil and dry them with compressed air. Do not clean with steam or high-pressure jet.
2. Check the fan blades for cracks or other damage. Replace the fan if the blades are cracked or deformed.
3. Remove any rust or rough spots in the grooves of the fan drive mechanism pulley. If the grooves are damaged or severely worn, replace the pulley.
4. Do not restrict fan rotation during engine operation for any reason.
5. Do not operate fan driving mechanism with a damaged fan assembly. Replace a damaged fan as soon as the fault is noted.
6. Immediately investigate and correct any operator complaint involving driving mechanism or cooling system performance.
7. When questions arise, obtain answers before proceeding. Assistance is available through the Prevost After-Sales Service support serving your area.

14.3 INSPECTION

WARNING
Set the starter selector switch in engine compartment to the "OFF" position to prevent accidental starting of the engine.

- Check security of fasteners securing fan blade assembly to right angle gearbox.
- Visually inspect fan driving mechanism, fan blade assembly, shroud, radiator, and surrounding area for evidence of contact between rotating and non-rotating parts.

- Check drive belt for fraying, cracking, and proper tension.
- Turn fan through at least 360° of rotation. It should turn smoothly with no resistance.

14.4 FAN REMOVAL / INSTALLATION

The fan is bolted to the right angle gearbox shaft flange. To remove the fan:

- Unscrew and remove the mounting bolts and washers.

To reinstall the fan:

- If the fan is still in the radiator fan shroud, place 2 of the mounting bolts on the opposite side of the flange, in reverse direction, in order to use them as guide pins to position the fan.
- Once properly positioned, screw the 4 remaining bolts back in (finger tight).
- Finally, take the 2 bolts that were used as guide pins and screw them back in on the proper side of the fan. Tighten in a star pattern.

TORQUE: 32 lb-ft (43 Nm)

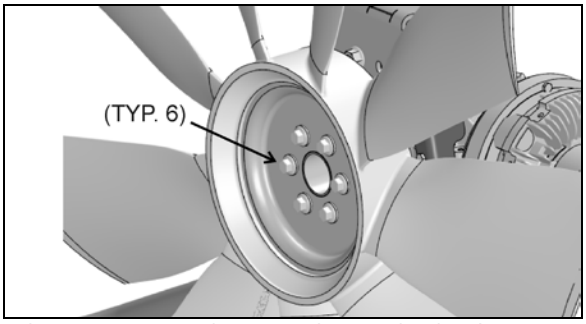

FIGURE 41: RADIATOR FAN MOUNTING BOLTS 05125

15 FAN RIGHT ANGLE GEARBOX

The radiator fan is belt driven from the engine crankshaft pulley through a drive belt, a universal joint shaft, a clutch and right angle gearbox assembly.

15.1 MAINTENANCE

MAINTENANCE

Change the right angle gearbox oil only at operating temperature at the intervals specified by the Lubrication And Servicing Schedule in Section 24: LUBRICATION & SERVICING. Replace sealing rings at every oil change.

15.2 OIL CHANGE

For the list of approved oils for Linnig right angle gearbox, refer to Linnig bulletin **142.377** found on your Technical Publications USB flash drive.

1. Stop engine and make sure that all engine safety precautions have been observed.
2. Set the ignition to the OFF position and remove the key from the contact switch to prevent accidental starting of the engine or set the rear start panel selector switch to the OFF position.
3. Clean gear case carefully.
4. Remove the drain plug located underneath the right angle gearbox case and allow the oil to drain into a suitable container.
5. Replace the seal and screw the drain plug back in.
6. Unscrew and remove the oil level plug and the top filler plug/vent.
7. Add gear lubricant until oil level reaches the bottom of the side oil level check point (approximately 0.85 pint).

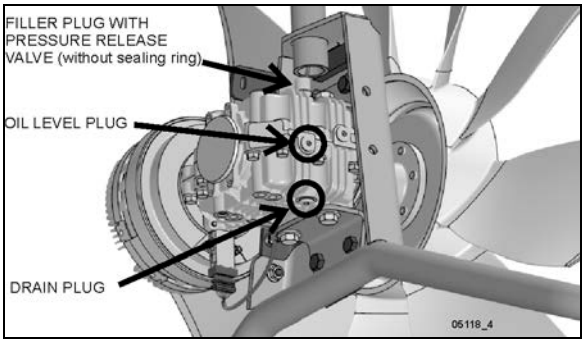

FIGURE 42: RIGHT ANGLE GEARBOX

WARNING

Note that warranty may be voided if oil change interval is not respected or an inappropriate type of oil is used. Refer to refer to Linnig bulletin **142.377** for the list of approved oils.

8. Replace the seals and screw plugs back in. Torque as prescribed.
9. Start the engine and allow running a few minutes. Stop the engine and check for leaks.

15.3 REMOVAL / INSTALLATION

To remove the right angle gearbox, proceed as follows:

1. Set the ignition to the OFF position and remove the key from the contact switch to prevent accidental starting of the engine.
2. Disconnect the fan clutch electrical connector.
3. Dismount the fan and lean it against the radiator (refer to previous paragraph).
4. Disconnect the universal joint shaft.
5. Dismount the angle shown on the image below.

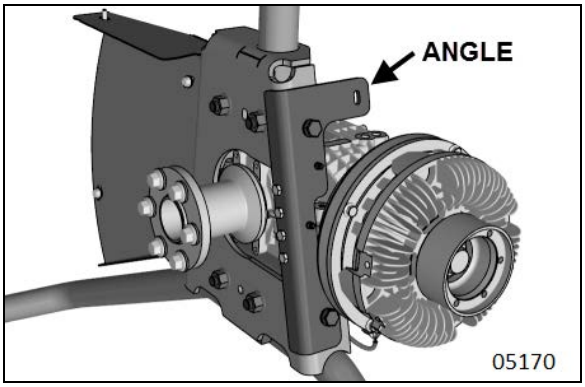

FIGURE 43: DISMOUNT THE ANGLE SHOWN

6. Loosen the gearbox upper support bracket top bolts.
7. Unscrew and remove 4 gearbox mounting bolts.
8. Slide the gearbox out of the support assembly.

Installation procedure is the same as removal but in reverse order. Tighten the 4 mounting bolts as specified.

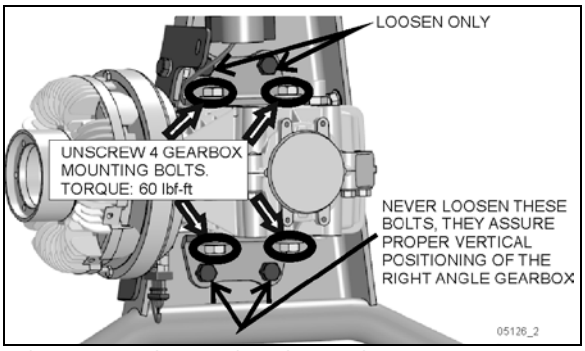

FIGURE 44: RIGHT ANGLE GEARBOX

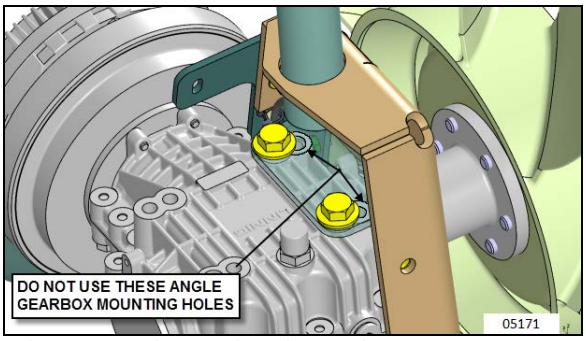

FIGURE 45: RIGHT ANGLE GEARBOX

16 COOLING FAN DRIVE BELT

16.1 MAINTENANCE

MAINTENANCE

Inspect the cooling fan drive belt for cracks or frayed material at the intervals specified by the Lubrication And Servicing Schedule in Section 24: LUBRICATION & SERVICING.

16.2 MOUNTING THE DRIVE BELT

To install the cooling fan drive belt, proceed as follow:

WARNING

Set the ignition to the OFF position and remove the key from the contact switch to prevent accidental starting of the engine.

WARNING

Potential Accident Risk. Always use extreme caution when working in the vicinity of hot, rotating or moving parts.

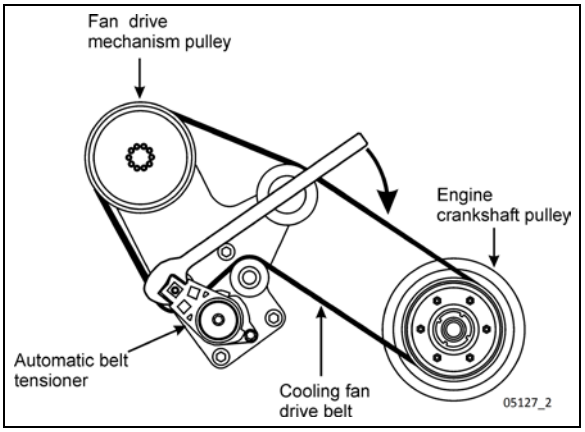

FIGURE 46: DRIVE BELT ROUTING (VOLVO D13 ENGINE)

1. Wrap the new drive belt around the fan drive mechanism pulley, the idlers and the automatic tensioner idler as shown on Figure 46.
2. Using the special tool included with your vehicle (see inside the Warning Reflectors box located in the first curb-side baggage bay), rotate the automatic tensioner in clockwise direction to relieve tension on the belt and hold the tensioner in that position (Figure 46).
3. Finally, place the drive belt around the engine crankshaft pulley.
4. Release the tensioner slowly and let it return to its natural position.

17 SPECIFICATIONS

Cooling System Capacity (Approximation)

Includes heating system ..... 27 US gal (102 liters)

Thermostat - Volvo D13 Engine

Number used 1
Start to close ..... 203°F (95°C)
Fully closed ..... 185°F (85°C)

Cooling Fan Drive Belt – Volvo D13 Engine

Type ..... Poly-Rib 14PK2213
Qty 1
Prevost number 5060096

Coolant (ELC) - Volvo D13 Engine

Volvo Number 20358716
Texaco CPS 227998
Chevron CPS 227811

Coolant Filter Cartridge – Volvo D13 Engine

Number used 1
Type ..... Spin-on
Prevost number 20458771

CONTENTS

1. TORQUE TABLES 2

1.1 HOSE CLAMPS 2
1.2 PULLEYS, IDLERS & TENSIONNERS 3
1.3 COOLING ASSEMBLY 4
1.4 MISCELLANEOUS 5

2. DESCRIPTION 6

3. MAINTENANCE 8

3.1 GENERAL RECOMMENDATIONS 8

4. HOSES 8

4.1 HOSE CLAMPS ON COOLANT LINES 8
4.2 CONSTANT-TORQUE HOSE CLAMPS ON CHARGE AIR COOLER (CAC) 9
4.2.1 Maintenance 9

5. THERMOSTAT OPERATION 9

5.1 THERMOSTAT REPLACEMENT 9
5.2 CHECKING THERMOSTAT 10

6. COOLANT 10

6.1 COOLANT LEVEL VERIFICATION 10
6.2 COOLANT LEVEL SENSOR 10
6.3 THAWING COOLING SYSTEM 10
6.4 COOLANT RECOMMENDATIONS FOR VOLVO D13 ENGINE 11
6.5 COOLANT SAMPLING 13

7. DRAINING COOLING SYSTEM 13

8. FILLING COOLING SYSTEM 15

9. FLUSHING 15

9.1 COOLING SYSTEM DESCALERS 15
9.2 REVERSE FLUSHING 16

10. SPIN-ON COOLANT FILTER 16

11. COOLING ASSEMBLY 17

11.1 MAINTENANCE 18
11.2 COOLING FAN REPLACEMENT 19
11.3 COOLING FAN SHROUD REMOVAL & INSTALLATION 20
11.4 COOLING PACK (RADIATOR & CAC) REMOVAL & INSTALLATION 21
11.5 CHARGE AIR COOLER (CAC) IN VEHICLE REMOVAL 27

12. SPECIFICATIONS 31

1. TORQUE TABLES

1.1 HOSE CLAMPS

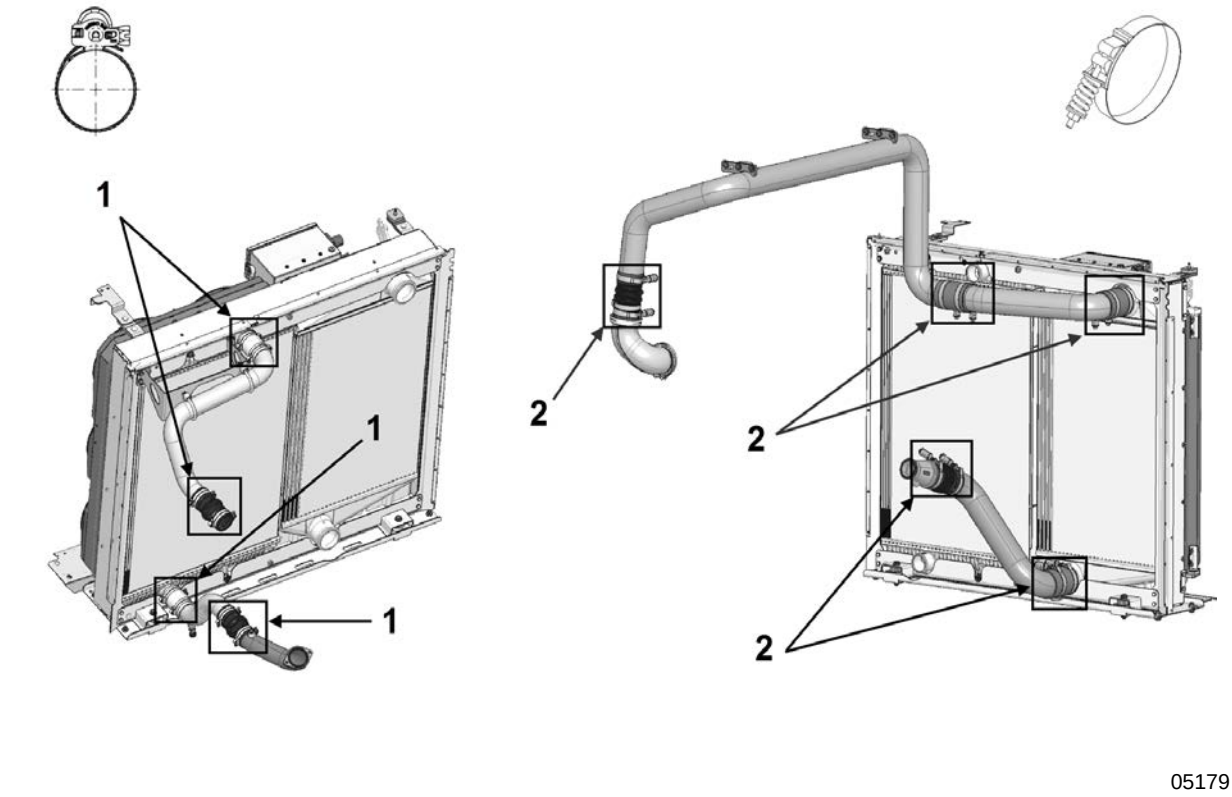

HOSE CLAMPS		
No	DESCRIPTION	TORQUE
1	Hose clamps - coolant lines (2.5in O.D)	30 lb-in (3.39 Nm)
2	Constant-torque hose clamps - charge air cooler (CAC)	4.5-5.5 lb-ft (6.1-7.46 Nm)

1.2 PULLEYS, IDLERS & TENSIONNERS

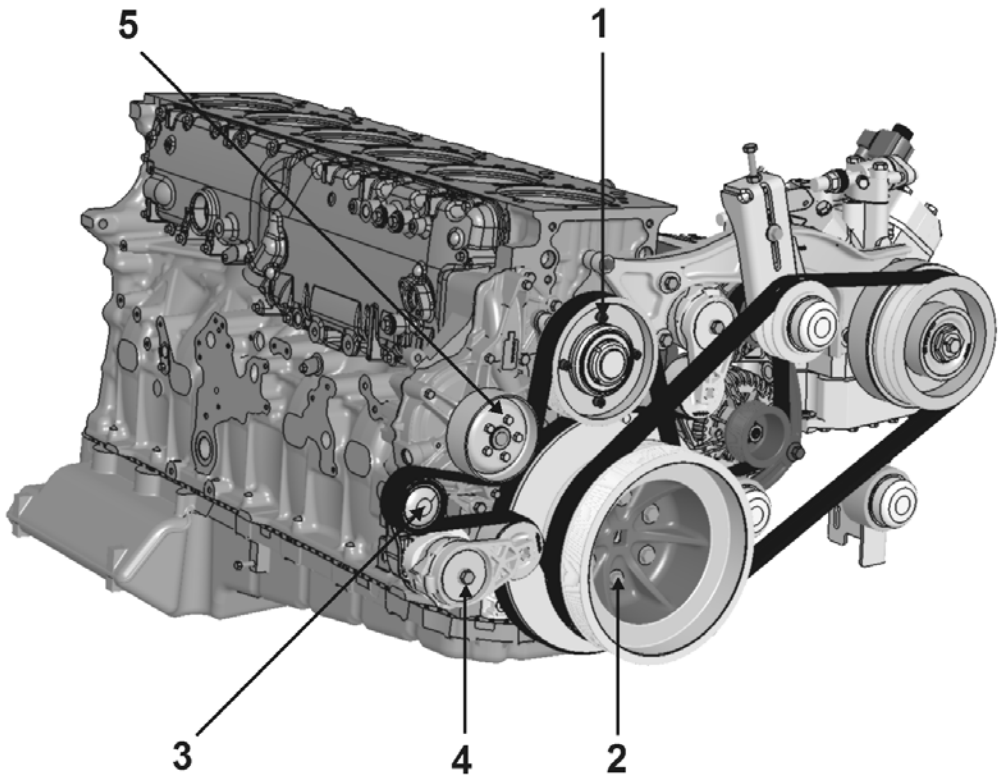

01225_3

PULLEYS, IDLERS & TENTIONERS		
No	DESCRIPTION	TORQUE
1	Water pump idler pulley bolts	16 lb-ft (22 Nm)
2	Crank pulley bolts	22 lb-ft (30 Nm)
3	Idler bolt – water pump	43 lb-ft (58 Nm)
4	Automatic belt tensioner bolt – water pump	48 lb-ft (65 Nm)
5	Water pump pulley	18 lb-ft (24 Nm)

1.3 COOLING ASSEMBLY

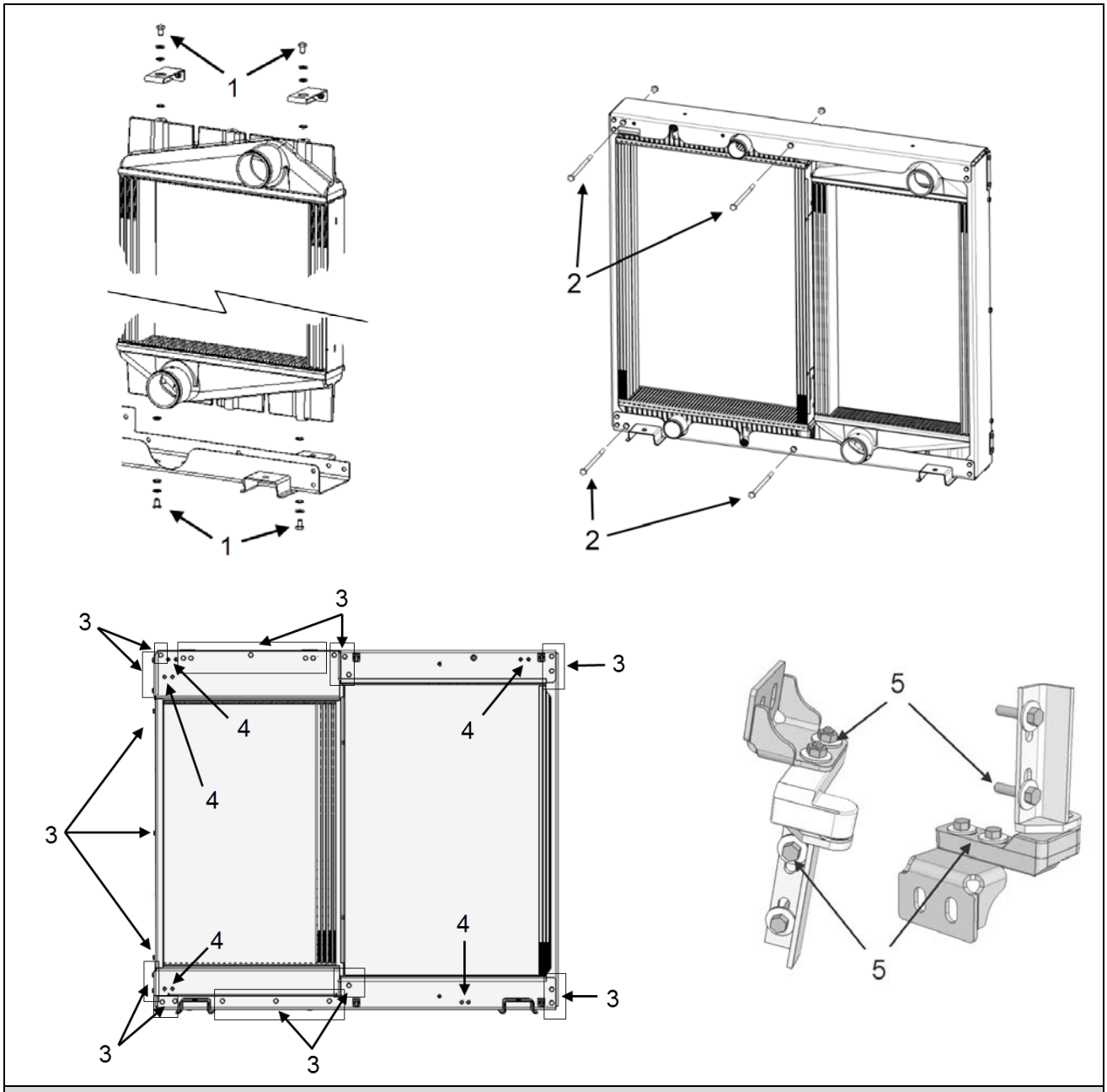

COOLING ASSEMBLY		
No	DESCRIPTION	TORQUE
1	CAC upper & lower mounting bolts (with plastic bushings)	9 lb-ft (12 Nm)
2	Radiator to cooling pack frame mounting bolts (pass through)	9 lb-ft (12 Nm)
3	Cooling pack frame bolts (all 8mm bolts – both sides)	9 lb-ft (12 Nm)
4	Brackets, fan shroud hinge, shroud support & upper support	9 lb-ft (12 Nm)
5	Fan shroud hinge bolts (upper & lower)	68 lb-in (8 Nm)

1.4 MISCELLANEOUS

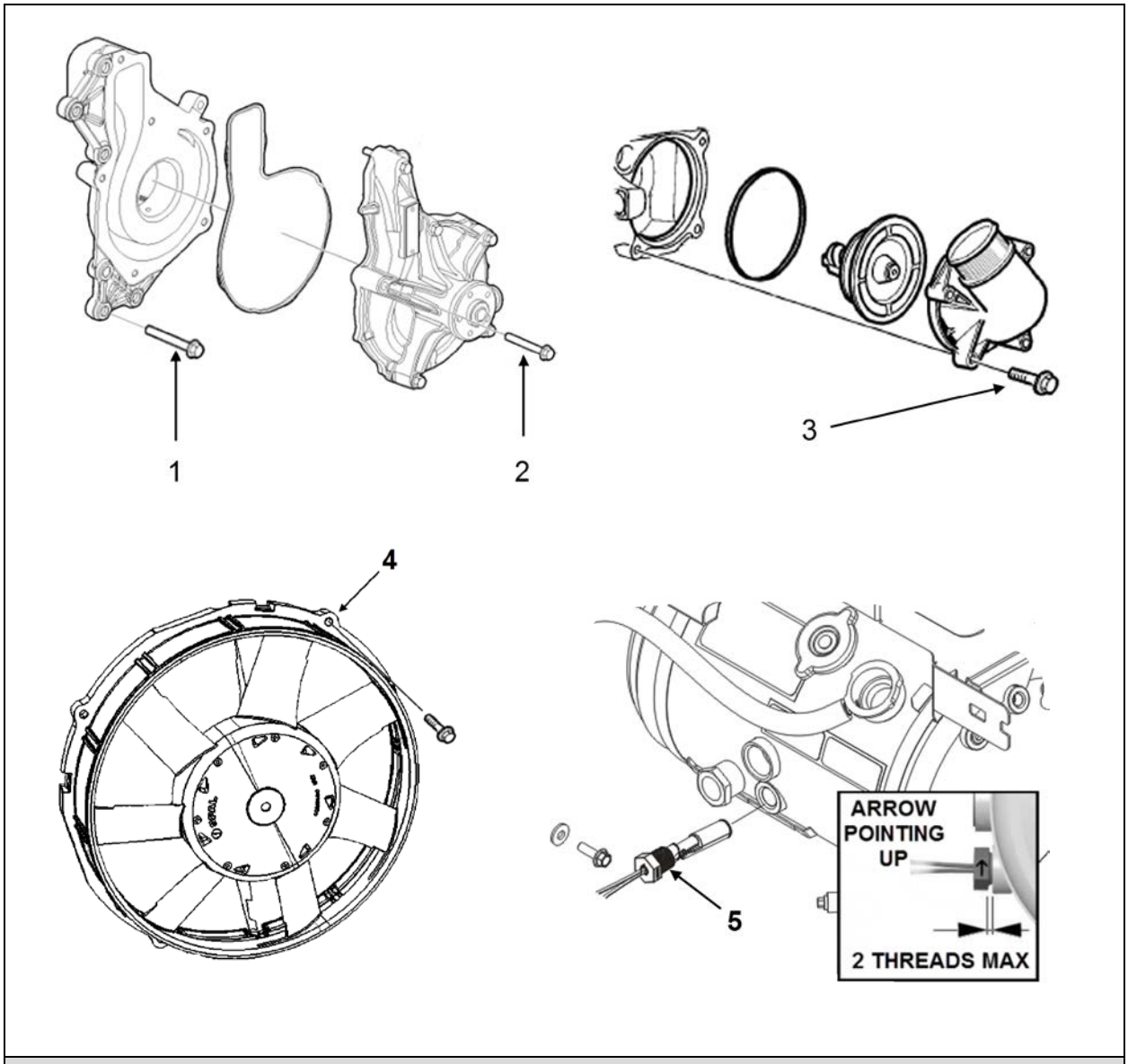

MISCELLANEOUS		
No	DESCRIPTION	TORQUE
1	Water pump - Back cover to engine	29-41 lb-ft (39-56 Nm)
2	Water pump - body to back cover	15-21 lb-ft (20-28 Nm)
3	Thermostat housing bolts	15-21 lb-ft (20-28 Nm)
4	Electric cooling fan mounting bolts	30 lb-in (3 Nm)
5	Coolant level sensor (arrow on side must point up)	2 Threads out MAX*

* Add Teflon – PTFE sealant to threads

2. DESCRIPTION

A radiator and variable speed electric cooling fans are used to effectively dissipate the heat generated by the engine. A charge air cooler (CAC) mounted next to the radiator is also used to cool the compressed air flow coming from the turbocharger before it reaches the engine intake. All components, along with the fans circuit breaker box, are grouped together and mounted on the L.H. side of the engine compartment to form an easy to access and service “cooling assembly”.

WARNING

WHEN THE ENGINE IS RUNNING

Cooling fans may activate at any moment.

Keep hands away from cooling fans or keep the radiator door closed.

WARNING

Cooling fans may be running when the engine is shut down in the following conditions:

- If a High Exhaust Temperature condition exists (e.g. following regeneration).
- During "Motor Test" sequence.

An engine mounted centrifugal water pump is used to circulate the engine coolant in the cooling circuit. The pump works in conjunction with a full blocking-type thermostat positioned in the water outlet passage, controlling the coolant flow and providing fast engine warm-up and regulated coolant temperature.

The engine coolant is drawn from the lower portion of the radiator by the water pump and is forced through the transmission cooler before going through the oil cooler and into the cylinder block.

From the cylinder block, the coolant passes up through the cylinder head and, when the engine is at normal operating temperature, it goes through the thermostat housing and into the upper portion of the radiator. The coolant then passes through a series of tubes where its heat is dissipated by air streams created by the revolving fans and the motion of the vehicle.

Upon starting a cold engine or when the coolant is below normal operating temperature, the closed thermostat directs coolant flow from the thermostat housing through the by-pass tube to the water pump. Coolant is recirculated through the engine to aid engine warm up.

When the thermostat opening temperature is reached, coolant flow is divided between the radiator inlet and the by-pass tube. When the thermostat is completely open, all of the coolant flow is to the radiator inlet.

The cooling system is filled with a funnel through a pressure & filler cap on the surge tank (Figure 2), the cap is also used to maintain pressure within the system. When system exceeds normal pressure rating (14 psi - 96.53 kPa), the cap releases air and if necessary, coolant through the overflow tube (Figure 2). The thermostat is located in the housing bolted to the engine on the L.H. side.

The engine cooling system also provides hot coolant for the vehicle heating system. Refer to section 22, *""HEATING AND AIR CONDITIONING"* in this manual for information relating to heating system water circulation.

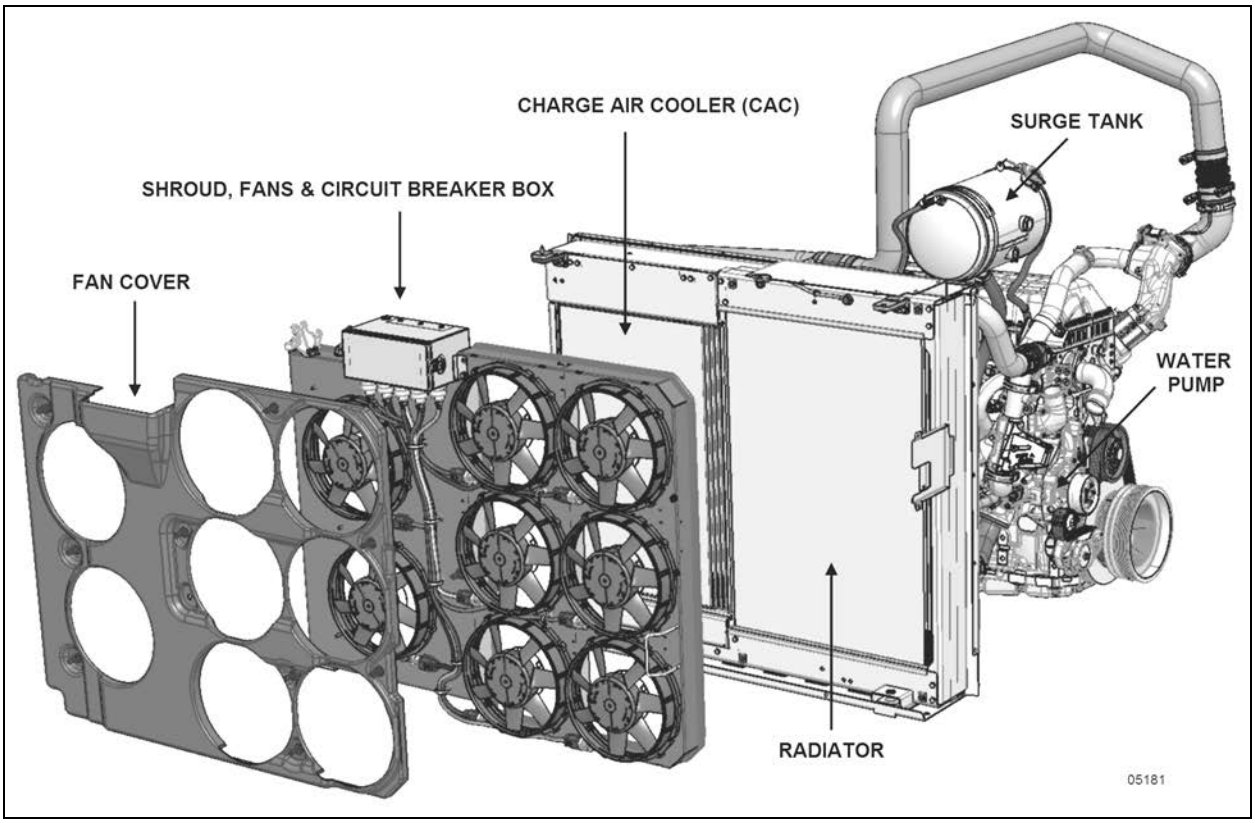

FIGURE 1: COOLING ASSEMBLY & RELATED COMPONENTS

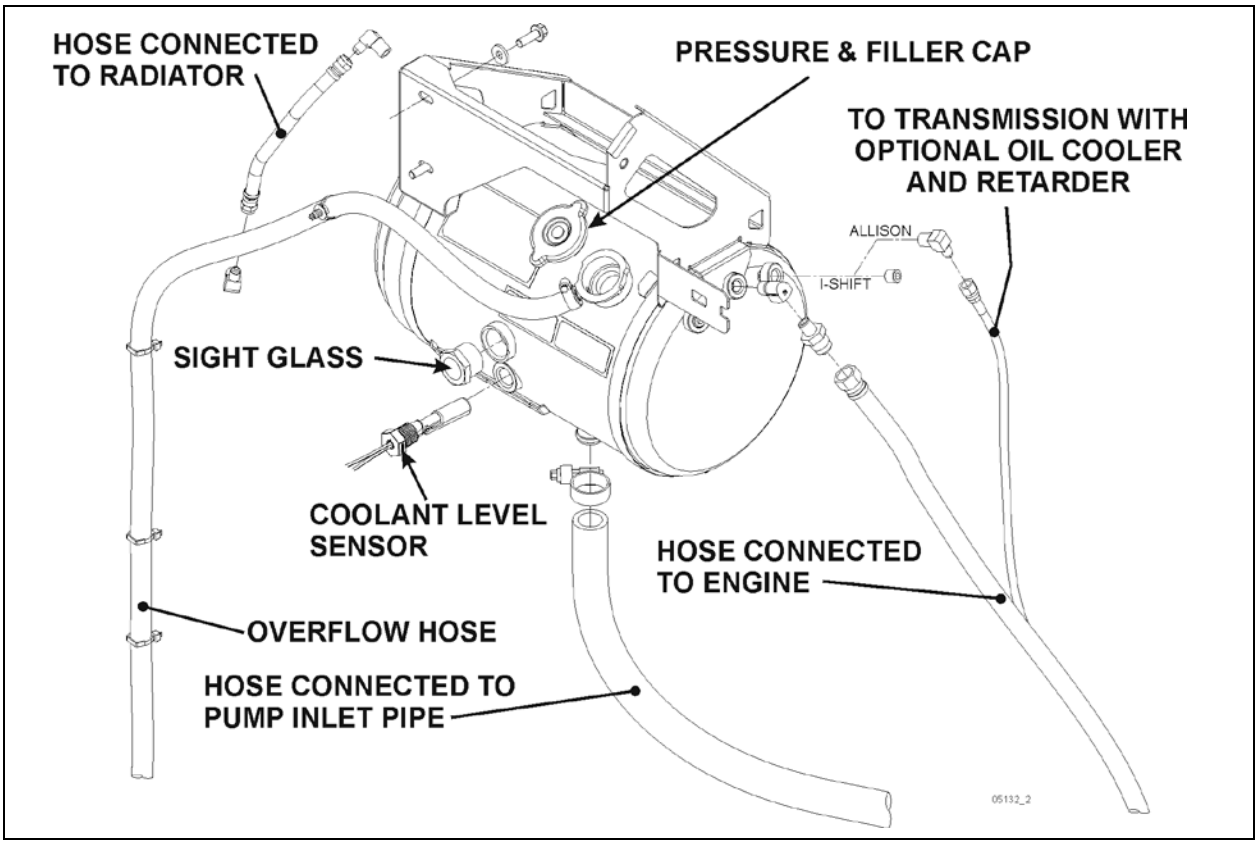

FIGURE 2: COOLANT SURGE TANK

3. MAINTENANCE

3.1 GENERAL RECOMMENDATIONS

A systematic routine inspection of cooling system components is essential to ensure maximum engine and heating system efficiency.

- Check coolant level in the surge tank daily, and correct if required. Test antifreeze strength.
- Check water pump belt and replace if frayed or badly worn.
- Check radiator cores for leaks and make sure the cores are not clogged with dirt or insects. To avoid damaging the fins, clean cores with a low-pressure air hose. Steam clean if required.
- Inspect the water pump operation. A leaky pump sucks in air, increasing corrosion.
- Repair all leaks promptly. Unrepaired leaks can lead to trouble. Inspect and tighten radiator mounts periodically. Test and replace thermostat regularly.

NOTE

In order to ensure the integrity of the system, it is recommended that a periodic cooling system pressure check be made. Pressurize the cooling system to 103-138 kPa (15-20 psi) using Radiator and Cooling System Tester, J24460-1. Do not exceed 138 kPa (20 psi).

Any measurable drop in pressure may indicate a leak. Whenever the oil pan is removed, the cooling system should be pressure checked as a means of identifying any incipient coolant leaks. Make sure the cause of the internal leak has been corrected before flushing the contaminated system.

CAUTION

Hoses and hose connections should be clean and free of oil and grease before hose clamp installation. **Do not use** soap, lubricant or sealing compound on hose connections.

NOTE

For additional information concerning Volvo D13 engine components or engine-related components, consult Volvo Trucks Canada or Volvo Trucks North America Web Site under: Parts & Service. On Volvo web site, you will find detailed service procedures for parts replacement, repair and maintenance.

4. HOSES

Rotten, swollen, and worn out hoses or loose connections are frequent causes of cooling system problems.

Serious overheating is often caused by an old hose collapsing or from rotten rubber shedding from hoses and clogging the coolant passages.

Connections should be inspected periodically and hose clamps tightened. Replace any hose found to be cracked or swollen.

4.1 HOSE CLAMPS ON COOLANT LINES

All hose clamps used for the heating and cooling systems have a spring function (spring in the housing) to compensate for the normal expansion/contraction of hose and metal connection that occurs during vehicle operation and shutdown. These clamps are worm-driven and made of stainless steel.

All connections equal or greater than 2 inches OD have doubled clamps (two clamps, side by side) with screw housing separated from at least 90°. A torque wrench should be used for proper installation.

TORQUE: 30 lb-in (3.39 Nm)

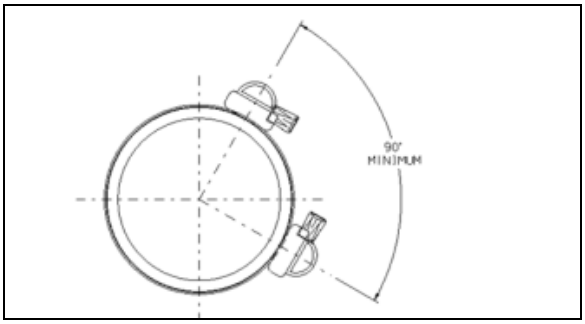

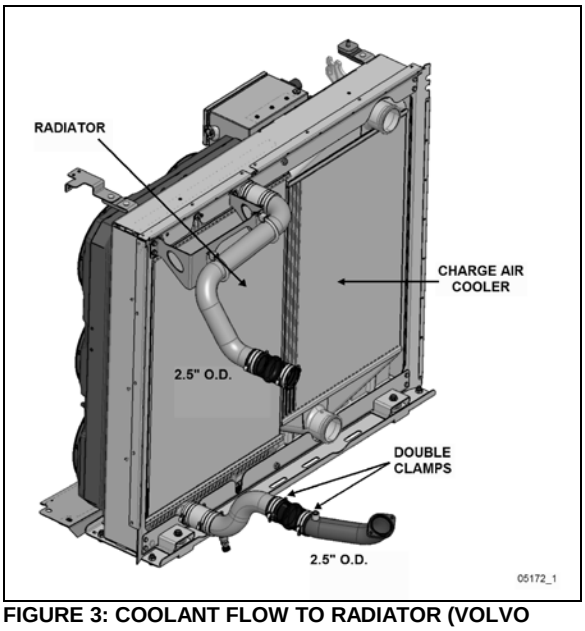

FIGURE 3: COOLANT FLOW TO RADIATOR (VOLVO D13)

CAUTION

The hose clamps will break if over-torqued. Do not over-tighten, especially during cold weather when hose has contracted.

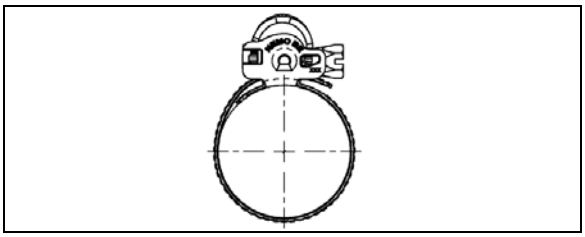

FIGURE 4: CLAMP TYPE USED ON HEATING & COOLING SYSTEMS

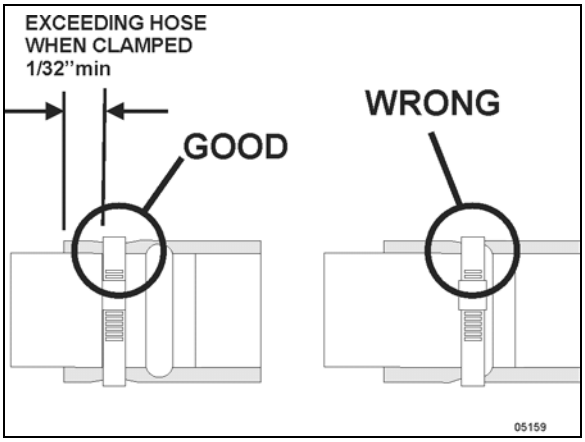

FIGURE 5: PROPER HOSE CLAMP INSTALLATION

4.2 CONSTANT-TORQUE HOSE CLAMPS ON CHARGE AIR COOLER (CAC)

If for any reason hose clamps need to be replaced; install and tighten hose clamps to specified torque (dry) (Figure 6).

TORQUE: 4.5-5.5 lb-ft (6.1-7.46 Nm)

CAUTION

The hose clamps will break if over-tighten. Do not over-tighten, especially during cold weather when hose has contracted.

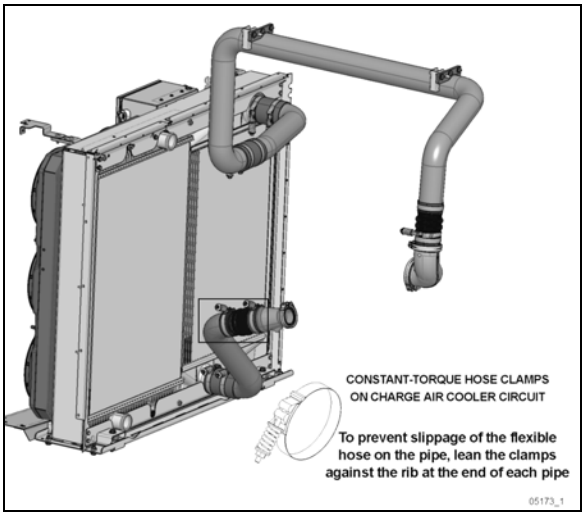

FIGURE 6: CHARGE AIR COOLER HOSE CLAMPS

4.2.1 Maintenance

Since the constant-torque clamp automatically adjusts to keep a consistent sealing pressure, there is no need to torque hose clamps on a regular basis. During vehicle operation and shutdown, the screw tip will adjust according to the temperature and pressure changes.

Checking for proper torque should be done at room temperature.

5. THERMOSTAT OPERATION

5.1 THERMOSTAT REPLACEMENT

1. Drain the cooling system.
2. Remove the bolts, the thermostat housing and the thermostat. Carefully clean the thermostat seat and all cylinder head-to-thermostat housing mating surfaces.

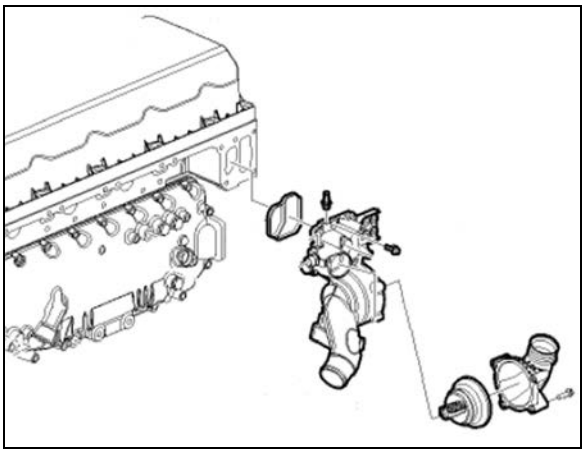

FIGURE 7: VOLVO D13 THERMOSTAT HOUSING

3. Install the new thermostat. Make sure that the rubber seal remains properly seated.
4. Position the thermostat housing to the cylinder head, install the bolts and tighten.

TORQUE: 15-21 lb-ft (20-28 Nm)

5. Install the rubber radiator hose to the thermostat housing. Position the clamp and tighten to secure.
6. Fill the system with the recommended coolant.
7. Start the engine, check for leaks and proper operation. After shutdown, replenish fluids as necessary.

5.2 CHECKING THERMOSTAT

A function check must be carried out before installing a new thermostat.

NOTE
Check to be sure that the thermostat closes fully. This can be done by holding it up to the light to check that there is no visible gap at the opening point. If the thermostat does not close properly, replace it.

1. Warm up water in a receptacle to 75°C (167°F) and immerse the thermostat in the water. Use a piece of wire attached to the thermostat.

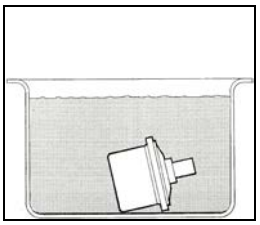

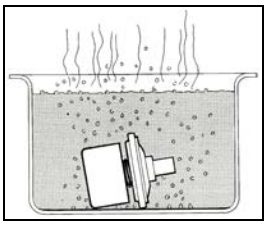

2. After at least 30 seconds, check that the thermostat is still closed.
3. Now warm the water to 100°C (212°F). After at least 30 seconds at the boiling point, check that the thermostat has opened at least 7mm (9/32in). If the thermostat has not opened, it must be replaced. A good thermostat starts to close at 95°C (203°F) and is fully closed at approximately 85°C (185°F).

6. COOLANT

6.1 COOLANT LEVEL VERIFICATION

Coolant level is correct when coolant is visible halfway up through the surge tank sight glass with a cold engine (Figure 2). If coolant level is low, fill cooling system.

6.2 COOLANT LEVEL SENSOR

This warning device consists of a fluid level probe mounted on the surge tank. The probe sends a signal to the engine control module to indicate coolant level. If the coolant level drops below the probe, the *"Check Engine"* light flashes and a diagnostic code is registered (see section 01*" ENGINE"*).

⚠ **CAUTION**
Do not run engine with the “Check Engine” light flashing.

The level probe is mounted on the front of the surge tank.

6.3 THAWING COOLING SYSTEM

If the cooling system becomes frozen solid, place the coach in a warm area until the ice is completely thawed.

⚠ **CAUTION**
Under no circumstances should the engine be operated when the cooling system is frozen, as it will result in engine overheating due to insufficient coolant.

Once thawed, check engine, radiator and related components for damage caused by expansion of frozen coolant fluid.

6.4 COOLANT RECOMMENDATIONS FOR VOLVO D13 ENGINE

The coolant provides a medium for heat transfer and controls the internal temperature of the engine during operation. In an engine having proper coolant flow, some of the combustion heat is conveyed through the cylinder walls and the cylinder head into the coolant. Without adequate coolant, normal heat transfer cannot take place within the engine, and engine temperature rapidly rises.

To function properly, the cooling system must be pressurized to prevent localized boiling of coolant. The system must be kept clean and leak-free. The filler and pressure caps must be checked periodically for proper operation.

Always maintain cooling system at the proper coolant level. Check daily, use recommended *extended life coolant* (ELC) with *50/50 antifreeze and deionized water mixture ratio.* This ratio should be used year-round to provide freeze and boil-over protection as well as providing a stable environment for seals and hoses.

When topping up coolant, use the same coolant mixture type as the mixture already in the cooling system. Do not mix two different types of coolant.

Do not use antifreeze formulated for automobile gasoline engines, these have a very high silicate content that will clog the radiator and leave unwanted deposits in the engine.

A decal located on the surge tank provides information on recommended coolants.

CAUTION

On Volvo D13 engine, use **only** *Extended Life Coolant* (ELC). **Do not** add supplemental coolant additives (SCA) to extended life coolant. **Do not** use a coolant filter containing Supplemental Coolant Additives (SCA).

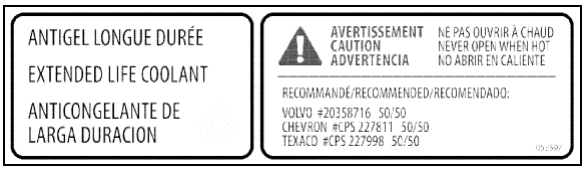

Recommended coolants for Volvo D13 engine:

- Texaco CPS#227998 (pre-diluted 50/50 mixture);
- Chevron CPS#227811 (pre-diluted 50/50 mixture);
- Volvo 20358716 (pre-diluted 50/50 mixture);

The ELC coolant slow depleting additive chemistry does not require regular testing, but the coolant can be tested with a *FleetFix® Maintenance Test Strip* (to measure nitrite and carboxylate levels*) and the FleetFix® Dilution Test Kit* (to determine contamination and protection levels of the ELC coolant).
The freeze protection level should be checked at least twice a year using a coolant refractometer.

CAUTION

Extended Life Coolant (ELC) will test as out of additives (SCA), but SCA should not be added. Shortened engine life may be the result of adding SCA.

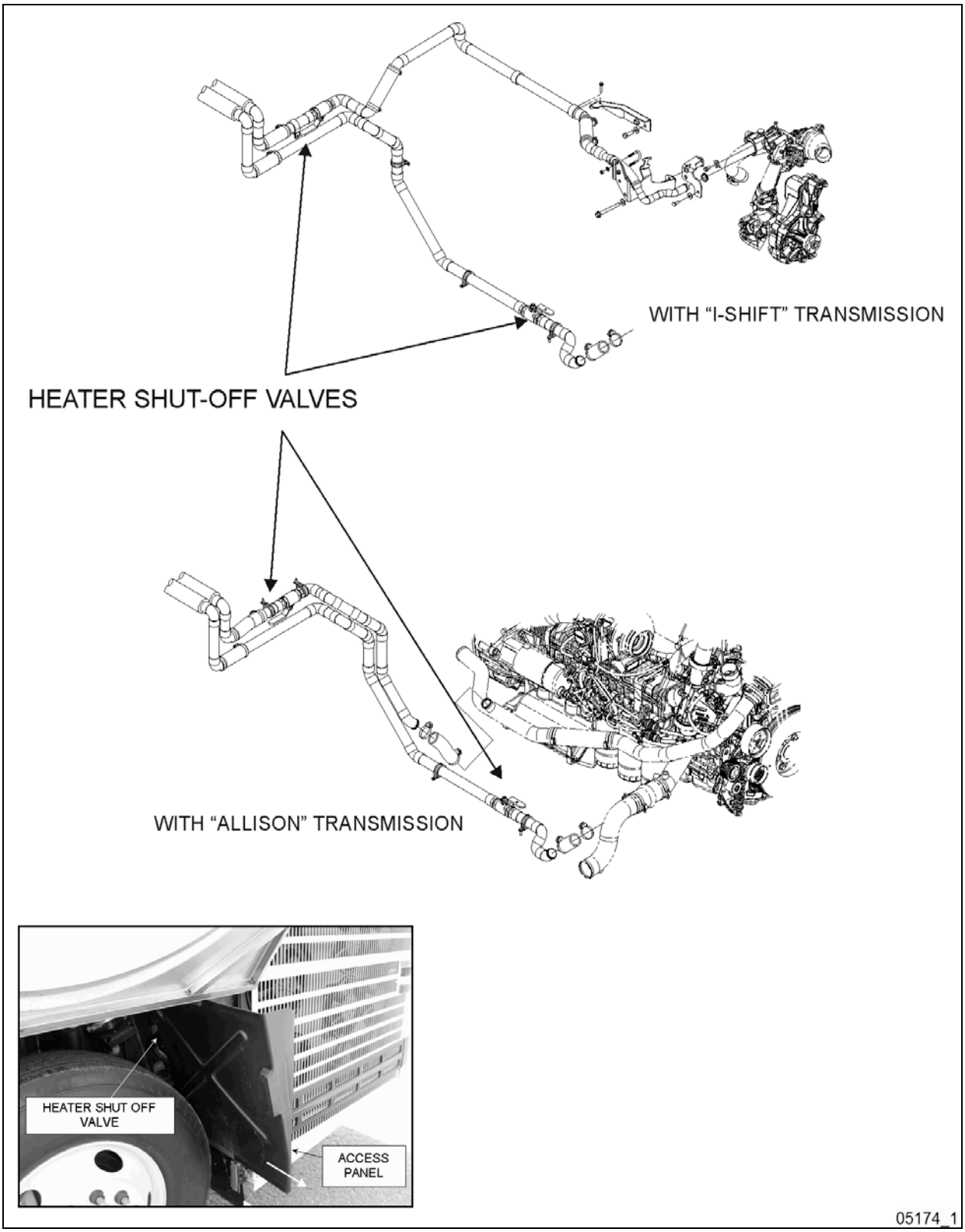

FIGURE 8: LOCATION OF HEATER LINE SHUT-OFF VALVES IN ENGINE COMPARTMENT

6.5 COOLANT SAMPLING

Providing a sample of coolant for lab analysis may be required at some point in the life of the vehicle.

NOTE
The following procedure is provided for reference only. *Instructions coming with the laboratory test kit take precedence over this procedure.*

WARNING

Before proceeding with the following steps, make sure the coolant has cooled down. The sudden release of pressure from a heated cooling system can result in loss of coolant and possible personal injury (scalding) from the hot liquid.

Sampling should be performed on a *cold engine*.

Typical material required:

- Hand Vacuum Pump w/ bottle provision

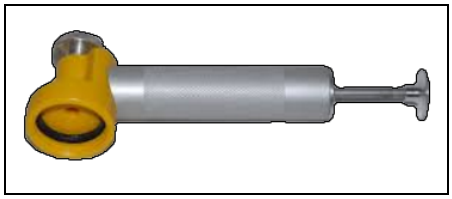

- Sample bottle
- Plastic tube (1/4 “refrigerator” tube)
- Nitrile gloves
- Safety glasses
- Shop Towels

NOTE
Watch out for accidental contamination! *Hand vacuum pump should be used for* coolant sampling only *to prevent cross-contamination.* *Also, ensure cleanliness throughout this procedure to make sure the coolant sample is not contaminated accidentally.*

Sampling should be performed on the surge tank, on a cold engine.

If the vehicle has been standing still for a significant period, drive it around 30 min up to normal operating temperature. Then let it cool down.

1. Pull the pressure cap off the surge tank. Refer to Figure 2 for location of cap.
2. Thread the sample bottle to the pump. Hand tighten.
3. Slide the plastic tubing in the fitting on the pump until it exceeds about 1/2 inch into pump cavity.
4. Insert tube in the surge tank about half way to the bottom. (Do not draw sample in the bottom of the surge tank.)
5. Pump until sample bottle is about 2/3 full. Do not overfill.
6. Loosen pump fitting to remove tube from pump. Allow any coolant in the tube to flow in the bottle.
7. Remove sample bottle and install cap.
8. Throw plastic tube away. (Not to be re-used)
9. Complete any forms required by the laboratory.

7. DRAINING COOLING SYSTEM

Use the following procedures to drain the cooling system partially or completely.

To drain engine and related components:

1. Stop engine and allow engine to cool. Close both heater line shutoff valves.

On X3- 45 coaches & VIP, the valves are located in the engine compartment. One is located under the turbocharger inlet pipe in the lower L.H side of the engine compartment; another valve is located behind the L.H. tag axle wheel and is accessible by lifting the hinged rear wheel fender and removing the access panel behind it (Figure 8).

NOTE

Refer to section 22 under "Preheating System" for information about preheater access and heater line shutoff valve.

MAINTENANCE

Cooling system

Drain, flush, thoroughly clean and refill the system at the intervals specified by the Lubrication And Servicing Schedule in Section 24: LUBRICATION & SERVICING.

When using ELC, **do not** use a filter that contains Supplemental Coolant Additives (SCA).

WARNING

Before proceeding with the following steps, make sure the coolant has cooled down. The sudden release of pressure from a heated cooling system can result in loss of coolant and possible personal injury (scalding) from the hot liquid.

2. Close the shut-off valve on the coolant filter mounting head and remove filter (perform only if filter as to be replaced).
3. Open the shut-off valve on the coolant filter mounting head and drain the coolant into a suitable container. Close the shut-off valve.
4. Unscrew the surge tank pressure cap counterclockwise, ¼ turn to let air enter the system and permit the coolant to drain completely from system.
5. Connect coolant extractor (Figure 9). Use coolant extractor to drain the coolant from the engine. An alternate method is to drain the coolant into a suitable container using the drain hose.

DANGER

Coolant is toxic; risk of poisoning. Do not drink coolant. Use proper hand protection when handling. Keep coolant out of reach of children and animals. Failure to follow these precautions can cause serious illness or death.

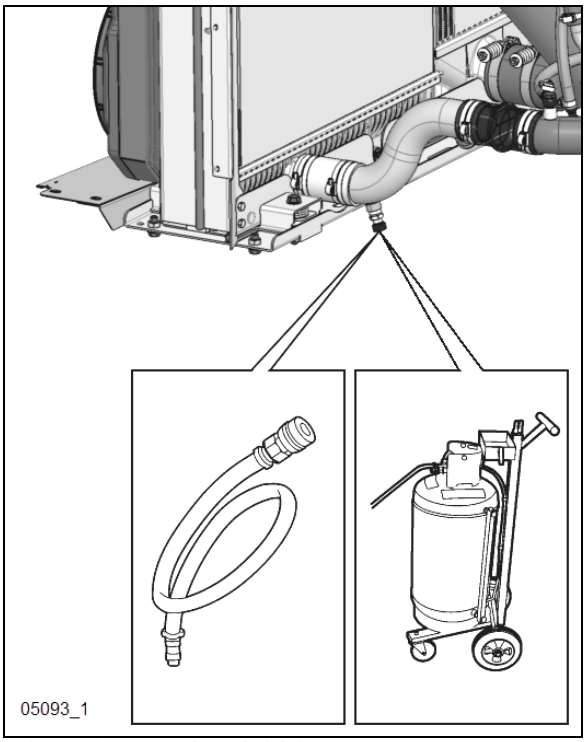

FIGURE 9: EXTRACTING COOLANT

6. Open the radiator drain cock.
7. Remove the transmission oil cooler. Drain, flush and inspect. Refer to Section 7, “TRANSMISSION” for oil cooler maintenance or preventive replacement.

CAUTION

If freezing weather is anticipated and the engine is not protected with antifreeze, drain the cooling system completely when vehicle is not in use. Trapped water in the cylinder block, radiator or other components may freeze and expand resulting in damages. Leave the drain plugs open until the cooling system can be filled with coolant fluid. Do not run engine with cooling system empty.

To drain the entire system, do the previous steps while maintaining the shutoff valves in the open position; follow procedure under *“Draining Heating System”* in Section 22.

8. FILLING COOLING SYSTEM

If only the engine and related components were drained, maintain the two heater line shutoff valves in their closed position, then proceed as follows:

1. Close radiator drain cock.
2. Open the shut-off valve on the coolant filter mounting head.
3. Refill cooling system from the surge tank filler cap inlet with the recommended ethylene glycol-based antifreeze and water solution of the required concentration using the coolant extractor.

> *NOTE*
>
> *Make sure the purge lines are properly connected and not obstructed. The purge lines (thermostat housing dome, radiator top tank, transmission oil cooler or delivery line) are required to ensure complete engine fill and proper purging of air in the system.*

> *NOTE*
>
> *The coolant level should remain within two inches of the surge tank filler neck.*

4. Install the filler and pressure cap, then start the engine and run it at fast idle until reaching normal operating temperature. Check for leaks.

> *NOTE*
>
> *If for any reason, the coolant level drops below the surge tank level probe, the Check Engine warning light will illuminate.*

5. Stop engine and allow cooling.
6. Open the two heater line shutoff valves, check the coolant level in the surge tank, and then add as required.

> **CAUTION**
>
> Never pour cold coolant into a hot engine. The sudden change in temperature may crack the cylinder head or block.

If the entire system has been drained, redo the previous steps while maintaining the two heater line shutoff valves in the "Open" position. With engine running, activate the driver's and central heating systems to permit coolant circulation. Complete the procedure by bleeding the heater cores as explained in Section 22, under *"Bleeding Heating System".*

9. FLUSHING

If the cooling system is contaminated, flush the cooling system as follows:

1. Drain the coolant from the engine.
2. Refill with clean water.

> **CAUTION**
>
> If the engine is hot, fill slowly to prevent rapid cooling and distortion of the engine castings.

3. To thoroughly circulate the water, start and run the engine for 15 minutes after the thermostats have opened.
4. Fully drain system.
5. Refill with clean water and operate for 15 minutes after the thermostats have opened.
6. Stop engine and allow cooling.
7. Fully drain system.

Vehicles without coolant filters:

Fill with a 50/50-antifreeze/water solution and add required inhibitors.

Vehicles with coolant filters:

Fill with a 50/50-antifreeze/water solution. Replace coolant filter as per the Lubrication and Servicing Schedule in section 24 if required.

Dispose of spent fluids in an environmentally responsible manner according to regulations in effect in your area.

COOLING SYSTEM CAPACITY (approximation)
Includes heating system: 26 US gal (99 liters)

9.1 COOLING SYSTEM DESCALERS

If the engine overheats and the water pump, coolant level and thermostat operation have been found to be satisfactory, it may be necessary to flush and de-scale the cooling system.

1. Drain the coolant from the engine.
2. Fill system with clean water.

3. Add the required amount of a reputable commercially available de-scaling product (aluminum & copper compatible). It is important that product directions be thoroughly read and followed regarding duration of the treatment, temperature and product mix ratio).

CAUTION

Only use de-scaling products sold by a reputable manufacturer, product must be aluminum and copper compatible and must be safe for rubber hoses and gaskets.

Some de-scaling products will require the use of a neutralizing agent before coolant system refill

Carefully follow manufacturer's directions to avoid cooling system damage when using descaling products.

Never use "home brewed" descaling solution containing caustic or acid products not intended for cooling system descaling or having unknown active product concentration.

4. Drain descaling solution from the cooling system.
5. Refill with clean water and carefully rinse the cooling system to completely evacuate all remaining descaling solution.
6. On heavily contaminated system, reverse flush the cooling system to prevent remaining dirt and scale deposits from clogging the radiator tubes or being forced through the water pump (refer to paragraph 9.2 *Reverse Flushing* below).
7. Flush the system.
8. Refill system with appropriate coolant.

9.2 REVERSE FLUSHING

After the engine and radiator have been thoroughly de-scaled, they should be reverse-flushed. The water pump should be removed and the radiator and engine reverse-flushed separately to prevent dirt and scale deposits from clogging the radiator tubes or being forced through the pump. Reverse flushing is accomplished by hot water, under pressure, being forced through the cooling system in a direction opposite to the normal flow of coolant, loosening and forcing deposits out.

The radiator is reverse flushed as follows:

1. Remove the radiator inlet and outlet hoses and replace existing radiator cap with a new one.
2. Attach a hose to the top of the radiator to lead water away from the engine.
3. Attach a hose at the bottom of the radiator and insert a flushing gun in the hose.
4. Connect the water hose of the gun to the water outlet and the air hose to the compressed air outlet.
5. Turn on the water and when the radiator is full, turn on the air in short blasts, allowing the radiator to fill between blasts.

NOTE

Apply air gradually. Do not exert more than 138 kPa (20 psi) air pressure. Too great a pressure may rupture a radiator tube.

6. Continue flushing until only clean water is expelled from the radiator.

The cylinder block and cylinder head water passages are reverse flushed as follows:

1. Remove the thermostats and the water pump.
2. Attach a hose to the water inlet of oil cooler housing to drain water away from engine.
3. Attach a hose to the water outlet at the top of the cylinder head (thermostat housing) and insert the flushing gun in the hose.
4. Turn on the water until the jackets are filled, and then turn on the air in short blasts. Allow jackets to fill with water between air blasts.
5. Continue flushing until the water from the engine runs clean.

If scale deposits in the radiator cannot be removed by chemical cleaners and reverse flushing as outlined above, it may be necessary to remove the upper tank and rod out the individual radiator tubes with flat steel rods. Circulate the water through the radiator core from the bottom to the top during this operation.

10. SPIN-ON COOLANT FILTER

The optional engine cooling system filter is used to filter out impurities such as scale or sand from the coolant. The filter is mounted on the frame below the turbocharger inlet tube (Figure 10).

To replace a filter:

1. Close the filter shutoff cock on the filter mounting head and unscrew the old filter from mounting.

WARNING

Failure to relieve cooling system pressure may result in personal injury.

2. Remove and discard the filter. Recover the coolant remaining in the filter with a suitable container.
3. Clean the filter adapter with a clean, lint-free cloth.
4. Coat surface of gasket with clean antifreeze, tighten 2/3 to 1 turn after gasket makes contact with head.
5. Open the filter shutoff cock.
6. Start engine and check for leaks.

CAUTION

Do not exceed recommended service intervals.

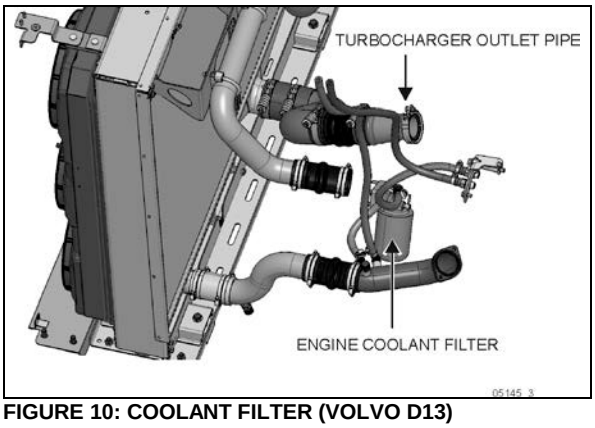

FIGURE 10: COOLANT FILTER (VOLVO D13)

MAINTENANCE

Coolant filter

Replace the coolant filter cartridge at the intervals specified by the Lubrication And Servicing Schedule in Section 24: LUBRICATION & SERVICING.

11. COOLING ASSEMBLY

The cooling assembly uses a total of 8 identical 12 inches (305mm) brushless (24V) electric cooling fans to dissipate the heat generated by the engine. The two first fans are used by the charge air cooler (CAC) to cool the hot compressed air coming from the turbocharger; the remaining 6 fans are used by the radiator.

Each fan is fixed to a shroud by 4 hex screws and is individually connected to the circuit breaker box through a main wiring harness (*refer to section 06 ELECTRICAL for more information regarding breaker box components and harness*).

The shroud assists in directing the air flow generated by the fans through the radiator/CAC assembly with maximum efficiency and is sealed to the radiator/CAC assembly (cooling pack) with rubber seals. The shroud is hinged and can be “pivoted” out of the way to inspect or clean the radiator/CAC fins and tanks.

A cover is installed over the shroud to protect the fan harness and connectors from the elements.

CAUTION

The fan shroud is an essential component used to achieve maximum air flow capacity through the cooling assembly. To prevent overheating, inspect rubber seal regularly to ensure proper sealing.

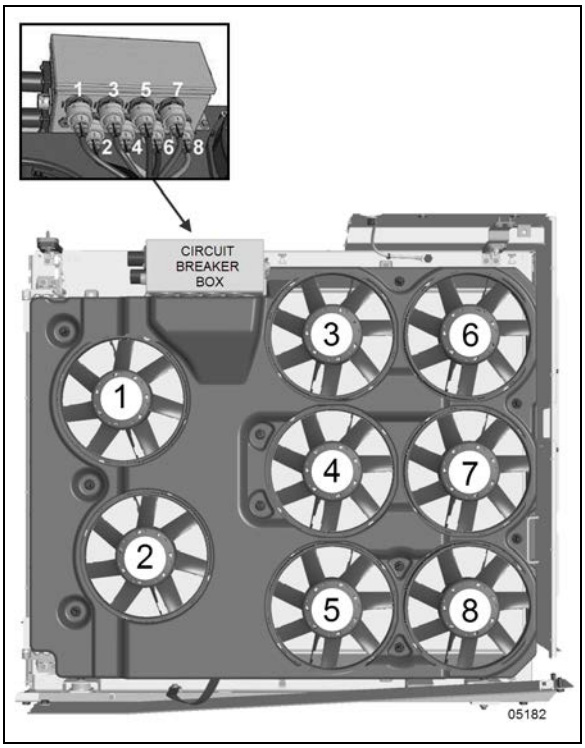

FIGURE 11: FAN ORDER AND CONNECTOR NUMBER AT CIRCUIT BREAKER BOX

11.1 MAINTENANCE

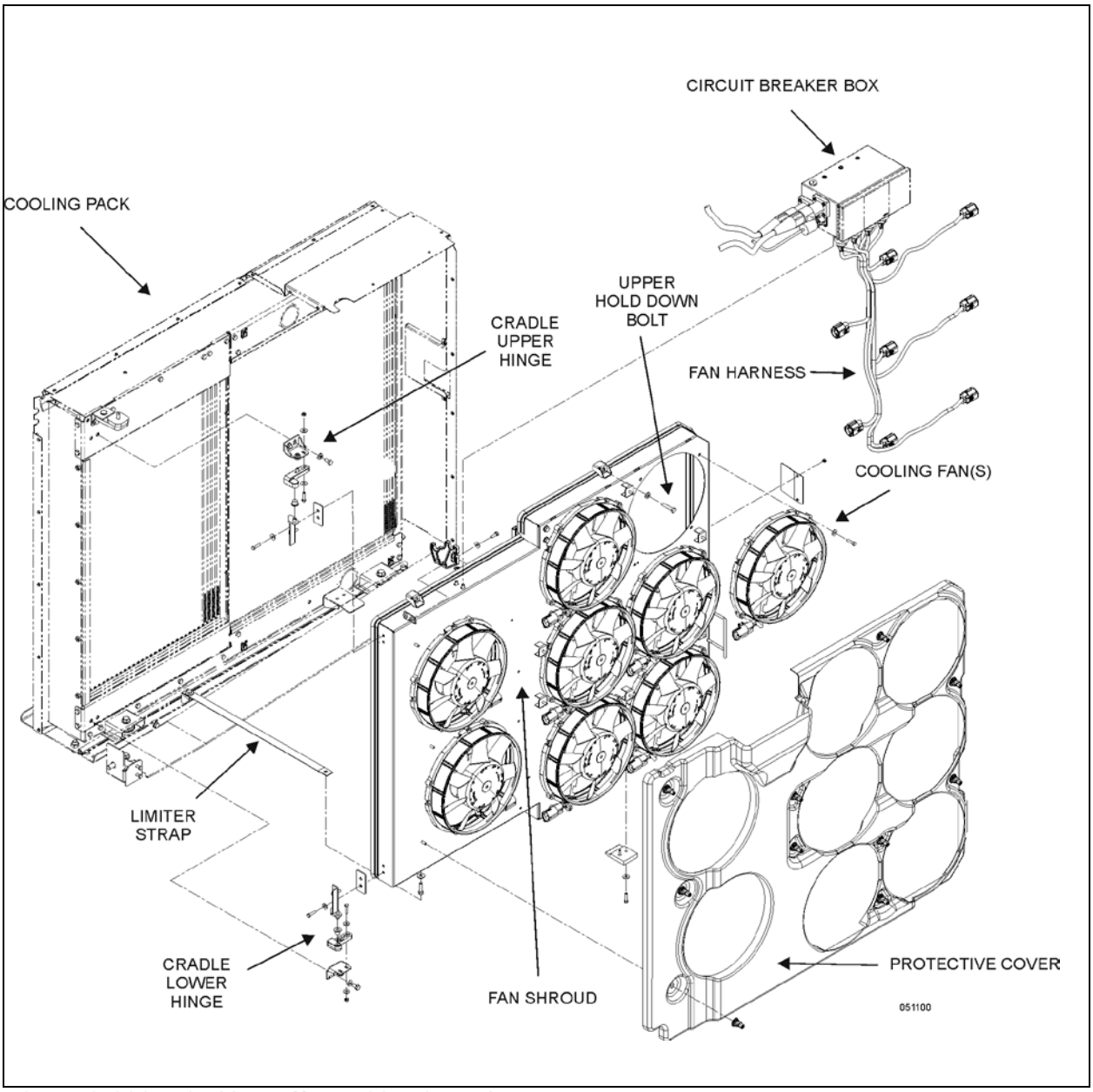

FIGURE 12: COOLING ASSEMBLY MAIN COMPONENTS

WARNING

Cooling fans may activate at any moment when engine is running.

Do not proceed to fan inspection or maintenance without first shutting down the engine.

WARNING

Cooling fans may start when the engine is shut down in the following conditions:

- If a High Exhaust Temperature condition exists (e.g. following regeneration).
- During “Motor Test” sequence.

MAINTENANCE

Inspect fan blades regularly, check for dirt or grime accumulations on the blade that could cause vibrations, clean as necessary using water and regular strength degreaser.

Check for cracks and signs of abrasion on the blades that could indicate contact with debris or obstruction during operation.

Check the bottom of the shroud cover and remove debris that could have accumulated. In sub-zero winter area, also check for snow and ice accumulation that could block the fan blades rotation.

Open the fan shroud as necessary (remove top and bottom hex screws shown below) to facilitate cleaning and debris removal.

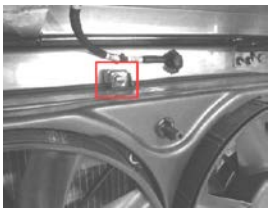

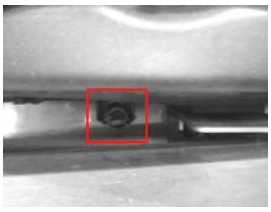

NOTE

Electric cooling fan motors are sealed and certified IP6K9K and IP68.They can therefore be safely power/pressure washed.

NOTE

To prevent a situation where debris would stick to the radiator door (due to fans suction force) and prevent full cooling performance, all fans are forced to stop for a period of 25 sec. every 30 minutes.

NOTE

To keep area between fans and shroud cover clean and, in winter, prevent snow and ice accumulation, a cleaning sequence, where the fans will run at full reverse speed for 30 sec. will take place the first time the vehicle reaches 30 km/h (19 mph) after start-up.

A winter cleaning mode will also take place if exterior temperature drops below 0°C (32°F) and will activate the fans at full reverse speed for 30 sec every 30 min.

CAUTION

Fans are factory balanced by the use of small metal weight clipped to the fan blades, to avoid damaging vibrations during fan operation, do not remove, shift or interchange balancing weights.

11.2 COOLING FAN REPLACEMENT

Proceed as follow to remove one (or more) individual fan from the shroud.

1. Remove the cooling fan shroud cover by unscrewing the 10 plastic fasteners holding it to the fan shroud.

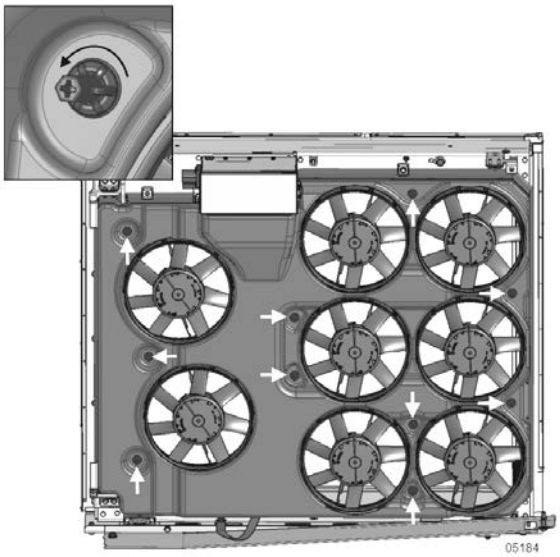

FIGURE 13: SHROUD COVER FASTENER LOCATION

2. Unplug the fan from the main fan harness (blue connector).
3. Remove the 4 hex screws holding the fan body to the shroud.
4. Remove the fan.

5. Reverse removal procedure to reinstall the fan and apply specified torque to the fan frame mounting screws.

TORQUE: 30 lb-in (3 Nm)

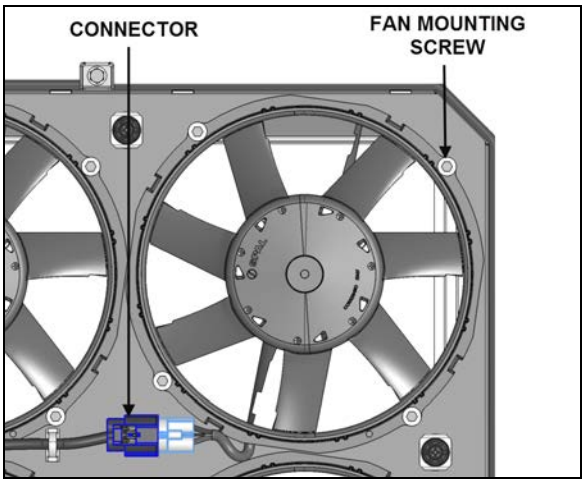

FIGURE 14: CONNECTOR & MOUNTING SCREW LOCATION

11.3 COOLING FAN SHROUD REMOVAL & INSTALLATION

1. Open rear engine door and set starter selector switch to the OFF position.

2. Open the radiator door and disconnect the door support arm to allow full door opening (optional).

NOTE
If fan shroud is removed in preparation for the removal of the complete cooling assembly (see 11.4 in this section), the radiator door must be removed from the vehicle. – *Open and support door.* – *Disconnect side marker lights.* – *Remove light harness from door.* – *Unscrew lower hinge from vehicle.* – *Lift and remove door.* *See section 18b BODY X-Series for more information.*

3. Disconnect the cooling fans circuit breaker box.
   - Turn the two main harness (black and red) connectors half a turn counterclockwise and pull.
   - Turn the smaller wiring connector 1/3 turn counterclockwise.
   - Remove the wires from the wire separator and move them out of the way.

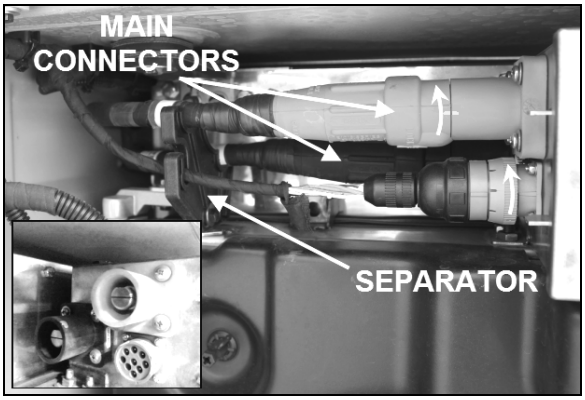

FIGURE 15: CIRCUIT BREAKER BOX CONNECTIONS

4. Remove the shroud upper and lower hold down screws and open the shroud assembly (yellow handle).

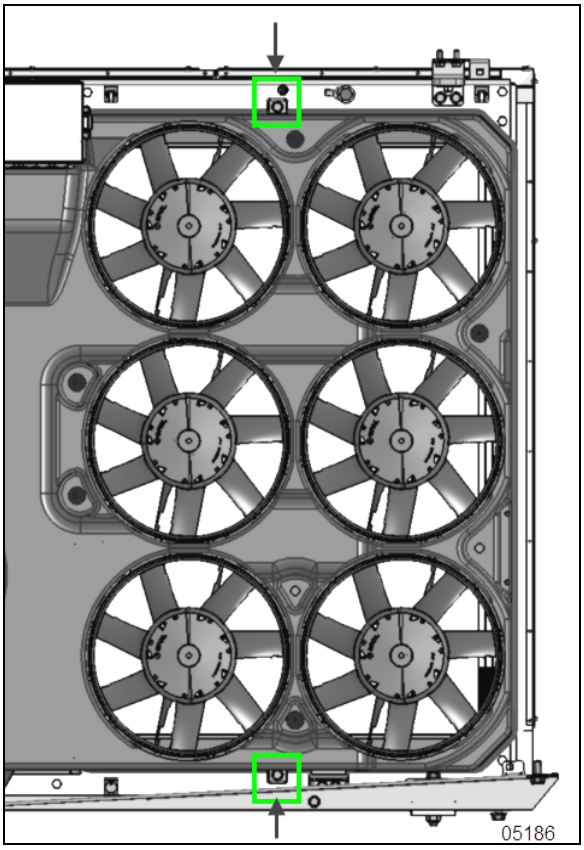

FIGURE 16: SHROUD HOLD DOWN SCREWS

5. Unfasten the limiter strap at the bottom of the shroud assembly.

6. Support the bottom of the shroud assembly with a lift table or other suitable equipment.

7. Unscrew the shroud upper hinge at the vehicle structure and remove the hinge.

> ***NOTE***
>
> *It is good practice to scribe the hinge position on the vehicle structure to use as a reference point upon reinstallation. This will minimize the need for hinge adjustment.*

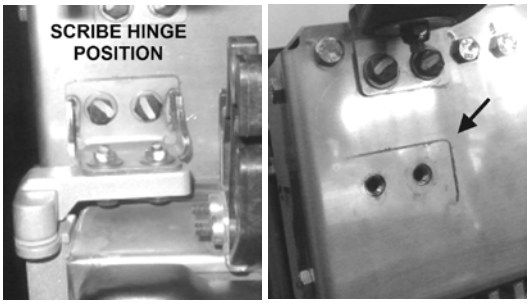

8. Slightly lift the door with the lift table to disengage the lower hinge pin and allow shroud removal from the vehicle.

> ***NOTE***
>
> *Do not lose the plastic bushings installed at the pivot point of both lower and upper hinges.*

9. Reverse removal procedure to reinstall the fan shroud assembly making sure that;

   - The bushings are installed at the hinges pivot point.
   - There is no gap at both hinges between the bushing and the hinge pivot.
   - Main connectors are fully engaged (paint mark are aligned).

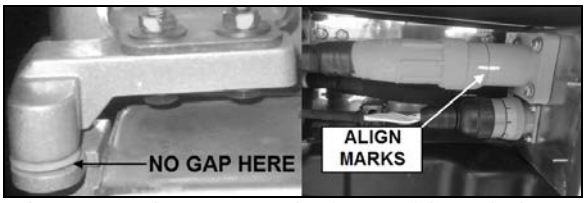

FIGURE 17: INSTALLED HINGE & MAIN CONNECTOR

11.4 COOLING PACK (RADIATOR & CAC) REMOVAL & INSTALLATION

> ***NOTE***
>
> *For CAC only replacement, removal of the entire cooling pack is not necessary. Refer to paragraph 11.5 in this section for "in vehicle" CAC replacement instructions.*

> **WARNING**
>
> **GALVANIC CORROSION PREVENTION**
>
> *Galvanic corrosion (also called bimetallic corrosion or contact corrosion) is an electrochemical process in which one metal corrodes preferentially to another when both metals are in electrical contact.*
>
> To avoid galvanic corrosion problems, the aluminum CAC and radiator have been electrically isolated from the cooling pack stainless frame.
>
> When replacing the <u>entire cooling pack</u> with a new unit, make sure <u>before installation</u> that :
>
> – There is no conductivity between the frame and both CAC and radiator core using a suitable ohmmeter or continuity (buzzer) tester.
>
> *Note: If using ohmmeter, a <u>minimum of 100 000 (100K) ohms</u> must be observed to be considered acceptable for installation.*

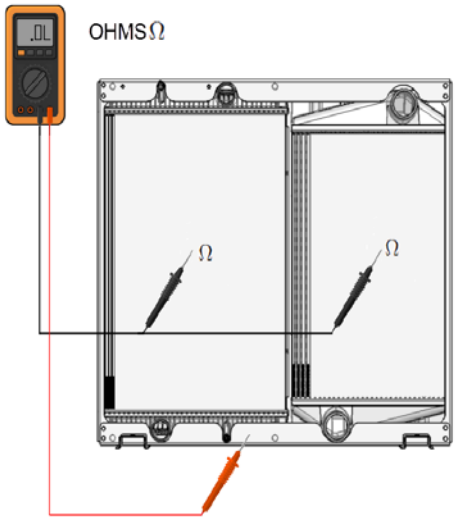

When replacing the CAC or radiator unit only, ensure that:

- The rubber seal is present all around the radiator perimeter and that it is in good condition (replace as necessary).
- Both rubber strips (upper & lower) are present and in good shape at the edge of the upper and lower support section (fan side only).

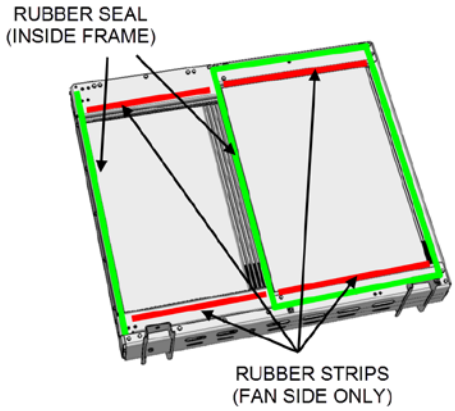

- Both uppers and lowers CAC insulating bushings & washers are present and in good condition at the CAC mounting points (replace as necessary).

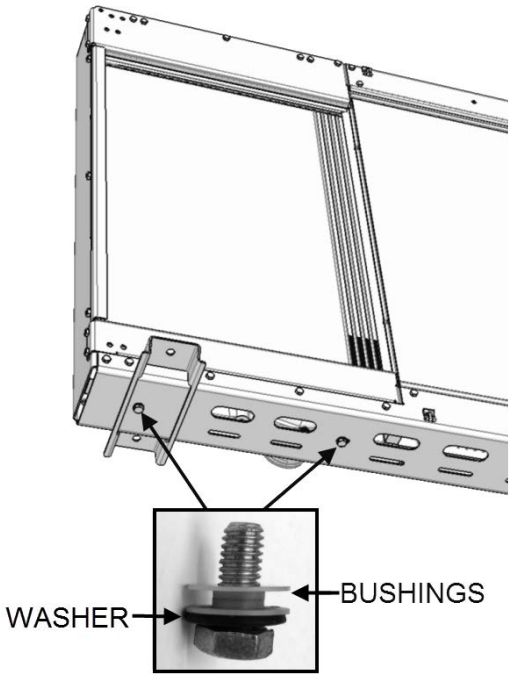

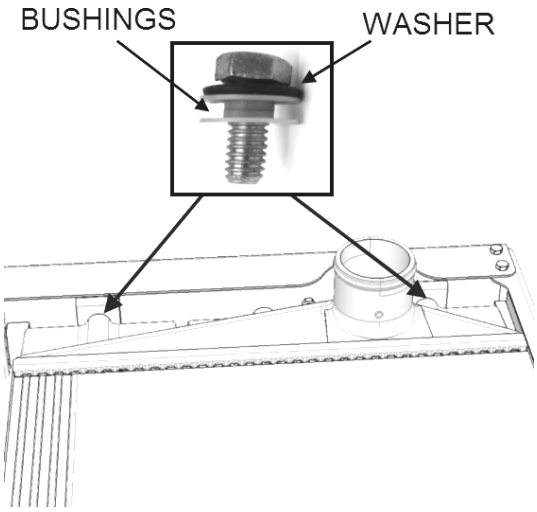

After all the frame sections have been reassembled, check for conductivity between CAC/radiator core and frame *(min 100 000 ohms must be observed).*

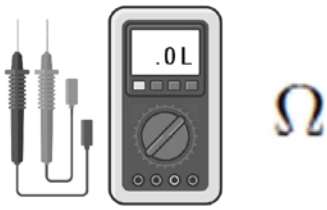

1. Open rear engine compartment door.
2. Set starter selector switch to the OFF position.
3. Raise L.H. side hinged rear fender.

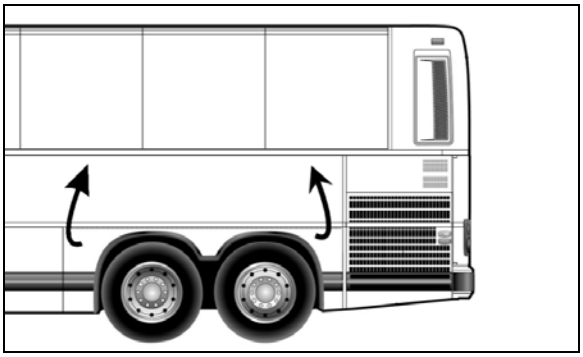

FIGURE 18: RAISING REAR FENDER

4. Remove access panel located behind L.H tag axle wheel.

5. Access the heater shut-off valve located behind the access panel and set it to the closed position.

6. Set the second heater shut-off valve, located in the engine compartment below the turbocharger outlet to CAC pipe, at the closed position.

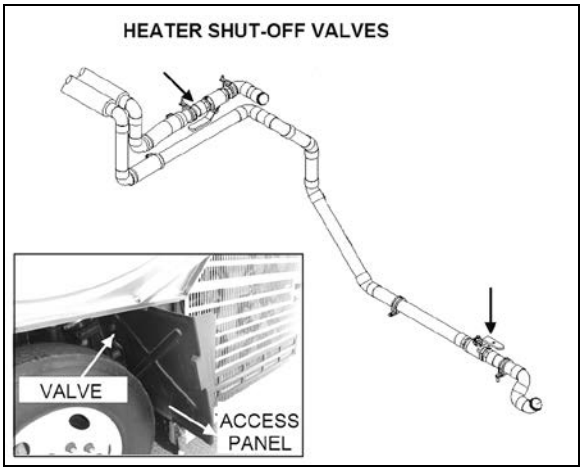

FIGURE 19: HEATER SHUT-OFF VALVES POSITION

7. Connect coolant extractor to the radiator drain cock and drain the coolant system as per *Draining cooling system in paragraph 7 of this section.*

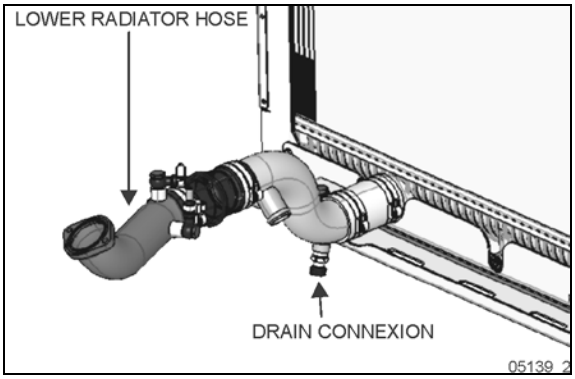

FIGURE 20: COOLANT DRAIN EXTRACTOR CONNECTION

DANGER

Risk of poisoning. Do not drink coolant. Use proper hand protection when handling. Keep coolant out of reach of children and animals.

8. Disconnect the upper radiator pipe *at the pipe junction* between the radiator and the engine.

9. Also disconnect the upper CAC pipe at the *mid pipe junction*.

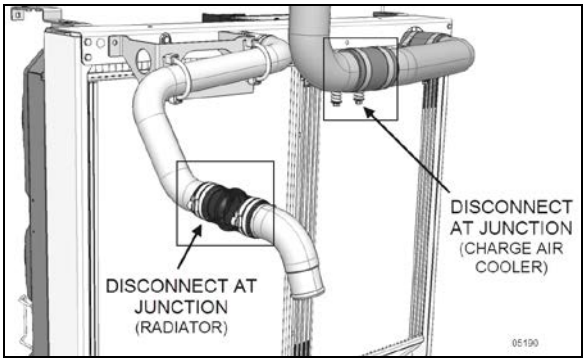

FIGURE 21: RADIATOR & CAC UPPER CONNECTION

10. Disconnect the radiator lower pipe directly at the radiator outlet.

11. Disconnect the lower CAC pipe (turbo outlet).

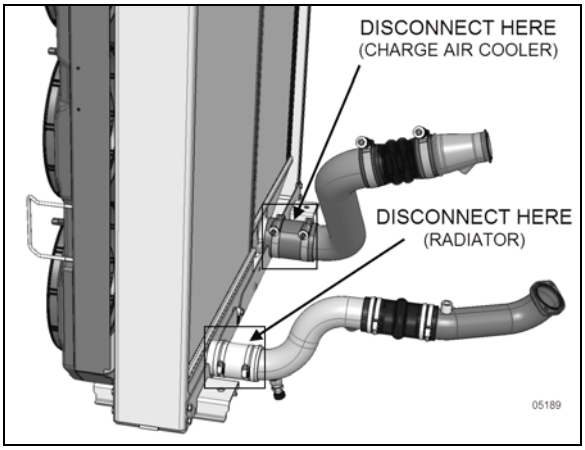

FIGURE 22: RADIATOR & CAC LOWER CONNECTION

12. Proceed to the cooling fan shroud removal following *paragraph 11.3* of this section (radiator door must be removed).

13. Disconnect the ground connection at the upper right corner of the cooling assembly.

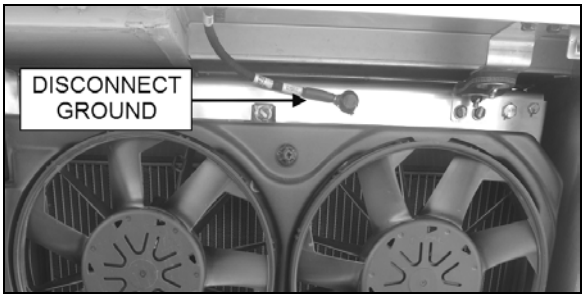

FIGURE 23: COOLING ASSEMBLY GROUND

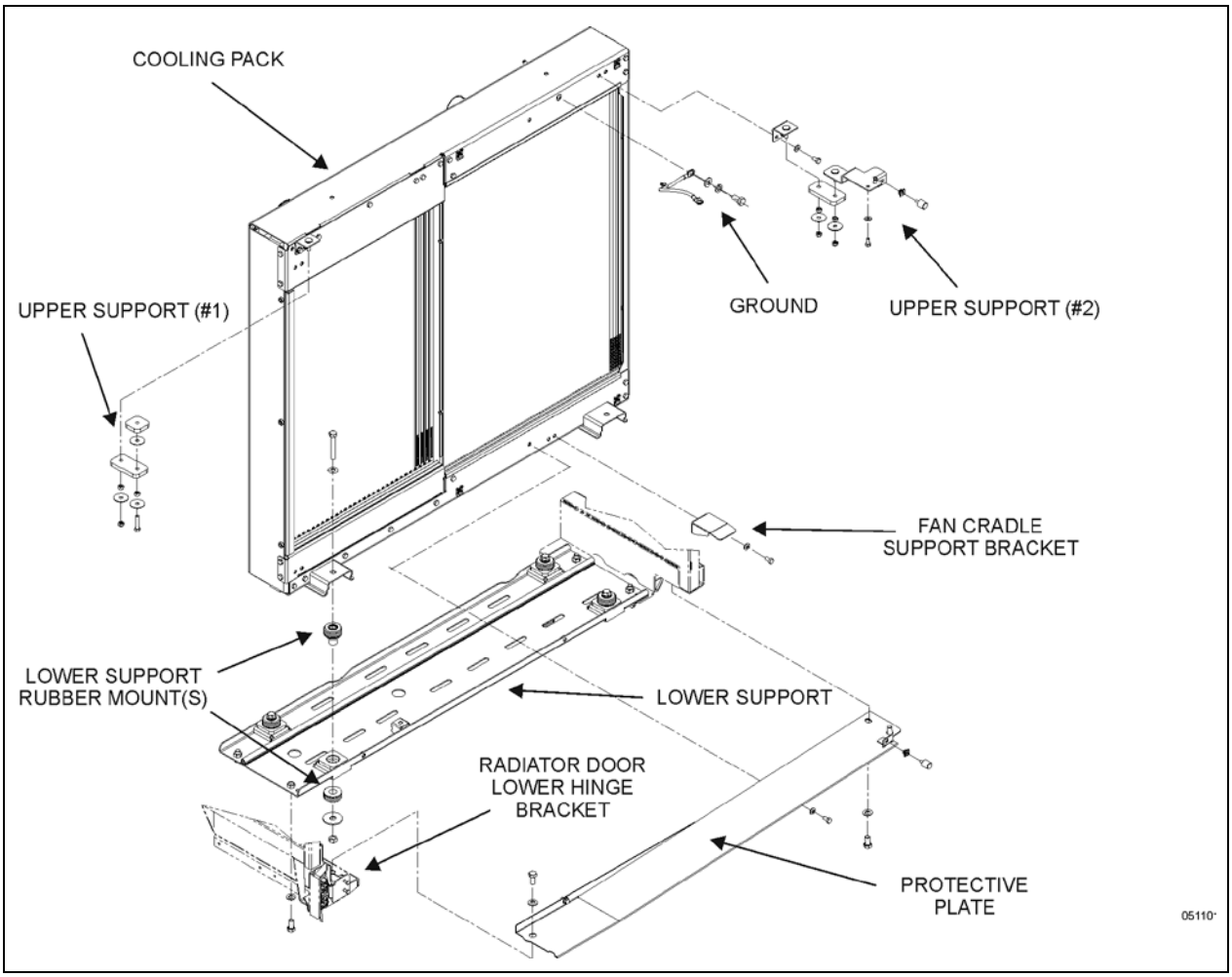

FIGURE 24: COOLING PACK SUPPORTS AND COMPONENTS

14. Remove the radiator door lower hinge bracket.

FIGURE 25: RADIATOR DOOR LOWER HINGE BRACKET

15. Remove the protective (splash) plate fixed to the cooling pack lower support.

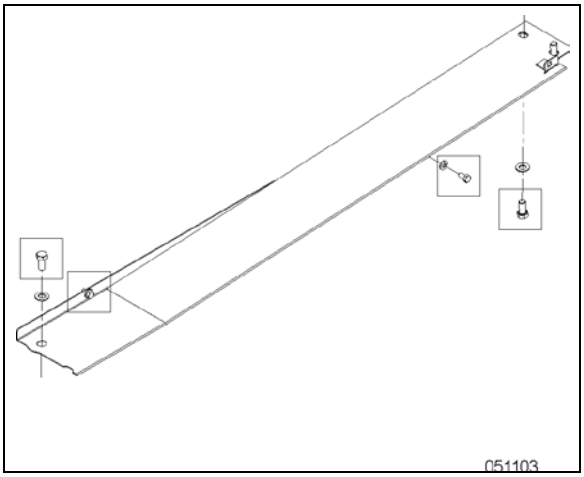

FIGURE 26: PROTECTIVE PLATE MOUNTING BOLTS

16. Support the cooling assembly with a lift table positioned under the lower support.

17. Unscrew the lower support from the vehicle (two hex bolts at each end of the support).

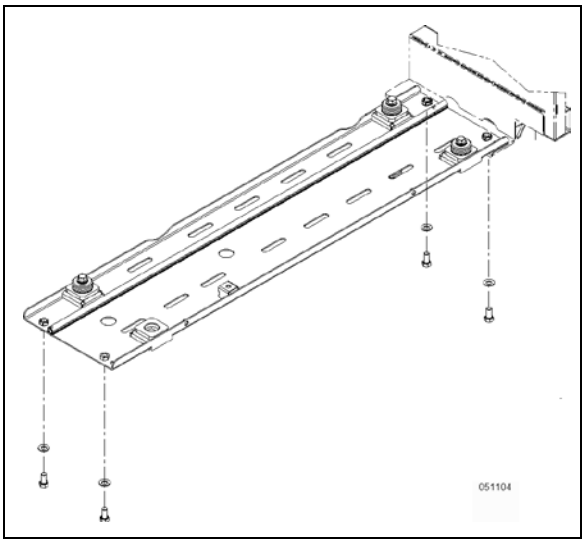

FIGURE 27: LOWER SUPPORT MOUNTING BOLTS

18. Unscrew the two upper supports from the vehicle structure so they will be removed with the cooling assembly.

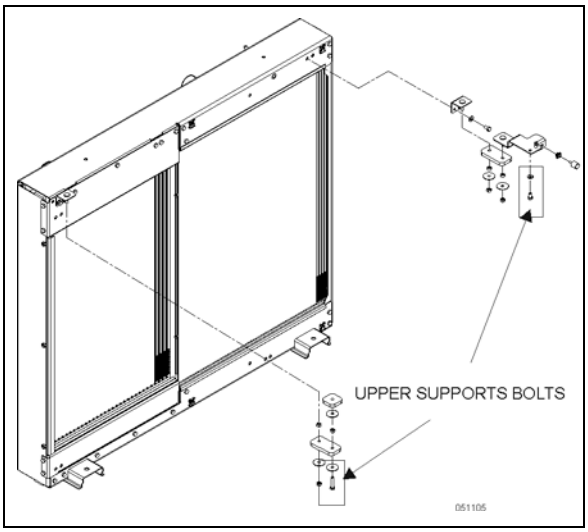

FIGURE 28: UPPER SUPPORTS MOUNTING BOLTS

19. Slightly lift the assembly and slide it out of the vehicles.
    - Check interference at the back of the assembly with the pipe sections still attached to the assembly and the vehicle structure (slack hose clamps and turn down tubes as necessary).

20. To proceed to the *radiator replacement*, remove radiator upper pipe section, bracket and hardware, unbolt the four support bolts passing through the radiator and holding it to the frame (upper & lower) also unbolt the cooling pack frame upper and lateral sections and slide the old radiator out.

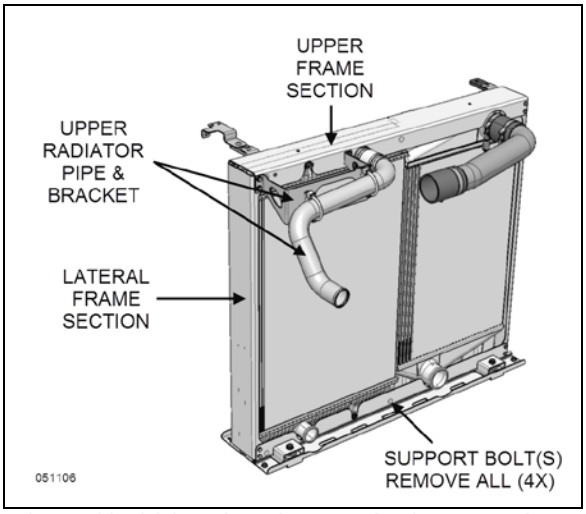

FIGURE 29: COOLING PACK PARTS TO BE REMOVED FOR RADIATOR REPLACEMENT

21. Insert a new radiator in the lower support making sure that insulating foam is installed all around the radiator body.

22. Reinstall the four support bolts and the upper and lateral frame sections only (*go to step 24 below*) Torque all support bolts and frame bolts to specified torque below.

TORQUE: 9 lb-ft (12 Nm)

23. To proceed to the *complete cooling pack replacement*, ignore steps 20 to 22 above and remove and transfer to the new assembly:
    - Both upper supports & brackets
    - Lower support & rubber mounts
    - Shroud support bracket
    - Lower hinge & hinge bracket

    Torque all brackets to specified torque.

TORQUE: 9 lb-ft (12 Nm)

NOTE
Reinstallation of the cooling components as a complete assembly is recommended. *- Install fan shroud on the cooling pack frame then install complete assembly to vehicle structure.*

24. Lay the cooling pack horizontally at working height (use large workbench or sawhorses) exterior face pointing up.

25. Install fan shroud in position over the cooling pack (make sure the lower hinge is correctly assembled with plastic bushing in place).

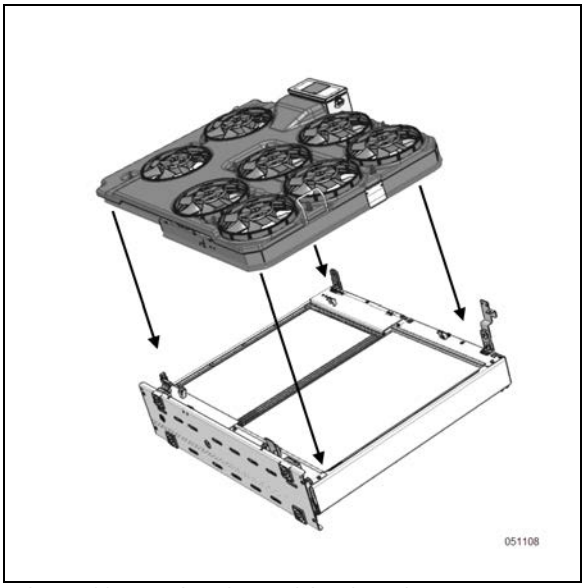

FIGURE 30: FAN SHROUD POSITIONING

26. Partially screw down the both upper and lower shroud hold down screws to position the shroud

27. Loosely install the hinges.

28. Adjust the shroud in its final position.

- There should be no gaps between the hinge pivot point and the plastic bushing (upper & lower hinges).

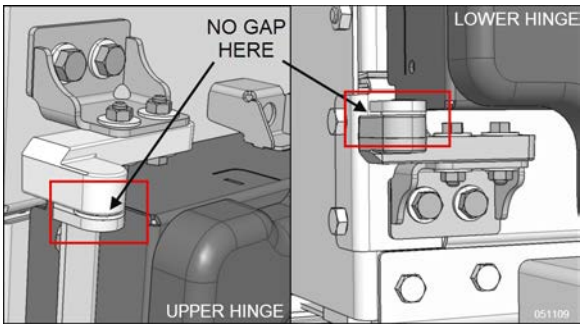

FIGURE 31: SHROUD HINGES INSTALLATION

- The bottom of the shroud should fit flat (parallel) against the shroud lower support.

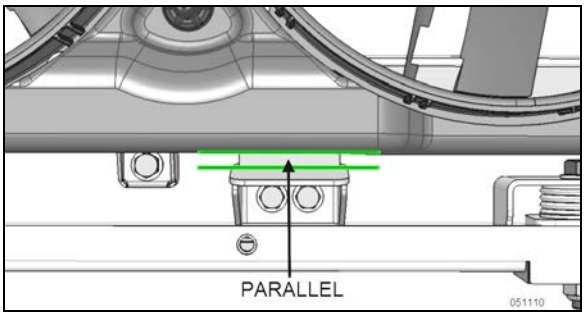

FIGURE 32: FAN SHROUD PARALLEL TO SUPPORT

29. Tighten hinges and hold down bolts.

TORQUE: 68 lb-in (8 Nm)

30. Put back the cooling assembly in its vertical position on a small lift table.

31. Reinstall the upper CAC and radiator pipe sections (including bracket and hardware).

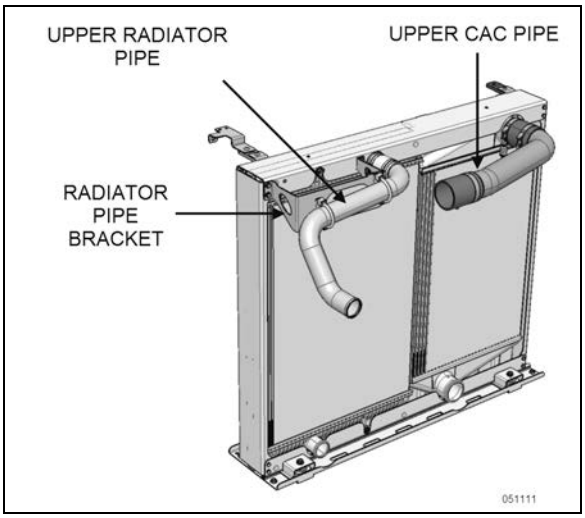

FIGURE 33: INSTALLED RADIATOR & CAC UPPER PIPES

32. Slide back the cooling assembly into position and reverse removal procedure to reinstall in vehicle.

33. Make sure that there is no conductivity between the CAC/radiator units and the cooling pack frame (*see note at the beginning of paragraph 11.4)*.

34. Fill the vehicle cooling system.

35. Set starter selector switch to the ON position, start the engine and check for coolant leaks.

11.5 CHARGE AIR COOLER (CAC) IN VEHICLE REMOVAL

In the event that the charge air cooler (CAC) would require replacement or in cases where access to the engine hot side and/or turbocharger would be required. It is possible to remove the CAC from the vehicle without removing the complete cooling pack thereby eliminating the need to drain and refill the vehicle cooling system.

NOTE
Spec for CAC acceptable leakage: *The CAC is considered acceptable if it can hold 30 psi (206 kPa) gauge pressure with less than 1 psi (6.9 kPa) loss in 60 seconds.* *This spec does not apply if there is any evidence that the leak was caused by a foreign object impact.*

1. Open rear engine compartment door.

2. Set starter selector switch to the OFF position.

3. Proceed to the cooling fan shroud removal following *paragraph 11.3* of this section.

4. Disconnect the lower CAC pipe.

5. Disconnect the upper CAC pipe at the middle section junction, also loosen the hose clamps at the CAC connection and pivot down the pipe to clear radiator.

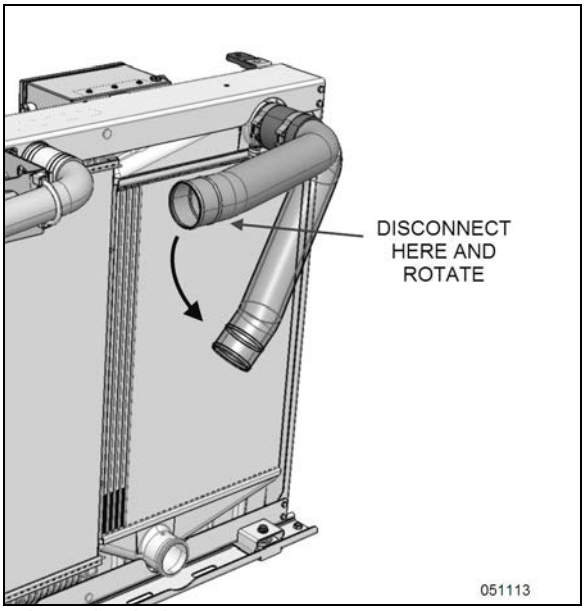

FIGURE 34: CAC UPPER PIPE

6. Unscrew the upper cooling pack support from the vehicle structure (CAC side support only).

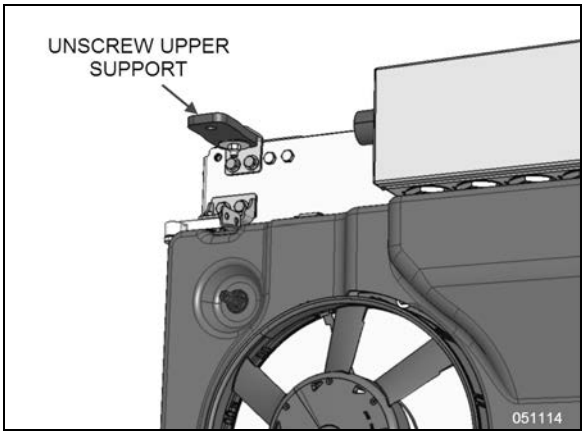

FIGURE 35: UPPER SUPPORT (CAC SIDE)

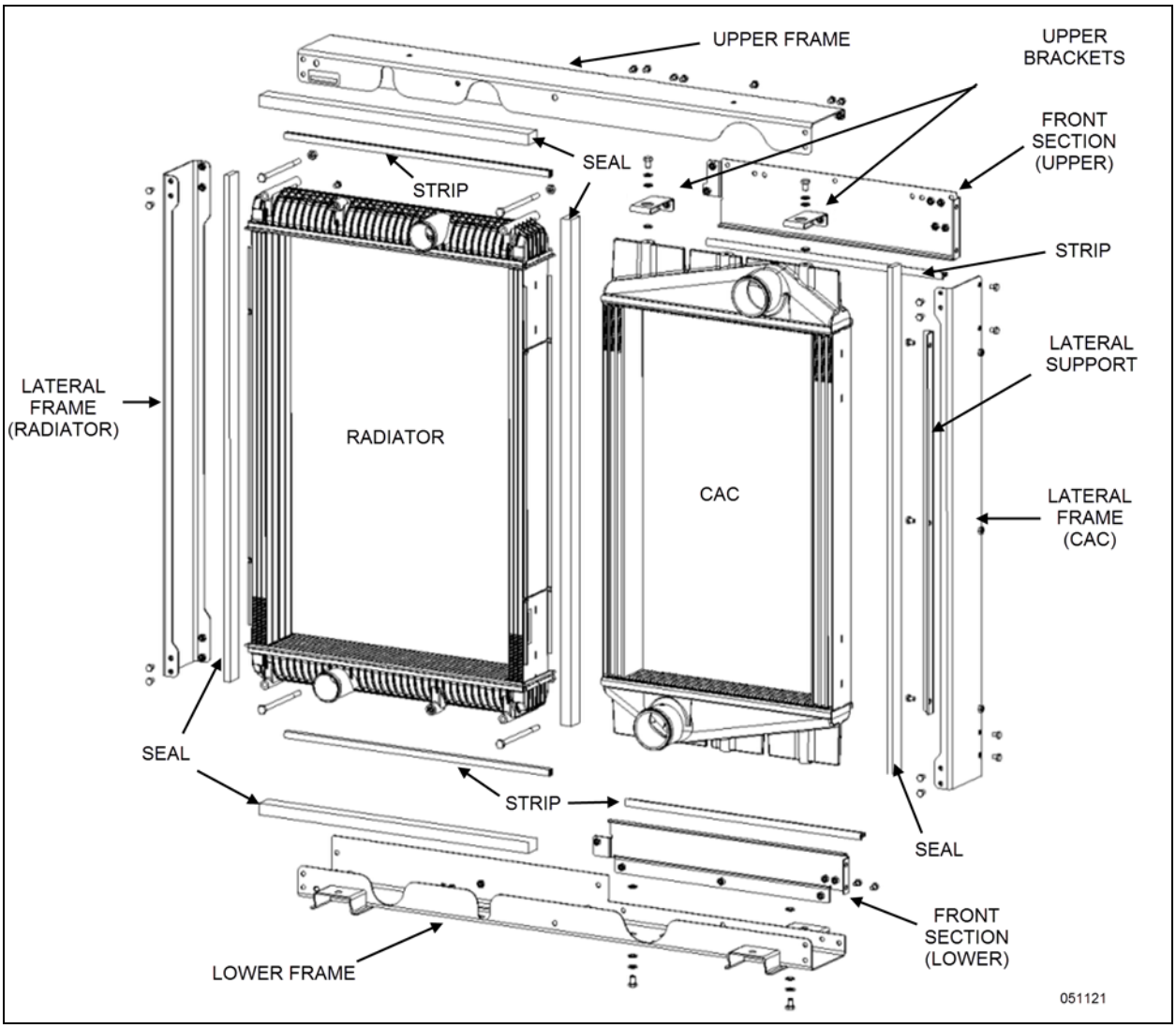

FIGURE 36: COOLING PACK EXPLODED VIEW

7. Remove CAC upper front frame structure by unscrewing the 11 hex bolts holding it.

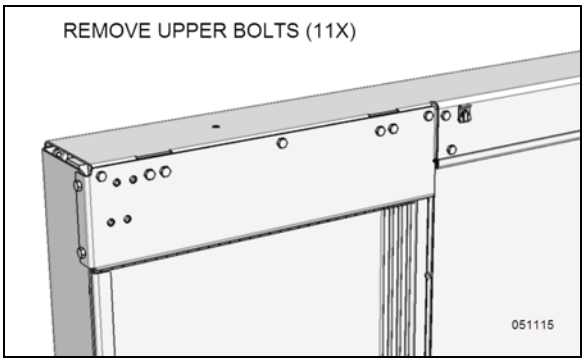

FIGURE 37: UPPER FRAME BOLTS

8. Remove the CAC lower front frame structure by unscrewing the 8 hex bolts holding it.

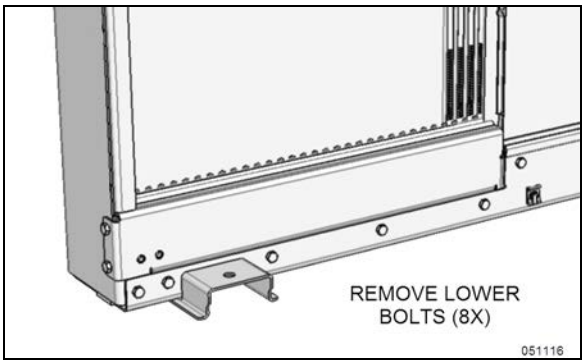

FIGURE 38: LOWER FRAME BOLTS

9. Also remove the CAC lateral support (3 hex bolts).

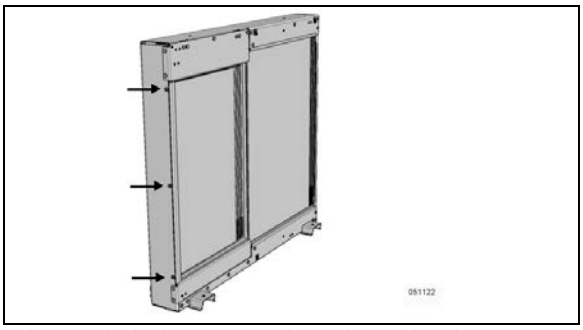

FIGURE 39: CAC LATERAL SUPPORT BOLTS

10. From under the vehicle, unscrew the CAC from the lower support (two hex bolts with plastic insulating bushings).

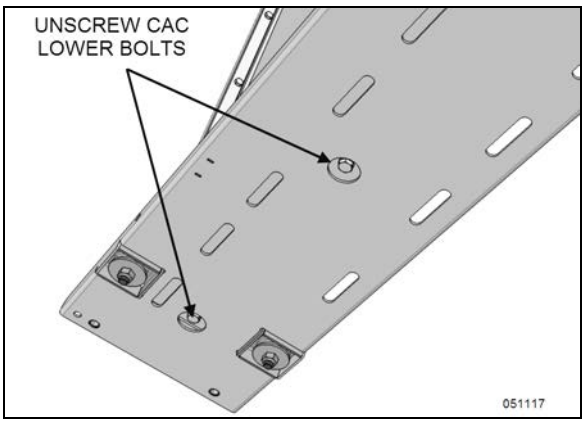

FIGURE 40: LOWER CAC INSULATED BOLTS

11. Remove CAC (and two upper brackets) from the vehicle.

12. If a new CAC is to be installed, transfer the upper CAC pipe and upper brackets to the new unit. Torque upper brackets with plastic bushings & washers to specified torque.

TORQUE: 9 lb-ft (12 Nm)

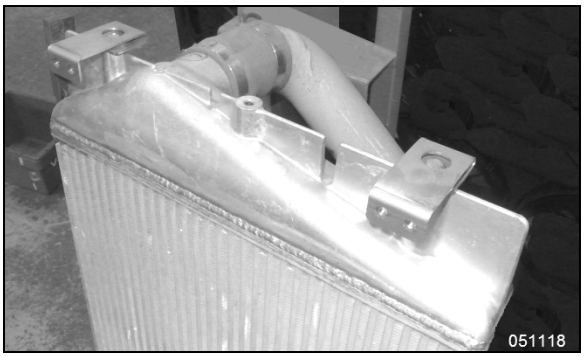

FIGURE 41: CAC UPPER BRACKETS & PIPE

WARNING

To prevent galvanic corrosion, the CAC upper brackets need to be electrically insulated from the CAC body.

When reinstalling brackets, make sure the plastic insulating bushings (two per bracket) & washers (one per bracket) are present and in good condition (replace as necessary).

After installation, check for proper insulation (lack of conductivity) between brackets and CAC body with a suitable ohmmeter or continuity tester (buzzer).

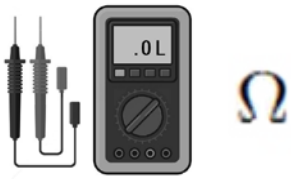

13. In preparation for reinstallation of the CAC, install the inner insulating bushings in their location (lower support).

NOTE

To ease installation and ensure that the bushings will not move during reinstallation, use common masking tape to hold the inner bushings to the lower support.

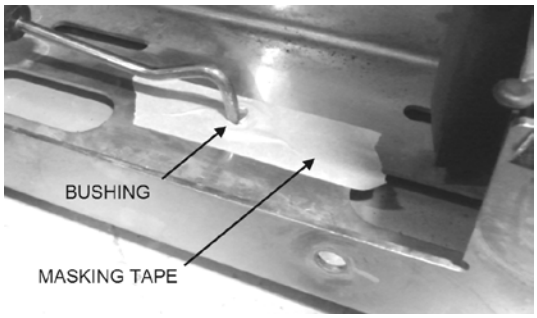

14. Install CAC on the vehicle and secure to the lower support using both lower hex bolts, washers and remaining plastic insulating bushings.

TORQUE: 9 lb-ft (12 Nm)

WARNING

To prevent galvanic corrosion, the CAC is electrically insulated from the support by the use of plastic insulating bushings.

When reinstalling brackets, make sure the plastic insulating bushings (two per bracket) & washers (one per bracket) are present and in good condition (replace as necessary).

After installation, check for proper insulation (lack of conductivity) between support and CAC body with a suitable ohmmeter or continuity tester (buzzer).

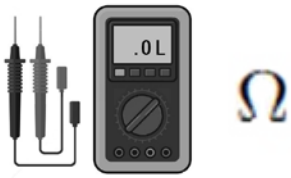

15. Reinstall both (upper and lower) front frame sections.

TORQUE: 9 lb-ft (12 Nm)

16. Secure upper support to the vehicle structure.

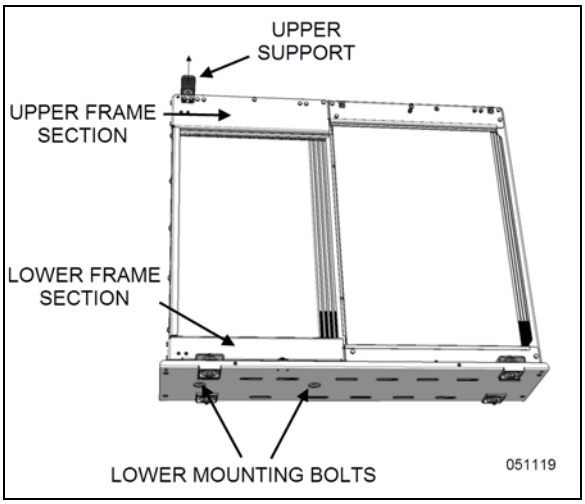

FIGURE 42: CAC IN VEHICLE

17. Double check for lack of continuity between CAC body and vehicle structure (*see note at the beginning of paragraph 11.4 for reference).*

18. Reconnect upper CAC pipe and tighten hose clamps at both ends.

19. Reconnect lower CAC pipe.

20. Proceed to the fan shroud reinstallation (*refer to paragraph 11.3 earlier in this section*).

21. Set starter selector switch to the ON position and start the vehicle.

22. Check for CAC leakage at the pipe connections.

12. SPECIFICATIONS

Cooling System Capacity (Approximation)

Includes heating system ..... 26 US gal (99 liters)

Cooling System Fans

Number used 8
Diameter ..... 12 in (30.5 cm)
Power 850W
Voltage (nominal) ..... 24 Volts
Voltage (operating range) ..... 16-32 Volts
Maximum speed ..... 4760 rpm
Sealing ..... SAE J1455 IP67 / IP69K
Operating temperature range ..... -40 to 138°F (-40 to 59°C)

Thermostat - Volvo D13 Engine

Number used 1
Start to close ..... 203°F (95°C)
Fully closed ..... 185°F (85°C)

Coolant (ELC) - Volvo D13 Engine

Volvo Number 20358716
Texaco CPS 227998
Chevron CPS 227811

Coolant Filter Cartridge – Volvo D13 Engine

Number used 1
Type ..... Spin-on
Prevost number 20458771

CONTENTS

SECTION CHANGE LOG 4

1. TORQUE TABLES 5

1.1 ALTERNATORS AND SURROUNDING COMPONENTS 5
1.2 ELECTRICAL CONNECTIONS AND BATTERIES 6

2. GENERAL DESCRIPTION 7

2.1 WIRING DIAGRAMS 7
2.1.1 Using Wiring Diagrams 7
2.1.2 Testing Circuits 8
2.2 WIRE SIZES AND COLORS 8
2.3 SPARE WIRES 8
2.4 CIRCUIT BREAKERS 9
2.4.1 H3 coaches 9
2.4.2 H3-45 VIP 10
2.5 MULTIPLEX FUSES 10
2.6 RELAYS 10
2.7 PRECAUTIONS 10

3. ELECTRICAL COMPARTMENTS 13

3.1 MAINTENANCE 13
3.2 MAIN POWER COMPARTMENT 13
3.2.1 Battery Charger Or In-Station Lighting Connector 14
3.3 FRONT ELECTRICAL AND SERVICE COMPARTMENT 14
3.4 ENGINE REAR START PANEL 14
3.5 A/C AND HEATING CONTROLS 15
3.6 PNEUMATIC ACCESSORY PANEL 15

4. BATTERIES 15

4.1 GROUP 31 MAINTENANCE FREE BATTERIES 16
4.2 GROUP 31 AGM BATTERIES 16
4.3 BATTERY DISCHARGE PROTECTION 19
4.4 MAIN BATTERY RELAYS 19
4.5 BATTERY REMOVAL AND INSTALLATION 19
4.6 BATTERY RATING 20
4.7 BATTERY TESTING 20
4.7.1 Visual Inspection 20
4.7.2 Removing Surface Charge 20
4.7.3 Load Test 20
4.7.4 Testing Battery Cables 21
4.8 BATTERY CHARGING 21
4.8.1 Battery Charging Guide 23
4.8.2 Emergency Jump Starting With Auxiliary (Booster) Battery. 24
4.9 AGM BATTERY CHARGING PRECAUTIONS 25
4.10 BATTERY EQUALIZATION AND AGM BATTERIES 25
4.11 CLEANING AND INSPECTION 25
4.12 COMMON CAUSES OF BATTERY FAILURE 25
4.13 TROUBLESHOOTING 26
4.14 "BATTERY VOLTAGE WARNING" PICTOGRAM 26
4.14.1 Voltage Gauge Definitions 26

4.14.2 BATTERY warning Pictogram MAY appear as a reminder 26

5. PRIME ENERGY MANAGEMENT SYSTEM 27

5.1 DESCRIPTION 27
5.2 COMPONENTS 27
5.2.1 Vanner 80 Series Battery Equalizer Fault Codes 29
5.3 DID DISPLAY 30

6. TROUBLESHOOTING AND TESTING THE MULTIPLEX VEHICLES 30

6.1 PROBING VOLTAGE ON THE MULTIPLEX CIRCUITS 30
6.2 CAN NETWORK 30
6.2.1 CAN Connection On The Telltale Panel And The Hvac Control Unit 30
6.2.2 Spare CAN 31
6.3 ELECTRICAL SYSTEM DIAGNOSTIC 31
6.4 MULTIPLEX INPUT TEST MODE 31
6.5 MOTOR TEST SEQUENCE 33
6.5.1 Test Sequence – Coaches only 33
6.5.2 Test Sequence – VIP With Central HVAC System 34
6.5.3 Test Sequence – VIP With Small HVAC System 34
6.6 FORCED ACTIVATION OF THE RADIATOR FAN CLUTCH 35
6.7 CAN NETWORK LAYOUT AND TROUBLESHOOTING 36
6.8 TROUBLESHOOTING 41
6.9 ESSENTIAL FUNCTIONS TO OPERATE THE VEHICLE 46
6.9.1 Available Functions 46
6.10 LOWER PRIORITY MODULES FOR BREAKDOWN SERVICE 46
6.11 MULTIPLEX MODULES 46
6.11.1 MCM 46
6.11.2 IO-A 46
6.11.3 IO-B 46
6.12 MULTIPLEX MODULES REPLACEMENT 47
6.12.1 Replacing IO-A Or IO-B Modules 47
6.12.2 Replacing the MCM Module 47
6.12.3 Uploading the vehicle specific multiplex program in the MCM 48

7. BOSCH ALTERNATORS 48

7.1 IDENTIFYING A DEFECTIVE ALTERNATOR 48
7.1.1 Identifying a Defective Alternator Using the Instrument Cluster DID 48
7.1.2 Identifying a Defective Alternator – Back-probing A49 Multiplex Module 48
7.2 ALTERNATOR DRIVE BELT 49
7.3 ADJUSTMENT 49

8. BATTERY EQUALIZER 49

9. STARTER 49

10. ENGINE BLOCK HEATER 50

10.1 MAINTENANCE 50

11. H3 SERIES EXTERIOR LIGHTING 50

11.1 HEADLIGHTS 50
11.1.1 Headlight Beam Toggle Switch 50
11.1.2 Maintenance 50
11.1.3 Replacing headlight bulbs 50

11.1.4 Replacing Front Turn Signal LED module 51
11.1.5 Optional Xenon Headlamp (Low Beam) 51
11.1.6 Aiming headlights 52
11.2 STOP, TAIL, DIRECTIONAL, BACK-UP, AND HAZARD WARNING LIGHTS 53
11.2.1 Lamp Removal And Replacement 53
11.2.2 High-Mounted Stop Light Removal And Replacement 53
11.3 LICENCE PLATE LIGHT 55
11.4 CLEARANCE, IDENTIFICATION AND MARKER LIGHTS 55
11.4.1 Marker Light Removal And Replacement 55
11.4.2 Clearance And Identification Light Removal And Replacement 55
11.5 DOCKING AND CORNERING LIGHTS 55
11.6 LAMP REMOVAL AND REPLACEMENT 55
11.7 FOG LIGHTS 55
11.7.1 Bulb Removal And Replacement 56

12. H3 SERIES INTERIOR LIGHTING 56

12.1 CONTROL PANEL LIGHTING 56
12.1.1 Switch Lighting 56
12.1.2 Telltale Light Replacement 56
12.1.3 Gauge Light Bulb Replacement 57
12.2 STEPWELL LIGHTS 57
12.2.1 Coach Entrance 57
12.2.2 VIP Entrance 57
12.2.3 Bulb Removal And Replacement 58
12.3 LAVATORY NIGHT-LIGHT 58
12.3.1 Bulb Removal And Replacement 58
12.3.2 DRIVER'S AREA LIGHTS 58
12.3.3 Bulb Removal And Replacement 59
12.4 PASSENGER SECTION LIGHTING 59
12.4.1 Fluorescent Tube Replacement 59
12.4.2 Removal And Replacement Of In-Station Fluorescent Tubes 59
12.4.3 Removal And Replacement Of Reading Lamp Bulb 60
12.5 ENGINE COMPARTMENT LIGHTING 60
12.6 LAVATORY LIGHT 60

13. LIGHT BULB DATA 60

14. SPECIFICATIONS 61

SECTION CHANGE LOG

	DESCRIPTION	DATE
1		
2		
3		
4		
5		
6		

1. TORQUE TABLES

1.1 ALTERNATORS AND SURROUNDING COMPONENTS

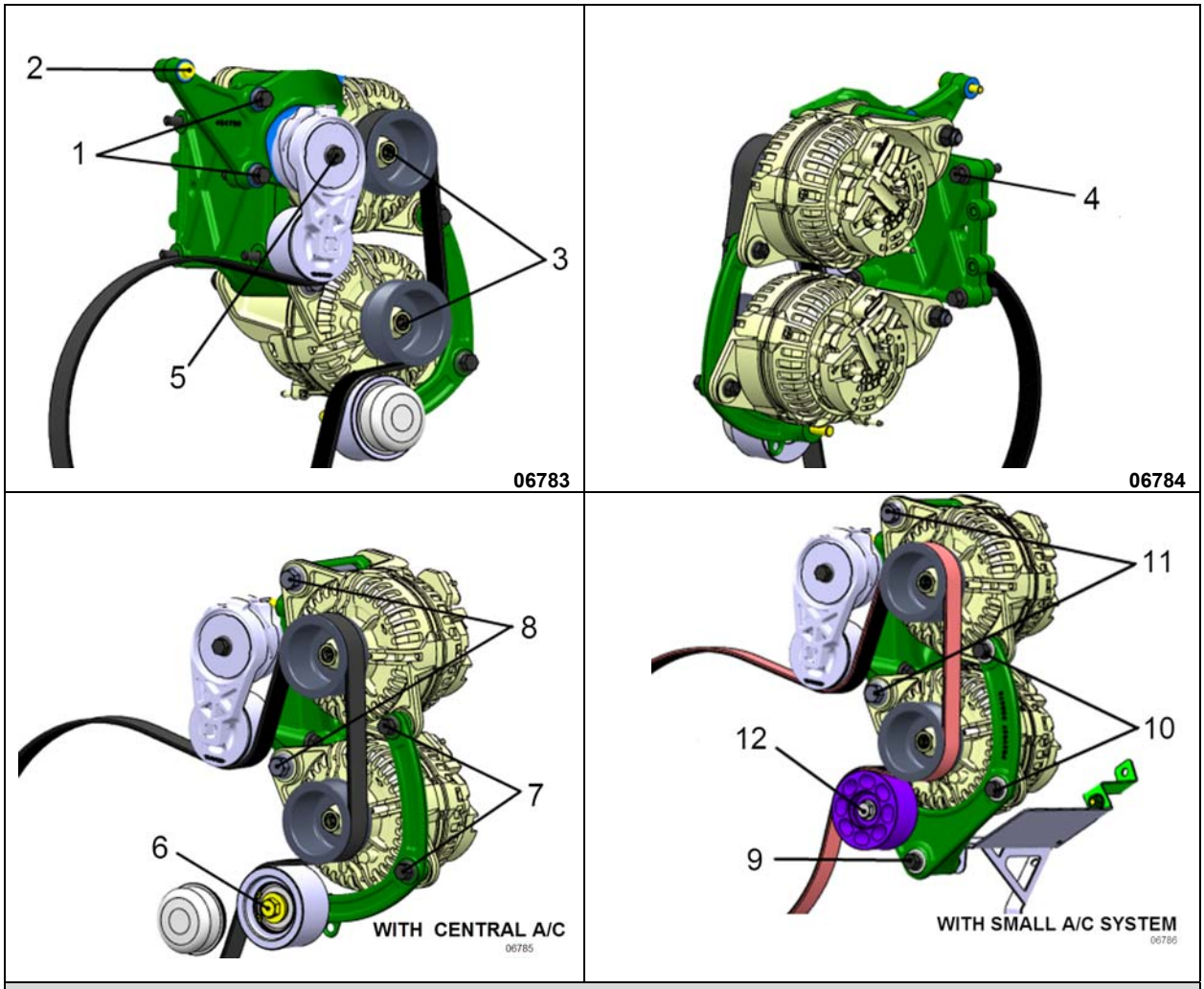

BOSCH HD10 ALTERNATORS		
No	DESCRIPTION	TORQUE
1	A/C tensioner / idler bracket mounting bolts (2)	43 lb-ft (58 Nm)
2	A/C tensioner / idler bracket mounting bolt (1)	22 lb-ft (30 Nm)
3	Alternator pulley (2) LH threads	70-80 lb-ft (95-108 Nm)
4	Alternator mounting bracket mounting bolts	48 lb-ft (65 Nm)
5	Alternator belt tensioner mounting bolt	48 lb-ft (65 Nm)
6	Alternator belt idler mounting bolt (central A/C config.)	82 lb-ft (111 Nm)
7	Alternator mounting bolts inner (2)	48 lb-ft (65 Nm)
8	Alternator mounting bolts outer (2)	82 lb-ft (111 Nm)

9	Alternator bottom bracket mounting bolt (small A/C system)	48 lb-ft (65 Nm)
10	Alternator mounting bolts (2) (small A/C system)	48 lb-ft (65 Nm)
11	Alternator mounting bolts (2) (small A/C system)	82 lb-ft (111 Nm)
12	Alternator belt idler mounting bolt (small A/C system)	48 lb-ft (65 Nm)

1.2 ELECTRICAL CONNECTIONS AND BATTERIES

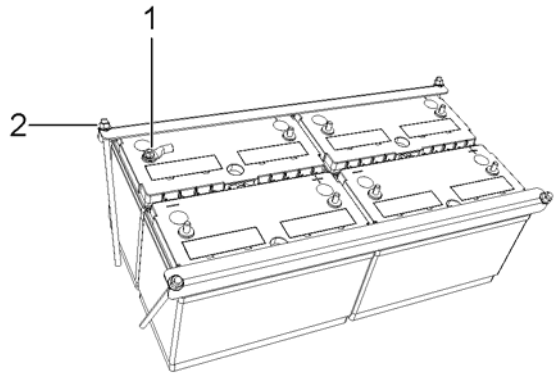

06787

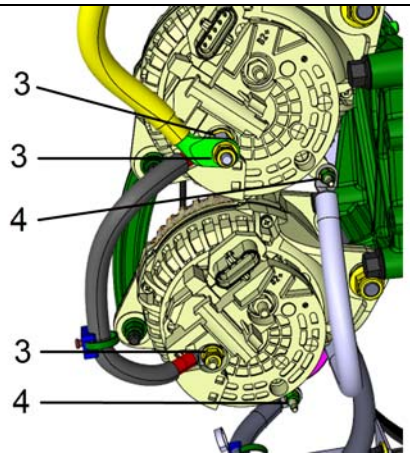

06788

ELECTRICAL CONNECTIONS AND BATTERIES		
No	DESCRIPTION	TORQUE
1	Battery stud connections (8)	13-15 lb-ft (18-20 Nm)
2	Battery tie-down	45-55 lb-in (5-6 Nm)
3	Alternator power connection	11 lb-ft (15 Nm)
4	Alternator ground connection	6 lb-ft (8 Nm)

2. GENERAL DESCRIPTION

These vehicles use a dual voltage system to obtain two different voltages (12 and 24 volts) for various electrical controls and accessories. The main power source incorporates four maintenance-free batteries connected in parallel-series. All batteries are kept uniformly charged by means of a 100 amp battery equalizer (standard), giving a maximum possible output supply of 100 amps on the 12 volt system. Both the 12 and 24 volt systems are controlled through individual main battery relays. Base configuration uses two 28 volt self-regulated alternators, belt driven from the engine, and can be reached through the engine compartment doors.

Vehicles equipped with optional PRIME energy management system are equipped slightly differently and feature AGM batteries and a Vanner Vann-Bus 80 Series battery equalizer.

2.1 WIRING DIAGRAMS

A paper copy of the master wiring diagram of the electric circuits, covering standard and optional accessories and systems, is located in the Technical Publications box. Usually, a separate wiring diagram page is provided for each major function or system. In some cases, more than one circuit may appear on one wiring diagram page; when this occurs, each circuit covered in this page is listed in the wiring diagram index. Moreover, a circuit may appear on several pages; in such case, the number(s) at the extremity of the diagram title will indicate the sheet reference number. Refer to the *"Wiring Diagram Index*" to ensure that the correct diagram is being used to trace the circuit in question. In addition to the major functions page reference, the wiring diagram index contains the following information pages.

- The Multiplexed Device Index,
- The Arrangement-Harness drawing showing the harnesses arrangement and harness number on the vehicle,
- Glossary,
- Circuit number listing,
- Circuit breaker code,
- Connector code,
- Diode number code,
- Resistor number code,
- Fuse code.

2.1.1 Using Wiring Diagrams

Three methods are used to *"work"* with electric wiring diagrams.

Situation: You have identified the defective part (breaker, diode, relay, etc.), and you wish to locate its corresponding circuit.

Problem: Circuit breaker CB12 is released (open circuit) and you don't know which circuit is affected.

a) Refer to wiring diagram index, and look for *"Circuit breaker code"*.

b) At item CB12, you will find the location, the Prevost number, the breaker function, the breaker ampere rating and the page on which to find the corresponding diagram.

c) Refer to page 3.1.

d) When you have located CB12, follow the wiring up to the end and find the diagram page number and function on which the circuit continues.

Situation: You have a problem with a specific system and you want to find the corresponding diagram.

Problem: The last three (3) speakers on the R.H. side of vehicle are inoperative and you must trace the electric circuit.

a) Refer to wiring diagram index and look for *"Sound system".*

b) You will find on page 35.1 & 35.2 the components as well as the electric wiring, thus providing you with a complete understanding of this circuit.

Situation: Using the Driver's Info Display (DID), you check on arrival if there are active errors in the vehicle electrical system. With the SYSTEM DIAGNOSTIC menu, highlight FAULT DIAGNOSTIC, highlight ELECTRICAL SYSTEM to request a diagnostic of the electrical system and then press the enter key. If applicable, the DID shows the fault messages or fault codes recorded. When more than one fault is recorded, an arrow pointing down appears on the right of

the display. Use the down arrow to see all the fault messages.

Problem: DID displays the fault "Elec. Horn SW61 SW62; shorted to ground" as being active.

a) Refer to wiring diagram index, and look for *"Multiplexed Device Index"*, pages B1-B8.

b) In first column DEVICE ID, look for device SW61, SW62.

c) At device SW61,SW62, find the fault message, the minimum condition to activate, other inputs involved in logic, the multiplex module related to switch 61 and switch 62, the connector and pin number on the module and the page on which to find the corresponding diagram.

d) Once the problem corrected, the DID still shows the fault as being active. You have to leave the FAULT DIAGNOSTIC menu, wait approximately 20 to 30 seconds and then return to FAULT DIAGNOSTIC to request a new diagnostic of the ELECTRICAL SYSTEM from the MCM. The DID should display the fault as being inactive.

2.1.2 Testing Circuits

A careful study of the wiring diagrams should be made to determine the source and flow of current through each circuit. When a circuit is thoroughly understood, a point-to-point check can be made with the aid of the applicable wiring diagrams. Any circuit can be tested for continuity or short circuits with a multimeter or a suitable voltmeter.

All electrical connections must always be kept clean and adequately tight. Loose or corroded connections can result in discharged batteries, difficult starting, dim lights and improper functioning of other electric circuits. Inspect all wiring connections at regular intervals. Make sure knurled nuts on all amphenol-type plugs are securely tightened. Knurled nuts on the plastic amphenol-type connectors will click into a detent when properly tightened. Line connectors, who have the side locking tabs, must have the locks latched in place to ensure a proper electrical connection.

2.2 WIRE SIZES AND COLORS

Each wire in the electrical system has a specific size as designated on the wiring diagram. When replacing a wire, the correct size must be used. Never replace a wire with one of a smaller size. The vehicle electrical system is provided with different voltages. The insulation on each wire is distinctly colored in order to determine visually the wiring voltage and to assist in making connectors. The wires are color coded as follows:

Yellow	Multiplex modules communication CAN-H (twisted with green)
Green	Multiplex modules communication CAN-L (twisted with yellow)
Orange	Connected to multiplex outputs
White	Connected to multiplex inputs
Red	24 volt system
Yellow	12 volt system
Black	grounded wire
Blue	110 V ac system (live)
White	110 V ac system (neutral)
Green	110 V ac system (ground)
Orange	speakers (+) (**Coaches Only)**
Brown	speakers (-) (**Coaches Only)**
Grey	spare wire

NOTE
Wires are identified at each 2-4 inch (5-10 cm) intervals by a printed number.

Each wire on a diagram is patterned to assist in tracing and testing circuits. The wire number identifies the voltage rating, the wire identification number and the basic wire gauge as illustrated in Figure 1.

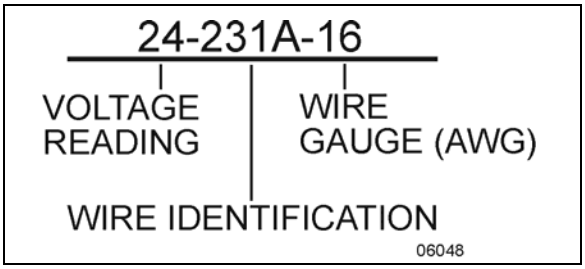

FIGURE 1: WIRE IDENTIFICATION

2.3 SPARE WIRES

When the vehicle leaves the factory, and even in the case of a fully-equipped vehicle, an important number of unconnected spare wires are routed between the junction boxes. Consequently, for any connection of an additional accessory, refer to page D *"Spare wires"* in master

wiring diagram to determine the number, the gauge and location of these wires.

CAUTION

Wire size is calibrated according to the breaker or fuse that protects it. When using a spare wire to replace a damaged wire, assure that the spare wire size is equal or larger than the wire being replaced. Using a wire too small for the breaker or fuse amperage might cause overheating of the wire.

NOTE

Spare wires are identified by a wire identification number and by the letters "SP", to designate "spare".

2.4 CIRCUIT BREAKERS

Most electric circuits are protected by circuit breakers of the "Manual Reset" type. The main circuit breakers, as well as those protecting the A/C system, are located on the rear electrical junction panel and are accessible from the engine compartment curb-side door, on R.H. side of the vehicle.

This type of circuit breaker de-energizes the circuit without disconnecting any wire.

Some circuit breakers such as CB2, CB4 & CB6 are different in the fact that you may open the circuit manually, to do so simply press down the red tab on breaker to open the circuit, repair defective circuit, and afterwards depress black button in center of breaker to close the circuit.

2.4.1 H3 coaches

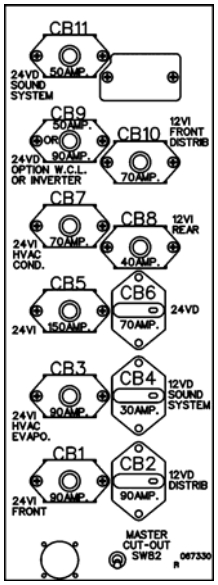

Coaches

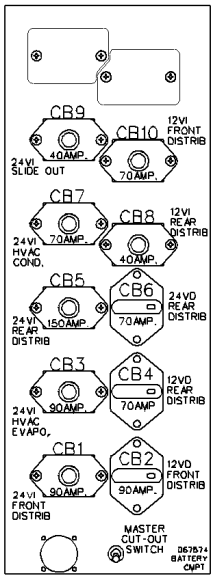

VIP

FIGURE 2: MAIN BREAKER PANELS

Smaller circuit breakers may be located in the VECF of the front service compartment.

CIRCUIT BREAKERS (H3 series coaches)			
CB1	Front distribution	24 VI	90 amps
CB2	Distribution	12 VD	90 amps
CB3	HVAC - evaporator	24 VI	90 amps
CB4	Sound system	12 VD	30 amps
CB5	Rear distribution	24 VI	150 amps
CB6	Distribution	24 VD	70 amps
CB7	HVAC - condenser	24 VI	70 amps
CB8	Rear distribution	12 VI	40 amps
CB9	WCL or other options	24VD	50 amps
CB10	Front distribution	12 VI	70 amps
CB11	Sound system	24 VD	50 amps
CB13	Galley		50 amps
CB14	Galley		90 amps
CB82	Wipers		20 amps
CBOP1	Driver seat		40 amps
CBOP1	Driver seat		40 amps

VD= volts direct. The electrical components connected to these circuit breakers are direct-connected to the battery.

VI= volts indirect. Electrical power is supplied via master relay R1 which engages when ignition key is in the ON or ACC position and battery master switch is set to ON.

2.4.2 H3-45 VIP

Smaller circuit breakers may be located in the VECF of the front service compartment.

CIRCUIT BREAKERS (H3 VIP)			
CB1	Front distribution	24 VI	90 amps
CB2	Front distribution	12 VD	90 amps
CB3	HVAC - evaporator	24 VI	90 amps
CB4	Rear distribution	12 VD	70 amps
CB5	Rear distribution	24 VI	150 amps
CB6	Rear Distribution	24 VD	70 amps
CB7	HVAC - condenser	24 VI	70 amps
CB8	Rear distribution	12 VI	40 amps
CB9	Slide-out	24VI	40 amps
CB10	Front distribution	12 VI	70 amps
CB60	Luggage door lock - VECR		20 amps
CB61	Luggage door lock - VECR		20 amps
CB62	Lower wiper - VECF		20 amps

2.5 MULTIPLEX FUSES

The multiplex outputs are protected in current by an internal “soft-fuse”. Each output has programmed specific maximum amperage. When an output is shorted, the current gets above the limit and the soft-fuse intervenes to turn the output OFF. The output stays OFF until the "soft-fuse" is reset.

Turn the ignition key to the OFF position and turn to the ON position again. This resets all "soft-fuses".

There is also hardware fuses used to protect the incoming power to the multiplex modules. These fuses are located inside the VECF (Vehicle Electrical Center Front) and VECR (Vehicle Electrical Center Rear).

2.6 RELAYS

Relays are used to automatically energize or de-energize a circuit from a remote location. The relay draws a very low current to energize its coil. Once the coil is energized, it develops a magnetic field that pulls a switch arm closed or open, to either energize or de-energize a given component. As the control current required for the coil is very low, the relay allows a remote station to control a high energy circuit without running great lengths of costly high capacity cable, and also eliminates the need for high amperage switches and heavy connectors.

NOTE

Each relay is identified with “12V” or “24V” printed on its casing in order to identify the coil operating voltage.

CAUTION

The Multiplex vehicle uses a VF4 relay specially designed for Volvo that has different internal characteristics than the current VF4 relay. It is important to use only the new part marked Volvo as a replacement in Multiplex vehicles. Regular relays have an inadequate lifespan for Multiplex vehicles.

2.7 PRECAUTIONS

DANGER

Prior to working on a system inside vehicle, make sure to cut electrical power and air supply. A component could be supplied with electricity even if the ignition switch is set to the OFF position and/or a component could be pressurized even if air tanks are emptied. Always refer to the appropriate wiring and pneumatic diagrams prior to working on electrical and/or pneumatic systems.

NOTE

When the ignition switch is set to the OFF position, the electrical components are not energized except for the MCM (Chassis Electronic Control Module), engine MCM, transmission ECU, instrument cluster module, the battery equalizer, the preheater system, the wheelchair lift system and some Multiplex modules which are energized during 15 minutes after the ignition has been set to the OFF position. Prior to working on one of these

electrical components, set the master cut-out switch located above the rear electrical panel to the OFF position.

If the vehicle will not be operated for a long period (more than 2 weeks), it is recommended, in order to prevent the batteries from discharging, to trip main circuit breakers (2, 4 and 6) located on the rear junction panel to stop the small current drawn by the radio preset station memory, the MCM memory and the instrument cluster clock. Note that the radio station presets will be erased, same thing for the diagnostic codes history and the instrument cluster clock will have to be reset.

CAUTION

Prior to arc welding on the vehicle, refer to "Multiplex Modules Disconnection Procedure Prior To Welding" in section 00 GENERAL of this manual to avoid serious damage to the vehicle components.

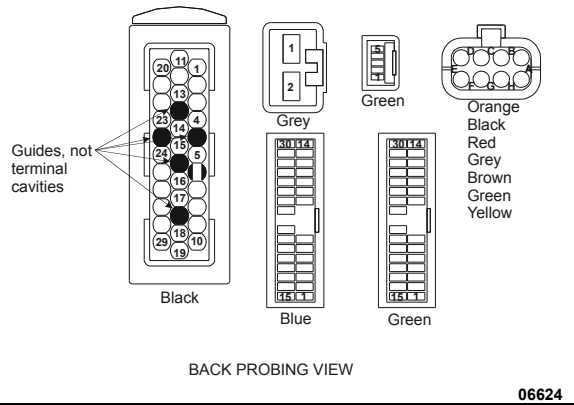

FIGURE 3: MULTIPLEX MODULE CONNECTORS PIN-OUT

Multiplex modules	Connector type	Terminal removal
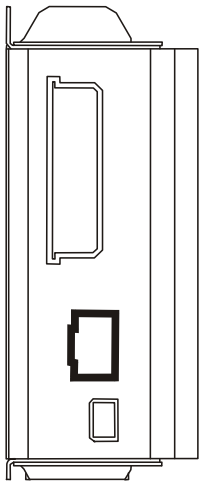 **IO-B** 06625	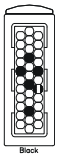 **AMP** 06628	EXTRACTOR/TOOL: Prevost #683594 Insert the extractor on the front of the connector. Remove the terminal by disengaging the flexible lock tabs on the terminal. Gently remove the terminal from the connector by pulling on the wire.
	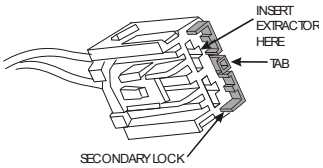 grey 06629 **YAZAKI**	EXTRACTOR/TOOL: Packard #12094430 Using a small flat blade screwdriver, open the hinged secondary lock. Insert the extractor on the front of the connector, over the terminal cavity. Remove the terminal by disengaging the flexible lock tab on the terminal. Gently remove the terminal from the connector by pulling on the wire.
	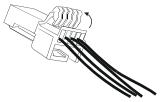 green 06630 **JAE**	EXTRACTOR/TOOL: Prevost #683766 Using a small flat blade screwdriver, open the hinged secondary lock. Insert the extractor on the front of the connector, over the terminal cavity. Remove the terminal by disengaging the flexible lock tab on the terminal. Gently remove the terminal from the connector by pulling on the wire.
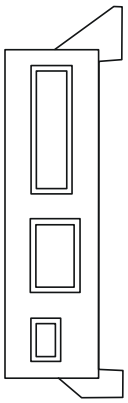 **IO-A** 06626	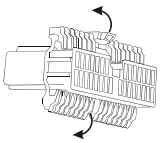 green, blue (MCM) **JAE** 06631	EXTRACTOR/TOOL: Prevost #683766 Using a small flat blade screwdriver, open both hinged secondary locks. Insert the extractor on the front of the connector, over the terminal cavity. Remove the terminal by disengaging the flexible lock tab on the terminal. Gently remove the terminal from the connector by pulling on the wire.
	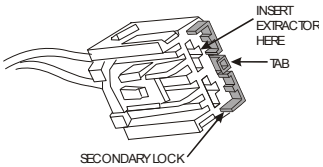 grey 06629 **YAZAKI**	EXTRACTOR/TOOL: Packard #12094430 Using a small flat blade screwdriver, open the hinged secondary lock. Insert the extractor on the front of the connector, over the terminal cavity. Remove the terminal by disengaging the flexible lock tab on the terminal. Gently remove the terminal from the connector by pulling on the wire.
	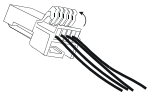 green 06630 **JAE**	EXTRACTOR/TOOL: Prevost #683766 Using a small flat blade screwdriver, open the hinged secondary lock. Insert the extractor on the front of the connector, over the terminal cavity. Remove the terminal by disengaging the flexible lock tab on the terminal. Gently remove the terminal from the connector by pulling on the wire.
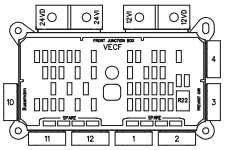 **VECF** 06627	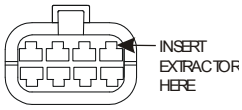 Orange Black Red Grey Brown Green Yellow 06632 **BUSSMAN**	EXTRACTOR/TOOL: Prevost #682256 (Packard 12094429) Remove the terminal by disengaging the flexible lock tab on the terminal. Gently remove the terminal from the connector by pulling on the wire.

3. ELECTRICAL COMPARTMENTS

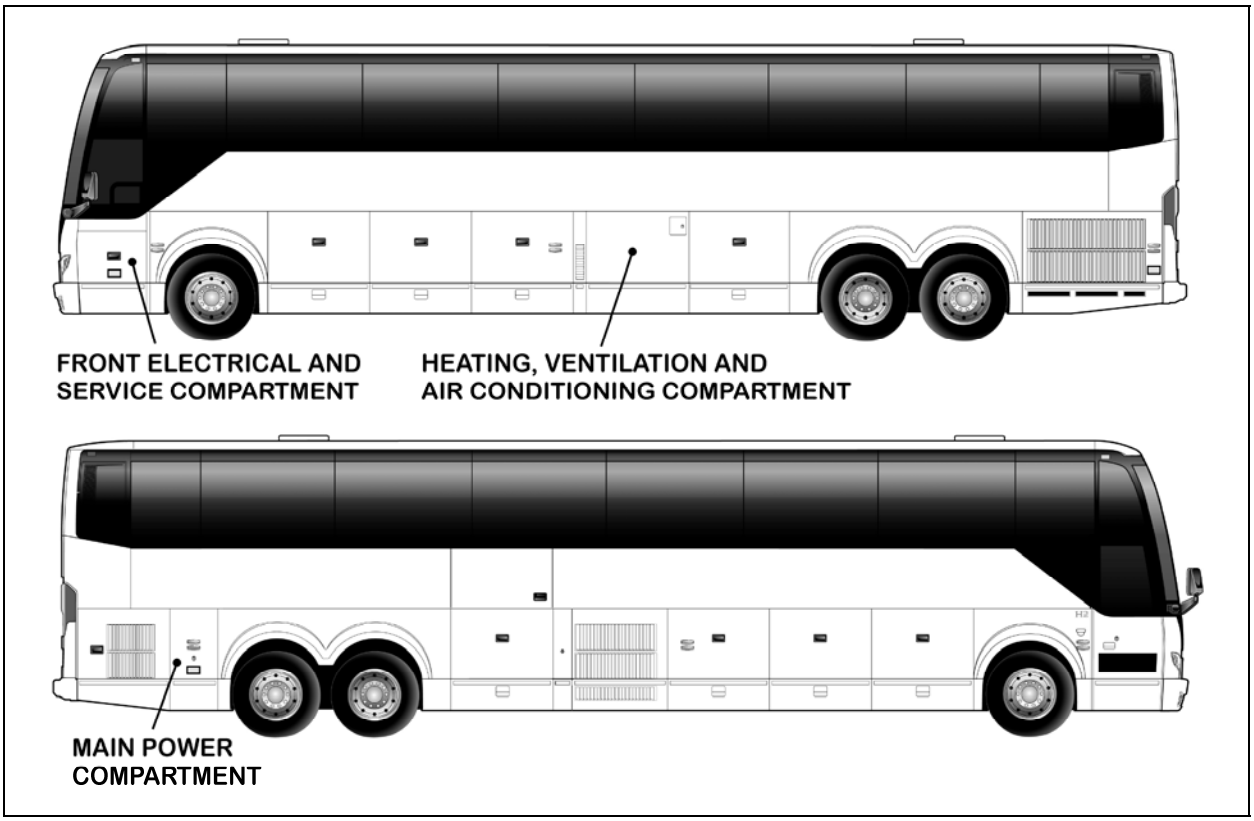

FIGURE 4: ELECTRICAL COMPARTMENTS

3.1 MAINTENANCE

A corrosion inhibitor has been sprayed on certain electrical components in order to protect them from corrosion. Refer to procedure SAV00002E at the end of this section for recommended products and where they are used.

DANGER

Use sprayed sealer in a well ventilated area. Do not smoke. Avoid prolonged contact with skin and breathing of spray mist.

CAUTION

Never put grease or other product on the multiplex modules connector terminals.

3.2 MAIN POWER COMPARTMENT

The main power compartment is located on rear R.H. side of vehicle behind the rear wheelhousing. This compartment contains the following components (Figure 5 & Figure 6):

- Four 12-volt batteries;
- Main circuit breakers for 12-volt and 24-volt electrical system;
- Voltage regulator (if applicable);Battery equalizer;
- Battery Charger (optional);
- Battery master relay (R1) & battery master switch;
- TCM (Transmission Control Module);
- Secondary circuit breakers;
- Relays;
- Rear fuse box known as VECR (Vehicle Electrical Center Rear);
- Multiplex modules: I/O-A, I/O-B;
- OBD13 connector C464A (On-Board Diagnostic);
- Electronic ground stud.

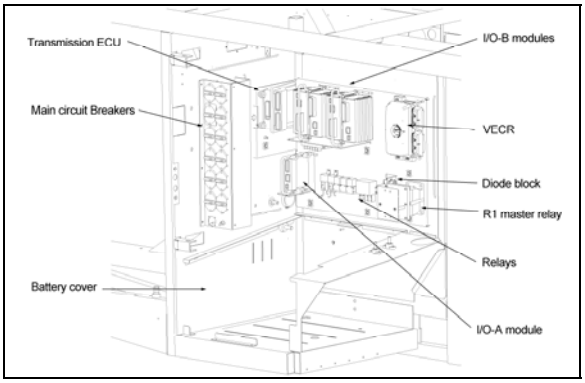

FIGURE 5: MAIN POWER COMPARTMENT (PARTIAL VIEW)

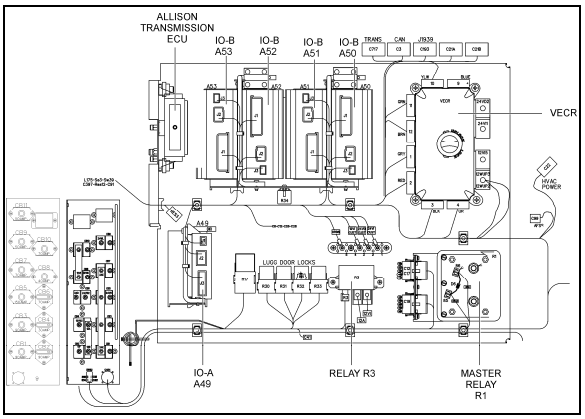

FIGURE 6 : MAIN POWER COMPARTMENT

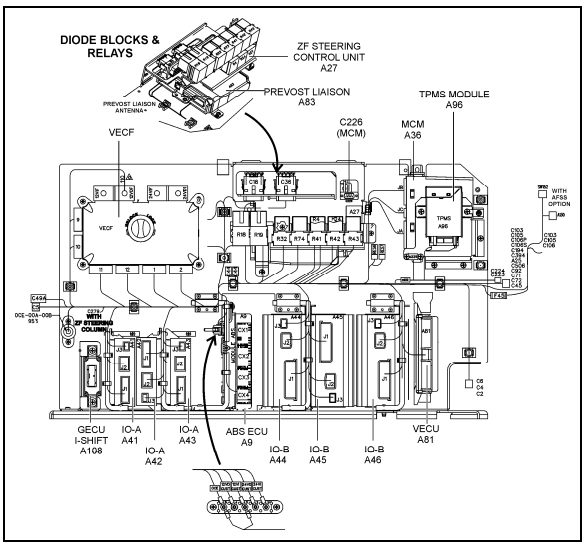

FIGURE 7: FRONT ELECTRICAL AND SERVICE COMPARTMENT

3.2.1 Battery Charger Or In-Station Lighting Connector

The vehicle may be equipped with a battery charger or in-station lighting connector. When it is connected to an external 110-120 VAC power source, the in-station lighting circuit can be energized without depleting the batteries. The receptacle is usually located on the main power compartment door or engine compartment R.H. side door.

3.3 FRONT ELECTRICAL AND SERVICE COMPARTMENT

The front electrical and service compartment is located on front L.H. side of vehicle. It contains the front junction panel with the following components.

- Resistors;
- ABS module;
- Fuses;
- Relays;
- Kneeling audible alarm;
- Front multiplex modules;
- Front fuse box known as VECF (Vehicle Electrical Center Front);
- Emergency door opening unlock valve (coaches only);
- Windshield washer reservoir;
- Reclining bumper opening handle;
- Accessories air tank purge valve;
- Accessories system fill valve;
- Spare wheel support and rail (coaches only);
- Keyless entry system module (VIP only).

3.4 ENGINE REAR START PANEL

This control panel is located in the R.H. side of engine compartment near the engine oil reserve tank. This control panel includes the engine starter selector switch, as well as the rear start push button switch to start engine from engine compartment.

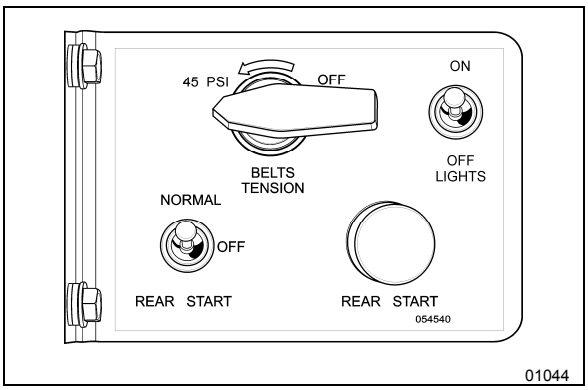

FIGURE 8: ENGINE REAR START PANEL

3.5 A/C AND HEATING CONTROLS

The following components are located in the main power compartment (Figure 5).

The following components are located in the front electrical and service compartment.

The following components are located in the Evaporator Compartment (HVAC). They are mounted on a panel located on the R.H. side wall when facing the compartment (**FIGURE 9**).

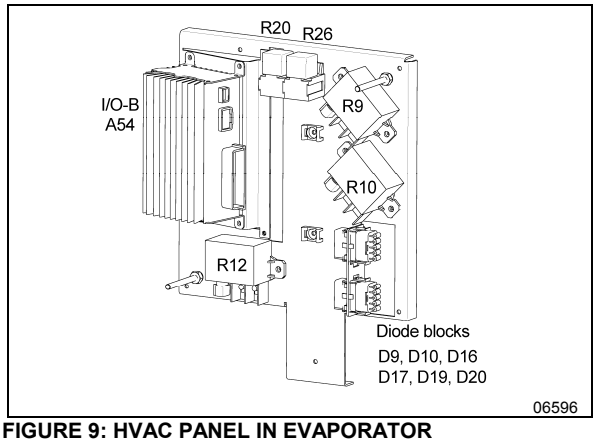

FIGURE 9: HVAC PANEL IN EVAPORATOR COMPARTMENT

Each relay or resistor is identified to facilitate its location.

NOTE
It is important when checking the A/C and heating system to keep the condenser compartment door closed in order to avoid faulty readings.

3.6 PNEUMATIC ACCESSORY PANEL

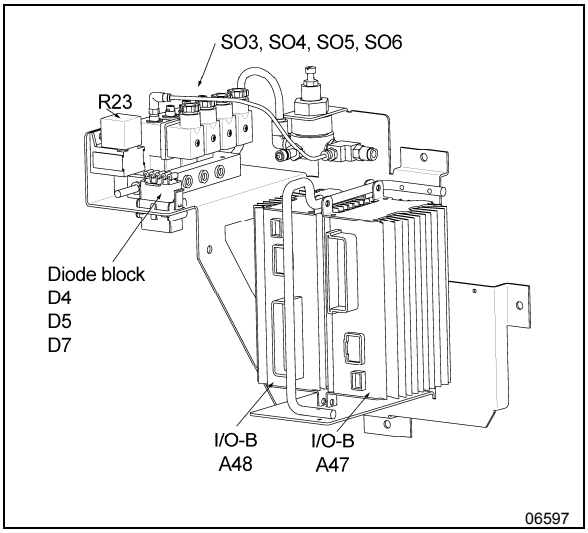

FIGURE 10 : PNEUMATIC ACCESSORY PANEL

To access the pneumatic accessory panel of the right console, remove the panel under the larger utility compartment at the right of the dashboard.

4. BATTERIES

The battery has four (4) major functions:

1. Providing a source of current for starting the engine.
2. Stabilizing the voltage in the electrical system.
3. Supplying current for a limited time, when electrical demands of the equipment exceed the power output of the alternator.
4. Providing a limited source of power for connected accessories, when the engine is not running.

Two types of batteries are available.

- Standard acid-lead Group 31 maintenance free batteries
- AGM Spill proof batteries provided with optional PRIME energy management system.

WARNING

Battery posts, terminals and other related accessories contain lead and lead compounds, chemical known to the State of California to cause cancer and other reproductive harm.

Batteries also contain other chemicals known to the State of California to cause cancer.

Wash hands after handling.

4.1 GROUP 31 MAINTENANCE FREE BATTERIES

The vehicle is provided with four (4) maintenance-free 12 volt heavy-duty batteries connected in series-parallel (**FIGURE 11**)

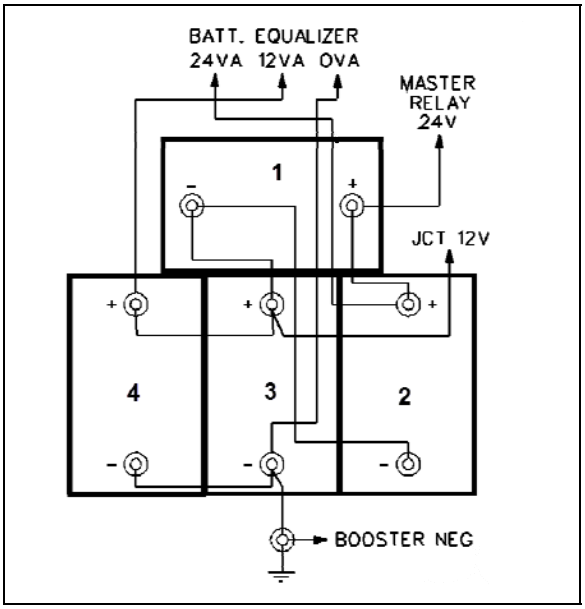

FIGURE 11 : H3 SERIES BATTERY CONNECTIONS (STANDARD ACID-LEAD GROUP 31)

The top-mounted negative and positive terminals are tightly sealed to prevent leaks. Water never needs to be added to this type of battery. There are no filler caps in the cover. The battery is sealed, except for small vent holes in the cover. The vents must not be restricted as they allow small amounts of gases produced in the battery to escape. The special chemical composition inside the battery reduces gassing to a very small amount at normal charging voltages. Besides reducing gassing, the special chemistry greatly reduces the possibility of overcharge damage.

The vents require keeping the battery in an upright position to prevent electrolyte leakage. Tipping the battery beyond a 45° angle in any direction can allow a small amount of electrolyte to leak out of the vent holes.

DANGER

All lead-acid batteries generate hydrogen gas, which is highly flammable. If ignited by a spark or flame, the gas may explode violently, causing spraying of acid, fragmentation of the battery, which may result in severe personal injuries. Wear safety glasses and do not smoke when working near batteries. In case of contact with acid, flush immediately with water.

WARNING

DO NOT tip battery by more than 45° when carrying or installing the battery.

NOTE

Evidence of electrolyte leakage does not necessarily mean the battery is defective.

4.2 GROUP 31 AGM BATTERIES

If your vehicle is equipped with PRIME energy management system, it is provided with four (4) Absorbed Glass Mat (AGM) 12-volt batteries connected in series-parallel (**FIGURE 12**).

These batteries require no maintenance for their lifetime. They can withstand deeper discharge cycles and several times the charging cycles of a standard battery.

These are sealed, valve regulated recombinant batteries which means that the oxygen created will recombine with the hydrogen in the battery, creating water and preventing water loss. Water never needs to be added to this type of battery.

The top-mounted negative and positive terminals are tightly sealed to prevent leaks.

The electrolyte in this type of battery is absorbed in micro-porous glass separators. This design prevents spills and results in greater resistance to vibration.

Always replace these batteries with identical make and model batteries as the system is balanced and optimized for this type of battery.

CAUTION

Replace only with AGM type batteries of the same specification and capacity.

PRIME system is programmed for the charging capacity of the batteries installed.

Installing a higher capacity battery will affect the battery life as the system will not fully charge the batteries, which is detrimental to battery performance.

Refer to “Specifications” at the end of this section for further details.

AGM batteries should be replaced in pairs or four at a time.

CAUTION

AGM (Absorbed Glass Mat) batteries require a voltage-limited charger, ideally fitted with a battery temperature sensor for temperature correction of charging parameters.

Charge voltage: 13.8-14.6 Volt @77°F (25°C)

Float voltage: 13.4-13.6 Volt @77°F (25°C)

Charging AGM battery on a typical constant current or taper current charger – even one time – may greatly shorten its life.

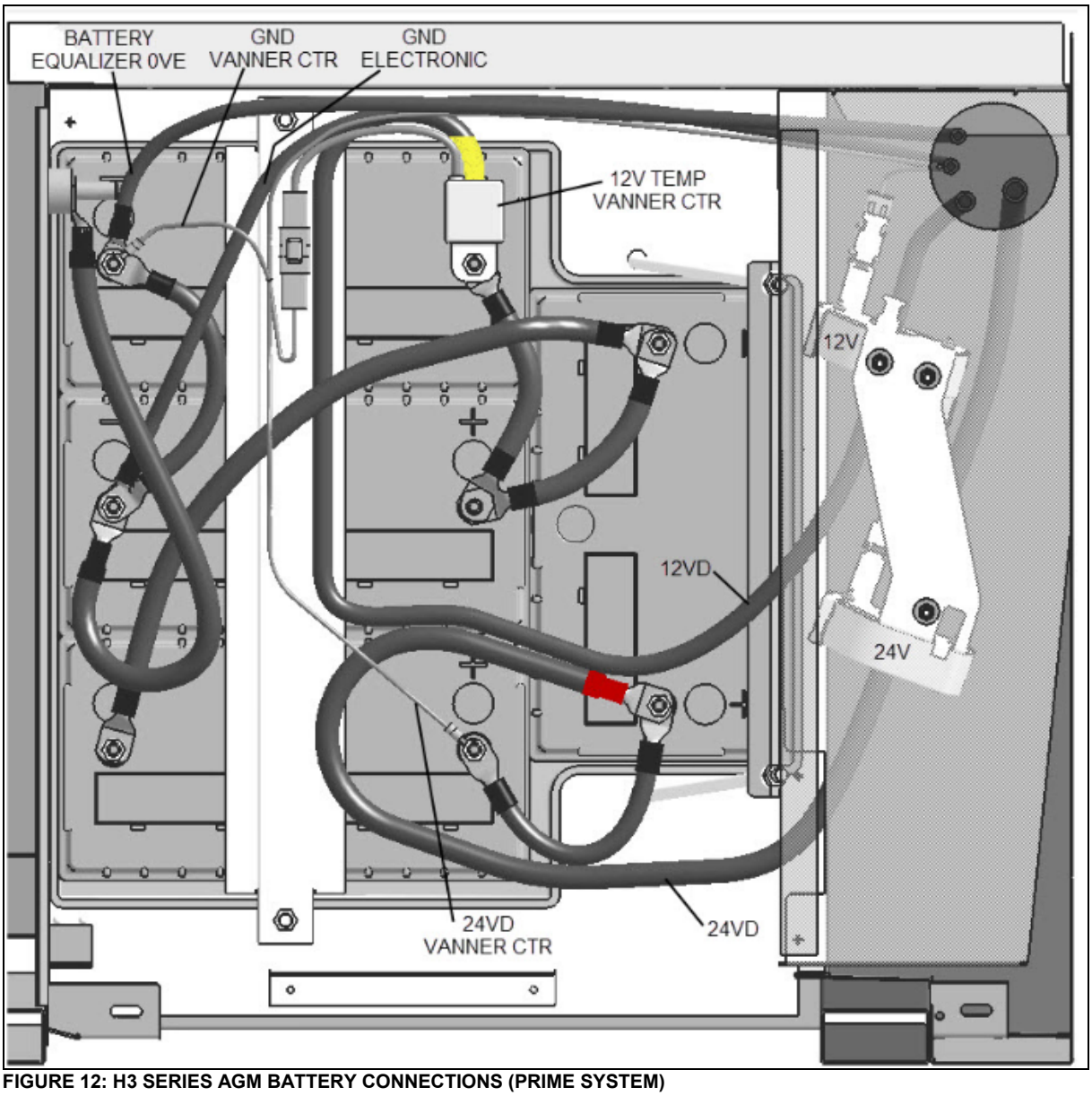

FIGURE 12: H3 SERIES AGM BATTERY CONNECTIONS (PRIME SYSTEM)

4.3 BATTERY DISCHARGE PROTECTION

To prevent discharge of the batteries when the engine in not running, some functions are automatically switched off if the batteries voltage drops below 24.4 volts for more than 30 seconds. The "Battery Voltage Warning" pictogram will show on the DID. Set the ignition key to the OFF position and then turn the ignition key to the ON position to reactivate the functions for a period of 30 seconds before they switch off again.

If a prolonged use of the functions with the engine not running is necessary, connect the battery to a charger.

4.4 MAIN BATTERY RELAYS

Main battery (master) relays (12V and 24V) are provided for this vehicle. The relays are located in the battery compartment and on the rear electrical panel. The 24-volt battery relay (R1) engages when ignition key is in the ON or ACC position and battery master switch (master cut-out) is flipped ON.

When the main battery relays (R1 & R3) are turned to the *OFF* position, all electrical supply from the batteries is cut off, with the exception of the following items.

- Battery equalizer check module;
- MCM;
- ECM;
- TCM (World transmission);
- Preheater electronic timer;
- Preheater and water recirculating pump;
- Entrance door;
- Radio memory;
- Cluster memory.

4.5 BATTERY REMOVAL AND INSTALLATION

The batteries are located in the battery compartment on the R.H. side of the engine compartment and are accessible from the engine compartment curb-side door.

1. Remove the battery compartment protective cover.

DANGER

To prevent possible electric shocks or sparking, the battery master switches should be in the "Off" position before disconnecting cables from the batteries.

2. Remove the supports, and unscrew terminal nuts of each defective battery.
3. Remove battery cables from the batteries.
4. Remove batteries.
5. Installation is the reverse of removal. Connect the red (24-volt) battery cables first, then the yellow (12-volt) battery cables and finish with the black (ground) cables.

NOTE

When the battery cables have been removed from the batteries, wrap the battery terminals and cable ends with electric tape to prevent accidental grounding. The ground cables should always be disconnected first and replaced last.

CAUTION

Ensure that connections are not reversed when reinstalling batteries, since damage to electrical system components will result.

NOTE

When reinstalling batteries, battery connections must be tightened. A torque wrench is required to ensure an accurate tightening torque.

TORQUE: 13-15 lb-ft (18-20 Nm)

DANGER

To prevent possible electric shock or sparking, the battery master switch must be set to the “Off” position before tightening an electrical connection.

NOTE
A protective coating should be applied on certain power connections that have been disconnected. Refer to Procedure PR00002E included at the end of this section to know the recommended products and where they are used.

4.6 BATTERY RATING

Each of the 12 volt batteries used on the vehicle has the following rating:

Standard Low Maintenance batteries:

- Reserve capacity: 195 minutes
- Cold cranking (amps): 950 @ 0°F (-18°C)
- Cold cranking (amps): 745 @ -20°F (-29°C)
- Weight (filled): 59 lb (26,7 kg)

AGM batteries (PRIME):

- Reserve capacity: 200 minutes
- Cold cranking (amps): 800 @ 0°F (-18°C)
- Weight (filled): 69 lb (26,7 kg)

The reserve capacity is defined as the number of minutes a new, fully charged battery at 80°F (26,6°C) can be discharged at 25 amperes and maintain a minimum of 1.75 volts per cell (10.5 volts total for one 12 volts battery). This rating can be used as a basis for determining how long a vehicle might run after an alternator failure.

The cold cranking rating is defined as the minimum discharge current a battery will deliver in amperes for 30 seconds at 0°F (-18°C) while maintaining a minimum of 1.2 volts per cell (7.2 volts total for one 12 volts battery). This rating can be used as a basis for comparing starting performance.

4.7 BATTERY TESTING

Several factors influence battery performance. The methods and inspection procedures proposed here will ensure your batteries are in good shape.

4.7.1 Visual Inspection

1. Check the outside of the battery for a broken or cracked cover or case that could permit loss of electrolyte. If obvious physical damage is noted, replace the battery. Also check for wet areas around the terminals.
2. Check for loose terminal posts, cable connections, damaged cables, and for evidence of corrosion. Correct conditions as required before proceeding with tests.
3. Check for damaged or loose battery tie-downs.

4.7.2 Removing Surface Charge

Disconnect cables from the battery and attach alligator clamps to the contact lead pad on the battery as shown in figure 20. Connect a load equal to half the CCA across the terminal for 5 seconds to remove surface charge from the battery.

4.7.3 Load Test

This test is one means of checking the battery to determine its ability to function as required in the vehicle.
To make this test, use test equipment that will withstand a heavy electrical load from the battery, such as a carbon pile resistor along with an ammeter and volt meter (fig 19). A charging system analyzer test equipment may also be used.

1. Connect a voltmeter, ammeter, and a variable load resistance as illustrated in Figure 13.

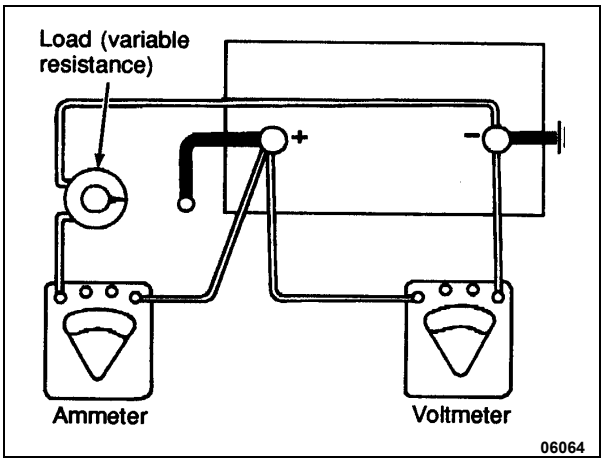

FIGURE 13: LOAD TEST

CAUTION

Observe polarity of the meters and the battery when making connections, and select the correct meter range.

2. Apply a load equal to half the CCA rating @ 0°F for 15 seconds.
3. With an ammeter reading specified load, read voltage. The voltage should be at least 9.6 volts. Disconnect the load. If the voltmeter indicates 9.6 volts or more, the battery is good. If the voltmeter reading is less than 9.6 volts, replace the battery. This voltage is to be used for battery ambient temperatures of 70ºF (21ºC) and above. For temperatures below 70ºF (21ºC), refer to the following *"Voltage and Temperature Chart"*.

Voltage and Temperature Chart

Ambient Temperature	Minimum Voltage
70ºF (21ºC) and above	9.6
60ºF (16ºC)	9.5
50ºF (10ºC)	9.4
40ºF (4ºC)	9.3
30ºF (-1ºC)	9.1
20ºF (-7ºC)	8.9
10ºF (-12ºC)	8.7
0ºF (-18ºC)	8.5

NOTE

The accuracy of this test procedure is dependent upon close adherence to the proper load, time and temperature specifications.

4.7.4 Testing Battery Cables

Check all cable ring terminals and connections to determine if they are in good condition. Excessive resistance, generally caused by poor connections, produces an abnormal voltage drop which may lower voltage at the starter to such a low value that normal operation of the starter will not be obtained. An abnormal voltage drop can be detected with a low-reading voltmeter as follows:

DANGER

To prevent the engine from starting during these tests, remove fuses F78 and F79 located in the VECR of the rear electrical compartment. Once the tests are completed, reinstall F78 and F79.

1. Check voltage drop between grounded (negative) battery terminal and vehicle frame by placing one prod of the voltmeter on the battery terminal and the other on a good ground (unpainted surface) on the vehicle. With the starter cranking the engine at a temperature of 70ºF (21ºC), voltage reading should be less than 0.3 volt. If the voltage reading exceeds 0.3 volt, there is excessive resistance in this circuit.
2. Check voltage drop between the positive battery terminal and the starter positive terminal stud while the motor is operated. If the reading is more than 2.5 volts, there is excessive resistance in this circuit.

NOTE

If it is necessary to extend the voltmeter lead for this test, use a #16 (AWG) or larger wire.

3. Check voltage drop between the starter housing and a good ground on the vehicle. The reading should be less than 0.2 volt.

DANGER

Any procedure other than the following could cause personal injury or damages to the charging system resulting from battery explosion or electrical burns.

Wear adequate eye protection when working on or near the batteries. Ensure that metal tools or jumper cables do not contact the positive battery terminal (or a metal surface in contact with it) as a short circuit will result. Do not attempt to jump start a vehicle suspected of having a frozen battery because the battery may rupture or explode. Both the booster and discharged batteries must be treated carefully when using jumper cables. Follow exactly the procedure outlined later in this section, being careful not to cause sparks.

4.8 BATTERY CHARGING

The batteries used on this vehicle can be charged either on or off the vehicle; however, when they are removed from the vehicle, it is recommended that an adapter kit, which is available from any "A/C DELCO" dealer, be used in charging sealed-terminal batteries. Use the booster block to charge the batteries when

they are left on vehicle and **make sure that the main battery disconnect switch is set to the *"On"* position.**

DANGER

During charging of the batteries, an explosive gas mixture forms in each cell. Part of this gas escapes through the vent holes and may form an explosive atmosphere around the battery itself if ventilation is poor. This explosive gas may remain in or around the battery for several hours after it has been charged. Sparks or flames can ignite this gas causing an internal explosion, which may shatter the battery.

1. Do not smoke near a battery which is being charged or which has been recently charged.
2. Do not break live circuits at battery terminals because a spark usually occurs at the point where a live circuit is broken. Care must always be taken when connecting or disconnecting booster leads or cable clamps on chargers. Poor connections are a common cause of electric arcs, which cause explosions.
3. The electrical system on this vehicle is negative ground. Installing the batteries with the positive terminals grounded or incorrect use of the booster battery and jumper cables will result in serious damage to the alternator, batteries and battery cables.

The alligator clamps of the tester or charger must be placed between the terminal nuts and the lead pads of the terminal studs (

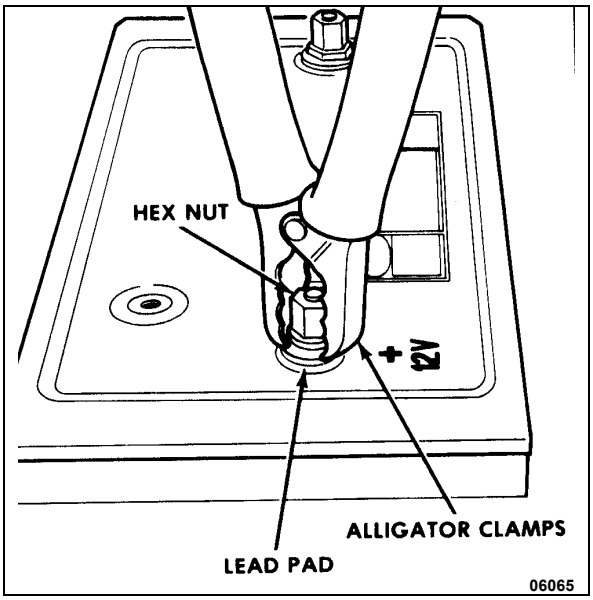

Figure 15) after the vehicle cables are detached. The alligator clamps should make firm contact with the lead pads.

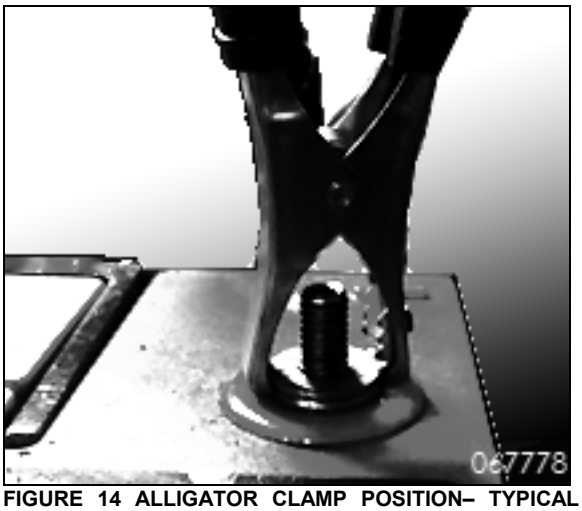

FIGURE 14 ALLIGATOR CLAMP POSITION– TYPICAL AGM BATTERY

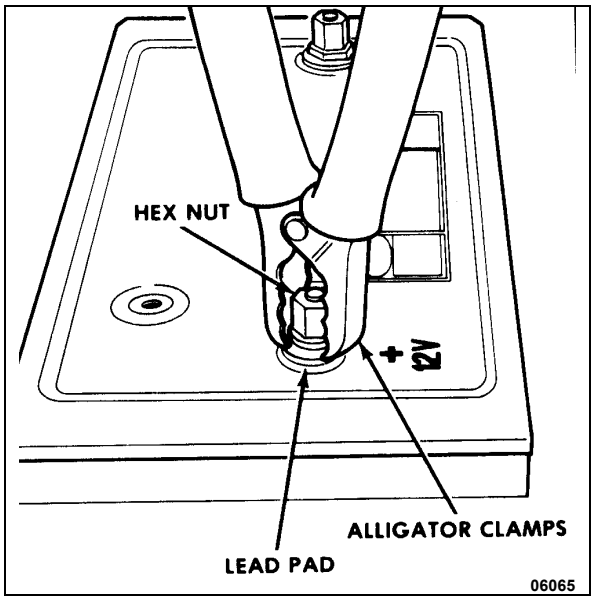

FIGURE 15: ALLIGATOR CLAMP POSITION STANDARD BATTERY

A charge rate between 3 and 50 amperes is generally satisfactory for any maintenance-free flooded battery as long as spewing of electrolyte does not occur or the battery does not feel excessively hot (over 125ºF (52ºC)). If spewing or violent gassing of electrolyte occurs or battery temperature exceeds 125ºF (52ºC), the charging rate must be reduced or temporarily stopped to allow cooling and to avoid damaging the battery. Battery temperature can be estimated by touching or feeling the battery case. No further charging is required. Shake or tilt the battery at hourly intervals during charging to mix the electrolyte.

WARNING

Always turn off the charger before connecting or disconnecting to a battery.

NOTE

The charge rate must be doubled when the batteries are charged by the booster block, because of the series-parallel circuit.

4.8.1 Battery Charging Guide

NOTE

AGM (Absorbed Glass Mat) batteries require a voltage-limited charger, ideally fitted with a battery temperature sensor for temperature correction of charging parameters. *Do not manually charge AGM batteries. Look for the following voltage values on your voltage-limited charger.*

Charge voltage: 13.8-14.6 Volt @77°F (25°C)

Float voltage: 13.4-13.6 Volt @77°F (25°C)

Charging AGM battery on a typical constant current or taper current charger – even one time – may greatly shorten its life.

The following guidelines are for maintenance-free flooded batteries.

Fast Charging Rate

3-3/4 hours @ 20 amps
2-1/2 hours @ 30 amps
2 hours @ 40 amps
1-1/2 hours @ 50 amps

Slow Charging Rate

15 hours @ 5 amps
7-1/2 hours @ 10 amps

The time required for a charge will vary according to the following factors:

Size of Battery

A completely discharged large heavy-duty battery requires more than twice the recharging time of a completely discharged small passenger car battery.

Temperature

A longer time will be needed to charge any battery at 0°F (-18°C) than at 80°F (27°C). When a fast charger is connected to a cold battery, the current accepted by the battery will be very low at first, and then in time, the battery will accept a higher rate as it warms.

State of Charge

For example, a completely discharged battery requires more than twice as much charge than a half-charged battery. Since the electrolyte is nearly pure water and a poor conductor in a completely discharged battery, the current accepted is very low at first. Later, as the charging current causes the electrolyte acid content to increase, the charging current will likewise increase.

Charger Capacity

A charger supplying only 5 amperes will require a much longer period of charging than a charger that can supply 30 amperes or more.

4.8.2 Emergency Jump Starting With Auxiliary (Booster) Battery.

DANGER

Off-board battery charger with a start boost facility must not be used to jump start the vehicle. This could damage the electrical system.

Booster Block

On H3 coaches, the booster block is located in the engine compartment, on the R.H. side and is accessible through engine R.H. side door.

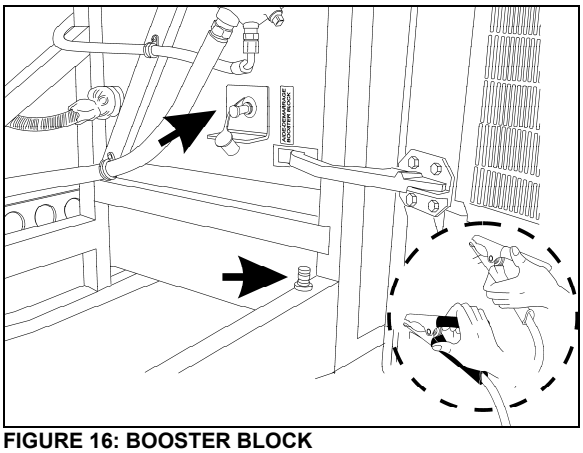

FIGURE 16: BOOSTER BLOCK

Both booster and discharged batteries should be treated carefully when using jumper cables. A vehicle with a discharged battery may be started by using energy from a booster battery or the battery from another vehicle.

DANGER

Jump starting may be dangerous and should be attempted only if the following conditions are met:

The booster battery or the battery in the other vehicle must be of the same voltage as the battery in the vehicle being started, and must be negative grounded.

DANGER

Follow the procedure exactly as outlined hereafter. Avoid making sparks.

Wear eye protection and remove rings, watches with metal bands and other metal jewelry.

Apply parking brake and place the transmission shift lever or push-button pads in Neutral (N) position in both vehicles. Turn off lights, heater and other electrical loads.

The following procedure should be used only when the batteries are discharged.

Do not attempt jump starting if you suspect the batteries are charged. Inspect the engine starting system prior to using this procedure.

1. Connect one end of one red jumper cable to the positive (+) terminal of the booster power source and the other end to the positive (+) post of the booster power block, located on the R.H. side of the engine compartment (**FIGURE 16**).
2. Connect one end of the remaining negative jumper cable (black) to the negative (-) terminal of the booster power source, and the other end of the black jumper cable to the negative (-) post of the booster power block.
3. Make sure the clips from one cable do not inadvertently touch the clips on the other cable. Do not lean over the battery when making connections. The ground connection must provide good electrical conductivity and current carrying capacity.
4. Start the engine in the vehicle that is providing the jump start. Let the engine run for a few minutes, then start the engine in the vehicle that has the discharged batteries.
5. When removing the jumper cables, perform the above procedure exactly in reverse order, and replace protective caps on booster block terminals.

DANGER

Any procedure other than the above could result in personal injury, property damage due to battery explosion, or damage to the charging system of the booster vehicle or of the boosted vehicle.

NOTE

Jumper cables must withstand 500 cranking amperes. If cable length is 20 feet (6m) or less, use 2/0 (AWG) gauge wires. If cable length is between 20-30 feet (6-9m), use 3/0 (AWG) wires.

4.9 AGM BATTERY CHARGING PRECAUTIONS

AGM (Absorbed Glass Mat) batteries require a voltage-limited, temperature corrected charger.

Make sure your charger is multi-staged and minimally provides the following voltage values:

Charge stage voltage:

13.8-14.6 V @77°F (25°C)

Float stage voltage:

13.4-13.6 V @77°F (25°C)

Charging AGM battery on a typical constant current or taper current charger – even one time – may greatly shorten its life.

4.10 BATTERY EQUALIZATION AND AGM BATTERIES

Equalization is a controlled over charge. Conventional batteries may benefit from this procedure, stirring the chemistry of the entire battery it counters stratification (layers of different concentration of electrolyte), and also counters sulfation that may have accumulated on the battery plates.

AGM battery design prevents chemical unbalance of the electrolyte. Manufacturers of this type of battery generally do not recommend performing equalization.

4.11 CLEANING AND INSPECTION

The external condition of the battery and the battery cables should be checked periodically. The top of the battery should be kept clean and the battery hold-down clamp bolts should be kept properly tightened. For best results when cleaning the battery, wash first with a diluted solution of ammonia or soda to neutralize any acid present then wash out with clean water. The battery hold-down bolts should be kept tight enough to prevent the batteries from moving, but they should not be tightened to the point that excessive strain is placed on the battery hold-down cover.

TORQUE: 45-55 lb-in (5-6 Nm).

MAINTENANCE

Battery terminals

Clean and coat terminals with Nyogel at the intervals specified by the Lubrication And Servicing Schedule in Section 24: LUBRICATION & SERVICING.

A protective coating should be applied on certain power connections that have been disconnected. Refer to Procedure PR00002E included at the end of this section to know the recommended products and where they are used.

To insure good contact, the battery cable ring terminals should be tight on the battery posts. If the posts or cable ring terminals are corroded, the cables should be disconnected and the posts and clamps cleaned separately with a soda solution and a wire brush. Install cable ring terminals on battery posts and tighten.

TORQUE: 13-15 lb-ft (18-20 Nm)

Replace protective caps to prevent corrosion and sparks.

4.12 COMMON CAUSES OF BATTERY FAILURE

When a battery fails, the cause of failure may be related to something other than the battery. For this reason, when a battery failure occurs, do not be satisfied with merely recharging or replacing the battery. Locate and correct the cause of the failure to prevent recurrence. Some common external causes of battery failure are as follows:

1. A defect in charging system such as high resistance or a faulty alternator or regulator. The dashboard ALTERNATOR telltale light illuminates if one of the alternators is defective.

ALTERNATOR telltale

2. A malfunction within the 12 volts system (equalizer).

3. Overloads caused by a defective starter or excessive use of accessories.
4. Dirt and electrolyte on top of the batteries causing a constant drain.
5. Hardened battery plates, due to battery being in a low state of charge over a long period of time.
6. Shorted cells, loss of active material from plates.
7. Driving conditions or requirements under which the vehicle is driven for short periods of time.
8. A constant drain caused by a shorted circuit such as an exposed wire or water infiltration in junction boxes causing ground fault.
9. Extended operation of preheating system with engine not running.
10. Failing to close disconnect switches during the night.

4.13 TROUBLESHOOTING

If a battery is known to be good and then has not performed satisfactorily in service for no apparent reason, the following factors may reveal the cause of trouble:

1. Vehicle accessories and disconnect switches inadvertently left on overnight.
2. Defects in the charging system, such as high wiring resistance, faulty alternator, regulator or battery equalizer.
3. A vehicle electrical load exceeding the alternator (or battery equalizer) capacity, with the addition of electrical devices, such as CB radio equipment, a cellular phone or additional lighting systems.
4. Defects in the electrical system, such as shorted or pinched wires.
5. Extended driving at a slow speed while using many accessories.
6. Loose or poor battery cable-to-post connections, previous improper charging of a run-down battery, or loose hold-down clamp bolts.
7. High-resistance connections or defects in the cranking system.

4.14 "BATTERY VOLTAGE WARNING" PICTOGRAM

If the "BATTERY VOLTAGE WARNING" (Low Voltage – Connect Battery Charger) pictogram shows up in the DID (Driver Information Display), check the voltmeter gauge to determine if the battery voltage is too high or too low.

4.14.1 Voltage Gauge Definitions

Voltmeter drops below 24.4 volts dc

- Check alternator output.
- Check voltage regulator.
- Check battery connections.
- Check battery cells.
- Check battery equalizer connections.

Voltmeter exceeds 30 volts dc

- Check alternator output.
- Check voltage regulator.
- Check battery connections.

Checking Battery Balance

NOTE
Allow at least 15 minutes to balance batteries after any corrective measure has been taken.

1. Batteries out of balance (difference greater than 1.5 volts between the two battery banks).
   - Check battery equalizer connections.
   - Check equalizer cables for proper gauge.
   - Check battery connections.
2. Demand for 12-volt power exceeding rated amperage output of battery equalizers causing batteries to go out of balance.
   - Reduce 12-volt load or install additional battery equalizer(s).

4.14.2 BATTERY warning Pictogram MAY appear as a reminder

If you leave *ignition ON, park brake set* and *engine not running*, this warning may

appear after 20 minutes as a reminder to connect the battery charger. The reminder will appear even if the batteries are in the right voltage range.
Confirm battery voltage is indeed correct with the DID Gauges screen and if you do need to leave the ignition ON for a prolonged period, connect a battery charger.

5. PRIME ENERGY MANAGEMENT SYSTEM

5.1 DESCRIPTION

The acronym “PRIME” stands for Power Recovery by Intelligent Management of Energy.

This system focuses on eliminating parasitic loads on the engine by intelligent management of the alternators and air compressor duty cycle.

Instead of constantly charging, the alternators will use engine negative torque (braking, deceleration) to generate “Free” electricity.

Depending on the compressed air requirement, PRIME will also trigger the production of compressed air on negative torque.

PRIME also introduces maintenance-free Absorbed Glass Mat (AGM) batteries and a new Vanner 80 series battery equalizer that monitors battery State of Charge (SOC).

Battery temperature, voltage and current are also monitored to prevent overcharging and overheating.

Maximum fuel economy is obtained on a ride when the mix of hilly and flat portions allows the batteries to be charged when the vehicle is in free wheel. It basically means that batteries are charged with free energy and that no fuel consumption is dedicated to charge the batteries.

5.2 COMPONENTS

New components includes AGM batteries, a Vanner Battery equalizer, a temperature sensor located on the battery post and two voltage and current sensors monitoring 12V and 24 V circuits.

Refer to Figure 17 below.

The compressor duty cycle control is achieved by an electric air dryer. This is covered in section 12 of this manual.

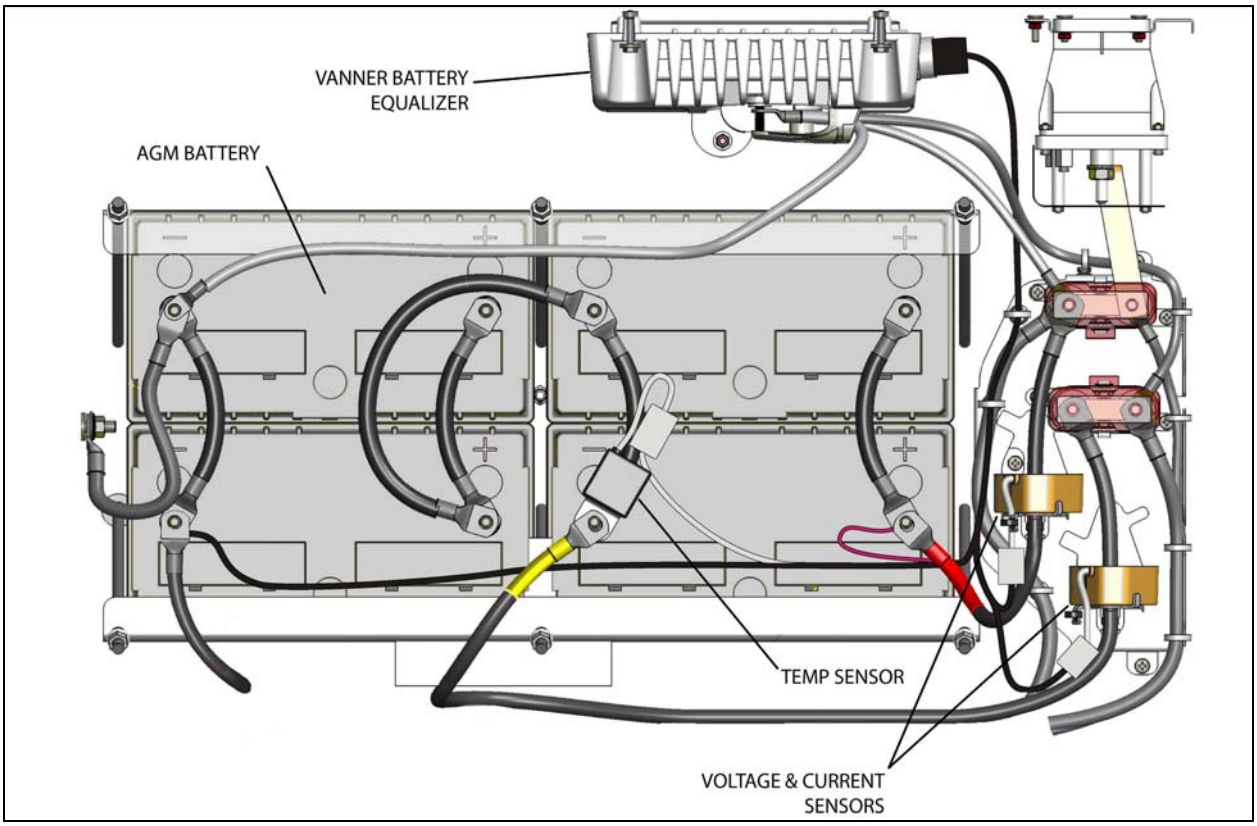

FIGURE 17: PRIME ELECTRICAL COMPONENT

5.2.1 Vanner 80 Series Battery Equalizer Fault Codes

The 80 Equalizer Can Bus Interface supports SAE J1939 Diagnostic Message 1 (DM1) for active Diagnostic Trouble Codes. See list below. Refer to OEM publication *Vanner Vann-Guard 80 Series Owner's Manual* PDF for additional details.

Description	SPN	FMI
Over Voltage Fault (OVF)	168	0: Data valid, but above normal operating range – Most Severe
Under Voltage Fault (UVF)	168	1: Data valid, but below normal operating range – Most Severe
Imbalance (IMB)	520448	0: Data valid, but above normal operating range – Most Severe
Equalizer Fault (EQFLT)	520449	1: Data valid, but below normal operating range – Most Severe
Temperature Sensor Fault (TSF)	520450	0: Data valid, but above normal operating range
Temperature Sensor Fault (TSF)	520450	1: Data valid, but below normal operating range
Temperature Sensor Fault (TSF)	520450	2: Data erratic, intermittent, or incorrect – Most Severe
12V Current Sensor Fault (SCSF)	520451	0: Data valid, but above normal operating range – Most Severe
12V Current Sensor Fault (SCSF)	520451	1: Data valid, but below normal operating range
12V Current Sensor Fault (SCSF)	520451	2: Data erratic, intermittent, or incorrect – Most Severe
24V Current Sensor Fault (DCSF)	520452	0: Data valid, but above normal operating range – Most Severe
24V Current Sensor Fault (DCSF)	520452	1: Data valid, but below normal operating range
24V Current Sensor Fault (DCSF)	520452	2: Data erratic, intermittent, or incorrect – Most Severe

5.3 DID DISPLAY

In the DID you will find the percentage of trip made with regenerated electricity displayed along with the instantaneous fuel consumption.

This value is reset each time the engine is restarted.

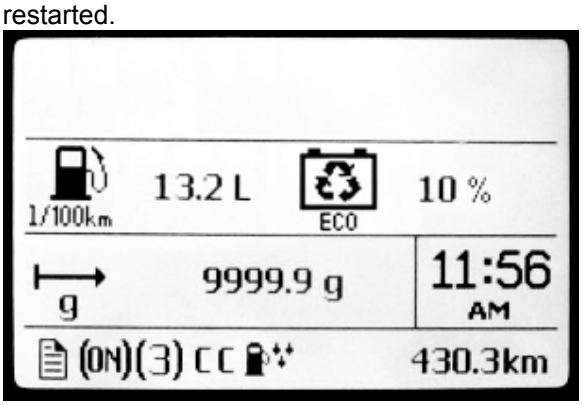

FIGURE 18: PRIME DID DISPLAY

In addition to the standard voltage gage, the DID also includes a state of charge gage for the batteries:

FIGURE 19: BATTERY STATE OF CHARGE

This gage displays the level of charge for the 12V and 24V battery banks in percentage.

6. TROUBLESHOOTING AND TESTING THE MULTIPLEX VEHICLES

6.1 PROBING VOLTAGE ON THE MULTIPLEX CIRCUITS

Some Multiplex modules are supplied by 12 volts while others are supplied by 24 volts. The 12-volt or 24-volt information is found on the modules symbol in the wiring diagram. Before taking voltage readings to track the source of a problem, first verify if the module is supplied by 12V or 24V, if not, residual voltage on the module inputs/outputs can draw an erroneous conclusion.

Inactive Multiplex output = Residual voltage of 18% to 33% of supply voltage.

Inactive Multiplex input = Residual voltage of 50% of supply voltage.

NOTE
o *Verify on the wiring diagram whether the voltage is 12V or 24V,*
o *For a 12V module: an active voltage would be 12V or 0V but not in between. If you measure the intermediate tensions (ex. 6V, 2V, or 4V) this must be interpreted as if the input or the output is inactive.*
o *For a 24V module: an active voltage would be 24V or 0V but not in between. If you measure the intermediate tensions (ex. 12V, 4V, or 8V) this must be interpreted as if the input or the output is inactive.*

6.2 CAN NETWORK

The CAN network wiring is separated in sections and uses connectors that are not shared with other circuits. This allows sections of the network to be isolated to help locate short-circuit on the CAN.

In case of a short-circuit on the CAN network, this affects all the modules and they all act as “No response” in the error messages of the “ELECTRICAL SYSTEM” menu. To locate a short-circuit, proceed by disconnecting one module zone at a time while verifying if this makes inactive the errors in the modules still connected. Connector C1 (front electrical & service compartment) disconnects all the modules at the rear of the vehicle from the network. Connector C5 (front electrical & service compartment) disconnects all the modules from the entrance door & wiper control panel. Connector C3 (rear electrical panel) disconnects all the modules at the rear of the vehicle from the network.

Example: Disconnect C5 and C1 and then verify the status of the errors. If the front modules (A41 to A46) now give inactive errors, which means short-circuit is elsewhere than in the front electrical & service compartment.

6.2.1 CAN Connection On The Telltale Panel And The Hvac Control Unit

The telltale panel module and HVAC module are linked to the MCM by a CAN connection. In case of a CAN connection default, the telltale panel LCD display shows "CAN", and on the HVAC control unit, the temperature display indicates "---". To confirm a CAN connection default, check

that the fan speed on the driver's section HVAC control unit cannot be adjusted.

Moreover, specific error messages from these 2 modules can be read in the ELECTRICAL SYSTEM menu.

NOTE

While downloading a new vehicle program in the MCM from a computer, the CAN network is temporarily interrupted and therefore a CAN reference appears in the telltale panel LCD display.

6.2.2 Spare CAN

A spare CAN network is installed between the front and the rear of the vehicle. It has connectors installed at each end to facilitate swapping from the regular CAN network to the spare CAN network. Refer to the vehicle wiring diagram and section 4.6 for more information.

6.3 ELECTRICAL SYSTEM DIAGNOSTIC

Using the Driver's Info Display (DID), check if there are active errors in the vehicle electrical system. With the SYSTEM DIAGNOSTIC menu, highlight FAULT DIAGNOSTIC and then highlight ELECTRICAL SYSTEM to request a diagnostic of the electrical system from the MCM. Press the enter key. If applicable, the DID shows the multiplex device ID, the fault messages or fault codes recorded. When more than one fault is recorded, an arrow pointing down appears on the right of the display. Use the down arrow to see all the fault messages.

Once the problem corrected, the DID still shows the fault as being active. You have to leave the FAULT DIAGNOSTIC menu, wait approximately 20 to 30 seconds and then return to FAULT DIAGNOSTIC to request a new diagnostic of the ELECTRICAL SYSTEM from the MCM. The DID should display the fault as being inactive. The MCM can store up to 20 faults, i.e. the first 10 and the last 10. Middle faults will be erased. If the breakers are tripped, the fault history will be erased from the MCM memory.

NOTE

When performing an electrical system diagnostic with the DID, the message « No Response ModA41» indicates either module A41 is not responding due to a CAN link problem or module A41 is not powered. Similar messages exist for all modules (A42, A43, A44, etc.).

NOTE

Because it is easier to do, check first if the module is powered by probing on its gray connector. If it is, then you can conclude that there is a CAN link problem. Refer to CAN NETWORK LAYOUT AND TROUBLESHOOTING in this section.

6.4 MULTIPLEX INPUT TEST MODE

The multiplex input test provides useful information to diagnose multiplexed inputs of switches and sensors, complimentary to the electrical system diagnosis.

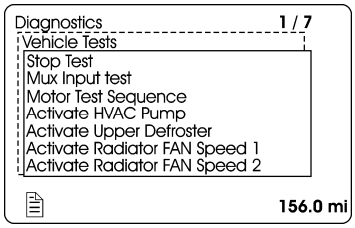

To initiate the test mode, use the Driver Information Display (DID) DIAGNOSTICS menu. Select VEHICLE TESTS submenu and then MUX INPUT TEST. Press ENTER button to start the test. The DID status line will show TEST to confirm the test mode is active. To exit test, press ESCAPE button, select STOP TEST submenu and then press ENTER button twice. TEST will disappear from the DID status line.

Instrument panel audible alarm emits a *beep* each time an OFF/ON transition is detected on a multiplex input. This allows quick verifying if the switches and sensors are detected or seen by the multiplex modules. When the vehicle is parked, the back-up alarm also emits a *beep* that allows verification of the sensors at the rear of the vehicle.

Certain inputs are doubled (for example, turn signal switch on multi-function lever, door operating buttons) and also other inputs activate at the same time (ex. kneeling switch and Kneeling proximity sensor switch). For these inputs, 2 *beeps* are emitted. If only one *beep* is heard, one of the inputs is defective.

SWITCHES AND SENSORS SUPPORTED BY THE SWITCH/SENSOR TEST MODE
HVAC control unit driver's section ON/OFF
HVAC control unit driver recirculate switch
HVAC overhead compartment fan switch
HVAC control unit passenger's section ON/OFF
Radiator fan clutch switch
Engine rear start selector switch "rear start"
Engine rear start selector switch "normal"
Engine ignition front switch
Engine ignition rear switch
Entrance door inside opening /closing switch
Entrance door outside opening /closing switch
Electric horn button
Kneeling down switch
Kneeling up switch
Baggage compartment locking system switch
Baggage compartment door ajar open sensor
Steering wheel control buttons
Lavatory emergency switch
Interior lighting switch, 2 positions
Driver's area lighting switch
Reading lights switch
Multi-function lever LH turn signal
Multi-function lever RH turn signal
Fog lights switch
Hazard warning flashers switch
Multi-function lever courtesy blinkers switch
Headlights switch, 2 positions
Multi-function lever headlights beam toggle switch
Baggage compartment door lock/unlock switch
Tag axle lever
Wheelchair lift activation switch
Windshield lower wiper
Multi-function lever windshield wipers intermit.
Lower windshield wipers backup switch
Lower windshield washer switch
Upper windshield washer switch
Upper windshield wipers switch, 2 positions

The following inputs, either certain options or sensors which are difficult to activate, are not supported by the switch/sensor test:

- Service chime enable switch,
- Horn selector switch,
- Outside rear view mirror heat,
- Mirror control switches,
- Low-buoy switch,
- Starter sensor,
- ABS warning input,
- WCL switch,
- Driver's power window switch,
- Fog lights switch,
- Alternator sensors 1 & 2,
- Retarder active signal,
- Radiator fan speed 1 & 2 signals.

In test mode, with the parking brake applied and the passenger set point set to a value higher than 64°F (18°C), the circulator pump is not set to OFF as it would normally do when the outside temperature gets above 50°F (10°C). This feature allows verification of the pump when inside a garage. This is also useful when working on the heating system to remove air pockets trapped in the system.

When performing an A/C cooling test and having the water pump shut off is required, initiate the multiplex input test mode. While in this mode, just set the passenger set point temperature to the minimum 64°F (18°C) to shut off the pump.

6.5 MOTOR TEST SEQUENCE

The test mode allows testing the motors and electric contactors without the need to have the engine running. Note that while in test mode, the engine cannot be started.

Prerequisite conditions for the motor test mode:

A. The battery charger must be connected to a 110-120 volt power supply. If not, the test will be interrupted when the voltage drops below 24.4 volts,

B. Engine not running,

C. Parking brake applied,

DANGER

Before starting the test sequence, make sure nobody is working in the evaporator or condenser compartment.

NOTE

The back-up alarm will beep ten (10) times prior the test starts to warn people that may be working on the vehicle.

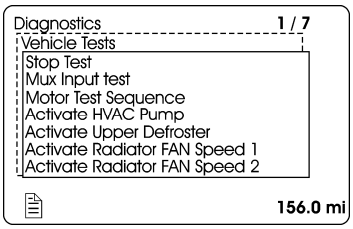

To enter this mode:

- Using the dashboard DID, select DIAGNOSTICS menu and press ENTER button ;
- Select VEHICLE TEST, press ENTER button then select MOTOR TEST SEQUENCE and press ENTER button to initiate the test mode for electrical motors;
- Ten (10) *beeps* can be heard indicating the motor test mode has started.

Using the test mode:

- During the entire test, the telltale panel audible alarm gives a signal each second to remind that the motor test mode is underway.

6.5.1 Test Sequence – Coaches only

Go to the condenser compartment:

- The condenser fans start at speed 1, then after a short pause, speed 2 activates.
- The passenger's unit refrigerant solenoid valve activates.

Then 5 beeps can be heard from the back-up alarm to indicate to go to the engine compartment.

In the engine compartment, the sequence is as follows:

- Toilet fan motor starts.
- A/C compressor clutch activates 3 times.
- Left compressor unloader activates 3 times.
- Right compressor unloader activates 3 times.
- Fan clutch is disengaged (fan can be turned freely by hand).
- Fan clutch engages in speed 1 (fan can be turned by hand but with a certain resistance).
- Fan clutch engages in speed 2 (cannot be turned but hand).

5 beeps from the back-up alarm indicate to go to the evaporator compartment.

In the evaporator compartment:

- Evaporator fan motor runs at speed 1 for 3 seconds then runs at speed 2 for 2 seconds.
- Hot water pump starts running for 5 seconds and hot water pneumatic valve cycles 3 times.

5 beeps from the back-up alarm indicate to get to the driver's area inside the vehicle.

Inside the vehicle:

- The driver's HVAC unit refrigerant solenoid valve cycles 3 times and the hot water pneumatic valve cycles 3 times also.
- Left and right overhead compartment fans start running one after the other for 5 seconds.

- The upper windshield defroster (optional) starts running.

To exit the electric motors test sequence, press ESCAPE button, select STOP TEST submenu and then press ENTER button twice.

6.5.2 Test Sequence – VIP With Central HVAC System

Driver's & passenger's unit fresh air damper open. *[20 seconds delay]*

Go to the condenser compartment:

- Check the fans. The condenser motors start at speed 1 for 3 seconds, then after a short pause, speed 2 activates. *[3 seconds delay]*
- The passenger's unit refrigerant solenoid valve activates 3 times. *[10 seconds delay]*

Then 5 beeps can be heard from the back-up alarm to indicate to go to the engine compartment and main power compartment.

In the engine compartment, the sequence is as follows:

- The main power compartment door fan starts running for 3 seconds (will not run if door is open). *[10 seconds delay]*
- A/C compressor clutch activates 3 times.
- Left compressor unloader activates 3 times.
- Right compressor unloader activates 3 times. *[5 seconds delay]*
- Radiator fan clutch is disengaged (fan can be turned freely by hand). *[3 seconds delay]*
- Fan clutch engages in speed 1 (fan can be turned by hand but with a certain resistance). *[3 seconds delay]*
- Fan clutch engages in speed 2 (cannot be turned but hand). *[10 seconds delay]*

5 beeps from the back-up alarm indicate to go to the evaporator compartment.

In the evaporator compartment:

- Evaporator fan motor runs at speed 1 for 3 seconds then runs at speed 2 for 2 seconds.
- Hot water pump starts running for 5 seconds and hot water pneumatic valve cycles 3 times. *[20 seconds delay]*

5 beeps from the back-up alarm indicate to go to the spare wheel compartment behind the reclining bumper.

Inside the spare wheel compartment:

- Driver's unit refrigerant solenoid valve activates 3 times.
- Driver's unit hot water pneumatic valve cycles 3 times.
- Closing of the fresh air dampers.

To exit the electric motors test sequence, press ESCAPE button, select STOP TEST submenu and then press ENTER button twice.

6.5.3 Test Sequence – VIP With Small HVAC System

Driver's unit fresh air damper opening. *[20 seconds delay]*

Then 5 beeps can be heard from the back-up alarm to indicate to go to the engine compartment and main power compartment.

In the engine compartment, the sequence is as follows:

- The main power compartment door fan starts running for 3 seconds (will not run if door is open). *[10 seconds delay]*
- A/C compressor clutch activated 3 times. *[5 seconds delay]*

- Radiator fan clutch is disengaged (fan can be turned freely by hand). *[3 seconds delay]*
- Fan clutch engages in speed 1 (fan can be turned by hand but with a certain resistance). *[3 seconds delay]*
- Fan clutch engages in speed 2 (cannot be turned but hand). *[10 seconds delay]*

5 beeps from the back-up alarm indicate to go to the spare wheel compartment behind the reclining bumper.

Inside the spare wheel compartment:

- Auxiliary unit refrigerant solenoid valve activates 3 times. [*10 seconds delay]*
- Hot water pump starts running for 5 seconds.
- Driver's unit refrigerant solenoid valve activates 3 times.
- Driver's unit hot water pneumatic valve cycles 3 times.
- Closing of the fresh air dampers.

To exit the electric motors test sequence, press ESCAPE button, select STOP TEST submenu and then press ENTER button twice.

6.6 FORCED ACTIVATION OF THE RADIATOR FAN CLUTCH

To prevent the engine from overheating in case of malfunction of the clutch activation system, it is possible to force activation of the clutch.

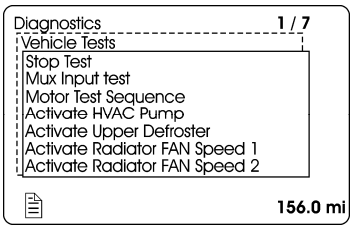

1. On the Driver Information Display, select DIAGNOSTICS menu. Select VEHICLE TESTS submenu and then ACTIVATE RADIATOR FAN SPEED 1 or ACTIVATE RADIATOR FAN SPEED 2 as required.
2. The DID status line will show TEST to confirm the forced activation of the radiator fan clutch. To cancel, turn the ignition switch to the OFF position or press ESCAPE button, select STOP TEST submenu and then press ENTER button twice. TEST will disappear from the DID status line.

If the fan clutch does not engage using this procedure then the clutch is faulty or the wiring between the multiplex module and the clutch is faulty. Mechanically lock the fan clutch as described in section 05: COOLING SYSTEM of the maintenance manual.

6.7 CAN NETWORK LAYOUT AND TROUBLESHOOTING

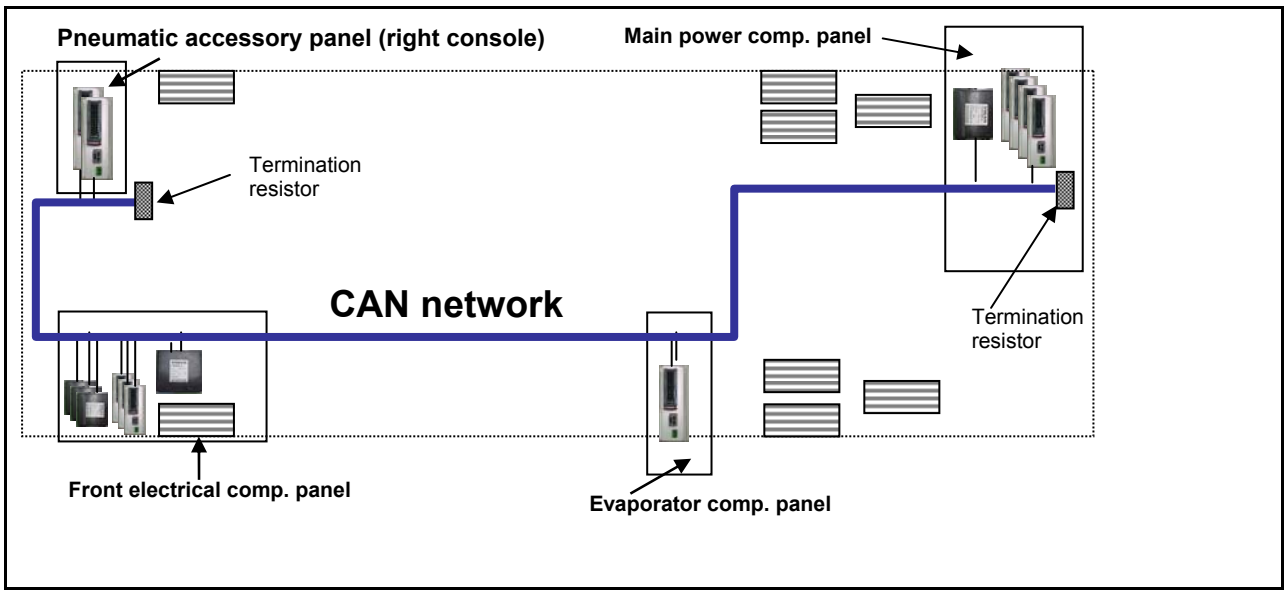

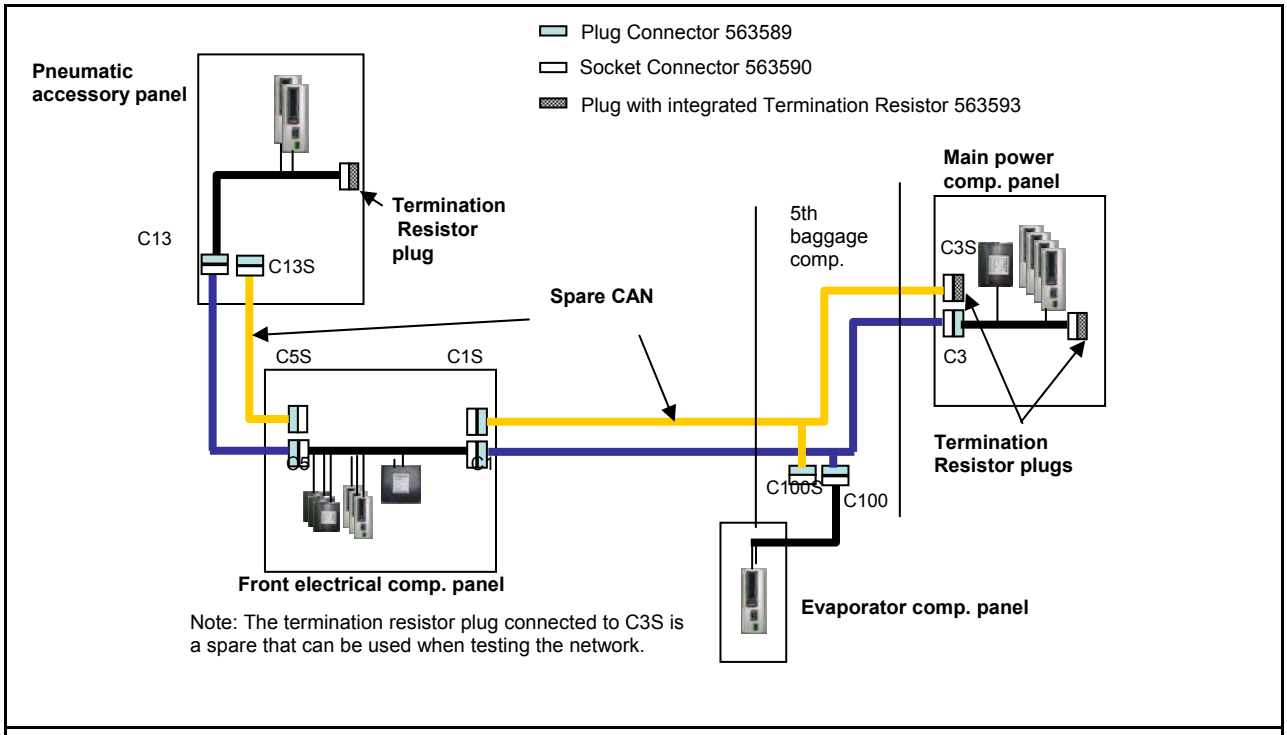

If all 14 modules (A41 to A54) are showed as Not Responding and Active Fault, the problem could be:

- A short circuit somewhere on the CAN network.
- The network is completely open circuit. That means none of the two termination resistors are connected.

Several simple tests can be done to locate the problem.

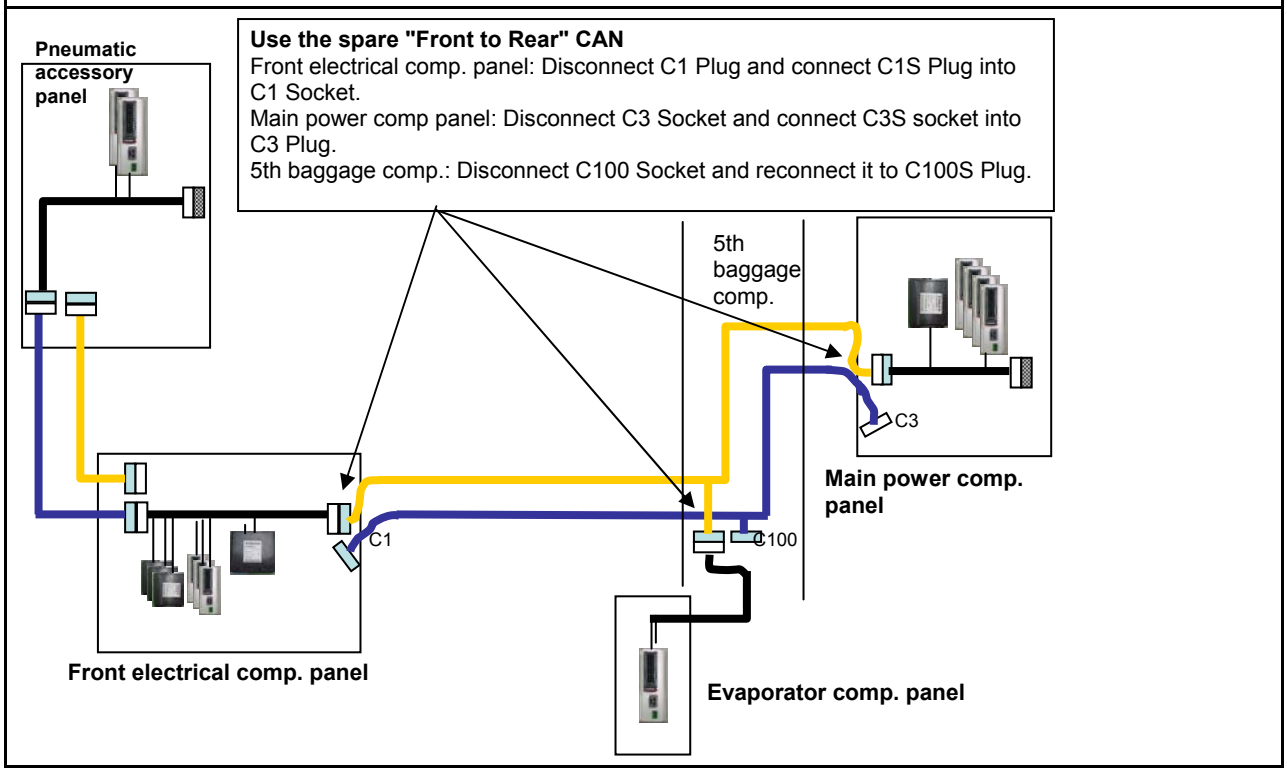

All modules including Wake-up modules and MCM have to be powered OFF prior to probe the CAN lines with an ohmmeter.

Probing the resistance between the CAN-H and CAN-L wire is a useful method to localize short circuits or open circuit on the CAN network. However, when doing so, make sure none of the modules connected to the CAN line are powered, including wake-up powered modules and battery direct supply module (MCM). Otherwise the measured value is invalid and will always show OL (Open Load). This is because the modules are applying a voltage on the CAN lines and this is fooling the ohmmeter.

Proceed as follow when probing the CAN line with an ohmmeter in order to get a valid reading:

- **Turn ignition key to the OFF position.**
- **Set the battery master switch to the OFF position to turn all Wake-up modules power to OFF.**
- **Trip circuit breakers CB2, CB4 and CB6 to remove direct battery power from the MCM.**

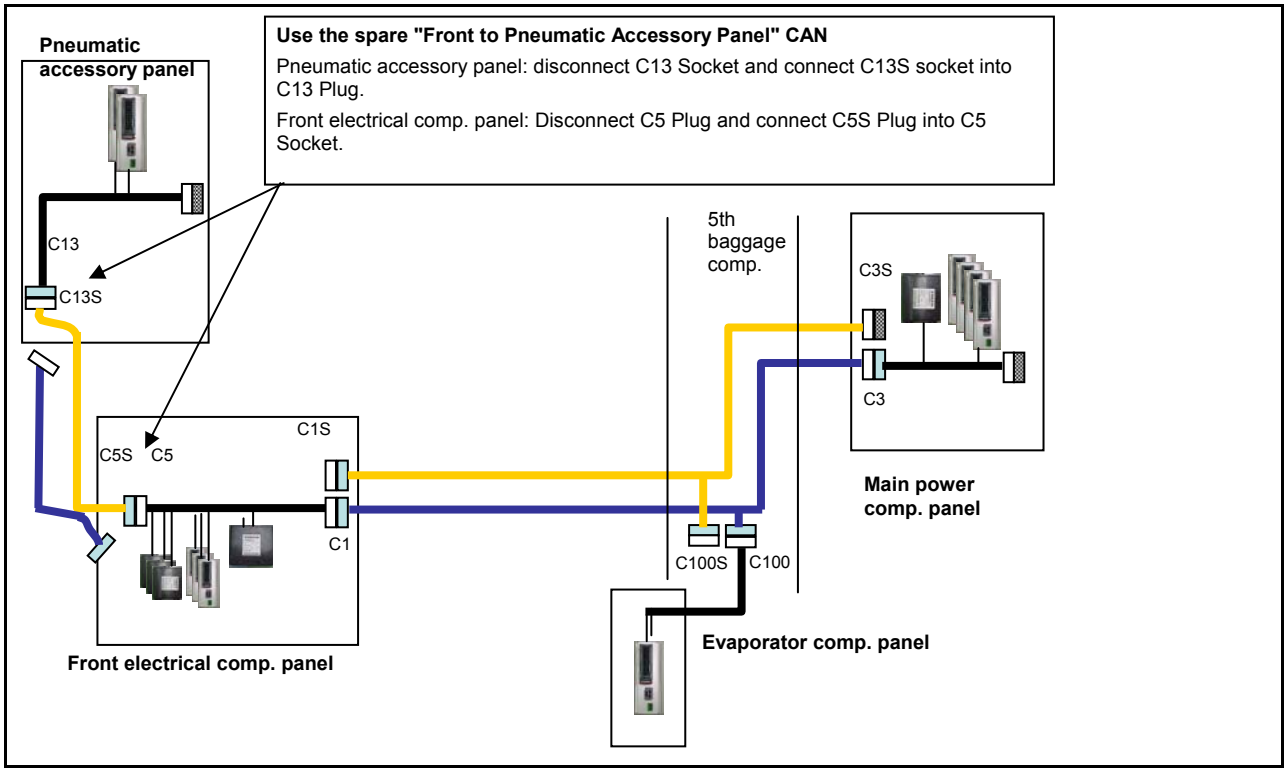
Use the spare "Front to Pneumatic Accessory Panel" CAN
Pneumatic accessory panel: disconnect C13 Socket and connect C13S socket into C13 Plug.
Front electrical comp. panel: Disconnect C5 Plug and connect C5S Plug into C5 Socket.
Pneumatic accessory panel
C13
C13S
5th baggage comp.
C3S
C3
Main power comp. panel
C1S
C5S
C5
C1
C100S
C100
Evaporator comp. panel
Front electrical comp. panel

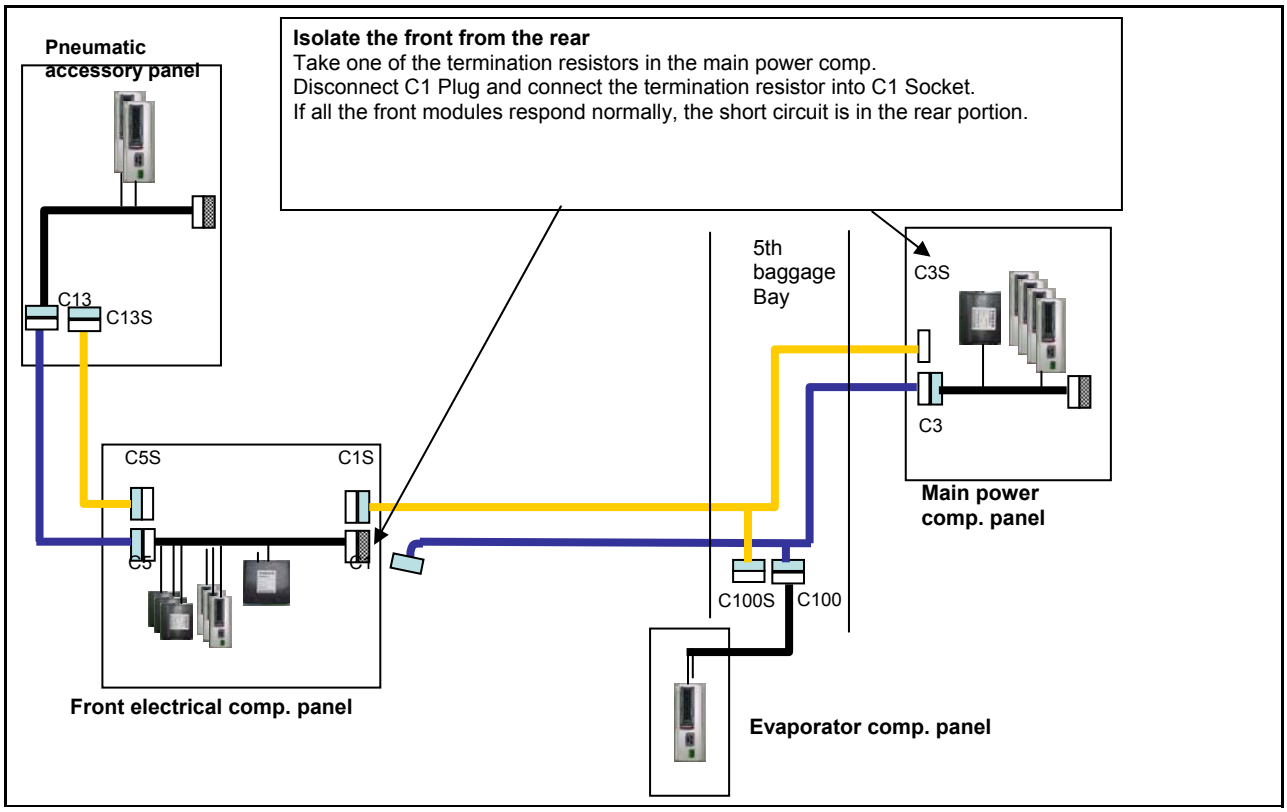
Isolate the front from the rear
Take one of the termination resistors in the main power comp.
Disconnect C1 Plug and connect the termination resistor into C1 Socket.
If all the front modules respond normally, the short circuit is in the rear portion.
Pneumatic accessory panel
C13
C13S
5th baggage Bay
C3S
C3
Main power comp. panel
C5S
C1S
C5
C1
C100S
C100
Evaporator comp. panel
Front electrical comp. panel

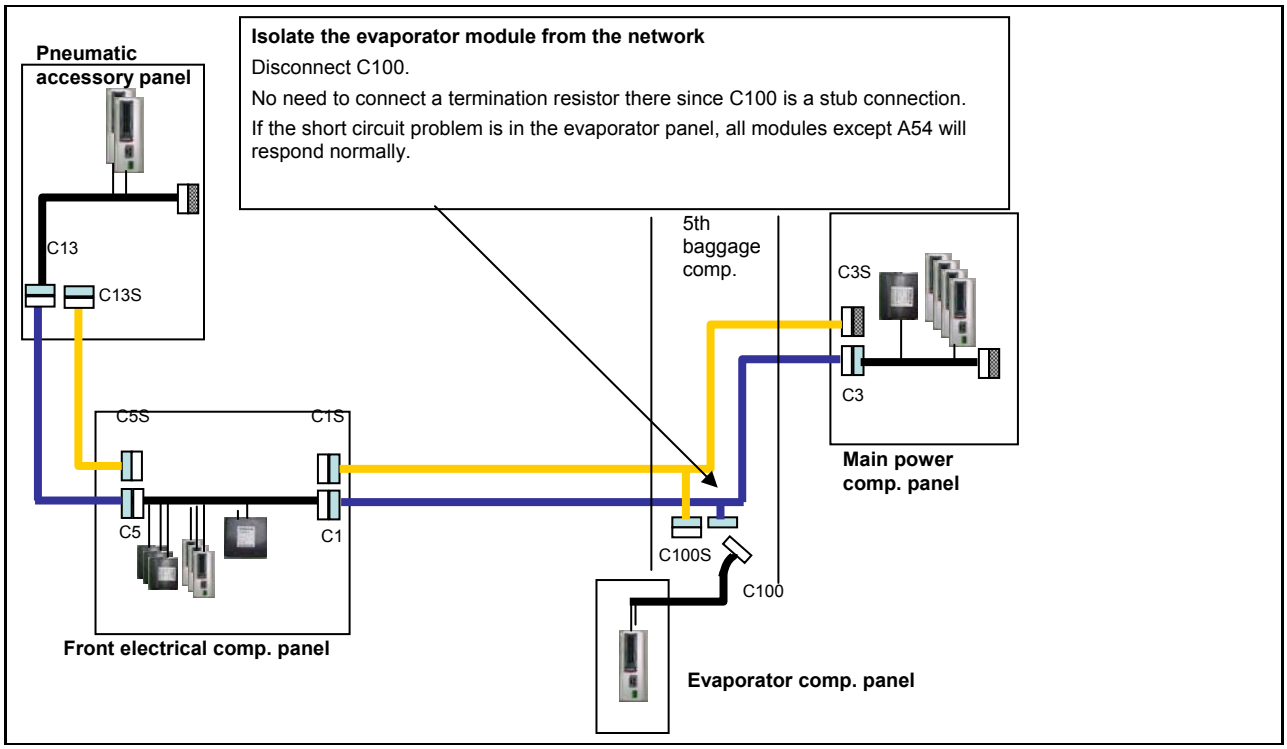
Isolate the evaporator module from the network
Disconnect C100.
No need to connect a termination resistor there since C100 is a stub connection.
If the short circuit problem is in the evaporator panel, all modules except A54 will respond normally.
Pneumatic accessory panel
C13
C13S
5th baggage comp.
C3S
C3
Main power comp. panel
C5S
C1S
C5
C1
C100S
C100
Front electrical comp. panel
Evaporator comp. panel

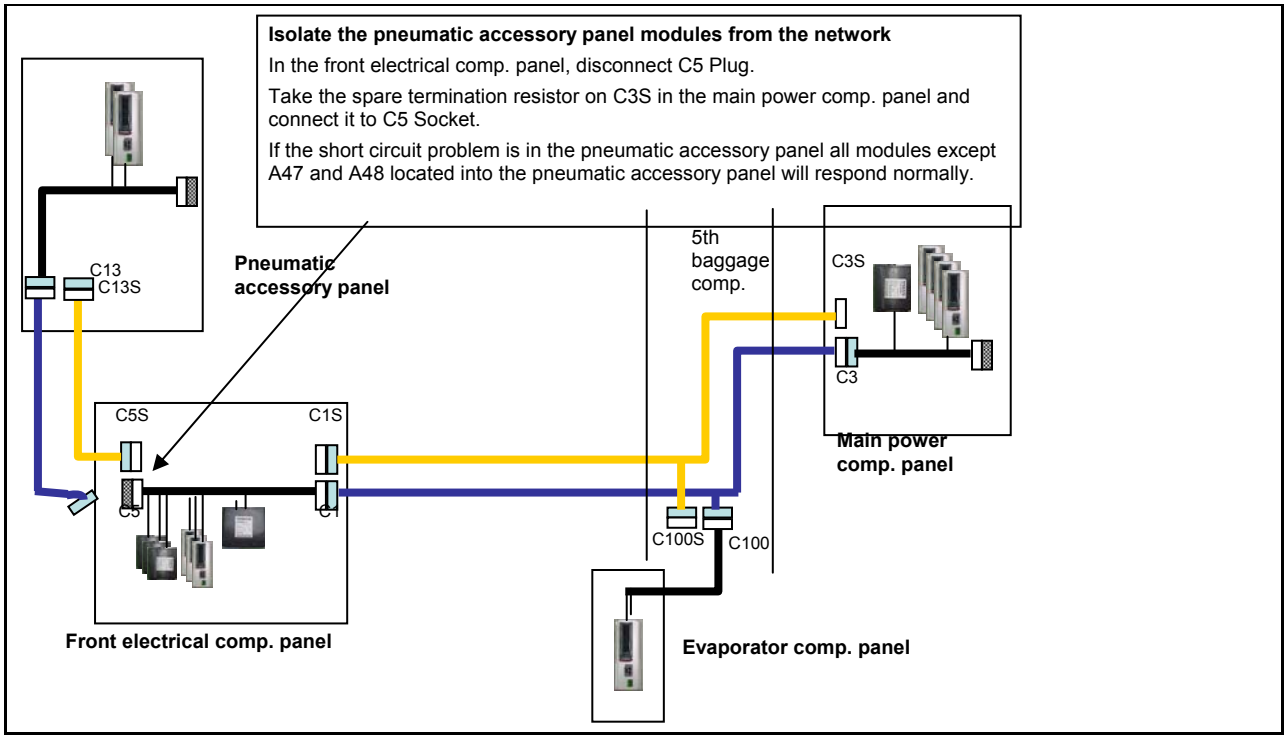
Isolate the pneumatic accessory panel modules from the network
In the front electrical comp. panel, disconnect C5 Plug.
Take the spare termination resistor on C3S in the main power comp. panel and connect it to C5 Socket.
If the short circuit problem is in the pneumatic accessory panel all modules except A47 and A48 located into the pneumatic accessory panel will respond normally.
C13
C13S
Pneumatic accessory panel
5th baggage comp.
C3S
C3
Main power comp. panel
C5S
C1S
C5
C1
C100S
C100
Front electrical comp. panel
Evaporator comp. panel

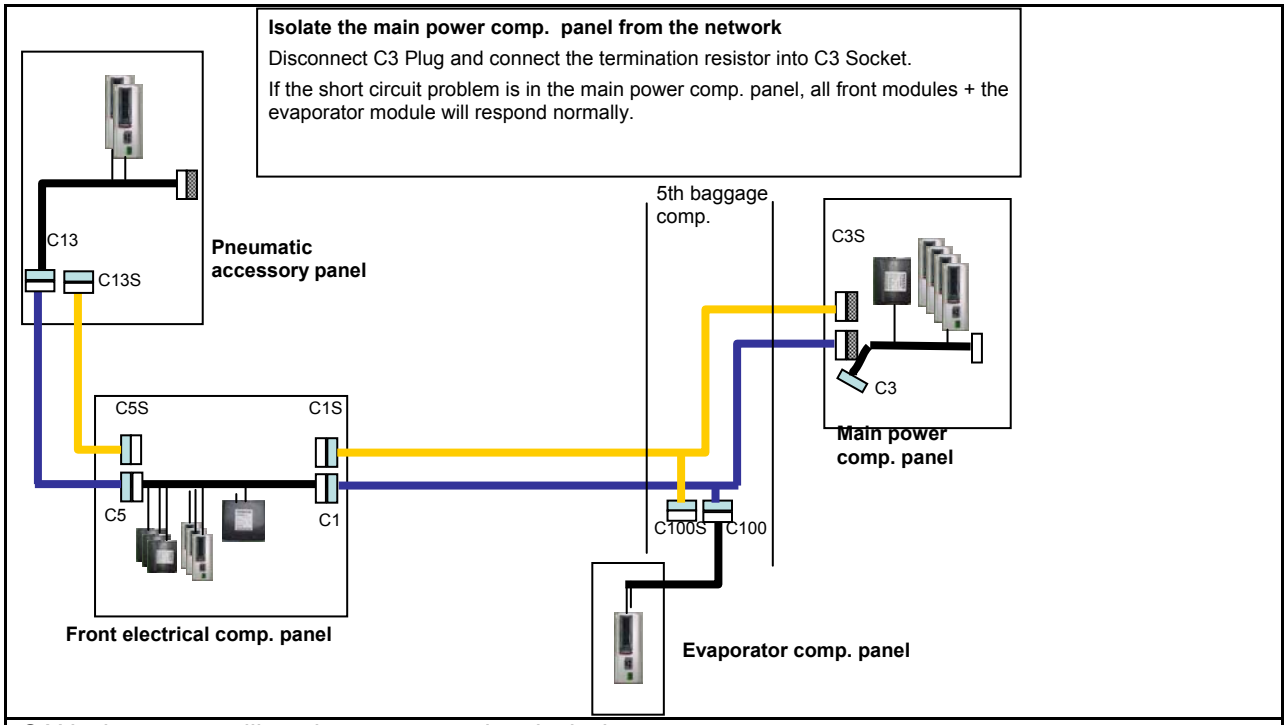

CAN wires are not like other common electrical wires.

- Maintaining a proper wire twisting is important. The two yellow and green wires must be twisted and in close contact all along the network to maintain the transmission line impedance.
- A slack handmade twisting is not acceptable.
- There should be no more than 50 mm (2 inches) without twist at the connection points.

We recommend replacing the CAN harnesses instead of trying to repair them.

6.8 TROUBLESHOOTING

Problem/Symptom	Probable Causes	Actions
Vehicle does not Start	Rear Start selector switch is not in the NORMAL position Master cut-out switch on the rear electrical panel is in the OFF position (down)	1. Check that the rear start selector switch is flipped up to NORMAL start position and master cut-out switch is flipped up to ON and retry cranking 2. Flip the rear start selector switch to “Rear Start” and start the vehicle from the rear
	CAN network problem (Multiplex) Module A53 not powered or is defective Engine ECM does not receive the ignition signal Engine ECM is not powered	If the vehicle does not start from the rear: 1. Verify that module A53 is powered: a) Check the SYSTEM DIAGNOSTIC menu of Driver Information Display (DID). Select FAULT DIAGNOSTIC and ELECTRICAL SYSTEM. The message “No Response ModA53, Active”, indicates a power problem on the module or a CAN network problem. b) Check / reset circuit breaker CB5 c) Check / replace fuse F65 d) Probe gray connector on module to see if it is powered. 2. Verify that the engine ECM is powered and get the ignition signal a) Check / reset circuit breaker CB8 Check / replace fuse F74 b) Check / reset circuit breaker CB2 Check / replace fuse F78
None of the Multiplexed functions are operating, including the basic limp-home functions (door opening, flashers, wipers in speed 1) “FLIP REAR BREAKER TO INITIATE I/O MODULES PROGRAMMING” pop-up message appears in the DID *Note: The sunshades are still functioning since these are not multiplexed*	The program version in the MCM is different than the program in the I/O modules and the MCM is forcing all I/O modules to stay inactive	1. Engage the auto-programming of the I/O modules: Turn the ignition key to the ON position, trip and reset circuit breaker CB6. 2. The DID indicates "MUX AUTOPROGRAMMING I/O MODULE PLEASE WAIT" until the reprogramming is complete.
Many secondary functions	The MCM module does not	1. Check / reset circuit breaker CB6.

Problem/Symptom	Probable Causes	Actions
(not essential for driving) not functioning (interior lighting, driver's area lighting, wiper speed 2 and intermittent). Marker lights and clearance lights are turned ON when setting ignition to the ON position.	receive 24 V power. The CAN network is not working. It could be caused by a short on the network, an open circuit, a problem with the MCM or the MCM being disconnected from the network.	Check / replace fuse F1 2. Operate in limp-home mode by starting the vehicle from the engine compartment (REAR START). All functions essential to drive are available To close and lock the door, pull the door manually up to its closed position and it will lock by itself. The door opening button is still functioning
No temperature control in the passenger area Passenger temperature display indicates two dashes "--"	Problem with the temperature sensor located in the evaporator compartment air intake or the sensor wiring	Instruct the driver to manually control the temperature by playing with the passenger set point. Set above 22°C (72°F) to heat and below 22° C (72°F) to cool
Entrance door does not open nor close using the control buttons Defroster fan not functioning Windshield wipers not functioning in speed 1 or intermittent	Module A47 is not powered or is faulty	1. Check the SYSTEM DIAGNOSTIC menu of Driver Information Display (DID). Select FAULT DIAGNOSTIC and ELECTRICAL SYSTEM. The message “No Response ModA47, Active” indicates a power problem on the module. (A CAN network problem would show the same message but doesn't produce these symptoms). 2. Check / reset circuit breaker CB6 3. Check / replace fuse F5 4. Probe gray connector on module to see if it is powered. 5. Use the air release valves near the entrance door and in the front service compartment to lock / unlock the door
Windshield wipers not functioning in speed 1 or intermittent	No power on R23	Check / replace fuse F18
HVAC condenser fans not functioning in speed 1	Circuit breaker CB7 was manually tripped and not reset	Check / reset circuit breaker CB7
HVAC condenser fans not functioning in speed 2	Circuit breaker CB7 was manually tripped and not reset	Check / reset circuit breaker CB7
Windshield washer not functioning	Module A46 is not powered	1. Check the SYSTEM DIAGNOSTIC menu of Driver Information Display

Problem/Symptom	Probable Causes	Actions
Windshield upper section de-icing system not functioning Defroster fan is functioning but no heat or cooling available in the driver area.	or is faulty	(DID). Select FAULT DIAGNOSTIC and ELECTRICAL SYSTEM. The message “No Response ModA46, Active” indicates a power problem on the module. (A CAN network problem would show the same message but doesn't produce these symptoms). 2. Check / reset circuit breaker CB1 3. Check / replace fuse F12 or F13 4. Probe gray connector on module to see if it is powered.
Low beam headlights and front flasher on left side not functioning Electric horn not functioning	Module A45 is not powered or is faulty	1. Check the SYSTEM DIAGNOSTIC menu of Driver Information Display (DID). Select FAULT DIAGNOSTIC and ELECTRICAL SYSTEM. The message “No Response ModA45, Active” indicates a power problem on the module. (A CAN network problem would show the same message but doesn't produce these symptoms). 2. Check / reset circuit breaker CB2 3. Check / replace fuse F33 and F34 4. Probe gray connector on module to see if it is powered.
Low beam headlights and flasher on right side not functioning	Module A48 is not powered or is faulty	1. Check the SYSTEM DIAGNOSTIC menu of Driver Information Display (DID). Select FAULT DIAGNOSTIC and ELECTRICAL SYSTEM. The message “No Response ModA48, Active” indicates a power problem on the module. (A CAN network problem would show the same message but doesn't produce these symptoms). 2. Check / reset circuit breaker CB2 3. Check / replace fuse F33 and F34 4. Probe gray connector on module to see if it is powered.
Rear flashers not functioning Stoplights and center stoplights not functioning	Module A51 is not powered or is faulty	1. Check the SYSTEM DIAGNOSTIC menu of Driver Information Display (DID). Select FAULT DIAGNOSTIC and ELECTRICAL SYSTEM. The message “No Response ModA51, Active” indicates a power problem on the module. (A CAN network problem would show the same message but doesn't produce this symptom).

Problem/Symptom	Probable Causes	Actions
		2. Check / reset circuit breaker CB2 3. Check / replace fuse F80 4. Probe gray connector on module to see if it is powered.
Engine is overheating and radiator fan clutch does not engage The A/C compressor clutch does not engage	Module A52 is not powered or is faulty	1. Check the SYSTEM DIAGNOSTIC menu of Driver Information Display (DID). Select FAULT DIAGNOSTIC and ELECTRICAL SYSTEM. The message “No Response ModA52, Active” indicates a power problem on the module. (A CAN network problem would show the same message but doesn't produce this symptom). 2. Check / reset circuit breaker CB5 3. Check / replace fuse F65 4. Probe gray connector on module to see if it is powered.
Evaporator fan not functioning	Circuit breaker CB3 tripped Module A54 is not powered or is faulty	1. Check / reset circuit breaker CB3 2. Check the SYSTEM DIAGNOSTIC menu of Driver Information Display (DID). Select FAULT DIAGNOSTIC and ELECTRICAL SYSTEM. The message “No Response ModA54, Active” indicates a power problem on the module. (A CAN network problem would show the same message but doesn't produce this symptom). 3. Check / reset circuit breaker CB5 4. Check / replace fuse F67 , F68 5. Probe gray connector on module to see if it is powered.
HVAC condenser fans not functioning in speed 1	Module A54 is not powered or is faulty	1. Check the SYSTEM DIAGNOSTIC menu of Driver Information Display (DID). Select FAULT DIAGNOSTIC and ELECTRICAL SYSTEM. The message “No Response ModA54, Active” indicates a power problem on the module. (A CAN network problem would show the same message but doesn't produce this symptom). 2. Check / reset circuit breaker CB5 3. Check / replace fuse F67 , F68 4. Probe gray connector on module to see if it is powered.

Problem/Symptom	Probable Causes	Actions
Sound system not functioning	Circuit breaker CB4 or CB11 was manually tripped and not reset	Check / reset circuit breaker CB4 or CB11
Fire alarm telltale light and audible alarm always ON and there is no fire or high temperature in the engine compartment	Short-circuited fire sensor or defective sensor	Prior to start the vehicle, cycle the ignition key to the ON position, OFF position and then ON position again and then start the vehicle. This will deactivate the fire alarm function. This has to be repeated each time the vehicle is re-started
The vehicle is parked and the electrical horn is activated to indicate a fire in the engine compartment but there is no fire	Short-circuited fire sensor or defective sensor	Cycle the ignition key between the ON and OFF position twice within 3 seconds. This will deactivate the fire alarm function. This has to be repeated each time the vehicle is parked
A single light, a group of LED lights or another function of the vehicle is not functioning	The multiplex outputs are protected in current by an internal “soft-fuse”. When an output is shorted, it turns OFF and stays OFF until the "soft-fuse" is reset	Turn the ignition key to the OFF position and turn to the ON position again. This resets all "soft –fuses"
No backlighting in the instrument cluster	Circuit breaker CB10 is tripped or fuse F20/F29 blown	Check / reset circuit breaker CB10 Check / replace fuse F20/F29
The radiator fan clutch does not function and the engine is overheating		You can manually engage the radiator fan clutch speed 1 or speed 2. 1. On the Driver Information Display, select DIAGNOSTICS menu. Select VEHICLE TESTS submenu and then ACTIVATE RADIATOR FAN SPEED 1 or ACTIVATE RADIATOR FAN SPEED 2. 2. The DID status line will show TEST to confirm the forced activation of the radiator fan clutch. To cancel, turn the ignition switch to the OFF position or press ESCAPE button, select STOP TEST submenu and then press ENTER button twice. TEST will disappear from the DID status line. If the fan clutch does not engage using this procedure then the clutch is faulty or the wiring between the multiplex module and the clutch is faulty. Mechanically lock the fan clutch as described in section 05: COOLING SYSTEM of the maintenance manual.

6.9 ESSENTIAL FUNCTIONS TO OPERATE THE VEHICLE

Even with a defective MCM (Chassis Electronic Control Module) or a CAN network problem, essential base functions are maintained to rear start the vehicle from the engine compartment and drive in a secure manner.

However, many secondary functions are lost. In this case, the following directives must be followed.

- Never connect a battery charger when the ignition is at the ON position on a vehicle with a CAN defective or certain functions will start up by themselves,
- Disconnect the charger before starting the vehicle, if not the default functions will not activate,
- If the default mode does not activate, try to turn the ignition OFF while ensuring that no charger is connected and then restart the vehicle.

6.9.1 Available Functions

- Startup: Turn on the ignition in the driver's area and rear start the vehicle from the engine compartment,
- Opening the door: Functions normally,
- Closing the door: Manually pull on the door and it will lock automatically,
- Windshield wipers: Wipers functions at 1st speed only,
- Headlights: Low beams only,
- Directional signals: Rear and front only,
- Stoplights: 2 upper stoplights + high-mounted stoplight are functional,
- HVAC: Functional with set point fixed at 70°F (22°C), evaporator and condenser fixed at speed 1, defroster fixed at speed 4.

6.10 LOWER PRIORITY MODULES FOR BREAKDOWN SERVICE

Modules A43 (IO-A) and A44 (IO-B) affect lower priority functions. These modules can therefore be used as spare parts for breakdown service while on the road.

Functions lost if A43 is removed and used as spare part:

- High beams,
- Ability to turn on the parking lights only,
- “Watch your step” sign,
- Driver's area lighting,
- Tag axle activation,
- Courtesy lights.
- Functions lost if A44 is removed and used as spare part:
- Fresh air damper mix trap control,
- Driver's area and entrance overhead light,
- Front clearance lights.

6.11 MULTIPLEX MODULES

6.11.1 MCM

The MCM plays the role of interface between the engine ECM, the transmission ECU, the telltale panel module and other IO-A, IO-B modules. When a multiplex module is being replaced, the MCM will inform the new module of its role and function accordingly to the vehicle options. The MCM keeps the back-up program of the vehicle specific multiplex program. So, a specific MCM cannot be removed from a vehicle and installed on another vehicle.

6.11.2 IO-A

IO-A modules receive inputs and control outputs. IO-A's are used for all outputs of 1 amp or less.

6.11.3 IO-B

IO-B modules receive inputs and control outputs. IO-B's are used for outputs up to 30 amps.

6.12 MULTIPLEX MODULES REPLACEMENT

I/O-A, I/O-B modules can be replaced and reprogrammed without having to connect a computer to the vehicle.

The MCM must be reprogrammed using a laptop computer equipped with VPG software, connected to C226 (DB9 connector) found in the front electrical compartment. However, an updated vehicle multiplex program saved on a laptop computer can be uploaded into the MCM module without the need of VPG software.

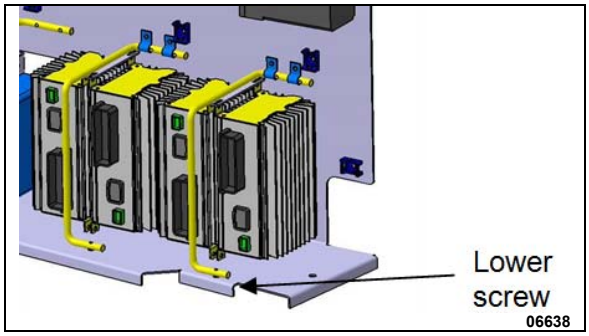

FIGURE 20: IO-B MODULE REMOVAL

6.12.1 Replacing IO-A Or IO-B Modules

Set the ignition switch to the ON position and leave it in that position at all time while performing this procedure.

1. On rear electrical junction panel, trip circuit breaker CB6.
2. Replace the module and plug connectors (for IO-B modules, disconnect the green connector first, then the grey one and finish with the black connector. To disconnect the black connector, slide downwards the red latch. Remove the lower screw that holds the cable attachment rod onto the floor portion of the panel and flip the rod up, this will relieve the IO-B module, (see

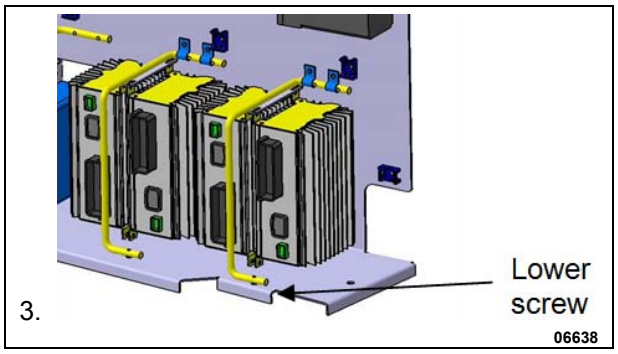

3.

4. Figure 20).
5. Reset circuit breaker CB6. Doing so will initiate the I/O auto programming.
6. The DID indicates "MUX AUTOPROGRAMMING I/O MODULE PLEASE WAIT" until the reprogramming is complete unless a higher priority message must be displayed. If this is the case, press ESCape button repeatedly to acknowledge the higher priority messages.
7. Check the **Diagnostics** menu of the Driver Information Display (DID). Select **Fault Diagnostics** and **Electrical System**. Verify the fault message to be certain the module is reprogrammed. If the module is not reprogrammed, the message “Axx Not Responding” appears where Axx is the module number (Ex: A41, A42…etc).

NOTE

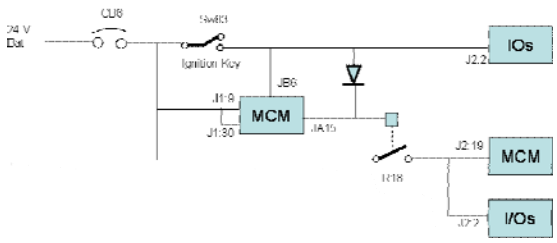

JB6 is a wake-up pin. JA15 output remains active for 5 minutes after JB6 is inactive.

When initiating reprogramming:

Switch SW83 (ignition key) remains closed, providing 24-volt on JB6, I/O modules and R18. All modules get power.

CB6 is tripped and reset which is forcing MCM reboot.

When resetting CB6, all modules get power, MCM goes into “start mode”. I/O modules needing new program will request reprogramming to MCM while in “start mode”.

6.12.2 Replacing the MCM Module

1. Set the ignition key to the ON position and leave it in that position at all time while performing this procedure.
2. On rear electrical junction panel, trip circuit breaker CB6.
3. Replace the module.
4. Reset circuit breaker CB6.

5. The vehicle specific program needs to be uploaded in the MCM.

6.12.3 Uploading the vehicle specific multiplex program in the MCM

A laptop computer running Windows XP or Windows 7 must be connected to the RS232 serial port DB9 connector (identified C226) found on the front service compartment electrical panel. Please contact your Prevost Service Representative in order to get the vehicle specific multiplex program and upload procedure. Save the specific multiplex program on your laptop computer.

7. BOSCH ALTERNATORS

Two 28 volt 150A, self-regulated, belt driven, air-cooled HD 10 BOSCH alternators are used in the 24 volt electrical system.

NOTE
For the complete removal/installation instructions, refer to Maintenance Information ***MI16-17 Bosch HD10 alternator removal and installation*** *included at the end of this section.*

7.1 IDENTIFYING A DEFECTIVE ALTERNATOR

When an alternator is not charging, the *charging system warning light* will illuminate.

charging system warning light

7.1.1 Identifying a Defective Alternator Using the Instrument Cluster DID

If you suspect that one alternator is defective, use this method to determine which one needs to be replaced (1=upper alternator; 2=lower alternator). Proceed as follows:

1. On the DID (driver information display), select *diagnostics* menu.
2. Select *view active faults* and then *electrical system*.
3. An active electrical system faults will appear if an alternator is actually defective. Scroll through the active faults. You may find one of the following messages:

Mid (188) electrical system
Psid 34 (alt 1) upper alt
Fmi (5) open circuit

Mid (188) electrical system
Psid 35 (alt 2) Lower alt
Fmi (5) open circuit

Confirm DID status before removing the defective alternator. In fact, the connectors on the alternators may have been interchanged by mistake.

4. Stop the engine and then disconnect the suspected defective alternator.
5. Start the engine. Back-probe the pin of the alternator known to be in good working condition (refer to 7.1.2 Identifying a Defective Alternator – Back-probing A49 Multiplex Module).
6. If multimeter reads 1-2 volts, then this alternator is defective. A misconnection of the alternator connectors exists.

7.1.2 Identifying a Defective Alternator – Back-probing A49 Multiplex Module

Prerequisite conditions:

a) Engine running;

b) Parking brake applied.

On connector J1 of A49 multiplex module, back-probe pin 8 (A49 J1:8) and a good ground (use ground stud in the compartment). Repeat for pin 9 (A49 J1:9).

Lower alternator: pin 8

Upper alternator: pin 9

Back-probe pin 8 (A49 J1:8):

- If multimeter reads 1-2 volts, the **lower** alternator is defective;

- If multimeter reads 12 volts, you have an open circuit;
- If multimeter reads 26 volts or greater, the **lower** alternator operates normally.

Back-probe pin 9 (A49 J1:9):

- If multimeter reads 1-2 volts, the **upper** alternator is defective;
- If multimeter reads 12 volts, you have an open circuit;
- If multimeter reads 26 volts or greater, the **upper** alternator operates normally.

Note

Validation

Confirm back-probing results before removing the defective alternator. In fact, the connectors on the alternators may have been interchanged by mistake.

1. *Stop the engine and then disconnect the suspected defective alternator.*
2. *Start the engine. Back-probe the pin of the alternator known to be in good working condition.*
3. *If multimeter reads 1-2 volts, then this alternator is defective. A misconnection of the alternator connectors exists.*

7.2 ALTERNATOR DRIVE BELT

MAINTENANCE

Drive belt

Inspect for crack or frayed material at the intervals specified by the Lubrication And Servicing Schedule in Section 24: LUBRICATION & SERVICING.

Removal

1. Insert a ½″ socket drive into the automatic belt tensioner opening.
2. Twist the tensioning arm to slacken belt.
3. Remove belt.

FIGURE 21: ½″ SOCKET DRIVE WRENCH

NOTE

Belts specifications may vary. For proper belt selection, always consult your vehicle Coach Final Record.

Installation

Installation of the alternator drive belt is the reverse of removal.

7.3 ADJUSTMENT

Correct belt tension is required to maximize belt lifespan. The automatic tensioner arm maintains proper belt tension, no adjustment is required.

8. BATTERY EQUALIZER

Vanner “Vann-Guard 70-Series” Battery equalizer is located beside the batteries in battery compartment. Battery Equalizer Owner’s Manual (100 amps) is annexed at the end of this section.

For vehicles with PRIME energy management system, a Vanner “Vann-Bus 80 Series” 100amp Battery equalizer with Smart Monitor is installed beside the batteries in the battery compartment. Owner’s Manual is annexed at the end of this section.

9. STARTER

Refer to Mitsubishi Electric Corporation (MELCO) Service bulletin ME003-P annexed at the end of this section for information and maintenance instruction on MELCO 105P70 starter.

CAUTION

Do not engage starter for more than 15 seconds at a time. If engine does not start within 15 seconds, release ignition key and let starter cool for one minute before attempting to restart.

10. ENGINE BLOCK HEATER

The vehicle may be equipped with an engine immersion-type electric block heater to assist cold weather starting. The heater male electric plug is located on the engine compartment R.H. side door (H3 Series, FIGURE 22).

. To use it, connect the female plug of an electrical extension cord to the heater plug. The extension cord must be plugged into a 110-120 V AC power source only. The engine block heater should be used whenever the vehicle is parked for an extended period of time in cold weather and a suitable power source is available.

10.1 MAINTENANCE

This heater is non-serviceable except for the cord, and if faulty, must be replaced as a unit.

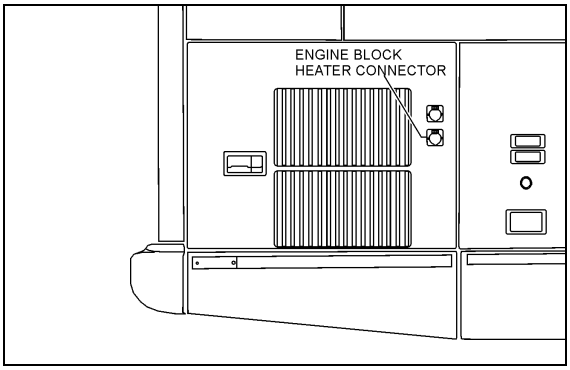

FIGURE 22: ENGINE BLOCK HEATER PLUG LOCATION

11. H3 SERIES EXTERIOR LIGHTING

The circuit for exterior lights, as well as their control switches, relays and circuit breakers are shown on the applicable wiring diagrams. Wiring diagrams are located in the Technical Publication box.

11.1 HEADLIGHTS

Inner headlights are used for high beam and daytime running light while outer headlights are used for low beam. The inner or outer lamp uses the same single filament halogen bulb part number.

NOTE

If vehicle is equipped with optional Xenon headlights, refer to paragraph 6.1.6.

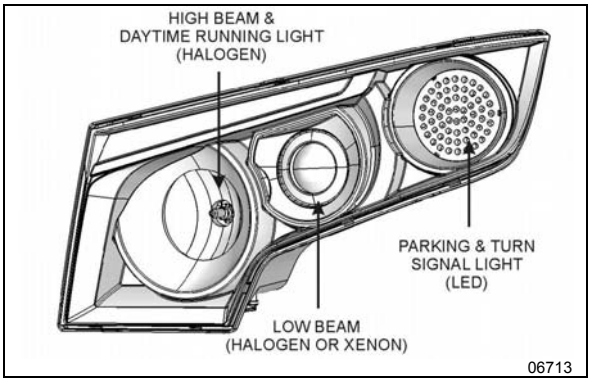

FIGURE 23: HEADLIGHT ASSEMBLY

11.1.1 Headlight Beam Toggle Switch

The multifunction lever located on the steering column is used to select proper lighting. High beams or low beams can be selected by pulling the lever rearward. A high beam indicator on the central dashboard panel is illuminated when the high beam circuit is energized.

NOTE

Pulling the lever rearward while the lights are off will flash the headlights.

11.1.2 Maintenance

Clean headlights with soap and water.

11.1.3 Replacing headlight bulbs

The following illustrations show how to gain access to the bulbs. When replacing a bulb, make sure the ignition switch and light switch are off.

CAUTION

- To prevent burning yourself, do not replace the light bulbs while they are hot.
- Halogen bulbs have pressurized gas inside and require special handling. They can burst or shatter if scratched or dropped. Hold a bulb only by its plastic case. Do not touch the glass part of a bulb with bare hands.

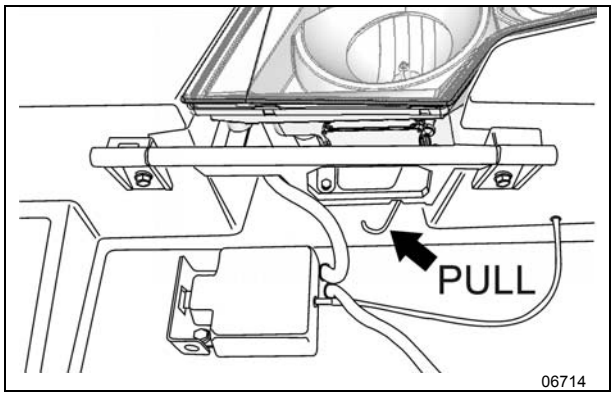

FIGURE 24: ROCKING THE HEADLIGHT ASSEMBLY

1. First, make sure the ignition switch and light switch are off.
2. Pull on the reclining bumper opening handle located inside the front electrical and service compartment.
3. Pull on the rod shown on figure 29 to pivot the headlight assembly.
4. Unscrew the cap to gain access to the bulb connector.
5. HALOGEN: turn the bulb base counterclockwise. XENON: Unscrew the Phillips head screws indicated by arrows, pull the retainer and bulb out (**FIGURE 25**).

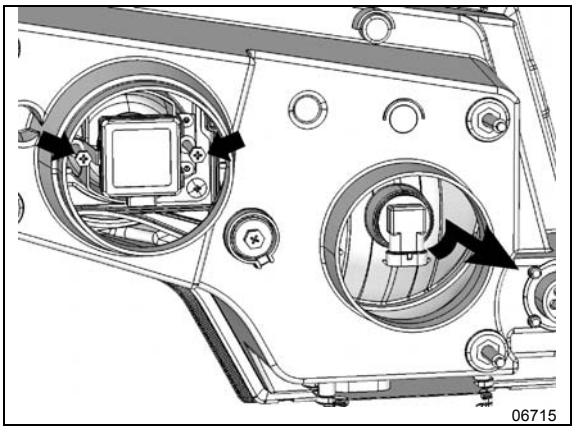

FIGURE 25: HEADLIGHT ASSEMBLY REAR VIEW

CAUTION

During this step, avoid contacting the bulb with the fingers not to alter the bulb life.

6. Unplug the connector while depressing the lock release when applicable.
7. Replace bulb, connect to harness and install into mounting hole.

Aiming is not necessary after replacing the bulb. When aiming is necessary, refer to paragraph “HEADLIGHT AIMING”.

11.1.4 Replacing Front Turn Signal LED module

The front turn signal is part of the front headlight assembly. The turn signal is a sealed unit (LED) located on each front corner and should be replaced as an assembly. Turn signal is visible from both front and side.

Removal and Replacement

1. Rotate the cap to gain access to the LED module.
2. Disconnect the electrical harness connector from the LED module.
3. Unscrew the 3 mounting fasteners and replace LED module.
4. Install wiring connector on back of new turn signal module.

11.1.5 Optional Xenon Headlamp (Low Beam)

The outer lamps of each headlight assembly may be equipped with the optional Xenon lamps.

These lamps improve visibility and provide better lifespan.

CAUTION

To avoid breaking the bulb, make sure the socket is in proper position against the stop.

CAUTION

Never connect a voltmeter or V.O.M. to measure bulb voltage as instrument will be destroyed.

NOTE

Do not disrupt headlight adjustment screws.

When switching on the Xenon headlamp using the rocker switch, a short-circuit test is performed.

Current is detected in the lamp circuit before the ignition time and ignition prevented. Connection of the "hot" lamp to the body mass also prevents ignition. In both cases, the system is cut off within < 0.2 s and can only be restarted via the rocker switch.

In general, the maximum ignition time is < 0.2 s, which period is followed by cutoff. This would happen if a lamp was defected.

Lamp missing: system is cut off after < 0.2 s.

If lamp components or cables are damaged by force (accident) so that contact with hazardous parts is possible, the current in these lines is earthed by the vehicle body and - as with a defective household appliance - switched off when 30mA are reached within < 0.2 s. the cutoff time is shortened by a more powerful defect current.

To protect the ballast, a counter in the electronic safety system ensures that a defective lamp can only be switched off 7 times consecutively after a successful ignition, after which the device is cut off. This prevents flutter and flashing. This counter is put out of action when the lamp cutoff time repetition interval is longer than 1.3 s so that temporary non-defect disturbances that result in immediate invisible re-ignition do not cause lamp cutoff.

A warning notice on the lamp plug makes you aware of the fact that the lamp is operated in this system on a higher voltage (you should therefore switch off the lamp before working on this part).

After taking out the lamp, the contact pins are in a practically idle stat (< 34 Volt) after < 0.5 seconds so that there is no immediate danger of electric shock even if the warning is disregarded.

With this safety concept there is no danger to check the ballast with a new bulb. There is a very high probability that the ballast is OK if the ballast can ignite the bulb.

One simple test to check the ballast would be to measure the Nominal current of 1.58A after one minute for the 24V ballast.

11.1.6 Aiming headlights

Headlights must be properly aimed to provide maximum allowable road illumination. Aiming can be performed without opening headlight assembly. Vertical aiming of each module is provided by one adjusting screw that pivots the entire module in the housing for proper alignment (

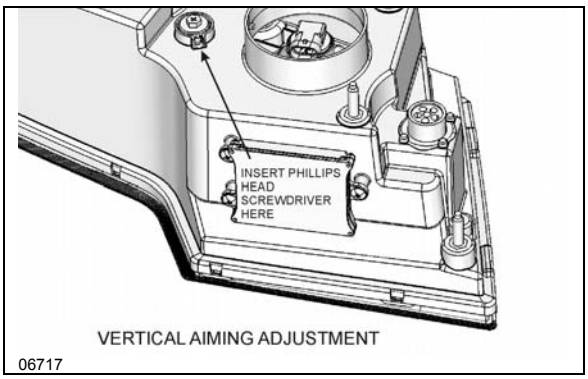

FIGURE 27). There is no adjustment for focus since the module is set for proper focus during manufacturing assembly.

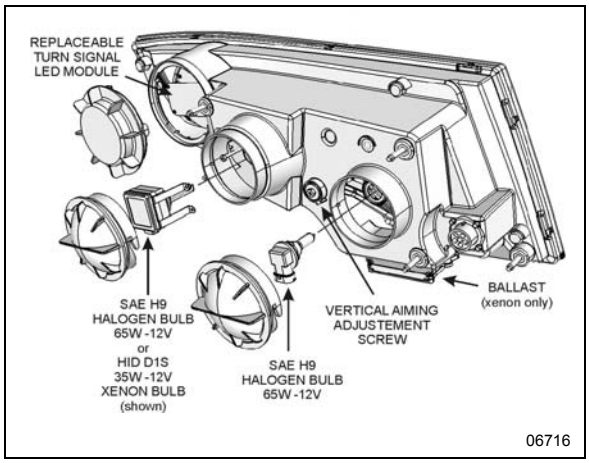

FIGURE 26: HEADLIGHT ASSEMBLY

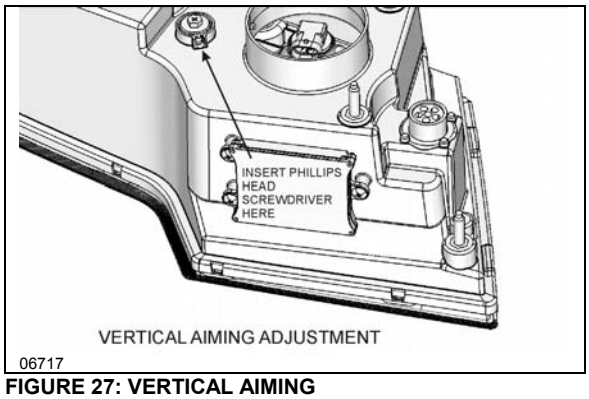

FIGURE 27: VERTICAL AIMING

11.2 STOP, TAIL, DIRECTIONAL, BACK-UP, AND HAZARD WARNING LIGHTS

A combination stoplight, taillight, directional signal light and back-up light assembly is mounted at the rear, on each side of the vehicle. Furthermore, when braking, a high-mounted stoplight will illuminate simultaneously with the stoplights on the sides for increased safety.

The stop and tail lights are combined in the same 6-LED lamp. The directional signal and license plate lights consist of individual LED lights mounted on the engine rear door, and each light is serviced individually as a complete unit. The back-up light sealed unit uses a regular tungsten bulb.

The hazard warning flashing system uses the front, side and rear directional lights simultaneously. This system is energized by a switch on the L.H. dashboard.

11.2.1 Lamp Removal And Replacement

1. Open engine compartment rear door.
2. Unscrew the lamp support retaining screws (2), and then from the outside, remove the lamp and its support.
3. From the outside, install the new lamp with its support then fasten the retaining screws.

11.2.2 High-Mounted Stop Light Removal And Replacement

This vehicle is equipped with a high-mounted stop light (LED). This light is a sealed unit and should be replaced as an assembly in accordance with the following procedure:

1. Unscrew both *"Phillips"* light screws, and then remove the light assembly.
2. Position the new light assembly and install the *"Phillips"* screws.

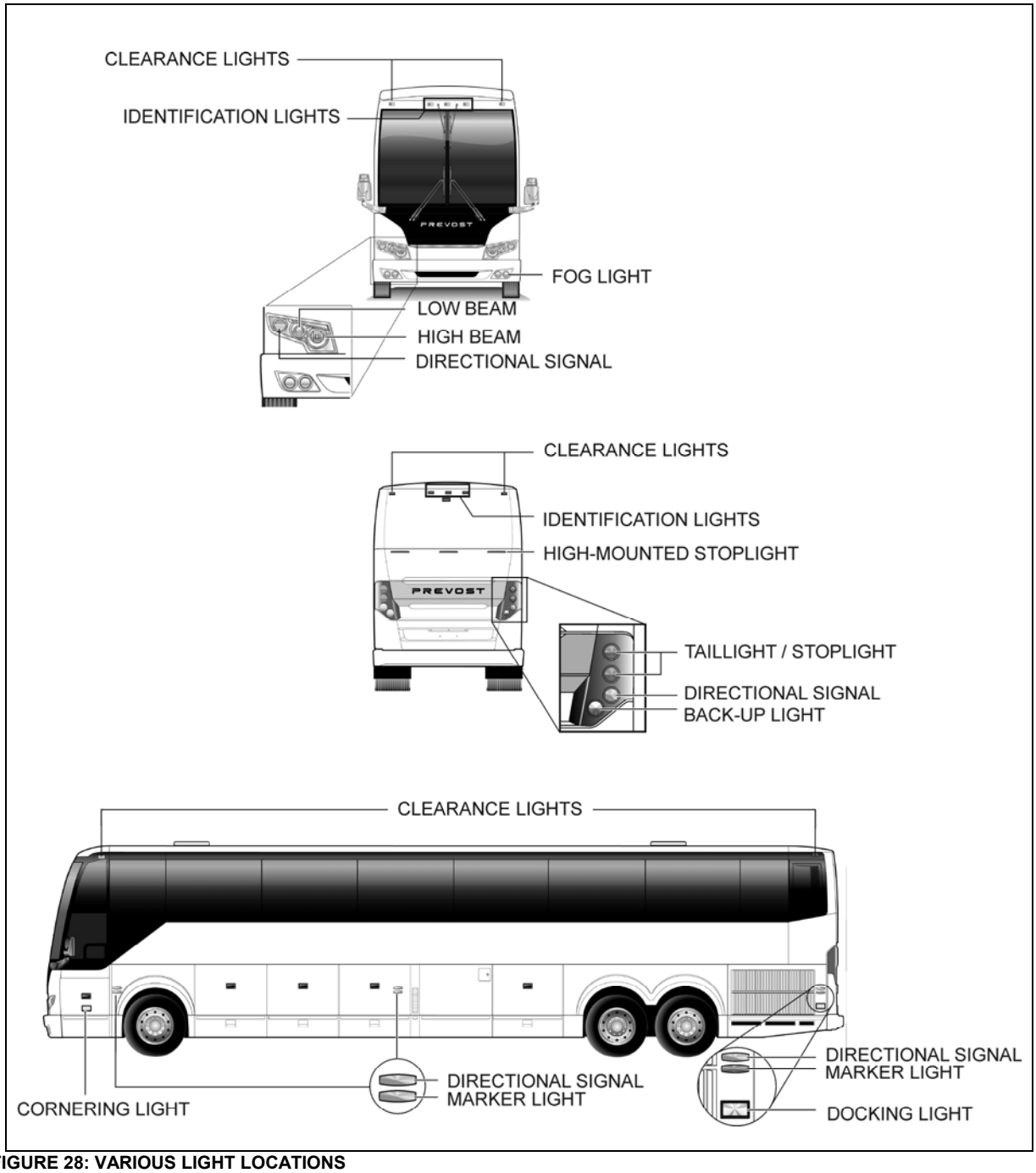

FIGURE 28: VARIOUS LIGHT LOCATIONS

18588_4

11.3 LICENCE PLATE LIGHT

Two LED units are mounted above the rear license plate(s) of vehicle. In case of burn out, the LED unit must be changed according to the following procedure.

1. Pry out the rubber seal with a small screwdriver. Pull on the LED unit and disconnect it.
2. Reconnect new LED unit, place rubber seal, and press on it until it is seated in position.

11.4 CLEARANCE, IDENTIFICATION AND MARKER LIGHTS

The vehicle is equipped with marker, identification and clearance lights (LED). The clearance lights are mounted at each corner of the coach near the top and the identification lights are in the upper center of rear and front sections. The rear clearance and identification lights are red and the front ones are amber.

The amber marker lights are mounted along the sides of vehicle.

11.4.1 Marker Light Removal And Replacement

The side marker light is a sealed unit (LED) and should be replaced as an assembly in accordance with the following procedure:

1. Unscrew both *"Phillips"* light screws, disconnect and remove the light assembly.
2. Connect and position the new light assembly and install the *"Phillips"* screws.

11.4.2 Clearance And Identification Light Removal And Replacement

The clearance and identification lights are sealed units (LED) and should be replaced as an assembly in accordance with the following procedure:

1. Unscrew both "Phillips" light screws, disconnect and remove the light assembly.
2. Connect and position the new light assembly, then install the "Phillips" screws.

11.5 DOCKING AND CORNERING LIGHTS

This vehicle is provided with two halogen sealed-beam units that serve as cornering lights. They are mounted on the vehicle as follows: one is mounted on the front L.H. side service compartment door, while the other is located between the front wheel and the entrance door on the R.H. side. The main function of these lights is to increase lateral visibility when turning a corner. These lights are energized simultaneously with the directional lights. On the V.I.P. model, a dashboard-mounted rocker switch may be actuated to cancel this system in special situations.

Two additional halogen sealed-beam units are installed on rear electrical compartment door (R.H.) and radiator door. These lights are used as docking lights and both will illuminate automatically when reverse range is selected to facilitate back-up or docking procedure.

On the V.I.P. model, these lights do not operate automatically when the reverse range is selected, but by means of a dashboard-mounted rocker switch. When actuated, the docking as well as the cornering lights illuminate. Furthermore, a *"Low docking"* switch, also located on dashboard, allows the use of the docking and cornering lights at a lower intensity when the docking switch is actuated.

11.6 LAMP REMOVAL AND REPLACEMENT

Both docking and cornering sealed-beam units can be changed in accordance with the following procedure:

1. Remove the two "Phillips" screws attaching the retaining ring.
2. Disconnect the light unit connection.
3. Remove the lamp.
4. Position new lamp.
5. Connect and position the light unit.
6. Finally, install the retaining ring and screw.

11.7 FOG LIGHTS

Optional halogen fog lights can be mounted on this vehicle to give the driver better visibility in foggy weather, or to improve the range of vision just ahead of the coach.

11.7.1 Bulb Removal And Replacement

1. Pull on the release handle located in the front electrical and service compartment, near the door lower hinge. The bumper will lower gradually.

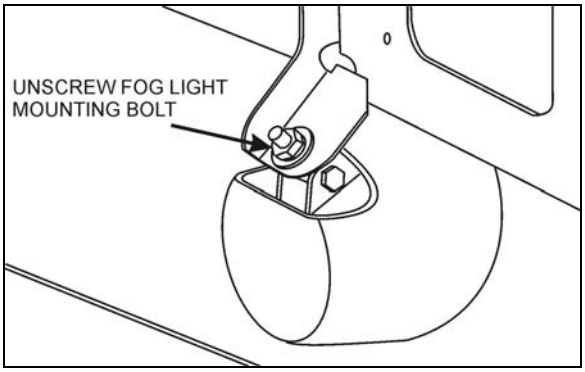

FIGURE 29: FOG LIGHT MOUNTING BOLT

2. From bumper inner side, unscrew the nut fixing the fog light and remove the entire fog light assembly from the bumper.
3. Unscrew the outer ring. Disconnect the light unit connection and remove the bulb.

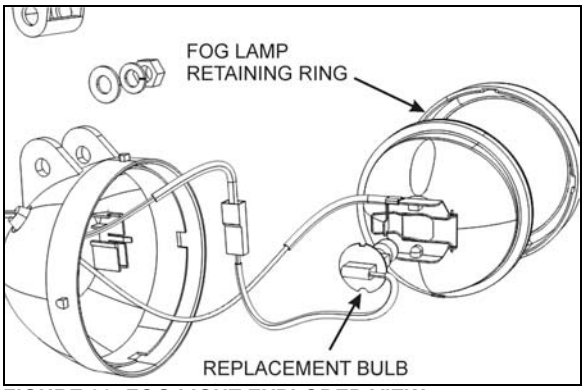

FIGURE 30: FOG LIGHT EXPLODED VIEW

CAUTION

During this step, avoid contacting the bulb with your fingers. This could alter the bulb life.

5. Install the new bulb, reconnect the light unit and replace in its proper position.
6. Reinstall the outer ring, then return the fog light assemble to its proper location.
7. Fasten the fog light mounting nut and securely close the bumper.

12. H3 SERIES INTERIOR LIGHTING

12.1 CONTROL PANEL LIGHTING

The instrument gauges and switches mounted on all control panels are energized whenever the exterior light switch is pushed to the first position. A control dimmer located on the dashboard is used to vary the brightness of the panel gauges, switches and indicator lights.

The gauge lights, panel lights, switch lights and indicator lights have a different bulb arrangement. Thus, the procedure to change a defective bulb can vary according to the application.

12.1.1 Switch Lighting

1. Slightly pull the switch with a defective LED away from the control panel.
2. Disconnect the electric cable from the switch.
3. To install a new switch, reverse the procedure (**FIGURE 31**).

NOTE

Switches are lighted by the use of LED. When lighting on a switch fails, replace defective switch as a unit.

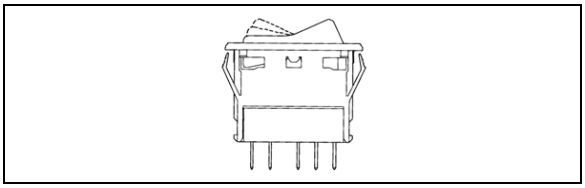

FIGURE 31: SWITCH

12.1.2 Telltale Light Replacement

Telltale module is non-serviceable and must be replaced as a unit.

1. Unscrew and remove the top dashboard panel.
2. Remove the telltale back wire electric connectors.
3. Unscrew and remove the telltale module.
4. To replace the telltale module, reverse the procedure.

12.1.3 Gauge Light Bulb Replacement

1. For any gauge light bulb replacement, the dashboard panel must be removed in order to have access to the rear of gauges.
2. Remove bulb socket from the gauge, turn the defective bulb counterclockwise and pull it out of the gauge.
3. Push a new bulb and socket ASM and turn clockwise to lock in place.
4. Replace the rear dashboard housing.

12.2 STEPWELL LIGHTS

12.2.1 Coach Entrance

The stepwell lights are illuminated when the door opening system is activated (

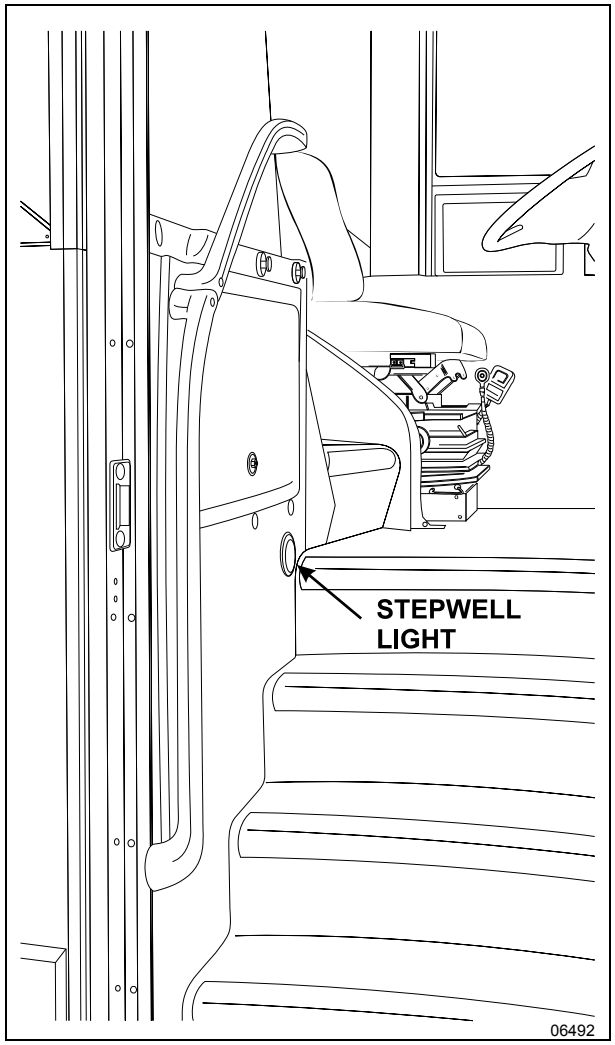

FIGURE 32).

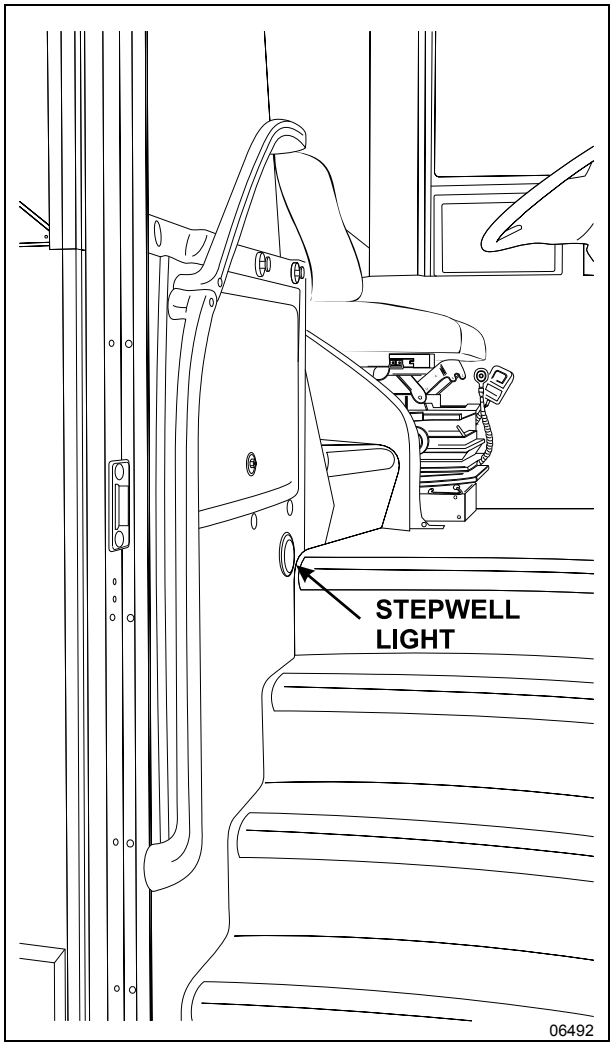

FIGURE 32: COACH ENTRANCE STEPWELL

Light Removal and Replacement

1. Unsnap the lamp outer ring with a flat head screwdriver and remove it.
2. Unfasten the three fixing screws, remove and disconnect LED light assembly.
3. Connect and install the new LED assembly in position.
4. Fasten the three fixing screws and replace the lamp outer ring by snapping it back in place.

12.2.2 VIP Entrance

The stepwell light is illuminated when the door opening system is activated (

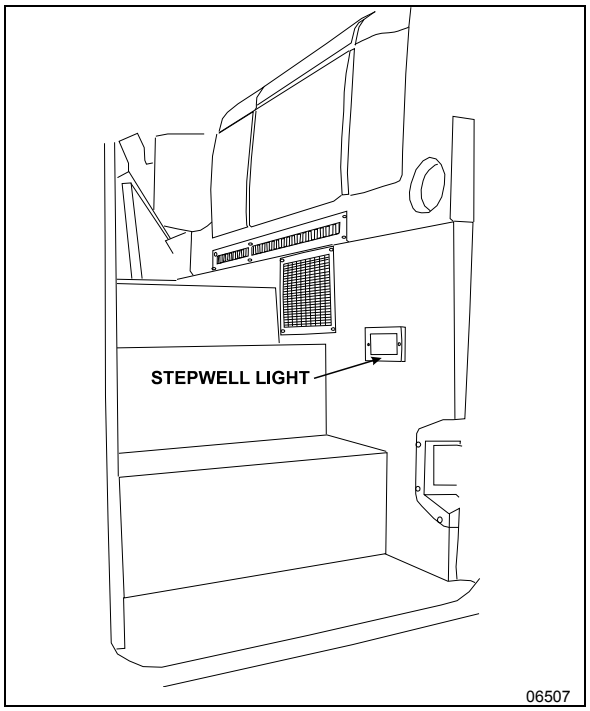

FIGURE 33).

12.2.3 Bulb Removal And Replacement

Proceed as follows to replace defective bulb:

1. Unscrew the two Phillips-head screws retaining the lens to the wall, and remove it.
2. With the light lens removed, pull bulb from the lamp while applying lateral pressure.
3. Install the new bulb into the lamp.
4. Position the light lens and install it.

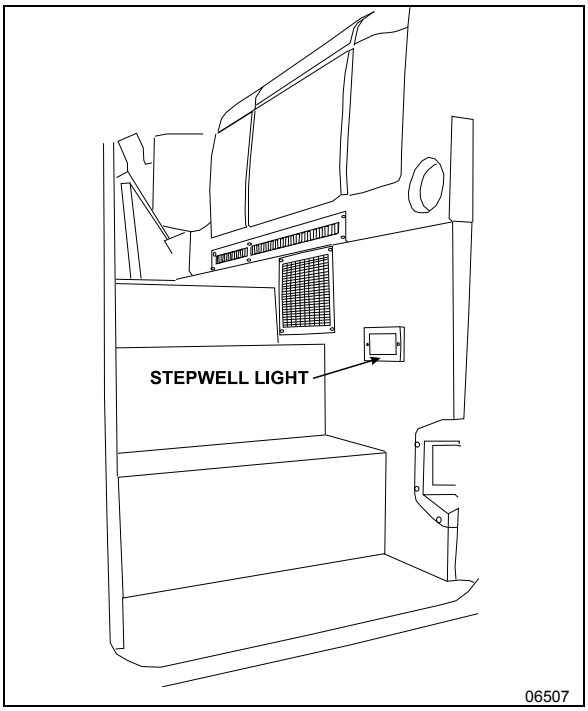

FIGURE 33: VIP ENTRANCE STEPWELL

12.3 LAVATORY NIGHT-LIGHT

The lavatory night-light is illuminated as soon as the ignition switch is set to the *"ON"* position.

12.3.1 Bulb Removal And Replacement

Proceed as follows to replace defective bulb:

1. Unscrew the two Phillips-head screws retaining the lens to the lavatory wall, and remove it.
2. With the light lens removed, pull bulb from the lamp while applying lateral pressure.
3. Install the new bulb into the lamp.
4. Position the light lens and install it.

12.3.2 DRIVER'S AREA LIGHTS

One halogen ceiling light is installed over the stepwell and another one over the driver's area. These lights are frequently used for nighttime operation when passengers board or leave coach.

12.3.3 Bulb Removal And Replacement

1. Unsnap the lamp with a flat head screwdriver and remove it.
2. Pull the defective bulb out of the socket.
3. Install the new bulb by pushing it in position.
4. Replace the lamp by snapping it back in place.

CAUTION

Do not touch halogen bulbs with bare hands as natural oils on skin will shorten bulb life span.

12.4 PASSENGER SECTION LIGHTING

The passenger section of coach is lit by two types of fluorescent tube lamps installed on the parcel racks.

The aisle or indirect lights are located on front of parcel racks, and provide soft, indirect cabin lighting and parcel rack interior lighting. More powerful lighting for general and in-station applications is provided by fluorescent tubes located under the parcel racks, close to the windows. A dual power system is available for this lighting either from the 24-volt vehicle power supply or from a 110-volt outlet supply. In order to save batteries during extended periods of in-station lighting, no current is drawn from the batteries as soon as the 110-volt circuit is connected.

Moreover, adjustable reading lamps are installed under the parcel racks for passenger accommodation.

12.4.1 Fluorescent Tube Replacement

Indirect Fluorescent Light

1. Open the parcel rack access door, if so equipped, unscrew the two Phillips screws (one each end). Let the hinged cover down.
2. Remove fluorescent tube from light socket and install a new fluorescent tube.
3. Lift the hinged cover and replace the two retaining screws (

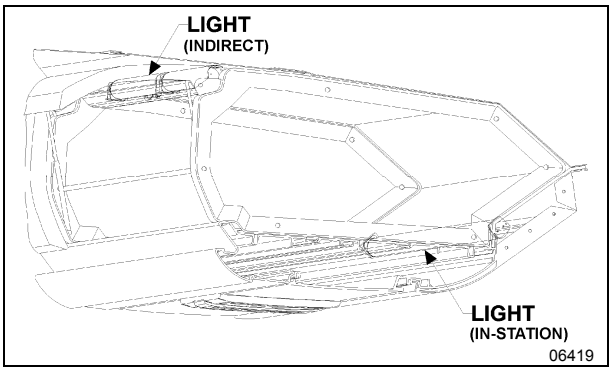

4. **FIGURE 34**).

Parcel Rack Interior Lighting

1. Open the parcel rack access door, if so equipped, unscrew the two Phillips screws (one each end). Pull the hinged cover down.
2. Push on the bulb, turn and then, pull it from the socket.
3. Install a new bulb.
4. Lift the hinged cover and replace the two retaining screws.

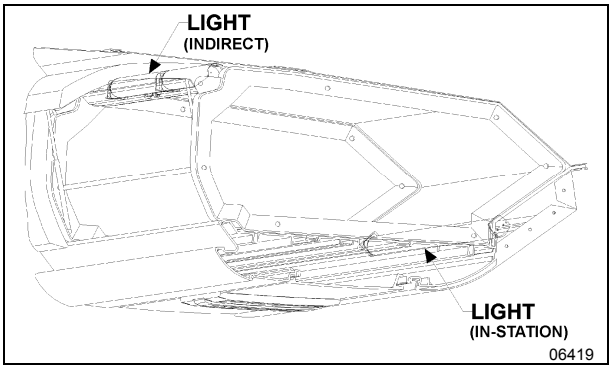

FIGURE 34: PARCEL RACK

12.4.2 Removal And Replacement Of In-Station Fluorescent Tubes

1. Start by pulling out the corner of the lens then delicately peeling it out of its seat.

CAUTION

The lens is fragile. Be very careful when removing and handling.

2. Rotate and pull the fluorescent tube from its sockets.
3. Install a new fluorescent tube, rotating the tube to secure it in the sockets.

4. Replace the screen lens by first inserting one side in the seat, then push the other side in and snap it in place by running it in from one corner to the next.

12.4.3 Removal And Replacement Of Reading Lamp Bulb

1. Engage the tool (#830164) over the lamp and turn one quarter turn counterclockwise. Then, remove the tool slowly.
2. Pull the bulb socket off the reading lamp unit.
3. Push and turn bulb counterclockwise, then pull it out of the socket.
4. Install new bulb in the socket, then push and turn clockwise to lock bulb in position.
5. Push the bulb socket in the reading lamp unit.
6. Position the reading lamp with the tool (#830164), turn one quarter turn clockwise.

12.5 ENGINE COMPARTMENT LIGHTING

Two 24-volts LED module illuminate the engine compartment when the following conditions are met:

1. The engine compartment rear door or curbside door is open.
2. Ignition switch in ON or ACC position.
3. Engine compartment lighting switch on rear engine start panel in ON position.

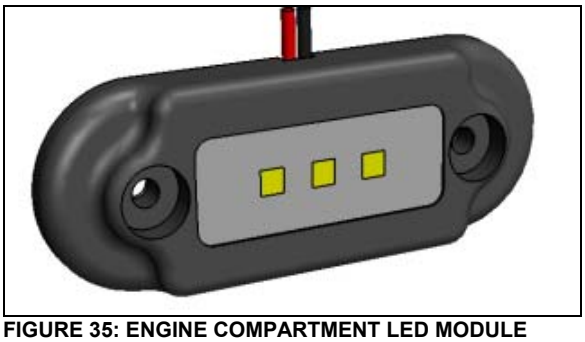

FIGURE 35: ENGINE COMPARTMENT LED MODULE

12.6 LAVATORY LIGHT

The lavatory halogen lights are installed on ceiling. A microswitch, mounted in the door exterior frame, is activated by the door lock mechanism upon locking to energize the circuit. This switch is readily serviced by removing the two Phillips-head screws securing the mounting plate to the door exterior frame.

Proceed as follows to replace the bulb:

1. Unsnap the lamp with a flat head screwdriver and remove it.
2. Pull the defective bulb out of the socket.
3. Install the new bulb by pushing it in position.
4. Replace the lamp by snapping it back in place.

CAUTION

Do not touch halogen bulbs with bare hands as natural oils on skin will shorten bulb life span.

13. LIGHT BULB DATA

Please, refer to your vehicle Parts Manual for selection of replacement light bulbs.

NOTE

Exterior and interior lights can be 12 volts or 24 volts.

14. SPECIFICATIONS

Maintenance Free Battery

Make..... Volvo
Model..... 20359831
Type ..... Maintenance-free
Terminal type ..... Top Stud
Group size..... 31
Volts 12
Load test amperage 290
Reserve capacity (minutes) 195

Cold cranking (in amps)
-At 0°F (-18°C)..... 950 (each battery)

Maximum dimensions (inches/mm)
-Length (including flange) ..... 13.0 / 330
-Width..... 6.7 / 169
-Height (including top posts) ..... 9.3 / 237
-Approximate weight (lbs/kg) ..... 59 / 27

* *Battery tester cable clamps should be between terminal nuts and lead pads of terminals. If not possible, load value should be 210 amperes.*

AGM Battery

Make..... Volvo
Model..... 21258363
Type ..... Absorbed Glass Mat
Terminal type ..... Top Stud
Group size..... 8A31
Volts 12
Load test amperage 400
Reserve capacity (minutes) 200

Cold cranking (in amps)
-At 0°F (-18°C)..... 800 (each battery)

Maximum dimensions (inches/mm)
-Length (including flange) 12.93/328
-Width..... 6.7/169
-Height (including top posts) 9.3/237
-Approximate weight (lbs/kg) 61.7/28

Torque specifications

Battery cable to post ..... 13-15 lb-ft (18-20 Nm)

Alternator

Make..... BOSCH
Series ..... HD 10
Amperes..... 150
Volts 28.4
Output Power ..... 3 Kw
Ground ..... negative
Prevost Number 564593

Battery equalizer standard

Make..... Vanner

Model.....Vann-Guard 70-Series
Amperes ..... 100 amps

Battery equalizer (with PRIME option)

Make..... Vanner
Model.....Vann-bus 80-Series
Amperes ..... 100 amps

Starter

Make.....Mitsubishi Electric Corporation (MELCO)
Type 105P70
Voltage 24
Prevost Number 510752

No-load test
-Volts 23.5
-Max. current draw ..... 125 amperes
-Min. rpm .....3000 rpm

Starter solenoid

Make.....Mitsubishi Electric Corporation (MELCO)
Pull In Voltage .....16 volts max.

ELECTRICAL CONNECTORS PROTECTION

PROCEDURE NO SAV00002E	NOVEMBER 2009 REVISION 02

Kent Sealer	 680324
Sprayed sealer. It is used for structure ground connections. It prevents corrosion and ensures maximum contact. Refer to table for proper use. Apply this product once installation is finished.	
Warning: *It is very important to be in a well ventilated area when applying this product.*	

Nyogel Grease	 3 Oz. tube: 681095 Container 500g: 683409
Grease-type product. It is used to facilitate connectors or terminals insertion. Refer to table for proper use of Nyogel grease. It is preferable to apply Nyogel into the female part of connector. Apply this product as the last assembling operation.	

"Color Guard" black rubber coating	 684013
This product may be applied with a brush. It is used for structure ground connections or other connections that will most likely not be disconnected later on. Apply this product once installation is finished.	
Warning *: Wear goggles and rubber gloves.*	

Vehicle Zoning

X3-MTH

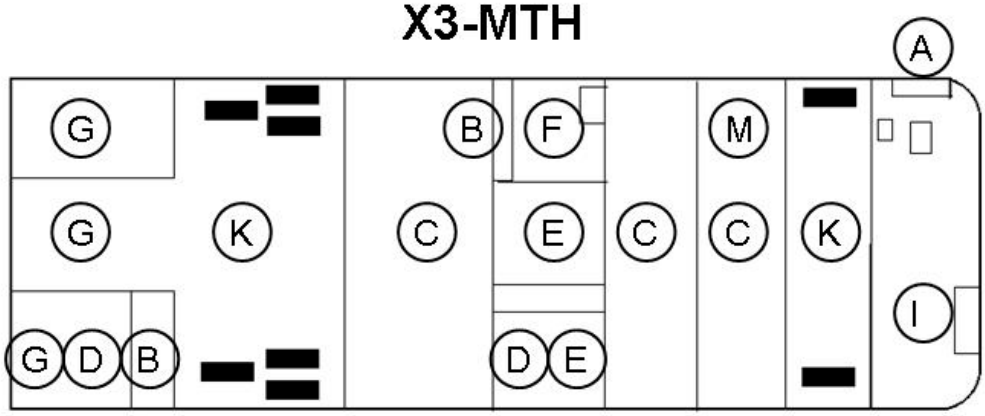

REAR **FRONT**

H3- VIP

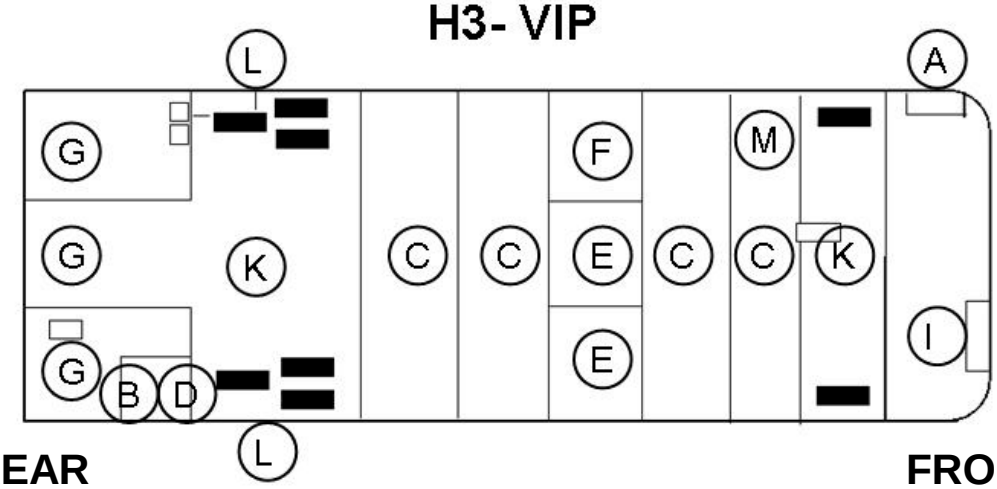

REAR **FRONT**

Electrical Connectors Protection Procedure Table

Zone	Component	Model				Product	Note
		MTH	X3	H3	VIP		
A- Front Elect. Compt	Diode Block	X	X	X	X	Nyogel	Accepted to ease connection
A- Front Elect. Compt	Customer Terminal Block	X	X	X	X	Nothing	
A Front Elect. Compt	Terminal Block Electronic Ground	X	X	X	X	Kent	
A- Front Elect. Compt	Structure Ground	X	X	X	X	Kent	
A- Front Elect. Compt	Electronic Module	X	X	X	X	Nothing	
A- Front Elect. Compt	VEC Power	X	X	X	X	Nothing	
A- Front Elect. Compt	70A Relay	X	X	X	X	Nyogel	Accepted to ease connection
A- Front Elect. Compt	Control Relay	X	X	X	X	Nyogel	Accepted to ease connection
A- Front Elect. Compt	All connectors except those specified in this zone	X	X	X	X	Nothing	
A- Front Service Compt	All connectors except those specified in this zone	X	X	X	X	Nothing	
B- Rear Elect. Compt/panel	Customer Terminal Block	X	X	X	X	Nothing	
B- Rear Elect. Compt/panel	Power Terminal Block		X			Nothing	
B- Rear Elect. Compt/panel	Circuit Breaker		X	X	X	Nothing	
B- Rear Elect. Compt/panel	Circuit Breaker	X				Kent	Surface only
B- Rear Elect. Compt/panel	Volvo Air Heater Fuse			X		Nothing	
B- Rear Elect. Compt/panel	Structure Ground		X	X	X	Kent	
B- Rear Elect. Compt/panel	Electronic Module	X	X	X	X	Nothing	
B- Rear Elect. Compt/panel	VEC Power		X	X	X	Nothing	
B- Rear Elect. Compt/panel	VEC Power	X				Kent	Surface only
B- Rear Elect. Compt/panel	70A Relay	X	X	X	X	Nyogel	Accepted to ease connection
B- Rear Elect. Compt/panel	Master Switch Relay		X	X	X	Nothing	
B- Rear Elect. Compt/panel	Master Switch Relay	X				Kent	Surface only
B- Rear Elect. Compt/panel	Control Relay	X	X	X	X	Nyogel	Accepted to ease connection
B- Rear Elect. Compt/panel	200A Power Relay	X	X	X	X	Nothing	
B- Rear Elect. Compt/panel	Power Relay Stud		X			Nothing	
B- Rear Elect. Compt/panel	All connectors except those specified in this zone	X	X	X	X	Nothing	
B- Rear Elect. Compt/panel	Vanner			X	X	Kent	

Zone	Component	Model				Product	Note
		MTH	X3	H3	VIP		
C- Baggage Compt	Structure Ground	X	X	X	X	Color Guard or Kent	
C- Baggage Compt	Door Switch	X	X	X	X	Nyogel	Accepted to ease connection
C- Baggage Compt	Door lock Actuator Module (switch and solenoid)	X	X	X	X	Nyogel	Accepted to ease connection
C- Baggage Compt	Electronic Module	X	X	X	X	Nothing	
C- Baggage Compt	Slide-out Motor	X			X	Nyogel	Accepted to ease connection
C- Baggage Compt	WCL Junction Panel		X	X		Nothing	
C- Baggage Compt	120V Inverter Connector	X	X	X	X	Nothing	
C- Baggage Compt	Stud inverter		X	X		Color Guard or Kent	
C- Baggage Compt	WCL Remote Control		X	X		Nyogel	Accepted to ease connection
C- Baggage Compt	All connectors except those specified in this zone	X	X	X	X	Nothing	
D- Battery Compt	Battery terminals	X	X	X	X	Nyogel	
D- Battery Compt	Structure Ground	X	X			Color Guard or Kent	
D- Battery Compt	Electronic Module	X	X	X	X	Nothing	
D- Battery Compt	All connectors except those specified in this zone	X	X	X	X	Nothing	
D- Battery Compt	Battery Equalizer	X	X			Kent	
E- Condenser Compt	Fuel sender	X	X	X	X	Kent	
E- Condenser Compt	Structure Ground	X	X	X	X	Color Guard or Kent	
E- Condenser Compt	Door Switch	X	X	X	X	Nyogel	Accepted to ease connection
E- Condenser Compt	Condenser Motor	X	X	X	X	Nothing	
F- Evaporator Compt	Diode Block	X		X	X	Nyogel	Accepted to ease connection
F- Evaporator Compt	Structure Ground	X	X	X	X	Color Guard or Kent	
F- Evaporator Compt	Electronic Module	X		X	X	Nothing	
F- Evaporator Compt	Evaporator Motor	X	X	X	X	Color Guard or Kent	
F- Evaporator Compt	200A Power Relay	X		X	X	Nothing	
F- Evaporator Compt	All connectors except those specified in this zone	X		X	X	Nothing	

Zone	Component	Model				Product	Note
		MTH	X3	H3	VIP		
G- Engine Compt	120A Alternator	X	X	X	X	Color Guard	
G- Engine Compt	Booster Block (+)		X	X	X	Color Guard	
G- Engine Compt	Starter Terminal	X	X	X	X	Color Guard	
G- Engine Compt	Volvo Air Element Terminal	X	X	X	X	Color Guard	
G- Engine Compt	Customer Terminal Block	X				Nothing	
G- Engine Compt	Power Terminal Block		X			Color Guard	
G- Engine Compt	Breaker	X				Kent	
G- Engine Compt	Air Heater Fuse & Relay	X	X			Nyogel	Accepted here
G- Engine Compt	Engine Ground	X	X	X	X	Color Guard	
G- Engine Compt	Structure Ground	X	X	X	X	Color Guard	
G- Engine Compt	VEC Power	X				Kent	
G- Engine Compt	Master Switch Relay	X				Kent	
G- Engine Compt	Starter Relay	X	X			Color Guard	
G- Engine Compt	All connectors except those specified in this zone	X	X	X	X	Nothing	
H- Vehicle Exterior	ABS Sensor	X	X	X	X	Nothing	
H- Vehicle Exterior	Docking & Cornering Lamps	X	X	X	X	Nyogel	Accepted to ease connection
H- Vehicle Exterior	Marker Light	X	X	X	X	Nothing	
H- Vehicle Exterior	Mirror	X	X	X	X	Nothing	
H- Vehicle Exterior	Light Module	X	X	X	X	Nothing	
H- Vehicle Exterior	Stop light, Backup light, Directional Signal Light	X	X	X	X	Nothing	
I- Vehicle Interior	Diode Block	X	X	X	X	Nyogel	Accepted to ease connection
I- Vehicle Interior	Junction Block		X	X		Nothing	
I- Vehicle Interior	A3 & A4 Transmission Retarder Hand lever	X	X	X	X	Nyogel	Accepted to ease connection
I- Vehicle Interior	C258 & C259 Multi-function Lever Connector	X	X	X	X	Nyogel	Accepted to ease connection
I- Vehicle Interior	Audio - video Connection		X	X		Nothing	
I- Vehicle Interior	Defrost Compt Ground	X	X	X	X	Kent	
I- Vehicle Interior	Video Plate Direct Ground		X	X		Nothing	
I- Vehicle Interior	Structure Ground		X	X		Kent	
I- Vehicle Interior	Terminal Block Ground		X	X		Nothing	

Zone	Component	Model				Product	Note
		MTH	X3	H3	VIP		
I- Vehicle Interior	Dashboard Switch	X	X	X	X	Nothing	
I- Vehicle Interior	Electronic Module	X	X	X	X	Nothing	
I- Vehicle Interior	Slide-out Motor	X			X	Nyogel	Accepted to ease connection
I- Vehicle Interior	Wiper Motor	X	X	X	X	Nyogel	Accepted to ease connection
I- Vehicle Interior	200A Power Relay	X	X	X	X	Nothing	
I- Vehicle Interior	70A Relay	X	X	X	X	Nyogel	Accepted to ease connection
I- Vehicle Interior	Control Relay	X	X	X	X	Nyogel	Accepted to ease connection
I- Vehicle Interior	All connectors except those specified in this zone	X	X	X	X	Nothing	
I- Vehicle Interior	All components except those specified in this zone	X	X	X	X	Nothing	
K- Front & Rear Wheelhousing	All connectors except those specified in this zone	X	X	X	X	Nothing	
K- Front & Rear Wheelhousing	All components except those specified in this zone	X	X	X	X	Nothing	
L- Compartment above rear wheelhousing	All connectors except those specified in this zone			X	X	Nothing	
L- Compartment above rear wheelhousing	All components except those specified in this zone			X	X	Nothing	
M- Slide-out Panel	All connectors except those specified in this zone	X			X	Nothing	
M- Slide-out Panel	All components except those specified in this zone	X			X	Nothing	

MAINTENANCE INFORMATION

MI15-24

DATE : MAY 2015	SECTION: 06 - Electrical	
SUBJECT : **POWER CABLES INSPECTION GUIDELINES**		

APPLICATION

Model	VIN
All Prevost models	

DESCRIPTION

It is important to carry out a regular inspection of the vehicle power cables. Power cables in poor condition can be the cause of failures and serious damages in the engine compartment.

Please note that some images in this document may represent arrangements different from those found on vehicles of former generations. However, inspection criteria and points to check presented in this document remain applicable in essence for all models of Prevost vehicles.

POWER CABLES MAINTENANCE SCHEDULE	
DESCRIPTION	**INTERVAL**
Perform power cables inspection	Every 3 months

POWER CABLES

– The power cables are those through which flow the highest currents. These cables are those with the largest electrical conductor diameters on the vehicle.

– The power cables are 1/0, 2/0, 3/0 wire gauges respectively Ø0.325in, Ø0.365in, Ø0.409in.

Note: not to be confused with the 1, 2, 3 wire gauges that are actually smaller.

– There are power cables at the following locations:

- On the **alternators positive (+) stud terminal** and from there, up to Bussman junction block in the electrical compartment (Figure 1, Figure 2, Figure 3).

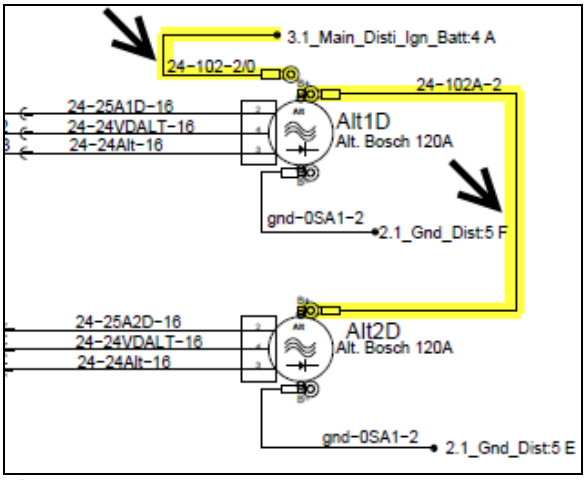

Figure 1

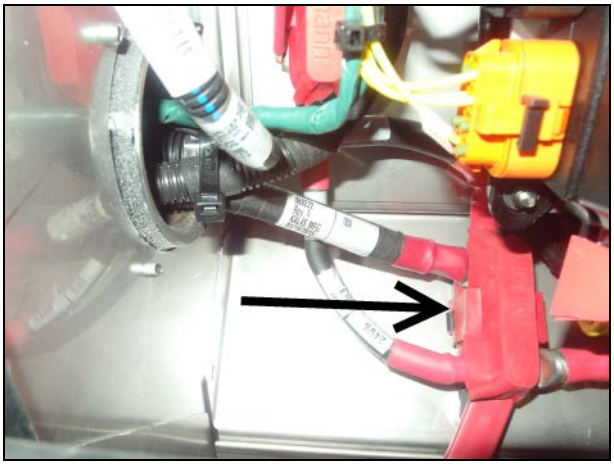

Figure 2: Bussman Junction Block - X3 Series.

Figure 3: Bussman Junction Block - H3 Series.

- On the **starter positive (+) stud terminals** and from there, up to Bussman junction block in the electrical compartment (Figure 4, Figure 5).

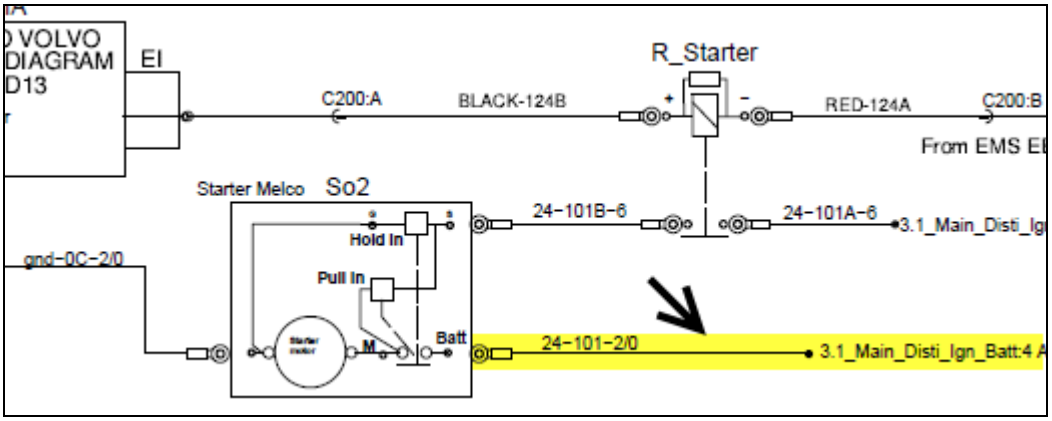

Figure 4

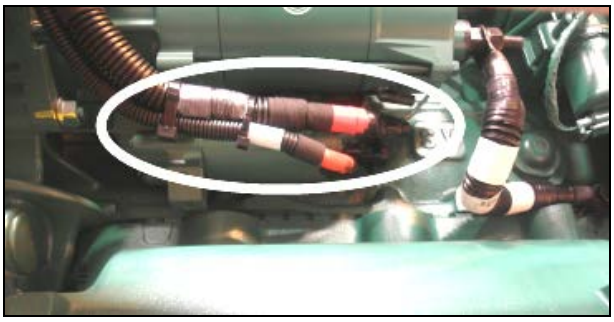

Figure 5: starter cables

- In the electrical compartment, **<u>connected to Bussman junction block</u>** (Figure 6).

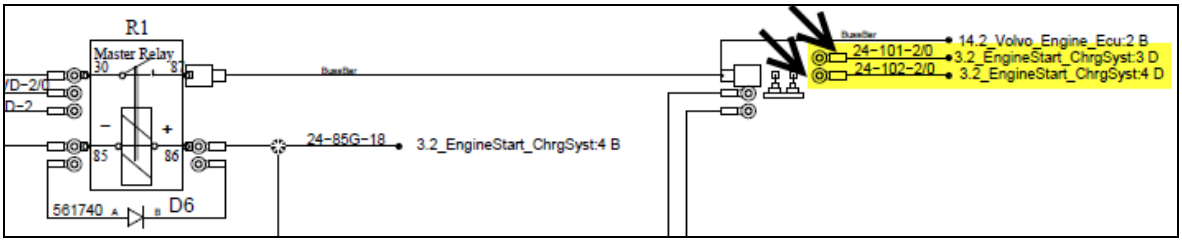

Figure 6

- In the **battery compartment** between **battery no2 and master relay R1** (Figure 7).

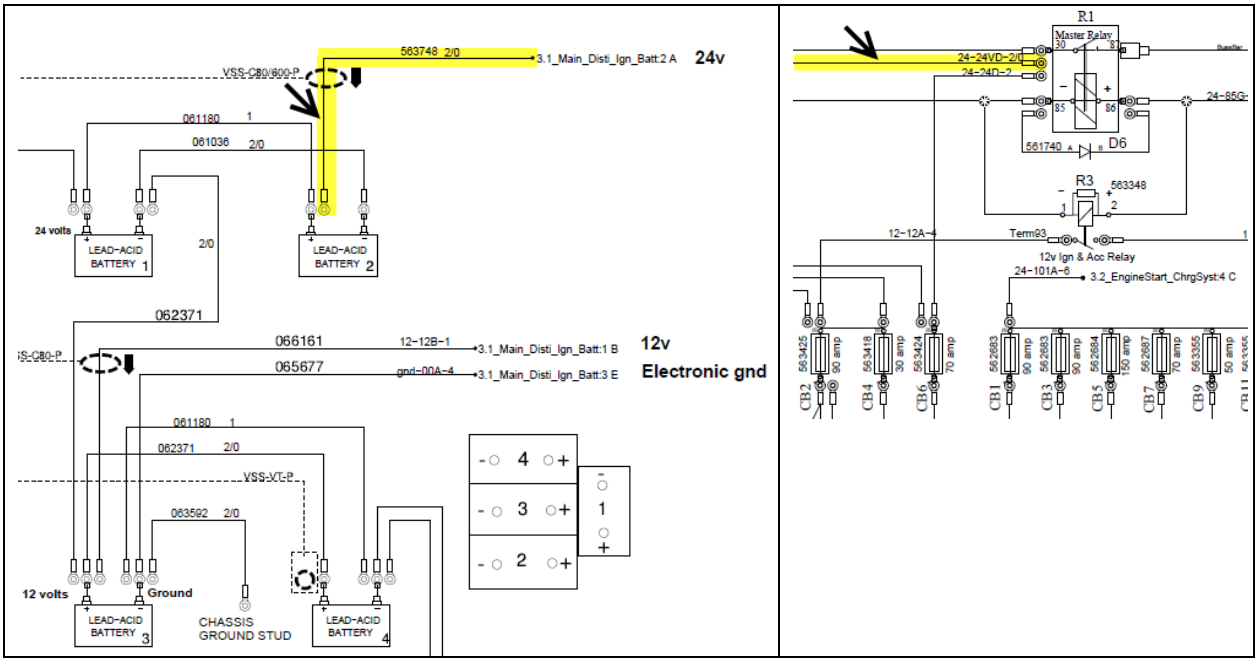

Figure 7

- Between **Bussman junction block** and **main circuit breakers' bus bar** (Figure 8).

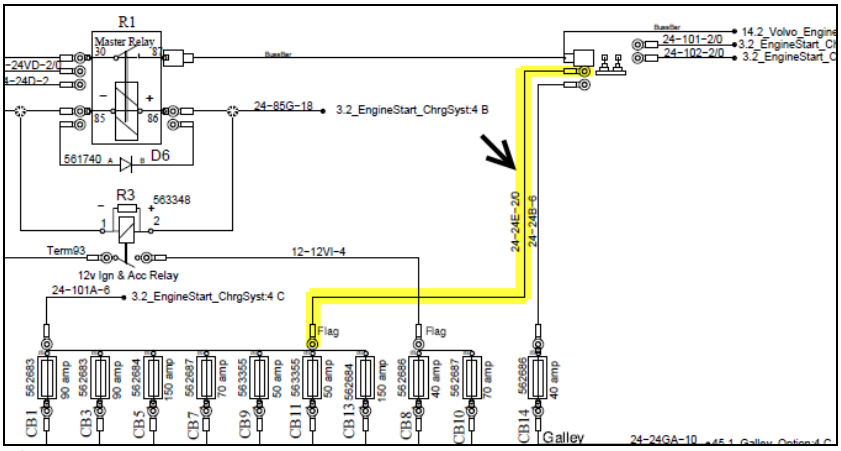

Figure 8

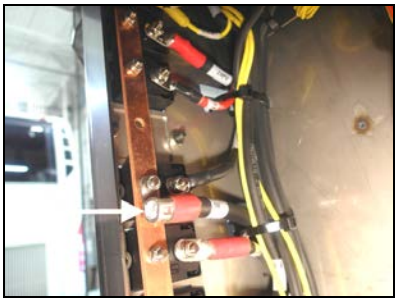

Figure 9: Power cable on main circuit breakers' bus bar.

PROCEDURE

DANGER

Park vehicle safely, apply parking brake, stop engine. Prior to working on the vehicle, set the ignition switch to the OFF position and trip the main circuit breakers equipped with a trip button. On Commuter type vehicles, set the battery master switch (master cut-out) to the OFF position.

POWER CABLES GENERAL INSPECTION CRITERIA

1. **Make sure that the power cables are properly secured with appropriate fasteners so that they do not move. Movement of the cables can cause wear of the extruded protective sheath, strains on stud terminals and ring cable lugs.**

2. **Ensure that the power cables do not rub on other cables or other components.**

3. **Make sure ring cable lugs are securely attached to the stud terminals, that the retaining nut is tightened. Also, make sure that cable lug crimping holds firmly on copper conductor.**

OTHER THINGS TO CHECK

- Check for damages caused by electric arcs with loss of material along the copper conductor.
- Check for damaged cable extruded sheath and having lost its insulating properties.
- Bosch T1 alternator: ensure that the rubber grommets at the rear cap of the alternator are present.
- P-clamp type cable clamps must be suitable for cable diameter. The cable must remain in the P-clamp without moving or rubbing, thus oversized P-clamps are not allowed. Inspect the corrugated protective sheath passing through the P-clamp for signs of wear.
- At certain locations, power cables are protected by a corrugated protective sheath and should remain as such.

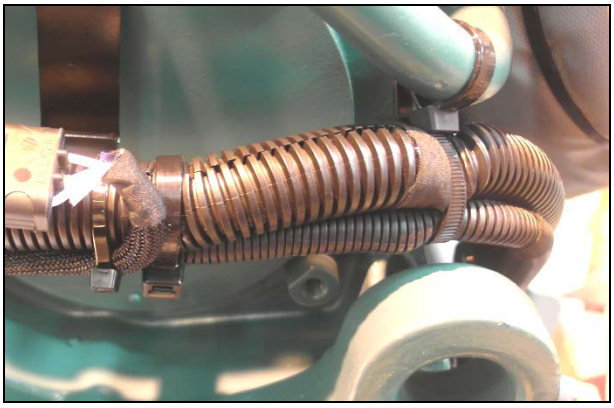

Figure 10: starter cables in a corrugated protective sheath.

- Ensure that the power cables do not rub on bolt heads or sharp metal edges that can cut or wear the cable extruded sheath.
- For power cables passing through a corrugated protective sheath, it is recommended to apply two layers of fabric tape every 3 to 6 inches minimum to prevent the cable from coming out of the

corrugated protective sheath (Figure 11). The ends of the corrugated protective sheath should be covered with fabric tape (Figure 12).

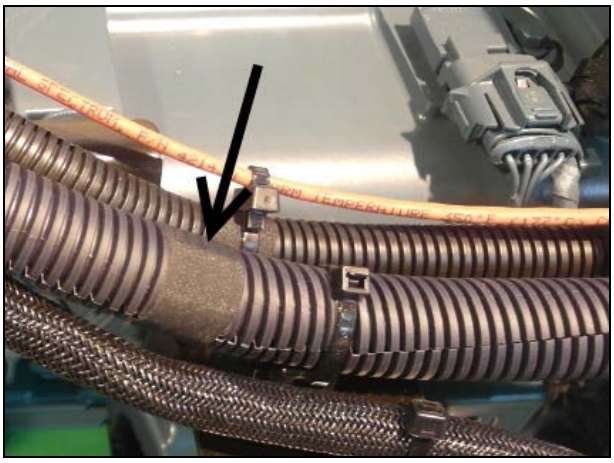

Figure 11: Two layers of fabric tape applied every 3 to 6 inches to prevent the cable from coming out of the corrugated protective sheath.

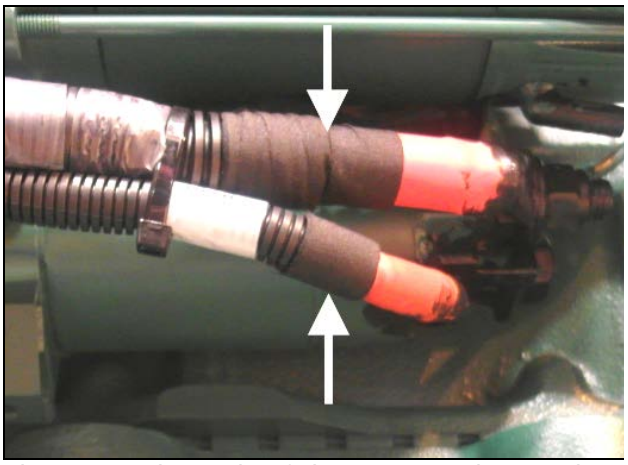

Figure 12: The ends of the corrugated protective sheath should be covered with fabric tape.

- Stud terminal nuts properly tightened. Use a nut with nylon insert to replace a similar nut where applicable. Protect ring cable lugs against tightening force by placing a flat washer between nut and ring cable lug.

When necessary, use fasteners that secure cables while preventing rubbing

RING CABLE LUGS

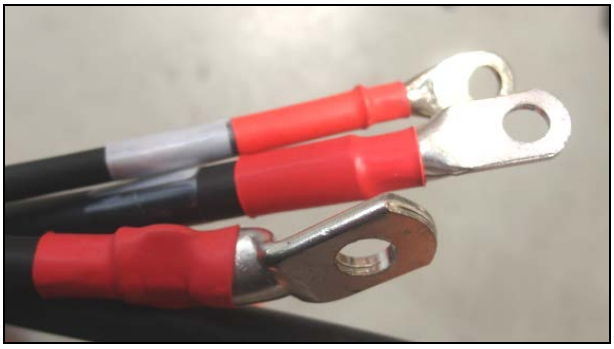

Figure 13: Cable lugs must be closed type, crimped or welded.

- Ring cable lugs should not be distorted.
- Ring cable lugs should not suffer strains that can deform.

- Ring cable lugs must be installed with smooth washers and nuts to prevent damage to the cable lug when tightening.

Figure 14: Power cable shouldn't be bent just next to the cable lug. Angled cable lugs are used to avoid mechanical stress.

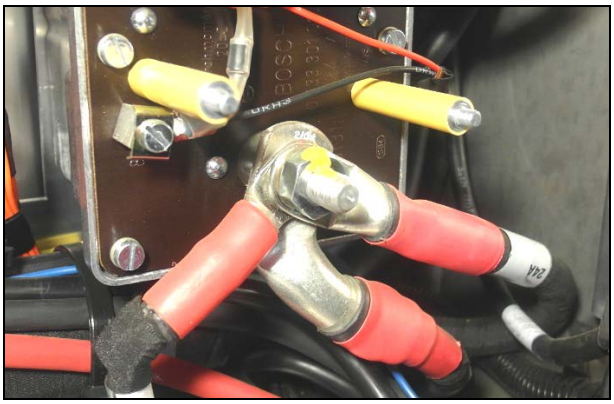

Figure 15: When several terminals are connected on a single stud terminal, the largest cable lug must be placed first, followed by the second larger and so on. Cable lugs should be distributed around the stud terminal in a way that no cable lug is distorted when tightening the nut.

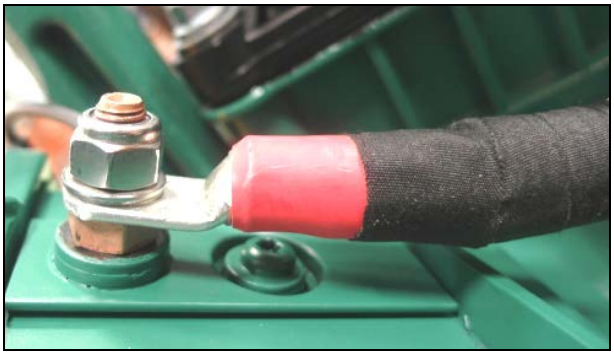

Figure 16: No exposed or broken copper strands.

- A shrink tubing (or fabric tape) should cover the copper strands.
- Ensure that the power cables and ground wire are not stretched tight.
- Ensure that the cable lugs are still properly crimped on the copper conductor, that the conductor strands are not broken so that the power cable retain its capacity and ensure unrestricted current flow.

BATTERY CABLES

- Battery interconnection cables must be checked too :

– Ensure the cables are properly fastened to battery posts and that the cables are in good condition (consult battery manufacturer documentation for appropriate tightening torque).

– No corroded or cut copper strands. No apparent copper strands. Protective sheath in good condition, no cuts, no rubbing against metal edges.

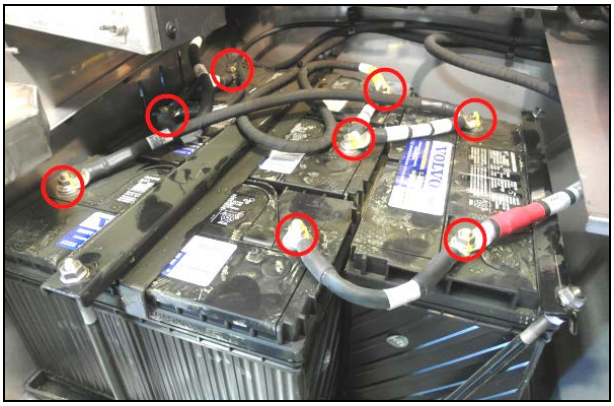

Figure 17: battery bank

STEEL P-CLAMPS

Figure 18: P-clamps are no longer used to secure power cables, but they can nevertheless be found on coaches of older generations. The piece of rubber that protects cable against the P-clamp steel loop must absolutely be in place. Replace any P-clamps where the rubber piece is missing, broken or likely to separate from the steel loop.

NOTE
Unlike steel P-clamps, plastic clamps have the advantage of being not conductive. A good practice would be to replace P-clamps ***securing power cables*** *with appropriate nylon cable ties like the following:* **#507664 CABLE TIE, DOUBLE LOOP** **#509491 CABLE TIE, WIDE**

Figure 19: P-clamp with appropriate diameter prevents the power cable or corrugated protective sheath from moving and rubbing inside the clamp.

ALTERNATORS

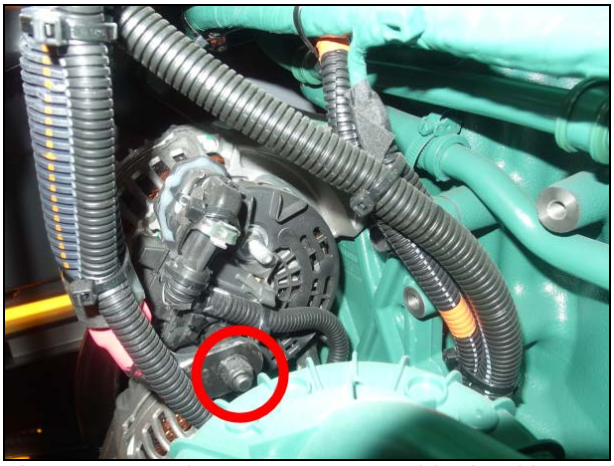

Figure 20: Make sure power cables/positive cables (+) are properly connected to alternator, that stud terminal nuts are properly tightened.

TERMINAL NUT PRESCRIBED TORQUE

Bosch HD10
- B1(+) terminal: 10 lbf-ft
- ground: 6 lbf-ft

Bosch T1
- D+: 21-28 lbf-in
- B+, B-: 88-115 lbf-in
- W: 36-48 lbf-in

Delco 50DN
- DC Output: 30-35 lbf-ft
- F1, F2, Relay: 6 lbf-ft

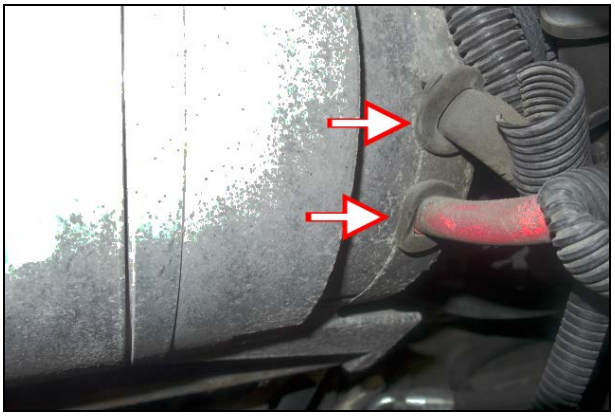

Figure 21: Bosch T1 alternator with the two required rubber grommets. Alternator cables connected to the alternator stud terminals must be protected against metal edges with rubber grommets.

Figure 22: Fire in engine compartment caused by rubbing of power cable against metal edge of Bosch T1 alternator rear cover. Lower rubber grommet was missing when fire occured. Evidence of electrical arc can be seen.

CORROSION PROTECTION

- Power cable connections on alternators, starter and ground connections exposed to water, dust, etc. should be protected against corrosion with Loctite Color Guard rubber coating (**Figure 23**) (Prevost p/n: 684013).

Figure 23: Loctite Color Guard.

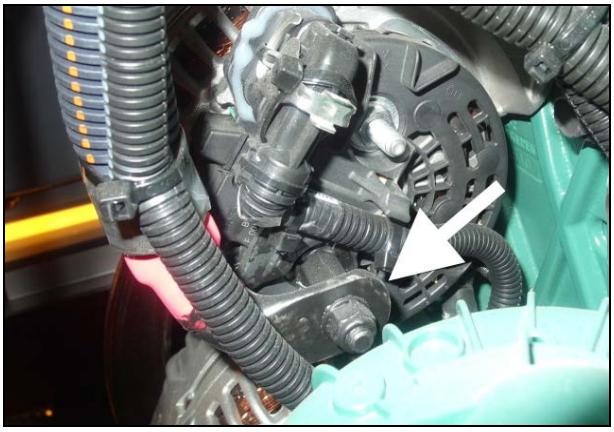

Figure 24: Upper alternator power cable lug protected with Color Guard rubber coating.

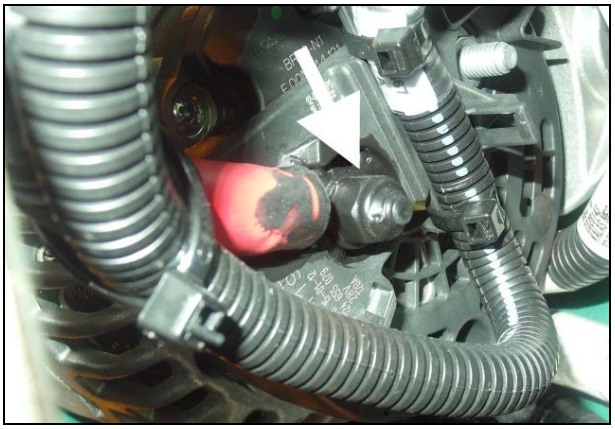

Figure 25: Lower alternator power cable lug protected with Color Guard rubber coating.

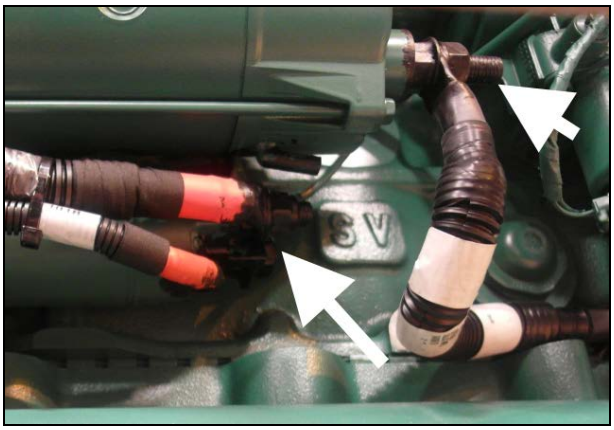

Figure 26: Starter power cable and ground cable lugs protected with Color Guard rubber coating.

PARTS / WASTE DISPOSAL

Discard according to applicable environmental regulations (Municipal/State[Prov.]/ Federal)

Access all our Service Bulletins on https://secureus5.volvo.com/technicalpublications/en/pub.asp
Or scan the QR-Code with your smart phone.

*E-mail us at **technicalpublications_prev@volvo.com** and type "ADD" in the subject to receive our warranty bulletins by e-mail.*

PREVOST

MAINTENANCE INFORMATION

MI16-17

DATE :	FEBRUARY 2016	**SECTION:**	06 - Electrical
SUBJECT :	**BOSCH HD10 ALTERNATOR REMOVAL AND INSTALLATION**		

Please, get the latest revision of Maintenance Information MI16-17 on Prevost Technical Publications web site:

https://techpub.prevostcar.com/en/

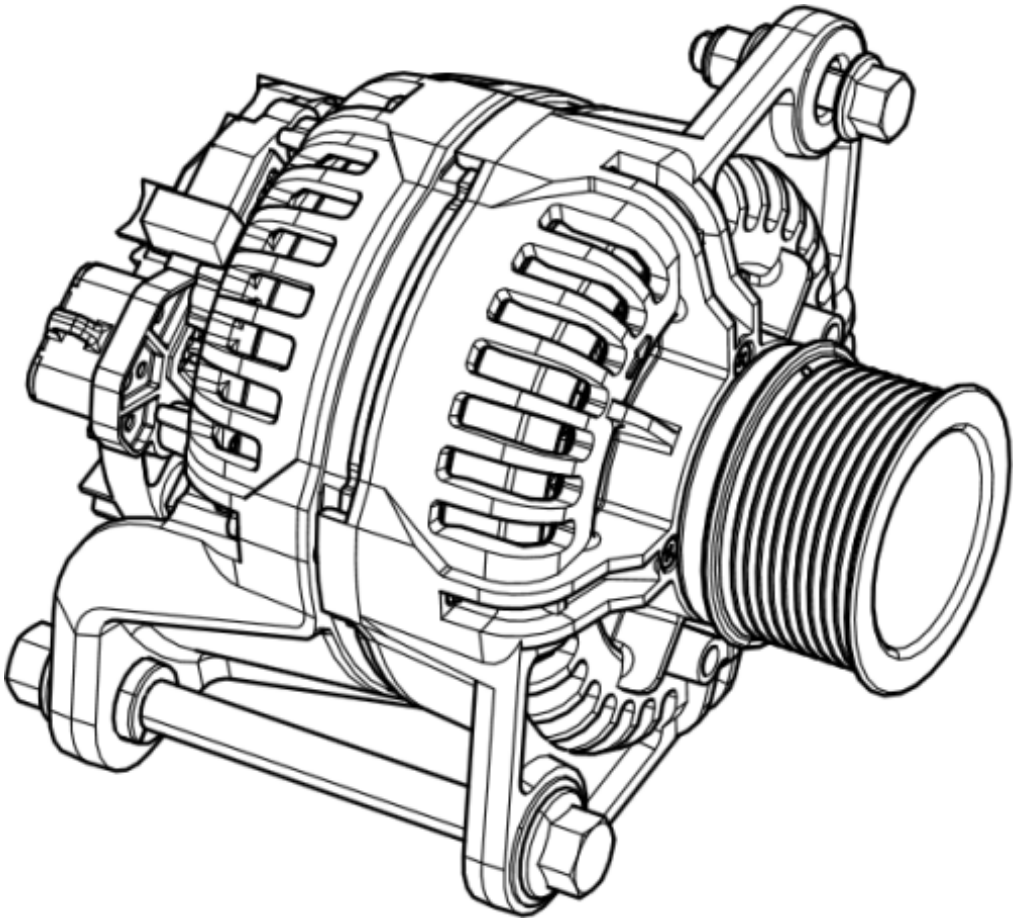

CONTENTS

SECTION CHANGE LOG 4

1. TORQUE TABLES 5

1.1 ALTERNATORS AND SURROUNDING COMPONENTS 5
1.2 ELECTRICAL CONNECTIONS – BATTERIES, MISCELLANEOUS 7

2. GENERAL DESCRIPTION 11

2.1 WIRING DIAGRAMS 11
2.1.1 Using Wiring Diagrams 11
2.2 TESTING CIRCUITS 12
2.3 WIRE SIZES AND COLORS 12
2.4 WIRE IDENTIFICATION 12
2.5 SPARE WIRES 14
2.6 CIRCUIT BREAKERS 14
2.6.1 X3 coach main circuit breakers 14
2.6.2 X3 VIP main circuit breakers 14
2.6.3 VECR/VECF breakers 15
2.6.4 Electric Cooling fan circuit breakers 15
2.7 COOLING FAN CONNECTIONS 15
2.8 MULTIPLEX FUSES 16
2.9 ELECTRONIC GROUND 16
2.10 RELAYS 17
2.11 PRECAUTIONS 17
2.12 ELECTRONIC MODULES CONNECTOR PIN-OUT 18

3. TROUBLESHOOTING AND TESTING THE MULTIPLEX VEHICLES 21

3.1 PROBING VOLTAGE ON THE MULTIPLEX CIRCUITS 21
3.2 DL0 (BBUS MUX) NETWORK 21
3.2.1 DL0 (BBUS MUX) Connection On The Telltale Panel And The Hvac Control Unit 21
3.2.2 Spare DL0 (BBUS MUX) 21
3.3 ELECTRICAL SYSTEM DIAGNOSTIC 21
3.4 MULTIPLEX INPUT TEST MODE 22
3.5 MOTOR TEST SEQUENCE 23
3.5.1 Test Sequence – Coaches only 24
3.5.2 Test Sequence – VIP With Central HVAC System 25
3.5.3 Test Sequence – VIP With Small HVAC System 26
3.6 FORCED ACTIVATION OF THE COOLING FANS 26
3.7 DL0 (BBUS MUX) NETWORK LAYOUT AND TROUBLESHOOTING 28
3.8 TROUBLESHOOTING 33
3.9 DRIVER INFORMATION DISPLAY LIMP-HOME MODE 40
3.10 ESSENTIAL FUNCTIONS TO OPERATE THE VEHICLE 40
3.10.1 Available Functions 40
3.11 LOWER PRIORITY MODULES FOR BREAKDOWN SERVICE 40
3.12 MULTIPLEX MODULES 40
3.12.1 MCM 40
3.12.2 I/O-EA 40
3.12.3 I/O-EB 41
3.13 MULTIPLEX MODULES REPLACEMENT 41
3.13.1 Replacing I/O-EA Or I/O-EB Modules 41
3.13.2 Replacing the MCM Module 41
3.13.3 Uploading the vehicle specific multiplex program into the MCM 41

4. ELECTRICAL COMPARTMENTS 42

4.1 MAINTENANCE 44
4.2 BATTERY INSTALLATION & REAR JUNCTION BOX 44
4.3 REAR JUNCTION BOX (RJB) 44
4.4 FRONT ELECTRICAL AND SERVICE COMPARTMENT (FJB) 47
4.5 A/C MODULE 49
4.6 ENGINE REAR START PANEL 49
4.7 ENTRANCE DOOR & WIPER CONTROL MODULES 49
4.8 PARCEL RACK MODULE 49

5. BATTERIES 50

5.1 BATTERY INSTALLATION 50
5.2 AGM BATTERIES 52
5.3 BATTERY DISCHARGE PROTECTION 52
5.4 MAIN ELECTRICAL SHUT-OFF SWITCH 52
5.5 BATTERY REMOVAL AND INSTALLATION 53
5.6 BATTERY RATING 56
5.7 BATTERY TESTING 56
5.7.1 Visual Inspection 56
5.7.2 Removing Surface Charge 56
5.7.3 Load Test 56
5.8 BATTERY CHARGING 57
5.8.1 Battery Charging Guide 58
5.8.2 Emergency Jump Starting With Auxiliary (Booster) Battery. 58
5.9 AGM BATTERY CHARGING PRECAUTIONS 60
5.10 BATTERY EQUALIZATION AND AGM BATTERIES 60
5.11 CLEANING AND INSPECTION 60
5.12 COMMON CAUSES OF BATTERY FAILURE 60
5.13 TROUBLESHOOTING 61
5.14 "BATTERY VOLTAGE WARNING" PICTOGRAM 61
5.14.1 Voltage Gauge Definitions 61
5.14.2 BATTERY WARNING PICTOGRAM MAY APPEAR AS A REMINDER 62

6. BATTERY EQUALIZER 62

7. PRIME ENERGY MANAGEMENT SYSTEM 62

7.1 COMPONENTS 62
7.1.1 Vanner 80 Series Battery Equalizer Fault Codes 64
7.2 DID DISPLAY 65

8. BOSCH ALTERNATORS 65

8.1 IDENTIFYING THE DEFECTIVE ALTERNATOR 65
8.1.1 Alternator identification 65
8.2 ALTERNATOR DRIVE BELT 66
8.2.1 Removal and installation 66
8.2.2 Adjustment 66

9. STARTER 66

10. ENGINE BLOCK HEATER 67

10.1 MAINTENANCE 67

11. X3 SERIES EXTERIOR LIGHTING 67

11.1 HEADLIGHTS....67
11.1.1 Headlight Beam Toggle Switch....67
11.1.2 Maintenance....68
11.1.3 Headlight Adjustment....68
11.1.4 Sealed-Beam Unit....69
11.1.5 Front Turn Signal....70
11.1.6 Optional Xenon Headlamp....70
11.2 STOP, TAIL, DIRECTIONAL, BACK-UP, AND HAZARD WARNING LIGHTS....71
11.2.1 Lamp Removal and Replacement....72
11.2.2 Center Stoplights and Cyclops Light Removal and Replacement....72
11.3 LICENSE PLATE LIGHT....72
11.4 CLEARANCE, IDENTIFICATION AND MARKER LIGHTS....72
11.4.1 Clearance and Identification Light Removal and Replacement....73
11.5 FOG LIGHTS....73
11.5.1 Bulb Removal and Replacement....73

12. X3 SERIES INTERIOR LIGHTING EQUIPMENT....73

12.1 CONTROL PANEL LIGHTING....73
12.1.1 Switch Lighting....73
12.1.2 Telltale Light Replacement....73
12.1.3 Gauge Light Bulb Replacement....74
12.2 STEPWELL LIGHTS....74
12.2.1 Bulb Removal and Replacement....74
12.3 DRIVER'S AREA LIGHTS....74
12.3.1 Bulb Removal and Replacement....75
12.4 PASSENGER SECTION LIGHTING....75
12.4.1 LED Indirect Lighting / Parcel Rack Interior Lighting....75
12.4.2 LED Direct Lighting....75
12.4.3 Removal and Replacement of Reading Lamp Bulb....76
12.5 ENGINE COMPARTMENT LIGHTING....76

13. SPECIFICATIONS....77

SECTION CHANGE LOG

	DESCRIPTION	DATE
1	Added missing images in Torque Table, items 20 & 21	2017 07 06
2		
3		
4		
5		
6		

1. TORQUE TABLES

1.1 ALTERNATORS AND SURROUNDING COMPONENTS

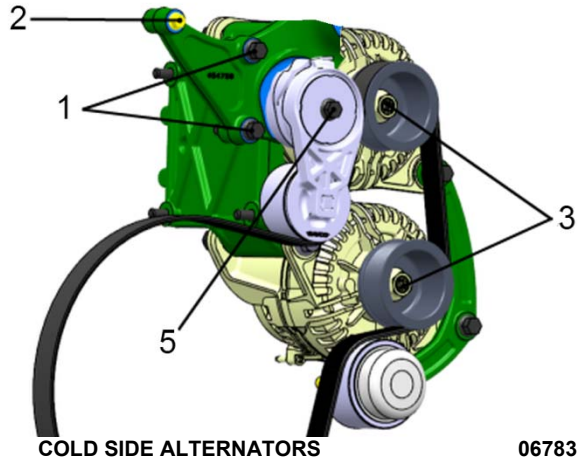

COLD SIDE ALTERNATORS 06783

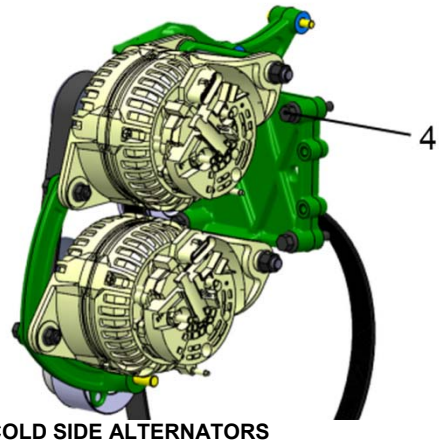

COLD SIDE ALTERNATORS 06784

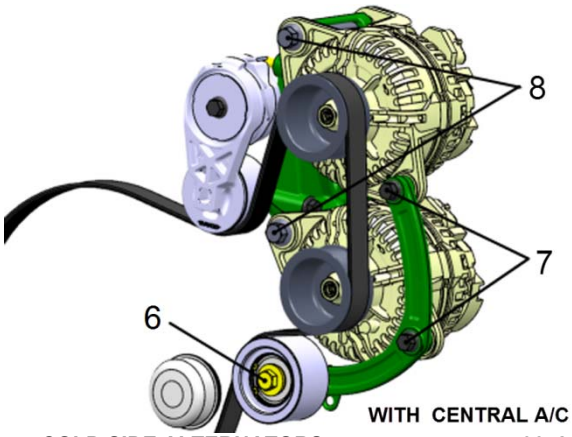

WITH CENTRAL A/C

COLD SIDE ALTERNATORS 06785

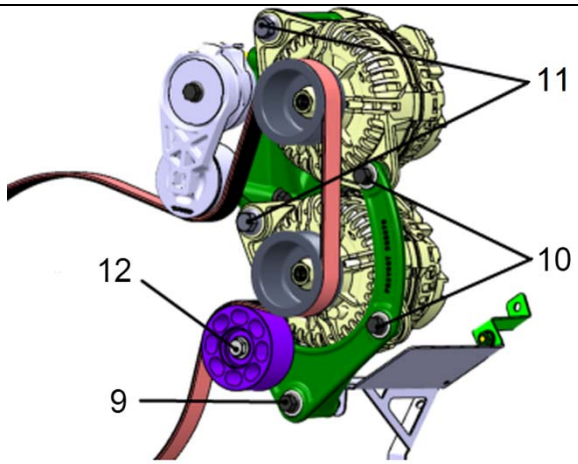

WITH SMALL A/C SYSTEM

COLD SIDE ALTERNATORS 06786

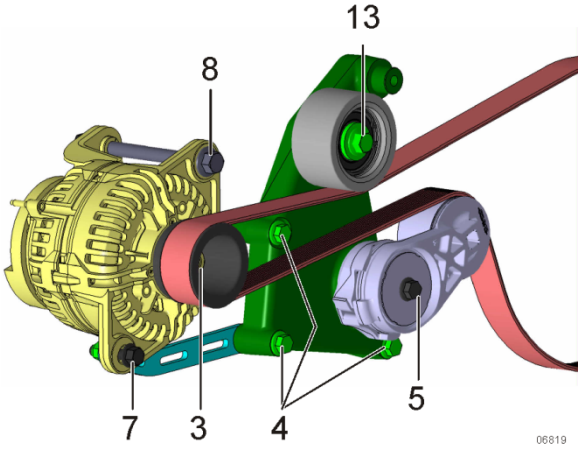

HOT SIDE ALTERNATOR, LOW LH (coaches)

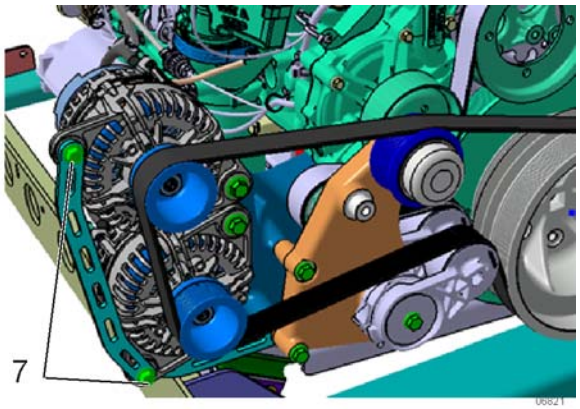

HOT SIDE ALTERNATORS (motorhomes)

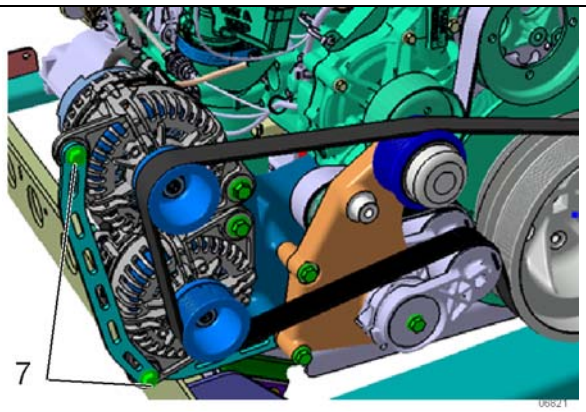

HOT SIDE ALTERNATORS (motorhomes)

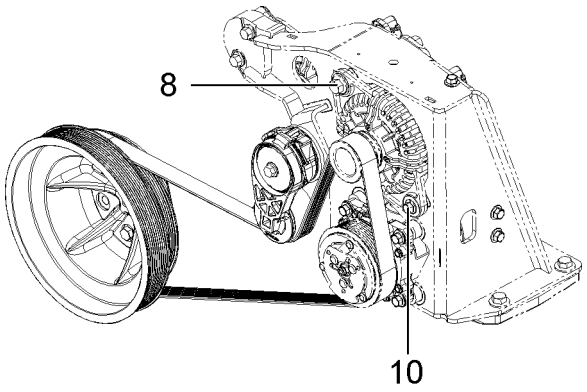

WITH SMALL A/C
06823

BOSCH HD10 ALTERNATORS		
No	DESCRIPTION	TORQUE
1	A/C tensioner / idler bracket mounting bolts (2)	43 lb-ft (58 Nm)
2	A/C tensioner / idler bracket mounting bolt (1)	22 lb-ft (30 Nm)
3	Alternator pulley (2) LH threads	70-80 lb-ft (95-108 Nm)
4	Alternator mounting bracket mounting bolts	48 lb-ft (65 Nm)
5	Alternator belt tensioner mounting bolt	48 lb-ft (65 Nm)
6	Alternator belt idler mounting bolt (central A/C config.)	82 lb-ft (111 Nm)
7	Alternator mounting bolts, short	48 lb-ft (65 Nm)
8	Alternator mounting bolts, long	82 lb-ft (111 Nm)
9	Alternator bottom bracket mounting bolt (small A/C system)	48 lb-ft (65 Nm)
10	Alternator mounting bolts (small A/C system)	48 lb-ft (65 Nm)
11	Alternator mounting bolts (small A/C system)	82 lb-ft (111 Nm)
12	Alternator belt idler mounting bolt (small A/C system)	48 lb-ft (65 Nm)
13	Alternator belt idler mounting bolt (hot side)	47 lb-ft (64 Nm)

1.2 ELECTRICAL CONNECTIONS – BATTERIES, MISCELLANEOUS

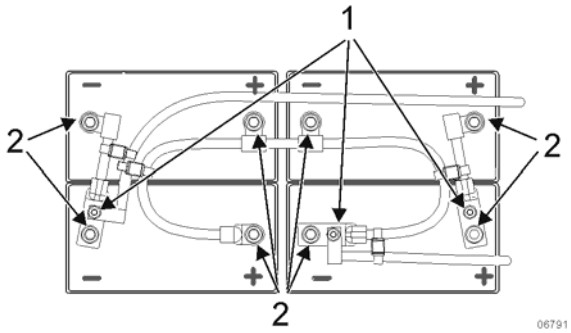

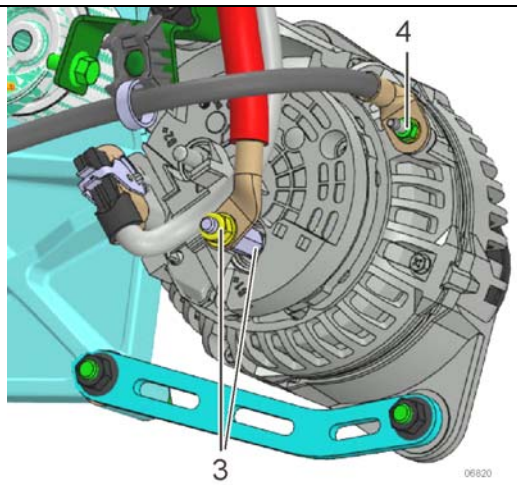

HOT SIDE ALTERNATOR, LOW LH (single)

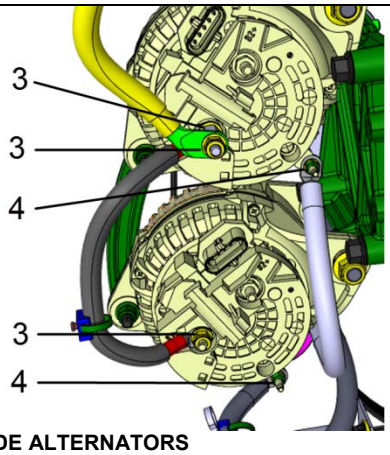

COLD SIDE ALTERNATORS

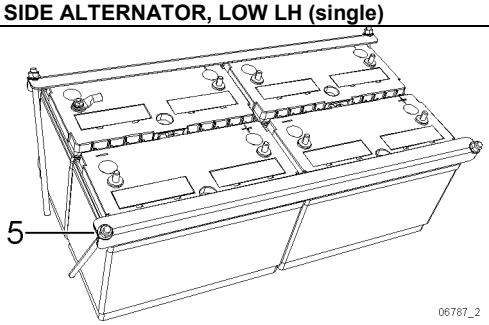

6

7

8

9

10

11

12

13

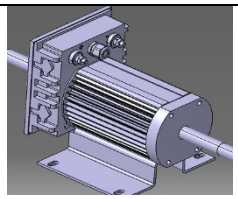

14

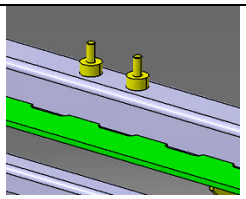

15

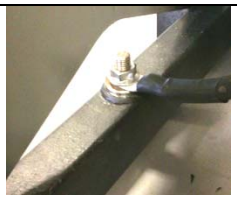

16

17

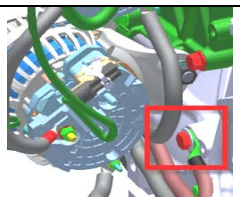 18	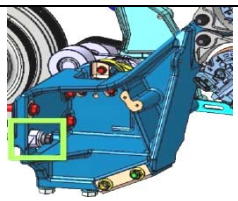 19	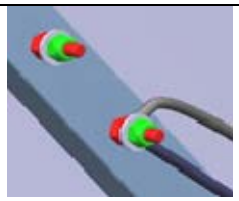 20	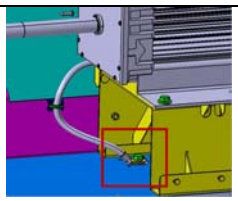 21
22	23	24	

ELECTRICAL CONNECTIONS - BATTERIES, MISC.		
No	DESCRIPTION	TORQUE
1	AGM battery Ground, 12VD & 24VD terminal nut	170 lb-in (19 Nm)
2	AGM battery connections, cap nut	170 lb-in (19 Nm)
3	Alternator power connection – nut & adaptor	11 lb-ft (15 Nm)
4	Alternator ground connection – nut	6 lb-ft (8 Nm)
5	Battery tie-down	45-55 lb-in (5-6 Nm)
6	Electronic ground bus bar ¼-20 stud (front & rear electric cmpt)	60 lb-in (7 Nm)
7	Junction block – 1 stud 3/8-16	114-126 lb-in (13-14 Nm)
8	Junction block – 4, 6, 8, 10 studs #10-32 brass	20 lb-in (2 Nm)
9	Booster block – 3/8-16 studs	119-131 lb-in (13-15 Nm)
10	ATC type fuse box – #8-32 screw terminal	15 lb-in (2 Nm)
11	Battery equalizer – 5/16-18 stud	91-101 lb-in (10-11 Nm)
12	VECR/F – M8-1.5 studs	164-181 lb-in (19-20 Nm)
13	24-V Inverter– M8-1.25 studs	104-115 lb-in (12-13 Nm)
14	Evaporator fan motor – 5/16-18 stud	48-50 lb-in (5-6 Nm)
15	Chassis ground studs – 1/2-13 stud stainless steel	170 lb-in (19 Nm)
16	Chassis battery ground studs – 1/2-13 stud stainless steel	170 lb-in (19 Nm)
17	Engine air preheater – M8-1.25 stud	84-108 lb-in (9-12 Nm)
18	Engine ground studs – M10-1. 5 stud	240 lb-in (27 Nm)
19	Alternator ground cable stud (hot side) – M10-1. 5 stud	240 lb-in (27 Nm)
20	On chassis welded ground stud – M6-1 stud	106 lb-in (12 Nm)
	On chassis welded ground stud – M10-1.5 stud	170 lb-in (19 Nm)
21	Evaporator fan motor ground cable stud – M8-1.25 stud	170 lb-in (19 Nm)
22	Battery master switch (Kissling type) – M12-1.75 stud	166-183 lb-in (19-21 Nm)
23	Circuit breaker (manual reset) 1/4-28 stud nut	58 lb-in (7 Nm)
24	Circuit breaker (switchable, manual reset) 1/4-24 stud nut	58 lb-in (7 Nm)

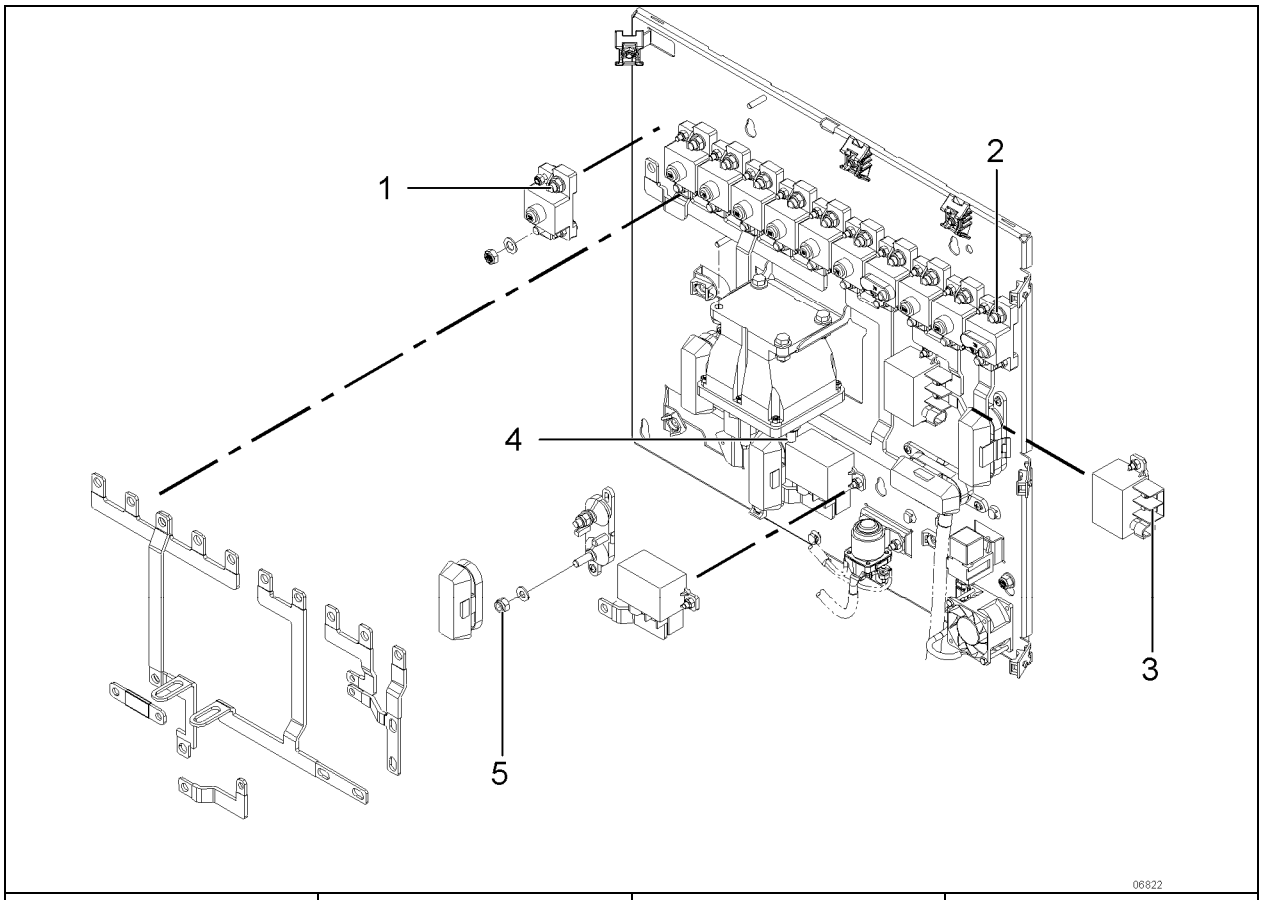

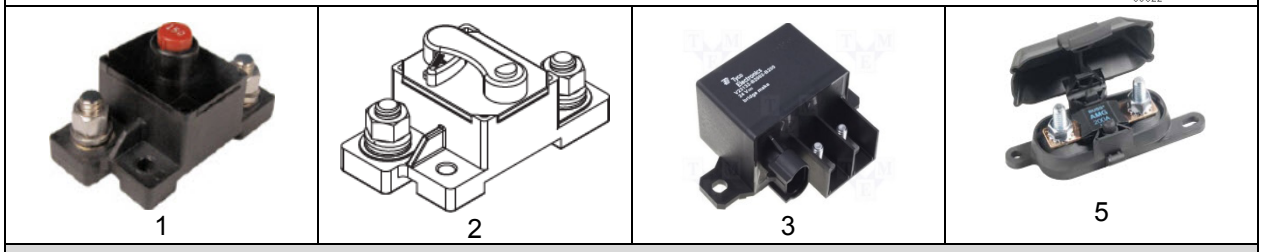

ELECTRICAL CONNECTIONS – MAIN POWER COMPARTMENT		
No	DESCRIPTION	TORQUE
1	Main circuit breaker 3/8-16 stud nut	135 lb-in (15 Nm)
2	Main circuit breaker (switchable, manual reset) 3/8-16 stud nut	135 lb-in (15 Nm)
3	Power relay stud nut	44 lb-in (5 Nm)
4	Master relay R1- Port 30 – M10-1.5 buss bar connection stud nut	160-195 lb-in (18-22 Nm)
5	Fuse holder M8-1.25 stud nut	96 lb-in (11 Nm)

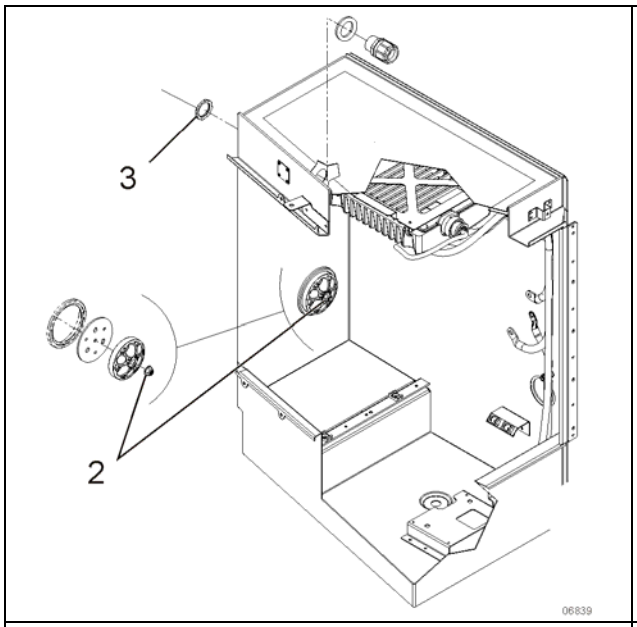

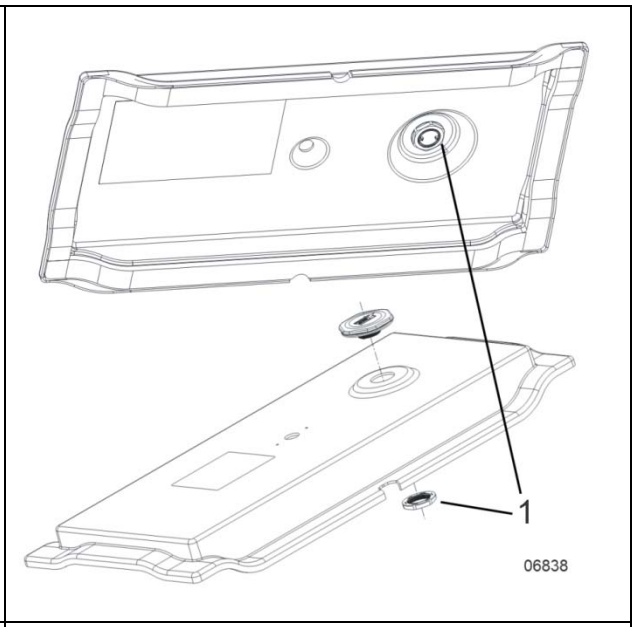

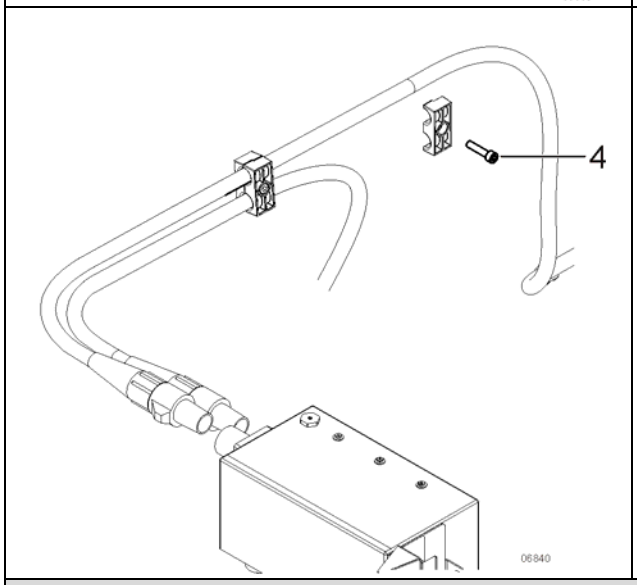

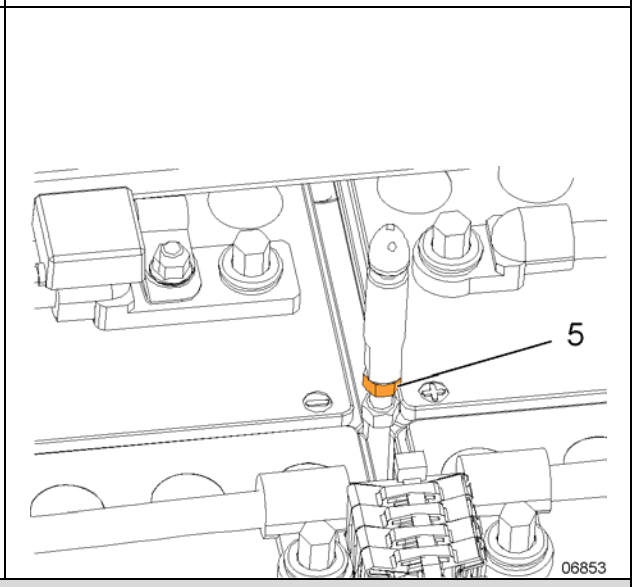

MISCELLANEOUS COMPONENTS

No	DESCRIPTION	TORQUE
1	Battery cover vent mounting nut	40-48 lb-in (4.5-5.4 Nm)
2	Cable pass-through assembly nut	90-110 lb-in (10-12 Nm)
3	Strain relief mounting lock nut	90-110 lb-in (10-12 Nm)
4	Screw - power cable support- electrical cooling fans	50-60 lb-in (5.6-6.8 Nm)
5	Battery cover stud nut	86-106 lb-in (10-12 Nm)

2. GENERAL DESCRIPTION

This vehicle uses a dual voltage system to obtain two different voltages (12-volts and 24-volts) for various electrical controls and accessories. The main power source incorporates four batteries connected in series-parallel. All batteries are kept uniformly charged by means of a 100 amp battery equalizer (standard), giving a maximum possible output supply of 100 amps on the 12 volt system. Both the 12V and 24V systems are controlled through individual main battery relays. Base configuration uses three 24V self-regulated alternators, belt driven from the engine, and can be reached through the engine compartment doors.

This vehicle is equipped with PRIME energy management system which features AGM batteries and a Vanner Vann-Bus 80 Series battery equalizer.

2.1 WIRING DIAGRAMS

A paper copy of the master wiring diagram of the electric circuits, covering standard and optional accessories and systems is located in the Technical Publications box. Usually, a separate wiring diagram page is provided for each major function or system. In some cases, more than one circuit may appear on one wiring diagram page; when this occurs, each circuit covered in this page is listed in the wiring diagram index. Moreover, a circuit may appear on several pages; in such case, the number(s) at the extremity of the diagram title will indicate the sheet reference number. Refer to the *"Wiring Diagram Index*" to ensure that the correct diagram is being used to trace the circuit in question. In addition to the major functions page reference, the wiring diagram index contains the following information pages.

- The Multiplexed Device Index,
- The Arrangement-Harness drawing showing the harnesses arrangement and harness number on the vehicle,
- Glossary,
- Circuit number listing,
- Circuit breaker code,
- Connector code,
- Diode number code,
- Resistor number code,
- Fuse code.

2.1.1 Using Wiring Diagrams

Three methods are used to "work" with electric wiring diagrams.

Situation: You have identified the defective part (breaker, diode, relay, etc.), and you wish to locate its corresponding circuit.

Problem: Circuit breaker CB5 is released (open circuit) and you don't know which circuit is affected.

a) Refer to wiring diagram index, and look for *"Circuit breaker list"*.

b) At item CB5, you will find the location, the Prevost number, the breaker function, the breaker ampere rating and the page on which to find the corresponding diagram.

c) Refer to page 3.1.

d) When you have located CB5, follow the wiring up to the end and find the diagram page number and function on which the circuit continues.

Situation: You have a problem with a specific system and you want to find the corresponding diagram.

Problem: The last three (3) speakers on the R.H. side of vehicle are inoperative and you must trace the electric circuit.

a) Refer to wiring diagram index and look for *"Sound system".*

b) You will find on page 35.1 & 35.2 the components as well as the electric wiring, thus providing you with a complete understanding of this circuit.

Situation: Using the Driver's Info Display (DID), you check on arrival if there are active errors in the vehicle electrical system. With the SYSTEM DIAGNOSTIC menu, highlight FAULT DIAGNOSTIC, highlight ELECTRICAL SYSTEM to request a diagnostic of the electrical system and then press the enter key. If applicable, the DID shows the fault messages or fault codes recorded. When more than one fault is recorded, an arrow pointing down appears on the right of the display. Use the down arrow to see all the fault messages.

Problem: DID displays the fault "Elec. Horn SW63; shorted to ground" as being active.

a) Refer to wiring diagram index, and look for *"Multiplexed Device Index"*, pages B1-B8.

b) In first column DEVICE ID, look for device SW63.

c) At device SW63, find the fault message, the minimum condition to activate, other inputs involved in logic, the multiplex module related to switch 63, the connector and pin number on the module and the page on which to find the corresponding diagram.

d) Once the problem corrected, the DID still shows the fault as being active. You have to leave the FAULT DIAGNOSTIC menu, wait approximately 20 to 30 seconds and then return to FAULT DIAGNOSTIC to request a new diagnostic of the ELECTRICAL SYSTEM from the MCM. The DID should display the fault as being inactive.

2.2 TESTING CIRCUITS

A careful study of the wiring diagrams should be made to determine the source and flow of current through each circuit. When a circuit is thoroughly understood, a point-to-point check can be made with the aid of the applicable wiring diagrams. Any circuit can be tested for continuity or short circuits with a multimeter or a suitable voltmeter.

All electrical connections must always be kept clean and adequately tight. Loose or corroded connections can result in discharged batteries, difficult starting, dim lights and improper functioning of other electric circuits. Inspect all wiring connections at regular intervals. Make sure knurled nuts on all amphenol-type plugs are securely tightened. Knurled nuts on the plastic amphenol-type connectors will click into a detent when properly tightened. Line connectors, who have the side locking tabs, must have the locks latched in place to ensure a proper electrical connection.

2.3 WIRE SIZES AND COLORS

Each wire in the electrical system has a specific size as designated on the wiring diagram. When replacing a wire, the correct size must be used. Never replace a wire with one of a smaller size. The vehicle electrical system is provided with different voltages. The insulation on each wire is distinctly colored in order to determine visually the wiring voltage and to assist in making connectors. The wires are color coded as follows:

Yellow	Data link High
Green	Data link Low
Orange	Connected to multiplex outputs
White	Connected to multiplex inputs
Red	24 volt system
Yellow	12 volt system
Black	grounded wire
Orange	speakers (+) (**Coaches Only)**
Brown	speakers (-) (**Coaches Only)**
Grey	spare wire

Black convolute tube with orange tape containing:

Black	120V ac system (live)
White	120V ac system (neutral)
Green	120V ac system (ground)

NOTE

Wires are identified at each 2-4 inch (5-10 cm) intervals by a printed number.

2.4 WIRE IDENTIFICATION

Each wire on a diagram is patterned to assist in tracing and testing circuits. The wire identification identifies the voltage reading or network, the circuit identification and the basic wire gauge.

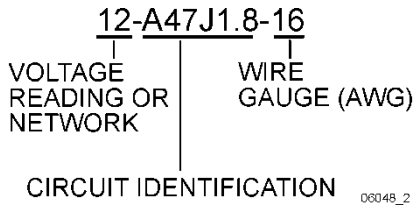

VOLTAGE READING OR NETWORK

0	120	J1939
5	ANA	J2284
0/12	BBUS	LIN
0/24	DATA	PWM
12	DBUS	GND
24	J1587	…other

CIRCUIT IDENTIFICATION

Ground circuits

Electronic: I/O module number followed by an R, followed by the connector number and pin number (cavity) (ex: A47RJ1.8, A54 RJ2.14).

Electronic ground studs: Number 00 followed with the stud location[1] and sequential number (ex: 00R1, 00F4).

Chassis ground studs: Number 0 followed with the stud location and sequential number (ex: 0EV1, 0FH2).

Power & voltage carrying circuits

Power distribution: Uphill component identification as circuit number (ex.: F96, CB22).

Multiplex outputs: Output module number and connector and pin number (cavity) (ex: A55J1.4, A49J2.9)

Relays, diodes, resistors and any other component output: Component number and pin number as circuit name (ex: SW55A, R30.87, D12.B).

NETWORKS	WIRE GAUGE (AWG)		
DL0 = Bbus Mux	0000	3	14
DL1 = J1939	000	4	16
DL2 = J2284	00	6	18
DL3 = Dbus Mux	0	8	20
DL7 = Engine subnet	1	10	22
DL9 = Powertrain subnet 900 / 901= J1587	2	12	24

[1] For stud location, refer to page 2.1 of wiring diagram

2.5 SPARE WIRES

When the vehicle leaves the factory, and even in the case of a fully-equipped vehicle, an important number of unconnected spare wires are routed between the junction boxes. Consequently, for any connection of an additional accessory, refer to page *"Spare wires"* in master wiring diagram to determine the number, the gauge and location of these wires.

CAUTION

Wire size is calibrated according to the breaker or fuse that protects it. When using a spare wire to replace a damaged wire, assure that the spare wire size is equal or larger than the wire being replaced. Using a wire too small for the breaker or fuse amperage might cause overheating of the wire.

NOTE

Spare wires are identified by a wire identification number and by the letters "SP", to designate "spare".

2.6 CIRCUIT BREAKERS

The electric circuits are protected by manual reset type circuit breakers. The main circuit breakers (Figure 2), as well as those protecting the A/C system, are located in the main power compartment and are accessible from the engine compartment curb-side door, on R.H. side of the vehicle.

This type of circuit breaker de-energizes the circuit without disconnecting any wire.

Some circuit breakers such as CB2 & CB6 are different in the fact that you may open the circuit manually, to do so simply press the blue button on breaker to open the circuit, repair defective circuit, and afterwards swing red reset lever of breaker to close the circuit.

FIGURE 1: BREAKER WITH MANUAL TRIP BUTTON AND RESET LEVER SUCH AS CB2 & CB6

2.6.1 X3 coach main circuit breakers

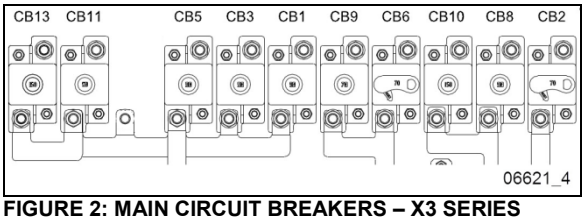

FIGURE 2: MAIN CIRCUIT BREAKERS – X3 SERIES COACHES

MAIN CIRCUIT BREAKERS – X3 COACH			
CB1	24 WUP front distribution	24 VI	90 A
CB2	12 ECU & 12VD front distribution – ignition & engine start	12 VD	70 A
CB3	HVAC – evaporator	24 VI	90 A
CB5	24 WUP rear distribution	24 VI	90 A
CB6	24VD rear distribution & WCL	24 VD	70 A
CB8	12 WUP rear distribution	12 VI	90 A
CB9	battery charger - preheater	24 VD	70 A
CB10	12 WUP front distribution	12 VI	150 A
CB11	Sound system	24 VI	50 A
CB13	Inverter 120 VAC outlets	24 VI	150 A

VD= volts direct. The electrical components connected to these circuit breakers are direct-connected to the battery.

VI= volts indirect. Electrical power is supplied via master relay R1 which engages when ignition key is in the ON or ACC position and main electrical shut-off switch is set to ON.

2.6.2 X3 VIP main circuit breakers

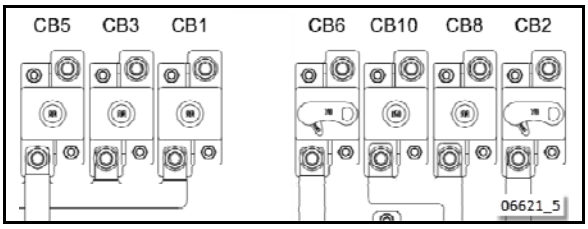

FIGURE 3: MAIN CIRCUIT BREAKERS – X3 VIP SERIES

MAIN CIRCUIT BREAKERS – X3 VIP			
CB1	24 WUP front distribution	24 VI	90 A
CB2	12VD front distribution – ignition & engine start	12 VD	70 A
CB3	24WUP Main distribution power full A/C	24 VI	90 A
CB5	24 WUP rear distribution	24 VI	90 A
CB6	24VD rear distribution	24 VD	70 A
CB8	12 WUP rear distribution	12 VI	90 A
CB10	12 WUP front distribution	12 VI	150 A

VD= volts direct. The electrical components connected to these circuit breakers are direct-connected to the battery.

VI= volts indirect. Electrical power is supplied via master relay R1 which engages when ignition key is in the ON or ACC position and main electrical shut-off switch is set to ON.

2.6.3 VECR/VECF breakers

Smaller circuit breakers are located in the VECF and VECR in front and rear electrical compartment respectively.

2.6.4 Electric Cooling fan circuit breakers

MAXI 50 Amp automatic reset CB

Each radiator or Charge Air Cooler electric fan may be protected by a MAXI 50 amp single pole thermal type breaker with automatic reset. If tripped, the circuit breaker remains open until it has cooled down sufficiently. These circuit breakers are located in the electric fan drive breaker box (FIGURE 4).

This type of circuit breaker inserts in MAXI fuse blades mounting style. Simply pull the circuit breaker off the blade type mount to replace.

MAXI 50 Amp manual reset CB

Each radiator or Charge Air Cooler electric fan may be protected by a MAXI 50 amp single pole thermal type breaker with manual reset. If tripped, the circuit breaker remains open until it is reset by pressing the reset button.

This type of circuit breaker inserts in MAXI fuse blades mounting style. Simply pull the circuit breaker off the blade type mount to replace.

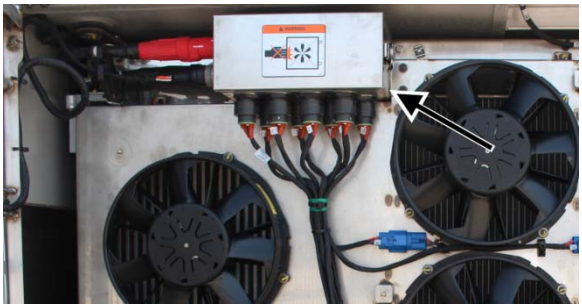

FIGURE 4: ELECTRIC COOLING FAN CIRCUIT BREAKER BOX

ELECTRIC FAN DRIVE 50 Amps CIRCUIT BREAKERS			
ID	Description		connector
CB201	Charge Air Cooler fan #1	Mo65	1
CB202	Charge Air Cooler fan #2	Mo67	2
CB203	Radiator fan #3	Mo68	3
CB204	Radiator fan #4	Mo69	4
CB205	Radiator fan #5	Mo70	5
CB206	Radiator fan #6	Mo71	6
CB207	Radiator fan #7	Mo72	7
CB208	Radiator fan #8	Mo73	8

2.7 COOLING FAN CONNECTIONS

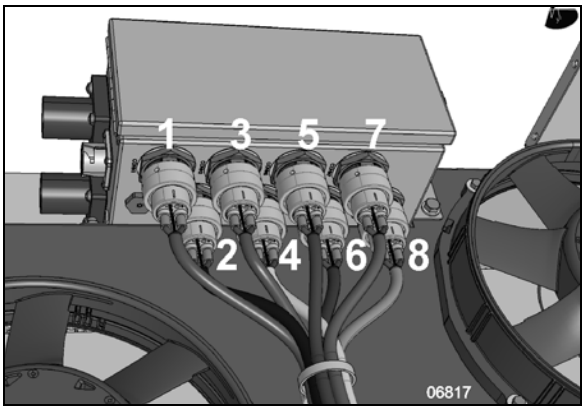

FIGURE 5: COOLING FANS CIRCUIT BREAKER BOX - CONNECTOR NUMBER

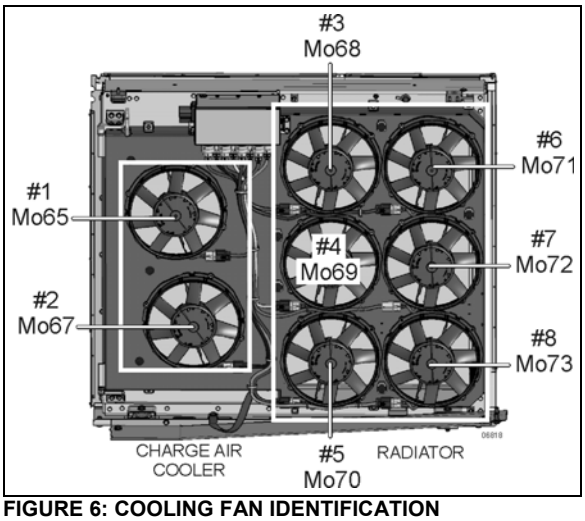

FIGURE 6: COOLING FAN IDENTIFICATION

WARNING

WHEN THE ENGINE IS RUNNING…

Cooling fans may start running at any moment.

Keep hands away from cooling fans or keep the radiator door closed.

WARNING

Cooling fans may be running when the engine is shut down in the following conditions:

- If a High Exhaust Temperature condition exists (e.g. following regeneration). The CAC fans will keep running for a maximum of 15 minutes.
- During the **Electric Motor Test Sequence**, the cooling fans will start running briefly.

The CAC fans and the radiator fans are controlled by two multiplex modules, i.e. AE49 & AE52. Each module controls one (1) CAC fan and three (3) radiator fans. For this reason, if one module fails, sufficient cooling will still be available for the CAC and the radiator through the second module.

Module AE49: Fans 1, 4, 6, 8

Module AE54: Fans 2 3, 5, 7

If one fan doesn't function, diagnose the probable causes of failure for this particular fan. If one CAC fan and three radiator fans are not functioning, then you should suspect that one of the multiplex modules (AE49 or AE52) is defective.

2.8 MULTIPLEX FUSES

The multiplex outputs are protected in current by an internal "soft-fuse". Each output has programmed specific maximum amperage. When an output is shorted, the current gets above the limit and the soft-fuse intervenes to turn the output OFF. The output stays OFF until the "soft-fuse" is reset.

Turn the ignition key to the OFF position and turn to the ON position again. This resets all "soft-fuses".

There is also hardware fuses used to protect the incoming power to the multiplex modules. These fuses are located inside the VECF (Vehicle Electrical Center Front) and VECR (Vehicle Electrical Center Rear).

2.9 ELECTRONIC GROUND

All the electronic modules installed on this vehicle are grounded to the electronic ground stud located in the main power compartment, using separate and protected circuits.

All the loads fed by a particular electronic module are grounded to that same module. However, a load can be grounded to another module in the situation when the load can be powered by two different modules for redundancy need.

2.10 RELAYS

Relays are used to automatically energize or de-energize a circuit from a remote location. The relay draws a very low current to energize its coil. Once the coil is energized, it develops a magnetic field that pulls a switch arm closed or open, to either energize or de-energize a given component. As the control current required for the coil is very low, the relay allows a remote station to control a high energy circuit without running great lengths of costly high capacity cable, and also eliminates the need for high amperage switches and heavy connectors.

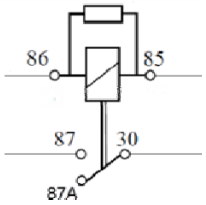

86 coil
85 coil
30 common feed
87 normally open contact NO
87A normally closed contact NC

FIGURE 7: SINGLE POLE DOUBLE THROW RELAY

NOTE

Each relay is identified with "12V" or "24V" printed on its casing in order to identify the coil operating voltage.

CAUTION

The Multiplex vehicle uses a VF4 relay specially designed for Volvo that has different internal characteristics than the current VF4 relay. It is important to use only the new part marked Volvo as a replacement in Multiplex vehicles. Regular relays have an inadequate lifespan for Multiplex vehicles.

2.11 PRECAUTIONS

DANGER

Prior to working on a system inside vehicle, make sure to cut electrical power and air supply. A component could be supplied with electricity even if the ignition switch is set to the OFF position and/or a component could be pressurized even if air tanks are emptied. Always refer to the appropriate wiring and pneumatic diagrams prior to working on electrical and/or pneumatic systems.

NOTE

When the ignition switch is set to the OFF position, the electrical components are not energized except for the MCM, engine ECU, transmission ECU, instrument cluster module, the battery equalizer, the preheater system, AFSS, the wheelchair lift system and some Multiplex modules which remain energized during 15 minutes after the ignition has been set to the OFF position. Prior to working on one of these electrical components, set the main electrical shut-off switch located above the batteries, on the exterior wall of the main power compartment to the OFF position.

If the vehicle will not be operated for a long period (more than 2 weeks), it is recommended, in order to prevent the batteries from discharging, to trip main circuit breakers CB2 & CB6 located on the rear junction panel to stop the small current drawn by the radio preset station memory, the MCM memory and the instrument cluster clock. Note that the radio station presets will be erased, same thing for the diagnostic codes history and the instrument cluster clock will have to be reset.

2.12 ELECTRONIC MODULES CONNECTOR PIN-OUT

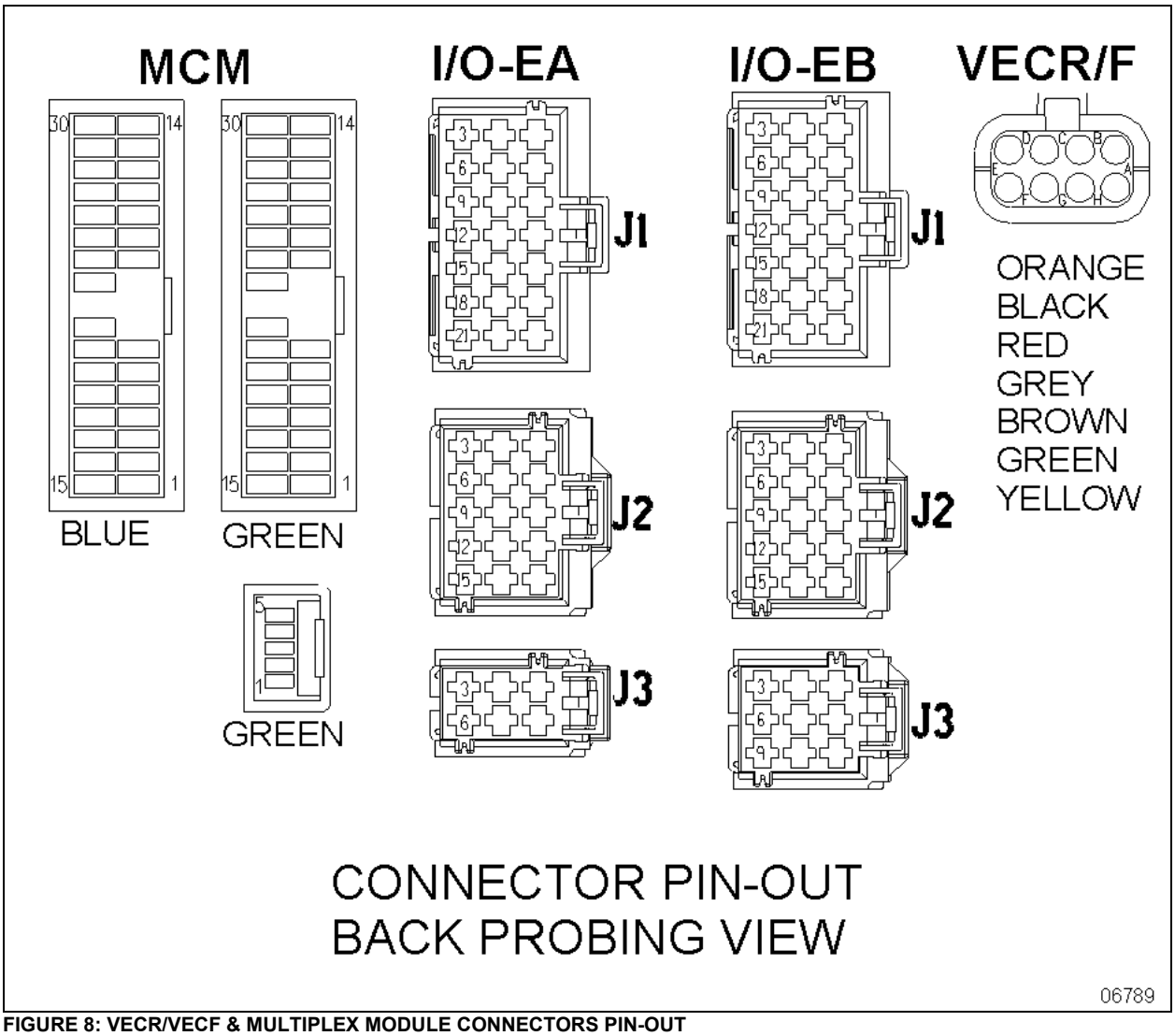

FIGURE 8: VECR/VECF & MULTIPLEX MODULE CONNECTORS PIN-OUT

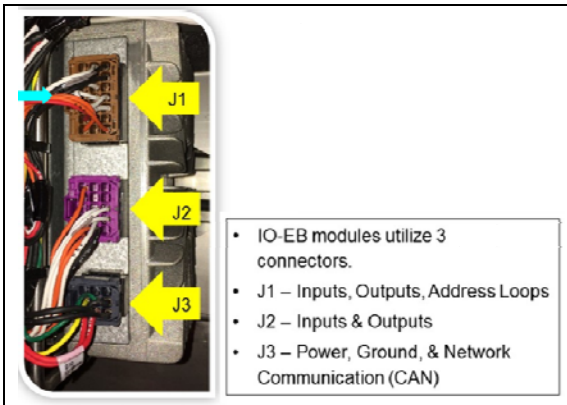

FIGURE 9: I/O-EB MODULE

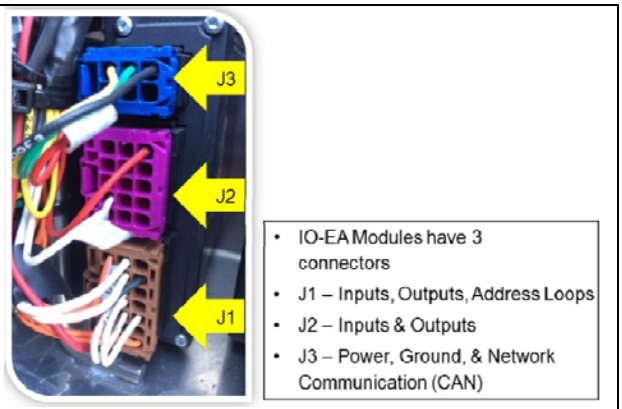

FIGURE 10: I/O-EA MODULE

I/O-EA & I/O-EB MUX modules

Connector: AMP MCP 2.8

Contact loading of housings

Loading the contacts is only possible if the secondary lock is in the unlock position.

Proper orientation of the contact is important. If the orientation is incorrect, the contact stops too early in the region of the secondary lock and the whole crimp stands out from the housing. With correct orientation the secondary lock stops with a metallic “click” sound.

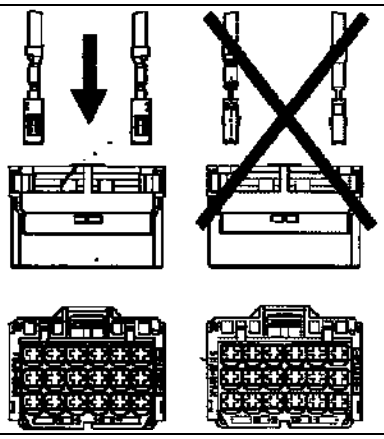

Locking the secondary lock

Delivery state of the secondary lock is the open position. In this position the AMP MCP2.8 contacts can be loaded. After that the secondary lock is moved into the final locking position by hand.

At a sufficient large surface a perpendicular force is initiated by (preferably) the thumb of one hand. Proper final position is reached a click noise can be heard. Make sure that both sides are locked.

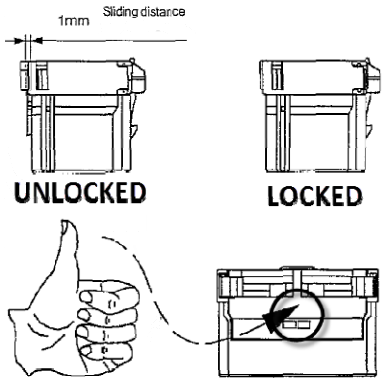

Unlocking the secondary lock

To unlock the secondary lock on these housings, a simple solid commercial ball pen is sufficient. The ball pen has to be inserted perpendicularly according the image, between the locking latch of the housing and the secondary lock block. Then it will be pushed with care until the opening is felt (a “click” sound can be heard).

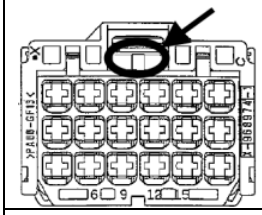

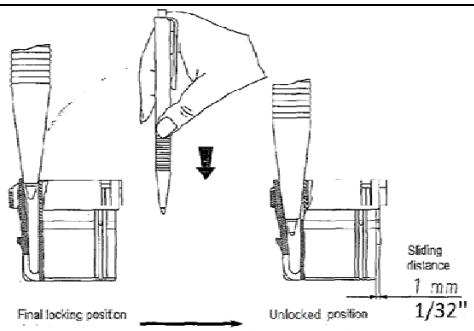

Extracting the contacts from housings

To extract contacts, the secondary lock has to be in the unlock position. The tool has to be inserted from connection side into the cavity of housing up to the stop; the contact will be unlocked thereby. Keep the tool in that position and then take the contact out by pulling on the cable. Note: Do not pull the cable before unlocking the contact; on the other hand by pressing the cable gently against the cable outlet direction the unlocking procedure will be facilitated.

EXTRACTOR/TOOL: Prevost 568103

Multiplex modules	Connector type	Contact removal
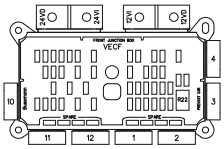 **VECR / VECF** 06627	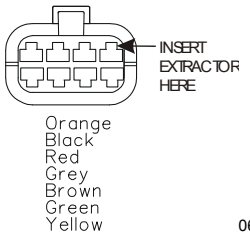 06632 **BUSSMAN**	EXTRACTOR/TOOL: Prevost #682256 (Packard 12094429) Remove the terminal by disengaging the flexible lock tab on the terminal. Gently remove the terminal from the connector by pulling on the wire.

3. TROUBLESHOOTING AND TESTING THE MULTIPLEX VEHICLES

3.1 PROBING VOLTAGE ON THE MULTIPLEX CIRCUITS

Some Multiplex modules are supplied by 12 volts while others are supplied by 24 volts. The 12-volt or 24-volt information is found on the modules symbol in the wiring diagram. Before taking voltage readings to track the source of a problem, first verify if the module is supplied by 12V or 24V, if not, residual voltage on the module inputs/outputs can draw an erroneous conclusion.

Inactive Multiplex output = Residual voltage of 18% to 33% of supply voltage.

Inactive Multiplex input = Residual voltage of 50% of supply voltage.

NOTE

- *Verify on the wiring diagram whether the voltage is 12V or 24V,*
- *For a 12V module: an active voltage would be 12V or 0V but not in between. If you measure the intermediate tensions (ex. 6V, 2V, or 4V) this must be interpreted as if the input or the output is inactive.*
- *For a 24V module: an active voltage would be 24V or 0V but not in between. If you measure the intermediate tensions (ex. 12V, 4V, or 8V) this must be interpreted as if the input or the output is inactive.*

3.2 DL0 (BBUS MUX) NETWORK

The DL0 (BBUS MUX) network wiring is separated in sections and uses connectors that are not shared with other circuits. This allows sections of the network to be isolated to help locate short-circuit on the DL0 (BBUS MUX).

In case of a short-circuit on the DL0 (BBUS MUX) network, this affects all the modules and they all act as “No response” in the error messages of the “ELECTRICAL SYSTEM” menu. To locate a short-circuit, proceed by disconnecting one module zone at a time while verifying if this makes inactive the errors in the modules still connected. Connector C1 (front electrical & service compartment) disconnects all the modules at the rear of the vehicle from the network. Connector C5 (front electrical & service compartment) disconnects all the modules from the entrance door & wiper control panel. Connector C3 (rear electrical panel) disconnects all the modules at the rear of the vehicle from the network.

Example: Disconnect C5 and C1 and then verify the status of the errors. If the front modules (A41 to A46) now give inactive errors, which means short-circuit is elsewhere than in the front electrical & service compartment.

3.2.1 DL0 (BBUS MUX) Connection On The Telltale Panel And The Hvac Control Unit

The telltale panel module and HVAC module are linked to the MCM by a DL0 (BBUS MUX) connection. In case of a connection default, the telltale panel LCD display shows "CAN", and on the HVAC control unit, the temperature display indicates "---". To confirm a connection default, check that the fan speed on the driver's section HVAC control unit cannot be adjusted.

Moreover, specific error messages from these 2 modules can be read in the ELECTRICAL SYSTEM menu.

NOTE

While downloading a new vehicle program in the MCM from a computer, the DL0 (BBUS MUX) network is temporarily interrupted and therefore a DL0 (BBUS MUX) reference appears in the telltale panel LCD display.

3.2.2 Spare DL0 (BBUS MUX)

A spare DL0 (BBUS MUX) network is installed between the front and the rear of the vehicle. It has connectors installed at each end to facilitate swapping from the regular DL0 (BBUS MUX) network to the spare DL0 (BBUS MUX) network. Refer to the vehicle wiring diagram and section 4.6 for more information.

3.3 ELECTRICAL SYSTEM DIAGNOSTIC

Using the Driver’s Info Display (DID), check if there are active errors in the vehicle electrical system. With the SYSTEM DIAGNOSTIC menu, highlight FAULT DIAGNOSTIC and then highlight ELECTRICAL SYSTEM to request a diagnostic of the electrical system from the MCM. Press the enter key. If applicable, the DID shows the multiplex device ID, the fault messages or fault codes recorded. When more than one fault is recorded, an arrow pointing down appears on the right of the display. Use the down arrow to see all the fault messages.

Once the problem corrected, the DID still shows the fault as being active. You have to leave the FAULT DIAGNOSTIC menu, wait approximately 20 to 30 seconds and then return to FAULT DIAGNOSTIC to request a new diagnostic of the ELECTRICAL SYSTEM from the MCM. The DID should display the fault as being inactive. The MCM can store up to 20 faults, i.e. the first 10 and the last 10. Middle faults will be erased. If the breakers are tripped, the fault history will be erased from the MCM memory.

NOTE

When performing an electrical system diagnostic with the DID, the message « No Response ModA41» indicates either module A41 is not responding due to a DL0 (BBUS MUX) link problem or module A41 is not powered. Similar messages exist for all modules (A42, A43, A44, etc.).

NOTE

Because it is easier to do, check first if the module is powered by probing on its gray connector. If it is, then you can conclude that there is a DL0 (BBUS MUX) link problem. Refer to DL0 (BBUS MUX) NETWORK LAYOUT AND TROUBLESHOOTING in this section.

3.4 MULTIPLEX INPUT TEST MODE

The multiplex input test provides useful information to diagnose multiplexed inputs of switches and sensors, complimentary to the electrical system diagnosis.

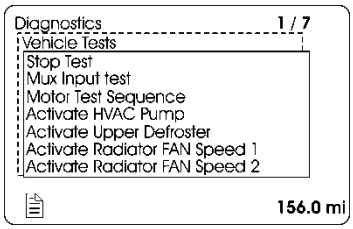

To initiate the test mode, use the Driver Information Display (DID) DIAGNOSTICS menu. Select VEHICLE TESTS submenu and then MUX INPUT TEST. Press ENTER button to start the test. The DID status line will show TEST to confirm the test mode is active. To exit test, press ESCAPE button, select STOP TEST submenu and then press ENTER button twice. TEST will disappear from the DID status line.

Instrument panel audible alarm emits a *beep* each time an OFF/ON transition is detected on a multiplex input. This allows quick verifying if the switches and sensors are detected or seen by the multiplex modules. When the vehicle is parked, the back-up alarm also emits a *beep* that allows verification of the sensors at the rear of the vehicle.

Certain inputs are doubled (for example, turn signal switch on multi-function lever, door operating buttons) and also other inputs activate at the same time (ex. kneeling switch and Kneeling proximity sensor switch). For these inputs, 2 *beeps* are emitted. If only one *beep* is heard, one of the inputs is defective.

SWITCHES AND SENSORS SUPPORTED BY THE SWITCH/SENSOR TEST MODE
HVAC control unit driver's section ON/OFF
HVAC control unit driver recirculate switch
HVAC overhead compartment fan switch
HVAC control unit passenger's section ON/OFF
Radiator fan clutch switch
Engine rear start selector switch "rear start"
Engine rear start selector switch "normal"
Engine ignition front switch
Engine ignition rear switch
Entrance door inside opening /closing switch
Entrance door outside opening /closing switch
Electric horn button
Kneeling down switch
Kneeling up switch
Baggage compartment locking system switch
Baggage compartment door ajar open sensor
Steering wheel control buttons
Lavatory emergency switch
Interior lighting switch, 2 positions
Driver's area lighting switch
Reading lights switch
Multi-function lever LH turn signal
Multi-function lever RH turn signal

Fog lights switch
Hazard warning flashers switch
Multi-function lever courtesy blinkers switch
Headlights switch, 2 positions
Multi-function lever headlights beam toggle switch
Baggage compartment door lock/unlock switch
Tag axle lever
Wheelchair lift activation switch
Windshield lower wiper
Multi-function lever windshield wipers intermit.
Lower windshield wipers backup switch
Lower windshield washer switch
Upper windshield washer switch
Upper windshield wipers switch, 2 positions

The following inputs, either certain options or sensors which are difficult to activate, are not supported by the switch/sensor test:

- Service chime enable switch,
- Horn selector switch,
- Outside rear view mirror heat,
- Mirror control switches,
- Low-buoy switch,
- Starter sensor,
- ABS warning input,
- WCL switch,
- Driver's power window switch,
- Fog lights switch,
- Alternator sensors 1 & 2,
- Retarder active signal,
- Radiator fan speed 1 & 2 signals.

In test mode, with the parking brake applied and the passenger set point set to a value higher than 64°F (18°C), the circulator pump is not set to OFF as it would normally do when the outside temperature gets above 50°F (10°C). This feature allows verification of the pump when inside a garage. This is also useful when working on the heating system to remove air pockets trapped in the system.

When performing an A/C cooling test and having the water pump shut off is required, initiate the multiplex input test mode. While in this mode, just set the passenger set point temperature to the minimum 64°F (18°C) to shut off the pump.

3.5 MOTOR TEST SEQUENCE

This test mode allows testing of the electric motors, the A/C compressor clutch and unloader and the HVAC system solenoid valves without the need to have the engine running. Note that while in test mode, the engine cannot be started.

Prerequisite conditions for the motor test mode:

A. The battery charger must be connected to a 110-120 volt power supply. If not, the test will be interrupted when the voltage drops below 24.4 volts,

B. Engine not running,

C. Parking brake applied,

DANGER

Before starting the test sequence, make sure that no one is doing maintenance in the evaporator compartment, the condenser compartment or close to the CAC & radiator electric cooling fans.

NOTE

The back-up alarm will sound (beep) ten (10) times prior the test starts to warn the persons who do work on the vehicle. Moreover, the alarm will beep to tell the person conducting the motor test sequence to move to the next test location on the vehicle.

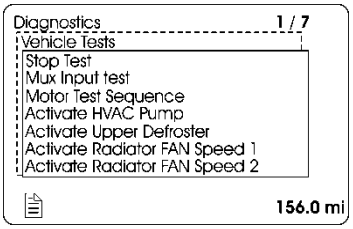

To enter this mode:

- Using the dashboard DID, select DIAGNOSTICS menu and press ENTER button ;

- Select VEHICLE TEST, press ENTER button then select MOTOR TEST SEQUENCE and press ENTER button to initiate the test mode for electrical motors;
- Ten (10) *beeps* can be heard indicating the motor test mode has started.

Using the test mode:

- During the entire test, the telltale panel audible alarm gives a signal each second to remind that the motor test mode is underway.

3.5.1 Test Sequence – Coaches only

Test Sequence – Coaches only	
Go to the condenser compartment	• The condenser fans start. Speed will gradually increase to maximum speed. • The passenger's unit refrigerant solenoid valve activates. The refrigerant solenoid valve of the overhead compartment A/C system activates.

Then 5 beeps can be heard from the back-up alarm to indicate to go to the engine compartment.

In the engine compartment, the sequence is as follows	• The main power compartment fan activates for 3 seconds. • Toilet fan motor starts. • A/C compressor clutch activates 3 times. • The compressor unloader activates 3 times. • The electric cooling fans start running for 20 seconds.

Then 5 beeps can be heard from the back-up alarm to indicate to go to the evaporator compartment.

In the evaporator compartment	• Evaporator fan motor runs at speed 1 for 3 seconds then runs at speed 2 for 2 seconds. • Hot water pump starts running for 5 seconds and hot water pneumatic valve cycles 3 times.

5 beeps from the back-up alarm indicate to get to the driver's area inside the vehicle.

Inside the vehicle	• The driver's HVAC unit refrigerant solenoid valve cycles 3 times and the hot water pneumatic valve cycles 3 times also. • Left and right overhead compartment fans start running one after the other for 5 seconds. • The upper windshield defroster (optional) starts

running.
To exit the electric motors test sequence, press ESCAPE button, select STOP TEST submenu and then press ENTER button twice.

3.5.2 Test Sequence – VIP With Central HVAC System

Test Sequence – VIP With Central HVAC System	
	• Driver's & passenger's unit fresh air damper open. *[20 seconds delay]*
Go to the condenser compartment	• The condenser fans start. Speed will gradually increase to maximum speed. *[3 seconds delay]* • The passenger's unit refrigerant solenoid valve activates 3 times. *[10 seconds delay]*

Then 5 beeps can be heard from the back-up alarm to indicate to go to the engine compartment and main power compartment.

In the engine compartment, the sequence is as follows	• The main power compartment fan activates for 3 seconds. • A/C compressor clutch activates 3 times. • A/C compressor unloader activates 3 times. • The electric cooling fans start running for 20 seconds.

5 beeps from the back-up alarm indicate to go to the evaporator compartment.

In the evaporator compartment	• Evaporator fan motor runs at speed 1 for 3 seconds then runs at speed 2 for 2 seconds. • Hot water pump starts running for 5 seconds and hot water pneumatic valve cycles 3 times.

5 beeps from the back-up alarm indicate to go to the spare wheel compartment behind the reclining bumper.

Inside the spare wheel compartment	• Driver's unit refrigerant solenoid valve activates 3 times. • Driver's unit hot water pneumatic valve cycles 3 times. • Closing of the fresh air dampers.
To exit the electric motors test sequence, press ESCAPE button, select STOP TEST submenu and then press ENTER button twice.	

3.5.3 Test Sequence – VIP With Small HVAC System

Test Sequence – VIP With Smal System		
	→	• Driver's unit fresh air damper opening. [20 seconds delay]
Go to the condenser compartment	→	• The condenser fan start. Speed will gradually increase to maximum speed. *[3 seconds delay]*

Then 5 beeps can be heard from the back-up alarm to indicate to go to the engine compartment and main power compartment.

In the engine compartment, the sequence is as follows	→	• The main power compartment fan activates for 3 seconds. • A/C compressor clutch activated 3 times. [5 seconds delay] • The electric cooling fans start running for 20 seconds.

5 beeps from the back-up alarm indicate to go to the spare wheel compartment behind the reclining bumper.

Inside the spare wheel compartment	→	• Auxiliary unit refrigerant solenoid valve activates 3 times. [*10 seconds delay]* • Hot water pump starts running for 5 seconds. • Driver's unit refrigerant solenoid valve activates 3 times. • Driver's unit hot water pneumatic valve cycles 3 times. • Closing of the fresh air dampers.
To exit the electric motors test sequence, press ESCAPE button, select STOP TEST submenu and then press ENTER button twice.		

3.6 FORCED ACTIVATION OF THE COOLING FANS

To prevent the engine from overheating in case of malfunction of the cooling fans activation system, it is possible to force activation of the CAC & radiator fans.

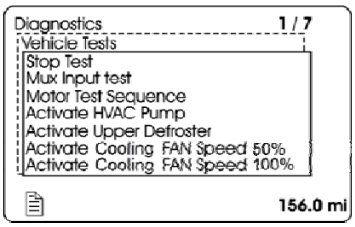

Prerequisite condition: The engine is running (fast idle if at stand still).

1. On the Driver Information Display, select DIAGNOSTICS menu. Select VEHICLE TESTS submenu and then ACTIVATE COOLING SPEED FAN 50% or ACTIVATE COOLING FAN SPEED 100% as required.
2. The DID status line will show TEST to confirm the forced activation of the radiator fan clutch. To cancel, turn the ignition switch to the OFF position or press ESCAPE button, select STOP TEST submenu and then press ENTER button twice. TEST will disappear from the DID status line.

WARNING

Keep hands away from the cooling fans as they may start running at any moment.

3.7 DL0 (BBUS MUX) NETWORK LAYOUT AND TROUBLESHOOTING

MUX MODULE IDENTIFICATION	MODULE TYPE	LOCATION
A36	MCM	FJB
AE41	I/O-EA	FJB
AE42	I/O-EA	FJB
AE43	I/O-EB	FJB
AE44	I/O-EB	FJB
AE45	I/O-EB	FJB
AE46	I/O-EB	FJB
AE47	I/O-EB	R.H. CONSOLE
AE48	I/O-EB	R.H. CONSOLE
AE49	I/O-EB	RJB
AE50	I/O-EB	RJB
AE51	I/O-EB	RJB
AE52	I/O-EB	RJB
AE53	I/O-EB	PARCEL RACK
AE54	I/O-EB	EVAPORATOR CMPT
AE55	I/O-EA	DASHBOARD
AE56	I/O-EA	DASHBOARD
AE57	I/O-EA	WCL CMPT

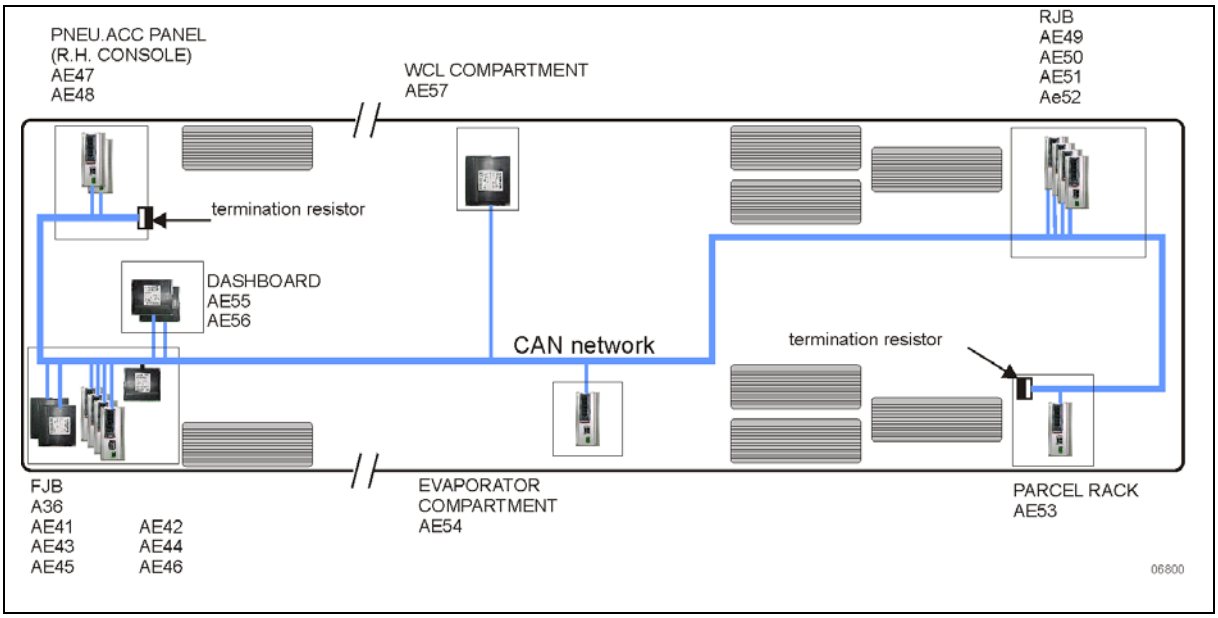

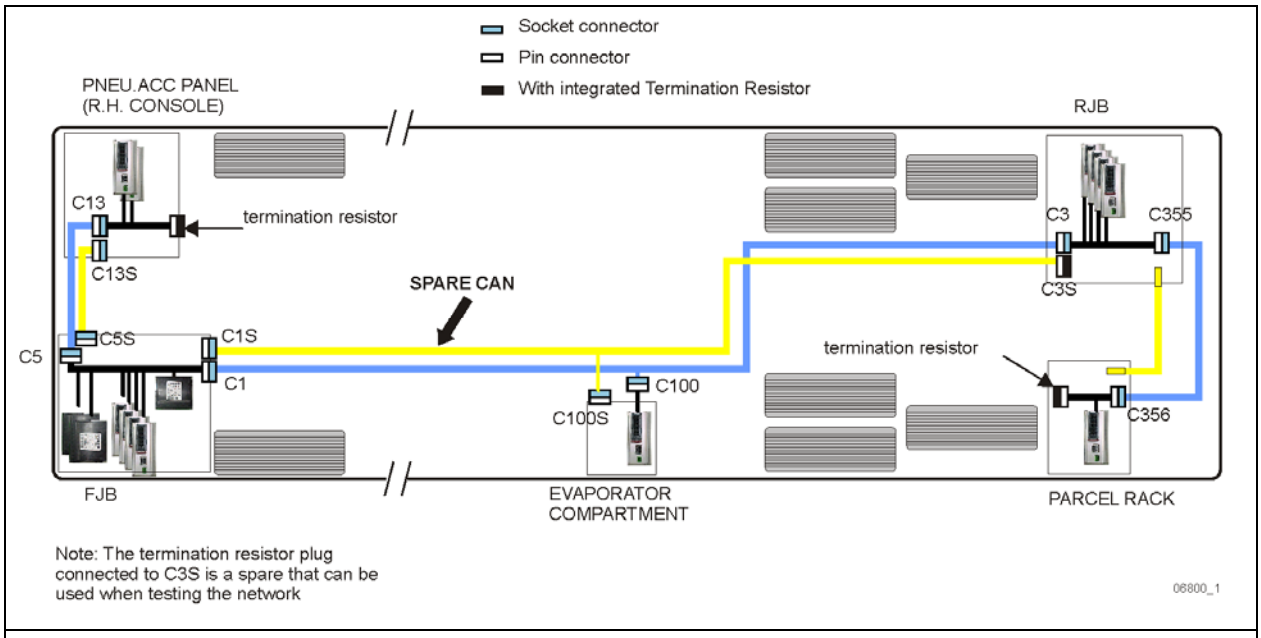

If all 17 modules (A41 to A57) are showed as Not Responding and Active Fault, the problem could be:

- A short circuit somewhere on the DL0H, DL0L (BBUS MUX) network.
- The network is completely open circuit. That means none of the two termination resistors are connected.

Several simple tests can be done to locate the problem.

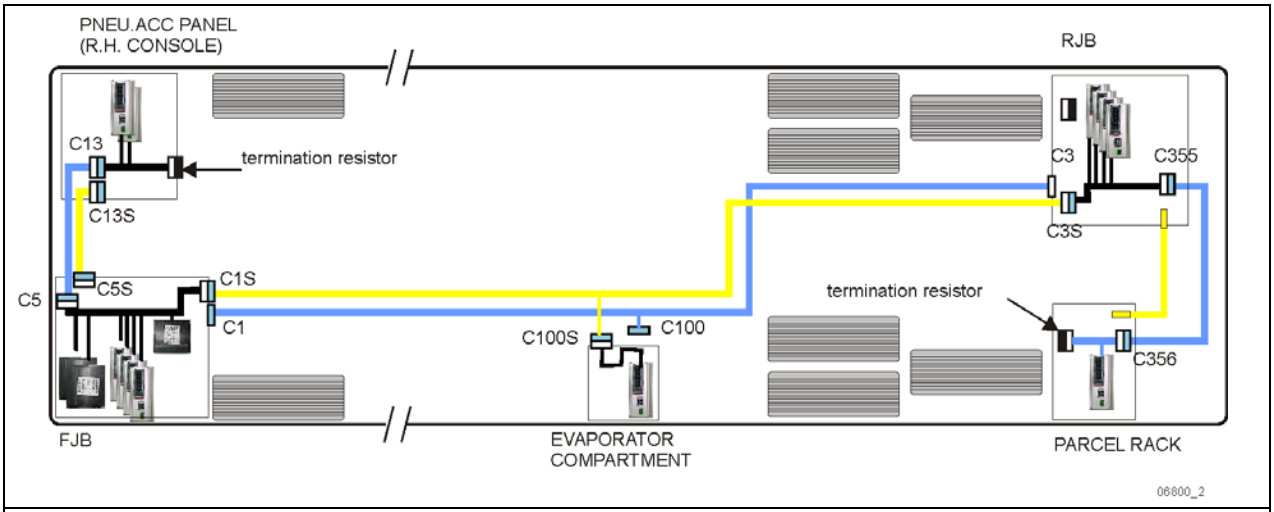

Use the spare "FJB to RJB" CAN

FJB: disconnect C1 and connect C1 pin housing to C1S socket housing.

RJB: disconnect C3 and connect C3 socket housing to C3S pin housing.

5th baggage compartment: disconnect C100 and connect C100 pin housing to C100S socket housing.

NOTE

All modules including Wake-up modules and MCM have to be powered OFF prior to probe the DL0 (BBUS MUX) lines with an ohmmeter.

Probing the resistance between the DL0H and DL0L wire is a useful method to localize short circuits or open circuit on the DL0 (BBUS MUX) network. However, when doing so, make sure none of the modules connected to the DL0 (BBUS MUX) line are powered, including wake-up powered modules and battery direct supply module (MCM). Otherwise the measured value is invalid and will always show OL (Open Load). This is because the modules are applying a voltage on the DL0 (BBUS MUX) lines and this is fooling the ohmmeter.

Proceed as follow when probing the DL0 (BBUS MUX) line with an ohmmeter in order to get a valid reading:

- Turn ignition key to the OFF position.
- Set the main electrical shut-off switch to the OFF position to turn all Wake-up modules power to OFF.

Trip circuit breakers CB2 and CB6 to remove direct battery power from the MCM.

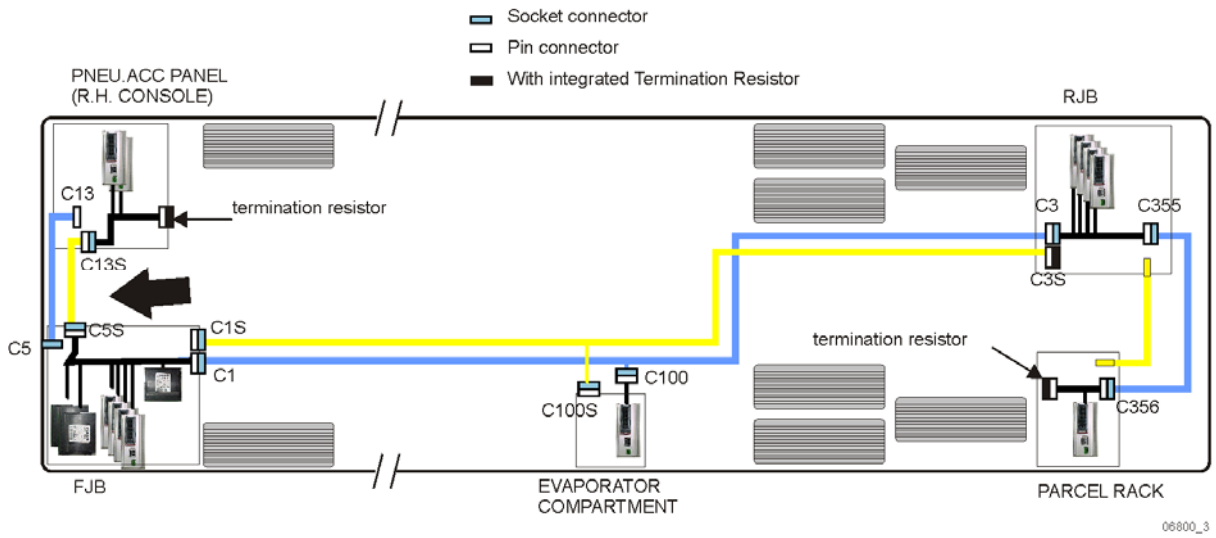

Use the spare "FJB to pneumatic accessory panel" CAN

Pneumatic accessory panel: disconnect C13 and connect C13S pin housing to C13 socket.

FJB: Disconnect C5 and connect C5S socket housing to C5 pin housing.

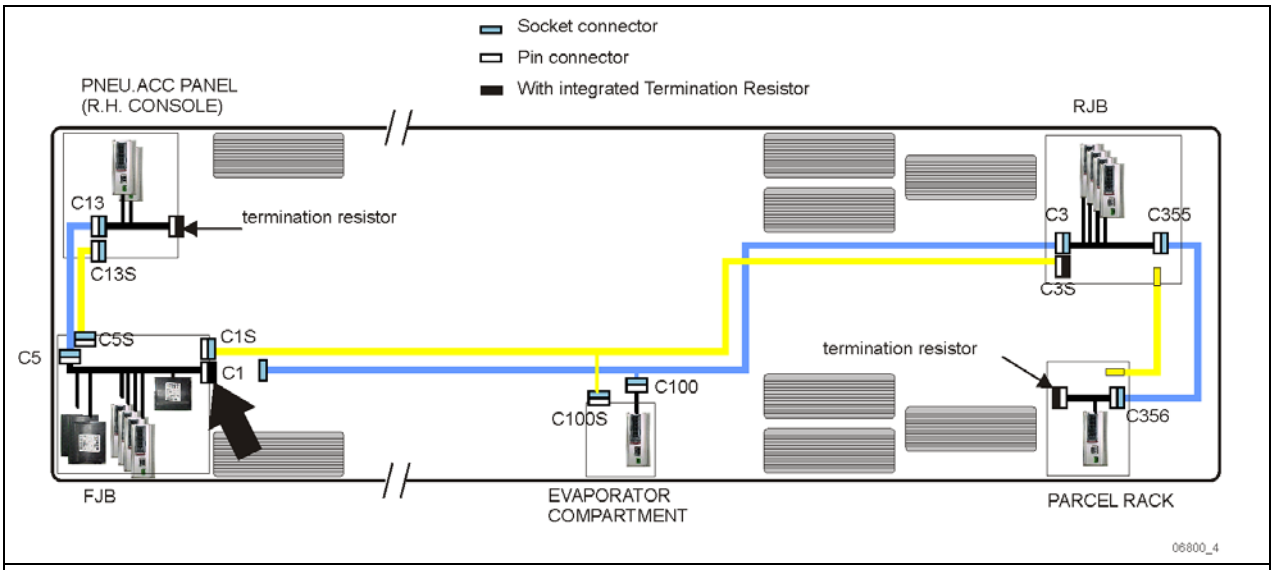

Isolate the front from the rear

Take one of the termination resistors in the RJB.

Disconnect C1 and connect the termination resistor to C1 pin housing.

If all the front modules respond normally, the short circuit is in the rear portion.

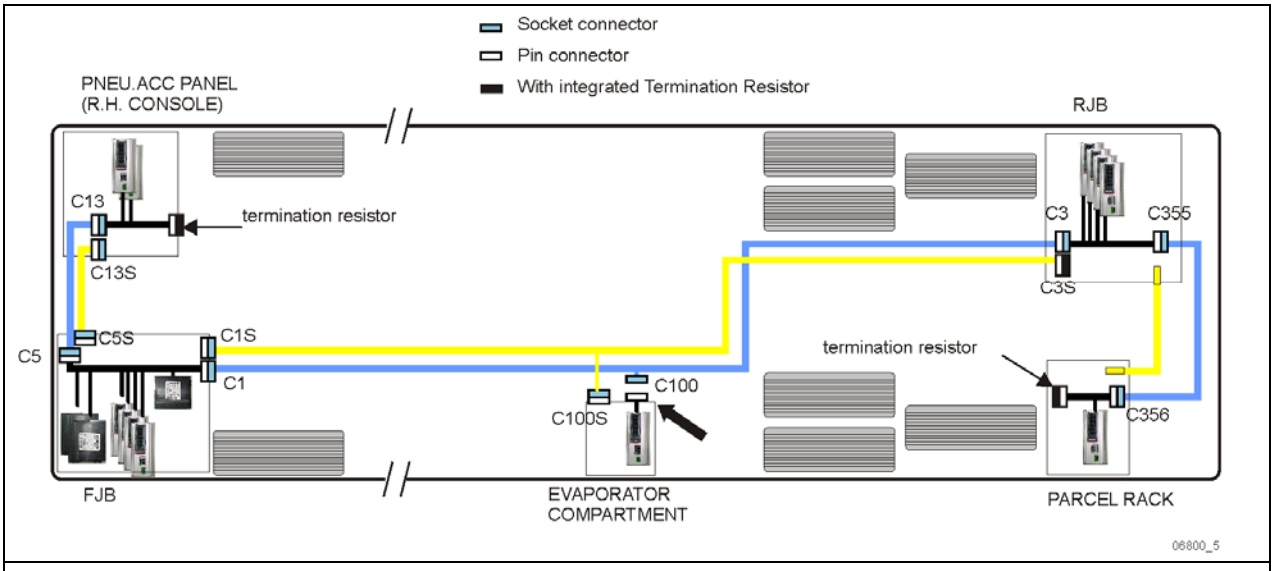

Isolate the evaporator module from the network

Disconnect C100.

No need to connect a termination resistor there since C100 is a stub connection.

If the short circuit problem is in the evaporator panel, all modules except AE54 will respond normally.

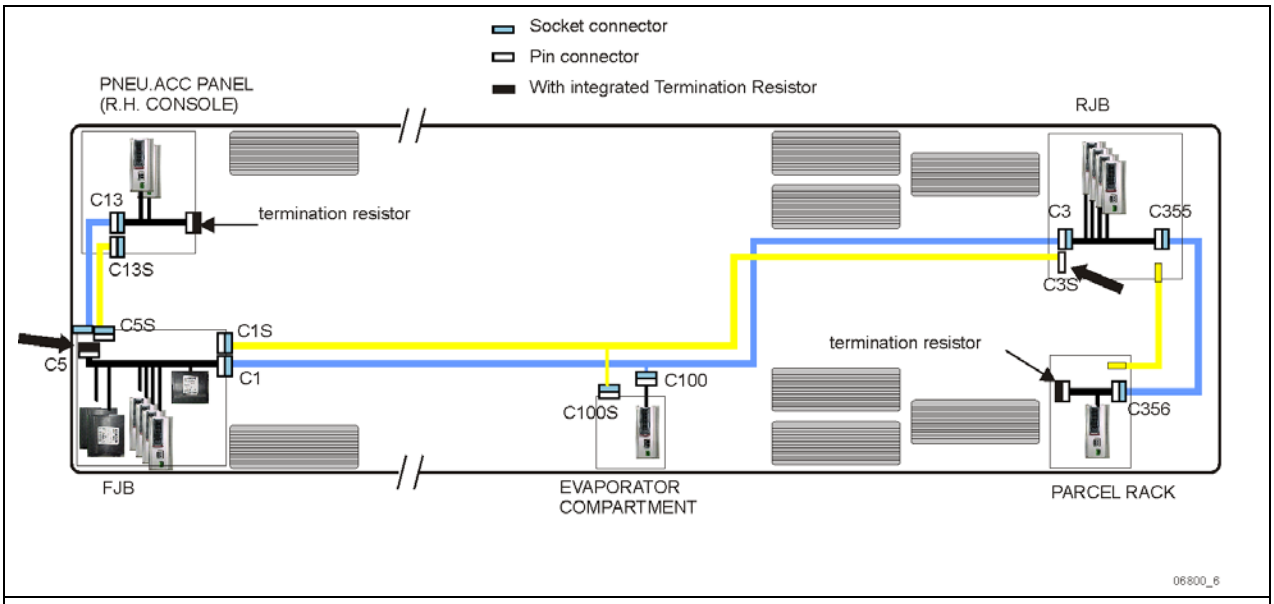

Isolate the pneumatic accessory panel modules from the network

In the FJB, disconnect C5.

Take the spare termination resistor on C3S in the RJB and connect it to C5 pin housing.

If the short circuit problem is in the pneumatic accessory panel all modules except AE47 and AE48 located into the pneumatic accessory panel will respond normally.

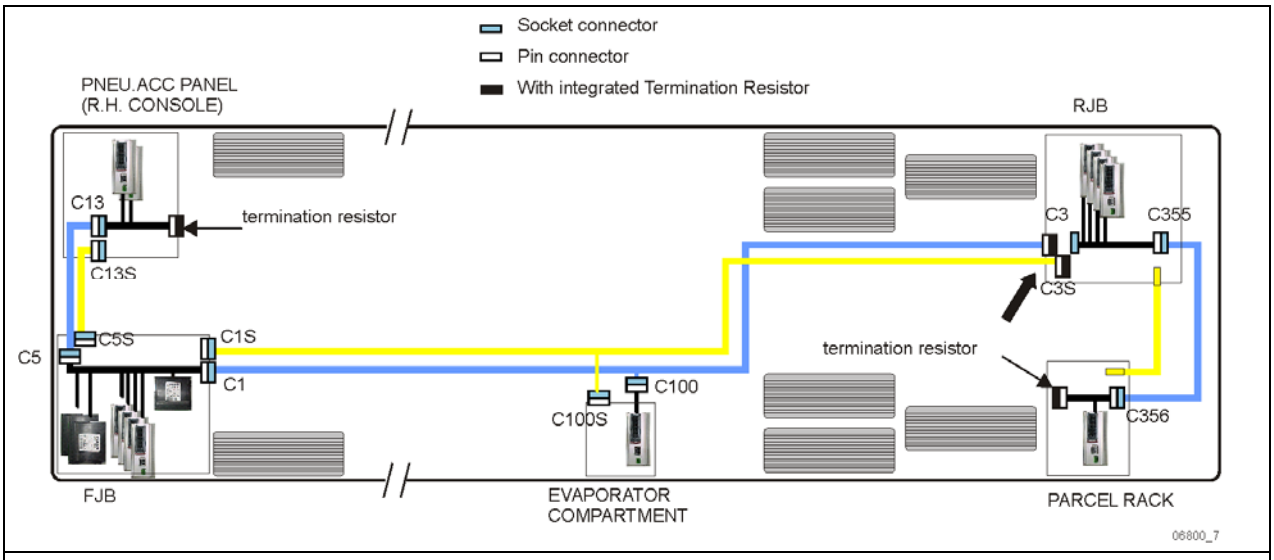

Isolate the RJB from the network

Disconnect C3 Plug and connect the termination resistor into C3 pin housing.

If the short circuit problem is in the RJB or downstream, all front modules + the evaporator module will respond normally.

The same process can be for the parcel rack module.

DL0 (BBUS MUX) wires are not like other common electrical wires.

- Maintaining a proper wire twisting is important. The two yellow and green wires must be twisted and in close contact all along the network to maintain the transmission line impedance.
- A slack handmade twisting is not acceptable.
- There should be no more than 50 mm (2 inches) without twist at the connection points.

We recommend replacing the DL0 (BBUS MUX) harnesses instead of trying to repair them.

3.8 TROUBLESHOOTING

Problem/Symptom	Probable Causes	Actions
Vehicle does not Start	The Engine Stop pushbutton located on the rear start panel is depressed Main electrical shut-off switch is in the OFF position	1. Pull or twist the Engine Stop pushbutton to place it in normal operating position, check that the main electrical shut-off switch is in the ON position and retry cranking from the ignition switch 2. Start the vehicle from the engine compartment using the rear start button
	DL0 (BBUS MUX) network problem (Multiplex) Module AE53 not powered or is defective Engine ECM does not receive the ignition signal Engine ECM is not powered	If the vehicle does not start from the rear: 1. Verify that module A53 is powered: a) Check the SYSTEM DIAGNOSTIC menu of Driver Information Display (DID). Select FAULT DIAGNOSTIC and ELECTRICAL SYSTEM. The message “No Response ModA53, Active”, indicates a power problem on the module or a DL0 (BBUS MUX) network problem. b) Check / reset circuit breaker CB5 c) Check / replace fuse F65 d) Probe gray connector on module to see if it is powered. 2. Verify that the engine ECM is powered and get the ignition signal a) Check / reset circuit breaker CB8 Check / replace fuse F74 b) Check / reset circuit breaker CB2 Check / replace fuse F78

Problem/Symptom	Probable Causes	Actions
None of the Multiplexed functions are operating, including the basic limp-home functions (door opening, flashers, wipers in speed 1) “FLIP REAR BREAKER TO INITIATE I/O MODULES PROGRAMMING” pop-up message appears in the DID *Note: The sunshades are still functioning since these are not multiplexed*	The program version in the MCM is different than the program in the I/O modules and the MCM is forcing all I/O modules to stay inactive	1. Engage the auto-programming of the I/O modules: Turn the ignition key to the ON position, trip and reset circuit breaker CB6. 2. The DID indicates "MUX AUTOPROGRAMMING I/O MODULE PLEASE WAIT" until the reprogramming is complete.
Many secondary functions (not essential for driving) not functioning (interior lighting, driver's area lighting, wiper speed 2 and intermittent). Marker lights and clearance lights are turned ON when setting ignition to the ON position.	The MCM module does not receive 24 V power. The DL0 (BBUS MUX) network is not working. It could be caused by a short on the network, an open circuit, a problem with the MCM or the MCM being disconnected from the network.	1. Check / reset circuit breaker CB6. Check / replace fuse F1 2. Operate in limp-home mode by starting the vehicle from the engine compartment (REAR START). All functions essential to drive are available To close and lock the door, pull the door manually up to its closed position and it will lock by itself. The door opening button is still functioning
No temperature control in the passenger area Passenger temperature display indicates two dashes "--"	Problem with the temperature sensor located in the evaporator compartment air intake or the sensor wiring	Instruct the driver to manually control the temperature by playing with the passenger set point. Set above 22°C (72°F) to heat and below 22° C (72°F) to cool

Problem/Symptom	Probable Causes	Actions
Entrance door does not open nor close using the control buttons Defroster fan not functioning Windshield wipers not functioning in speed 1 or intermittent	Module AE47 is not powered or is faulty	1. Check the SYSTEM DIAGNOSTIC menu of Driver Information Display (DID). Select FAULT DIAGNOSTIC and ELECTRICAL SYSTEM. The message “No Response ModA47, Active” indicates a power problem on the module. (A DL0 (BBUS MUX) network problem would show the same message but doesn't produce these symptoms). 2. Check / reset circuit breaker CB1 3. Check / replace fuse F45 4. Probe gray connector on module to see if it is powered. 5. Use the air release valves near the entrance door and in the front service compartment to lock / unlock the door
Windshield wipers not functioning in speed 1 or intermittent	No power on R27	Check CB48 (VECF)
HVAC condenser fans not functioning in speed 1	Circuit breaker CB5 tripped	Check / reset circuit breaker CB5
HVAC condenser fans not functioning in speed 2	Circuit breaker CB5 tripped	Check / reset circuit breaker CB5 Check / replace fuse F135
Windshield washer not functioning Windshield upper section de-icing system not functioning	Module AE44 is not powered or is faulty	1. Check the SYSTEM DIAGNOSTIC menu of Driver Information Display (DID). Select FAULT DIAGNOSTIC and ELECTRICAL SYSTEM. The message “No Response ModA44, Active” indicates a power problem on the module. (A DL0 (BBUS MUX) network problem would show the same message but doesn't produce these symptoms). 2. Check / reset circuit breaker CB1 3. Check / replace fuse F44 4. Probe gray connector on module to see if it is powered.

Problem/Symptom	Probable Causes	Actions
Defroster fan is functioning but no heat or cooling available in the driver area.	Module AE47 is not powered or is faulty	1. Check the SYSTEM DIAGNOSTIC menu of Driver Information Display (DID). Select FAULT DIAGNOSTIC and ELECTRICAL SYSTEM. The message “No Response ModA47, Active” indicates a power problem on the module. (A DL0 (BBUS MUX) network problem would show the same message but doesn't produce these symptoms). 2. Check / reset circuit breaker CB1 3. Check / replace fuse F45 4. Probe gray connector on module to see if it is powered.
Low beam headlights and front flasher on left side not functioning Electric horn not functioning	Module AE46 is not powered or is faulty	1. Check the SYSTEM DIAGNOSTIC menu of Driver Information Display (DID). Select FAULT DIAGNOSTIC and ELECTRICAL SYSTEM. The message “No Response ModA46, Active” indicates a power problem on the module. (A DL0 (BBUS MUX) network problem would show the same message but doesn't produce these symptoms). 2. Check / reset circuit breaker CB10 3. Check / replace fuse F19 4. Probe gray connector on module to see if it is powered.
Low beam headlights and flasher on right side not functioning	Module AE48 is not powered or is faulty	1. Check the SYSTEM DIAGNOSTIC menu of Driver Information Display (DID). Select FAULT DIAGNOSTIC and ELECTRICAL SYSTEM. The message “No Response ModA48, Active” indicates a power problem on the module. (A DL0 (BBUS MUX) network problem would show the same message but doesn't produce these symptoms). 2. Check / reset circuit breaker CB10 3. Check / replace fuse F21 4. Probe gray connector on module to see if it is powered.

Problem/Symptom	Probable Causes	Actions
Rear flashers not functioning Stoplights and center stoplights not functioning	Module AE51 is not powered or is faulty	1. Check the SYSTEM DIAGNOSTIC menu of Driver Information Display (DID). Select FAULT DIAGNOSTIC and ELECTRICAL SYSTEM. The message “No Response ModA51, Active” indicates a power problem on the module. (A DL0 (BBUS MUX) network problem would show the same message but doesn't produce this symptom). 2. Check / reset circuit breaker CB8 3. Check / replace fuse F107 4. Probe gray connector on module to see if it is powered.
Engine is overheating and radiator fans do not engage	Module AE52 or AE49 is not powered or is faulty	1. Check the SYSTEM DIAGNOSTIC menu of Driver Information Display (DID). Select FAULT DIAGNOSTIC and ELECTRICAL SYSTEM. The message “No Response ModA52/ ModA49, Active” indicates a power problem on the module. (A DL0 (BBUS MUX) network problem would show the same message but doesn't produce this symptom). 2. Check circuit breaker CB5 3. Check / replace fuse F133, F134 4. CB201-CB208
The A/C compressor clutch does not engage	Module AE54 is not powered or is faulty	5. Check the SYSTEM DIAGNOSTIC menu of Driver Information Display (DID). Select FAULT DIAGNOSTIC and ELECTRICAL SYSTEM. The message “No Response ModA54, Active” indicates a power problem on the module. (A DL0 (BBUS MUX) network problem would show the same message but doesn't produce this symptom). 6. Check / reset circuit breaker CB5 7. Check / replace fuse F135 8. Probe gray connector on module to see if it is powered.

Problem/Symptom	Probable Causes	Actions
Evaporator fan not functioning	Circuit breaker CB3 tripped Module AE54 is not powered or is faulty	1. Check circuit breaker CB3 2. Check relay R12 3. Check the SYSTEM DIAGNOSTIC menu of Driver Information Display (DID). Select FAULT DIAGNOSTIC and ELECTRICAL SYSTEM. The message “No Response ModA54, Active” indicates a power problem on the module. (A DL0 (BBUS MUX) network problem would show the same message but doesn't produce this symptom). 4. Check / reset circuit breaker CB5 5. Check / replace fuse F135 6. Probe gray connector on module to see if it is powered.
HVAC condenser fans not functioning in speed 1	Module AE54 is not powered or is faulty	1. Check the SYSTEM DIAGNOSTIC menu of Driver Information Display (DID). Select FAULT DIAGNOSTIC and ELECTRICAL SYSTEM. The message “No Response ModA54, Active” indicates a power problem on the module. (A DL0 (BBUS MUX) network problem would show the same message but doesn't produce this symptom). 2. Check / reset circuit breaker CB5 3. Check / replace fuse F135 4. Check / replace fuse F141-F144 5. Probe gray connector on module to see if it is powered.
Sound system not functioning	Circuit breaker CB11 tripped	1. Check CB11 2. Check / replace fuse F148, F200
Fire alarm telltale light and audible alarm always ON and there is no fire or high temperature in the engine compartment	Short-circuited fire sensor or defective sensor	Prior to start the vehicle, cycle the ignition key to the ON position, OFF position and then ON position again and then start the vehicle. This will deactivate the fire alarm function. This has to be repeated each time the vehicle is re-started

Problem/Symptom	Probable Causes	Actions
The vehicle is parked and the electrical horn is activated to indicate a fire in the engine compartment but there is no fire	Short-circuited fire sensor or defective sensor	Cycle the ignition key between the ON and OFF position twice within 3 seconds. This will deactivate the fire alarm function. This has to be repeated each time the vehicle is parked
A single light, a group of LED lights or another function of the vehicle is not functioning	The multiplex outputs are protected in current by an internal “soft-fuse”. When an output is shorted, it turns OFF and stays OFF until the "soft-fuse" is reset	Turn the ignition key to the OFF position and turn to the ON position again. This resets all "soft –fuses"
No backlighting in the instrument cluster	Circuit breaker CB10 is tripped or fuse F10/F29 blown	Check circuit breaker CB2, CB10 Check / replace fuse F10, F29 Check / replace relay R22, R23
The radiator/CAC fans do not function and the engine is overheating		You can manually engage the radiator/CAC fans half speed (50%) or full speed (100%). 1. On the Driver Information Display, select DIAGNOSTICS menu. Select VEHICLE TESTS submenu and then ACTIVATE RADIATOR FAN SPEED 50% or ACTIVATE RADIATOR FAN SPEED 100%. 2. The DID status line will show TEST to confirm the forced activation of the radiator fans. To cancel, turn the ignition switch to the OFF position or press ESCAPE button, select STOP TEST submenu and then press ENTER button twice. TEST will disappear from the DID status line.

3.9 DRIVER INFORMATION DISPLAY LIMP-HOME MODE

In case of malfunction of unavailability of the steering wheel UP, DOWN, ENTER & ESCAPE buttons, it is still possible to scroll through the DID menus using the multi-function lever.

To activate the DID limp-home mode, press and hold the courtesy blinkers button for 3 seconds. The limp-home mode will cancel if no switch is pressed before a 1 minute delay after activation.

Limp-home mode action	
Activate RH flasher	UP
Activate LH flasher	DOWN
Activate headlights call switch	ENTER
Press courtesy blinkers button	ESCAPE

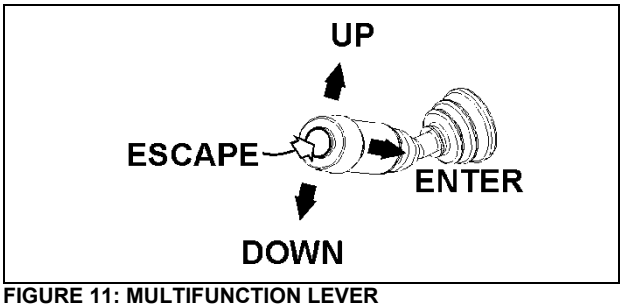

FIGURE 11: MULTIFUNCTION LEVER

3.10 ESSENTIAL FUNCTIONS TO OPERATE THE VEHICLE

Even with a defective MCM (Chassis Electronic Control Module) or a DL0 (BBUS MUX) network problem, essential base functions are maintained to rear start the vehicle from the engine compartment and drive in a secure manner.

However, many secondary functions are lost. In this case, the following directives must be followed.

- Never connect a battery charger when the ignition is at the ON position on a vehicle with a DL0 (BBUS MUX) defective or certain functions will start up by themselves,
- Disconnect the charger before starting the vehicle, if not the default functions will not activate,
- If the default mode does not activate, try to turn the ignition OFF while ensuring that no charger is connected and then restart the vehicle.

3.10.1 Available Functions

- Startup: Turn on the ignition in the driver's area and rear start the vehicle from the engine compartment,
- Opening the door: Functions normally,
- Closing the door: Manually pull on the door and it will lock automatically,
- Windshield wipers: Wipers functions at 1st speed only,
- Headlights: Low beams only,
- Directional signals: Rear and front only,
- Stoplights: 2 upper stoplights + high-mounted stoplight are functional,
- HVAC: Functional with set point fixed at 70°F (22°C), evaporator and condenser fixed at speed 1, defroster fixed at speed 4.

3.11 LOWER PRIORITY MODULES FOR BREAKDOWN SERVICE

Modules AE42 (I/O-EA) and AE43 (I/O-EB) affect lower priority functions. These modules can therefore be used as spare parts for breakdown service while on the road.

Functions lost if AE42 is removed and used as spare part:

- Kneeling system,

Functions lost if AE43 is removed and used as spare part:

- Cruise control & ACB,
- Baggage compartment door luck,
- Door ajar,
- Tire Pressure Monitoring System,

3.12 MULTIPLEX MODULES

3.12.1 MCM

The MCM plays the role of interface between the engine ECM, the transmission ECU, the telltale panel module and other I/O-EA, I/O-EB modules. When a multiplex module is being replaced, the MCM will inform the new module of its role and function accordingly to the vehicle options. The MCM keeps the back-up program of the vehicle specific multiplex program. So, a specific MCM cannot be removed from a vehicle and installed on another vehicle.

3.12.2 I/O-EA

I/O-EA modules receive inputs and control outputs. I/O-EA's are used for all outputs of 1 amp or less.

3.12.3 I/O-EB

I/O-EB modules receive inputs and control outputs. I/O-EB's are used for outputs up to 30 amps.

3.13 MULTIPLEX MODULES REPLACEMENT

3.13.1 Replacing I/O-EA Or I/O-EB Modules

I/O-EA, I/O-EB modules can be replaced and reprogrammed without having to connect a computer to the vehicle.

Set the ignition switch to the ON position and leave it in that position at all time while performing this procedure.

1. On rear electrical junction panel, trip circuit breaker CB6.
2. Replace the defective module.
3. Reset circuit breaker CB6. Doing so will initiate the I/O auto programming.
4. The DID indicates "MUX AUTOPROGRAMMING I/O MODULE PLEASE WAIT" until the reprogramming is complete unless a higher priority message must be displayed. If this is the case, press ESCape button repeatedly to acknowledge the higher priority messages.
5. Check the **Diagnostics** menu of the Driver Information Display (DID). Select **Fault Diagnostics** and **Electrical System**. Verify the fault message to be certain the module is reprogrammed. If the module is not reprogrammed, the message “Axx Not Responding” appears where Axx is the module number (Ex: A41, A42…etc).

NOTE

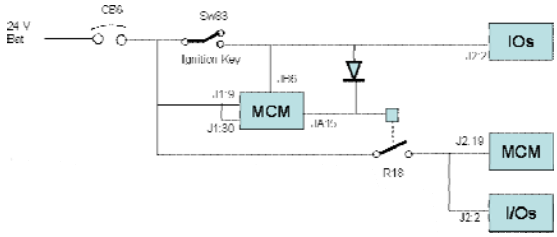

JB6 is a wake-up pin. JA15 output remains active for 5 minutes after JB6 is inactive.

When initiating reprogramming:

Switch SW83 (ignition key) remains closed, providing 24-volt on JB6, I/O modules and R18. All modules get power.

CB6 is tripped and reset which is forcing MCM reboot.

When resetting CB6, all modules get power, MCM goes into “start mode”. I/O modules needing new program will request reprogramming to MCM while in “start mode”.

3.13.2 Replacing the MCM Module

The MCM must be reprogrammed using a laptop computer equipped with VPG software, connected to C226 (DB9 connector) found in the front electrical compartment. However, an updated vehicle multiplex program saved on a laptop computer can be uploaded into the MCM module without the need of VPG software.

1. Set the ignition key to the ON position and leave it in that position at all time while performing this procedure.
2. On rear electrical junction panel, trip circuit breaker CB6.
3. Replace the module.
4. Reset circuit breaker CB6.
5. The vehicle specific program needs to be uploaded in the MCM.

3.13.3 Uploading the vehicle specific multiplex program into the MCM

A laptop computer running Windows XP or Windows 7 must be connected to the RS232 serial port DB9 connector (identified C226) found on the front service compartment electrical panel. Please contact your Prevost Service Representative in order to get the vehicle specific multiplex program and upload

procedure. Save the specific multiplex program on your laptop computer.

WARNING

WHEN UPLOADING A NEW MUX SOFTWARE INTO THE MCM …

Cooling fans WILL start running for a short while.

Keep hands away from cooling fans or keep the radiator door closed.

4. ELECTRICAL COMPARTMENTS

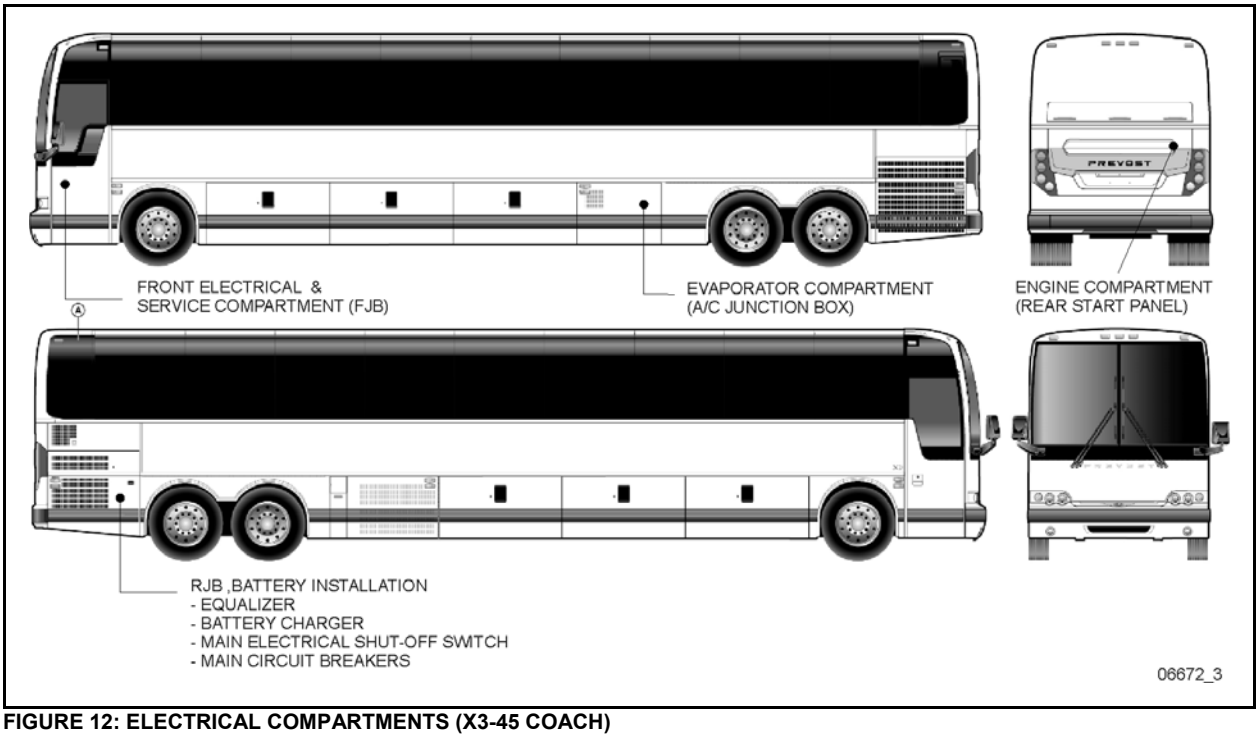

FIGURE 12: ELECTRICAL COMPARTMENTS (X3-45 COACH)

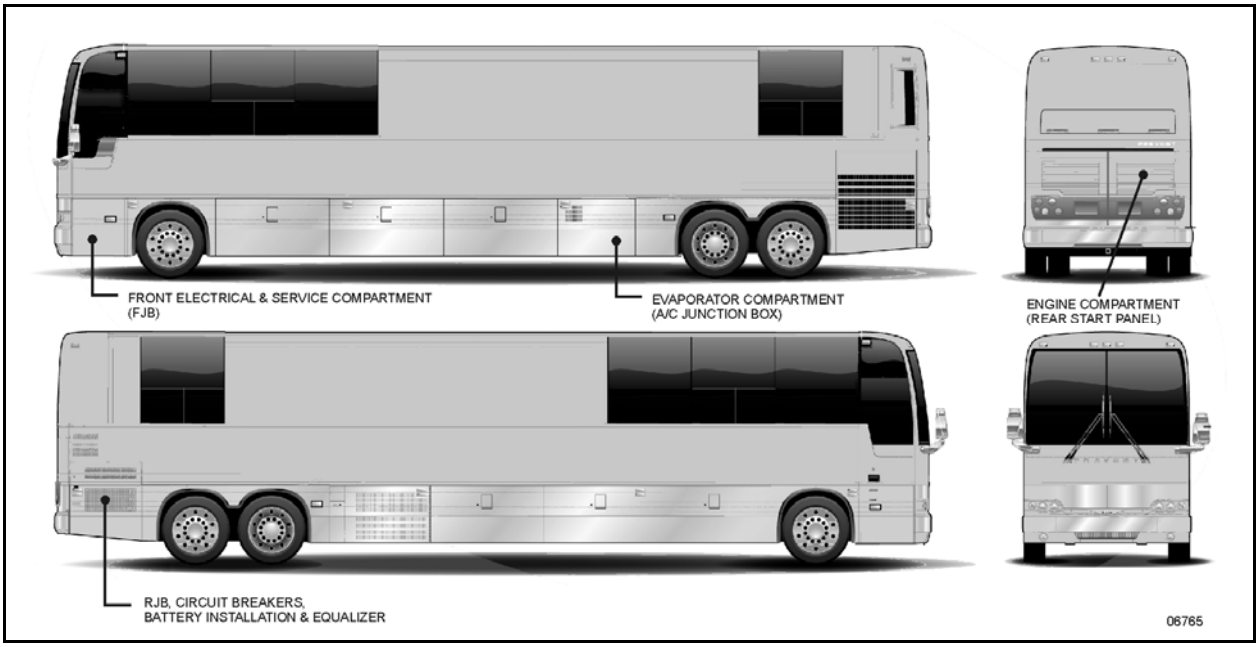

FIGURE 13: ELECTRICAL COMPARTMENTS (X3-45 VIP)

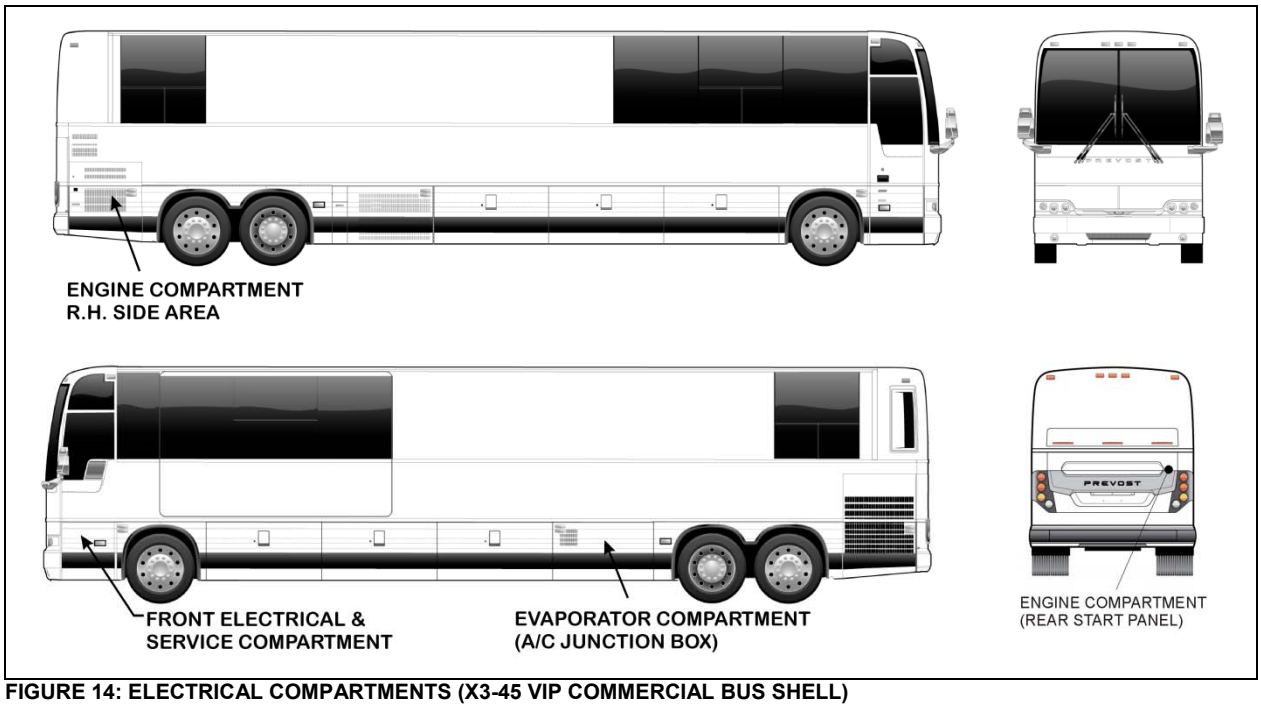

FIGURE 14: ELECTRICAL COMPARTMENTS (X3-45 VIP COMMERCIAL BUS SHELL)

4.1 MAINTENANCE

A corrosion inhibitor has been sprayed on certain electrical components in order to protect them from corrosion. Refer to procedure SAV00002E at the end of this section for recommended products and where they are used.

CAUTION

Never put grease or other product on the multiplex modules connector terminals.

DANGER

Use sprayed sealer in a well-ventilated area. Do not smoke. Avoid prolonged contact with skin and breathing of spray mist.

4.2 BATTERY INSTALLATION & REAR JUNCTION BOX

The battery installation and rear junction box (RJB) (Figure 15) are accessible from the engine compartment curb-side door.

The batteries are housed and secured on the engine R.H side deck. The battery posts and connections are protected by a watertight cover. The cover is fitted with a built-in vent. The cover can be unlocked and then removed with the use of the same type of hardware that allows opening and closing of the rear fender. Refer to paragraph *5.5 Battery Removal and Installation* for the battery removal procedure.

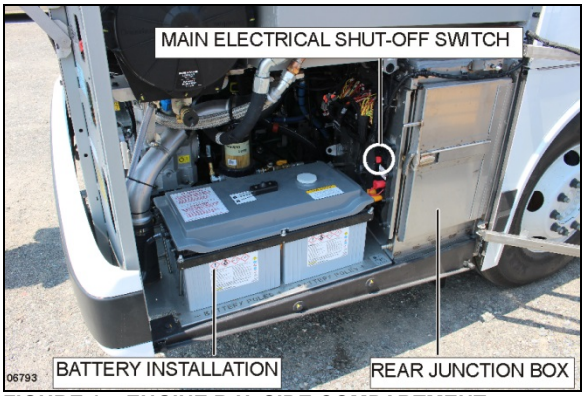

FIGURE 15: ENGINE R.H. SIDE COMPARTMENT

4.3 REAR JUNCTION BOX (RJB)

The main power compartment panel provides access to the following:

- Rear 12VD, 24VD junction blocks;
- Main circuit breakers;
- AE49, AE50, AE51, AE52 I/O-EB Multiplex modules;
- Vehicle Electrical Center Rear (VECR);
- Master relay R1;
- 12V ignition relay R3;
- Starter relay;
- Relays and fuses;
- Battery equalizer;
- 12VD & 24 VD current sensors;

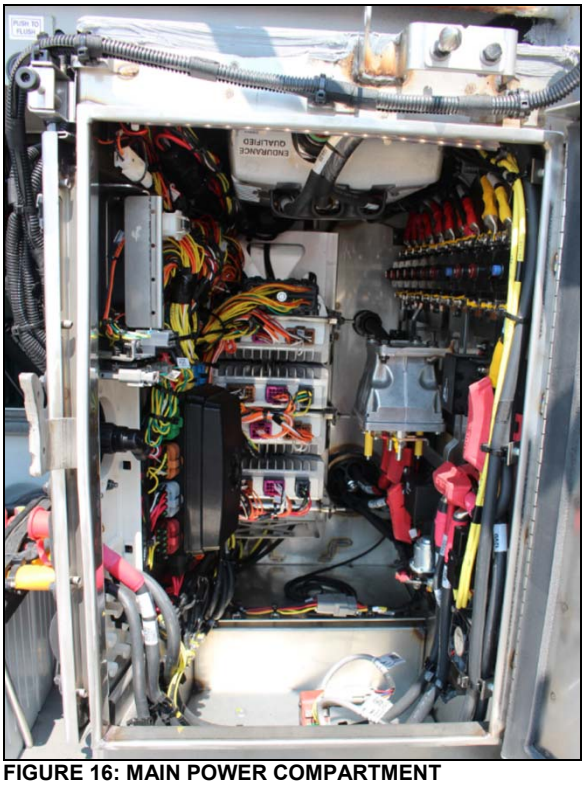

FIGURE 16: MAIN POWER COMPARTMENT

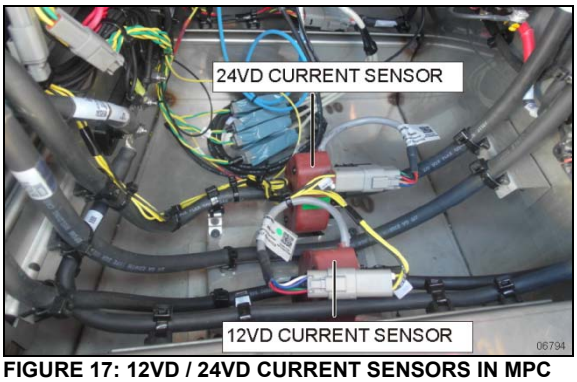

FIGURE 17: 12VD / 24VD CURRENT SENSORS IN MPC

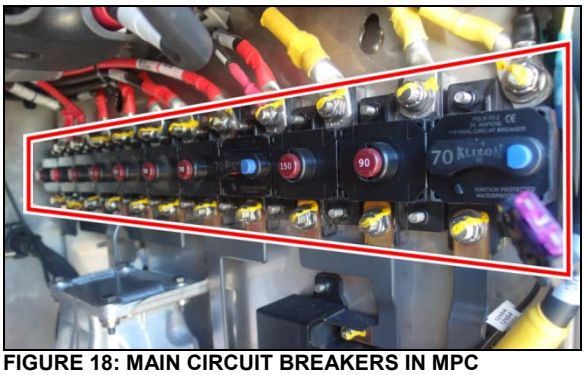

FIGURE 18: MAIN CIRCUIT BREAKERS IN MPC

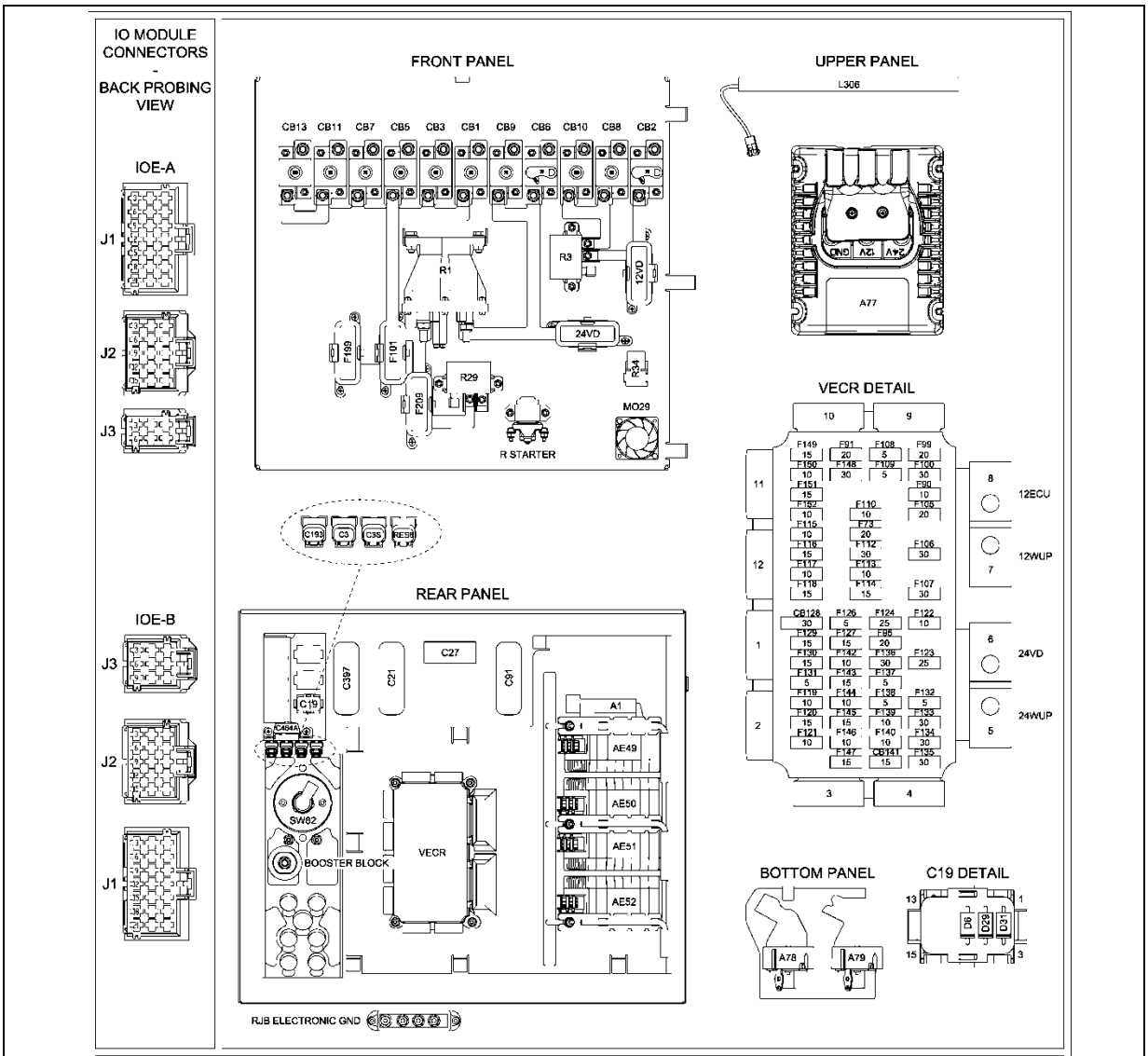

BREAKER	RATING	DESCRIPTION	FUSE	RATING	DESCRIPTION	FUSE	RATING	DESCRIPTION	FUSE	RATING	DESCRIPTION
CB1	90	24WUP DIST. FJB	F73	20	ENGINE ECU VOLVO	F113	10	SPARE FUSE	F129	15	SPARE FUSE
CB2	70	12ECU DIST. FJB & RJB	F90	10	UREA SYSTEM	F114	15	SPARE FUSE	F130	15	SPARE FUSE
CB3	90	HVAC (EVAPORATOR)	F91	20	ENGINE ECU VOLVO	F115	10	SPARE FUSE	F131	5	CUSTOMER POWER
CB5	90	24WUP DIST. RJB	F96	20	UREA SYSTEM	F116	15	SPARE FUSE	F132	5	MULTIPLEX POWER
CB6	70	24VD DIST. RJB & WCL	F99	20	ENGINE ECU VOLVO	F117	10	SPARE FUSE	F133	30	MULTIPLEX POWER
CB7	70	HVAC (CONDENSOR)	F100	30	ENGINE ECU VOLVO	F118	15	SPARE FUSE	F134	30	MULTIPLEX POWER
CB8	90	12WUP DIST. RJB	F101	300	MASTER RELAY POWER	F119	10	SPARE FUSE	F135	30	MULTIPLEX POWER
CB9	70	BATTERY CHARGER	F105	20	SPARE FUSE	F120	15	SPARE FUSE	F136	30	MULTIPLEX POWER
CB10	150	12WUP DIST. FJB	F106	30	MULTIPLEX POWER	F121	15	CUSTOMER POWER	F137	5	BATTERY EQUALIZER
CB11	50	SOUND SYSTEM	F107	30	MULTIPLEX POWER	F122	10	SPARE FUSE	F138	5	READING LAMPS & CHIME
CB13	150	INVERTER(S)	F108	5	RJB OBD CONN.	F123	25	WATER PREHEATER	F139	10	ALTERNATORS
CB128	30	24VD DIST. FJB	F109	5	ENG. CMPT DOOR SENSORS	F124	25	WATER PREHEATER	F140	10	SPARE FUSE
CB141	15	SPARE FUSE	F110	10	TRANSMISSION ECU	F126	5	AIR PREHEATER & REFRIG. FILL	F142	10	SPARE FUSE
			F112	30	TRAILER INTERFACE	F127	15	WATER PUMP			

FUSE	RATING	DESCRIPTION	RELAY	DESCRIPTION	MODULES	DESCRIPTION	CONNECTOR	DESCRIPTION
F143	15	SPARE FUSE	R1	MASTER RELAY	A1	TRANSMISSION ECU	C3	DL0 (BBUS)
F144	10	SPARE FUSE	R3	12V IGN. & ACC. RELAY	AE49	MULTIPLEX IOEB MODULE	C19	DIODES CONN.
F145	15	SPARE FUSE	R29	AIR PREHEATER	AE50	MULTIPLEX IOEB MODULE	C21	TRANS. FR/RR - RJB
F146	10	SPARE FUSE	R34	12V RR ENGINE ECU	AE51	MULTIPLEX IOEB MODULE	C27	TRANS. FR/RR - RJB
F147	15	CUSTOMER POWER	R STARTER	ENGINE STARTER RELAY	AE52	MULTIPLEX IOEB MODULE	C91	ENGINE ACC. - RJB
F148	30	SOUND SYSTEM			A77	BATTERY EQUALIZER	C193	DL1 (J1939)
F149	15	SPARE FUSE	DIODE	DESCRIPTION	A78	24VD CURRENT SENSOR	C397	ENGINE CRADLE - RJB
F150	10	SPARE FUSE	D6	MASTER RELAY	A79	12VD CURRENT SENSOR	C464A	OBD CONN.
F151	15	SPARE FUSE	D29	A/C COMP. UNLOADER	VECR	RJB POWER DIST.	CCUST	CUSTOMER POWER
F152	10	SPARE FUSE	D31	A/C COMP. CLUTCH				
F199	300	RADIATOR FANS						
F209	150	PREHEATER VOLVO	RESISTOR	DESCRIPTION	MOTOR	DESCRIPTION	MISC.	DESCRIPTION
			RES6	DL3 (DBUS) TERMINATION	MO29	RJB FAN	L306	CMPT LIGHT
							SW82	CUTOUT SWITCH

REAR JUNCTION BOX - 060304

FIGURE 19: MAIN POWER COMPARTMENT COMPONENTS IDENTIFICATION

4.4 FRONT ELECTRICAL AND SERVICE COMPARTMENT (FJB)

The front electrical and service compartment is located on L.H. side of vehicle, under the driver's window. It contains the following components (Figure 20):

- Front terminal block;
- Master Control Module (MCM);
- Vehicle Electrical Center Front (VECF) and Multiplex Modules;
- Relays and fuses;
- ABS Electronic Control Unit (ECU);
- VECU with Volvo D13 engine;

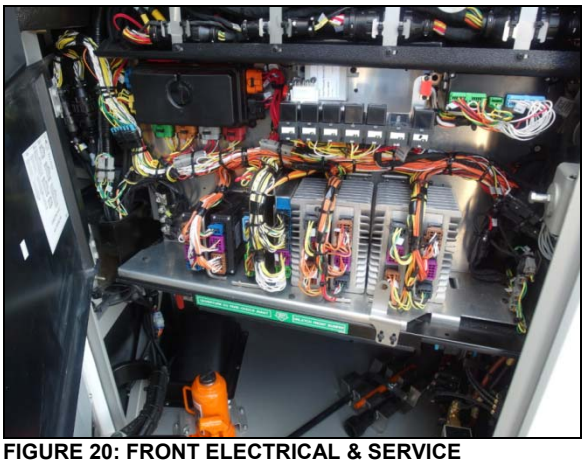

FIGURE 20: FRONT ELECTRICAL & SERVICE COMPARTMENT

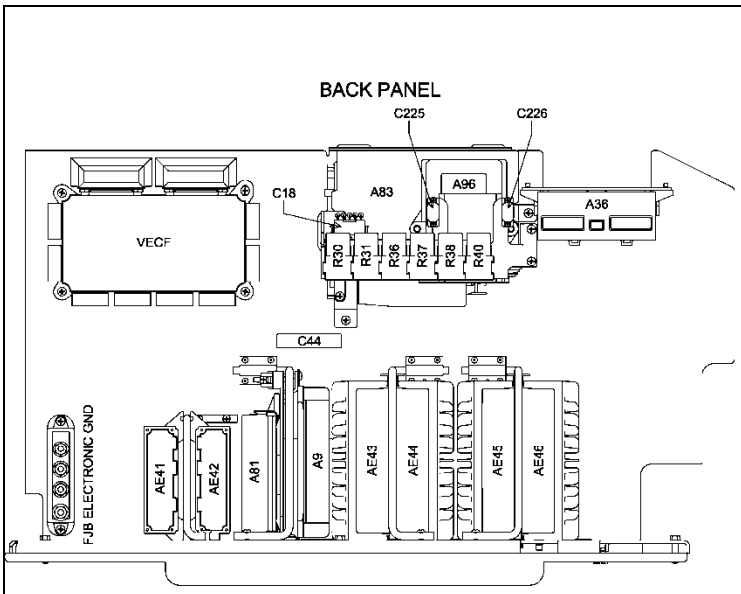

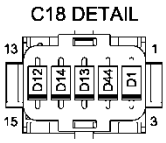

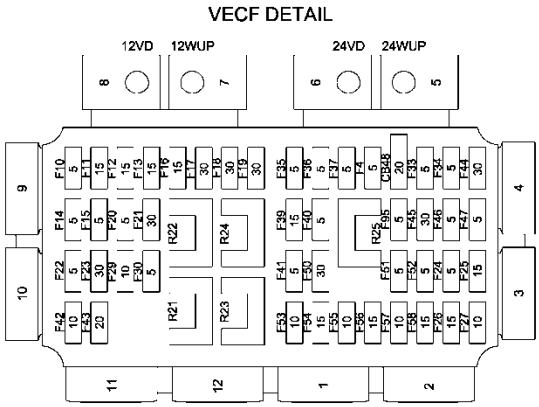

BREAKER	RATING	DESCRIPTION
CB48	20	WIPERS

FUSE	RATING	DESCRIPTION
F4	5	TGW & GSECU POWER
F10	5	OBD CONN. & CLUSTER
F11	15	FIRE EXT. ALARM
F12	15	SPARE FUSE
F13	15	CUSTOMER POWER
F14	5	SPARE FUSE
F15	5	SPARE FUSE
F16	15	CUSTOMER POWER
F17	30	MULTIPLEX POWER
F18	30	MULTIPLEX POWER
F19	30	MULTIPLEX POWER
F20	5	MULTIPLEX POWER
F21	30	MULTIPLEX POWER
F22	5	WIRELESS SYST.
F23	30	ESP ECU
F24	5	CUSTOMER POWER
F25	15	12V POWER OUTLETS
F26	15	SPARE FUSE
F27	10	SPARE FUSE
F29	10	ECU IGNITION
F30	5	ECU IGNITION
F33	5	MULTIPLEX POWER
F34	5	MULTIPLEX POWER
F35	5	MULTIPLEX POWER
F36	5	FRONT START SWITCH
F37	5	HAZARD & EXT. DOOR SW.
F39	15	CUSTOMER POWER
F40	5	AFSS
F41	5	SPARE FUSE
F42	10	ISHIFT SHIFTER
F43	20	ISHIFT TECU
F44	30	MULTIPLEX POWER
F45	30	MULTIPLEX POWER
F46	5	MULTIPLEX POWER
F47	5	MULTIPLEX POWER
F50	30	DEFROSTER FANS
F51	5	DESTINATION SIGN
F52	5	SPARE FUSE
F53	10	CLOCK & FLIP-DN SCREEN
F54	15	SPARE FUSE
F55	10	SPARE FUSE
F56	15	SPARE FUSE
F57	10	SPARE FUSE
F58	15	SPARE FUSE
F95	5	TGW & ISHIFT GSECU

MODULES	DESCRIPTION
A9	ESP MODULE
A36	MULTIPLEX MCM MODULE
AE41	MULTIPLEX IOEA MODULE
AE42	MULTIPLEX IOEA MODULE
AE43	MULTIPLEX IOEB MODULE
AE44	MULTIPLEX IOEB MODULE
AE45	MULTIPLEX IOEB MODULE
AE46	MULTIPLEX IOEB MODULE
A81	VECU - VOLVO D13F
A83	TGW - VOLVO LINK
A96	TPMS ECU
VECF	FJB POWER DIST.

CONNECTOR	DESCRIPTION
C18	DIODES CONN.
C44	DEFROSTER REFRIG. FILL UP
C225	TPMS DOWNLOAD CONN.
C226	COMPUTER - MCM CONN.

RELAY	DESCRIPTION
R21	EMERGENCY CUTOUT
R22	ECU IGNITION
R23	ENGINE SHUTDOWN
R24	ISHIFT ECU
R25	24V IGNITION
R30	12V ENGINE RUN
R31	12V IGNITION
R36	FIRE EXTINGUISHER
R37	ELECTRIC HORN
R38	12V OUTPUTS / LIGHTER
R40	GSECU POWER

DIODE	DESCRIPTION
D1	EMERGENCY CUTOUT RELAY
D12	ELECTRIC HORN
D13	FRONT CLEARANCE LIGHTS
D14	FRONT CLEARANCE LIGHTS
D44	EMERGENCY CUTOUT RELAY

FRONT JUNCTION BOX - 060303

FIGURE 21: FRONT ELECTRICAL & SERVICE COMPARTMENT COMPONENTS IDENTIFICATION

4.5 A/C MODULE

The A/C junction box is located on the evaporator fan housing.

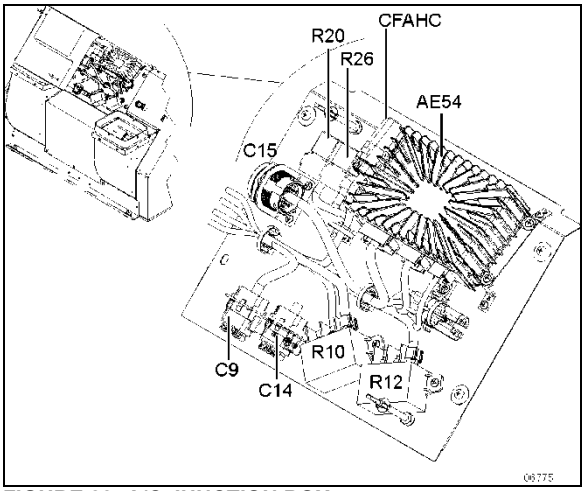

FIGURE 22: A/C JUNCTION BOX

4.6 ENGINE REAR START PANEL

This control panel is located in the R.H. side of engine compartment. This control panel includes the engine STOP push-pull button, the rear start push button switch to start engine from engine compartment as well as the back-up alarm.

When servicing the engine, push the engine STOP button to prevent the engine from being started from the dashboard ignition key or the rear start button. Once servicing is done, pull or twist the button to allow normal engine start. Pressing the engine STOP push-pull button while the engine is running will stop the engine.

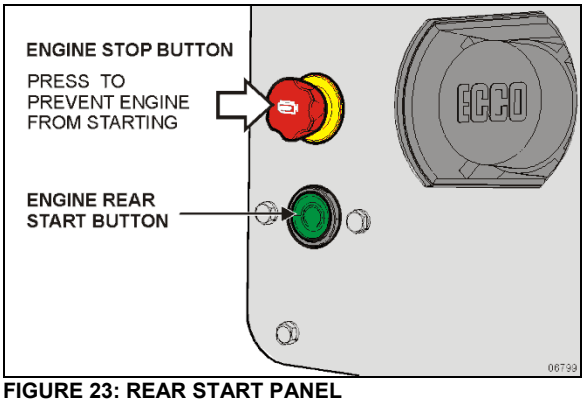

FIGURE 23: REAR START PANEL

4.7 ENTRANCE DOOR & WIPER CONTROL MODULES

To access the entrance door & wiper control panel of the right console, remove the panel under the larger utility compartment at the base of the windshield.

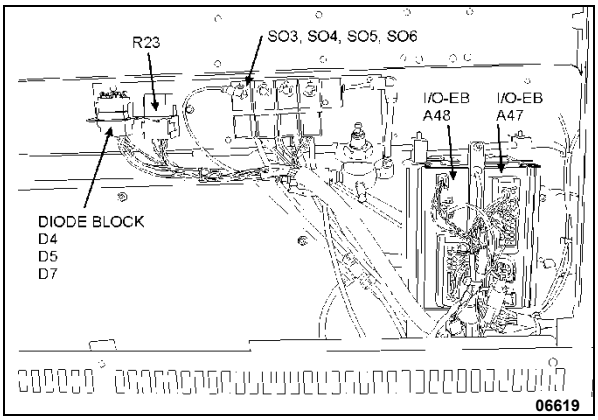

FIGURE 24: ENTRANCE DOOR & WIPER CONTROL PANEL

Entrance Door & Wiper Control Panel			
Multiplex Modules			
AE47	I/O-B	AE48	I/O-B
Relays			
R23	Windshield wipers		
Solenoids			
SO3	Door unlock solenoid valve	SO5	Door opening solenoid valve
SO4	Door unlock solenoid valve	SO6	Door closing solenoid valve
Diodes			
D4	Windshield wipers speed 2	D7	Entrance door
D5	Windshield wipers speed 1		

4.8 PARCEL RACK MODULE

A single I/O B module, AE53 is found at the rear end of the left parcel rack.

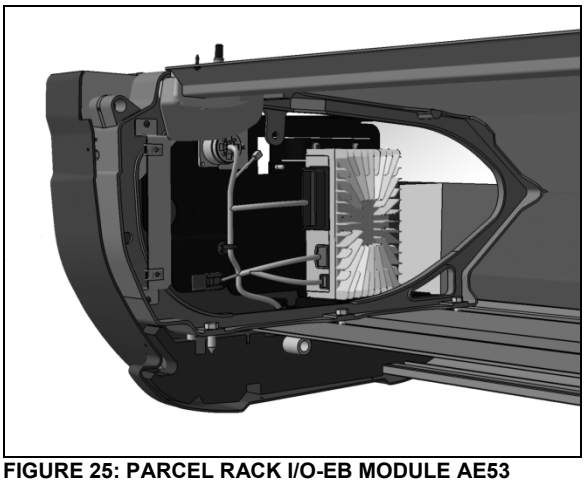

FIGURE 25: PARCEL RACK I/O-EB MODULE AE53

5. BATTERIES

The battery has four (4) major functions:

1. Providing a source of current for starting the engine.
2. Stabilizing the voltage in the electrical system.
3. Supplying current for a limited time, when electrical demands of the equipment exceed the power output of the alternator.
4. Providing a limited source of power for connected accessories, when the engine is not running.

WARNING

Battery posts, terminals and other related accessories contain lead and lead compounds, chemical known to the State of California to cause cancer and other reproductive harm.

Batteries also contain other chemicals known to the State of California to cause cancer.

Wash hands after handling.

5.1 BATTERY INSTALLATION

The battery bank is composed of four AGM batteries. To prevent improper installation of the batteries, the positive (+) and negative (-) signs are laser cut on the battery deck steel sheet. When installing new batteries, place the battery negative and positive poles according to the signs on the battery deck (Figure 26).

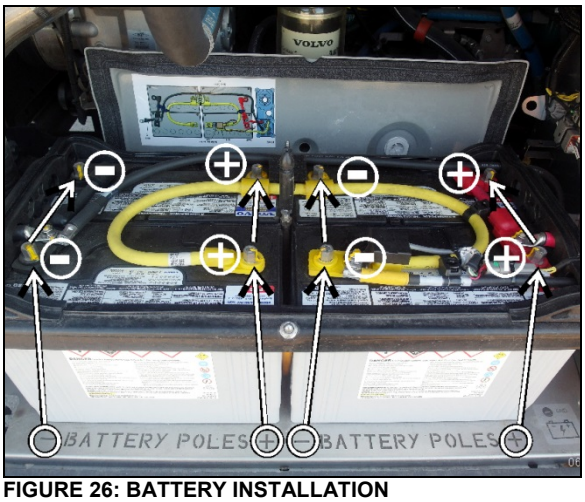

FIGURE 26: BATTERY INSTALLATION

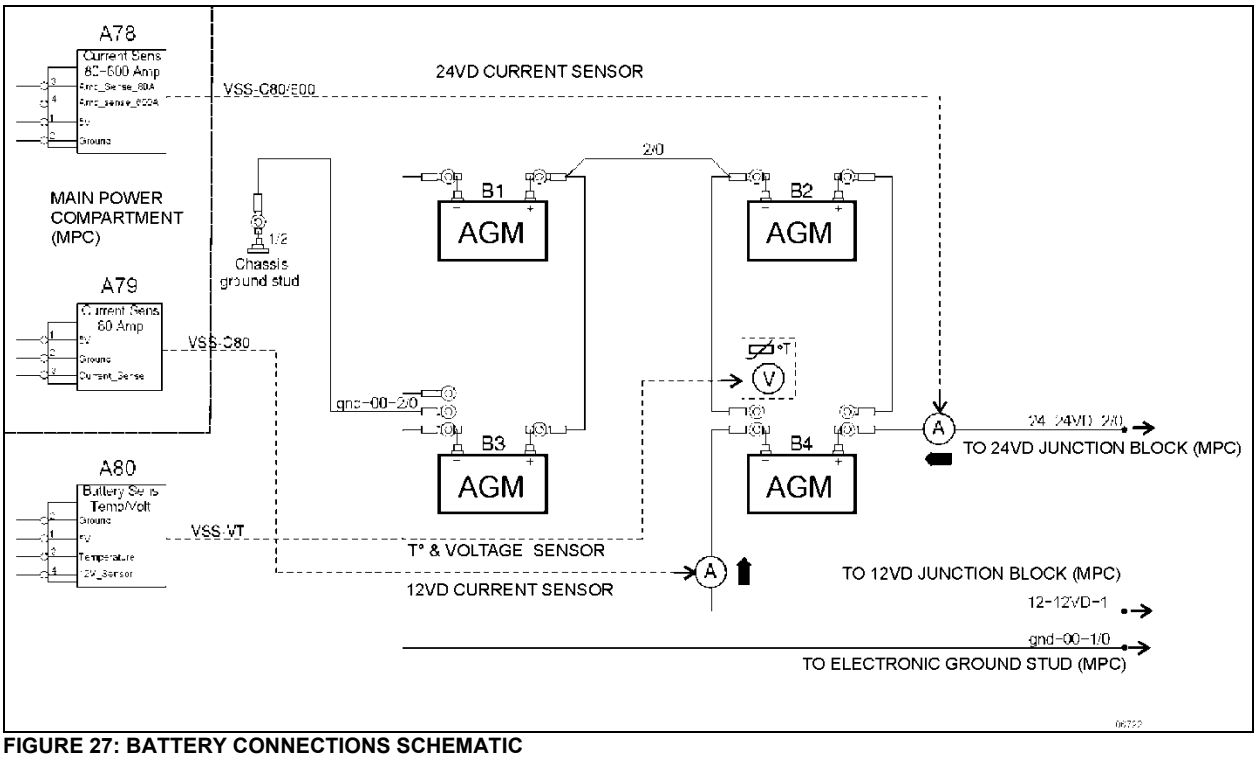

FIGURE 27: BATTERY CONNECTIONS SCHEMATIC

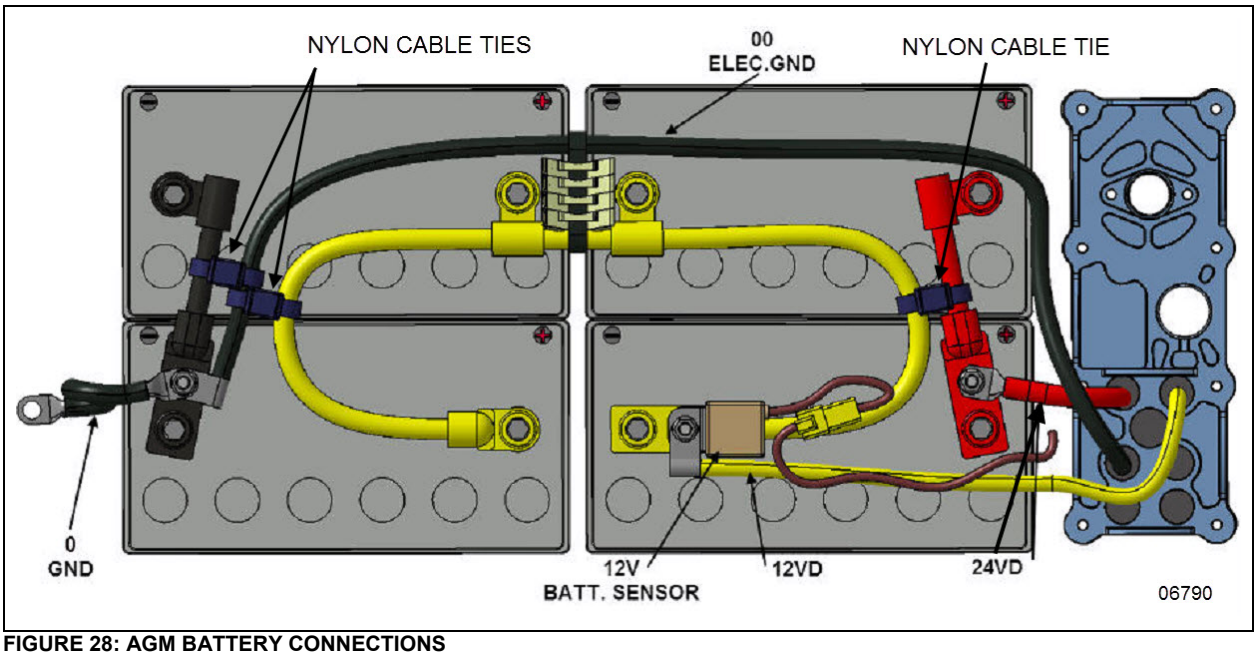

FIGURE 28: AGM BATTERY CONNECTIONS

5.2 AGM BATTERIES

This vehicle is equipped with PRIME energy management system, it is provided with four (4) Absorbed Glass Mat (AGM) 12-volt batteries connected in series-parallel (**FIGURE 28**).

These batteries require no maintenance for their lifetime. They can withstand deeper discharge cycles and several times the charging cycles of a standard battery.

These are sealed, valve regulated recombinant batteries which means that the oxygen created will recombine with the hydrogen in the battery, creating water and preventing water loss. Water never needs to be added to this type of battery.

The top-mounted negative and positive terminals are tightly sealed to prevent leaks.

The electrolyte in this type of battery is absorbed in micro-porous glass separators. This design prevents spills and results in greater resistance to vibration.

Always replace these batteries with identical make and model batteries as the system is balanced and optimized for this type of battery.

CAUTION

Replace only with AGM type batteries of the same specification and capacity.

PRIME system is programmed for the charging capacity of the batteries installed.

Installing a higher capacity battery will affect the battery life as the system will not fully charge the batteries, which is detrimental to battery performance.

Refer to “Specifications” at the end of this section for further details.

AGM batteries should be replaced in pairs or four at a time.

CAUTION

AGM (Absorbed Glass Mat) batteries require a voltage-limited charger, ideally fitted with a battery temperature sensor for temperature correction of charging parameters.

Charge voltage: 13.8-14.6 Volt @77°F (25°C)

Float voltage: 13.4-13.6 Volt @77°F (25°C)

Charging AGM battery on a typical constant current or taper current charger – even one time – may greatly shorten its life.

5.3 BATTERY DISCHARGE PROTECTION

To prevent discharge of the batteries when the engine in not running, some functions are automatically switched off if the batteries voltage drops below 24.4 volts for more than 30 seconds. The "Battery Voltage Warning" pictogram will show on the DID. Set the ignition key to the OFF position and then turn the ignition key to the ON position to reactivate the functions for a period of 30 seconds before they switch off again.

If a prolonged use of the functions with the engine not running is necessary, connect the battery to a charger.

5.4 MAIN ELECTRICAL SHUT-OFF SWITCH

Main 12-volt and 24-volt battery (master) relays are provided for this vehicle. The relays are located in the main power compartment. The 24-volt battery relay R1 & 12-volt battery relay R3 engage when ignition key is in the ON or ACC position and the main electrical shut-off switch (FIGURE 29) is set to the ON position.

When the main electrical shut-off switch is set to the OFF position, the main battery relays R1 & R3 disengage thus all electrical supply from the batteries to main circuit breakers CB1, CB3, CB5, CB8, CB10, CB11, CB13, is cut off, with the exception of the following items, among others.

- Main circuit breakers CB2, CB6, CB9 which are directly connected to the batteries;
- Battery equalizer check module;
- MCM;
- ECM;

- TCM (World transmission);
- Aftertreatment Control Module (ACM);
- Preheater electronic timer;
- Preheater and water recirculating pump;
- Entrance door;
- Radio memory;
- Fire suppression system (momentarily);
- Horn, Hazard:
- Wheelchair lift system;
- Cluster memory.

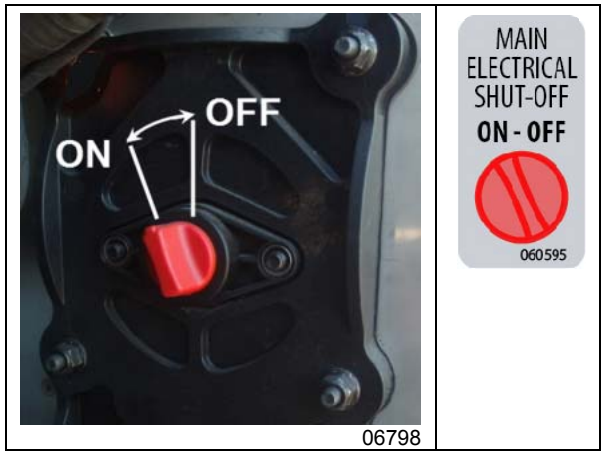

FIGURE 29: MAIN ELECTRICAL SHUT-OFF SWITCH

5.5 BATTERY REMOVAL AND INSTALLATION

The batteries are located in the R.H. side of the engine compartment.

DANGER

To prevent possible electric shocks or sparking, the main electrical shut-off switch should be in the "Off" position before disconnecting cables from the batteries. In addition, trip main circuit breakers CB2 & CB6.

Battery Removal

1. Remove the battery bank cover and place behind the battery bank (FIGURE 30).

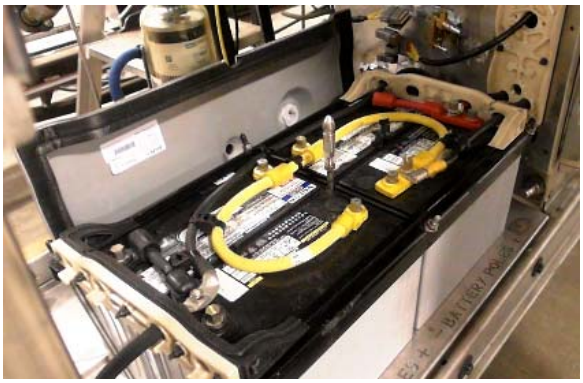

FIGURE 30: BATTERY BANK COVER REMOVED

2. Disconnect the ground cable first (FIGURE 31).

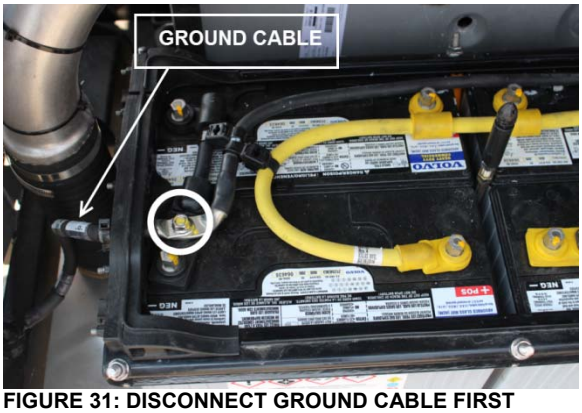

FIGURE 31: DISCONNECT GROUND CABLE FIRST

3. Using a 9/16 hex socket box, disconnect the eight (8) battery cable terminals (FIGURE 32).

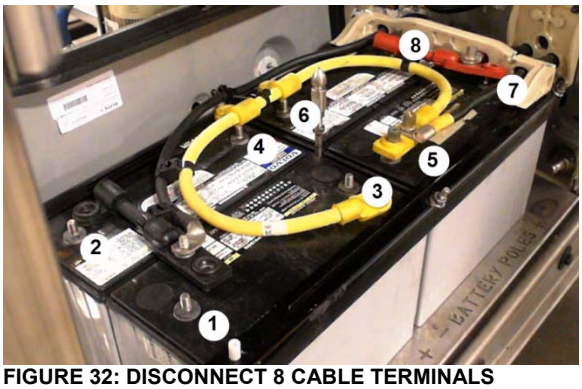

FIGURE 32: DISCONNECT 8 CABLE TERMINALS

4. Put the whole battery cable arrangement aside (FIGURE 33).

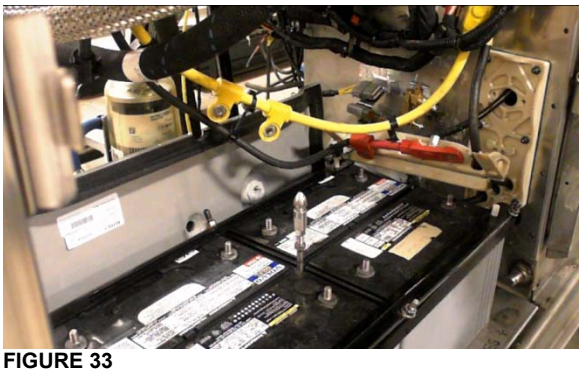

FIGURE 33

5. Unscrew three nuts (indicated with arrows) and then remove the front angle (FIGURE 34).

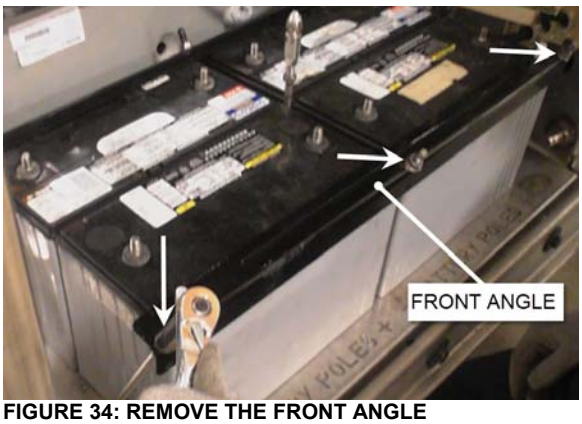

FIGURE 34: REMOVE THE FRONT ANGLE

6. Remove the rear angle similarly.

FIGURE 35: REMOVE THE REAR ANGLE

7. Slide the batteries on a mobile scissor lift table placed slightly lower than the battery deck level.

FIGURE 36

Battery Installation

Reinstalling the batteries is quite similar as the removal procedure but in reverse order.

However, special care should be taken to the following points:

1. To respect battery polarity in the arrangement, positive (+) and negative (-) signs are laser cut on the battery deck steel sheet. When installing the batteries, place the battery negative and positive poles according to the signs on the battery deck (FIGURE 38).

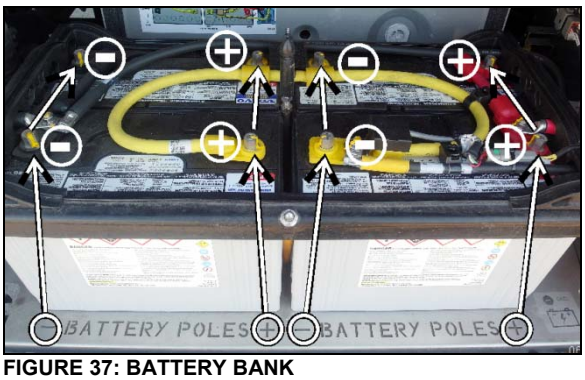

FIGURE 37: BATTERY BANK

2. Rest the aft batteries against the fold on the battery deck. Rest the fore batteries against the aft batteries.

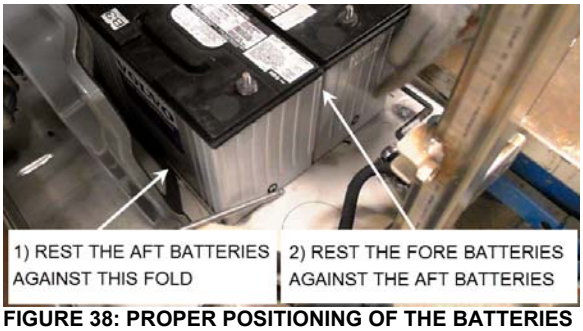

FIGURE 38: PROPER POSITIONING OF THE BATTERIES

3. The upper end of the rods is shaped to match with the angle (FIGURE 39).
4. Tighten the rod nut to the following torque:

TORQUE: 45-55 lb-in (5-6 Nm)

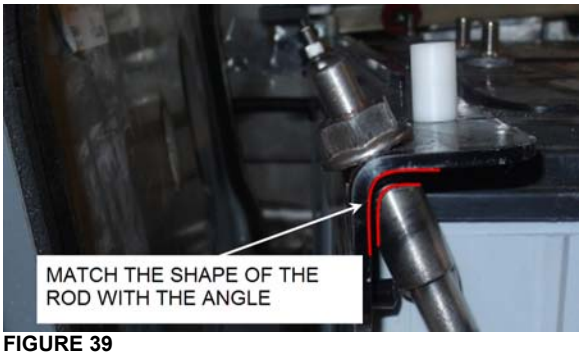

FIGURE 39

5. Align the dowels on the angles with the holes on the cable guides (FIGURE 40).

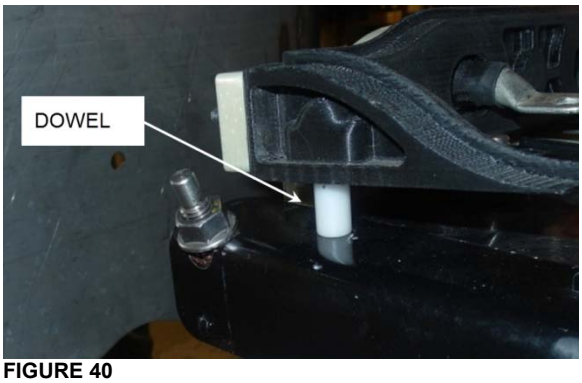

FIGURE 40

NOTE
When partially disconnecting battery cable arrangement, wrap the battery terminals and cable ends with electric tape to prevent accidental grounding. The ground cables should always be disconnected first and connected last.

NOTE
When reinstalling batteries, battery connections must be tightened. A torque wrench is required to ensure an accurate tightening torque.

5. Connect the battery cables. Tighten the cable terminal (item 1, FIGURE 41) nuts to the following torque:

TORQUE: 170 lb-in (19 Nm)

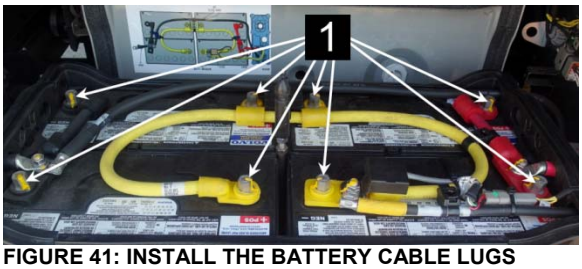

FIGURE 41: INSTALL THE BATTERY CABLE LUGS

6. Connect the ground cable last (FIGURE 42). Tighten the ground cable nut to the following torque:

TORQUE: 170 lb-in (19 Nm)

FIGURE 42: GROUND CABLE

7. To keep the battery connections clean, make sure that battery bank cover leans perfectly on the cable guides and the angles.

DANGER

To prevent possible electric shock or sparking, the main electrical shut-off switch must be set to the “Off” position before tightening an electrical connection.

NOTE
A protective coating should be applied on certain power connections that have been disconnected. Refer to Procedure PR00002E included at the end of this section to know the recommended products and where they are used.

5.6 BATTERY RATING

Each of the 12 volt batteries used on the vehicle has the following rating:

AGM batteries (PRIME):

- Reserve capacity: 200 minutes
- Cold cranking (amps): 800 @ 0°F (-18°C)
- Weight (filled): 69 lb (26,7 kg)

The reserve capacity is defined as the number of minutes a new, fully charged battery at 80°F (26,6°C) can be discharged at 25 amperes and maintain a minimum of 1.75 volts per cell (10.5 volts total for one 12 volts battery). This rating can be used as a basis for determining how long a vehicle might run after an alternator failure.

The cold cranking rating is defined as the minimum discharge current a battery will deliver in amperes for 30 seconds at 0°F (-18°C) while maintaining a minimum of 1.2 volts per cell (7.2 volts total for one 12 volts battery). This rating can be used as a basis for comparing starting performance.

5.7 BATTERY TESTING

Several factors influence battery performance. The methods and inspection procedures proposed here will ensure your batteries are in good shape.

5.7.1 Visual Inspection

1. Check the outside of the battery for a broken or cracked cover or case that could permit loss of electrolyte. If obvious physical damage is noted, replace the battery. If the battery is bulged. Replace the battery. Also check for wet areas around the terminals.
2. Check for loose terminal posts, cable connections, damaged cables, and for evidence of corrosion. Correct conditions as required before proceeding with tests.
3. Check for damaged or loose battery tie-downs.

5.7.2 Removing Surface Charge

Disconnect cables from the battery and attach alligator clamps to the contact lead pad on the battery as shown in Figure 44. Connect a load equal to half the CCA across the terminal for 5 seconds to remove surface charge from the battery.

5.7.3 Load Test

This test is one means of checking the battery to determine its ability to function as required in the vehicle.
To make this test, use test equipment that will withstand a heavy electrical load from the battery, such as a carbon pile resistor along with an ammeter and volt meter (Figure 43). A charging system analyzer test equipment may also be used.

1. Connect a voltmeter, ammeter, and a variable load resistance as illustrated in Figure 43.

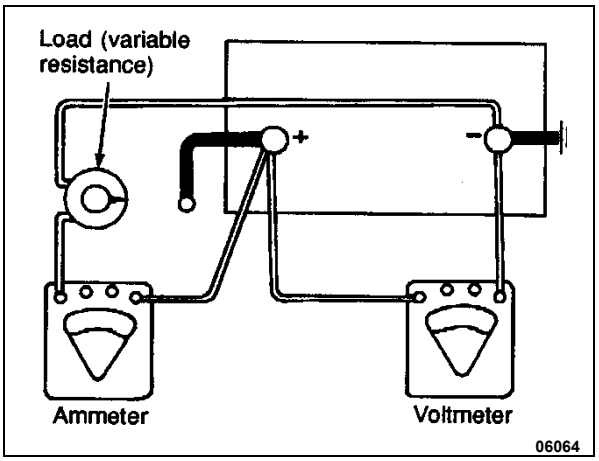

FIGURE 43: LOAD TEST

CAUTION

Observe polarity of the meters and the battery when making connections, and select the correct meter range.

2. Apply a load equal to half the CCA rating @ 0°F for 15 seconds.
3. With an ammeter reading specified load, read voltage. The voltage should be at least 9.6 volts. Disconnect the load. If the voltmeter indicates 9.6 volts or more, the battery is good. If the voltmeter reading is less than 9.6 volts, replace the battery. This voltage is to be used for battery ambient

temperatures of 70ºF (21ºC) and above. For temperatures below 70ºF (21ºC), refer to the following *"Voltage and Temperature Chart"*.

Voltage and Temperature Chart

Ambient Temperature	Minimum Voltage
70ºF (21ºC) and above	9.6
60ºF (16ºC)	9.5
50ºF (10ºC)	9.4
40ºF (4ºC)	9.3
30ºF (-1ºC)	9.1
20ºF (-7ºC)	8.9
10ºF (-12ºC)	8.7
0ºF (-18ºC)	8.5

NOTE

The accuracy of this test procedure is dependent upon close adherence to the proper load, time and temperature specifications.

5.8 BATTERY CHARGING

DANGER

Any procedure other than the following could cause personal injury or damages to the charging system resulting from battery explosion or electrical burns.

Wear adequate eye protection when working on or near the batteries. Ensure that metal tools or jumper cables do not contact the positive battery terminal (or a metal surface in contact with it) as a short circuit will result. Do not attempt to jump start a vehicle suspected of having a frozen battery because the battery may rupture or explode. Both the booster and discharged batteries must be treated carefully when using jumper cables. Follow exactly the procedure outlined later in this section, being careful not to cause sparks.

The batteries used on this vehicle can be charged either on or off the vehicle; however, when they are removed from the vehicle, it is recommended that an adapter kit, which is available from any "A/C DELCO" dealer, be used in charging sealed-terminal batteries. Use the booster block to charge the batteries when they are left on vehicle and **make sure that the main battery disconnect switch is set to the *"On"* position.**

DANGER

During charging of the batteries, an explosive gas mixture forms in each cell. Part of this gas escapes through the vent holes and may form an explosive atmosphere around the battery itself if ventilation is poor. This explosive gas may remain in or around the battery for several hours after it has been charged. Sparks or flames can ignite this gas causing an internal explosion, which may shatter the battery.

1. Do not smoke near a battery which is being charged or which has been recently charged.
2. Do not break live circuits at battery terminals because a spark usually occurs at the point where a live circuit is broken. Care must always be taken when connecting or disconnecting booster leads or cable clamps on chargers. Poor connections are a common cause of electric arcs, which cause explosions.
3. The electrical system on this vehicle is negative ground. Installing the batteries with the positive terminals grounded or incorrect use of the booster battery and jumper cables will result in serious damage to the alternator, batteries and battery cables.

The alligator clamps of the tester or charger must be placed between the terminal nuts and the lead pads of the terminal studs after the vehicle cables are detached. The alligator clamps should make firm contact with the lead pads.

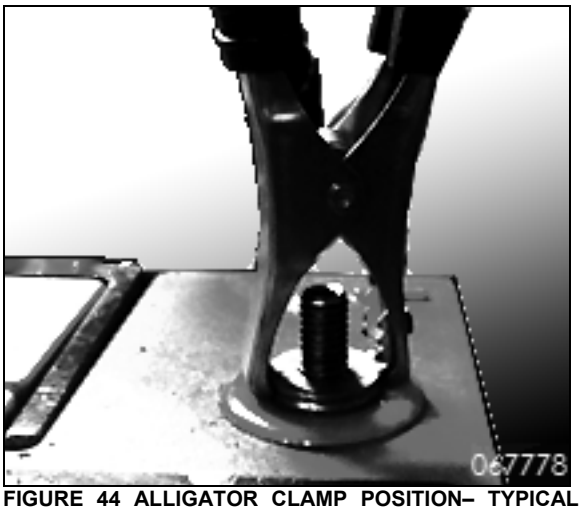

FIGURE 44 ALLIGATOR CLAMP POSITION– TYPICAL AGM BATTERY

A charge rate between 3 and 50 amperes is generally satisfactory for any maintenance-free flooded battery as long as spewing of electrolyte does not occur or the battery does not feel excessively hot (over 125ºF (52ºC)). If spewing or violent gassing of electrolyte occurs or battery temperature exceeds 125ºF (52ºC), the charging rate must be reduced or temporarily stopped to allow cooling and to avoid damaging the battery. Battery temperature can be estimated by touching or feeling the battery case. No further charging is required. Shake or tilt the battery at hourly intervals during charging to mix the electrolyte.

WARNING

Always turn off the charger before connecting or disconnecting to a battery.

NOTE

The charge rate must be doubled when the batteries are charged by the booster block, because of the series-parallel circuit.

5.8.1 Battery Charging Guide

NOTE

AGM (Absorbed Glass Mat) batteries require a voltage-limited charger, ideally fitted with a battery temperature sensor for temperature correction of charging parameters. *Do not manually charge AGM batteries. Look for the following voltage values on your voltage-limited charger.*

Charge voltage: 13.8-14.6 Volt @77°F (25°C)

Float voltage: 13.4-13.6 Volt @77°F (25°C)

Charging AGM battery on a typical constant current or taper current charger – even one time – may greatly shorten its life.

The following guidelines are for maintenance-free flooded batteries.

Fast Charging Rate

3-3/4 hours @ 20 amps
2-1/2 hours @ 30 amps
2 hours @ 40 amps
1-1/2 hours @ 50 amps

Slow Charging Rate

15 hours @ 5 amps
7-1/2 hours @ 10 amps

The time required for a charge will vary according to the following factors:

Size of Battery

A completely discharged large heavy-duty battery requires more than twice the recharging time of a completely discharged small passenger car battery.

Temperature

A longer time will be needed to charge any battery at 0°F (-18°C) than at 80°F (27°C). When a fast charger is connected to a cold battery, the current accepted by the battery will be very low at first, and then in time, the battery will accept a higher rate as it warms.

State of Charge

For example, a completely discharged battery requires more than twice as much charge than a half-charged battery. Since the electrolyte is nearly pure water and a poor conductor in a completely discharged battery, the current accepted is very low at first. Later, as the charging current causes the electrolyte acid content to increase, the charging current will likewise increase.

Charger Capacity

A charger supplying only 5 amperes will require a much longer period of charging than a charger that can supply 30 amperes or more.

5.8.2 Emergency Jump Starting With Auxiliary (Booster) Battery.

DANGER

Off-board battery charger with a start boost facility must not be used to jump start the vehicle. This could damage the electrical system.

Booster Block

On X3-45 coaches, booster block is located near the batteries in the engine compartment on the R.H. side and is accessible through engine R.H. side door (Figure 45).

Both booster and discharged batteries should be treated carefully when using jumper cables. A vehicle with a discharged battery may be started by using energy from a booster battery or the battery from another vehicle.

DANGER

Jump starting may be dangerous and should be attempted only if the following conditions are met:

The booster battery or the battery in the other vehicle must be of the same voltage as the battery in the vehicle being started, and must be negative grounded.

DANGER

Follow the procedure exactly as outlined hereafter. Avoid making sparks.

WARNING

DURING EMERGENCY JUMP STARTING …

Cooling fans WILL start running for a short while.

Keep hands away from cooling fans or keep the radiator door closed.

Wear eye protection and remove rings, watches with metal bands and other metal jewelry.

Apply parking brake and place the transmission shift lever or push-button pads in Neutral (N) position in both vehicles. Turn off lights, heater and other electrical loads.

The following procedure should be used only when the batteries are discharged.

Do not attempt jump starting if you suspect the batteries are charged. Inspect the engine starting system prior to using this procedure.

To jump start, proceed as follows:

1. Remove the red protective cap from the (+) booster block terminal located in the R.H. side engine compartment;

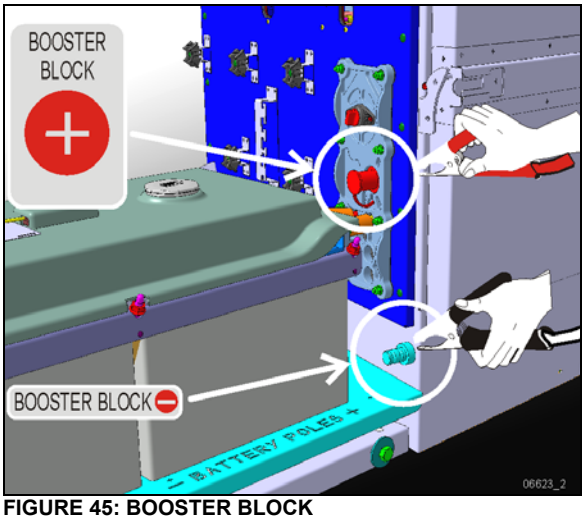

FIGURE 45: BOOSTER BLOCK

2. Connect the red jumper cable to the positive (+) post of the booster power source. If the good battery is in another vehicle, that vehicle's engine must be shut *OFF* before connecting;
3. Connect the other end of the red jumper cable to the positive (+) terminal on the booster block;
4. Connect one end of the black jumper cable to the negative (-) post on the booster power source;
5. Connect the other end of the same black jumper cable to the negative (-) terminal on the booster block; If the good battery is in another vehicle, start that vehicle's engine;
6. Let the engine run for a few minutes, then turn the engine off.
7. Start the vehicle with the run-down battery;
8. Disconnect the jumper cables in reverse order given in steps 2 through 5;
9. Install protective cap on the booster block terminal.

NOTE

Jumper cables must be rated at 500 cranking amperes. If jumper cable length is 20 feet (6 m) or less, use 2/0 (AWG) gauge wires. If cable length is between 20 to 30 feet (6 to 9

m), use 3/0 (AWG) gauge wires.

DANGER

Any procedure other than the above could result in personal injury, property damage due to battery explosion, or damage to the charging system of the booster vehicle or of the boosted vehicle.

5.9 AGM BATTERY CHARGING PRECAUTIONS

AGM (Absorbed Glass Mat) batteries require a voltage-limited, temperature corrected charger.

Make sure your charger is multi-staged and minimally provides the following voltage values:

Charge stage voltage:

13.8-14.6 V @77°F (25°C)

Float stage voltage:

13.4-13.6 V @77°F (25°C)

Charging AGM battery on a typical constant current or taper current charger – even one time – may greatly shorten its life.

5.10 BATTERY EQUALIZATION AND AGM BATTERIES

Equalization is a controlled over charge. Conventional batteries may benefit from this procedure, stirring the chemistry of the entire battery it counters stratification (layers of different concentration of electrolyte), and also counters sulfation that may have accumulated on the battery plates.

AGM battery design prevents chemical unbalance of the electrolyte. Manufacturers of this type of battery generally do not recommend performing equalization.

5.11 CLEANING AND INSPECTION

The external condition of the battery and the battery cables should be checked periodically. The top of the battery should be kept clean and the battery tie-down clamp bolts should be kept properly tightened. For best results when cleaning the battery, wash first with a diluted solution of ammonia or soda to neutralize any acid present then wash out with clean water. The battery tie-down bolts should be kept tight enough to prevent the batteries from moving, but they should not be tightened to the point that excessive strain is placed on the battery hold-down cover. Tighten as prescribed. Refer to torque tables at the beginning of this section.

MAINTENANCE

Battery terminals

Clean and coat terminals with Nyogel at the intervals specified by the Lubrication And Servicing Schedule in Section 24: LUBRICATION & SERVICING.

A protective coating should be applied on certain power connections that have been disconnected. Refer to Procedure PR00002E included at the end of this section to know the recommended products and where they are used.

To insure good contact, the battery cable ring terminals should be tight on the battery posts. If the posts or cable ring terminals are corroded, the cables should be disconnected and the posts and clamps cleaned separately with a soda solution and a wire brush. Install cable ring terminals on battery posts and tighten. Tighten as prescribed. Refer to torque tables at the beginning of this section.

Replace protective caps to prevent corrosion and sparks.

5.12 COMMON CAUSES OF BATTERY FAILURE

When a battery fails, the cause of failure may be related to something other than the battery. For this reason, when a battery failure occurs, do not be satisfied with merely recharging or replacing the battery. Locate and correct the cause of the failure to prevent recurrence. Some common external causes of battery failure are as follows:

1. A defect in charging system such as high resistance or a faulty alternator or regulator. The dashboard ALTERNATOR telltale light

illuminates if one of the alternators is defective.

ALTERNATOR telltale

2. A malfunction within the 12 volts system (equalizer).
3. Overloads caused by a defective starter or excessive use of accessories.
4. Dirt and electrolyte on top of the batteries causing a constant drain.
5. Hardened battery plates, due to battery being in a low state of charge over a long period of time.
6. Shorted cells, loss of active material from plates.
7. Driving conditions or requirements under which the vehicle is driven for short periods of time.
8. A constant drain caused by a shorted circuit such as an exposed wire or water infiltration in junction boxes causing ground fault.
9. Extended operation of preheating system with engine not running.
10. Failing to close disconnect switches during the night.

5.13 TROUBLESHOOTING

If a battery is known to be good and then has not performed satisfactorily in service for no apparent reason, the following factors may reveal the cause of trouble:

1. Vehicle accessories and disconnect switches inadvertently left on overnight.
2. Defects in the charging system, such as high wiring resistance, faulty alternator, regulator or battery equalizer.
3. A vehicle electrical load exceeding the alternator (or battery equalizer) capacity, with the addition of electrical devices, such as CB radio equipment, a cellular phone or additional lighting systems.
4. Defects in the electrical system, such as shorted or pinched wires.
5. Extended driving at a slow speed while using many accessories.
6. Loose or poor battery cable-to-post connections, previous improper charging of a run-down battery, or loose hold-down clamp bolts.
7. High-resistance connections or defects in the cranking system.

5.14 "BATTERY VOLTAGE WARNING" PICTOGRAM

If the "BATTERY VOLTAGE WARNING" (Low Voltage – Connect Battery Charger) pictogram shows up in the DID (Driver Information Display), check the voltmeter gauge to determine if the battery voltage is too high or too low.

5.14.1 Voltage Gauge Definitions

Voltmeter drops below 24.4 volts dc

- Check alternator output.
- Check voltage regulator.
- Check battery connections.
- Check battery equalizer connections.

Voltmeter exceeds 30 volts dc

- Check alternator output (voltage regulator might be defective).
- Check battery connections.

Checking Battery Balance

NOTE
Allow at least 15 minutes to balance batteries after any corrective measure has been taken.

1. Batteries out of balance (difference greater than 1.5 volts between the two battery banks).
   - Check battery equalizer connections.
   - Check equalizer cables for proper gauge.
   - Check battery connections.
2. Demand for 12-volt power exceeding rated amperage output of battery equalizers causing batteries to go out of balance.
   - Reduce 12-volt load or install additional battery equalizer(s).

5.14.2 BATTERY warning Pictogram MAY appear as a reminder

If you leave *ignition ON, park brake set* and *engine not running*, this warning may appear after 20 minutes as a reminder to connect the battery charger. The reminder will appear even if the batteries are in the right voltage range.
Confirm battery voltage is indeed correct with the DID Gauges screen and if you do need to leave the ignition ON for a prolonged period, connect a battery charger.

6. BATTERY EQUALIZER

For vehicles with PRIME energy management system, a Vanner “Vann-Bus 80 Series” 100amp Battery equalizer with Smart Monitor is installed beside the batteries in the battery compartment. Refer to Vanner Vann-Guard 80 Series Owner's Manual found on your Technical Publications USB flash drive.

7. PRIME ENERGY MANAGEMENT SYSTEM

The acronym “PRIME” stands for Power Recovery by Intelligent Management of Energy.

This system focuses on eliminating parasitic loads on the engine by intelligent management of the alternators and air compressor duty cycle.

Instead of constantly charging, the alternators will use engine negative torque (braking, deceleration) to generate “Free” electricity.

Depending on the compressed air requirement, PRIME will also trigger the production of compressed air on negative torque.

PRIME also introduces maintenance-free Absorbed Glass Mat (AGM) batteries and a new Vanner 80 series battery equalizer that monitors battery State of Charge (SOC).

Battery temperature, voltage and current are also monitored to prevent overcharging and overheating.

Maximum fuel economy is obtained on a ride when the mix of hilly and flat portions allows the batteries to be charged when the vehicle is in free wheel. It basically means that batteries are charged with free energy and that no fuel consumption is dedicated to charge the batteries.

7.1 COMPONENTS

New components includes AGM batteries, a Vanner Battery equalizer, a temperature sensor located on the battery post and two voltage and current sensors monitoring 12V and 24 V circuits. Refer to Figure 46 below.

The compressor duty cycle control is achieved by an electric air dryer. This is covered in section 12 of this manual.

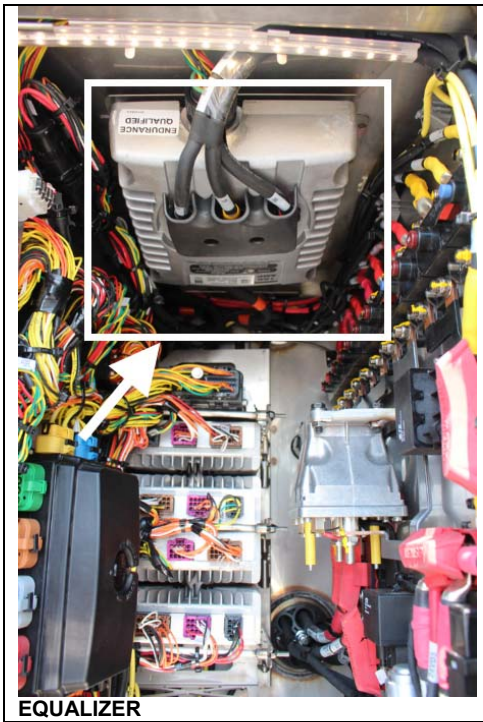

EQUALIZER

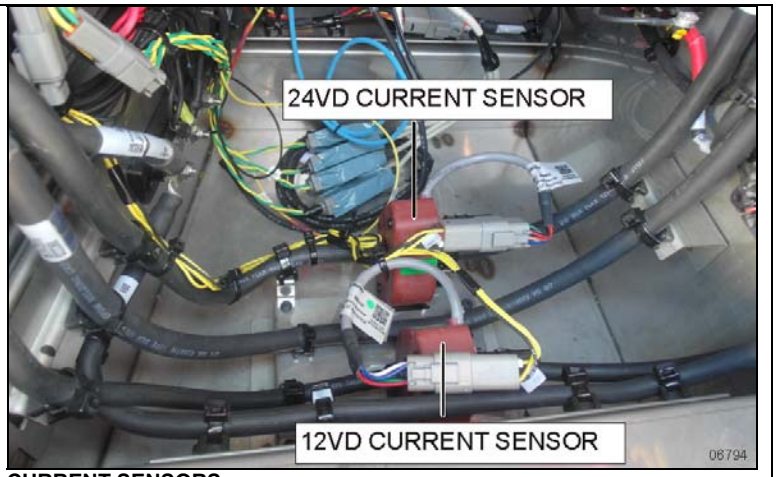

CURRENT SENSORS

FIGURE 46: PRIME ELECTRICAL COMPONENT

7.1.1 Vanner 80 Series Battery Equalizer Fault Codes

The 80 Equalizer Can Bus Interface supports SAE J1939 Diagnostic Message 1 (DM1) for active Diagnostic Trouble Codes. See list below. Refer to OEM publication *Vanner Vann-Guard 80 Series Owner's Manual* PDF for additional details.

Description	SPN	FMI
Over Voltage Fault (OVF)	168	0: Data valid, but above normal operating range – Most Severe
Under Voltage Fault (UVF)	168	1: Data valid, but below normal operating range – Most Severe
Imbalance (IMB)	520448	0: Data valid, but above normal operating range – Most Severe
Equalizer Fault (EQFLT)	520449	1: Data valid, but below normal operating range – Most Severe
Temperature Sensor Fault (TSF)	520450	0: Data valid, but above normal operating range
Temperature Sensor Fault (TSF)	520450	1: Data valid, but below normal operating range
Temperature Sensor Fault (TSF)	520450	2: Data erratic, intermittent, or incorrect – Most Severe
12V Current Sensor Fault (SCSF)	520451	0: Data valid, but above normal operating range – Most Severe
12V Current Sensor Fault (SCSF)	520451	1: Data valid, but below normal operating range
12V Current Sensor Fault (SCSF)	520451	2: Data erratic, intermittent, or incorrect – Most Severe
24V Current Sensor Fault (DCSF)	520452	0: Data valid, but above normal operating range – Most Severe
24V Current Sensor Fault (DCSF)	520452	1: Data valid, but below normal operating range
24V Current Sensor Fault (DCSF)	520452	2: Data erratic, intermittent, or incorrect – Most Severe

7.2 DID DISPLAY

In the DID you will find the percentage of trip made with regenerated electricity displayed along with the instantaneous fuel consumption.

This value is reset each time the engine is restarted.

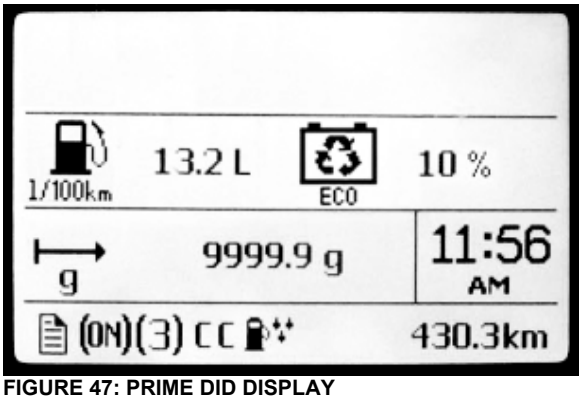

FIGURE 47: PRIME DID DISPLAY

In addition to the standard voltage gage, the DID also includes a state of charge gage for the batteries:

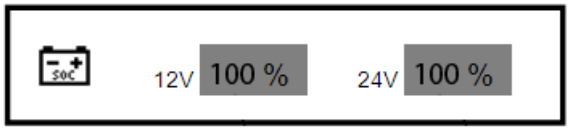

FIGURE 48: BATTERY STATE OF CHARGE

This gage displays the level of charge for the 12V and 24V battery banks in percentage.

8. BOSCH ALTERNATORS

Three 24-volt 150A, self-regulated, belt driven, air-cooled HD 10 BOSCH alternators are used in the 24 volt electrical system.

NOTE
For the complete removal/installation instructions, refer to Maintenance Information ***MI16-17 Bosch HD10 alternator removal and installation*** *included at the end of this section.*

8.1 IDENTIFYING A DEFECTIVE ALTERNATOR

When an alternator is not charging, the *charging system warning light* will illuminate.

charging system warning light

8.1.1 Alternator identification

Cold side alternators are the one found on the A/C compressor side. The hot side alternators are the one located on the engine turbo side.

<u>Cold Side (R.H.):</u>

ALTERNATOR Up RH= upper right
ALTERNATOR Low RH=lower right

ALTERNATOR Ext RH= above small A/C comp. (MTH only)

<u>Hot Side (L.H.):</u>

ALTERNATOR Up LH= upper left (MTH only)
ALTERNATOR Low LH=lower left

8.1.2 Identifying a defective alternator using the instrument cluster DID

1. On the DID (Driver Information Display), select DIAGNOSTICS menu.
2. Select VIEW ACTIVE FAULTS and then ELECTRICAL SYSTEM.
3. The active electrical system faults will appear. Scroll through the active faults. You will find one of the following messages:

MID (188)	ELECTRICAL SYSTEM
PSID 34	ALTERNATOR Low RH
FMI (5)	OPEN CIRCUIT

MID (188)	ELECTRICAL SYSTEM
PSID 35	ALTERNATOR Up RH
FMI (5)	OPEN CIRCUIT

8.1.3 Identifying a Defective Alternator – Back-probing AE49 & AE52 Multiplex Modules Method

Prerequisite conditions:

a) Engine running;

b) Parking brake applied.

Alternator Up RH =pin J1:20, module AE49
Alternator Low RH=pin J2:8, module AE52
Alternator Low LH= pin J2:9, module AE52

Back-probe pin 20 (AE49 J1:20):

- If multimeter reads 1-2 volts, the **upper R.H.** alternator is defective;
- If multimeter reads 12 volts, you have an open circuit;
- If multimeter reads 26 volts or greater, the **upper R.H.** alternator operates normally.

Back-probe pin 8 (AE52 J2:8) and a good ground (use ground stud in the compartment):

- If multimeter reads 1-2 volts, the **lower R.H.** alternator is defective;
- If multimeter reads 12 volts, you have an open circuit;
- If multimeter reads 26 volts or greater, the **lower R.H.** alternator operates normally.

Back-probe pin 9 (AE52 J2:9) and a good ground (use ground stud in the compartment):

- If multimeter reads 1-2 volts, the **lower L.H.** alternator is defective;
- If multimeter reads 12 volts, you have an open circuit;
- If multimeter reads 26 volts or greater, the **lower L.H.** alternator operates normally.

8.2 ALTERNATOR DRIVE BELT

MAINTENANCE

Drive belt

Inspect for crack or frayed material at the intervals specified by the Lubrication And Servicing Schedule in Section 24: LUBRICATION & SERVICING.

8.2.1 Removal and installation

1. Insert a ½″ socket drive into the automatic belt tensioner opening.
2. Twist the tensioning arm to slacken belt.
3. Remove belt.

Installation of the alternator drive belt is the reverse of removal.

FIGURE 49: ½″ SOCKET DRIVE WRENCH

NOTE

Belts specifications may vary. For proper belt selection, always consult your vehicle Coach Final Record.

8.2.2 Adjustment

Correct belt tension is required to maximize belt life. The tensioning arm maintains proper belt tension, no adjustment is required.

9. STARTER

Refer to Mitsubishi Electric Corporation (MELCO) Service bulletin ME003-P annexed at the end of this section for information and maintenance instruction on MELCO 105P70 starter.

NOTE

For the complete removal/installation instructions, refer to Maintenance Information ***MI16-16 Starter removal and installation*** *included at the end of this section.*

CAUTION

Do not engage starter for more than 15 seconds at a time. If engine does not start within 15 seconds, release ignition key and let starter cool for one minute before attempting to restart.

10. ENGINE BLOCK HEATER

The vehicle may be equipped with an engine immersion-type electric block heater to assist cold weather starting. The heater male electric plug is easily accessible through the engine compartment R.H. side door (FIGURE 50). To use it, connect the female plug of an electrical extension cord to the heater plug. The extension cord must be plugged into a 120 V AC power source only. The engine block heater should be used whenever the vehicle is parked for an extended period of time in cold weather and a suitable power source is available.

10.1 MAINTENANCE

This heater is non-serviceable except for the cord, and if faulty, must be replaced as a unit.

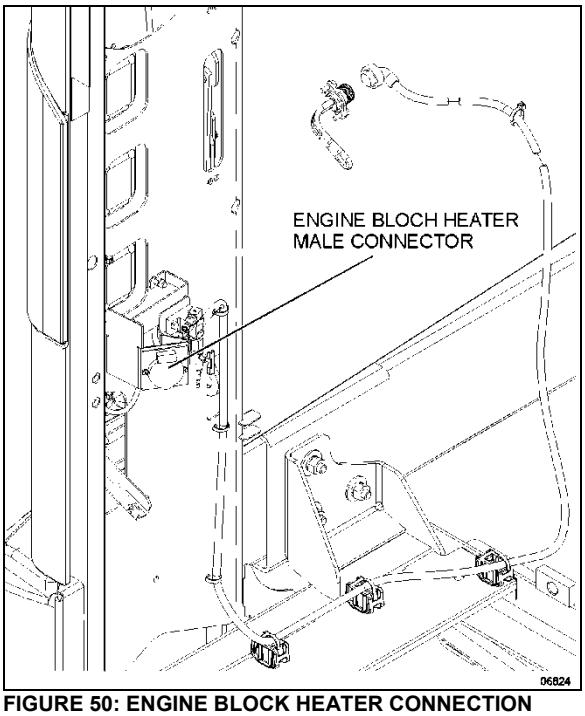

FIGURE 50: ENGINE BLOCK HEATER CONNECTION

11. X3 SERIES EXTERIOR LIGHTING

The circuit for exterior lights, as well as their control switches, relays and circuit breakers are shown on the applicable wiring diagrams. Wiring diagrams are found in the Technical Publication box.

11.1 HEADLIGHTS

Each headlight assembly consists of two headlamp module 90 mm (3½ inch) equipped with a 12-volt halogen bulb and one 100 mm (4 inch) 12-volt LED turn/signal lamp. Outer lamps have a double function (both low and high beam). Inner lamps are used for high beam or daytime running light. The inner or outer lamp uses the same single filament halogen bulb part number.

NOTE

If vehicle is equipped with optional Xenon headlamps, refer to paragraph 9.1.6.

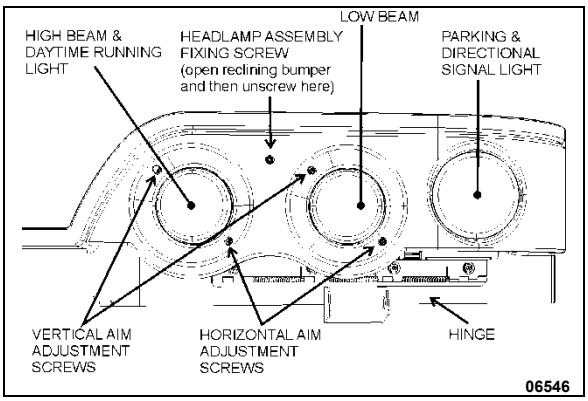

FIGURE 51: HEADLIGHT ASSEMBLY

11.1.1 Headlight Beam Toggle Switch

The multifunction lever located on the steering column is used to select proper lighting. High beams or low beams can be selected by pulling the lever rearward. A high beam indicator on the central dashboard panel is illuminated when the high beam circuit is energized.

NOTE

Pulling the lever rearward while the lights are off will flash the headlights.

11.1.2 Maintenance

Clean headlights with soap and water. When a headlight burns out, a new bulb must be installed. Headlights must be properly aimed to provide maximum allowable road illumination. When using mechanical aiming devices, follow manufacturer's instructions.

Aiming can be performed without opening headlight assembly. Horizontal and vertical aiming of each module is provided by two adjusting screws that pivot the module in the housing for proper alignment (Figure 52). There is no adjustment for focus since the module is set for proper focus during manufacturing assembly.

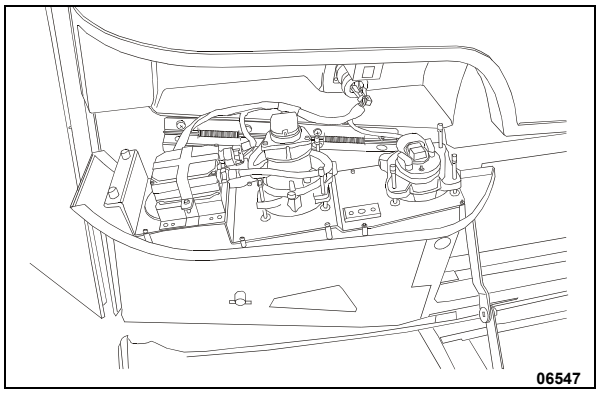

FIGURE 52: OPENING HEADLIGHT ASSEMBLY

NOTE

Make sure headlight assembly is properly positioned into its housing before securing using fixing screw.

CAUTION

Use a soft cloth to clean the parking and front turn signal lamp.

11.1.3 Headlight Adjustment

1. Headlight aiming and inspection can be accomplished by visual means. This is done on a screen located at a distance of 25 feet (7,6 m) of the headlights. It should be of adequate size with a matte-white surface well shaded from extraneous light and properly adjusted to the floor area on which the vehicle stands. Provisions should be made for moving the screen or its vertical centerline so that it can be aligned with the vehicle axis. In addition to the vertical centerline, the screen should be provided with four laterally adjustable vertical tapes and two vertically adjustable horizontal tapes.
2. The four movable vertical tapes should be located on the screen at the left and right limits called for in the specification with reference to centerlines ahead of each headlight assembly.

The headlight centerlines shall be spaced either side of the fixed centerline on the screen by ½ the lateral distance between the light source centers of the pertinent headlights. The horizontal tapes should be located on the screen at the upper and lower limits called for in the specification with reference to the height of beam centers and the plane on which the vehicle rests, not the floor on which the screen rests.

TABLE 1 – VERTICAL BEAM AIM GUIDELINES

Headlight (centerline) Mounting Height	Nominal Vertical Aim	Aim Inspection Limits for Vertical Aim
56 to 90 cm (22 to 36 inch)	0 Vertical	10 cm (4 inch) up to 10 cm (4 inch) down
90 to 120 cm (36 to 48 inch)	5 cm (2 inch) down	5 cm (2 inch) up to 15 cm (6 inch) down
120 to 140 cm (48 to 54 inch)	6.4 cm (4 inch) down	4 cm (1.5 inch) up to 16.5 cm (6.5 inch) down

3. The nominal vertical aim position on lower beam headlights shall be adjusted based on the headlight mounting height, from the ground to the light source center of the headlight, according to table1.
4. High beam headlights are aimed so that the center of the high-intensity zone is located at the horizontal and straight ahead vertically (Figure 54).
5. Low beam headlights are aimed so that the top edge (the cutoff) of the high-intensity zone is at the vertical location as per Table 1 and the left edge of the high-intensity zone is at the vertical centerline of the headlight (Figure 55).
6. The inspection limits for high-beam headlights shall be with the center of the high-intensity zone from 10 cm (4 in) up to 10 cm (4 in) down; and, from 10 cm (4 in) left to 10 cm (4 in) right on a screen at 7.6 m (25 ft) (Figure 56).

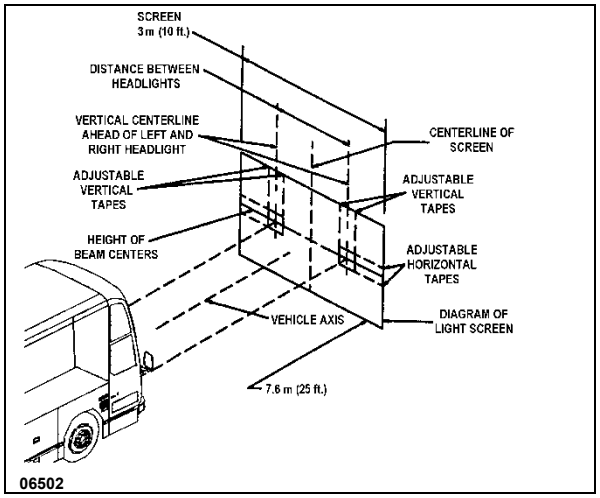

FIGURE 53: ALIGNMENT OF HEADLIGHT AIMING SCREEN

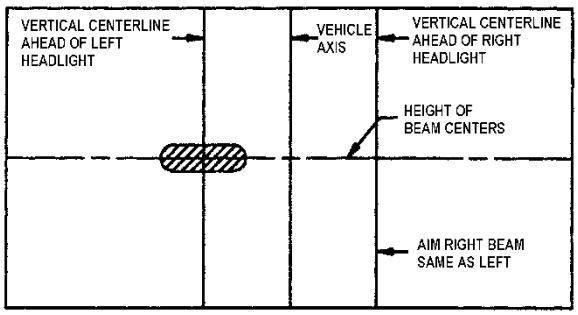

FIGURE 54: UPPER BEAM HIGH-INTENSITY ZONE PROPER LOCATION ON SCREEN 06503

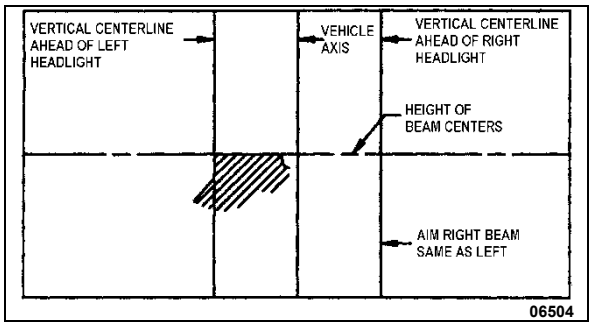

FIGURE 55: LOWER BEAM HIGH-INTENSITY ZONE PROPER LOCATION ON SCREEN

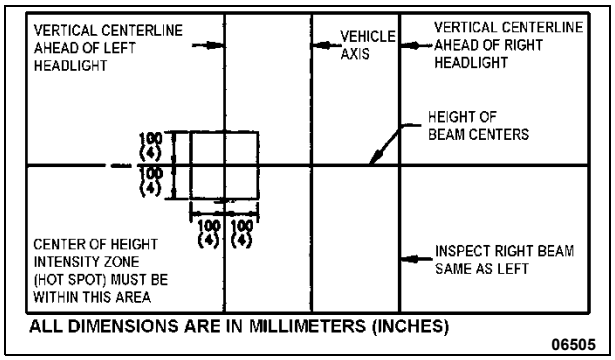

FIGURE 56: AIM INSPECTION LIMITS FOR UPPER-BEAM HEADLIGHTS

7. The inspection limits in the vertical direction for low-beam headlights or the low beam of a dual-beam headlight, shall be as described in Table 1. In the horizontal direction, the left edge of the high-intensity zone shall be located from 10 cm (4 in) left to 10 cm (4 in) right of the vertical centerline of the beam. The viewing screen shall be located 7.6 m (25 ft) in front of the vehicle (Figure 57).

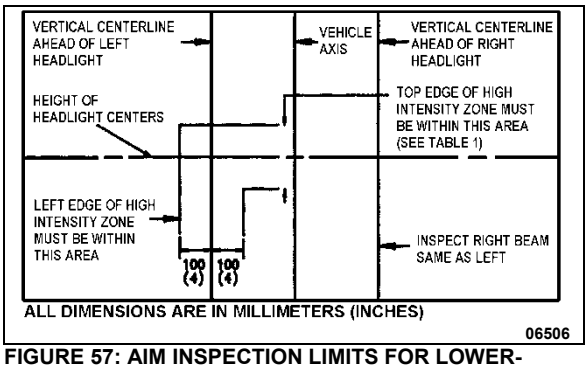

FIGURE 57: AIM INSPECTION LIMITS FOR LOWER-BEAM HEADLIGHTS

11.1.4 Sealed-Beam Unit

Bulb Removal and Replacement

1. Pull the release handle located inside the front service compartment to tilt down the entire bumper assembly.
2. Remove the headlight screw fixing the headlight assembly, then tilt headlight assembly down (Figure 52).
3. Remove connector from headlight bulb.
4. Remove the bulb by pushing and rotating it out of the socket.
5. Install the new bulb by reversing the previous procedure.

CAUTION

During this step, avoid contacting the bulb with the fingers not to alter the bulb life.

NOTE

Do not disrupt headlight adjustment screws.

Module Replacement

1. Pull the release handle located inside the front service compartment to tilt down the entire bumper assembly.
2. Remove the headlight screw fixing the headlight assembly, then tilt headlight assembly down (Figure 52).
3. Remove connector from headlight bulb.
4. Unfasten three metal clips attaching headlight unit to support.
5. Install new module and fasten metal clips.
6. Install wiring connector on back of new sealed beam unit.
7. Tilt headlight assembly up into its housing then secure using fixing screw.

NOTE
Make sure headlight assembly is properly positioned into its housing before securing using fixing screw.

8. Perform alignment procedure.

NOTE
The headlight aim must be checked and adjusted even if it was properly adjusted before the sealed beam unit was replaced.

11.1.5 Front Turn Signal

The front turn signal is part of the front headlight assembly. The turn signal is a sealed unit (LED) located on each front corner and should be replaced as an assembly. Turn signal is visible from both front and side.

Removal and Replacement

1. Pull the release handle located inside the front service compartment to tilt down the entire bumper assembly.
2. Remove the headlight screw fixing the headlight assembly, then tilt headlight assembly down (Figure 52).
3. Partially unfasten back plate fixing screws, then remove signal lamp.
4. Remove socket from signal lamp.
5. Install wiring connector on back of new signal lamp then install signal lamp.
6. Fasten back plate fixing screws then tilt headlight assembly up into its housing then secure using fixing screw.

NOTE
Make sure headlight assembly is properly positioned into its housing before securing using fixing screw.

11.1.6 Optional Xenon Headlamp

The outer lamps of each headlight assembly may be equipped with the optional Xenon lamps. These lamps improve visibility and provide better lifespan.

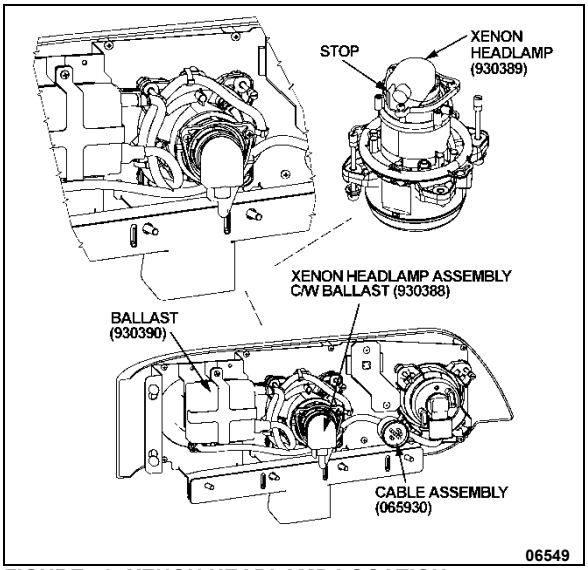

FIGURE 58: XENON HEADLAMP LOCATION

Bulb Removal and Replacement

1. Pull the release handle located inside the front service compartment to tilt down the entire bumper assembly.
2. Remove the headlight screw fixing the headlight assembly, then tilt headlight assembly down (Figure 52).
3. Remove main cable connector (066011).
4. Remove connector from headlamp bulb by turning counterclockwise.
5. Unscrew the three Phillips head screws, pull the retainer and bulb out.

⚠ **CAUTION**
To avoid breaking the bulb, make sure the

socket is in proper position against the stop.

6. Install the new bulb by reversing the previous procedure.

CAUTION

During this step, avoid contacting the bulb with the fingers not to alter the bulb life.

NOTE

Do not disrupt headlight adjustment screws.

CAUTION

Never connect a voltmeter or V.O.M. to measure bulb voltage as instrument will be destroyed.

Troubleshooting and Safety

When switching on the Xenon headlamp using the rocker switch, a lamp short-circuit test is performed.

Current is detected in the lamp circuit before the ignition time and ignition prevented. Connection of the "hot" lamp to the body mass also prevents ignition. In both cases, the system is cut off within < 0.2 s and can only be restarted via the rocker switch.

In general, the maximum ignition time is < 0.2 s, which period is followed by cutoff. This would happen if a lamp was defected.

Lamp missing: system is cut off after < 0.2 s.

If lamp components or cables are damaged by force (accident) so that contact with hazardous parts is possible, the current in these lines is earthed by the vehicle body and - as with a defective household appliance - switched off when 30 mA are reached within < 0.2 s. the cutoff time is shortened by a more powerful defect current.

To protect the ballast, a counter in the electronic safety system ensures that a defective lamp can only be switched off 7 times consecutively after a successful ignition, after which the device is cut off. This prevents flutter and flashing. This counter is put out of action when the lamp cutoff time repetition interval is longer than 1.3 s so that temporary non-defect disturbances that result in immediate invisible re-ignition do not cause lamp cutoff.

A warning notice on the lamp plug makes you aware of the fact that the lamp is operated in this system on a higher voltage (you should therefore switch off the lamp before working on this part).

After taking out the lamp, the contact pins are in a practically idle state (< 34 Volt) after < 0.5 seconds so that there is no immediate danger of electric shock even if the warning is disregarded.

With this safety concept there is no danger to check the ballast with a new bulb. There is a very high probability that the ballast is OK if the ballast can ignite the bulb.

One simple test to check the ballast would be to measure the Nominal current of 1.58 A after one minute for the 24V ballast.

11.2 STOP, TAIL, DIRECTIONAL, BACK-UP, AND HAZARD WARNING LIGHTS

A combination stoplight, taillight, directional signal light and back-up light assembly is mounted at the rear, on each side of the vehicle. Furthermore, when braking, two center stoplights (LED) and a center high-mounted stop light (CHSL) (LED) will illuminate simultaneously with the stoplights on the sides for increased safety. The L.H. and R.H. side center stop lights are also used as directional signal and marker lights.

The stop, tail, directional signal and back-up lights consist of individual lamps, each equipped with 6 LED lights, mounted on the engine rear door.

LED lights are not replaceable and each lamp is serviced individually as a complete unit.

The hazard warning flashing system uses the front, side and rear directional lights simultaneously. This system is energized by a switch on the L.H. dashboard.

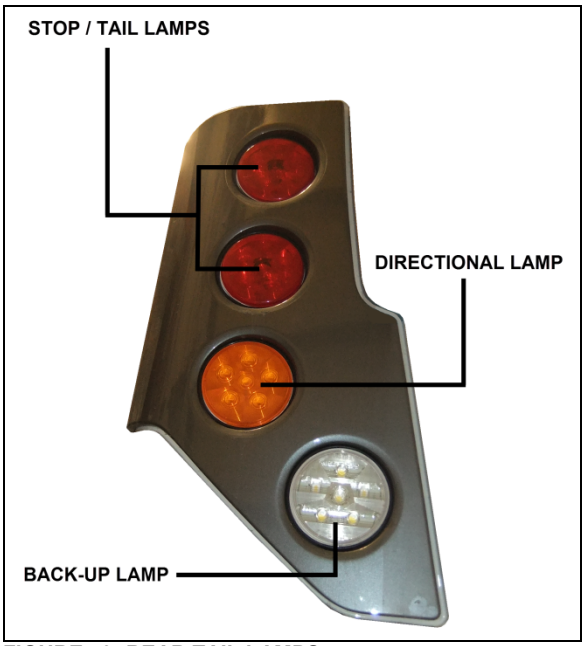

FIGURE 59: REAR TAIL LAMPS

11.2.1 Lamp Removal and Replacement

1. Open engine compartment rear door.
2. Remove the lamp pod from the engine compartment door by unscrewing the Torx hold down screws (4) at the back of the door and the two (2) side retaining nuts.
3. Remove the lamp support retaining screws (2), and then from the outside, disconnect and remove the faulty lamp and its support.
4. From the outside, install the new lamp with its support then fasten the retaining screws.
5. Reinstall the lamp pod on the door and reconnect the lamp.

11.2.2 Center Stoplights and Cyclops Light Removal and Replacement

These (LED) lights are sealed unit and should be replaced as an assembly in accordance with the following procedure:

1. Unscrew both “Phillips” light screws then remove the light assembly.
2. Install new light assembly and secure using screws.

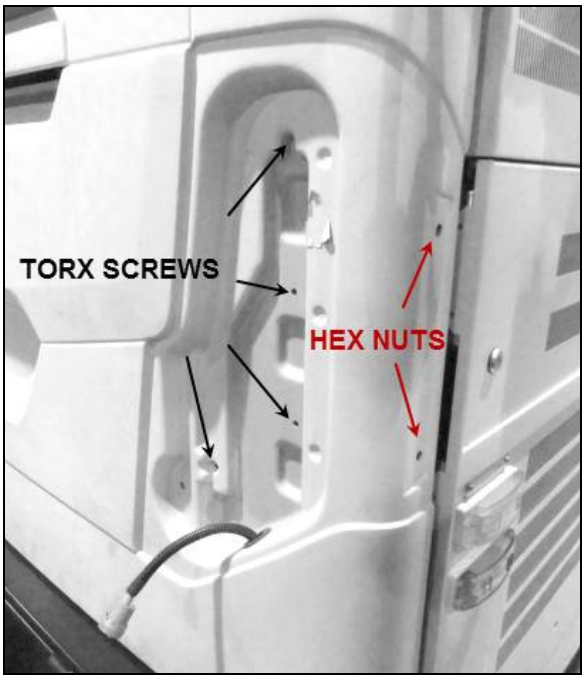

FIGURE 60: TAILLAMP POD RETAINING SCREWS & NUTS

11.3 LICENSE PLATE LIGHT

Two LED units are mounted above the rear license plate(s) of vehicle. In case of burn out, the LED unit must be changed according to the following procedure.

1. Pry out the rubber seal with a small screwdriver. Pull on the LED unit and disconnect it.
2. Reconnect new LED unit, place rubber seal, and press on it until it is seated in position.

11.4 CLEARANCE, IDENTIFICATION AND MARKER LIGHTS

The vehicle is equipped with marker, identification and clearance lights (LED). The clearance lights are mounted at each corner of the coach near the top and the identification lights are in the upper center of rear and front sections.

The rear clearance and identification lights are red and the front ones are amber.

The amber marker lights are mounted along the sides of vehicle.

The side marker light is a sealed unit (LED) and should be replaced as an assembly in accordance with the following procedure:

1. Unscrew both *"Phillips"* light screws, and then remove the light assembly.
2. Position the new light assembly and install the "Phillips" screws.

11.4.1 Clearance and Identification Light Removal and Replacement

The clearance and identification light are sealed units (LED) and can be replaced in accordance with the following procedure:

1. Unscrew both "Phillips" light screws, and then remove the light assembly.
2. Position the new light assembly, and then install the "Phillips" screws.

11.5 FOG LIGHTS

Optional halogen fog lights can be mounted on this vehicle to give the driver better visibility in foggy weather, or to improve the range of vision just ahead of the coach.

11.5.1 Bulb Removal and Replacement

1. Pull on the release handle located in the front service compartment, near the door lower hinge. The bumper will lower gradually.
2. Unscrew the wing nut and pivot assembly upwards.
3. Unscrew the outer ring. Disconnect the light unit connection and remove the bulb.
4. Install the new bulb, reconnect the light unit and replace in its proper position.

CAUTION

During this step, avoid contacting the bulb with your fingers. This could alter the bulb life.

5. Reinstall the outer ring, pivot the assembly downwards.

Fasten the wing nut and securely close the bumper.

12. X3 SERIES INTERIOR LIGHTING EQUIPMENT

12.1 CONTROL PANEL LIGHTING

The instrument gauges and switches mounted on all control panels are energized whenever the exterior light switch is pushed to the first position. A control dimmer located on the dashboard is used to vary the brightness of the panel gauges, switches and indicator lights.
The gauge lights, panel lights, switch lights and indicator lights have a different bulb arrangement. Thus, the procedure to change a defective bulb can vary according to the application.

12.1.1 Switch Lighting

1. Slightly pull the switch with a defective LED away from the control panel.
2. Disconnect the electric cable from the switch.
3. To install a new switch, reverse the procedure (Figure 61)

NOTE

Switches are lighted by the use of LED. When lighting on a switch fails, replace defective switch as a unit.

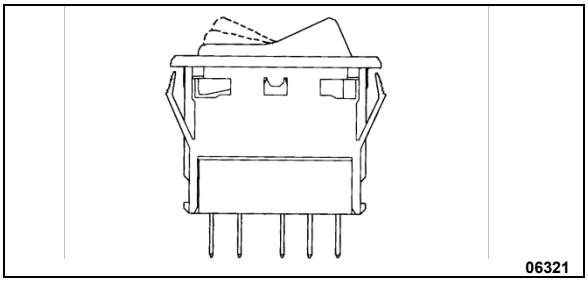

FIGURE 61: SWITCH

12.1.2 Telltale Light Replacement

Telltale module is non-serviceable and must be replaced as a unit.

1. Unscrew and remove the top dashboard panel.
2. Remove the telltale back wire electric connectors.
3. Unscrew and remove the telltale module.

4. To replace the telltale module, reverse the procedure.

12.1.3 Gauge Light Bulb Replacement

1. For any gauge light bulb replacement, the dashboard panel must be removed in order to have access to the rear of gauges.
2. Remove bulb socket from the gauge, turn the defective bulb counterclockwise and pull it out of the gauge.
3. Push a new bulb and socket ASM and turn clockwise to lock in place.
4. Replace the rear dashboard housing.

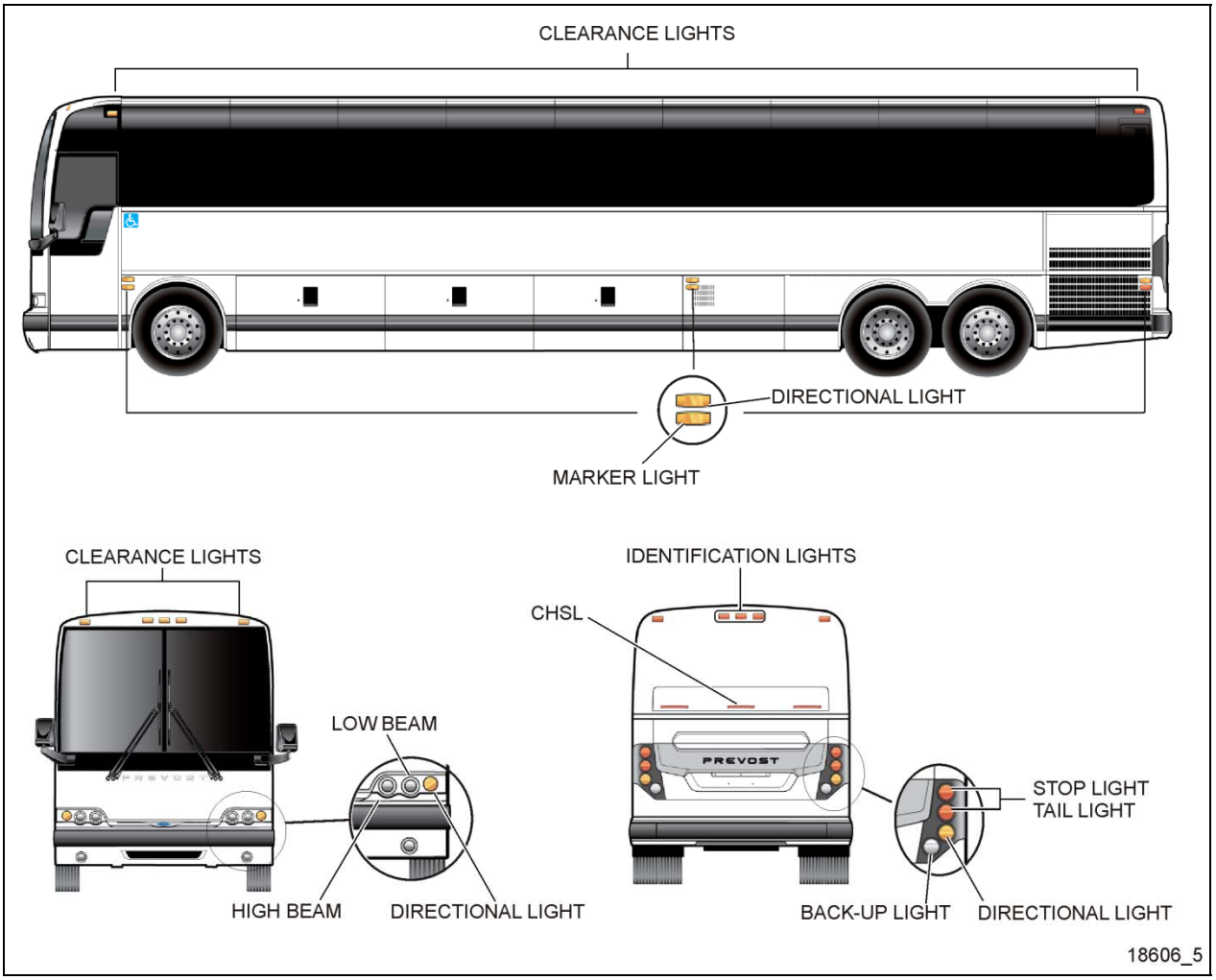

FIGURE 62: VARIOUS LIGHTS LOCATION

12.2 STEPWELL LIGHTS

Two Stepwell lights are illuminated when the door opening system is activated.

12.2.1 Bulb Removal and Replacement

Proceed as follows to replace a defective bulb:

1. Unscrew the two Phillips-head screws retaining the lens to the wall, and remove it.
2. With the light lens removed, pull bulb from the lamp while applying lateral pressure.
3. Install the new bulb into the lamp.
4. Position the light lens and install it.

12.3 DRIVER'S AREA LIGHTS

Two halogen ceiling lights are installed over the stepwell and the driver's area. These lights are frequently used for night-time operation when passengers board or leave coach.

12.3.1 Bulb Removal and Replacement

1. Unsnap the lamp with a flat head screwdriver and remove it.
2. Pull the defective bulb out of the socket.
3. Install the new bulb by pushing it in position.
4. Replace the lamp by snapping it back in place.

CAUTION

Do not touch halogen bulbs with bare hands as natural oils on skin will shorten bulb life span.

12.4 PASSENGER SECTION LIGHTING

The passenger section of coach is lit by two types LED strips installed on the parcel racks. The aisle or *indirect lights* are located on front of parcel racks, and provide soft, indirect cabin lighting and parcel rack interior lighting.

More powerful lighting for general is provided by LED strips located under the parcel racks, close to the windows. 24 volt power is available for this lighting. In order to save batteries during extended periods, the battery charger can be connected prior use.

Moreover, adjustable reading lamps are installed under the parcel racks for passenger accommodation.

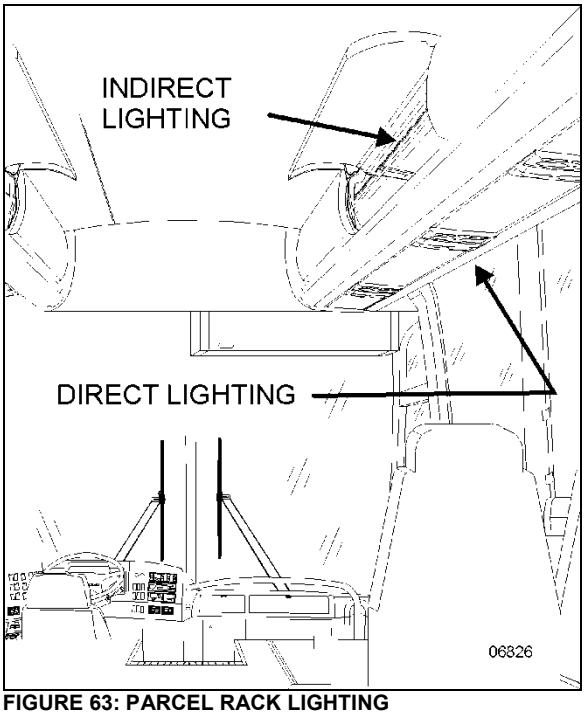

FIGURE 63: PARCEL RACK LIGHTING

12.4.1 LED Indirect Lighting / Parcel Rack Interior Lighting

1. Open the parcel rack access door.
2. Using a Phillips head screwdriver, unscrew and remove the existing LED strip (FIGURE 64).
3. Install a new LED strip as a complete unit.

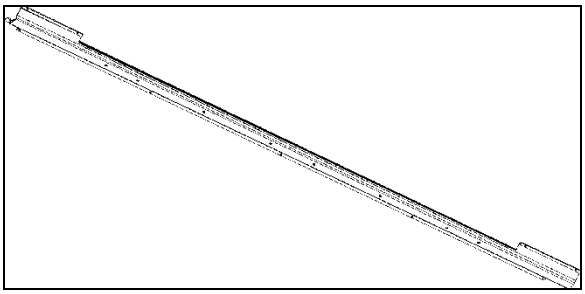

FIGURE 64: LED INDIRECT LIGHTING IN PARCEL RACK

12.4.2 LED Direct Lighting

1. Start by pulling out the corner of the lens then delicately peeling it out of its seat.
2. Unscrew and remove the LED strip assembly (4 Phillips screws).
3. Install a new LED strip assembly.

4. Replace the screen lens by first inserting one side in the seat, then push the other side in and snap it in place by running it in from one corner to the next.

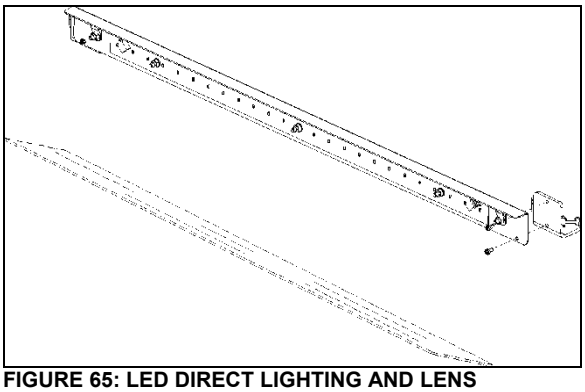

FIGURE 65: LED DIRECT LIGHTING AND LENS

12.4.3 Removal and Replacement of Reading Lamp Bulb

1. Engage the tool (#830164) over the lamp and turn one quarter turn counterclockwise. Then, remove the tool slowly.
2. Pull the bulb socket off the reading lamp unit.
3. Push and turn bulb counterclockwise, then pull it out of the socket.
4. Install new bulb in the socket, then push and turn clockwise to lock bulb in position.
5. Push the bulb socket in the reading lamp unit.
6. Position the reading lamp with the tool (#830164), turn one quarter turn clockwise.

12.5 ENGINE COMPARTMENT LIGHTING

Three 24-volts LED modules illuminate the engine compartment when the following conditions are met:

1. The engine compartment rear door or curbside door is open.
2. Ignition switch in ON or ACC position.

The light module is sealed thus not serviceable.

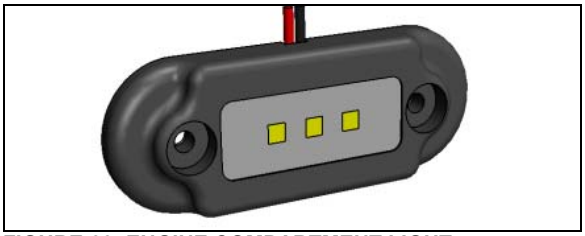

FIGURE 66: ENGINE COMPARTMENT LIGHT

13. SPECIFICATIONS

AGM Battery

Make..... Volvo
Type ..... Absorbed Glass Mat
Terminal type ..... Top Stud
Group size.....8A31
Volts 12
Load test amperage 400
Reserve capacity (minutes)..... 200

Cold cranking (in amps)
-At 0°F (-18°C).....800 (each battery)

Maximum dimensions (inches/mm)
-Length (including flange)..... 12.93/328
-Width 6.7/169
-Height (including top posts) 9.3/237
-Approximate weight (lbs/kg)..... 61.7/28

Alternator

Make..... BOSCH
Series .....HD 10
Amperes 150
Volts 28.4
Output Power .....3 Kw
Ground ..... negative

Battery equalizer (Prime)

Make..... Vanner
Model.....Vann-bus 80-Series
Amperes ..... 100 amps

Starter

Make.....Mitsubishi Electric Corporation (MELCO)
Type 105P70
Voltage 24

No-load test
-Volts 23.5
-Max. current draw .....125 amperes
-Min. rpm .....3000 rpm

Starter solenoid

Make.....Mitsubishi Electric Corporation (MELCO)
Pull In Voltage .....16 volts max.

ELECTRICAL CONNECTORS PROTECTION

PROCEDURE NO SAV00002E	NOVEMBER 2009 REVISION 02

Kent Sealer	 680324
Sprayed sealer. It is used for structure ground connections. It prevents corrosion and ensures maximum contact. Refer to table for proper use. Apply this product once installation is finished.	
Warning: *It is very important to be in a well ventilated area when applying this product.*	

Nyogel Grease	 3 Oz. tube: 681095 Container 500g: 683409
Grease-type product. It is used to facilitate connectors or terminals insertion. Refer to table for proper use of Nyogel grease. It is preferable to apply Nyogel into the female part of connector. Apply this product as the last assembling operation.	

"Color Guard" black rubber coating	 684013
This product may be applied with a brush. It is used for structure ground connections or other connections that will most likely not be disconnected later on. Apply this product once installation is finished.	
Warning *: Wear goggles and rubber gloves.*	

Vehicle Zoning

X3-MTH

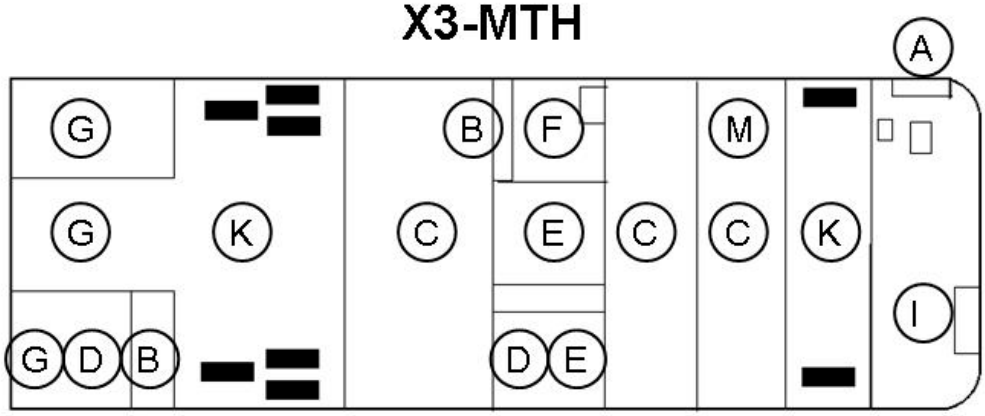

REAR **FRONT**

H3- VIP

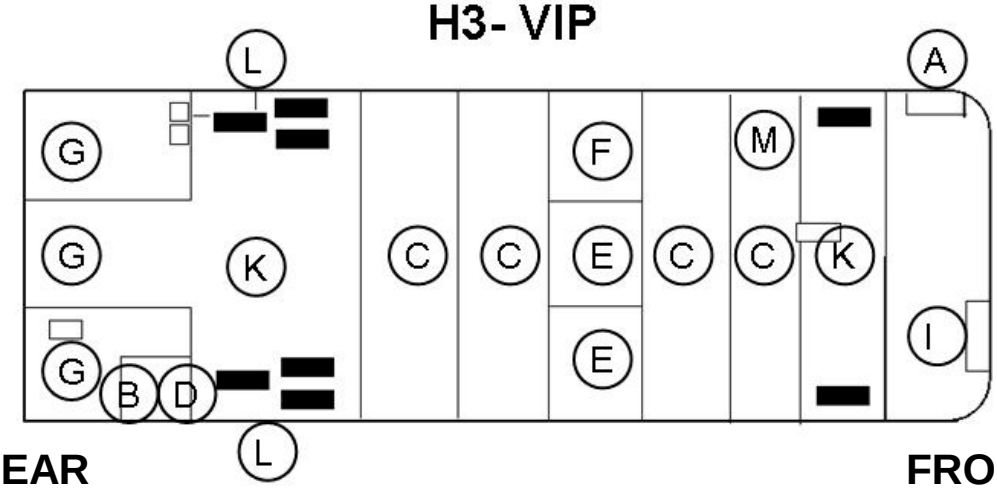

REAR **FRONT**

Electrical Connectors Protection Procedure Table

Zone	Component	Model				Product	Note
		MTH	X3	H3	VIP		
A- Front Elect. Compt	Diode Block	X	X	X	X	Nyogel	Accepted to ease connection
A- Front Elect. Compt	Customer Terminal Block	X	X	X	X	Nothing	
A Front Elect. Compt	Terminal Block Electronic Ground	X	X	X	X	Kent	
A- Front Elect. Compt	Structure Ground	X	X	X	X	Kent	
A- Front Elect. Compt	Electronic Module	X	X	X	X	Nothing	
A- Front Elect. Compt	VEC Power	X	X	X	X	Nothing	
A- Front Elect. Compt	70A Relay	X	X	X	X	Nyogel	Accepted to ease connection
A- Front Elect. Compt	Control Relay	X	X	X	X	Nyogel	Accepted to ease connection
A- Front Elect. Compt	All connectors except those specified in this zone	X	X	X	X	Nothing	
A- Front Service Compt	All connectors except those specified in this zone	X	X	X	X	Nothing	
B- Rear Elect. Compt/panel	Customer Terminal Block	X	X	X	X	Nothing	
B- Rear Elect. Compt/panel	Power Terminal Block		X			Nothing	
B- Rear Elect. Compt/panel	Circuit Breaker		X	X	X	Nothing	
B- Rear Elect. Compt/panel	Circuit Breaker	X				Kent	Surface only
B- Rear Elect. Compt/panel	Volvo Air Heater Fuse			X		Nothing	
B- Rear Elect. Compt/panel	Structure Ground		X	X	X	Kent	
B- Rear Elect. Compt/panel	Electronic Module	X	X	X	X	Nothing	
B- Rear Elect. Compt/panel	VEC Power		X	X	X	Nothing	
B- Rear Elect. Compt/panel	VEC Power	X				Kent	Surface only
B- Rear Elect. Compt/panel	70A Relay	X	X	X	X	Nyogel	Accepted to ease connection
B- Rear Elect. Compt/panel	Master Switch Relay		X	X	X	Nothing	
B- Rear Elect. Compt/panel	Master Switch Relay	X				Kent	Surface only
B- Rear Elect. Compt/panel	Control Relay	X	X	X	X	Nyogel	Accepted to ease connection
B- Rear Elect. Compt/panel	200A Power Relay	X	X	X	X	Nothing	
B- Rear Elect. Compt/panel	Power Relay Stud		X			Nothing	
B- Rear Elect. Compt/panel	All connectors except those specified in this zone	X	X	X	X	Nothing	
B- Rear Elect. Compt/panel	Vanner			X	X	Kent	

Zone	Component	Model				Product	Note
		MTH	X3	H3	VIP		
C- Baggage Compt	Structure Ground	X	X	X	X	Color Guard or Kent	
C- Baggage Compt	Door Switch	X	X	X	X	Nyogel	Accepted to ease connection
C- Baggage Compt	Door lock Actuator Module (switch and solenoid)	X	X	X	X	Nyogel	Accepted to ease connection
C- Baggage Compt	Electronic Module	X	X	X	X	Nothing	
C- Baggage Compt	Slide-out Motor	X			X	Nyogel	Accepted to ease connection
C- Baggage Compt	WCL Junction Panel		X	X		Nothing	
C- Baggage Compt	120V Inverter Connector	X	X	X	X	Nothing	
C- Baggage Compt	Stud inverter		X	X		Color Guard or Kent	
C- Baggage Compt	WCL Remote Control		X	X		Nyogel	Accepted to ease connection
C- Baggage Compt	All connectors except those specified in this zone	X	X	X	X	Nothing	
D- Battery Compt	Battery terminals	X	X	X	X	Nyogel	
D- Battery Compt	Structure Ground	X	X			Color Guard or Kent	
D- Battery Compt	Electronic Module	X	X	X	X	Nothing	
D- Battery Compt	All connectors except those specified in this zone	X	X	X	X	Nothing	
D- Battery Compt	Battery Equalizer	X	X			Kent	
E- Condenser Compt	Fuel sender	X	X	X	X	Kent	
E- Condenser Compt	Structure Ground	X	X	X	X	Color Guard or Kent	
E- Condenser Compt	Door Switch	X	X	X	X	Nyogel	Accepted to ease connection
E- Condenser Compt	Condenser Motor	X	X	X	X	Nothing	
F- Evaporator Compt	Diode Block	X		X	X	Nyogel	Accepted to ease connection
F- Evaporator Compt	Structure Ground	X	X	X	X	Color Guard or Kent	
F- Evaporator Compt	Electronic Module	X		X	X	Nothing	
F- Evaporator Compt	Evaporator Motor	X	X	X	X	Color Guard or Kent	
F- Evaporator Compt	200A Power Relay	X		X	X	Nothing	
F- Evaporator Compt	All connectors except those specified in this zone	X		X	X	Nothing	

Zone	Component	Model				Product	Note
		MTH	X3	H3	VIP		
G- Engine Compt	120A Alternator	X	X	X	X	Color Guard	
G- Engine Compt	Booster Block (+)		X	X	X	Color Guard	
G- Engine Compt	Starter Terminal	X	X	X	X	Color Guard	
G- Engine Compt	Volvo Air Element Terminal	X	X	X	X	Color Guard	
G- Engine Compt	Customer Terminal Block	X				Nothing	
G- Engine Compt	Power Terminal Block		X			Color Guard	
G- Engine Compt	Breaker	X				Kent	
G- Engine Compt	Air Heater Fuse & Relay	X	X			Nyogel	Accepted here
G- Engine Compt	Engine Ground	X	X	X	X	Color Guard	
G- Engine Compt	Structure Ground	X	X	X	X	Color Guard	
G- Engine Compt	VEC Power	X				Kent	
G- Engine Compt	Master Switch Relay	X				Kent	
G- Engine Compt	Starter Relay	X	X			Color Guard	
G- Engine Compt	All connectors except those specified in this zone	X	X	X	X	Nothing	
H- Vehicle Exterior	ABS Sensor	X	X	X	X	Nothing	
H- Vehicle Exterior	Docking & Cornering Lamps	X	X	X	X	Nyogel	Accepted to ease connection
H- Vehicle Exterior	Marker Light	X	X	X	X	Nothing	
H- Vehicle Exterior	Mirror	X	X	X	X	Nothing	
H- Vehicle Exterior	Light Module	X	X	X	X	Nothing	
H- Vehicle Exterior	Stop light, Backup light, Directional Signal Light	X	X	X	X	Nothing	
I- Vehicle Interior	Diode Block	X	X	X	X	Nyogel	Accepted to ease connection
I- Vehicle Interior	Junction Block		X	X		Nothing	
I- Vehicle Interior	A3 & A4 Transmission Retarder Hand lever	X	X	X	X	Nyogel	Accepted to ease connection
I- Vehicle Interior	C258 & C259 Multi-function Lever Connector	X	X	X	X	Nyogel	Accepted to ease connection
I- Vehicle Interior	Audio - video Connection		X	X		Nothing	
I- Vehicle Interior	Defrost Compt Ground	X	X	X	X	Kent	
I- Vehicle Interior	Video Plate Direct Ground		X	X		Nothing	
I- Vehicle Interior	Structure Ground		X	X		Kent	
I- Vehicle Interior	Terminal Block Ground		X	X		Nothing	

Zone	Component	Model				Product	Note
		MTH	X3	H3	VIP		
I- Vehicle Interior	Dashboard Switch	X	X	X	X	Nothing	
I- Vehicle Interior	Electronic Module	X	X	X	X	Nothing	
I- Vehicle Interior	Slide-out Motor	X			X	Nyogel	Accepted to ease connection
I- Vehicle Interior	Wiper Motor	X	X	X	X	Nyogel	Accepted to ease connection
I- Vehicle Interior	200A Power Relay	X	X	X	X	Nothing	
I- Vehicle Interior	70A Relay	X	X	X	X	Nyogel	Accepted to ease connection
I- Vehicle Interior	Control Relay	X	X	X	X	Nyogel	Accepted to ease connection
I- Vehicle Interior	All connectors except those specified in this zone	X	X	X	X	Nothing	
I- Vehicle Interior	All components except those specified in this zone	X	X	X	X	Nothing	
K- Front & Rear Wheelhousing	All connectors except those specified in this zone	X	X	X	X	Nothing	
K- Front & Rear Wheelhousing	All components except those specified in this zone	X	X	X	X	Nothing	
L- Compartment above rear wheelhousing	All connectors except those specified in this zone			X	X	Nothing	
L- Compartment above rear wheelhousing	All components except those specified in this zone			X	X	Nothing	
M- Slide-out Panel	All connectors except those specified in this zone	X			X	Nothing	
M- Slide-out Panel	All components except those specified in this zone	X			X	Nothing	

MAINTENANCE INFORMATION

MI15-24

DATE : MAY 2015	SECTION: 06 - Electrical	
SUBJECT : **POWER CABLES INSPECTION GUIDELINES**		

APPLICATION

Model	VIN
All Prevost models	

DESCRIPTION

It is important to carry out a regular inspection of the vehicle power cables. Power cables in poor condition can be the cause of failures and serious damages in the engine compartment.

Please note that some images in this document may represent arrangements different from those found on vehicles of former generations. However, inspection criteria and points to check presented in this document remain applicable in essence for all models of Prevost vehicles.

POWER CABLES MAINTENANCE SCHEDULE	
DESCRIPTION	**INTERVAL**
Perform power cables inspection	Every 3 months

POWER CABLES

– The power cables are those through which flow the highest currents. These cables are those with the largest electrical conductor diameters on the vehicle.

– The power cables are 1/0, 2/0, 3/0 wire gauges respectively Ø0.325in, Ø0.365in, Ø0.409in.

Note: not to be confused with the 1, 2, 3 wire gauges that are actually smaller.

– There are power cables at the following locations:

- On the **alternators positive (+) stud terminal** and from there, up to Bussman junction block in the electrical compartment (Figure 1, Figure 2, Figure 3).

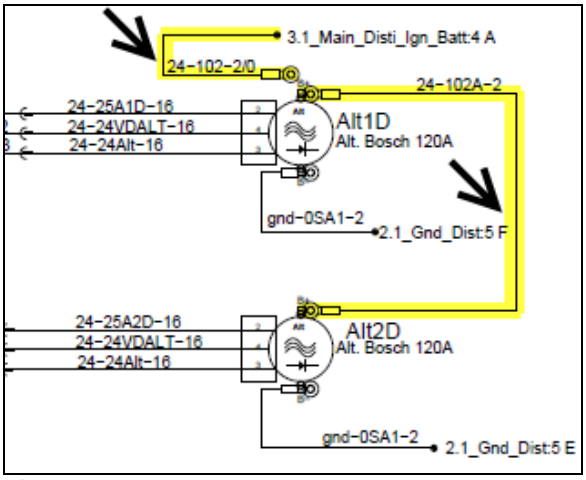

Figure 1

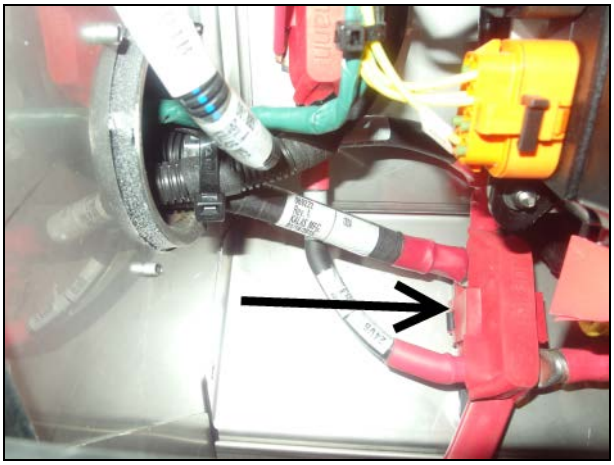

Figure 2: Bussman Junction Block - X3 Series.

Figure 3: Bussman Junction Block - H3 Series.

- On the **starter positive (+) stud terminals** and from there, up to Bussman junction block in the electrical compartment (Figure 4, Figure 5).

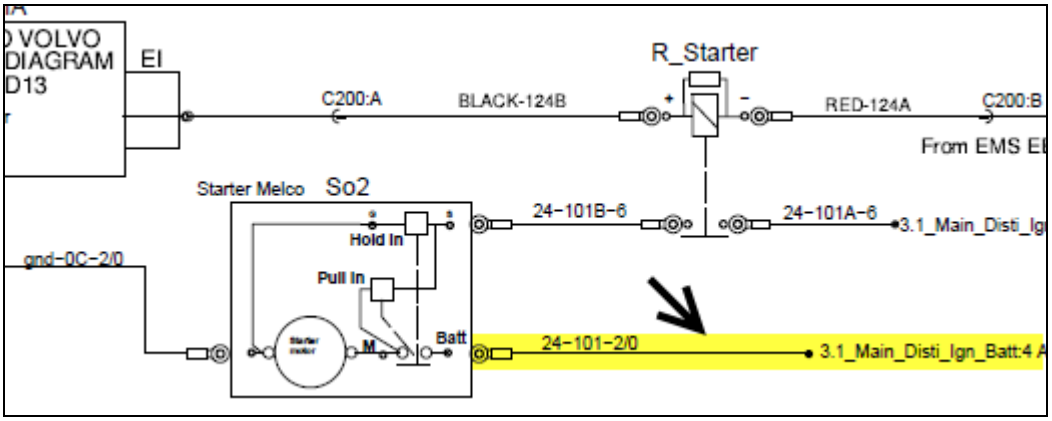

Figure 4

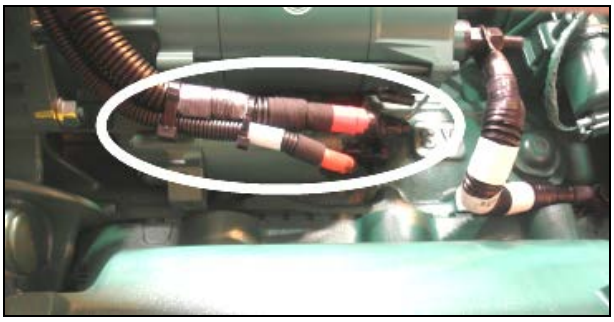

Figure 5: starter cables

- In the electrical compartment, **<u>connected to Bussman junction block</u>** (Figure 6).

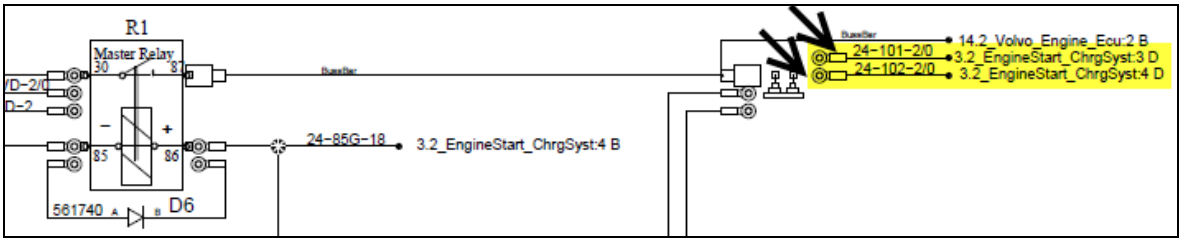

Figure 6

- In the **battery compartment** between **battery no2 and master relay R1** (Figure 7).

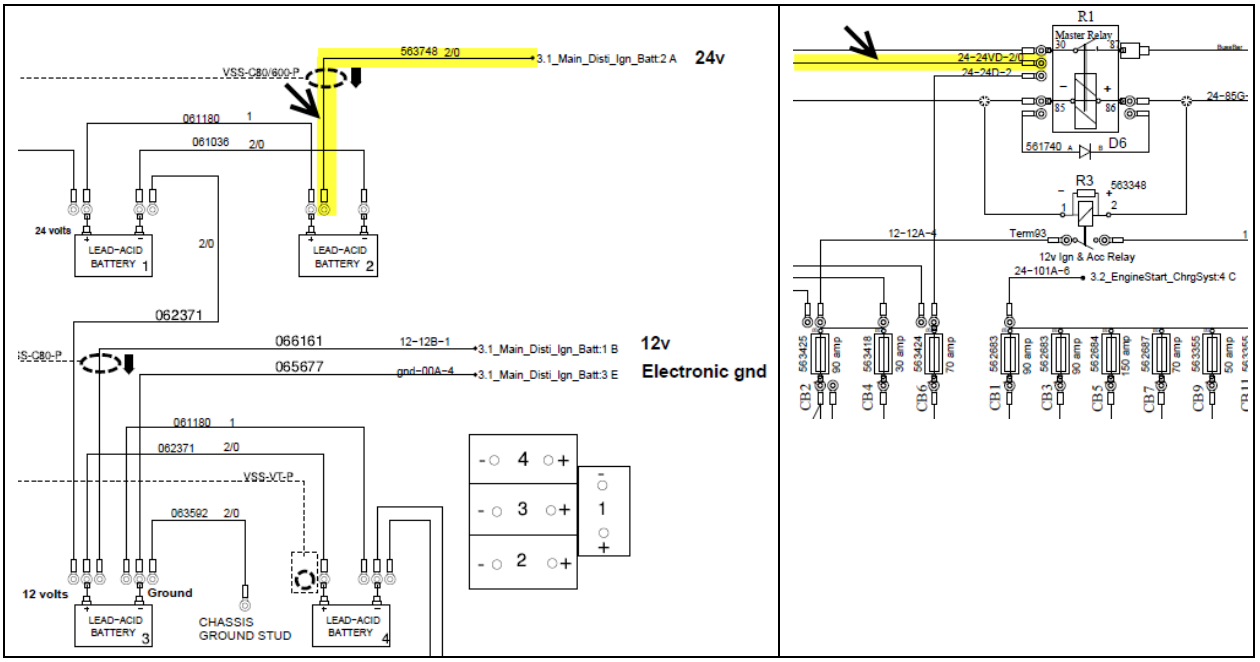

Figure 7

- Between **Bussman junction block** and **main circuit breakers' bus bar** (Figure 8).

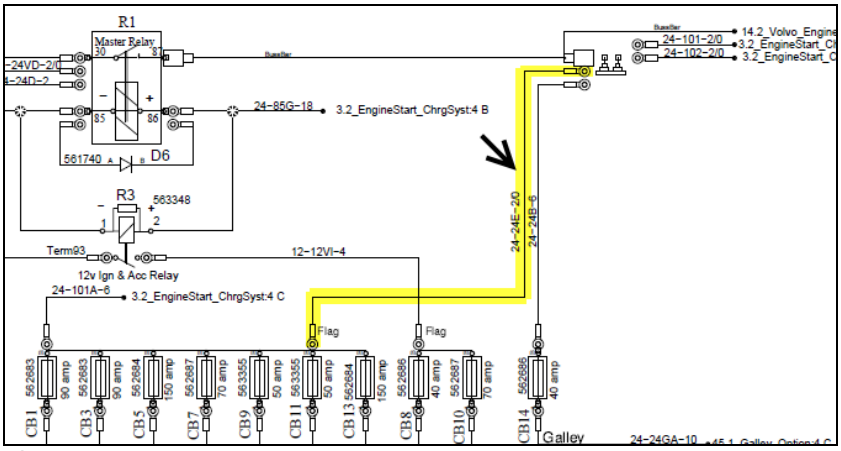

Figure 8

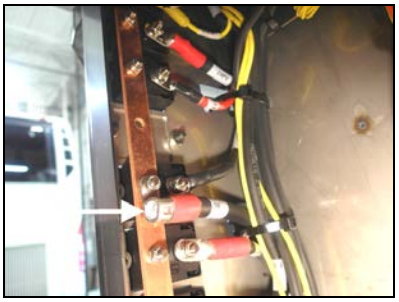

Figure 9: Power cable on main circuit breakers' bus bar.

PROCEDURE

DANGER

Park vehicle safely, apply parking brake, stop engine. Prior to working on the vehicle, set the ignition switch to the OFF position and trip the main circuit breakers equipped with a trip button. On Commuter type vehicles, set the battery master switch (master cut-out) to the OFF position.

POWER CABLES GENERAL INSPECTION CRITERIA

1. **Make sure that the power cables are properly secured with appropriate fasteners so that they do not move. Movement of the cables can cause wear of the extruded protective sheath, strains on stud terminals and ring cable lugs.**

2. **Ensure that the power cables do not rub on other cables or other components.**

3. **Make sure ring cable lugs are securely attached to the stud terminals, that the retaining nut is tightened. Also, make sure that cable lug crimping holds firmly on copper conductor.**

OTHER THINGS TO CHECK

- Check for damages caused by electric arcs with loss of material along the copper conductor.
- Check for damaged cable extruded sheath and having lost its insulating properties.
- Bosch T1 alternator: ensure that the rubber grommets at the rear cap of the alternator are present.
- P-clamp type cable clamps must be suitable for cable diameter. The cable must remain in the P-clamp without moving or rubbing, thus oversized P-clamps are not allowed. Inspect the corrugated protective sheath passing through the P-clamp for signs of wear.
- At certain locations, power cables are protected by a corrugated protective sheath and should remain as such.

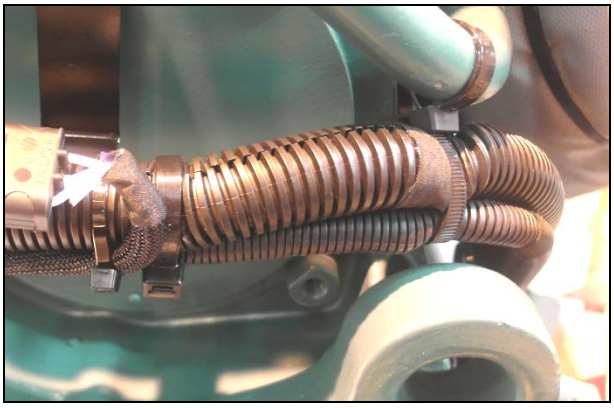

Figure 10: starter cables in a corrugated protective sheath.

- Ensure that the power cables do not rub on bolt heads or sharp metal edges that can cut or wear the cable extruded sheath.
- For power cables passing through a corrugated protective sheath, it is recommended to apply two layers of fabric tape every 3 to 6 inches minimum to prevent the cable from coming out of the

corrugated protective sheath (Figure 11). The ends of the corrugated protective sheath should be covered with fabric tape (Figure 12).

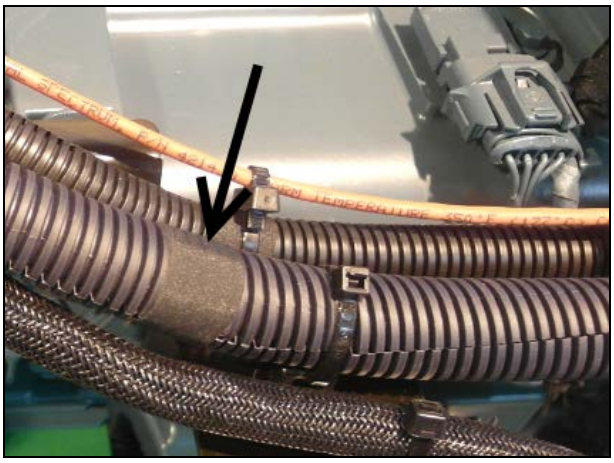

Figure 11: Two layers of fabric tape applied every 3 to 6 inches to prevent the cable from coming out of the corrugated protective sheath.

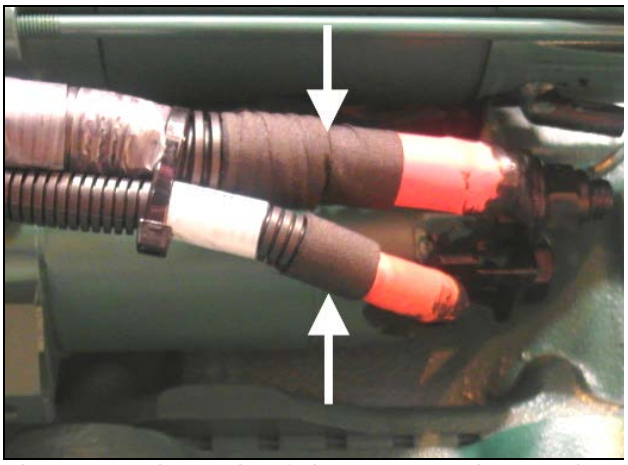

Figure 12: The ends of the corrugated protective sheath should be covered with fabric tape.

- Stud terminal nuts properly tightened. Use a nut with nylon insert to replace a similar nut where applicable. Protect ring cable lugs against tightening force by placing a flat washer between nut and ring cable lug.

When necessary, use fasteners that secure cables while preventing rubbing

RING CABLE LUGS

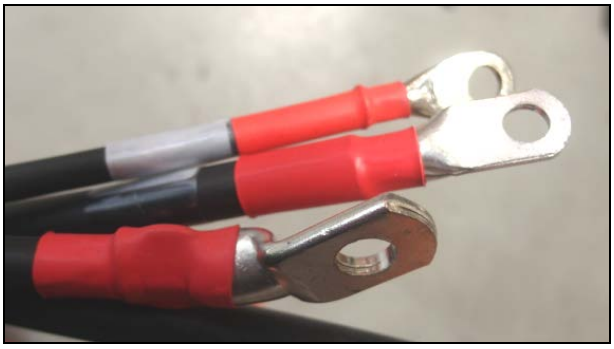

Figure 13: Cable lugs must be closed type, crimped or welded.

- Ring cable lugs should not be distorted.
- Ring cable lugs should not suffer strains that can deform.

- Ring cable lugs must be installed with smooth washers and nuts to prevent damage to the cable lug when tightening.

Figure 14: Power cable shouldn't be bent just next to the cable lug. Angled cable lugs are used to avoid mechanical stress.

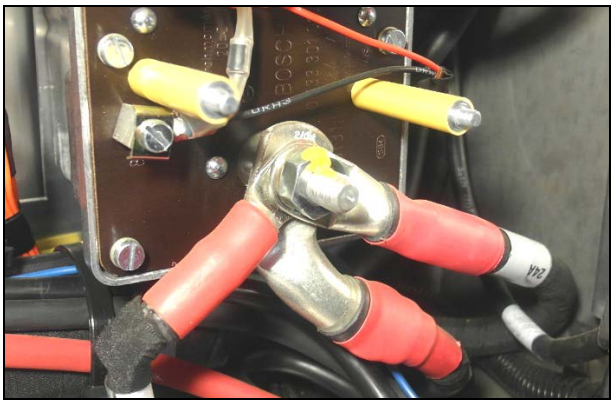

Figure 15: When several terminals are connected on a single stud terminal, the largest cable lug must be placed first, followed by the second larger and so on. Cable lugs should be distributed around the stud terminal in a way that no cable lug is distorted when tightening the nut.

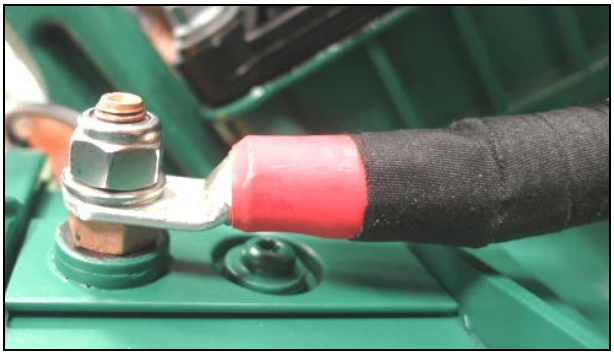

Figure 16: No exposed or broken copper strands.

- A shrink tubing (or fabric tape) should cover the copper strands.
- Ensure that the power cables and ground wire are not stretched tight.
- Ensure that the cable lugs are still properly crimped on the copper conductor, that the conductor strands are not broken so that the power cable retain its capacity and ensure unrestricted current flow.

BATTERY CABLES

- Battery interconnection cables must be checked too :

– Ensure the cables are properly fastened to battery posts and that the cables are in good condition (consult battery manufacturer documentation for appropriate tightening torque).

– No corroded or cut copper strands. No apparent copper strands. Protective sheath in good condition, no cuts, no rubbing against metal edges.

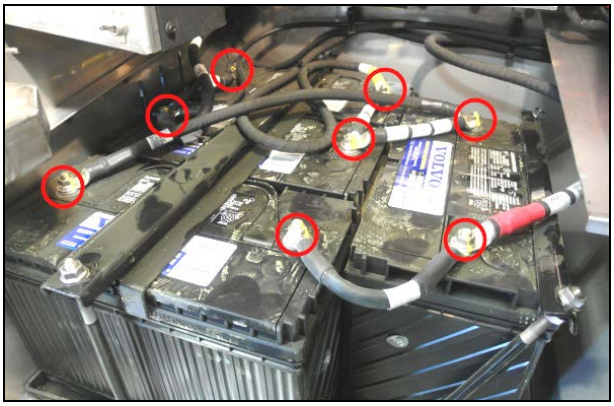

Figure 17: battery bank

STEEL P-CLAMPS

Figure 18: P-clamps are no longer used to secure power cables, but they can nevertheless be found on coaches of older generations. The piece of rubber that protects cable against the P-clamp steel loop must absolutely be in place. Replace any P-clamps where the rubber piece is missing, broken or likely to separate from the steel loop.

NOTE
Unlike steel P-clamps, plastic clamps have the advantage of being not conductive. A good practice would be to replace P-clamps ***securing power cables*** *with appropriate nylon cable ties like the following:* **#507664 CABLE TIE, DOUBLE LOOP** **#509491 CABLE TIE, WIDE**

Figure 19: P-clamp with appropriate diameter prevents the power cable or corrugated protective sheath from moving and rubbing inside the clamp.

ALTERNATORS

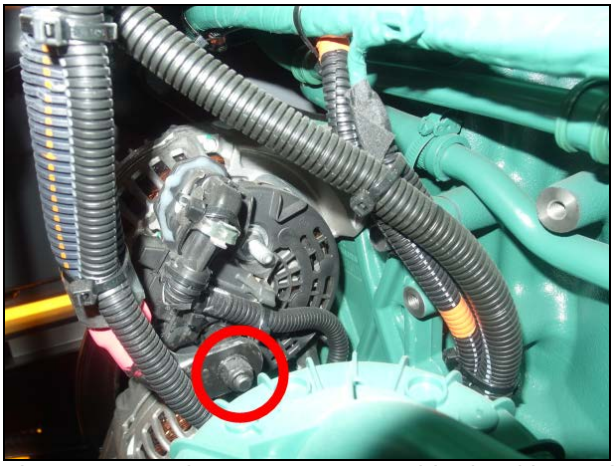

Figure 20: Make sure power cables/positive cables (+) are properly connected to alternator, that stud terminal nuts are properly tightened.

TERMINAL NUT PRESCRIBED TORQUE

Bosch HD10
- B1(+) terminal: 10 lbf-ft
- ground: 6 lbf-ft

Bosch T1
- D+: 21-28 lbf-in
- B+, B-: 88-115 lbf-in
- W: 36-48 lbf-in

Delco 50DN
- DC Output: 30-35 lbf-ft
- F1, F2, Relay: 6 lbf-ft

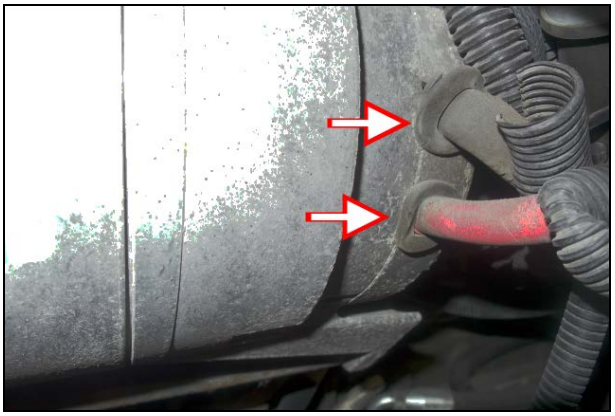

Figure 21: Bosch T1 alternator with the two required rubber grommets. Alternator cables connected to the alternator stud terminals must be protected against metal edges with rubber grommets.

Figure 22: Fire in engine compartment caused by rubbing of power cable against metal edge of Bosch T1 alternator rear cover. Lower rubber grommet was missing when fire occured. Evidence of electrical arc can be seen.

CORROSION PROTECTION

- Power cable connections on alternators, starter and ground connections exposed to water, dust, etc. should be protected against corrosion with Loctite Color Guard rubber coating (**Figure 23**) (Prevost p/n: 684013).

Figure 23: Loctite Color Guard.

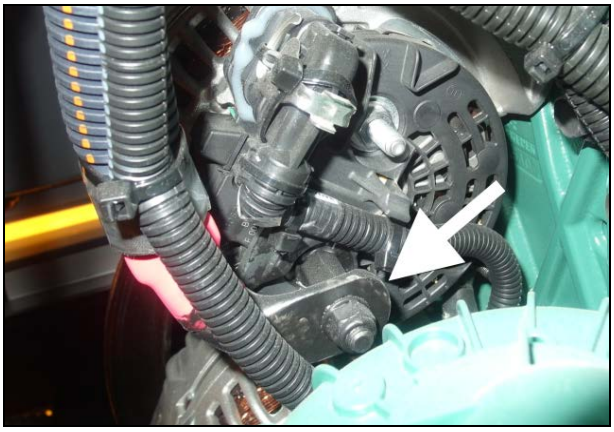

Figure 24: Upper alternator power cable lug protected with Color Guard rubber coating.

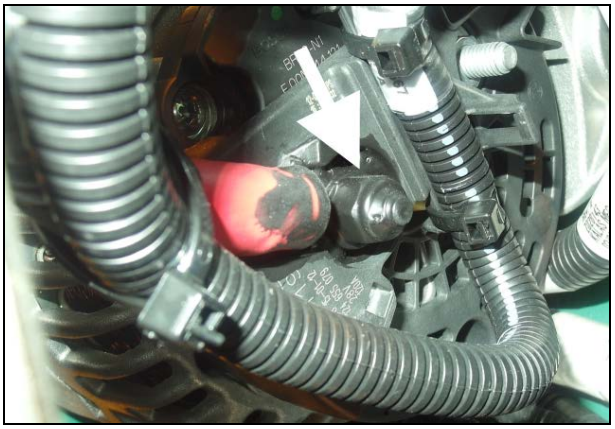

Figure 25: Lower alternator power cable lug protected with Color Guard rubber coating.

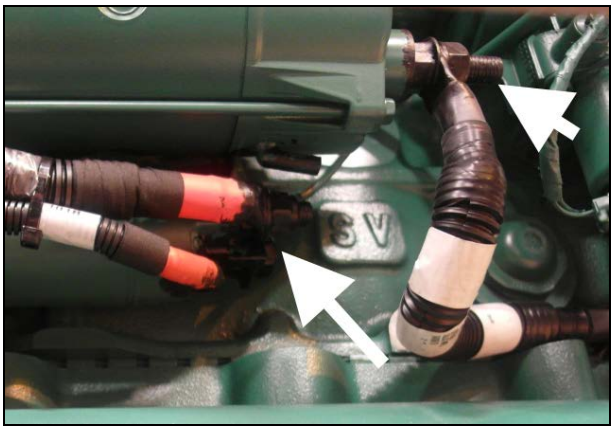

Figure 26: Starter power cable and ground cable lugs protected with Color Guard rubber coating.

PARTS / WASTE DISPOSAL

Discard according to applicable environmental regulations (Municipal/State[Prov.]/ Federal)

Access all our Service Bulletins on https://secureus5.volvo.com/technicalpublications/en/pub.asp
Or scan the QR-Code with your smart phone.

*E-mail us at **technicalpublications_prev@volvo.com** and type "ADD" in the subject to receive our warranty bulletins by e-mail.*

PREVOST

MAINTENANCE INFORMATION

MI16-17

DATE :	FEBRUARY 2016	**SECTION:**	06 - Electrical
SUBJECT :	**BOSCH HD10 ALTERNATOR REMOVAL AND INSTALLATION**		

Please, get the latest revision of Maintenance Information MI16-17 on Prevost Technical Publications web site:

https://techpub.prevostcar.com/en/

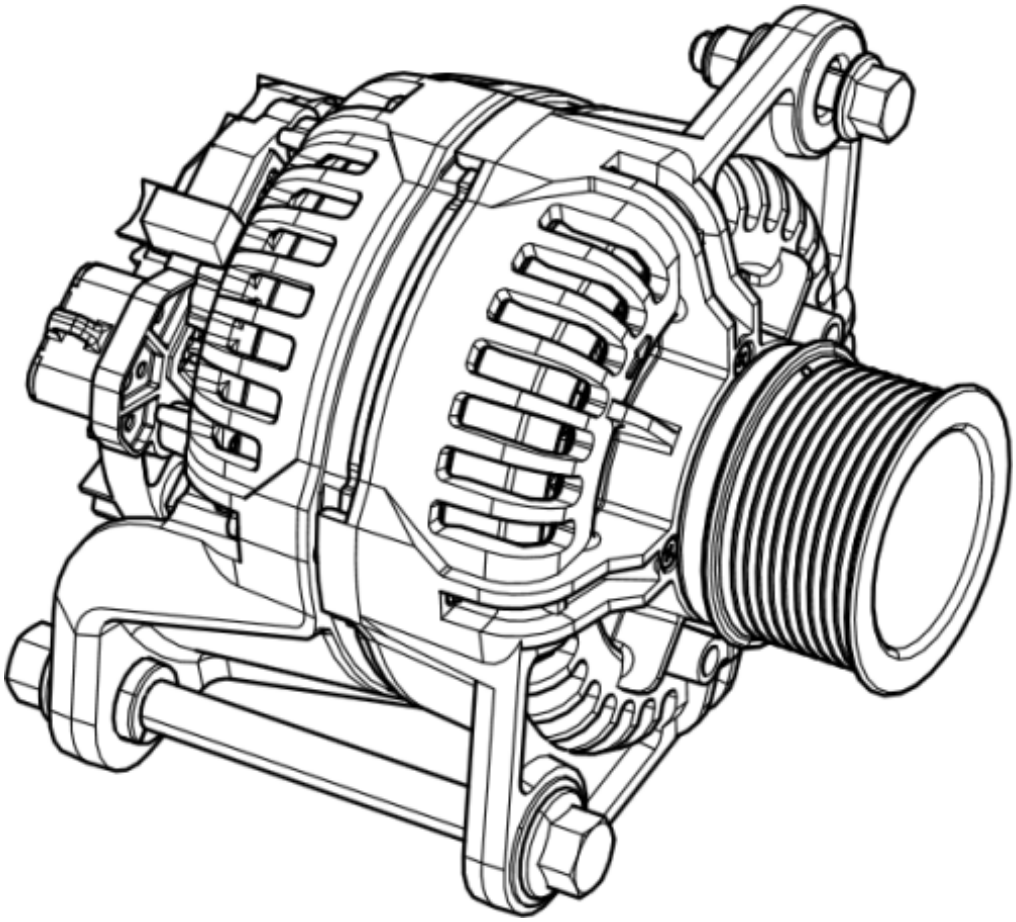

CONTENT

1. TORQUE TABLES 3

1.1 ALLISON TRANSMISSION 3
1.2 VOLVO I-SHIFT TRANSMISSION 4

1. DESCRIPTION 5

1.3 ALLISON AUTOMATIC TRANSMISSION 5
1.3.1 Retarder 5
1.4 VOLVO I-SHIFT TRANSMISSION 5

2. WELDING PROCEDURES 6

3. ALLISON TRANSMISSION MAINTENANCE 6

3.1 MANUAL FLUID LEVEL CHECK 6
3.1.1 Cold Check 7
3.1.2 Hot Check 7
3.2 FLUID LEVEL CHECK USING THE PUSHBUTTON SHIFT SELECTOR 8
3.3 RECOMMENDED AUTOMATIC TRANSMISSION FLUID 8
3.3.1 Importance of Proper Fluid Level 9
3.3.2 Keeping Fluid Clean 9
3.3.3 Oil Contamination 9
3.3.4 Metal Particles 9
3.3.5 Coolant Leakage 10
3.4 CONTROL SYSTEM PROGNOSTICS 10
3.4.1 Normal Prognostics Indication at Engine Start 10
3.4.2 Oil Life Monitor 10
3.4.3 Filter Life Monitor 11
3.4.4 Transmission Health Monitor 12
3.5 OIL AND FILTER CHANGE INTERVAL 14
3.5.1 Oil and Filter Change Interval with Prognostics Mode Disabled 15
3.5.2 Oil and Filter Change Interval with Prognostics Mode Enabled 15
3.6 FLUID AND FILTER CHANGE PROCEDURE 16
3.6.1 Drain 16
3.6.2 Refill transmission 16
3.7 CLEANING AND INSPECTION OF ALLISON AUTOMATIC TRANSMISSION 17
3.7.1 Breather 17

4. ALLISON TRANSMISSION OIL COOLER REMOVAL 17

4.1 TRANSMISSION WITHOUT RETARDER 17
4.2 TRANSMISSION WITH RETARDER 17

5. ALLISON TRANSMISSION INSTALLATION 18

6. ALLISON TRANSMISSION TROUBLESHOOTING 20

6.1 DIAGNOSTIC TROUBLESHOOTING CODES (DTC) — ALLISON 5TH GENERATION CONTROLS 20
6.1.1 Using Shift Selector for Accessing Diagnostics Information 20
6.1.2 Display Sequence 21
6.1.3 Diagnostic Code Display and Clearing Procedure 21
6.1.4 Exiting Diagnostic Mode 21
6.1.5 Diagnostic Trouble Code Response 21
6.2 DIAGNOSTIC TROUBLESHOOTING CODES (DTC) LIST - ALLISON 5TH GENERATION CONTROLS 22

7. ALLISON TRANSMISSION REMOVAL 25

8. VOLVO I-SHIFT TRANSMISSION MAINTENANCE 26

8.1 TRANSMISSION OIL TYPE 26
8.2 CHECKING OIL LEVEL 26
8.3 OIL DRAINS INTERVAL 27
8.4 OIL CHANGE 27

9. VOLVO I-SHIFT TRANSMISSION TECU FAULT CODES 28

10. VOLVO I-SHIFT TRANSMISSION GSECU FAULT CODES 67

11. SPECIFICATIONS 69

1. TORQUE TABLES

1.1 ALLISON TRANSMISSION

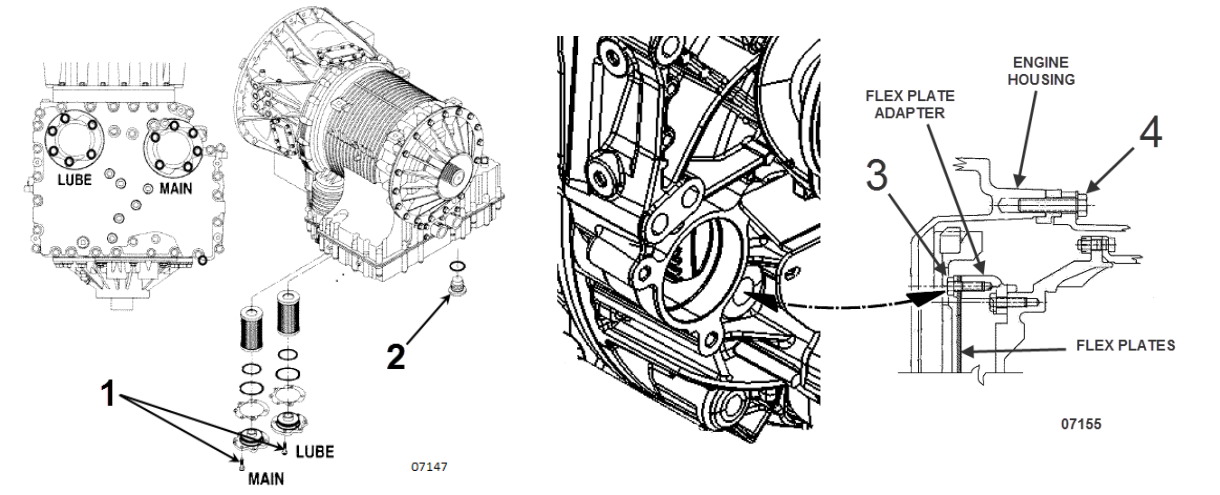

ALLISON TRANSMISSION		
No	DESCRIPTION	TORQUE
1	Lube and main filter cover bolts	38-45 lb-ft (52-61 Nm)
2	Drain Plug	18-24 lb-ft (24-33 Nm)
3	Flex plate screws	24-30 lb-ft (33-41 Nm)
4	Transmission housing screws to engine housing	46-50 lb-ft (62-68 Nm)

1.2 VOLVO I-SHIFT TRANSMISSION

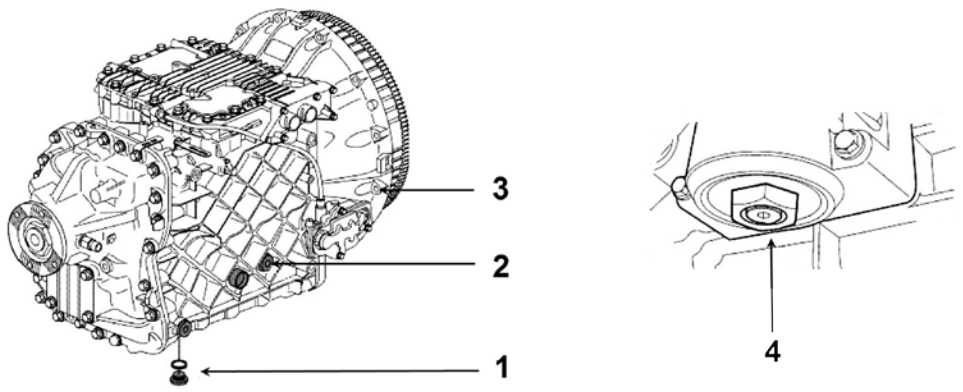

VOLVO I-SHIFT TRANSMISSION		
No	DESCRIPTION	TORQUE
1	Oil drain plug	18-24 lb-ft (24-33 Nm)
2	Oil fill plug	22-30 lb-ft (30-41 Nm)
3	Transmission mounting screws	66 lb-ft (89 Nm)
4	Filter housing drain plug	11-13 lb-ft (15-18 Nm)

1. DESCRIPTION

H3 and X3 Series vehicles may be provided with either an Allison automatic transmission or a Volvo I-Shift transmission.

1.3 ALLISON AUTOMATIC TRANSMISSION

The Series 4000 Allison Transmission has 6 speeds with two top range (fifth and sixth) overdrives.

Two variants are available: **B500** for commercially operated highway coaches and **4000MH** for private use motorhomes.

An electronic control allows the transmission to shift at exactly the right point on the engine's fuel consumption curve for best economy. Early lockup maintains the highest possible mechanical efficiency through the closely-spaced gear steps, culminating in two overdrive ratios. This combination allows progressive shifting techniques, where engine speeds are reduced for higher efficiency and lower fuel consumption.

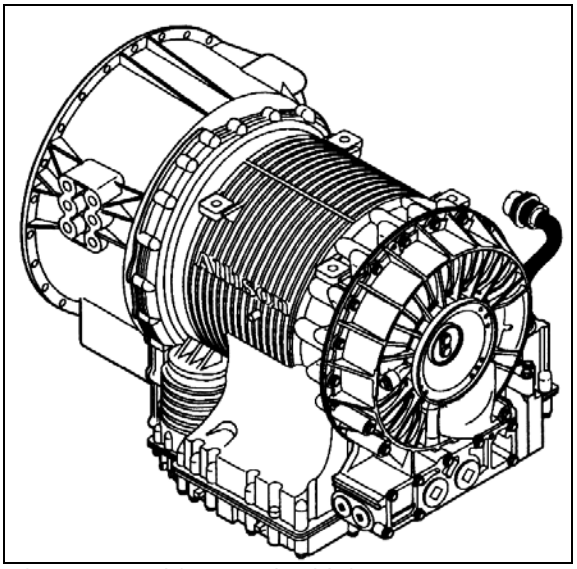

FIGURE 1: ALLISON TRANSMISSION (07075)

Gear selection and torque converter modes are controlled by a microcomputer-based electronic transmission management system. It is fed information regarding throttle position, operator range selection, engine speed, turbine speed, transmission output speed and various system pressures from special electronic sensors. With this information, it computes shift points and clutch pressures to meet immediate needs. Using closed loop adaptive logic, the electronic control looks at a number of parameters during the shift, and makes minute adjustments to match the shift to desired profile stored in its memory. It then looks at these adjustments and resets the parameters, which allow the transmission to quickly compensate for variations in load, terrain or environment and to adjust for clutch wear and engine power changes. A Diagnostic Data Reader can be connected to the electronic control unit to provide a self-check of all systems in the transmission. Five-digit trouble codes greatly reduce the time it takes to pinpoint potential problems. (Refer to paragraph *"9. TROUBLESHOOTING"* in this section).

1.3.1 Retarder

This optional auxiliary braking device for the automatic transmission is integrated into the basic envelope of the transmission and transmits its braking force directly to the propeller shaft. It requires no additional length and adds only 75 pounds (34 kg) of weight. Operation of the retarder is controlled electronically by the driver's use of the brake and/or by hand control lever.

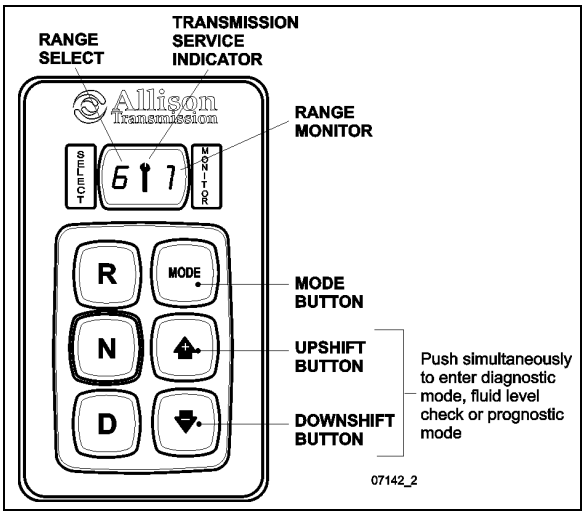

FIGURE 2: ALLISON PUSHBUTTON SHIFT SELECTOR

When activated, fluid enters a cavity and provides resistance to the turning of rotor blades revolving with the output shaft. This effectively slows the vehicle to the point where the service brakes are needed only for final stopping. The retarder is fully modulated and is compatible with ABS.

1.4 VOLVO I-SHIFT TRANSMISSION

The Volvo I-Shift transmission is a single countershaft transmission with 12 forward gears and two reverse gears. The I-Shift is an automated mechanical transmission.

If the I-Shift transmission system is to be used, the vehicle must have an electronic engine control unit as well as CAN communication. Since the clutch is automated (clutch pedal no

longer fitted), the driver no longer has to activate the clutch.

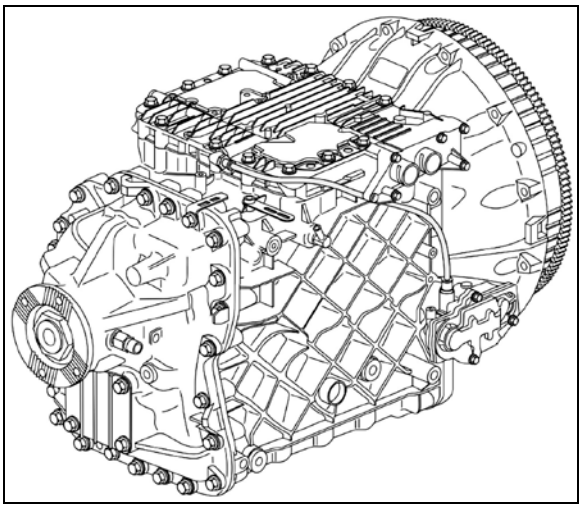

FIGURE 3: VOLVO I-SHIFT TRANSMISSION

The transmitted torque (both engine and braking) will be interrupted during gear shifting, in both driving and coasting conditions. There is no clutch pedal and the gear shifting is controlled by the transmission or the driver through the pushbutton shift selector.

When in fully automatic mode, gears are selected and shifts made by the electronic control unit. The driver can still intervene if he wishes to. All system functions required are shown on the display, e.g. neutral, gear change, clutch overload and diagnosis information.

2. WELDING PROCEDURES

These procedures are intended only for vehicles equipped with transmission electronic controls. When frame or other welding is required on the vehicle, precautions are to be taken to protect the electronic control components. Refer to section 00: GENERAL INFORMATION, paragraph 3: “Precautions to be observed before welding” for complete procedure.

3. ALLISON TRANSMISSION MAINTENANCE

3.1 MANUAL FLUID LEVEL CHECK

Take note that an oil level sensor (OLS) is standard in your transmission. With the OLS and Allison 5th generation shift selector, you can get a more accurate electronic fluid level check than with a dipstick.

To gain access to the dipstick, open the engine compartment rear door; dipstick is located on the radiator side of the engine (Figure 4).

Clean all dirt from around the end of the oil filler tube before removing the dipstick. Dirt or foreign matter must not be permitted to enter the oil system since it will cause valves to stick, undue wear of transmission parts, and clogged passages. Check the oil level using the procedures in Cold Check and Hot Check. Record any abnormal level on your *"Maintenance Records".*

WARNING

When checking the oil level, be sure that the parking brake and/or emergency brakes are set and properly engaged, and the wheels are chocked. Unexpected and possible sudden vehicle movement may occur if these precautions are not taken.

- Special care must be taken not to touch the engine coolant tubing and/or exhaust pipe, since this could cause severe burns.
- Do not wear loose clothing and, stay away from rotating parts during procedure; personal injury could occur.

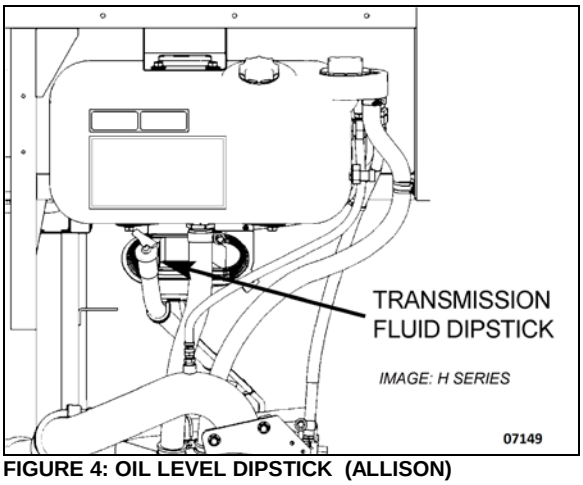

FIGURE 4: OIL LEVEL DIPSTICK (ALLISON)

Always check the oil level reading at least twice when the engine is running. Consistency is important in maintaining the accuracy of the reading. If inconsistent readings persist, check the transmission breather to ensure it is clean and free of debris.

3.1.1 Cold Check

The purpose of the **Cold Check** is to determine if the transmission has enough fluid to be operated safely until a **Hot Check** can be made.

CAUTION

The oil level rises as sump temperature increases. DO NOT fill above the Cold Run band if the transmission oil is below normal operating temperature. During operation, an overfull transmission can become overheated, leading to transmission damage.

1. Move the vehicle to a level surface, put transmission in «N» (Neutral), and set the parking brake.
2. With the engine idling (500 - 800 rpm), shift to «D» (Drive) and then shift to «R» (Reverse) to clear the hydraulic system of air.
3. Run the engine at idle in «N» (Neutral) for about one minute.
4. While the engine is running, remove the dipstick from the tube and wipe it clean (Figure 4). Insert the dipstick into the fill tube, pushing down until it stops.
5. Remove the dipstick and observe the fluid level. Repeat the check procedure to verify the reading. If the fluid on the dipstick is within the COLD CHECK band, the level is satisfactory for operating the transmission until the oil is hot enough to perform a **Hot Check**. If the fluid level **is not** within this band, add or drain fluid as necessary to bring the level within the COLD CHECK band.
6. Perform a **Hot Check** at the first opportunity after the normal operating temperature of 160ºF to 200ºF (71ºC to 93ºC) is attained.

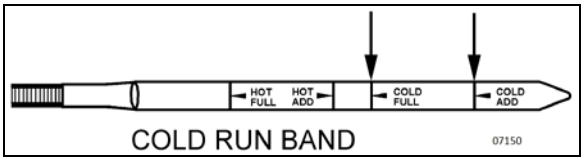

FIGURE 5: COLD CHECK

CAUTION

DO NOT operate the transmission for extended periods of time until a **Hot Check** has verified proper fluid level. Transmission damage can result from extended operation at improper fluid level conditions.

CAUTION

Obtain an accurate fluid level by imposing the following conditions:

- Engine is idling (500-800 rpm) in «N» (Neutral).
- Transmission fluid is at normal operating temperature.
- The vehicle is on a level surface.

3.1.2 Hot Check

To perform a **Hot Check**, do the following:

1. The **Hot Check** can be performed when the transmission oil reaches the normal operating temperature (160ºF to 200ºF / 71ºC to 93ºC). The transmission oil temperature can be checked with the Driver Information Display (DID) when selecting the Gauge menu (refer to the ''Operator's Manual'' for added information).

CAUTION

The oil **must be hot** to obtain an accurate check because the fluid level rises as temperature increases.

2. Park the vehicle on a level surface and shift to «N» (Neutral). Apply the parking brake and allow the engine to idle (500 - 800 rpm).
3. Remove the dipstick from the tube and wipe it clean. Insert the dipstick into the fill tube, pushing down until it stops.
4. Remove the dipstick and observe the fluid level. The safe operating level is anywhere within the HOT RUN band on the dipstick. Repeat the check procedure to verify the reading.
5. If the level **is not** within this band, add or drain fluid as necessary to bring the level within the HOT RUN band.
6. Be sure fluid level checks are consistent. Check level more than once and if readings are not consistent, check to be sure the transmission breather is clean and not clogged. If readings are still not consistent, contact your nearest Allison dealer or distributor.

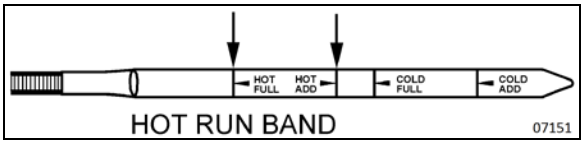

FIGURE 6: HOT CHECK

NOTE
The Cold Check is more appropriate for verifying the oil level after the first fill-up. In case of conflict, the Hot Check has priority over the Cold Check; ***the fluid level check using the pushbutton shift selector has priority over the Hot Check.***

3.2 FLUID LEVEL CHECK USING THE PUSHBUTTON SHIFT SELECTOR

The oil level sensor (OLS) is standard in your transmission. With the OLS and Allison 5th generation shift selector, you can get a more accurate electronic fluid level check than with a dipstick.

Oil level codes are obtained as follows:

1. Park vehicle on a level surface, select «N» (neutral) on the pushbutton shift selector and apply parking brake.
2. Wait for at least 2 minutes to allow the oil to settle;
3. Press simultaneously the ⬆ (Upshift) and ⬇ (Downshift) arrow buttons once.
4. Oil level codes are displayed once the following parameters are met :
   - **The vehicle has been stationary for approximately 2 minutes to allow the oil to settle;**
   - **Engine at idle;**
   - **Oil at normal operating temperature, between 104°F (40°C) and 220°F (104°C);**
   - **Transmission in «N» (Neutral);**
   - **Transmission output shaft stopped;**
   - **Oil level sensor present and working.**
5. Correct fluid level is displayed as shown.

6. Low fluid level is displayed as shown. The number indicates the number of quarts of fluid the transmission requires.

7. High fluid level condition with the number of quarts in excess is displayed as shown.

NOTE
Confirm a low fluid level condition by making a manual fluid level check.

8. To exit the Oil Level Display Mode, press any range button «R», «N» or «D» at any time.

NOTE
Note that the quantities LO 4 and HI 3 are the largest values displayed and that the actual variation in oil level may exceed these numbers.

If the fluid level check cannot be completed, an Invalid for Display fault is reported. Refer to table below to review the codes and conditions.

CODE	CAUSE OF FAULT CODE
SETTLING OK	Settling time too short
ENG RPM TOO LOW	Engine speed (rpm) too low
ENG RPM TOO HIGH	Engine speed (rpm) too high
MUST BE IN NEU	N (Neutral) must be selected
OIL TEMP TOO LOW	Sump fluid temperature too low
OIL TEMP TOO HIGH	Sump fluid temperature too high
VEH SPD TOO HI	Output shaft speed
SENSOR FAILED	Sensor failure

3.3 RECOMMENDED AUTOMATIC TRANSMISSION FLUID

Only use fluids meeting Allison Transmission specification TES295 or TES389 in your

transmission. Refer to TES295 or TES389 Approved Fluids list, found under the Service/Parts heading on the home page of the Allison Transmission web site **www.allisontransmission.com.**

Allison Transmission recommends you take the following into consideration when selecting the appropriate fluid type for your transmission:

- Fluids meeting specification TES295 are preferred over TES389 fluids for use in all 4000 Product Families transmission applications.
- TES295 fluids are fully qualified for Severe Duty and Extended Drain intervals.
- A TES295 fluid allows you to operate at a lower ambient temperature than a TES389 type fluid.
- TES389 fluid is the minimum fluid requirement approved for use in 4000 Product Families transmissions.
- To extend the TES389 fluid drain intervals beyond the recommended mileage or hours change interval, use a fluid analysis program.

When choosing a fluid type to use, consider what the minimum fluid operating temperature of the fluid will be based on the ambient temperatures reached in the geographical location for the vehicle.

Transmission Fluid Operating Temperature Requirements

Fluid type	Minimum operating temperature	
	Celsius	Fahrenheit
TES295	-35	-31
TES389	-25	-13

CAUTION

Disregarding minimum fluid temperature limits can result in transmission malfunction or reduced transmission life.

NOTE

The use of an arctic preheat kit is recommended at temperatures below -25ºF (-32ºC). If a preheat kit is not available, the TCM will restrict full operation until the sump temperature is increased.

3.3.1 Importance of Proper Fluid Level

It is important that the proper fluid level be maintained at all times because the transmission fluid cools, lubricates, and transmits hydraulic power. If the fluid level is too low, the converter and clutches do not receive an adequate supply of fluid. If fluid level is too high, the fluid can aerate, causing the transmission to shift erratically or overheat.

3.3.2 Keeping Fluid Clean

Oil must be handled in clean containers, fillers, etc., to prevent foreign material from entering the transmission. Place the dipstick on a clean surface area while filling the transmission.

CAUTION

Containers or fillers that have been used to handle antifreeze or engine coolant must NEVER be used for handling transmission fluid. Antifreeze and coolant solutions contain ethylene glycol that, if introduced into the transmission, can cause the clutch plates to fail.

3.3.3 Oil Contamination

At each oil change, examine the drained oil for evidence of dirt or water. A nominal amount of condensation will emulsify during operation of the transmission. However, if there is evidence of water; check the cooler (heat exchanger) for other signs of leakage. This, however, may also indicate leakage from the engine oil system.

3.3.4 Metal Particles

Metal particles in the oil (except for minute particles normally trapped in the oil filter) indicate damage has occurred in the transmission. When these particles are found in the sump, the transmission must be disassembled and closely inspected to find the source. Metal contamination will require complete disassembly of the transmission and cleaning of all internal and external circuits, coolers, and all other areas where the particles could lodge.

CAUTION

If excessive metal contamination has occurred, replacement of the oil cooler and replacement of all bearings within the transmission is recommended.

3.3.5 Coolant Leakage

If engine coolant leaks into the transmission oil system, immediate action must be taken to prevent malfunction and possible serious damage. The transmission must be completely disassembled, inspected, and cleaned. All traces of the coolant contamination must be removed. Friction clutch plates contaminated with ethylene glycol must be replaced.

3.4 CONTROL SYSTEM PROGNOSTICS

The transmission control system includes the provision for the user to monitor various transmission operating parameters. Transmission operating parameters monitored by the prognostics feature are:

- Oil Life Monitor
- Filter Life Monitor
- Transmission Health Monitor

NOTE

*The prognostics package requires the use of **TranSynd™ or an Allison approved TES295 or TES389 licensed fluid** in the transmission and **Allison High Capacity filters**. If any other fluids or filters are used, Prognostic mode **must be disabled**. Prognostic information will not be accurate with any other fluids or filters and could result in missed maintenance activities resulting in transmission damage.*

Refer to TES 295 or TES389 Approved Fluids list, found under the Service/Parts heading on the home page of the Allison Transmission web site.

www.allisontransmission.com

When a specified threshold is detected for any of the serviceable conditions, the TRANSMISSION SERVICE indicator is illuminated to alert the operator. Failure to attend to the service condition and reset the TRANSMISSION SERVICE indicator within a defined operating period will result in illumination of the CHECK light with associated message in the DID, indicating the increased probability that the service condition will develop into a more serious condition.

To access the Prognostic Mode functions, simultaneously press the ⬆ (Upshift) and ⬇ (Downshift) arrow buttons repeatedly.

3.4.1 Normal Prognostics Indication at Engine Start

- A system bulb check illuminates the TRANSMISSION SERVICE indicator approximately 0.5 seconds.
- If Prognostics features are enabled, the TRANSMISSION SERVICE indicator illuminates again for 3 seconds after the bulb check. If Prognostics features are disabled, the TRANSMISSION SERVICE indicator does not illuminate again after the bulb check.

3.4.2 Oil Life Monitor

The display message denotes the calculated remaining life of the transmission fluid. This value is based on the established life for the required baseline fluid, and then is continuously adjusted for cumulative effects of such operating parameters as operating time, retarder operation, output shaft revolutions and shift frequency.

Display

The display is a two-digit number, denoting percentage of the fluid life which remains. New fluid is displayed as 99%.

The TRANSMISSION SERVICE indicator will be illuminated, denoting a required change of transmission fluid, when the remaining fluid life reaches approximately 1 %. The indicator will be lit steadily upon each initialization of the TCM, and will remain on steady for approximately 2 minutes after the first selection of “D” (drive) range each time, until service is performed and the indicator is reset.

Failure to perform maintenance and reset the TRANSMISSION SERVICE indicator within a defined period will result in the illumination of the CHECK light with associated message in the DID and diagnostic code P0897 Transmission Fluid Deteriorated.

Reset

The TRANSMISSION SERVICE indicator can be reset by a message over the SAE J1939 communication interface, with the Allison DOC™ for PC diagnostic program, or by depressing and holding the MODE button for ten (10) seconds while the Oil Life Monitor function is displayed. It may also be reset by selecting N-D-N-D-N-R-N on the shift selector, pausing briefly (less than 3 seconds) between each selector movement, with the ignition on and the engine not running. The TRANSMISSION SERVICE indicator illuminates briefly following a reset to acknowledge the reset was successful.

Setting Fluid Type for Prognostics

The fluid type can be programmed if the specific calibration allows it. The operator can do the following:

With the engine off and the ignition on, perform the following sequence on the selector, N-R-N-D-N-R-N-D-N-R-N-D-N.

The TRANSMISSION SERVICE indicator flashes if TES389 is the current setting and illuminates solidly if TES295 is the current setting. To change the transmission fluid type, wait 5 seconds after entering transmission fluid type mode and perform the following sequences to select the proper transmission type:

N-R-N to select TES295

N-D-N to select TES389

The selector exits 30 seconds after entering transmission fluid type mode or the ignition may be turned off to exit earlier. Only one transmission fluid type selection may be made after entering transmission fluid type mode. All other attempt will be ignored. Transmission fluid type mode needs to be entered again if the wrong type of fluid is selected.

CAUTION

Verify prognostics fluid type setting matches transmission fluid type. Oil Life Monitor notifications will be inaccurate when mismatched. This could result in transmission damage from running a TES389 fluid too long or cause shortened TES295 fluid changes to occur.

CAUTION

Required calendar-based oil & filter change intervals (based on month) still apply because Oil Life Monitor function cannot measure time while ignition power is OFF.

If the Oil Life Monitor function has not indicated the need for a fluid change before 60 months have passed when using TES295 fluid type or before 24 months have passed when using TES389 fluid type, it will be necessary to change the fluid and filters per calendar requirements and reset the system.

3.4.3 Filter Life Monitor

This feature provides an alert when the transmission's fluid filters need to be replaced. It helps extend filter change intervals to reduce routine maintenance downtime while providing maximum protection for the transmission.

The filter life indicator pressure switch signals the transmission control module when fluid exiting the main filter drops below a predetermined pressure. Both the main and lube filters **must be** changed when the TRANSMISSION SERVICE indicator shows the main filter should be changed.

Filter Change Notification

The TRANSMISSION SERVICE indicator will flash for 2 minutes after the first selection of "D" (drive) range. Once the Filter Monitor mode has been accessed via the shift selector, the "OIL FILTER OK" or "REPLACE FILTERS" message is displayed in the selector display window. An acceptable filter life status is displayed as "OIL FILTER OK". An unacceptable filter life status is displayed as "REPLACE FILTERS".

Once the programmed threshold for maximum filter pressure drop has been observed and verified, the diagnostic code P088A Transmission Filter Maintenance Alert will be recorded to indicate that the filter has reached the end of its designed life. At the next initialization of the TCM, the TRANSMISSION SERVICE indicator will flash for 2 minutes after the first selection of "D" (drive) range. Thereafter, the indicator will illuminate and flash upon each TCM initialization, continuing to flash for 2 minutes after the first selection of a drive range each time, until service is performed and the indicator is reset.

Failure to perform maintenance and reset the monitor after a calibration-defined number of warnings will result in the illumination of the CHECK light with associated message in the DID and diagnostic code P088B will be recorded to indicate a highly deteriorated filter.

Read and Reset Filter Life Monitor from Selector

To enter the filter life monitor, press simultaneously the ⬆ (Upshift) and ⬇ (Downshift) arrows three times. An acceptable filter life status is displayed as "OIL FILTER OK". An unacceptable filter life status is displayed as "REPLACE FILTERS".

The feature will **reset** automatically when the main fluid filter has been changed and the pressure drop across the filter no longer exceeds the threshold value. A manual reset can be performed by depressing and holding the MODE button for ten (10) seconds while the Filter Life Monitor function is displayed. It may also be reset by selecting N-R-N-R-N-D-N on the shift selector, pausing briefly (less than 3 seconds) between each selector movement, with the ignition on and the engine not running. The TRANSMISSION SERVICE indicator illuminates briefly following a reset to acknowledge the reset was successful.

3.4.4 Transmission Health Monitor

This prognostic feature determines clutch life status of the transmission's clutches and alerts you when clutch maintenance is required. The clutch life status is determined by monitoring changes and the calculated running clearance of the transmission clutches.

Clutch Maintenance Notification

The transmission health monitor feature determines when clutch maintenance is needed. If any of the clutches (except lockup) reaches a remaining life of approximately 10% or if any of the clutch running clearances exceeds a maximum value, then the TRANSMISSION SERVICE indicator is steadily illuminated from just after ignition on until ignition is turned off. Thereafter, the indicator will be lit upon each initialization of the TCM, and will remain on steady during all vehicle operation until service is performed and the indicator is reset. If the transmission health monitor mode has been accessed via the shift selector, a "TRANS HEALTH OK" or "TRANS HEALTH LO" is displayed. An acceptable clutch life status is displayed as "TRANS HEALTH OK". An unacceptable clutch life status is displayed as "TRANS HEALTH LO".

Read and Reset Transmission Health Monitor from Selector

To enter the transmission health monitor, press simultaneously the ⬆ (Upshift) and ⬇ (Downshift) arrows four times. An acceptable clutch life status is displayed as "TRANS HEALTH OK". An unacceptable filter life status is displayed as "TRANS HEALTH LO".

The feature will **reset** automatically upon elimination of the clutch clearance condition which initiated it. The indicator can also be manually reset using the Allison DOC™ for PC diagnostics program if necessary.

The following table illustrates how to access Oil Level Check, Prognostics & Diagnostic Troubleshooting Codes functions on the Allison pushbutton shift selector.

⬆ (Upshift) & ⬇ (Downshift) arrow buttons pressed simultaneously *	Description	Message	
1st press	**Allison transmission oil level check**		
2nd press	**Oil Life Monitor**	**" O "**	**" M "**
	Oil life remaining will range from 99% down to 00%	Some number from 9 to 0	Some number from 9 to 0
3rd press	**Filter Life Monitor**	**" F"**	**" M "**
	Present life of filter is acceptable	OIL FILTER OK	
	Present life of filter is unacceptable	REPLACE FILTERS	
4th press	**Transmission Health Monitor**	**" T"**	**" M "**
	Shows " TRANS HEALTH OK " until remaining life of one or more of the clutch(es) wear enough so that the programming changes	TRANS HEALTH OK	
	One or more of the clutches have worn enough to change the program	TRANS HEALTH LO	
5th press	**Display of diagnostic codes**		

* With the engine off and ignition on.

3.5 OIL AND FILTER CHANGE INTERVAL

TABLE 1

Allison Transmission Recommended Fluid And Filter Change Intervals With Prognostics Mode Disabled Using TES389 or Mixture					
Severe vocation[3] Coaches or MTH equipped with retarder			**General vocation[4] Coaches or MTH without retarder**		
	Filters			**Filters**	
Fluid	**Main & Lube**	**Internal**	**Fluid**	**Main & Lube**	**Internal**
Whichever is the first of the following: 12,000 Miles (20 000 km) 6 Months/ 500hrs *Note: always replace main and lube filters with the fluid change*	Whichever is the first of the following: 12,000 Miles 20 000 km 6 Months/ 500hrs *Note: always replace main and lube filters with the fluid change*	Overhaul	Whichever is the first of the following: 25,000 Miles 40 000 km 12 Months/ 1000hrs *Note: always replace main and lube filters with the fluid change*	Whichever is the first of the following: 25,000 Miles 40 000 km 12 Months/ 1000hrs *Note: always replace main and lube filters with the fluid change*	Overhaul

TABLE 2

Allison Transmission Recommended Fluid And Filter Change Intervals[1] With Prognostics Mode Disabled Using 100% TranSynd or TES295 Approved Fluid[2]					
Severe vocation[3] Coaches or MTH equipped with retarder			**General vocation[4] Coaches or MTH without retarder**		
	Filters			**Filters**	
Fluid	**Main & Lube**	**Internal**	**Fluid**	**Main & Lube**	**Internal**
Whichever is the first of the following: 150,000 Miles (240 000 km) 48 Months/ 6000hrs *Note: always replace main and lube filters with the fluid change*	Whichever is the first of the following: 75,000 Miles 120 000 km 36 Months/ 3000hrs *Note: always replace main and lube filters with the fluid change*	Overhaul	Whichever is the first of the following: 300,000 Miles 480 000 km 48 Months 6000hrs *Note: always replace main and lube filters with the fluid change*	Whichever is the first of the following: 75,000 Miles 120 000 km 36 Months 3000hrs *Note: always replace main and lube filters with the fluid change*	Overhaul

[1] Extended TrandSyndTES295 fluid and filter change intervals are only allowed with Allison High-Capacity filters.

[2] Less than 100% concentration of TranSynd or TES295 approved fluid is considered a mixture and should utilize TES389 change intervals. If the customer replaces non-TranSynd or non-TES295 fluid with TranSynd or TES295 equivalent, the change interval recommendations of TES389 or mixture must be followed. Upon the next oil change, if the customer reinstall TranSynd or TES295 equivalent, the fluid & filter change recommendation outlined in 100% TES295 approved fluids must be followed.

[3] Severe vocation= All retarder, On/Off highway, transit and intercity coach with duty cycle greater than one (1) stop per mile.

[4] General vocation= intercity coach with duty cycle less than or equal to one (1) stop per mile and all other vocations not listed in severe vocation.

TABLE 3

Recommended Fluid And Filter Change Intervals With Prognostics Mode Enabled			
	FLUID CHANGE INTERVALS	HIGH CAPACITY MAIN & LUBE FILTERS CHANGE INTERVALS	SUCTION FILTER ASSEMBLY CHANGE INTERVAL
TES295	Whichever is the first of the following: • If the TRANS SERVICE indicator in the shift selector is illuminated steady for 2 minutes after D (drive) is selected • 60 calendar months *Note: always replace main and lube filters with the fluid change*	Whichever is the first of the following: • If the TRANS SERVICE indicator in the shift selector is illuminated steady for 2 minutes after D (drive) is selected • 60 calendar months • Any time fluid is changed	At time of transmission overhaul
TES389	Whichever is the first of the following: • If the TRANS SERVICE indicator in the shift selector is illuminated steady for 2 minutes after D (drive) is selected • 24 calendar months *Note: always replace main and lube filters with the fluid change*	Whichever is the first of the following: • If the TRANS SERVICE indicator in the shift selector is illuminated steady for 2 minutes after D (drive) is selected • 24 calendar months • Any time fluid is changed	At time of transmission overhaul
Prognostics Mode requires the use an Allison approved TES295 or TES389 transmission fluid and Allison High Capacity filters.			
A mixture of TES295 and TES389 fluid must continue to use the TES389 fluid change intervals, until two fluid changes with only TES295 fluid have occurred, at which time the TES295 schedule may be used.			

3.5.1 Oil and Filter Change Interval with Prognostics Mode Disabled

Allison transmissions are factory fill with **Castrol TranSynd** fluid. Oil change must be performed with the vehicle on a flat and level surface and with parking brake applied. Oil and filter change frequency is determined by the severity of service and operating conditions of the transmission and by the filter equipment installed. See *"TABLE 1 or TABLE 2"* for oil and filter change intervals when PROGNOSTIC MODE is **disabled**. More frequent changes may be required when operations are subject to high levels of contamination or overheating. Filters must be changed at or before recommended intervals.

IMPORTANT NOTE

*Your transmission is equipped with **High Capacity filters**. High Capacity filters allow for increased fluid and filter change intervals in transmissions utilizing TES295 approved fluid or TranSynd. High Capacity filters eliminate the requirement of the initial 5000 miles (8000km) main filter change.*

IMPORTANT NOTE

Allison Transmission recommends that customers use fluid analysis as the primary method for determining fluid change intervals. Many customers have a systematical annual transmission fluid change while, in many cases, fluid analysis could demonstrate that the transmission fluid is still in good condition and a fluid change is not required. In the absence of a fluid analysis program, the fluid change interval listed in TABLE 1 & TABLE 2 should be used.

3.5.2 Oil and Filter Change Interval with Prognostics Mode Enabled

Oil Life Monitor and Filter Life Monitor of the Prognostics mode provide indicators of required maintenance actions. They are designed to maximize fluid and filter utilization. **Prognostics enabled require the use of an Allison approved TES295 or TES389 transmission fluid** and **Allison High Capacity filters**. If any other fluids or filters are used, Prognostic mode

must be disabled. Prognostic information will not be accurate with any other fluids or filters and could result in missed maintenance activities resulting in transmission damage. See *"TABLE 3* for oil and filter change intervals with PROGNOSTIC MODE **enabled**.

IMPORTANT NOTE
A mixture of TES295 and TES389 fluid must continue to use the TES389 fluid change intervals, until two fluid changes with only TES295 fluid have occurred, at which time the TES295 schedule may be used.

Calendar-based change intervals of TABLE 3 must still be adhered to for both fluid and filter changes even if Prognostics has not indicated the need for either fluid or filter maintenance, unless fluid analysis is used.

3.6 FLUID AND FILTER CHANGE PROCEDURE

3.6.1 Drain

1. The transmission should be at an operating temperature of 160ºF (71ºC) to 200ºF (93ºC) when the oil is drained. This will ensure quicker and more complete fluid drainage.
2. Remove the drain plug from under the transmission (Figure 7) and allow the oil to drain into a suitable container. Check the condition of the oil as described previously.
3. Remove twelve bolts (item 1), two filter covers (item 2), two gaskets (item 3), two O-rings (item 4), two O-rings (item 5) and the two filters (item 6) from the bottom of the control module (Figure 7).
4. When reinstalling parts, lubricate and install new O-rings (4) and (5) on each cover (2). Lubricate O-ring inside filter (6) and push filter onto cover (2). Install new gaskets (3) on cover (2) and align holes in gaskets with holes in cover.

⚠ **CAUTION**
Do not use bolts to draw the cover to sump. This can damage the cover, seal, or sump.

5. Install filter and cover assemblies into the filter compartment. Align each filter/cover assembly with the holes in the channel plate/sump. Push the cover assemblies in by hand to seat the seals.
6. Install twelve bolts and both covers.

TORQUE: 38-45 lb-ft (52-61 Nm)

7. Inspect the drain plug and O-ring. Replace if necessary. Reinstall the drain plug.

TORQUE : 18-24 lb-ft (24-33 Nm)

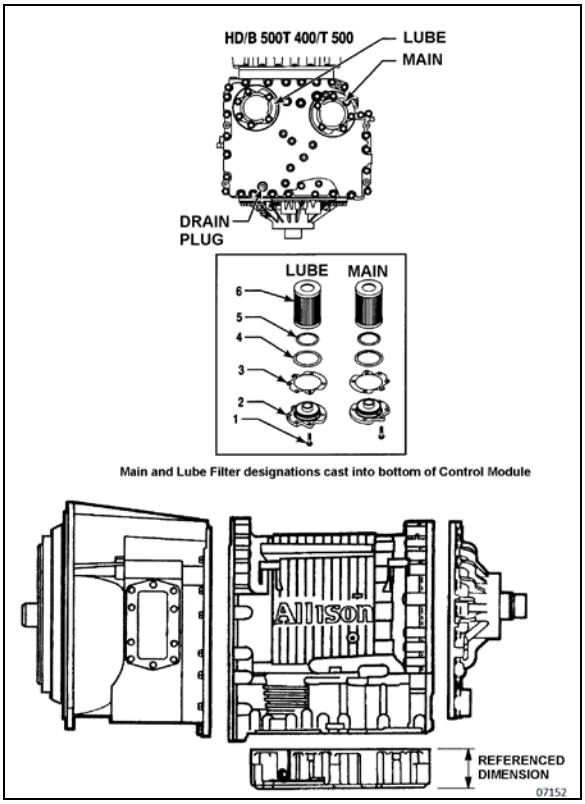

FIGURE 7: DRAIN PLUG AND FILTERS

Fluid loss with filter change only

When changing main and lube filters at recommended intervals, approximate fluid loss for each filter as follows:

Main filter = 2 quarts (1.9 liters)
Lube filter =8 quarts (7.6 liters)

3.6.2 Refill transmission

The amount of refill fluid is less than the amount used for the initial fill. Fluid remains in the external circuits and transmission cavities after draining the transmission.

NOTE
Quantities listed below are approximations and do not include external oil cooler lines.

Using the oil level dipstick filler tube, refill with 24 US qts (23 liters), 28 US qts (26.5 liters) if equipped with retarder, and check the oil level using the **Fluid Level Check Using Pushbutton Shift Selector** procedure in this section. Add transmission fluid according to pushbutton shit selector fluid level check.

3.7 CLEANING AND INSPECTION OF ALLISON AUTOMATIC TRANSMISSION

The exterior of the transmission should be cleaned and inspected at regular intervals. The length of service and severity of operating conditions will determine the frequency of such inspections. Inspect the transmission for:

1. Loosen bolts (transmission and mounting components);
2. Oil leaks (correct immediately);
3. Loose, dirty, or improperly adjusted throttle sensor linkage;
4. Damaged or loose oil lines;
5. Worn or frayed electrical harnesses, improper routing;
6. Worn or out of phase drive line U-joint and slip fittings.

CAUTION

DO NOT pressure wash the transmission electrical connectors. Water and detergent will cause the contacts to corrode or become faulty.

3.7.1 Breather

The breather is located on the engine, flywheel side near the valve cover. It serves to prevent pressure build-up within the transmission and must be cleaned to keep the passage opened. The prevalence of dust and dirt will determine the frequency at which the breather requires cleaning. Use care when cleaning the engine. Spraying steam, water or cleaning solution directly at the breather can force the water or solution into the transmission. Always use care when removing the hose connector from transmission to prevent the entry of foreign matter.

4. ALLISON TRANSMISSION OIL COOLER REMOVAL

4.1 TRANSMISSION WITHOUT RETARDER

Stop engine and allow engine to cool. Close both heater line shutoff valves (refer to Section 05 *"Cooling"*).

To drain the cooling system, proceed as per Section 05 *"Cooling"*, paragraph 5: Draining. If the cooling system is contaminated, flush system as per Section 05 *"Cooling"*, paragraph 7: Flushing.

1. Remove the rear L.H. side tag axle wheel, then remove the rear L.H. side fender panel.
2. Disconnect the two transmission hoses from oil cooler. Cover hose ends and fittings to prevent fluid contamination (Figure 8).

WARNING

A significant amount of oil may drain from oil lines when they are disconnected.

3. Unfasten the constant-torque hose clamps and remove the two hoses.
4. Unscrew the four holding nuts and remove the U-bolts, remove the oil cooler from engine compartment.
5. Reinstall transmission oil cooler by using reverse procedure.

4.2 TRANSMISSION WITH RETARDER

Stop engine and allow engine to cool. Close both heater line shutoff valves (refer to Section 05 *"Cooling"*).

1. To drain the cooling system, proceed as per Section 05 *"Cooling"*, paragraph 5: Draining. If the cooling system is contaminated, flush system as per Section 05 *"Cooling"*, paragraph 7: Flushing.
2. Remove the rear L.H. side tag axle wheel, then remove the rear L.H. side fender panel.
3. Disconnect the transmission hoses from oil cooler. Cover hose ends and fittings to prevent fluid contamination.

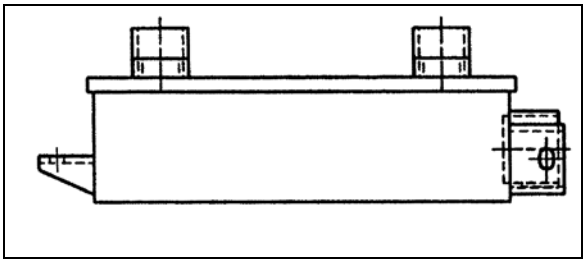

FIGURE 8: COOLER WITH RETARDER (07073)

WARNING

A significant amount of oil may drain from oil lines when they are disconnected.

4. Unfasten the constant-torque hose clamps and remove the two hoses.
5. Unscrew the holding bolts and nuts and remove the oil cooler from engine compartment.

5. ALLISON TRANSMISSION INSTALLATION

1. Place the transmission on a transmission jack.
2. Install a headless guide bolt into one of the 12 threaded holes in the flex plate adapter.

NOTE

For more clearance between the tag axle and transmission, the tag axle may be unloaded and jacked up, or retracted (if applicable).

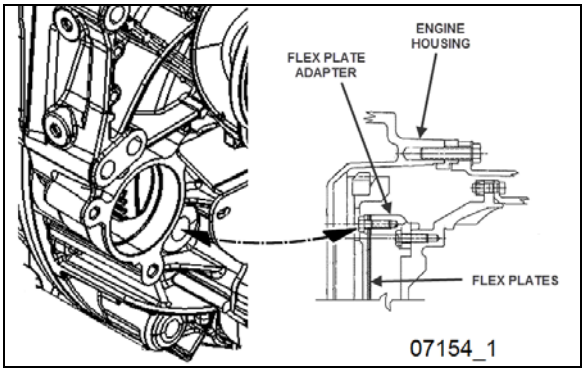

FIGURE 9: TRANSMISSION INSTALLATION

3. With the engine starter removed, use Volvo engine turning tool #88800014 (Figure 10) to align one of the 12 attaching screw holes in the flex plate with the engine starter access opening. If you do not have the Volvo tool, place a wrench on the crankshaft pulley attaching screw to turn it and therefore turn the flex plate.

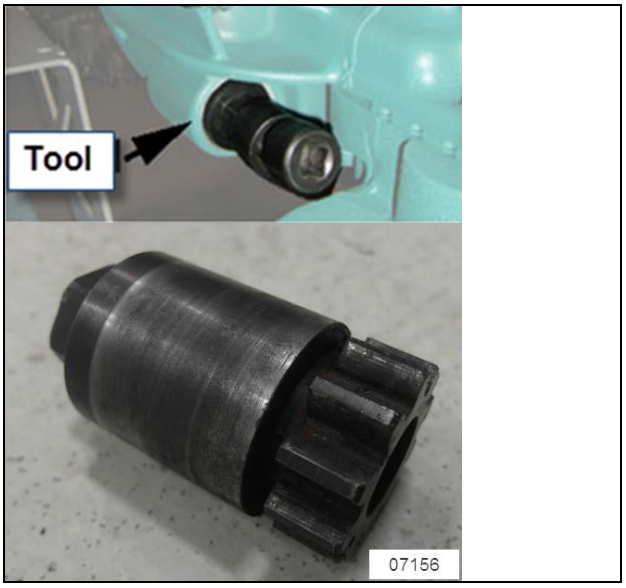

FIGURE 10: VOLVO ENGINE TURNING TOOL #88800014

4. Apply clear silicone (Prevost #680457 or equivalent) on the spacer and install it on the engine housing (Figure 11).

FIGURE 11: SPACER INSTALLATION

5. Lubricate the flywheel center pilot boss with molybdenum disulfide grease (Molycote G, or equivalent).
6. Raise transmission and position the flywheel pilot boss with the crankshaft hole.
7. Turn the flex plate adapter into the transmission to align the headless guide bolt with the flex plate hole facing the engine starter access opening.

WARNING

Severe damages and/or personal injury can occur if transmission is not adequately supported.

8. Apply clear silicone (Prevost #680457 or equivalent) around the edge of the transmission housing (Figure 12: silicone application transmission housing).

FIGURE 12: SILICONE APPLICATION TRANSMISSION HOUSING

9. Seat the transmission against the engine housing (with the spacer in place). NO FORCE IS REQUIRED. If interference is encountered, move the transmission away from engine, then investigate the cause.

CAUTION

The transmission housing must be seated against the engine housing (with the spacer in place) prior to tightening any screws. DO NOT USE SCREWS TO SEAT THE HOUSING.

10. Start all screws attaching the transmission housing to the engine housing.
11. Tighten them gradually in a criss-cross sequence as shown in Figure 13. Apply the following torque value:

TORQUE: 46-50 lb-ft (62-68 Nm)

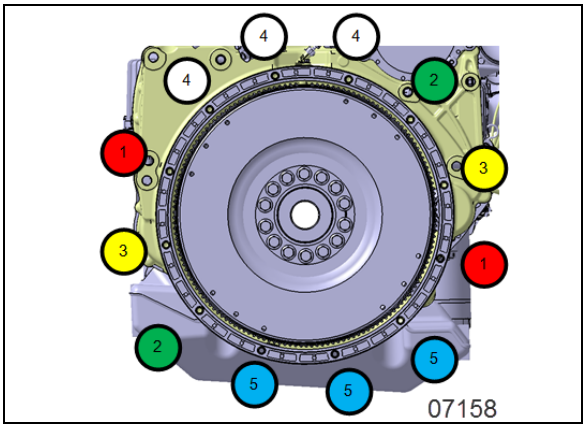

FIGURE 13: CRISS CROSS PATTERN

12. Remove the headless guide bolt from the flex plate adapter through the engine starter access opening. Replace it with a self-locking screw, finger-tighten then start the remaining screws. Use Volvo engine turning tool #88800014 (Figure 10) to align holes. If you do not have the Volvo tool, place a wrench on the crankshaft pulley attaching screw to turn it and therefore turn the flex plate.
13. Tighten all screws to the following torque value:

TORQUE: 24-30 lb-ft (33-41 Nm)

NOTE

Reinstall engine starter and connect cables.

Reinstall access plug below starter motor.

14. Remove jack from under transmission.
15. Connect all sensors.
16. Connect the main wiring harness.
17. Connect the air supply line (steel-braided hose) to the retarder control valve (if applicable).
18. Connect the two transmission oil cooler hoses as they were previously.
19. Reinstall clamps and brackets, and replace locking ties previously removed during removal procedure.
20. Install propeller shaft and its safety guard. Refer to Section 09, *"PROPELLER SHAFT".*
21. Install transmission dipstick and filler tube.
22. Install cross member under transmission.
23. Install engine splash guards.
24. Adjust the retarder pressure to 80 ± 3 psi with the air pressure regulator. For more information refer to Section 12, *"BRAKE AND AIR SYSTEM"*, under heading *"AIR PRESSURE REGULATOR".* The air pressure regulator is located at back of engine compartment, on R.H. side (Figure 14) or in the R.H. side rear service compartment.
25. Make sure that the drain plug is in place, and then remove the transmission dipstick and pour approximately 24 US quarts (23 L) of automatic transmission fluid through the filler tube. Check and adjust oil level.

CAUTION

Do not overfill the transmission. Overfilling can cause oil aeration (milky appearance) and overheating. If overfilling occurs, drain oil as required to bring it to the proper level.

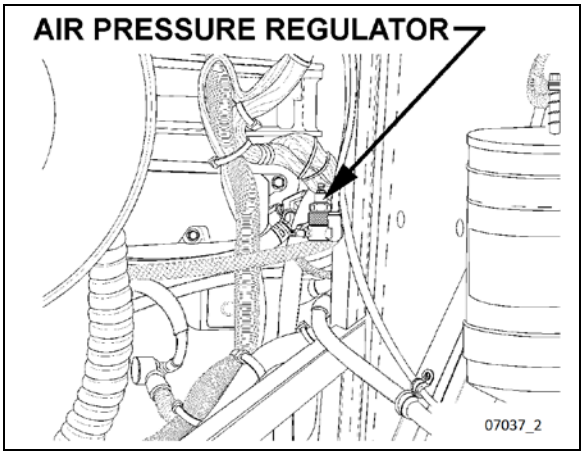

FIGURE 14: AIR PRESSURE REGULATOR (TYPICAL)

6. ALLISON TRANSMISSION TROUBLESHOOTING

The Allison transmission has a new Transmission Control Module (TCM) which involves specific diagnostic incident codes. The TCM unit is located in the coach main power compartment.

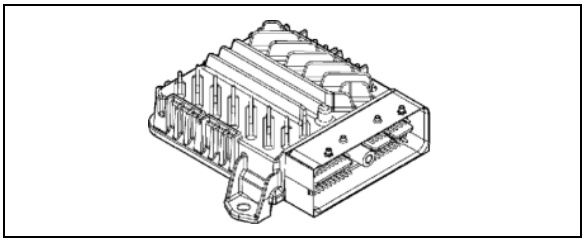

FIGURE 15: TRANSMISSION CONTROL MODULE (07140)

TCM Replacement

The TCM is a non-serviceable electronic device. When it fails, it must be replaced using the following procedure:

- Open the coach main power compartment in order to get access to the TCM;
- Remove the electrical cable connectors;
- Unscrew the TCM unit;
- Replace by reversing the procedure.

CAUTION

Place the battery master switch to the ‘‘OFF’’ position.

6.1 DIAGNOSTIC TROUBLESHOOTING CODES (DTC) — ALLISON 5TH GENERATION CONTROLS

Diagnostic features are provided with the transmission control system to assist in troubleshooting of malfunctions and/or the monitoring of specific operating parameters. When a control system malfunction is detected, a series of Diagnostic Trouble Codes (DTCs) are used to identify and clarify the nature of the malfunction. These DTCs are each named by a 5 character alphanumeric string that refers to a diagnostic algorithm running pass/fail tests to help identify a malfunction in the transmission or vehicle operation. Most DTCs have some kind of diagnostic response that the operator notices, such as an illuminated CHECK light, selector display change, lock in range, or inhibit shifts condition.

DTCs are logged in the Transmission Control Module (TCM) memory by severity and by their active/inactive status with the most severe and active codes listed first. A maximum of five DTCs (numbered d1- d5) from most recent to oldest may be read from the shift selector. As DTCs are added, the oldest inactive DTC (historic) is dropped from the list. If all DTCs are active, the DTC with the lowest priority is dropped from the list.

An active code is any code that is current in the TCM decision-making process and has failed the DTC test(s) associated with that specific diagnostic algorithm. Historical codes, which are by definition inactive, are codes that are no longer failing their algorithm but are retained in the TCM in order to help the technician analyze possible causes and provide them direction if the vehicle is brought in before they are cleared from the queue.

DTCs can be cleared manually by the operator or they clear automatically from last (d5) to first (d1) in the queue after a number of engine starts, without becoming active again.

6.1.1 Using Shift Selector for Accessing Diagnostics Information

DTCs can be displayed on the display portion of the shift selector. A DTC is either active or

historic. An active DTC is a DTC that is current in the TCM decision-making process. Historic DTCs are retained in the TCM memory and do not necessarily affect the TCM decision-making process.

6.1.2 Display Sequence

Up to five DTCs may be displayed one at a time from the selector once the diagnostic display mode has been initiated by the operator. Each DTC is 5 characters in length. The DTC status active or inactive is shown below the DTC.

Shows active DTC P0730

The operator presses the MODE button to read the next OTC in the queue (if any) or requests to exit diagnostics mode. The diagnostics mode times out and returns the selector to normal operating mode after approximately 10 minutes of operator inactivity.

6.1.3 Diagnostic Code Display and Clearing Procedure

Diagnostic codes can be read and cleared by two methods:

- Using an Allison DOC™ diagnostic tool. For specific instructions on how to use an Allison DOC™ diagnostic tool, refer to the User Guide.
- Using the pushbutton shift selector.

To begin the diagnostic process:

1. Bring the vehicle to a stop at a safe location.
2. Apply the parking brake.

To display stored codes:

1. Simultaneously press the ⬆ (Upshift) and ⬇ (Downshift) arrow buttons <u>five times</u> (Prognostics enabled) to access the Diagnostic Display Mode. With Prognostics disabled, press the ⬆ (Upshift) and ⬇ (Downshift) arrow buttons <u>twice</u>.
2. Press the MODE button to read the next code in the queue, if any.

To clear all active stored codes:

While in Diagnostic Mode, clear <u>all active codes</u> by pressing and holding the MODE button for approximately three seconds until the MODE message flashes. Release the MODE button. The MODE message should not remain illuminated if the active DTC shown in the display has cleared.

While in Diagnostic Mode, press and hold the MODE button for 10 seconds to clear both <u>active codes and inactive codes</u>. The MODE message flashes a second time indicating all codes are cleared from the queue.

6.1.4 Exiting Diagnostic Mode

Exit the diagnostic mode by one of the following methods:

1. Press simultaneously the ⬆ (Upshift) and ⬇ (Downshift) arrow buttons at the same time on the pushbutton shift selector.
2. Press any range button «D», «N» or «R» on the pushbutton shift selector.
3. After approximately 10 minutes of inactivity at the pushbutton shift selector, the diagnostic mode automatically exits and returns to normal operating mode.
4. Turn off power to the TCM (shut off the engine using the ignition key).

NOTE
Be sure to record all codes displayed before they are cleared. This is essential for troubleshooting.

NOTE
If clearing a code while locked in a «D» (Drive) or «R» (Reverse) position (fail-to-range), the transmission will still be in «D» (Drive) or «R» (Reverse) when the clearing procedure is completed. «N» (Neutral) must be manually selected.

6.1.5 Diagnostic Trouble Code Response

The electronic control system is programmed to inform the operator of a problem with the transmission system via the CHECK light and shift selector display while it automatically takes action to protect the operator, vehicle, and transmission. When the Transmission Control Module (TCM) flags a Diagnostic Trouble Code (DTC) as active, the TCM may take a combination of diagnostic responses as listed in the following table.

CATEGORY OF RESPONSE	ACTIONS TAKEN
DNS - Do Not Shift	Release lock up (LU) clutch and inhibit lock up operation. Inhibit shifts from the current attained range. Turn on the CHECK light. Display the current attained range in the MONITOR window of the shift selector. Blank the SELECT window of the shift selector. Ignore any range selection inputs from the shift selector.
SOL OFF - SOLenoid OFF	All solenoids are commanded off, resulting in hydraulic default operation of the transmission – PCS1 & PCS2 are on hydraulically when off electrically.
RPR - Return to Previous Range	When the speed sensor ratio or PS1 tests do not pass, the TCM commands the same range as commanded before the shift.
NNC - Neutral No Clutches	When certain speed sensor ratio or PS1 tests do not pass, the TCM a neutral condition with no clutches applied.
DNA - Do Not Adapt	The TCM stops adaptive shift control while the code is active.

6.2 DIAGNOSTIC TROUBLESHOOTING CODES (DTC) LIST - ALLISON 5TH GENERATION CONTROLS

DTC	Description	CHECK Light	Inhibited Operation Description
C1312	Retarder Request Sensor Failed Low	No	May inhibit retarder operation if not using J1939 datalink
C1313	Retarder Request Sensor Failed High	No	May inhibit retarder operation if not using J1939 datalink
P0122	Pedal Position Sensor Circuit Low Voltage	No	Use default throttle values. Freezes shift adapts.
P0123	Pedal Position Sensor Circuit High Voltage	No	Use default throttle values. Freezes shift adapts.
P0218	Transmission Fluid Over Temperature	Yes	Use default sump temp
P0562	System Voltage Low	No	Inhibit TCC Operation, DNA
P0602	TCM Not Programmed	Yes	Lock in Neutral
P0604	Control module random access memory (RAM)	Yes	Lock in Neutral
P0614	Torque Control Data Mismatch - ECM/TCM	Yes	Allows operation only in reverse and second range.
P0634	TCM Internal Temperature Too High	Yes	SOL OFF (hydraulic default)
P0642	Sensor Reference Voltage "A" Circuit Low	Yes	Default sensor data used
P0643	Sensor Reference Voltage "A" Circuit High	Yes	Default sensor data used
P0657	Actuator Supply Circuit Voltage 1 Open (HSD 1)	Yes	SOL OFF, DNA, Inhibit TCC operation, Inhibit main modulation
P0658	Actuator Supply Voltage 1 (HSD1) Low	Yes	DNS, SOL OFF (hydraulic default)
P0659	Actuator Supply Voltage 1 (HSD1) High	Yes	DNS, SOL OFF (hydraulic default)
P0703	Brake Switch Circuit Malfunction	No	No Neutral to Drive shifts for refuse packer. TCM inhibits retarder operation if a TPS code is also active.
P0708	Transmission Range Sensor Circuit High Input	Yes	Ignore defective strip selector inputs
P070C	Transmission Fluid Level Sensor Circuit – Low Input	No	None

DTC	Description	CHECK Light	Inhibited Operation Description
P070D	Transmission Fluid Level Sensor Circuit – High Input	No	None
P0712	Transmission Fluid Temperature Sensor Circuit Low Input	Yes	Use default sump temp
P0713	Transmission Fluid Temperature Sensor Circuit High Input	Yes	Use default sump temp
P0715	Turbine Shaft Speed Sensor Circuit	Yes	DNS, Lock in current range
P0716	Turbine Shaft Speed Sensor Circuit Performance	Yes	DNS, Lock in current range
P0717	Turbine Shaft Speed Sensor Circuit No Signal	Yes	DNS, Lock in current range
P071A	RELS Input Failed On	Yes	Inhibit RELS operation
P071D	General Purpose Input Fault	Yes	None
P0720	Output Shaft Speed Sensor Circuit	Yes	DNS, Lock in current range
P0721	Output Shaft Speed Sensor Circuit Performance	Yes	DNS, Lock in current range
P0722	Output Speed Sensor Circuit No Signal	Yes	DNS, Lock in current range
P0725	Engine Speed Sensor Circuit	No	Default to turbine speed
P0726	Engine Speed Sensor Circuit Performance	No	Default to turbine speed
P0727	Engine Speed Sensor Circuit No Signal	No	Default to turbine speed
P0729	Incorrect 6th Gear Ratio	Yes	DNS, Attempt 5th, then 3rd
P0731	Incorrect 1st Gear ratio	Yes	DNS, Attempt 2nd, then 5th
P0732	Incorrect 2nd Gear ratio	Yes	DNS, Attempt 3rd, then 5th
P0733	Incorrect 3rd Gear ratio	Yes	DNS, Attempt 4th, then 6th
P0734	Incorrect 4th Gear ratio	Yes	DNS, Attempt 5th, then 3rd
P0735	Incorrect 5th Gear ratio	Yes	DNS, Attempt 6th, then 3rd, then 2nd
P0736	Incorrect Reverse Gear ratio	Yes	DNS, Lock in Neutral
P0741	Torque Converter Clutch System Stuck Off	Yes	None
P0752	Shift Solenoid 1 Valve Performance-Stuck On	Yes	DNS
P0776	Pressure Control Solenoid (PCS) 2 Stuck Off	Yes	DNS, RPR
P0777	Pressure Control Solenoid 2 Stuck On	Yes	DNS, RPR
P0796	Pressure Control Solenoid 3 Stuck Off	Yes	DNS, RPR
P0797	Pressure Control Solenoid 3 Stuck On	Yes	DNS, RPR
P0842	Transmission Fluid Pressure Switch 1 Circuit Low	Yes	DNS, Lock in current range
P0843	Transmission Fluid Pressure Switch 1 Circuit High	Yes	DNS, Lock in current range
P0847	Transmission Fluid Pressure Switch 2 Circuit Low	Yes	None
P0848	Transmission Fluid Pressure Switch 2 Circuit High	Yes	None
P088A	Transmission Fluid Filter Maintenance Alert	No	None
P088B	Transmission Fluid Filter Maintenance Required	No	None
P0880	TCM Power Input Signal	No	None
P0881	TCM Power Input Signal Performance	No	None
P0882	TCM Power Input Signal Low	Yes	DNS, SOL OFF (hydraulic default)
P0883	TCM Power Input Signal High	No	None
P0894	Unexpected Mechanical Gear Disengagement	Yes	DNS, Lock in first
P0897	Transmission Fluid Deteriorated	No	None
P0960	Main Pressure Modulator Solenoid Control Circuit Open	Yes	None
P0962	Main Pressure Modulator Solenoid Control Circuit Low	Yes	DNS, SOL OFF (hydraulic default)
P0963	Main Pressure Modulator Solenoid Control Circuit High	Yes	None
P0964	Pressure Control Solenoid 2 (PCS2) Control Circuit Open	Yes	DNS, SOL OFF (hydraulic default)
P0966	Pressure Control Solenoid 2 (PCS2) Control Circuit Low	Yes	DNS, SOL OFF (hydraulic default)
P0967	Pressure Control Solenoid 2 (PCS2) Control Circuit High	Yes	DNS, SOL OFF (hydraulic default)
P0968	Pressure Control Solenoid 3 (PCS3) Control Circuit Open	Yes	DNS, SOL OFF (hydraulic default)
P0970	Pressure Control Solenoid 3 (PCS3) Control Circuit Low	Yes	DNS, SOL OFF (hydraulic default)
P0971	Pressure Control Solenoid 3 (PCS3) Control Circuit High	Yes	DNS, SOL OFF (hydraulic default)
P0973	Shift Solenoid 1 (SS1) Control Circuit Low	Yes	DNS, SOL OFF (hydraulic default)
P0974	Shift Solenoid 1 (SS1) Control Circuit High	Yes	DNS, SOL OFF (hydraulic default)
P0976	Shift Solenoid 2 (SS2) Control Circuit Low	Yes	7-speed: Allow 2 through 6, N, R Inhibit TCC operation
P0977	Shift Solenoid 2 (SS2) Control Circuit High	Yes	7-speed: Allow 2 through 6, N, R
P097A	Shift Solenoid 1 (SS1) Control Circuit Open	Yes	Lock in range
P097B	Shift Solenoid 2 (SS2) Control Circuit Open	Yes	7-speed: Allow 2 through 6, N, R
P0989	Retarder Pressure Sensor Circuit Low	No	None

DTC	Description	CHECK Light	Inhibited Operation Description
P0990	Retarder Pressure Sensor Circuit High	No	None
P1739	Incorrect Low Gear Ratio	Yes	Command 2nd and allow shifts 2 through 6, N, R
P1790	Gear Shift Module 1 Calibrated Invalid	Yes	Shift selector language or units incorrect
P1791	Gear Shift Module 2 Calibrated Invalid	Yes	Shift selector language or units incorrect
P1891	Throttle Position Sensor PWM Signal Low	No	Use default throttle values
P1892	Throttle Position Sensor PWM Signal High	No	Use default throttle values
P2184	Engine Coolant Temperature Sensor 2 Circuit Low Input	No	Use default engine coolant values
P2185	Engine Coolant Temperature Sensor 2 Circuit High Input	No	Use default engine coolant values
P2637	Torque Management Feedback Signal (A)	Yes	Inhibit SEM
P2641	Torque Management Feedback Signal (B)	Yes	Inhibit LRTP
P2669	Actuator Supply Circuit Voltage 2 Open (HSD2)	Yes	SOL OFF, Inhibit TCC operation, Inhibit Main modulation, ONA
P2670	Actuator Supply Voltage 2 (HSD2) Low	Yes	DNS, SOL OFF (hydraulic default)
P2671	Actuator Supply Voltage 2 (HSD2) High	Yes	DNS, SOL OFF (hydraulic default)
P2684	Actuator Supply Circuit Voltage 3 Open (HSD3)	Yes	SOL OFF, Inhibit TCC operation, Inhibit Main modulation, ONA
P2685	Actuator Supply Voltage 3 (HSD3) Low	Yes	DNS, SOL OFF (hydraulic default)
P2686	Actuator Supply Voltage 3 (HSD3) High	Yes	DNS, SOL OFF (hydraulic default)
P2714	Pressure Control Solenoid 4 (PCS4) Stuck Off	Yes	DNS, RPR
P2715	Pressure Control Solenoid 4 (PCS4) Stuck On	Yes	DNS, SOL OFF (hydraulic default)
P2718	Pressure Control Solenoid 4 (PCS4) Control Circuit Open	Yes	DNS, SOL OFF (hydraulic default)
P2720	Pressure Control Solenoid 4 (PCS4) Control Circuit Low	Yes	DNS, SOL OFF (hydraulic default)
P2721	Pressure Control Solenoid 4 (PCS4) Control Circuit High	Yes	DNS, SOL OFF (hydraulic default)
P2723	Pressure Control Solenoid 1 (PCS1) Stuck Off	Yes	DNS, RPR
P2724	Pressure Control Solenoid 1 (PCS1) Stuck On	Yes	DNS, RPR
P2727	Pressure Control Solenoid 1 (PCS1) Control Circuit Open	Yes	DNS, SOL OFF (hydraulic default)
P2729	Pressure Control Solenoid 1 (PCS1) Control Circuit Low	Yes	DNS, SOL OFF (hydraulic default)
P2730	Pressure Control Solenoid 1 (PCS1) Control Circuit High	Yes	DNS, SOL OFF (hydraulic default)
P2736	Pressure Control Solenoid 5 (PCS5) Control Circuit Open	Yes	Inhibit retarder operation
P2738	Pressure Control Solenoid 5 (PCS5) Control Circuit Low	Yes	Allow 2 through 6, N, R. Inhibit retarder and TCC operation
P2739	Pressure Control Solenoid 5 (PCS5) Control Circuit High	Yes	Inhibit retarder operation
P273F	Retarder Oil Temperature Sensor Over Temperature Condition	No	None
P2742	Retarder Oil Temperature Sensor Circuit – Low	No	Use default retarder temp values
P2743	Retarder Oil Temperature Sensor Circuit – High	No	Use default retarder temp values
P2761	TCC PCS Control Circuit Open	Yes	Inhibit TCC operation
P2763	TCC PCS Control Circuit High	Yes	Inhibit TCC operation
P2764	TCC PCS Control Circuit Low	Yes	7-speed: Allow 2 through 6, N, R. Inhibit TCC operation
P2789	Transmission Clutch Life Expired (Clutch Adaptive Learning at Limit)	No	None
P2793	Gear Shift Direction Circuit	Yes	Ignores PWM input from shift selector
P2808	Pressure Control Solenoid 6 (PCS6) Stuck Off	Yes	DNS, RPR
P2809	Pressure Control Solenoid 6 (PCS6) Stuck On	Yes	DNS, RPR
P2812	Pressure Control Solenoid 6 (PCS6) Control Circuit Open	Yes	DNS, SOL OFF (hydraulic default)
P2814	Pressure Control Solenoid 6 (PCS6) Control Circuit Low	Yes	DNS, SOL OFF (hydraulic default)
P2815	Pressure Control Solenoid 6 (PCS6) Control Circuit High	Yes	DNS, SOL OFF (hydraulic default)
U0073	CAN Communication Bus 1 Off	No	Use default values
U0074	CAN Communication Bus 2 Off	No	Use default values
U0100	Lost Communications with ECM A	Yes	Use default values
U0103	Lost Communication with Gear Shift Module (Shift Selector) 1	Yes	Maintain range selected, observe gear shift direction circuit

DTC	Description	CHECK Light	Inhibited Operation Description
U0291	Lost Communication with Gear Shift Module (Shift Selector) 2	Yes	Maintain range selected, observe gear shift direction circuit
U0304	Incompatible Gear Shift Module 1 (Shift Selector)	Yes	Ignore shift selector inputs
U0333	Incompatible Gear Shift Module 2 (Shift Selector)	Yes	Ignore shift selector inputs
U0404	Invalid Data Received From Gear Shift Module (Shift Selector) 1	Yes	Maintain range selected, observe gear shift direction circuit
U0592	Invalid Data Received From Gear Shift Module (Shift Selector) 2	Yes	Maintain range selected, observe gear shift direction circuit

7. ALLISON TRANSMISSION REMOVAL

The following procedure deals with the removal of the Allison transmission without removing the power plant cradle from vehicle. The methods used to support the transmission and engine depend upon conditions and available equipment.

1. Select transmission's "NEUTRAL" positions, apply parking brake, and then set battery master switch to the "OFF" position.
2. Jack up vehicle, then place safety supports underneath body.

CAUTION

Only the recommended jacking points must be used as outlined in Section 18, "BODY".

NOTE

For more clearance between the tag axle and transmission, the tag axle may be unloaded and jacked up or retracted (if applicable).

3. Remove engine splash guards and protective panels surrounding transmission.
4. Remove cross member from under transmission.
5. Remove the transmission drain plug and allow oil to drain. Inspect the drain plug washer and replace it if necessary. Reinstall the drain plug (see *"3.5 Oil and Filter Change"* in this section.

TORQUE: 18-24 lb-ft (24-33 Nm)

WARNING

It is better to drain oil when it is still warm. Avoid contact with oil since it can be very hot and cause personal injury.

6. Remove transmission dipstick and filler tube.
7. Disconnect propeller shaft from transmission and remove its safety guard. Refer to Section 09, *"PROPELLER SHAFT".*
8. Disconnect the two oil cooler hoses from transmission. Cover hose ends and fittings to prevent fluid contamination.

WARNING

A significant amount of oil may drain from oil lines when they are disconnected.

9. Disconnect all sensors on L.H. side of the transmission.
10. Disconnect main wiring harness.
11. Disconnect the air supply line (steel-braided hose) from retarder control valve (if applicable).
12. Remove any locking tie, clamp and bracket that may interfere with the removal of transmission.
13. Support transmission using a suitable transmission jack.

NOTE

Remove starter motor located on engine L.H. side. Removing the starter motor will allow access to unfasten the 12 converter-to-flexible plate attaching screws. Remove the plug located below starter motor and install cranking tool (88800014). Cranking the engine to gain access to the attaching screws may be done by turning the cranking tool using a suitable adapter (Figure 16).

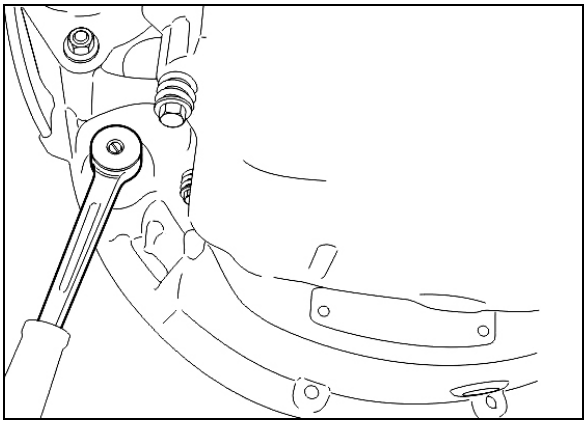

FIGURE 16: VOLVO ENGINE CRANKING POSITION

CAUTION

Do not rotate alternator shaft clockwise to avoid removing tension on belt.

14. Remove the 12 screws retaining the torque converter housing to the flywheel housing.

CAUTION

Make sure transmission-to-engine alignment is maintained when removing screws to avoid damaging torque converter housing.

15. Slowly pull transmission straight out to clear the engine.
16. Remove the transmission.

8. VOLVO I-SHIFT TRANSMISSION MAINTENANCE

8.1 TRANSMISSION OIL TYPE

Keep the transmission oil at the proper level and change it at the Volvo recommended intervals. Always replace the oil filter when the oil is changed. Always use the Volvo approved synthetic oil whenever adding or changing the transmission oil.

Consult "**2.2 FLUIDS AND LUBRICANTS SPECIFICATION**" in SECTION 24 for appropriate I-Shift transmission oils or refer to **Approved oils Engine and I-Shift Transmission** PDF document found on your Technical Publications USB flash drive.

CAUTION

Never reuse drained I-Shift oil. The oil must be replaced along with the oil filter. Reusing drained oil can result in damage to transmission components.

8.2 CHECKING OIL LEVEL

Check the transmission oil level at each service interval. Park the vehicle on a level surface. Check the oil level through the sight glass on the side of the transmission. Add oil as necessary. Always use the correct Volvo approved synthetic oil.

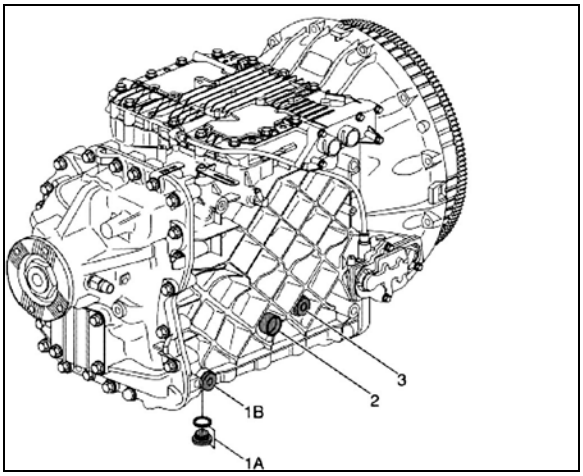

FIGURE 17: I-SHIFT TRANSMISSION OIL CHANGE

- Vehicle should be on horizontal ground when oil is changed;
- Do not check oil level straight after a journey (incorrect measurement). Undertake the check once the transmission oil has cooled down (lower than 104°F or 40 °C);
- Check oil level using transmission sight glass (2) ;

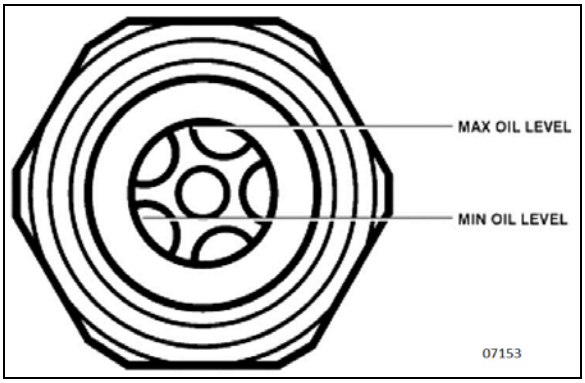

FIGURE 18: SIGHT GLASS FOR CHECKING OIL LEVEL

- Add oil through the oil filling point if necessary (3) ;
- Torque tighten fill plug.

TORQUE: 22-30 lb-ft (30-41 Nm)

8.3 OIL DRAINS INTERVAL

The length of time a transmission can operate before an oil change is required depends on the quality of the oil used and the vehicle application.

MAINTENANCE

Always use Volvo approved synthetic oil whenever changing the transmission oil. Always replace the oil filter when the oil is changed.

Refer to “2.2 FLUIDS AND LUBRICANTS SPECIFICATION” in SECTION 24 for appropriate I-Shift transmission oils.

Extended Drains

For normal and heavy operating condition, change the transmission oil and filter at the intervals specified by the Lubrication And Servicing Schedule in Section 24: LUBRICATION & SERVICING. This extended oil change interval requires using approved oil for extended drains.

Regular Drains

When not using approved oil for extended drains, change the transmission oil and filter at the intervals specified by the Lubrication And Servicing Schedule in Section 24: LUBRICATION & SERVICING.

8.4 OIL CHANGE

Approximately 15 liters (16 quarts) is needed for a complete oil change.

WARNING

Hot oil can cause burns. DO NOT allow hot oil to contact the skin. When changing oil, wear protective gloves.

Remove the drain plug from under the transmission (1A or 1B, Figure 17) and allow the oil to drain into a suitable container.

Inspect the drain plug and O-ring. Replace if necessary. Reinstall the drain plug.

TORQUE: 18-24 lb-ft (24-33 Nm)

CAUTION

Always dispose of all lubricants (engine oil, coolant, transmission oil, etc) and filters according to Federal or local regulations.

Change the oil filter (#20779040) at every oil change. Drain the oil filter housing before you remove the filter. Torque tighten oil filter housing drain plug.

TORQUE: 11-13 lb-ft (15-18 Nm)

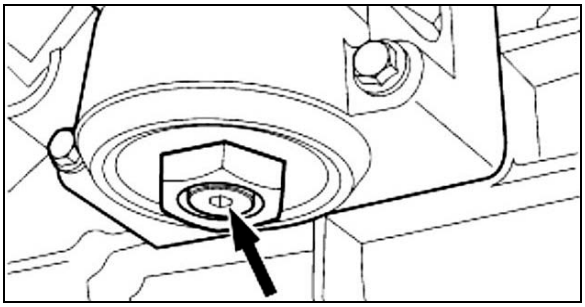

FIGURE 19: OIL FILTER HOUSING DRAIN PLUG

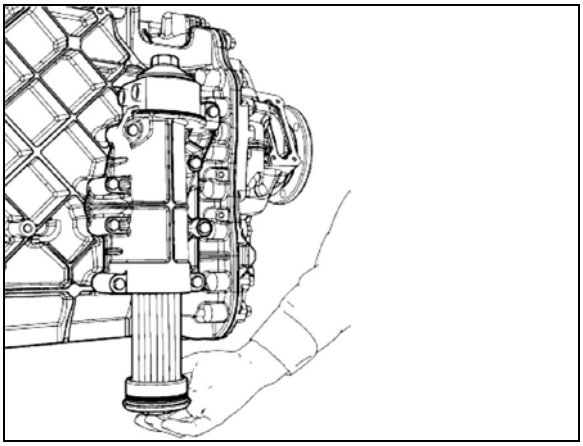

FIGURE 20: OIL FILTER

9. VOLVO I-SHIFT TRANSMISSION TECU FAULT CODES

FUNCTION	PID/SID	FMI J1587	ERROR	CONDITION	SYMPTOM	COMMENT
Brake switch	**PID65**	FMI14	Brake interlock active	***Activate:*** The gearlever is moved from neutral without prior application of the service brake ***Deactivate:*** The gearlever is returned to neutral or the vehicle speed is above 5km/h	White lamp is sent together with a pop-up message The transmission will not engage the selected gear (stays in neutral)	***Conditions for activation: (and)*** The brake interlock function is activated (VTNA vehicles only) The vehicle speed is below 5km/h The gear lever is moved from neutral or in folded position without prior activation of the service brake or parking brake ***Conditions for deactivation: (either)*** The vehicle speed is above 5km/h The gearlever is returned to neutral or folded position
Calibration memory	**SID253**	FMI13	Out of range	***Active:*** Flash CS dataset error or program code missing ***Deactivate:*** Flash CS OK	Yellow lamp is sent Cranking is inhibited Engine cannot start	
Clutch cylinder slip point position	**PPID51**	FMI13	Calibration value out of range	***Activate:*** 1. The CS in NVRAM is not correct, or 2. The slip point has not been calibrated ***Deactivate:*** Slip point has been successfully calibrated	Yellow lamp is sent The vehicle cannot drive	
Clutch load on plates	**PID50**	FMI0	Data valid but above normal operational range	***Activate:*** The calculated stored energy is above 200kJ. The energy calculation is time-based for VTNA and physical for others. ***Deactivate:*** 7.0s after activation and, energy below 180 kJ or neutral, or driving without clutch slip	Yellow lamp is sent Start gear changed to gear 1 in A/D, for RTC also in M The clutch is overheated The clutch is slowly engaged	Clutch load on plates are set without any filtering
Clutch load on plates		FMI11	Clutch protection active (unidentifiable error)	***Activate:*** Only activated for VTNA. Clutch slip more than 8.0s with vehicle movement less than 0.8m (e.g. hill holding event)	Yellow lamp is sent Start gear changed to gear 1 in A/D, for RTC also in M There has been unnecessary clutch slip	

FUNCTION	PID/SID	FMI J1587	ERROR	CONDITION	SYMPTOM	COMMENT
				Deactivate: 7.0s after activation and, acc pedal released more than 6.0s or neutral, or driving without clutch slip	The clutch is slowly engaged	
Clutch load on plates		FMI14	Special instructions	***Activate:*** If there is an attempt to start on a high range gear or above gear 4 in VTNA in manual mode ***Deactivate:*** The start gear is changed to an allowed gear	White lamp is sent Not possible to start	This fault code is not saved
Clutch plate wear condition	**PID36**	FMI0	Data valid but above normal operational range	***Activate:*** The clutch wear is more than or equal to "Service due position" ***Deactivate:*** The clutch disc is replaced and calibrated	Yellow lamp is sent If active during a long time the clutch may wear out and become damaged	
Clutch position sensor supply (SEPoC5V)	**PPID54**	FMI0	Data valid but above normal operational range	***Activate:*** Voltage is above normal range ***Deactivate:*** Voltage is within normal range	Yellow lamp is sent Reduced clutch performance Reduced gearbox comfort at start and marshalling Gear changes are slow	
Clutch position sensor supply (SEPoC5V)		FMI1	Data valid but below operational range	***Activate:*** Voltage is below normal range ***Deactivate:*** Voltage is within normal range	Yellow lamp is sent Reduced clutch performance Reduced gearbox comfort at start and marshalling Gear changes are slow	
Clutch system	**PSID27**	FMI0	Unintentional disengagement of the clutch	***Activate:*** 1. The clutch disengages when not commanded and, 2. There is no active fault code on the SEPoC and, 3. There is no active fault code for low air pressure and, 4. There is no active fault code on any of the clutch cylinder	Yellow lamp is sent Slow gear changes Low clutch performance	***Detailed conditions to activate/deactivate*** The following conditions must be fulfilled three times (only once if the fault code-filter is switched OFF) in a row in order to set the fault code: - The clutch has been engaged for less than 10s with inactive engagement valves - The clutch cylinder position has been at least 1mm below the engaged limit at some point during this time - The clutch leaves the

FUNCTION	PID/SID	FMI J1587	ERROR	CONDITION	SYMPTOM	COMMENT
				valves and, 5. The PCB temperature is above a specific limit ***Deactivate:*** The clutch response is OK		engaged state - The clutch disengagement valves are inactive - There is no active fault code on any of the clutch cylinder position sensor (SEPoC) the clutch valves - There is no active fault code for low air pressure - The PCB temperature is above 10 dgC *The fault is deactivated if any of the following conditions are fulfilled:* - The clutch has been engaged for more than 20s with inactive engagement valves - There is an active fault code for the clutch cylinder position sensor (SEPoC)
Clutch system		FMI1	Unintentional engagement of the clutch	***Activate:*** 1. The clutch engages when not commanded and, 2. There is no active fault code on the SEPoC and, 3. There is no active fault code for low air pressure and, 4. There is no active fault code on any of the clutch cylinder valves and, 5. The PCB temperature is above a specific limit ***Deactivate:*** The clutch response is OK	Yellow lamp is sent Slow gear changes Low clutch performance	***Algorithm for activation/deactivation*** The following sequence must be passed three times (only once if the fault code-filter is switched OFF) in order to activate: - The clutch is near the disengaged position - All clutch valves are deactivated - The initial average clutch position is calculated during 0.1s - Wait for 3s - The final average clutch position is calculated during 0.1s - If the position has moved more than 1mm in the engagement direction, the FMI is set, else if the clutch has moved less than 0.2mm in the engagement direction the FMI is reset. *Additional conditions for activation:* *- There is no active fault code on any of the clutch cylinder position sensor (SEPoC) the clutch valves low air pressure* *- The PCB temperature is above 10dgC*
Clutch system		FMI7	Mechanical system not responding properly	***Activate:*** 1. The clutch does not disengage/engage properly when commanded 2. There is no active fault code on the SEPoC and, 3. There is no active fault code	Yellow lamp is sent Slow gear changes Low clutch performance	***Detailed conditions to activate/deactivate*** One of the following conditions must be fulfilled three times in a row in order to activate the fault: - The clutch position is more than 2mm from the disengaged position, after control of the clutch to the disengaged position during

FUNCTION	PID/SID	FMI J1587	ERROR	CONDITION	SYMPTOM	COMMENT
				for low air pressure and, 4. There is no active fault code on any of the clutch cylinder valves and, 5. The PCB temperature is above 10 dgC ***Deactivate:*** The clutch response is OK		1.0 s - The clutch position is not in the interval [set point +3mm; set point -1mm] after control of the clutch to near the slip point position during 1.0s - The clutch position is more than 2.5mm from the engaged position, after control of the clutch to the engaged position during 1.0s *The fault is deactivated after three successful occurrences, of control of the clutch to the requested position in 0.5s* The fault is also deactivated if - There is an active fault on the clutch position sensor - There is an active fault on any of the clutch valves - There is an active fault code for low air pressure - The PCB temperature is below 10 dgC
Clutch system		FMI12	Unintentional clutch slip	***Activate:*** The clutch can not transfer a specific torque without slipping ***Deactivate:*** The clutch can transfer a specific torque without slipping	Yellow lamp is sent The engine torque is reduced so that the clutch does not continue to slip	***Detailed conditions*** ***Activation:*** - Clutch slip is detected when the engine torque is already reduced below the "Clutch slip warning torque level" in an attempt to prevent clutch slip. The clutch slip warning level is 2500Nm for MD16 (TMF) variants and 2000Nm for other variants (SMF) - There is no active fault on any of: the sensor for the countershaft speed (SECS) the sensor for the clutch position (SEPoC) and the engine torque & engine speed is received from the engine ECU ***Deactivation:*** The clutch can transfer the maximum engine torque without slipping the fault is also deactivated at startup of the system
Clutch system		FMI11	Clutch drag	***Activate:*** The clutch transfers too much torque in disengaged position ***Deactivate:*** The clutch transfers no torque in disengaged position	Yellow lamp is sent The clutch wear is high	***Algorithm for activation/deactivation*** - Start the check when the counter shaft has been stopped with the brake during slip point calibration when the gearlever is in neutral during normal operation. - Release the brake and check the input shaft speed after 0.5s if input shaft

FUNCTION	PID/SID	FMI J1587	ERROR	CONDITION	SYMPTOM	COMMENT
						speed > 300rpm, activate this fault code if input shaft speed < 300rpm, deactivate this fault code - Continue with the slip point calibration
Digital input flash NVRAM programming enable (DIEE)	**PSID254**	FMI3	Voltage above normal or shorted high	***Activate:*** The voltage level for DIEE-pin is high ***Deactivate:*** The voltage for the DIEE-pin is low	Yellow lamp is sent Cranking is inhibited Engine can not start All communication with the control unit is disabled except from programming of MSW	The boot-program does not save any fault codes
Digital input flash NVRAM programming enable (DIEE)		FMI3	Voltage above normal or shorted high	***Active:*** The voltage level for DIEE-pin is high ***Deactivate:*** The voltage for the DIEE-pin is low	Yellow lamp is sent	If the DIEE-pin is high during normal operation the fault code is saved.
Fast clutch valves low side (VAF-)	**PSID5**	FMI3	Voltage above normal or shorted high	***Activate:*** The low-side drive is short circuit to Ubatt ***Deactivate:*** The low-side drive is OK	Yellow lamp is sent Fast engagement/disengagement disabled Reduced clutch performance Gear changes are slow	
Fast clutch valves low side (VAF-)		FMI6	Current above normal or grounded circuit	***Activate:*** 1. The low-side drive is short circuit to Gnd and 2. There is no active fault code for short circuit to Gnd on VAFE or VAFD ***Deactivate: T***he low-side drive is OK	Yellow lamp is sent Fast engagement/disengagement disabled Reduced clutch performance Gear changes are slow	
Gearbox brake	**PSID28**	FMI7	Mechanical system not responding properly	***Activate:*** The gearbox brake does not brake when the valve is activated	Yellow lamp is sent Slow gear changes at standstill	***Detailed conditions*** The following conditions must be fulfilled for five activations (only one with the fault code-filter switched OFF) of the gearbox brake in order to activate the fault code: - The activation must last for at least 0.2s - There is no active fault code on the sensor for the split cylinder position (SEPoS) - The minimum valve of the derivative of the input shaft speed during activation is

FUNCTION	PID/SID	FMI J1587	ERROR	CONDITION	SYMPTOM	COMMENT
						greater than -500 rpm/s - There is no active fault on any of the gearbox brake valve (VAGB) the sensor for the counter shaft speed (SECS) the sensor for the split cylinder position (SEPoS) low air pressure. The following conditions must be fulfilled for one activation of the gearbox brake ***in order to deactivate:*** - The minimum value of the derivative of the countershaft speed during the activation is greater than -1000rpm/s The fault is also deactivated if there is an active fault on the countershaft speed sensor (SESC), on the gearbox brake valve (VAGB), or the split position sensor (SEPoS)
Gears 1/R engagement system	**PSID25**	FMI0	Unintentional disengagement of 1:st gear	***Conditions to set the fault code:*** -The 1/R cylinder leaves the 1:st position -The 1:st cylinder valves are inactive	Yellow lamp is sent Loss of torque	***Detailed conditions to activate/deactivate*** The following conditions must be fulfilled three times (only one time if the fault code filter is switched OFF) in a row in order to set the fault code: (engagement of another gear will reset the count) - The 1/R cylinder position indicates that the 1/R gear leaves the 1:st position - The 1:st cylinder valves are inactive - There is no active fault on any of the sensor for the position of the 1/R cylinder (SEPo1R) the valve for shift to 1:st gear the valve for shift to reverse gear - There is no active fault code for low air pressure *Note: T*he fault will always have the state inactive. Check the fault count and last occurrence to get more information.
Gears 1/R engagement system		FMI1	Unintentional disengagement of reverse gear	***Conditions to set the fault code:*** -The 1/R gear leaves the reverse position -The 1/R cylinder valves are inactive	Yellow lamp is sent Loss of torque	***Detailed conditions to activate/deactivate*** The following conditions must be fulfilled three times (only one time if the fault code-filter is switched OFF) in a row in order to set the fault code: (engagement of another gear will reset the count) - The 1/R cylinder position indicates that the 1/R gear leaves the reverse position

FUNCTION	PID/SID	FMI J1587	ERROR	CONDITION	SYMPTOM	COMMENT
						- The 1/R cylinder valves are inactive - There is no active fault on any of the sensor for the position of the 1/R cylinder (SEPo1R) the valve for shift to 1:st gear the valve for shift to reverse gear - There is no active fault code for low air pressure *Note: T*he fault will always have the state inactive. Check the fault count and last occurrence to get more information.
Gears 1/R engagement system		FMI2	Unintentional disengagement of neutral gear (1:st and reverse gear cylinder)	***Conditions to set the fault code:*** -The 1/R gear leaves the neutral position -The 1/R cylinder valves are inactive	Yellow lamp is sent Loss of torque	***Detailed conditions to activate/deactivate*** The following conditions must be fulfilled three times (only one time if the fault code-filter is switched OFF) in a row in order to set the fault code: (engagement of another gear will reset the count) - The 1/R cylinder position indicates that the 1/R gear leaves the neutral position - The 1/R cylinder valves are inactive - There is no active fault on any of the sensor for the position of the 1/R cylinder (SEPo1R) the valve for shift to 1:st gear the valve for shift to reverse gear - There is no active fault code for low air pressure *Note: T*he fault will always have the state inactive. Check the fault count and last occurrence to get more information.
Gears 1/R engagement system		FMI11	Blocked engagement of 1:st gear	***Conditions to set the fault code:*** -The 1:st gear can not engage -There is no active fault code on the SEPo1R -There is no active fault code for low air pressure -There is no active fault code on any of the 1:st and reverse gear cylinder valves	Yellow lamp is sent Loss of torque The 1:st gears will not be selected by the system for a short while. After five successful gear changes a new attempt to use 1:st gear may be made	***Detailed conditions to activate/deactivate*** The following conditions must be fulfilled three times (only one time if the fault code-filter is switched OFF) in a row in order to set the fault code:(engagement of another gear will reset the count) - The valve for reaching 1:st gear is activated for at least 0.8s - The 1/R cylinder position sensor indicates that 1:st position is not engaged - There is no active fault on any of the 1/R position sensor (SEPo1R) the valve for shift to 1:st gear the valve for shift to reverse gear

FUNCTION	PID/SID	FMI J1587	ERROR	CONDITION	SYMPTOM	COMMENT
						- There is no active fault code for low air pressure The fault is deactivated if any of the following conditions are fulfilled: - The 1/R position sensor indicates that 1:st position is engaged - There is an active fault code on any of the 1/R position sensor (SEPo1R) the valve for shift to 1:st gear the valve for shift to reverse gear
Gears 1/R engagement system		FMI12	Blocked engagement of reverse gear	***Conditions to set the fault code:*** -The reverse gear can not engage	Yellow lamp is sent The R gear can not engage, but the system will try to engage it as long as the gearlever is in the reverse position	***Detailed conditions to activate/deactivate*** The following conditions must be fulfilled three times (only one time if the fault code filter is switched OFF) in a row in order to set the fault code: (engagement of another gear will reset the count) - The valve for reaching the reverse gear is activated for at least 0.8s - The 1/R cylinder position sensor indicates that R position is not engaged - There is no active fault on any of the 1/R position sensor (SEPo1R) the valve for shift to 1:st gear the valve for shift to reverse gear - There is no active fault code for low air pressure. The fault is deactivated if any of the following conditions are fulfilled: - The 1/R position sensor indicates that R position is engaged - There is an active fault code on any of the 1/R position sensor (SEPo1R) the valve for shift to 1:st gear the valve for shift to reverse gear
Gears 1/R engagement system		FMI7	Blocked engagement of neutral gear (1:st and reverse gear cylinder)	***Conditions to set the fault code:*** -The neutral gear (1:st and reverse gear cylinder) can not engage	Yellow lamp is sent	***Detailed conditions to activate/deactivate*** The following conditions must be fulfilled three times (only one time if the fault code-filter is switched OFF) in a row in order to set the fault code: (engagement of another gear will reset the count) - The valve for reaching the reverse gear is activated for at least 0.8s - The 1/R cylinder position sensor indicates that neutral position is not engaged

FUNCTION	PID/SID	FMI J1587	ERROR	CONDITION	SYMPTOM	COMMENT
						- There is no active fault code on any of the 1/R position sensor (SEPo1R) the valve for shift to 1:st gear the valve for shift to reverse gear - There is no active fault code for low air pressure The fault is deactivated if any of the following conditions are fulfilled: - The 1/R position sensor indicates that neutral position is engaged - There is an active fault code on any of the 1/R position sensor (SEPo1R) the valve for shift to 1:st gear the valve for shift to reverse gear
Gears 2/3 engagement system	**PSID26**	FMI0	Unintentional disengagement of 2:nd gear	***Conditions to set the fault code:*** -The 2/3 cylinder position indicates that the 2/3 gear leaves the 2:nd position - The 2:nd cylinder valves are inactive	Yellow lamp is sent Loss of torque	***Detailed conditions to activate/deactivate*** The following conditions must be fulfilled three times (only one time if the fault code-filter is switched OFF) in a row in order to set the fault code: (engagement of another gear will reset the count) - The 2/3 cylinder position indicates that the 2/3 gear leaves the 2:nd position - The 2:nd cylinder valves are inactive - There is no active fault on any of the sensor for the position of the 2/3 cylinder (SEPo23) the valve for shift to 2:nd gear the valve for shift to 3:rd gear - There is no active fault code for low air pressure *Note:* The fault will always have the state inactive. Check the fault count and last occurrence to get more information.
Gears 2/3 engagement system		FMI1	Unintentional disengagement of 3:rd gear	***Conditions to set the fault code:*** -The 2/3 cylinder leaves the 3:rd position - The 3:rd cylinder valves are inactive	Yellow lamp is sent Loss of torque	***Detailed conditions to activate/deactivate*** The following conditions must be fulfilled three times (only once if the fault code-filter is switched OFF) in a row in order to set the fault code: (engagement of another gear will reset the count) - The 2/3 cylinder position indicates that the 2/3 gear leaves the 3:rd position - The 3:rd cylinder valves are inactive - There is no active fault on any of the sensor for the position of the 2/3 cylinder

FUNCTION	PID/SID	FMI J1587	ERROR	CONDITION	SYMPTOM	COMMENT
						(SEPo23) the valve for shift to 2:nd gear the valve for shift to 3:rd gear - There is no active fault code for low air pressure *Note:* The fault will always have the state inactive. Check the fault count and last occurrence to get more information.
Gears 2/3 engagement system		FMI2	Unintentional disengagement of neutral gear (2:nd and 3:rd gear cylinder)	***Conditions to set the fault code:*** -The 2/3 cylinder leaves the neutral position - The 2/3 cylinder valves are inactive	Yellow lamp is sent	***Detailed conditions to activate/deactivate*** The following conditions must be fulfilled three times (only once if the fault code-filter is switched OFF) in a row in order to set the fault code: (engagement of another gear will reset the count) - The 2/3 cylinder position indicates that the 2/3 gear leaves the neutral position - The 2/3 cylinder valves are inactive - There is no active fault on any of the sensor for the position of the 2/3 cylinder (SEPo23) the valve for shift to 2:nd gear the valve for shift to 3:rd gear - There is no active fault code for low air pressure *Note:* The fault will always have the state inactive. Check the fault count and last occurrence to get more information.
Gears 2/3 engagement system		FMI11	Blocked engagement of 2:nd gear	***Conditions to set the fault code:*** -The 2:nd gear can not engage	Yellow lamp is sent Loss of torque The 2:nd gear will not be selected by the system for a short while. After five successful gearshifts a new attempt to use 2:nd gear may be made	***Detailed conditions to activate/deactivate*** The following conditions must be fulfilled three times (only once if the fault code-filter is switched OFF) in a row in order to set the fault code: (engagement of another gear will reset the count) - The valve for reaching 2:nd gear is activated for at least 0.8s - The 2/3 cylinder position sensor indicates that 2:nd position is not engaged - There is no active fault on any of the 2/3 position sensor (SEPo23) the valve for shift to 2:nd gear the valve for shift to 3:rd gear - There is no active fault code for low air pressure *The fault is deactivated if any of the following conditions are fulfilled:* - The 2/3 position sensor indicates that 2:nd 2;nd

FUNCTION	PID/SID	FMI J1587	ERROR	CONDITION	SYMPTOM	COMMENT
						position is engaged - There is an active fault code on any of the 2/3 position sensor (SEPo23) the valve for shift to 2:nd gear the valve for shift to 3:rd gear
Gears 2/3 engagement system		FMI12	Blocked engagement of 3:rd gear	***Conditions to set the fault code:*** -The 3:rd gear can not engage	Yellow lamp is sent Loss of torque The 3:rd gear will not be selected by the system for a short while. After five successful gearshifts a new attempt to use 3:rd gear may be made	***Detailed conditions to activate/deactivate*** The following conditions must be fulfilled three times (only once if the fault code-filter is switched OFF) in a row in order to set the fault code: (engagement of another gear will reset the count) - The valve for reaching 3:rd gear is activated for at least 0.8s - The 2/3 cylinder position sensor indicates that 3:rd position is not engaged - There is no active fault on any of the 2/3 position sensor (SEPo23) the valve for shift to 2:nd gear the valve for shift to 3:rd gear - There is no active fault code for low air pressure *The fault is deactivated if any of the following conditions are fulfilled:* - The 2/3 position sensor indicates that 3:rd position is engaged - There is an active fault code on any of the 2/3 position sensor (SEPo23) the valve for shift to 2:nd gear the valve for shift to 3:rd gear
Gears 2/3 engagement system		FMI7	Blocked engagement of neutral gear (2:nd and 3:rd gear cylinder)	***Conditions to set the fault code:*** -The neutral gear (2:nd 3:rd gear cylinder) can not engage	Yellow lamp is sent	***Detailed conditions to activate/deactivate*** The following conditions must be fulfilled three times (only once if the fault code-filter is switched OFF) in a row in order to set the fault code: (engagement of another gear will reset the count) - The valve for reaching gear (2:nd and 3:rd gear cylinder) is activated for at least 0.8s - The 2/3 cylinder position sensor indicates that neutral position is not engaged - There is no active fault code on any of the 2/3 position sensor (SEPo23) the valve for shift to 2:nd gear the valve for shift to 3:rd gear - There is no active fault

FUNCTION	PID/SID	FMI J1587	ERROR	CONDITION	SYMPTOM	COMMENT
						code for low air pressure *The fault is deactivated if any of the following conditions are fulfilled:* - The 2/3 position sensor indicates that neutral position is engaged - There is an active fault code on any of the 2/3 position sensor (SEPo23) the valve for shift to 2:nd gear the valve for shift to 3:rd gear
J1708/J1587	**SID250**	FMI9	Abnormal update rate	***Activate:*** The FMI shall be set if any of the messages* have not been received on the bus for 30s ***Deactivate:*** The FMI shall be cleared if all messages* are sent on the bus *PID190, PID85 and PPID212	Yellow lamp is sent Fault codes can not be read On-vehicle tests can not be performed	
J1939	**SID231**	FMI2	Data erratic, intermittent or incorrect	***Active:*** This FMI shall be set if the CAN transceiver signals "bus-off" ***Deactivate:*** FMI cleared if CAN-transceiver does not signal "bus-off"	Yellow lamp is sent Much reduced gear selection and gear change performance	
Missing data on J1939 form BECU	**PSID204**	FMI8	Abnormal frequency, pulse width or period	***Activate:*** The FMI shall be set if the wheel speeds from the BECU (MID136) are incorrect ***Deactivate:*** The FMI shall be cleared if the wheel speeds from the BECU (MID136) are correct	Yellow lamp Automatic gear selection enters backup mode with gear changes only at certain vehicle speeds	
Missing data on J1939 form BECU		FMI9	Abnormal update rate	***Activate:*** The FMI shall be set if message WSI from BECU (MID136) is not received within 1s ***Deactivate:*** The FMI shall be cleared if message WSI is received at normal rate	Yellow lamp Automatic gear selection enters backup mode with gear changes only at certain vehicle speeds	
Missing data on J1939	**PSID207**	FMI9	Abnormal update rate	***Activate:*** The FMI shall be set if message VP6	Yellow lamp Slow response on manual gear	

FUNCTION	PID/SID	FMI J1587	ERROR	CONDITION	SYMPTOM	COMMENT
form GECU				from GECU (MID223) is not received within 1s ***Deactivate:*** The FMI shall be cleared if message VP6 is received at normal rate	changes and slow response when buttons are pressed on the gear lever.	
Missing data on J1939 from the adaptive cruise control	**PSID211**	FMI9	Abnormal update rate	***Activate:*** The FMI shall be set if message ACC1 from ACC (MID219) is not received within 1s, and ACC is installed ***Deactivate:*** The FMI shall be cleared if message ACC1 is received at normal rate	Yellow lamp The retarder ACC function does not work	
Missing data on J1939 from the EMS	**PSID200**	FMI9	Abnormal update rate	***Activate:*** The FMI shall be set if message EEC1 from EECU is not received within 200ms ***Deactivate:*** The FMI shall be cleared if message EEC1 is received at normal rate	Yellow lamp If there is no POWERTRAIN_CAN, automatic gear selection enters backup mode with gear changes only at certain vehicle speeds If there is no Powertrain_CAN and the engine does not receive any messages from the TECU, the gear changes will be slow	
Missing data on J1939 from the light control module (LCM)	**PSID210**	FMI9	Abnormal update rate	***Activate:*** The FMI shall be set if message VP37 from LCM (MID216) is not received within 10s ***Deactivate:*** The FMI shall be cleared if message VP37 is received at normal rate	Yellow lamp The start gear might be wrong Automatic gear selection performance might be reduced a certain time after start Automatic gear selection performance might be reduced a certain time after a trailer has been connected/disconnected	
Missing data on J1939	**PSID208**	FMI9	Abnormal update rate	***Activate:*** The FMI shall be set if message VW	Yellow lamp The start gear might be wrong	

FUNCTION	PID/SID	FMI J1587	ERROR	CONDITION	SYMPTOM	COMMENT
from the suspension ECU (ECS)				from ECS (MID150) is not received within 10s, and ECS is installed ***Deactivate:*** The FMI shall be cleared if message VW is received at normal rate	after loading and unloading	
Missing data on J1939 from VECU	**PSID201**	FMI8	Abnormal frequency, pulse width or period	***Activate:*** The FMI shall be set if the acc pedal pos or service brake-switch from the VECU (MID144) is incorrect ***Deactivate:*** The FMI shall be cleared if the acc pedal pos and service brake-switch from the VECU (MID144) are correct	Yellow lamp If pedal pos is undefined, automatic gear selection enters backup mode with gear changes only at certain vehicle speeds If pedal pos is undefined, gearbox comfort at start and marshalling might be reduced If service brake is undefined, automatic gear selection enters backup mode with gear changes only at certain vehicle speeds	
Missing data on J1939 from VECU		FMI9	Abnormal update rate	***Activate:*** The FMI shall be set if message VP2 from VECU (MID144) is not received within 100ms ***Deactivate:*** The FMI shall be cleared if message VP2 is received at normal rate	Yellow lamp Automatic gear selection enters backup mode with gear changes only at certain vehicle speeds Gearbox comfort at start and marshalling might be reduced	
Powertrain CAN	**PSID232**	FMI2	Data erratic, intermittent or incorrect	***Activate****:* The FMI shall be set if the CAN transceiver signals "busOFF" ***Deactivate****:* The FMI shall be cleared if the CAN-transceiver does not signal "busOFF"	Yellow lamp is sent Reduced automatic gear selection and gear change performance	This fault code is only valid for vehicles where a Pwertrain_CAN link exist between the TECU and the engine.
Powertrain CAN		FMI9	Abnormal update rate	***Activate:*** The FMI shall be set if message VP24/MID128 is	Yellow lamp is sent Reduced automatic gear	

FUNCTION	PID/SID	FMI J1587	ERROR	CONDITION	SYMPTOM	COMMENT
				not received within 100ms ***Deactivate:*** The FMI shall be cleared if message VP24/MID128 is received at normal rate	selection and gear change performance	
Program memory	**SID240**	FMI2	Data erratic, intermittent or incorrect	***Activate:*** Flash CS error or program code missing ***Deactivate***: Flash CS OK	Yellow lamp is sent Cranking is inhibited Engine can not start	
Range engagement system	**PSID24**	**FMI0**	Unintentional disengagement of low range	***Conditions to set the fault code:*** -The range cylinder leaves the low range position -The range cylinder valves are inactive	Yellow lamp is sent Loss of torque	***Detailed conditions to activate/deactivate***: The following conditions must be fulfilled three times (only once if the fault code-filter is switched OFF) in a row, in order to set the fault code: (engagement of another gear will reset the count) - The range cylinder position indicates that range gear leaves the low range position - The range cylinder valves are inactive - There is no active fault on any of the sensor for the position of the range cylinder (SEPoR) the valve for shift to high range the valve for shift to low range - There is no active fault code for low air pressure note: The fault will always have the state inactive. Check fault-count and last occurrence to get more information
Range engagement system		FMI1	Unintentional disengagement of high range	***Conditions to set the fault code:*** -The range cylinder leaves the high range position -The range cylinder valves are inactive	Yellow lamp is sent Loss of torque	***Detailed conditions to activate/deactivate***: The following conditions must be fulfilled three times (only once if the fault code-filter is switched OFF) in a row, in order to set the fault code: (engagement of another gear will reset the count) - The range cylinder position indicates that the range gear leaves the high range position - The range cylinder valves are inactive - There is no active fault on any of the sensor for the position of the range cylinder (SEPoR) the valve

FUNCTION	PID/SID	FMI J1587	ERROR	CONDITION	SYMPTOM	COMMENT
						for shift to high range the valve for shift to low range - There is no active fault code for low air pressure *note*: The fault will always have the state inactive. Check fault-count and last occurrence to get more information
Range engagement system		FMI11	Blocked engagement of low range	***Conditions to set the fault code:*** -The low range gear can not engage	Yellow lamp is sent Loss of torque	***Detailed conditions to activate/deactivate***: The following conditions must be fulfilled three times (only once if the fault code-filter is switched OFF) in a row, in order to set the fault code: (engagement of another gear will reset the count) - The low range can not engage within 3.8s - The gearbox oil temperature is above 10dgC - There is no active fault code on any of the sensor for the position of the range cylinder (SEPoR) low air pressure the range cylinder valves ***The fault is deactivated if any of the following conditions are fulfilled:*** - The range cylinder position sensor indicates that low range is engaged - The gearbox oil temperature is below 10dgC - There is an active fault on any of the sensor for the position of the range cylinder (SEPoR) low air pressure the range cylinder valves
Range engagement system		FMI12	Blocked engagement of high range	***Conditions to set the fault code:*** -The high range gear can not engage	Yellow lamp is sent Loss of torque	***Detailed conditions to activate/deactivate***: The following conditions must be fulfilled three times (only once if the fault code-filter is switched OFF) in a row, in order to set the fault code: (engagement of another gear will reset the count) - The high range gear can not engage within 3.8s - The gearbox oil temperature is above 10dgC - There is no active fault on any of the range position sensor (SEPoR) low air pressure the range cylinder valves - There is no active fault code for low air pressure

FUNCTION	PID/SID	FMI J1587	ERROR	CONDITION	SYMPTOM	COMMENT
						The fault is deactivated if any of the following conditions are fulfilled: - The range cylinder position sensor indicates that high range is engaged - The gearbox oil temperature is below 10dgC - There is an active fault code on any of the range position sensor (SEPoR) low air pressure the range cylinder valves
Sensor for the 1:st and reverse gear cylinder (SEPo1R)	**PPID10**	FMI2	Data erratic, intermittent or incorrect	***Activate:*** The position sensor is distributing a temperature-signal from the sensor ASIC, if the value from this sensor deviates too much this fault code is triggered. ***Deactivate:***	Yellow lamp is sent Slow gear changes	***Detailed conditions to activate / deactivate:*** ***Activate:*** The position sensor is distributing a temperature-signal from the sensor ASIC, if the value from this sensor deviates too much this fault code is triggered, the diagnostics are based upon cross-reference between all four position-sensors. This means that if the value differs more than +/- 20dgC from the average-temp, if the temperature is out of boundary -60dgC to +160dgC or if the temperature changes at a rate higher than 10dgC during 15s, then this fault code is set. ***Deactivate:*** Fault code stays until a clear DTC command is received
Sensor for the 1:st and reverse gear cylinder (SEPo1R)		FMI3	Voltage above normal or shorted high	***Activate:*** Status from the ASIC is short circuit to Ubatt ***Deactivate***: Status is OK	Yellow lamp is sent Slow gear changes	
Sensor for the 1:st and reverse gear cylinder (SEPo1R)		FMI5	Current below normal or open circuit	***Activate:*** Status from the ASIC is open circuit ***Deactivate:*** Status is OK	Yellow lamp is sent Slow gear changes	
Sensor for the 1:st and reverse gear cylinder (SEPo1R)		FMI6	Current above normal or grounded circuit	***Activate:*** Status from the ASIC is short circuit to Gnd ***Deactivate:*** Status is OK	Yellow lamp is sent Slow gear changes	
Sensor for the 1:st and reverse gear cylinder (SEPo1R)		FMI13	Calibration value out of range	***Activate:*** The Checksum of the NVRAM is not correct, or the sensor has not been calibrated ***Deactivate:*** Sensor signal	Yellow lamp is sent Cranking is inhibited Engine can not start	

FUNCTION	PID/SID	FMI J1587	ERROR	CONDITION	SYMPTOM	COMMENT
				has been successfully calibrated		
Sensor for the inclination of the gearbox (SEIG)	**PPID140**	FMI2	Data erratic, intermittent or incorrect	***Activate:*** 1. The sensor signal is above or below normal range and 2. The vehicle has been standing still for a specific time ***Deactivate:*** The sensor signal is in the normal range	Yellow lamp is sent The start gear might be wrong Gear selection performance might be reduced Downhill and uphill gear change performance may be reduced	
Sensor for the PCB temperature	**PPID55**	FMI0	Data valid but above normal operational range	***Activate***: temp above 125dgC ***Deactivate:*** temp below 125dgC	Yellow lamp is sent	
Sensor for the position of the 2:nd and 3:rd gear cylinder (SEPo23)	**PPID11**	FMI2	Data erratic, intermittent or incorrect	***Activate:*** The position sensor is distributing a temperature-signal from the sensor ASIC, if the value from this sensor deviates too much this fault code is triggered. ***Deactivate:***	Yellow lamp is sent Slow gear changes	***Detailed conditions to activate / deactivate:*** ***Activate:*** The position sensor is distributing a temperature-signal from the sensor ASIC, if the value from this sensor deviates too much this fault code is triggered, the diagnostics are based upon cross-reference between all four position-sensors. This means that if the value differs more than +/- 20dgC from the average-temp, if the temperature is out of boundary -60dgC to +160dgC or if the temperature changes at a rate higher than 10dgC during 15s, then this fault code is set. ***Deactivate:*** Fault code stays until a clear DTC command is received
Sensor for the position of the 2:nd and 3:rd gear cylinder (SEPo23)		FMI3	Voltage above normal or shorted high	***Activate:*** Status from the ASIC is short circuit to Ubatt ***Deactivate:*** Status is OK	Yellow lamp is sent Slow gear changes	
Sensor for the position of the 2:nd and 3:rd gear cylinder (SEPo23)		FMI5	Current below normal or open circuit	***Activate***: Status from the ASIC is open circuit ***Deactivate:*** Status is OK	Yellow lamp is sent Slow gear changes	
Sensor for the position of the 2:nd		FMI6	Current above normal or grounded circuit	***Activate***: Status from the ASIC is short circuit to Gnd	Yellow lamp is sent Slow gear changes	

FUNCTION	PID/SID	FMI J1587	ERROR	CONDITION	SYMPTOM	COMMENT
and 3:rd gear cylinder (SEPo23)				***Deactivate***: Status is OK		
Sensor for the position of the 2:nd and 3:rd gear cylinder (SEPo23)		FMI13	Calibration value out of range	***Activate:*** The Checksum of the NVRAM is not correct, or the sensor has not been calibrated ***Deactivate:*** Sensor signal has been successfully calibrated	Yellow lamp is sent Cranking is inhibited Engine can not start	
Sensor for the position of the range (SEPoR)	**PID31**	FMI2	Data erratic, intermittent or incorrect	***Activate:*** The position sensor is distributing a temperature-signal from the sensor ASIC, if the value from this sensor deviates too much this fault code is triggered. ***Deactivate:***	Yellow lamp is sent Slow gear changes	***Detailed conditions to activate / deactivate:*** ***Activate:*** The position sensor is distributing a temperature-signal from the sensor ASIC, if the value from this sensor deviates too much this fault code is triggered, the diagnostics are based upon cross-reference between all four position-sensors. This means that if the value differs more than +/- 20dgC from the average-temp, if the temperature is out of boundary -60dgC to +160dgC or if the temperature changes at a rate higher than 10dgC during 15s, then this fault code is set. ***Deactivate:*** Fault code stays until a clear DTC command is received
Sensor for the position of the range (SEPoR)		FMI3	Voltage above normal or shorted high	***Activate***: Status from the ASIC is short circuit to Ubatt ***Deactivate***: Status is OK	Yellow lamp is sent Slow gear changes	
Sensor for the position of the range (SEPoR)		FMI5	Current below normal or open circuit	***Activate***: Status from the ASIC is open circuit ***Deactivate***: Status is OK	Yellow lamp is sent Slow gear changes	
Sensor for the position of the range (SEPoR)		FMI6	Current above normal or grounded circuit	***Activate***: Status from the ASIC is short circuit to Gnd ***Deactivate***: Status is OK	Yellow lamp is sent Slow gear changes	
Sensor for the position of the range (SEPoR)		FMI13	Calibration value out of range	***Activate***: The Checksum of the NVRAM is not correct, or the sensor has not been calibrated ***Deactivate***: Sensor signal	Yellow lamp is sent Cranking is inhibited Engine can not start	

FUNCTION	PID/SID	FMI J1587	ERROR	CONDITION	SYMPTOM	COMMENT
				has been successfully calibrated		
Sensor for the position of the Split (SEPoS)	**PID32**	FMI2	Data erratic, intermittent or incorrect	***Activate:*** The position sensor is distributing a temperature-signal from the sensor ASIC, if the value from this sensor deviates too much this fault code is triggered. ***Deactivate:***	Yellow lamp is sent Slow gear changes	***Detailed conditions to activate / deactivate:*** ***Activate:*** The position sensor is distributing a temperature-signal from the sensor ASIC, if the value from this sensor deviates too much this fault code is triggered, the diagnostics are based upon cross-reference between all four position-sensors. This means that if the value differs more than +/- 20dgC from the average-temp, if the temperature is out of boundary -60dgC to +160dgC or if the temperature changes at a rate higher than 10dgC during 15s, then this fault code is set. ***Deactivate:*** Fault code stays until a clear DTC command is received
Sensor for the position of the Split (SEPoS)		FMI3	Voltage above normal or shorted high	***Activate:*** Status from the ASIC is short circuit to Ubatt ***Deactivate:*** Status is OK	Yellow lamp is sent Slow gear changes	
Sensor for the position of the Split (SEPoS)		FMI5	Current below normal or open circuit	***Activate***: Status from the ASIC is open circuit ***Deactivate***: Status is OK	Yellow lamp is sent Slow gear changes	
Sensor for the position of the Split (SEPoS)		FMI6	Current above normal or grounded circuit	***Activate:*** Status from the ASIC is short circuit to Gnd ***Deactivate***: Status is OK	Yellow lamp is sent Slow gear changes	
Sensor for the position of the Split (SEPoS)		FMI13	Calibration value out of range	***Activate:*** The Checksum of the NVRAM is not correct, or the sensor has not been calibrated ***Deactivate:*** Sensor signal has been successfully calibrated	Yellow lamp is sent Cranking is inhibited Engine can not start	
Sensor for the pressure of the supply air (SEPrSA)	**PID37**	FMI0	Data vaild but above normal operational range	***Activate:*** 1. Sensor signal is in normal range 2. Pressure is above 10.0 [bar] ***Deactivate:*** 1. Sensor signal is in normal range 2. Pressure is	Yellow lamp is sent reduced clutch performance	

FUNCTION	PID/SID	FMI J1587	ERROR	CONDITION	SYMPTOM	COMMENT
				below 10.0 [bar]		
Sensor for the pressure of the supply air (SEPrSA)		FMI1	Data valid but below operational range	***Activate:*** 1. Sensor signal is in normal range 2. Pressure is below 5.0 [bar] ***Deactivate:*** 1. Sensor signal is in normal range 2. Pressure is above 5.0 [bar]	Yellow lamp is sent The symbol for compressed air, gearbox is sent Gear changes may be absent Reduced clutch performance	
Sensor for the pressure of the supply air (SEPrSA)		FMI3	Voltage above normal or shorted high	***Activate:*** The sensor signal is above normal range ***Deactivate:*** The sensor signal is in normal range	Yellow lamp is sent	
Sensor for the pressure of the supply air (SEPrSA)		FMI5	Current below normal or open circuit	***Activate:*** The sensor signal is below normal range ***Deactivate:*** The sensor signal is in normal range	Yellow lamp is sent	
Sensor for the speed on the counter shaft (SESC)	**PID161**	FMI1	Data valid but below operational range	***Activate:*** 1. The sensor signal is within normal range and, 2. The counter shaft speed differs from both the main shaft speed (SESM) and the vehicle speed received from the vehicle ECU when the counter shaft is rotating ***Deactivate:*** 1. The sensor signal is within normal range 2. The counter shaft speed and the main shaft speed are equal when the counter shaft is rotating	Yellow lamp is sent Reduced gear change performance Gearbox brake up shifts can not be used Slip point can not be updated which will give reduced performance at starts Start gear engagement only possible at standstill and when the vehicle speed is high enough to synchronize the main box with the engine	Detailed condition to activate: The following conditions must be fulfilled for a time of 2.0s in order to activate: A gear (not neutral) is engaged in the gearbox The value of the input shaft speed calculated from the main shaft speed sensor (SESM) is more than 300rpm, or the value of the input shaft speed calculated from the counter shaft speed sensor (SESC) is more than 300rpm -The values of the input shaft speed calculated from the counter shaft speed sensor (SESC) and the main shaft speed sensor (SESM) differ more than 50rpm -The values of the input shaft speed calculated from the counter shaft speed sensor (SESC) and the vehicle speed received from the vehicle ECU differ more than 30rpm -The values of the input shaft speed calculated from the main shaft speed sensor (SESM) and the vehicle speed received from the vehicle ECU differ less than 30rpm -There is no active fault on any of -The sensor for the main shaft speed (SESM)

FUNCTION	PID/SID	FMI J1587	ERROR	CONDITION	SYMPTOM	COMMENT
						-The sensor for the position of the split cylinder (SEPoS) -The sensor for the position of the shift cylinder1R (SEPo1R) -The sensor for the position of the shift cylinder 23 (SEPo23) -The sensor for the position of teh range cylinder (SEPoR) The fault is deactivated if the following conditions are fulfilled for a time of 2.0s: -A gear (not neutral) is engaged in the gearbox -The value of the input shaft speed calculated from the countershaft speed sensor (SESC) is more than 300rpm, or -the value of the input shaft speed calculated from the main shaft speed sensor (SESM) is more than 300rpm -The values of the input shaft speed calculated from the countershaft speed sensor (SESC) and the main shaft speed sensor (SESM) differ less than 50rpm The fault is also deactivated if the following conditions are fulfilled for a time of 2.0s: -A neutral gear is engaged in the gearbox -The engine speed is above 400rpm -The clutch is engaged -Direct or indirect split is engaged -The values of the input shaft speed is calculated from the counter shaft speed sensor (SESC) and the engine speed received from the engine ECU differ less than 50 rpm The fault is also deactivated if the signal from the countershaft speed sensor (SESC) is not within normal range or if there is an active fault code on any of: -The clutch position sensor (SEPoC) -The sensor for the position of the split cylinder (SEPoS) -The sensor for the position of the shift cylinder1R (SEPo1R) -The sensor for the position

FUNCTION	PID/SID	FMI J1587	ERROR	CONDITION	SYMPTOM	COMMENT
						of the shift cylinder 23 (SEPo23) -The sensor for the position of teh range cylinder (SEPoR)
Sensor for the speed on the counter shaft (SESC)		FMI4	Voltage below normal or shorted low	***Activate:*** The sensor signal is below normal range. ***Deactivate:*** The sensor signal is within normal range	Yellow lamp is sent Reduced gear change performance Gearbox brake up shifts can not be used Slip point cannot be updated which will give reduced performance at starts Start gear engagement only possible at standstill and when the vehicle speeds is high enough to synchronize the main box with the engine	
Sensor for the speed on the counter shaft (SESC)		FMI5	Current below normal or open circuit	***Activate:*** The sensor signal is above normal range ***Deactivate:*** The sensor signal is within normal range	Yellow lamp is sent Reduced gear change performance Gearbox brake up shifts can not be used Slip point cannot be updated which will give reduced performance at starts Start gear engagement only possible at standstill and when the vehicle speed is high enough to synchronize the main box with the engine	
Sensor for the speed on the main shaft (SESM)	**PID160**	FMI1	Data valid but below operational range	***Activate:*** 1. Sensor signal is within normal range and 2. The main shaft speed differs from both the value of the countershaft speed and the vehicle speed received from the vehicle ECU	Yellow lamp is sent Reduced gear change performance Reduced gear change comfort	Detailed condition to activate: The following conditions must be fulfilled for a time of 2.0s in order to activate: A gear (not neutral) is engaged in the gearbox The value of the input shaft speed calculated from the main shaft speed sensor (SESM) is more than 300rpm, or the value of the input shaft speed calculated

FUNCTION	PID/SID	FMI J1587	ERROR	CONDITION	SYMPTOM	COMMENT
				Deactivate: *1. Sensor signal is within normal range and,* *2. The main shaft speed and the counter shaft speed are equal when the main shaft is rotating*		from the counter shaft speed sensor (SESC) is more than 300rpm The values of the input shaft speed calculated from the main shaft speed sensor (SESM) and the counter shaft speed sensor (SESC) differ more than 50rpm The values of the input shaft speed calculated from the main shaft speed sensor (SESM) and the vehicle speed received from the vehicle ECU differ more than 30rpm The values of the input shaft speed calculated from the counter shaft speed sensor (SESC) and the vehicle speed received from the vehicle ECU differ less than 30rpm There is no active fault on any of The sensor for the countershaft speed (SECS) The sensor for the position of the split cylinder (SEPoS) The sensor for the position of the shift cylinder1R (SEPo1R) The sensor for the position of the shift cylinder 23 (SEPo23) The sensor for the position of teh range cylinder (SEPoR) The following conditions must be fulfilled for a time of 2.0s in order to deactivate: A gear (not neutral) is engaged in the gearbox The value of the input shaft speed calculated from the main shaft speed sensor (SESM) is more than 300rpm, or the value of the input shaft speed calculated from the counter shaft speed sensor (SESC) is more than 300rpm The value of the input shaft speed calculated from the main shaft speed sensor (SESM) and the counter shaft speed sensor (SESC) differ less than 50rpm The fault is also deactivated if The sensor signal (SESM) is not within normal range There is an active fault on any of The sensor for the countershaft speed (SECS) The sensor for the position of the split cylinder (SEPoS)

FUNCTION	PID/SID	FMI J1587	ERROR	CONDITION	SYMPTOM	COMMENT
						The sensor for the position of the shift cylinder1R (SEPo1R) The sensor for the position of the shift cylinder 23 (SEPo23) The sensor for the position of teh range cylinder (SEPoR)
Sensor for the speed on the mainshaft (SESM)		FMI2	Data erratic, intermittent or incorrect	***Activate:*** The sensor indicates wrong traveling direction ***Deactivate:*** The sensor indicates correct traveling direction	Yellow lamp is sent Reduced gear change performance	Detailed conditions to activate The following conditions must be fulfilled for a time of 2.0s in order to activate: The input shaft speed calculated from the countershaft speed sensor (SESC) is above 300 rpm and the clutch is engaged or The input shaft speed calculated from the countershaft speed sensor (SECS) is above 600 rpm, the clutch position is more engaged than the slip point and the engine speed is received from the engine ECU and above 600rpm. A forward gear is engaged in the gearbox and the main shaft speed sensor (SESM) indicates reverse movement or a reverse gear is engaged and the main shaft speed sensor (SESM) indicates forward movement There is no other active fault on the sensor for the main shaft speed (SESM) There is no active fault on any of: -The sensor for the countershaft speed (SECS) -The sensor for the clutch position (SePoC) -The sensor for the position of the split cylinder (SePoS) -The sensor for the position of the shift cylinder (1R SEPo1R) -The sensor for the position of the shift cylinder (23 SEPo23) -The sensor for the range cylinder (SEPoR) The fault is deactivated if the following conditions are fulfilled for a time of 2,0s: The input shaft speed calculated from the counter shaft speed sensor (SECS) is above 300 rpm and the clutch is engaged or The input shaft speed calculated from the counter shaft

FUNCTION	PID/SID	FMI J1587	ERROR	CONDITION	SYMPTOM	COMMENT
						speed sensor (SECS) is above 600 rpm, the clutch position is more engaged than the slip point and the engine speed is received from the engine ECU and above 600rpm A forward gear is engaged in the gearbox and the main shaft speed sensor (SESM) indicates forward movement or A reverse gear is engaged and the main shaft speed sensor (SESM) indicates reverse movement. The fault is also deactivated if the main shaft speed sensor (SESM) signal is not within normal range, or if there is an active fault on any of the sensors: -The sensor for the countershaft speed (SECS) -The sensor for the clutch position (SePoC) -The sensor for the position of the split cylinder (SePoS) -The sensor for the position of the shift cylinder (1R SEPo1R) -The sensor for the position of the shift cylinder (23 SEPo23) -The sensor for the range cylinder (SEPoR)
Sensor for the speed on the main shaft (SESM)		FMI3	Voltage above normal or shorted high	***Activate***: Signal or supply voltage is above normal range ***Deactivate***: Signal and supply voltage is in normal range.	Yellow lamp is sent Reduced gear change performance Reduced gear change comfort	
Sensor for the speed on the main shaft (SESM)		FMI4	Voltage below normal or shorted low	***Activate:*** Signal and supply voltage is below normal range. ***Deactivate:*** Signal and supply voltage is within normal range	Yellow lamp is sent Reduced gear change performance Reduced gear change comfort	
Sensor for the speed on the main shaft (SESM)		FMI5	Current below normal or open circuit	***Activate:*** ***1.***Signal voltage is below normal range and, 2. Supply voltage is in the normal range ***Deactivate:*** Signal and supply voltage is in the normal range	Yellow lamp is sent Reduced gear change performance Reduced gear change comfort	
Sensor for	**PID177**	FMI0	Data valid but	***Activate low:***	***Low:***	Gearbox oil temperature

FUNCTION	PID/SID	FMI J1587	ERROR	CONDITION	SYMPTOM	COMMENT
the temperature of the gearbox oil (SETeGO			above normal operational range	1.The sensor signal is in normal range 2. Temperature is above 100dgC during 18000s ***Deactivate low:*** 1. The sensor signal is in normal range 2. Temperature is below 100dgC ***Activate medium:*** 1. The sensor signal is in normal range 2. Temperature above 120dgC during 600s ***Deactivate medium:*** 1. The sensor signal is in normal range 2. Temperature is below 120dgC ***Activate high:*** 1. The sensor signal is in normal range 2. Temperature is above 140dgC during 30s ***Deactivate high:*** 1. The sensor signal is in normal range Temperature is below 140dgC	Yellow lamp is sent Symbol for high gearbox oil temperature is lit ***Medium:*** Yellow lamp is sent Symbol for high gearbox oil temperature is lit ***High:*** Red lamp is sent Symbol for high gearbox oil temperature is lit	fault codes are only set if the vehicle has oil temperature sensor functionality installed
Sensor for the temperature of the gearbox oil (SETeGO		FMI4	Voltage below normal or shorted low	***Activate:*** The sensor signal is below normal range ***Deactivate:*** The sensor signal is in normal range	Yellow lamp is sent	
Sensor for the temperature of the gearbox oil (SETeGO		FMI5	Current below normal or open circuit	***Activate:*** The sensor signal is above normal range ***Deactivate:*** The sensor signal is in normal range	Yellow lamp is sent	
Sensor position of the clutch (SEPoC and SEPoCINV)	**PID33**	FMI2	Data erratic, intermittent or incorrect	***Activate:*** The difference between clutch positions indicated by the sensor signal (SEPoC) and the inverted sensor signal (SEPoC INV) is to large and both signals	Yellow lamp is sent Reduced clutch performance Reduced gearbox comfort at start and marshalling Gear changes are slow	The PID 33 fault code should not be set if there is an active fault code on the clutch position sensor supply (PPID 54) The clutch position sensor has four connectors: one supply, one ground and two connectors for the sensor signal. With correct input the input voltage of the

FUNCTION	PID/SID	FMI J1587	ERROR	CONDITION	SYMPTOM	COMMENT
				is within normal range ***Deactivate:*** The difference between clutch positions indicated by the sensor signal (SEPoC) and the inverted sensor signal (SEPoC INV) is normal		sensor signal, the inverted sensor signal and the sensor supply, they will follow the nominal relation (Usepoc + Usepoc_inv) / Usepoc5V = 100%
Sensor position of the clutch (SEPoC and SEPoCINV)		FMI3	Voltage above normal or shorted high	***Activate:*** Sensor signal is short circuit to Ubatt or sensor supply, when at least one of the sensor signals is above normal range. ***Deactivate:*** No sensor signal is above normal range	Yellow lamp is sent Reduced clutch performance Reduced gearbox comfort at start and marshalling Gear changes are slow	The PID 33 fault code should not be set if there is an active fault code on the clutch position sensor supply (PPID 54)
Sensor position of the clutch (SEPoC and SEPoCINV)		FMI5	Current below normal or open circuit	***Activate:*** 1. Open circuit on any of the sensor signals is detected when: one of the sensor signals is within normal range and the other sensor signal is below normal range 2. Open circuit on ground, detected when both the sensor signals are within the normal range and the sum of the sensor signals is above a specific value ***Deactivate: No*** activation condition is no longer fulfilled	Yellow lamp is sent Reduced clutch performance Reduced gearbox comfort at start and marshalling gear changes are slow	The PID 33 fault code should not be set if there is an active fault code on the clutch position sensor supply (PPID 54)
Sensor position of the clutch (SEPoC and SEPoCINV)		FMI12	Faulty device or component	***Activate:*** Both sensor signals are below normal when: 1. Status of the sensor ASIC reports internal fault on the sensor, or 2. Short circuit to Gnd on any of the sensor signals, or 3. Open circuit	Yellow lamp is sent Reduced clutch performance Reduced gearbox comfort at start and marshalling gear changes are slow	The PID 33 fault code should not be set if there is an active fault code on the clutch position sensor supply (PPID 54)

FUNCTION	PID/SID	FMI J1587	ERROR	CONDITION	SYMPTOM	COMMENT
				on supply, or 4. Short circuit between the two sensor signals ***Deactivate:*** Both sensor signals are not below normal level		
Sensor position of the clutch (SEPoC and SEPoCINV)		FMI13	Calibration value out of range	***Activate:*** 1. The CS in NVRAM is not correct 2. The cylinder has not been calibrated ***Deactivate:*** Sensor signal has been successfully calibrated	Yellow lamp is sent Cranking is inhibited Engine can not start	The PID 33 fault code should not be set if there is an active fault code on the clutch position sensor supply (PPID 54)
Slow clutch valves low side (VAS-)	**PSID6**	FMI3	Voltage above normal or shorted high	***Activate:*** The low-side drive is short circuit to Ubatt ***Deactivate:*** The low-side drive is OK	Yellow lamp is sent Slow engagement/disengagement disabled Reduced clutch performance, especially at start and marshalling	
Slow clutch valves low side (VAS-)		FMI6	Current above normal or grounded circuit	***Activate:*** 1. The low-side drive is short circuit to Gnd and 2. There is no active fault code for short circuit to Gnd on VASE or VASD ***Deactivate: T***he low-side drive is OK	Yellow lamp is sent Slow engagement /disengagement disabled Reduced clutch performance, especially at start and marshalling	
Split engagement system	**PSID23**	FMI0	Unintentional disengagement of indirect split	***Conditions to set the fault code:*** -The split cylinder position leaves the indirect position -The split cylinder valves are inactive	Yellow lamp is sent Loss of torque	***Detailed conditions to activate/deactivate***: The following conditions must be fulfilled three times (only once if the fault code-filter is switched OFF) in a row, in order to set the fault code: (engagement of another gear will reset the count) - The split cylinder position indicates that split gear leaves the indirect position - The split cylinder valves are inactive - There is no active fault on any of the sensor for the position of the split cylinder (SEPoS) the valve for shift to direct split the valve for shift to indirect split - There is no active fault

FUNCTION	PID/SID	FMI J1587	ERROR	CONDITION	SYMPTOM	COMMENT
						code for low air pressure n*ote:* The fault will always have the state inactive. Check fault-count and last occurrence to get more information
Split engagement system		FMI1	Unintentional disengagement of direct split	***Conditions to set the fault code:*** -The split cylinder position leaves the direct position -The split cylinder valves are inactive	Yellow lamp is sent Loss of torque	***Detailed conditions to activate/deactivate***: The following conditions must be fulfilled three times (only once if the fault code-filter is switched OFF) in a row, in order to set the fault code: (engagement of another gear will reset the count) - The split cylinder position indicates that split gear leaves the direct position - The split cylinder valves are inactive - There is no active fault on any of the sensor for the position of the split cylinder (SEPoS) the valve for shift to direct split the valve for shift to indirect split - There is no active fault code for low air pressure Note: The fault will always have the state inactive. Check fault-count and last occurrence to get more information
Split engagement system		FMI2	Unintentional disengagement of neutral split	***Conditions to set the fault code:*** -The split cylinder position leaves the neutral position -The split cylinder valves are inactive	Yellow lamp is sent	***Detailed conditions to activate/deactivate***: The following conditions must be fulfilled three times (only once if the fault code-filter is switched OFF) in a row, in order to set the fault code: (engagement of another gear will reset the count) - The split cylinder position indicates that split gear leaves the neutral position - The split cylinder valves are inactive - There is no active fault on any of the sensor for the position of the split cylinder (SEPoS) the valve for shift to direct split the valve for shift to indirect split - There is no active fault code for low air pressure *Note*: The fault will always have the state inactive. Check fault-count and last occurrence to get more information

FUNCTION	PID/SID	FMI J1587	ERROR	CONDITION	SYMPTOM	COMMENT
Split engagement system		FMI11	Blocked engagement of indirect split	***Conditions to set the fault code:*** -The indirect split gear can not engage	Yellow lamp is sent Loss of torque Only direct split gears will be selected by the system for a short while. After five successful gearshifts a new attempt to use indirect split may be made	***Detailed conditions to activate/deactivate***: The following conditions must be fulfilled three times (only once if the fault code-filter is switched OFF) in a row, in order to set the fault code: - The split valve for reaching indirect split is activated for at least 0.8s - The split cylinder position sensor indicates that indirect position is not engaged - There is no active fault on any of the sensor for the position of the split cylinder (SEPoS) the valve for shift to direct split the valve for shift to indirect split - There is no active fault code for low air pressure ***The fault is deactivated if any of the following conditions are fulfilled:*** - The split cylinder position sensor indicates that indirect position is engaged - There is an active fault code on any of the sensor for the position of the split cylinder (SEPoS) the valve for shift to direct split the valve for shift to indirect split
Split engagement system		FMI12	Blocked engagement of direct split	***Conditions to set the fault code:*** -The direct split gear can not engage	Yellow lamp is sent Loss of torque Only indirect split gears will be selected by the system for a short while. After five successful gearshifts a new attempt to use direct split may be made	***Detailed conditions to activate/deactivate***: The following conditions must be fulfilled three times (only once if the fault code-filter is switched OFF) in a row, in order to set the fault code: - The split valve for reaching direct split is activated for at least 0.8s - The split cylinder position sensor indicates that direct position is not engaged - There is no active fault on any of the sensor for the position of the split cylinder (SEPoS) the valve for shift to direct split the valve for shift to indirect split - There is no active fault code for low air pressure ***The fault is deactivated if any of the following conditions are fulfilled:*** - The split cylinder position sensor indicates that direct position is engaged - There is an active fault

FUNCTION	PID/SID	FMI J1587	ERROR	CONDITION	SYMPTOM	COMMENT
						code on any of the sensor for the position of the split cylinder (SEPoS) the valve for shift to direct split the valve for shift to indirect split
Split engagement system		FMI7	Blocked engagement of neutral split	***Conditions to set the fault code:*** -The neutral split gear can not engage	Yellow lamp is sent Eco roll is not available	***Detailed conditions to activate/deactivate***: The following conditions must be fulfilled three times (only once if the fault code-filter is switched OFF) in a row, in order to set the fault code: - The split valve for reaching neutral split is activated for at least 0.8s - The split cylinder position sensor indicates that neutral position is not engaged - There is no active fault on any of the sensor for the position of the split cylinder (SEPoS) the valve for shift to direct split the valve for shift to indirect split - There is no active fault code for low air pressure ***The fault is deactivated if any of the following conditions are fulfilled:*** - The split cylinder position sensor indicates that neutral position is engaged - There is an active fault code on any of the sensor for the position of the split cylinder (SEPoS) the valve for shift to direct split the valve for shift to indirect split
TECU Power supply	**PID158**	FMI0	Data valid but above normal operational range	***Activate:*** 24V system: above 36V 12V system: above 19V ***Deactivate:*** 24V system: below 36V 12V system: below 19V	Yellow lamp is sent	
TECU Power supply		FMI1	Data valid but below normal operational range	***Activate:*** 24V system: below 17V 12V system: below 9V ***Deactivate:*** 24V system: above 17V 12V system: above 9V	Yellow lamp is sent Reduced gearbox performance	
Valve for activating the PTO number 1 (VAP1)	**PSID20**	FMI3	Voltage above normal or shorted high	***Activate***: The high side drive is short circuit to Ubatt ***Deactivate***: The high side drive is	Yellow lamp is sent The valve is activated The PTO can not be	PTO fault codes are only set if the PTO exists

FUNCTION	PID/SID	FMI J1587	ERROR	CONDITION	SYMPTOM	COMMENT
				OK	deactivated Reduced gear change comfort	
Valve for activating the PTO number 1 (VAP1)		FMI5	Current below normal or open circuit	***Activate***: The high side drive is open circuit ***Deactivate***: The high side drive is OK	Yellow lamp is sent The valve can not be activated The PTO does not work	
Valve for activating the PTO number 1 (VAP1)		FMI6	Current above normal or grounded circuit	***Activate***: The high side drive is short circuit to Gnd ***Deactivate***: The high side drive is OK	Yellow lamp is sent The valve can not be activated The PTO does not work	
Valve for activating the PTO number 2 (VAP2)	**PSID21**	FMI3	Voltage above normal or shorted high	***Activate***: The high side drive is short circuit to Ubatt ***Deactivate***: The high side drive is OK	Yellow lamp is sent The valve is activated The PTO can not be deactivated Reduced gear change comfort	
Valve for activating the PTO number 2 (VAP2)		FMI5	Current below normal or open circuit	***Activate***: The high side drive is open circuit ***Deactivate***: The high side drive is OK	Yellow lamp is sent The valve can not be activated The PTO does not work	
Valve for activating the PTO number 2 (VAP2)		FMI6	Current above normal or grounded circuit	***Activate:*** The high side drive is short circuit to Gnd ***Deactivate:*** The high side drive is OK	Yellow lamp is sent The valve can not be activated The PTO does not work	
Valve for fast disengagement of the clutch (VAFD)	**PSID3**	FMI3	Voltage above normal or shorted high	***Activate:*** 1. The high-side drive is short circuited to Ubatt and 2. there is no active fault code for short circuit to Ubatt on VAF- ***Deactivate:*** The high-side drive is OK	Yellow lamp is sent Fast engagement/disengagement disabled Reduced clutch performance Gear changes are slow	
Valve for fast disengagement of the clutch (VAFD)		FMI5	Current below normal or open circuit	***Activate:*** The high-side drive is open circuit ***Deactivate:*** The high side drive is OK	Yellow lamp is sent Fast disengagement disabled Reduced clutch performance Gear changes are slow	
Valve for fast disengagement of the clutch (VAFD)		FMI6	Current above normal or grounded circuit	***Activate:*** The high-side drive is short circuit to Gnd ***Deactivate:*** The high-side drive is OK	Yellow lamp is sent Fast disengagement disabled Reduced clutch performance	

FUNCTION	PID/SID	FMI J1587	ERROR	CONDITION	SYMPTOM	COMMENT
					Gear changes are slow	
Valve for fast engagement of the clutch (VAFE)	**PSID1**	FMI3	Voltage above normal or shorted high	***Activate:*** 1. The high-side drive is short circuited to Ubatt and, 2. there is no active fault code for short circuit to Ubatt on VAF- ***Deactivate:*** The high-side drive is OK	Yellow lamp is sent Fast engagement/disengagement disabled Reduced clutch performance Gear changes are slow	
Valve for fast engagement of the clutch (VAFE)		FMI5	Current below normal or open circuit	***Activate:*** The high-side drive is open circuit ***Deactivate:*** The high side drive is OK	Yellow lamp is sent Fast engagement disabled Reduced clutch performance Gear changes are slow	
Valve for fast engagement of the clutch (VAFE)		FMI6	Current above normal or grounded circuit	***Activate:*** The high-side drive is short circuit to Gnd ***Deactivate:*** The high-side drive is OK	Yellow lamp is sent Fast engagement disabled Reduced clutch performance Gear changes are slow	
Valve for shifting to direct split (VADS)	**SID37**	FMI3	Voltage above normal or shorted high	***Activate:*** The high side drive is short circuit to Ubatt ***Deactivate:*** The high side drive is OK	Yellow lamp is sent The valve is activated Indirect and neutral split gears are missing Automatic gear selection enters faulty gearbox mode with gear changes only at certain vehicle speeds	
Valve for shifting to direct split (VADS)		FMI5	Current below normal or open circuit	***Activate:*** The high side drive is open circuit ***Deactivate:*** The high side drive is OK	Yellow lamp is sent The valve can not be activated Split gears are missing Automatic gear selection enters faulty gearbox mode with gear changes only at certain vehicle speeds	
Valve for shifting to direct split (VADS)		FMI6	Current above normal or grounded circuit	***Activate:*** The high side drive is short circuit to Gnd ***Deactivate:*** The high side drive is OK	Yellow lamp is sent The valve can not be activated Split gears are missing Automatic gear	

FUNCTION	PID/SID	FMI J1587	ERROR	CONDITION	SYMPTOM	COMMENT
					selection enters faulty gearbox mode with gear changes only at certain vehicle speeds	
Valve for shifting to gear 1 (VAG1)	**PSID12**	FMI3	Voltage above normal or shorted high	***Activate:*** The high side drive is short circuit to Ubatt ***Deactivate:*** The high side drive is OK	Yellow lamp is sent The valve is activated Gears are missing Automatic gear selection enters faulty gearbox mode with gear changes only at certain vehicle speeds	
Valve for shifting to gear 1 (VAG1)		FMI5	Current below normal or open circuit	***Activate:*** The high side drive is open circuit ***Deactivate:*** The high side drive is OK	Yellow lamp is sent The valve can not be activated Gears are missing Automatic gear selection enters faulty gearbox mode with gear changes only at certain vehicle speeds	
Valve for shifting to gear 1 (VAG1)		FMI6	Current above normal or grounded circuit	***Activate:*** The high side drive is short circuit to Gnd ***Deactivate:*** The high side drive is OK	Yellow lamp is sent The valve can not be activated Gears are missing Automatic gear selection enters faulty gearbox mode with gear changes only at certain vehicle speeds	
Valve for shifting to gear 2 (VAG2)	**PSID14**	FMI3	Voltage above normal or shorted high	***Activate:*** The high side drive is short circuit to Ubatt ***Deactivate:*** The high side drive is OK	Yellow lamp is sent The valve can not be activated Gears are missing Automatic gear selection enters faulty gearbox mode with gear changes only at certain vehicle speeds	
Valve for shifting to gear 2 (VAG2)		FMI5	Current below normal or open circuit	***Activate:*** The high side drive is open circuit ***Deactivate:*** The high side drive is OK	Yellow lamp is sent The valve can not be activated Gears are missing Automatic gear selection enters	

FUNCTION	PID/SID	FMI J1587	ERROR	CONDITION	SYMPTOM	COMMENT
					faulty gearbox mode with gear changes only at certain vehicle speeds	
Valve for shifting to gear 2 (VAG2)		FMI6	Current above normal or grounded circuit	***Activate:*** The high side drive is short circuit to Gnd ***Deactivate:*** The high side drive is OK	Yellow lamp is sent The valve can not be activated Gears are missing Automatic gear selection enters faulty gearbox mode with gear changes only at certain vehicle speeds	
Valve for shifting to gear 3 (VAG3)	**PSID15**	FMI3	Voltage above normal or shorted high	***Activate:*** The high side drive is short circuit to Ubatt ***Deactivate:*** The high side drive is OK	Yellow lamp is sent The valve can not be activated Gears are missing Automatic gear selection enters faulty gearbox mode with gear changes only at certain vehicle speeds	
Valve for shifting to gear 3 (VAG3)		FMI5	Current below normal or open circuit	***Activate:*** The high side drive is open circuit ***Deactivate:*** The high side drive is OK	Yellow lamp is sent The valve can not be activated Gears are missing Automatic gear selection enters faulty gearbox mode with gear changes only at certain vehicle speeds	
Valve for shifting to gear 3 (VAG3)		FMI6	Current above normal or grounded circuit	***Activate:*** The high side drive is short circuit to Gnd ***Deactivate:*** The high side drive is OK	Yellow lamp is sent The valve can not be activated Gears are missing Automatic gear selection enters faulty gearbox mode with gear changes only at certain vehicle speeds	
Valve for shifting to gear reverse (VAGR)	**PSID13**	FMI3	Voltage above normal or shorted high	***Activate:*** The high side drive is short circuit to Ubatt ***Deactivate:*** The high side drive is OK	Yellow lamp is sent The valve is activated Gears are missing Automatic gear selection enters faulty gearbox	

FUNCTION	PID/SID	FMI J1587	ERROR	CONDITION	SYMPTOM	COMMENT
					mode with gear changes only at certain vehicle speeds	
Valve for shifting to gear reverse (VAGR)		FMI5	Current below normal or open circuit	***Activate:*** The high side drive is open circuit ***Deactivate:*** The high side drive is OK	Yellow lamp is sent The valve can not be activated Gears are missing Automatic gear selection enters faulty gearbox mode with gear changes only at certain vehicle speeds	
Valve for shifting to gear reverse (VAGR)		FMI6	Current above normal or grounded circuit	***Activate:*** The high side drive is short circuit to Gnd ***Deactivate:*** The high side drive is OK	Yellow lamp is sent The valve can not be activated Gears are missing Automatic gear selection enters faulty gearbox mode with gear changes only at certain vehicle speeds	
Valve for shifting to high range (VAHR)	**SID35**	FMI3	Voltage above normal or shorted high	***Activate:*** The high side drive is short circuit to Ubatt ***Deactivate:*** The high side drive is OK	Yellow lamp is sent The valve is activated Low range gears are missing Automatic gear selection enters faulty gearbox mode with gear changes only at certain vehicle speeds	
Valve for shifting to high range (VAHR)		FMI5	Current below normal or open circuit	***Activate:*** The high side drive is Open circuit ***Deactivate:*** The high side drive is OK	Yellow lamp is sent The valve can not be activated Range gears are missing Automatic gear selection enters faulty gearbox mode with gear changes only at certain vehicle speeds	
Valve for shifting to high range (VAHR)		FMI6	Current above normal or grounded circuit	***Activate:*** The high side drive is short circuit to Gnd ***Deactivate:*** The high side drive is OK	Yellow lamp is sent The valve can not be activated Range gears are missing Automatic gear selection enters faulty gearbox mode with gear	

FUNCTION	PID/SID	FMI J1587	ERROR	CONDITION	SYMPTOM	COMMENT
					changes only at certain vehicle speeds	
Valve for shifting to indirect split (VAIDS)	**SID38**	FMI3	Voltage above normal or shorted high	***Activate:*** The high side drive is short circuit to Ubatt ***Deactivate:*** The high side drive is OK	Yellow lamp is sent The valve is activated Direct and neutral split gears are missing Automatic gear selection enters faulty gearbox mode with gear changes only at certain vehicle speeds	
Valve for shifting to indirect split (VAIDS)		FMI5	Current below normal or open circuit	***Activate:*** The high side drive is open circuit ***Deactivate:*** The high side drive is OK	Yellow lamp is sent The valve can not be activated Split gears are missing Automatic gear selection enters faulty gearbox mode with gear changes only at certain vehicle speeds	
Valve for shifting to indirect split (VAIDS)		FMI6	Current above normal or grounded circuit	***Activate:*** The high side drive is short circuit to Gnd ***Deactivate:*** The high side drive is OK	Yellow lamp is sent The valve can not be activated Split gears are missing Automatic gear selection enters faulty gearbox mode with gear changes only at certain vehicle speeds	
Valve for shifting to low range (VALR)	**SID36**	FMI3	Voltage above normal or shorted high	***Activate:*** The high side drive is short circuit to Ubatt ***Deactivate:*** The high side drive is OK	Yellow lamp is sent The valve is activated High range gears are missing Automatic gear selection enters faulty gearbox mode with gear changes only at certain vehicle speeds	
Valve for shifting to low range (VALR)		FMI5	Current below normal or open circuit	***Activate:*** The high side drive is open circuit ***Deactivate:*** The high side drive is OK	Yellow lamp is sent The valve can not be activated Range gears are missing Automatic gear selection enters	

FUNCTION	PID/SID	FMI J1587	ERROR	CONDITION	SYMPTOM	COMMENT
					faulty gearbox mode with gear changes only at certain vehicle speeds	
Valve for shifting to low range (VALR)		FMI6	Current above normal or grounded circuit	***Activate:*** The high side drive is short circuit to Gnd ***Deactivate:*** The high side drive is OK	Yellow lamp is sent The valve can not be activated Range gears are missing Automatic gear selection enters faulty gearbox mode with gear changes only at certain vehicle speeds	
Valve for slow disengage-ment of the clutch (VASD)	**PSID4**	FMI3	Voltage above normal or shorted high	***Activate:*** 1. The high-side drive is short circuit to Ubatt and 2. There is no active fault code for short circuit to Ubatt on VAS- ***Deactivate:*** The high-side drive is OK	Yellow lamp is sent Slow engagement/dis-engagement disabled Reduced clutch performance, especially at start and marshalling	
Valve for slow disengage-ment of the clutch (VASD)		FMI5	Current below normal or open circuit	***Activate:*** The high-side drive is open circuit ***Deactivate:*** The high-side drive is OK	Yellow lamp is sent Slow disengagement disabled Reduced clutch performance	
Valve for slow disengage-ment of the clutch (VASD)		FMI6	Current above normal or grounded circuit	***Activate:*** The high-side drive is short circuit to Gnd ***Deactivate: T***he high-side drive is OK	Yellow lamp is sent Slow disengagement disabled Reduced clutch performance	
Valve for slow engagement of the clutch (VASE)	**PSID2**	FMI3	Voltage above normal or shorted high	***Activate:*** 1. The high-side drive is short circuit to Ubatt and 2. There is no active fault code for short circuit to Ubatt on VAS- ***Deactivate:*** The high-side drive is OK	Yellow lamp is sent Slow engagement/dis-engagement disabled Reduced clutch performance, especially at start and marshalling	
Valve for slow engagement of the clutch (VASE)		FMI5	Current below normal or open circuit	***Activate:*** The high-side drive is open circuit ***Deactivate:*** The high-side drive is OK	Yellow lamp is sent Slow engagement disabled Reduced clutch performance, especially at start and marshalling	

FUNCTION	PID/SID	FMI J1587	ERROR	CONDITION	SYMPTOM	COMMENT
Valve for slow engagement of the clutch (VASE)		FMI6	Current above normal or grounded circuit	***Activate:*** The high-side drive is short circuit to Gnd ***Deactivate: T***he high-side drive is OK	Yellow lamp is sent Slow engagement disabled Reduced clutch performance, especially at start and marshalling	
Valve for the gearbox brake (VAGB)	**PSID22**	FMI3	Voltage above normal or shorted high	***Activate:*** The high side drive is short circuit to Ubatt ***Deactivate:*** The high side drive is OK	Red lamp is sent The valve and the brake are activated The gearbox will be damaged if the vehicle drives The prop shaft has to be removed to move the vehicle	
Valve for the gearbox brake (VAGB)		FMI5	Current below normal or open circuit	***Activate:*** The high side drive is open circuit ***Deactivate:*** The high side drive is OK	Yellow lamp is sent The valve can not be activated Shifting to the start gear takes long time	
Valve for the gearbox brake (VAGB)		FMI6	Current above normal or grounded circuit	***Activate:*** The high side drive is short circuit to Gnd ***Deactivate:*** The high side drive is OK	Yellow lamp is sent The valve can not be activated Shifting to the start gear takes long time	

10. VOLVO I-SHIFT TRANSMISSION GSECU FAULT CODES

PID/PPID SID/PSID	FMI	LAMP	CONTENT	TEXT	COMMENT	CONSEQUENCES
SID231	2	None	SAE J1939 Data Link	-	-	Redundancy on J1587
SID237	3	CHECK	Start enable device	Check Gear Selector System at next stop	Only for EMS1.xx vehicles	Start relay not working
SID240	2	CHECK	Program memory	Gear Selector System failure	Boot	Not possible to engage gear
SID250	9	None	SAE J1708 /J1587 data link	-	-	-
SID253	2	CHECK	Program memory	Gear Selector System failure	-	Not possible to engage gear
SID254	12	CHECK	Controller #1	Gear Selector System failure	-	Not possible to engage gear
PSID9	12	CHECK	Gear level position	Check Gear Selector System	-	Not possible to engage/change gear

PID/PPID SID/PSID	FMI	LAMP	CONTENT	TEXT	COMMENT	CONSEQUENCES
			sensors	at next stop		
PSID36	7	CHECK	Output actuator (REPS)	Check Gear Selector System at next stop	-	Fault displayed after ignition OFF. Risk of battery discharge if main circuit breaker is not opened when vehicle is not used
PSID36	12		Output actuator (REPS)	Check Gear Selector System at next stop	-	Gearbox not supplied
PSID42	2	None	Ignition signals	-	-	Power supply always on
PSID200	9	None	Data Link, MID128	Check Gear Selector System at next stop	Only for AMT-C, Boot	Affects RT only (can be sent for VT)
PSID201	9	None	Data Link, MID144	Check Gear Selector System at next stop	Only for AMT-C, Boot	Affects RT only (can be sent for VT)
PSID205	9	None	Data Link, MID130	Check Gear Selector System at next stop	Boot	Affects RT only (can be sent for VT)
PSID214	9	None	Data Link, MID249	-	Only when second gear selector is installed, Boot	Not possible to switch to/from secondary gear lever

11. SPECIFICATIONS

ALLISON AUTOMATIC TRANSMISSION WITH OR WITHOUT RETARDER

Over-the-road coaches. Commercial use

Allison B500

Gross input power (maximum).....500 HP (335 kW)
Gross input torque (maximum) .....1525 Lbf-ft (2068 Nm)
Rated input speed (minimum-maximum) .....1600-2300 rpm

X3-45 VIP, H3-45 VIP motorhomes. Private use

Allison MH4000

Gross input power (maximum).....525 HP (392 kW)
Gross input torque (maximum) .....1650 Lbf-ft (2237 Nm)
Rated input speed (minimum-maximum) .....1600-2300 rpm

Mounting:

Engine..... SAE #1 flywheel housing, flex disk drive

Torque converter:

Type .....One stage, three element, polyphase
Stall torque ratio.....TC 551-1.8
Lockup clutch with torsional damper.....Integral/standard

Gearing:

Type ..... Patented, constant mesh, helical, planetary

Ratio:
First 3.51:1
Second.....1.91:1
Third.....1.43:1
Fourth.....1.00:1
Fifth 0.74:1
Sixth 0.64:1
Reverse.....4.80:1

Total coverage[3]:

6 speed 5.48:1

- **Gear ratios do not include torque converter multiplication.**

Oil System:

Oil type.....TRANSYND, TES295, TES389
Capacity (excluding external circuits).....Initial fill 47 US qts (45 liters)
Oil change.....24 US qts (23 liters)
Oil change (with retarder).....27.6 US qts (26.5 liters)

Oil Filters:

Make ..... Allison Transmission
Type .....Disposable cartridge

[3] Total coverage is determined by dividing the highest gear ratio by the lowest gear ratio. Total coverage expresses the transmission gear ratio versatility. Transmissions with a larger total coverage number have a wider variety of available ratios.

VOLVO I-SHIFT TRANSMISSION

Oil System:
Oil change.....16 US qts (15 liters)

Oil Filter:
Make .....Volvo
Type .....Disposable cartridge

CONTENTS

1. PROPELLER SHAFT 2

1.1 DESCRIPTION 2

2. INSPECTION, LUBRICATION, REMOVAL AND INSTALLATION 2

3. EXPLANATION OF COMMON DAMAGES 4

4. SPECIFICATIONS 5

1. PROPELLER SHAFT

1.1 DESCRIPTION

The propeller shaft transmits power from the transmission to the differential (Figure 4). Refer to paragraph *"6. SPECIFICATIONS"* at the end of this section for propeller shaft length. The propeller shaft is Dana Spicer Life Series SPL250 type with tubular shafts. It is provided with two heavy-duty universal joints (Figure 4).

The propeller shaft has a half round end yoke at each end. The slip yoke is connected to the differential by a half round end yoke with two needle bearings.

The other extremity (tube yoke assembly) is connected to the transmission by a half round end yoke with two needle bearings (Allison transmission) or a flange yoke and companion flange with two needle bearings (I-Shift Transmission).

Furthermore, a slip joint on the propeller shaft compensates for variations in distance between the transmission and the differential, or between the output retarder (optional on the automatic transmission) and differential.

The rise and fall of the drive axle bring about these variations as the vehicle passes over uneven surfaces. The slip joint also eases removal of the transmission or the drive axle.

For further information, please consult **Spicer Life Series Driveshafts Service Manual DSSM-0100** included on your Technical Publications USB flash drive.

WARNING

DO NOT reuse bearing retainer bolts, stamped straps and stamped strap bolts.

DO NOT reuse spring tabs and spring tab bolts.

FIGURE 1: STRAPS (stamped)

FIGURE 2: BEARING RETAINER (cold formed)

FIGURE 3: COLD FORMED BEARING RETAINER AND BOLTS AS USED ON PREVOST VEHICLES

DO NOT reuse **cold formed bearing retainers** and **bolts**. Reuse of bearing retainer and bolts can cause driveline failure, which can result in separation of the driveline from the vehicle.

2. INSPECTION, LUBRICATION, REMOVAL AND INSTALLATION

Please, refer to **Spicer Driveshaft's Service Manual DSSM-0100** for further details.

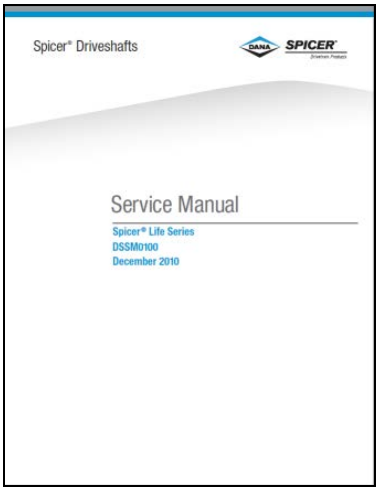

MAINTENANCE

Perform "Inspection Procedures" as per *Spicer Life Series Driveshafts Service Manual DSSM-0100* at the intervals specified by the Lubrication And Servicing Schedule in Section 24: LUBRICATION & SERVICING.

NOTE

Repair kits are available for overhaul of the propeller shaft assembly. Refer to Parts Manual, Section 9.

MAINTENANCE

Lubricate propeller shaft universal joints at the intervals specified by the Lubrication And Servicing Schedule in Section 24: LUBRICATION & SERVICING.

Apply grease gun pressure to the lube fittings (1 grease fitting on each universal joint). Use a good quality lithium-base grease such as: NLGI No.2 E.P. Grease (suitable for most temperatures). Refer to Spicer Driveshaft's Service Manual DSSM-0100 for further details.

NOTE

Do not assume that bearing cavities have been filled with new grease unless it has expelled around all seals.

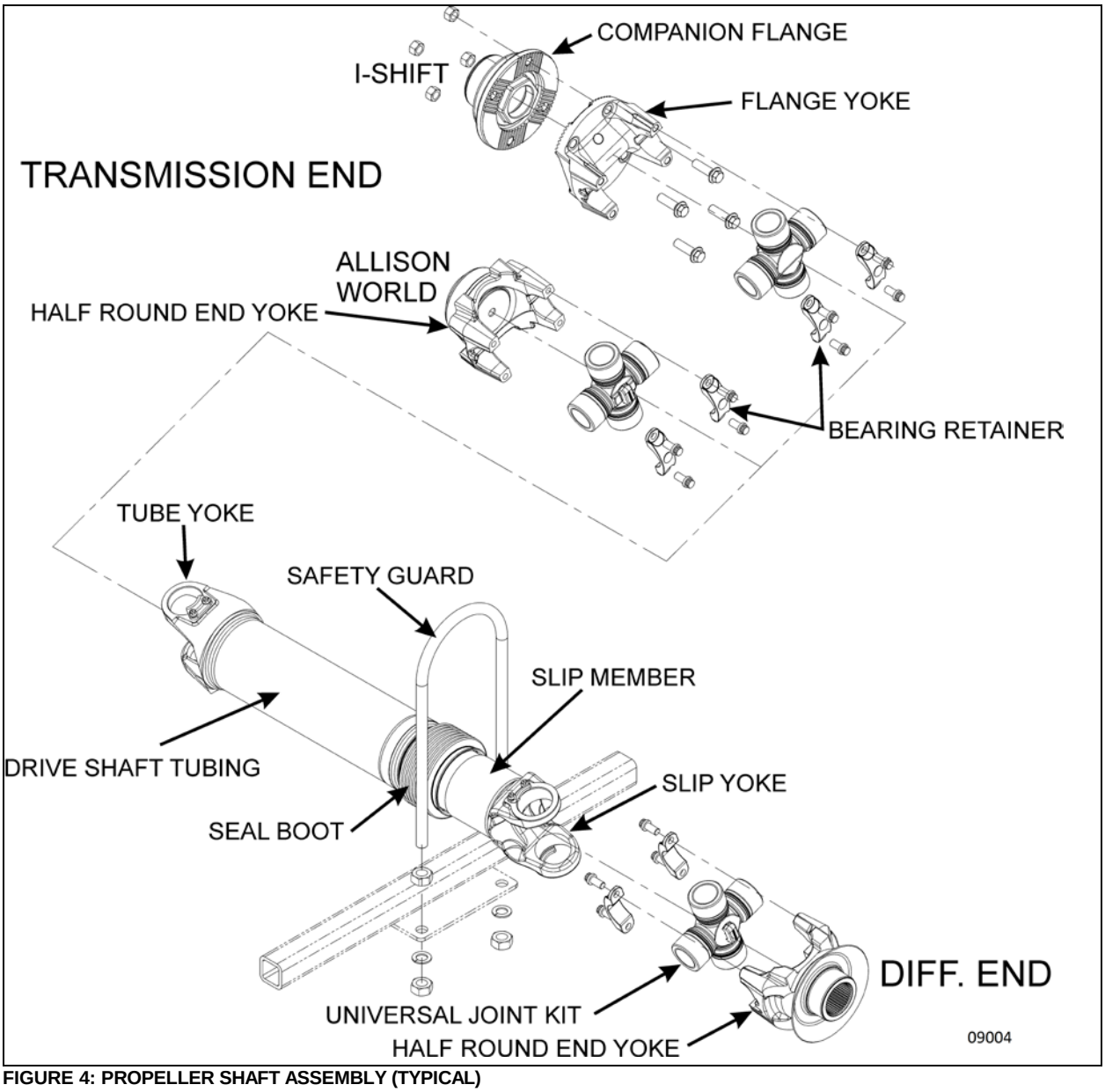

FIGURE 4: PROPELLER SHAFT ASSEMBLY (TYPICAL)

3. EXPLANATION OF COMMON DAMAGES

1. Cracks: Stress lines due to metal fatigue. Severe and numerous cracks will weaken the metal until it breaks.

2. Galling: Scraping off of metal or metal displacement due to friction between surfaces. This is commonly found on trunnion ends.

3. Spalling (surface fatigue): Breaking off of chips, scales, or flakes of metal due to fatigue rather than wear. It is usually found on splines and U-joint bearings.

4. Pitting: Small pits or craters in metal surfaces due to corrosion. If excessive, pitting can lead to surface wear and eventual failure.

5. Brinelling: Surface wear failure due to the wearing of grooves in metal. It is often caused by improper installation procedures. Do not confuse the polishing of a surface (false brinelling), where no structural damage occurs, with actual brinelling.

6. Structural Overloading: Failure caused by a load greater than the component can stand. A structural overload may cause propeller shaft tubing to twist under strain or it may cause cracks or breaks in U-joints and spline plugs.

4. SPECIFICATIONS

PROPELLER SHAFT

H3 Series

Make ..... Dana-Spicer Inc.
Series SPL250
Length (with Allison transmission) ..... 925 mm
Length (with I-Shift transmission) ..... 820 mm

X3 Series

Make ..... Dana-Spicer Inc.
Series SPL250
Length (with Allison transmission) ..... 485 mm
Length (with I-Shift transmission) ..... 373 mm

CONTENTS

1. TORQUE TABLE 2

1.1 FRONT I-BEAM AXLE AND RELATED COMPONENTS 4
1.2 FRONT I-BEAM AXLE HUB, ROTOR AND BRAKES 13

2. DESCRIPTION 18

2.1 REFERENCE MANUALS 22

3. LUBRICATION 32

4. MAINTENANCE 35

5. REMOVAL AND REPLACEMENT 38

5.1 REMOVAL 39
5.2 REPLACEMENT 46

6. SERVICE INSTRUCTIONS FOR STEER AXLE 47

6.1 STEERING KNUCKLE KINGPIN INSPECTION 47
6.1.1 Checking Lateral Slackness 50
6.1.2 Checking Vertical Slackness 53

7. FRONT WHEEL ALIGNMENT 55

7.1 INSPECTION BEFORE ALIGNMENT 57
7.2 MINOR FRONT WHEEL ALIGNMENT 61
7.3 MAJOR FRONT WHEEL ALIGNMENT 63
7.4 TURNING ANGLE ADJUSTMENT 66
7.4.1 R.H. Turn Adjustment 67
7.4.2 L.H. Turn Adjustment 71
7.5 HYDRAULIC STOP 75
7.6 FRONT WHEEL CAMBER 77
7.6.1 Camber Check 79
7.7 FRONT AXLE CASTER 81
7.8 FRONT WHEEL TOE-IN 86
7.8.1 Inspection and Adjustment 91

8. TROUBLESHOOTING 99

9. SPECIFICATIONS 106

1. TORQUE TABLE

The following tables list the tightening torques requiring a specific torque value. When no torque specifications are indicated, use the Standard Torque Specifications table found in Section 00: General Information of the Maintenance Manual.

For other torque specifications, refer to Dana manuals listed in paragraph 2.1 reference manuals in this section.

1.1 FRONT I-BEAM AXLE AND RELATED COMPONENTS

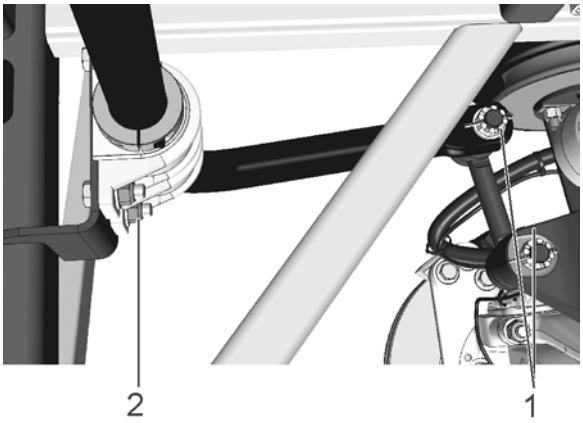

16187

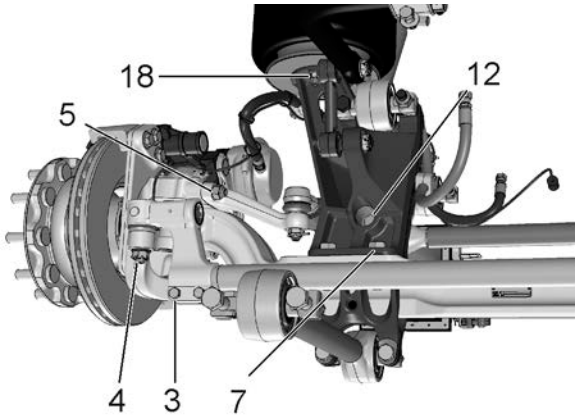

16188

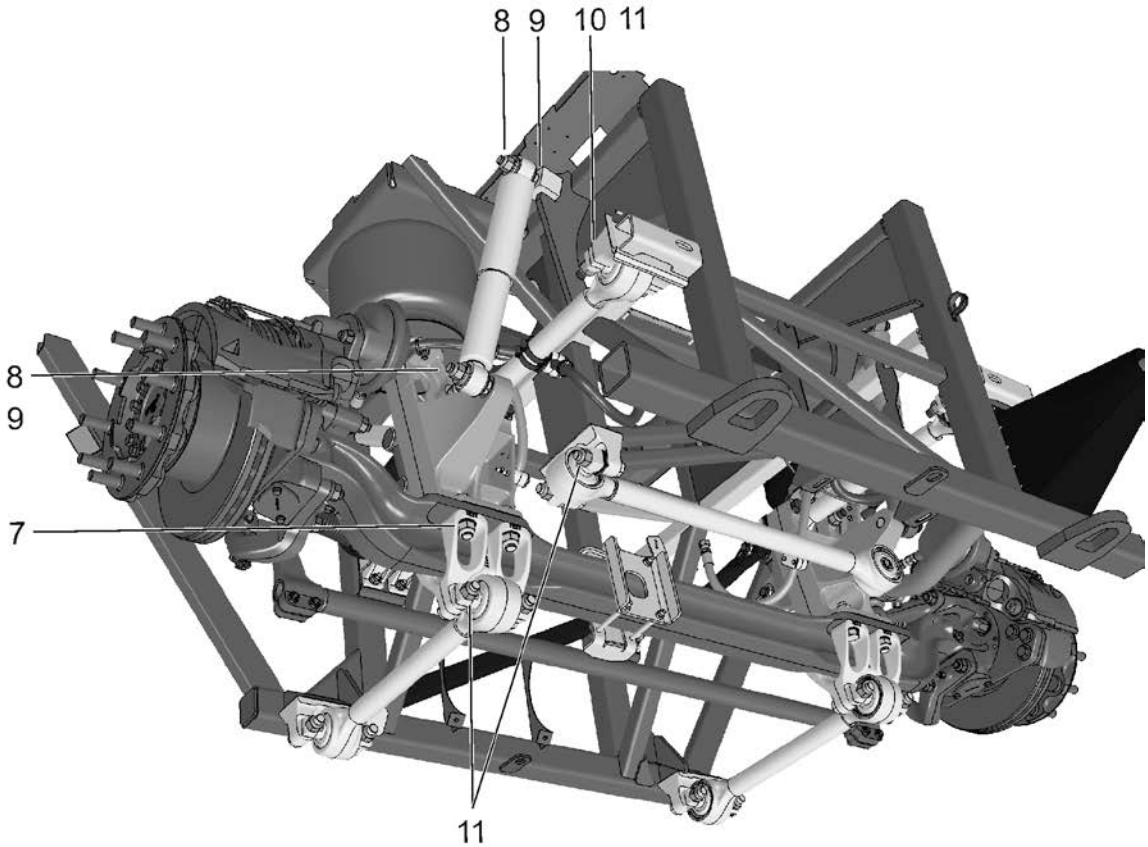

16192

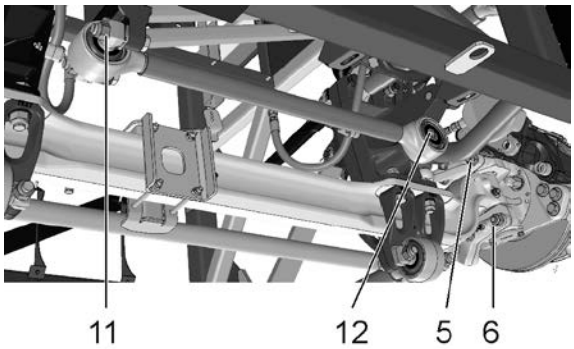

16191

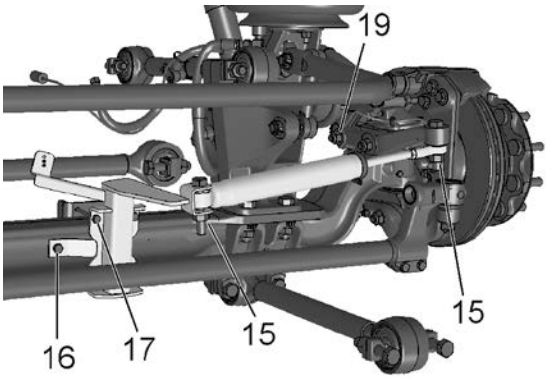

16193

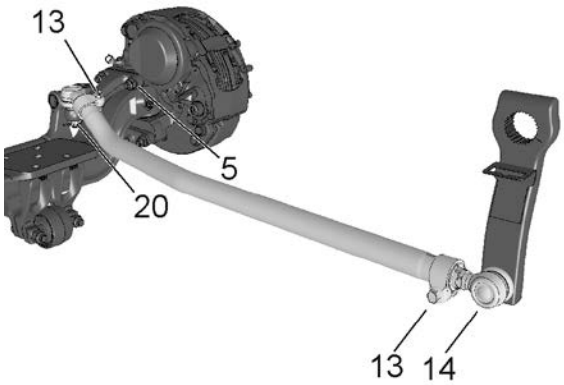

16194_1

FRONT I-BEAM AXLE			
No	DESCRIPTION	QTY	TORQUE (dry)
1	Sway bar link, upper and lower nuts	4	165-200 lb-ft (224-271 Nm)
2	Sway bar bushing collars (front suspension)	8	80-100 lb-ft (108-136 Nm)
3	Tie rod end clamp bolts	4	65-75 lb-ft (88-102 Nm)
4	Tie rod end ball pin nuts	2	150-200 lb-ft (203-271 Nm)
5	Steering arm stud nuts	2	285-315 lb-ft (386-427 Nm)
6	Tie rod arm stud nuts	4	285-315 lb-ft (386-427 Nm)
7	I-beam axle mount nuts	8	230-280 lb-ft (312-380 Nm)
8	Shock absorber upper & lower mounting nuts	2	99-121 lb-ft (134-164 Nm)
9	Shock absorber pins, upper & lower	2	350-400 lb-ft (475-542 Nm)
10	Radius rod retaining studs	4	90-110 lb-ft (122-149 Nm)
11	Radius rod retaining nuts	18	225-255 lb-ft (305-346 Nm)
12	Transverse radius rod taper pin screw	1	206 lb-ft (279 Nm)
13	Drag link clamp bolts	2	118-133 lb-ft (160-180 Nm)
14	Drag link ball joint stud nut, fore	1	165-236 lb-ft (224-320 Nm)
15	Steering damper nuts	2	100-120 lb-ft (136-163 Nm)
16	Steering damper bracket bolt	1	39-45 lb-ft (53-61 Nm)
17	Steering damper bracket nuts	4	30-36 lb-ft (41-49 Nm)
18	Air spring nut	4	25 lb-ft (34 Nm)
19	Steering damper arm nuts	2	285-315 lb-ft (386-427 Nm)
20	Drag link ball joint stud nut, aft	1	140-200 lb-ft (190-271 Nm)

1.2 FRONT I-BEAM AXLE HUB, ROTOR AND BRAKES

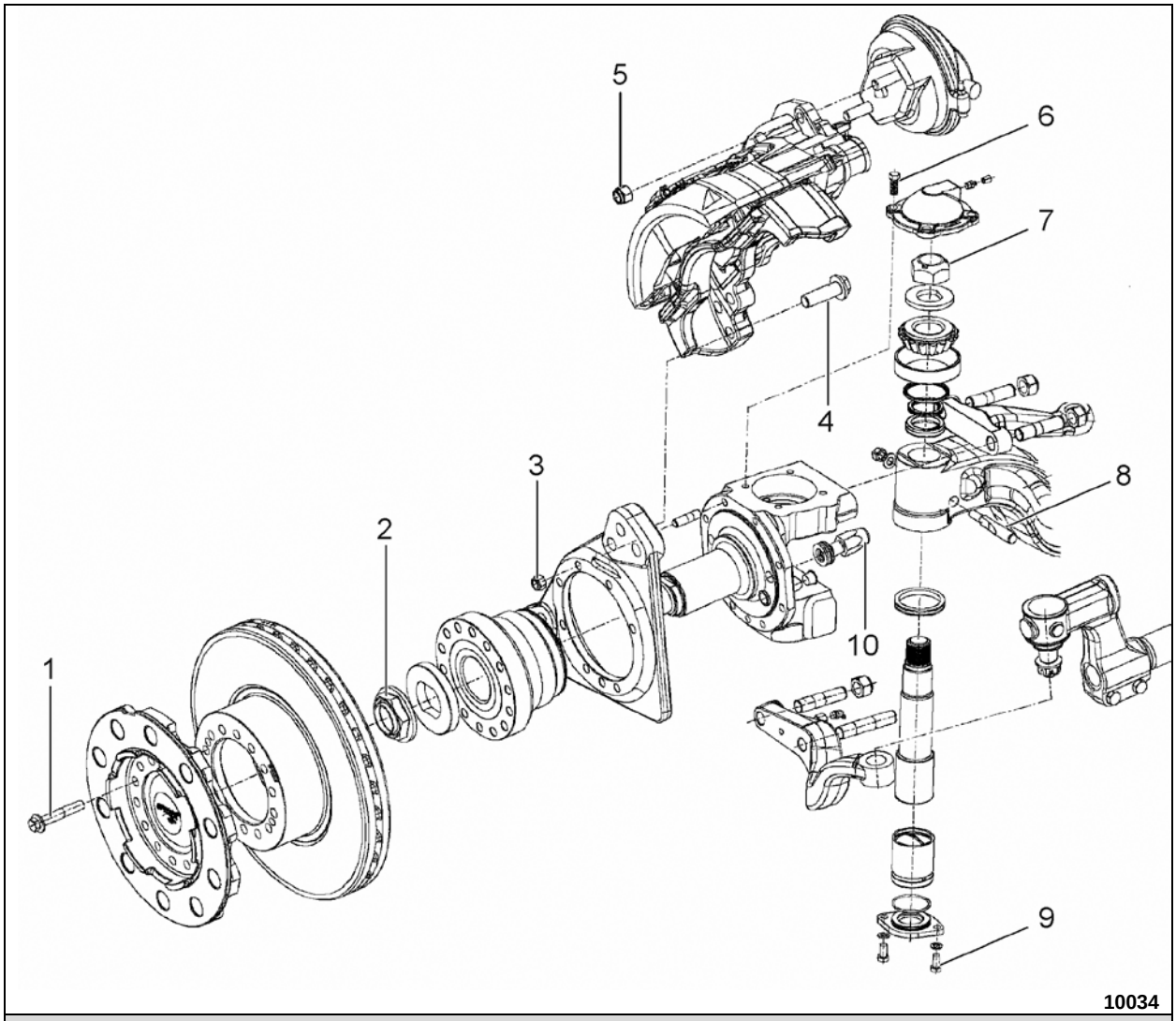

HUB, ROTOR AND BRAKE			
No	DESCRIPTION	QTY	TORQUE (dry)
1	Hub Flanged Bolt	28	174-192 lb-ft (236-260 Nm)
2	Stake Hub Nut	2	575-626 lb-ft (780-849 Nm)
3	Caliper Bracket Nut – Self Lock	16	85-103 lb-ft (115-140 Nm)
4	Brake Caliper Mounting – Bolt	12	433-479 lb-ft (587-649 Nm)
5	Brake Chamber Nut – Self Lock	4	133-155 lb-ft (180-210 Nm)
6	Kingpin cover Screw	8	51-62 lb-ft (69-84 Nm)
7	Kingpin Nut – Self Lock	2	500-700 lb-ft (678-949 Nm)
8	Draw key, Nut	2	51-62 lb-ft (69-84 Nm)
9	Kingpin lower cover Screw	4	26-32 lb-ft (35-43 Nm)
10	Back & Front Lock - Stop Bolt	3	85-103 lb-ft (115-140 Nm)

2. DESCRIPTION

The Dana Spicer S84U front axle is of the ''Reverse Elliot'' type. The front axle consists of a girder section beam with knuckles. Each knuckle is carried on a parallel king pin, with a steep angle taper roller bearing at its top and a plain phosphor bronze bush at bottom.

The unitized hub bearings used on the NDS range of axles, are non-serviceable items. Bearings are pre-adjusted, lubricated and have seals fitted as part of the manufacturing process. The bearings are greased for life and there is no need or facility for re-lubrication.

Brakes are manufactured by KNORR-BREMSE.

Steering ball joints with hardened balls and rubbing pads incorporate compression springs which automatically take up any wear.

The tie rod simplifies toe-in adjustment. The maximum turning angle is set through stop screws installed on the inner side of the knuckle.

Steering stabilizer (damper) and steering drag link which are mounted on the front axle are described further in Section 14: STEERING of this manual.

2.1 REFERENCE MANUALS

Additional information is found in the following manuals included on your vehicle Technical Publications USB flash drive:

For kingpin rework:

Dana Parts & Service Instructions S84U Steer Axle KING PIN REWORK_ Manual NO 1985 B iss A

For hub bearing rework:

Dana Parts & Service Instructions S84U Steer Axle HUB BEARING REWORK_ Manual NO 1963 B iss A

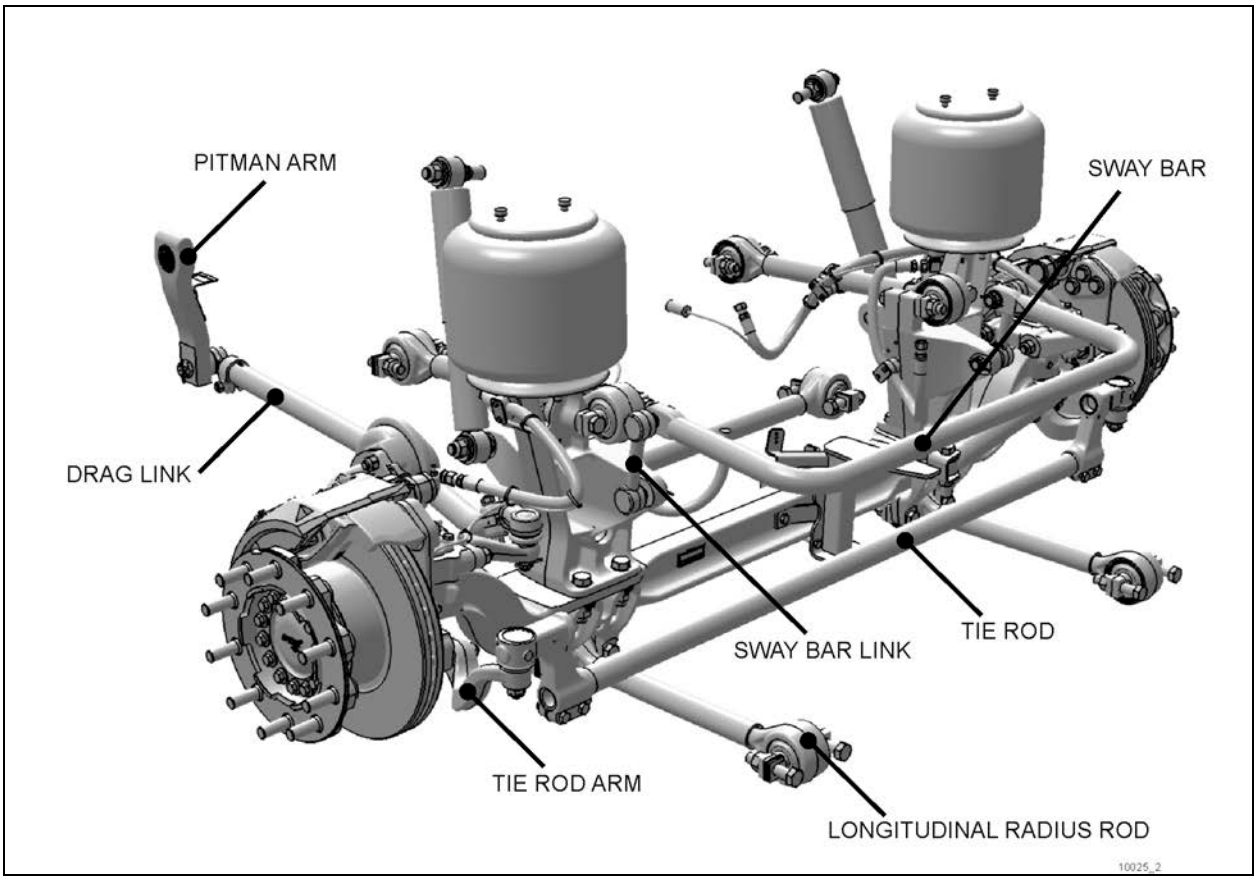

FIGURE 1: FRONT AXLE ASSEMBLY

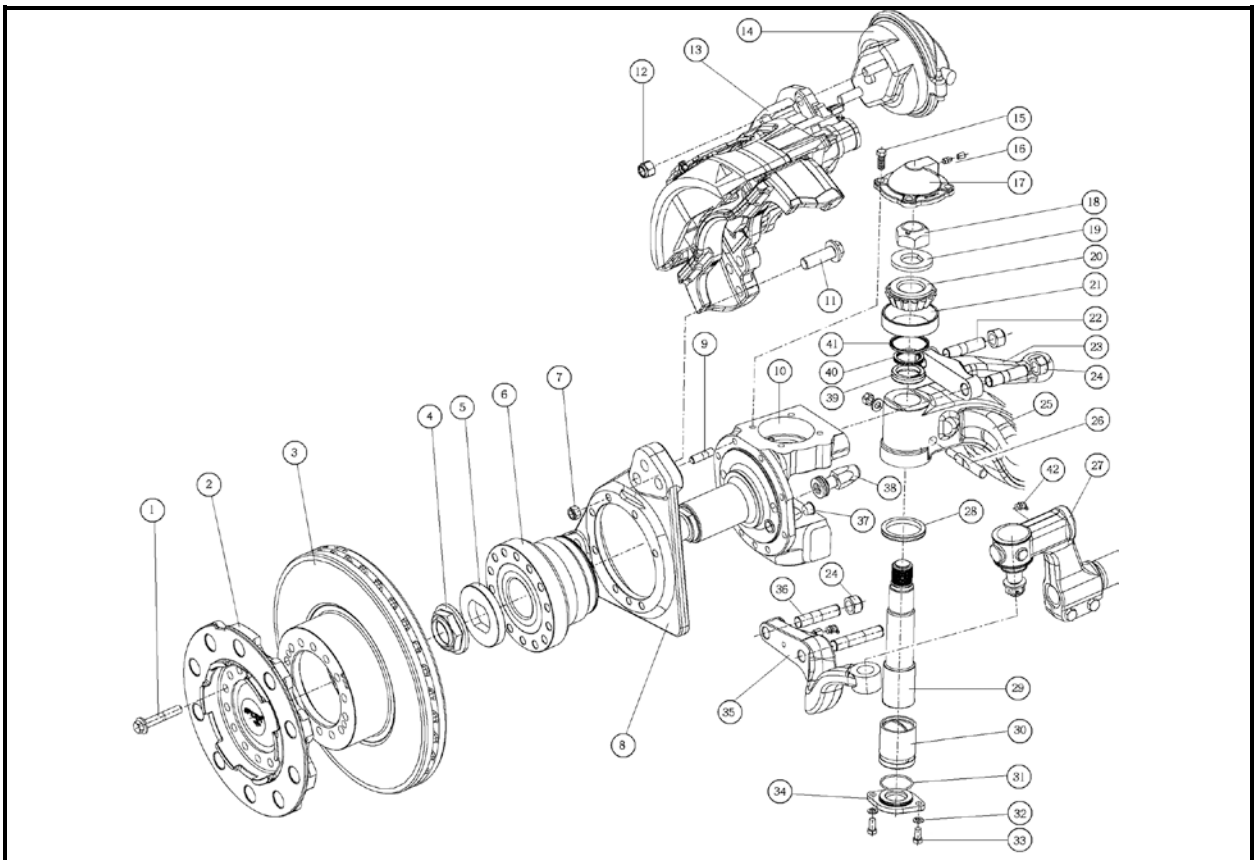

TYPICAL S84U AXLE

ITEM	DESCRIPTION	QTY	ITEM	DESCRIPTION	QTY
1	Flanged Bolt	28	26	Draw key, Nut, Washer	2
2	Hub	2	27	Tie Rod End	2
3	Brake Disc	2	28	V" Ring Seal	2
4	Stake Hub Nut	2	29	Kingpin	2
5	Collet Washer	2	30	Kingpin - Bushing	2
6	Hub Bearing	2	31	O-Ring Seal	2
7	Nut – Self Lock	16	32	Washer	4
8	Brake Mounting Bracket	2	33	Screw	4
9	Stud	16	34	Cap - Knuckle Bottom	2
10	Knuckle	2	35	Bottom Steering Lever	2
11	Brake Fixing – Bolt	12	36	Bottom Steering Lever - Stud	4
12	Nut – Self Lock	4	37	ABS Sensor - Bush	2
13	Brake	1	38	Back Lock - Stop Bolt	2
14	Brake Chamber	2		Front Lock - Stop Bolt	1
15	Screw	8	39	Sleeve - Knuckle Bearing	2
16	Grease Fitting	4	40	Shim .005"	8
17	Cap - Knuckle Top	2		Shim .010"	8
18	Nut – Self Lock	2		Shim .015"	8
19	Washer	2		Shim .008"	4
20	Bearing Cone	2		Shim .006"	2
21	Bearing Cup	2	41	Oil Seal	2
22	Steering Lever - Stud	4	42	Grease Fitting	2
23	Steering Lever	2			
24	Nut - Self Lock	4			
25	Axle, I-Beam	1			

3. LUBRICATION

MAINTENANCE

Knuckle pins are provided with grease fittings for pressure lubrication. These grease fittings should be serviced at the intervals specified by the Lubrication And Servicing Schedule in Section 24: LUBRICATION & SERVICING.

Good quality lithium-base roller bearing mineral grease NLGI No.1 and 2 like Shell Retinax LX are recommended.

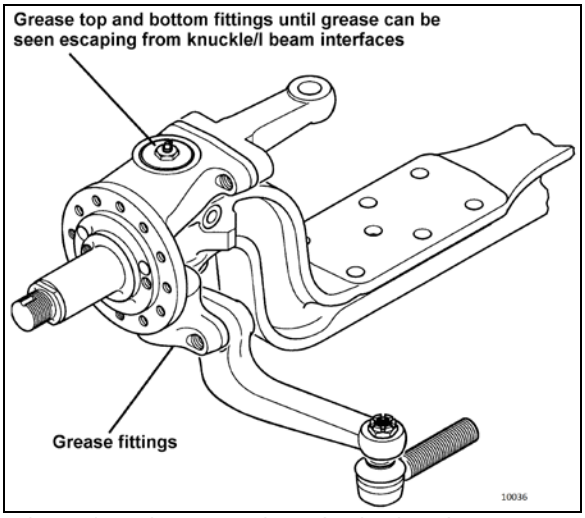

FIGURE 2: FRONT AXLE GREASING POINTS

4. MAINTENANCE

A periodic inspection of the front axle assembly should be made to check that all bolts are tight, and that no damage and distortion have taken place. Suspension support stud nuts, U-bolt nuts, tie rod arms, steering arm nuts and stop screws should be checked and tightened, as required, to the torque specifications given at the end of this section. Also check the condition of the steering knuckle pins and bushings. In case of excessive looseness, the bushings and pins should be replaced.

Any looseness in the steering linkage, under normal steering loads, is sufficient cause to immediately check all pivot points for wear, regardless of accumulated mileage. Steering linkage pivot points should be checked each time the front axle assembly is lubricated. Any looseness can be visually detected while rotating the steering wheel in both directions.

Steering knuckles, knuckle pins and bushings can be overhauled or replaced without removing the axle from the vehicle. However, if extensive overhaul work is necessary, the axle assembly should be removed.

CAUTION

Should removal of a locking device be required when undergoing repairs, disassembly or adjustments, always replace with a new one.

5. REMOVAL AND REPLACEMENT

The following procedure deals with the removal of the front axle assembly. The method used to support the axle assembly and suspension components during removal and disassembly depends upon local conditions and available equipment.

5.1 REMOVAL

1. Raise the vehicle by its jacking points on the body (see Section 18, *"Body"* under heading 34; Vehicle Jacking Points) until vehicle body is approximately 20 inches (508 mm) from the floor. Place jack stands under frame. Remove the wheels (if required, refer to Section 13, *"Wheels, Hubs and Tires"*).

CAUTION

Use only the recommended jacking points as outlined in section 18 "Body".

2. Exhaust compressed air from the air supply system by opening the drain valve of each reservoir.
3. Install jacks under axle jacking points to support the axle weight.

WARNING

To help prevent injury caused by the axle rolling off the jacks, these should be equipped with U-adapters, or similar precautions must be taken.

4. Disconnect the steering drag link from the steering arm.
5. Remove the ABS sensors from their location in hubs (if applicable).
6. Disconnect the height control valve link from its support on the axle.

7. Disconnect air lines from front brake chambers, and cover line ends and fittings to prevent the entry of foreign matter.

CAUTION

Position the air lines and electric wires so they will not be damaged while removing the front axle assembly.

8. Proceed with steps a, b and c, while referring to Section 16: *"SUSPENSION".*
   a) Disconnect sway bar links from axle brackets.
   b) Remove shock absorbers.
   c) Disconnect five radius rods: one transversal and two longitudinal from subframe, and two upper rods from axle.
9. Remove the bolts and nuts fixing the axle to the left-hand and right-hand side air bellows mounting supports.
10. Using the jacks, slowly lower the axle assembly, and carefully pull away from underneath vehicle.

5.2 REPLACEMENT

Reverse front axle "*Removal*" procedure. Ensure cleanliness of air bellows support mounting plates.

NOTE

Refer to Section 16, "Suspension", Section 14, "Steering" and to paragraph 8 "Specifications" at the end of this section for applicable checks and recommended tightening torques.

6. SERVICE INSTRUCTIONS FOR STEER AXLE

6.1 STEERING KNUCKLE KINGPIN INSPECTION

MAINTENANCE

An inspection should be made at the intervals specified by the Lubrication And Servicing Schedule in Section 24: LUBRICATION & SERVICING.

Check permissible slackness in the kingpins as follows:

Aspects to be considered are:

- **Lateral slackness**
- **Vertical slackness**

NOTE

Before commencing checks, apply parking brake, raise wheels off ground and support axle on stands.

6.1.1 Checking Lateral Slackness

Following regular and thorough greasing practices will maximise bushing life. This procedure measures the upper bearing & lower bushing wear due to side and vertical loading. While this is being carried out, the brake must be applied.

1. Place a set-square with its stock on ground and its blade against tire wall.
2. Place a mark on the ground to indicate position of stock end.
3. Insert a lever through bottom cut-out of wheel and lever it upwards thus moving set-square outboard.
4. Mark the changed position of the stock end.
5. Maximum allowable stock displacement (for 22.5" wheels) is **0.315 in (8mm)**.
6. If displacement exceeds stated allowance then need for bushing / bearing attention and possible renewal, is in evidence.

NOTE

To avoid inaccurate measurements, be careful not to let the knuckle turn while moving assembly in and out. Applying brakes will help lock wheel assembly.

6.1.2 Checking Vertical Slackness

1. This is measured by a dial indicator anchored to axle beam and having its pointer placed vertical against knuckle top.
2. Place a jack against underside of knuckle and, while applying a lifting force, observe any movement on indicator dial.
3. **If vertical movement is evident and it exceeds 0.030" (0.76mm)** then readjustment of knuckle is required by adjusting thickness of bearing adjusting shims. In this case, refer to:

Dana Parts & Service Instructions S84U Steer Axle KING PIN REWORK_ Manual NO 1985 B iss A.

7. FRONT WHEEL ALIGNMENT

Correct front wheel alignment must be maintained for steering comfort and satisfactory tire life. Road shocks and vibrations, as well as normal stress and strains on the front-end system can, under normal operating conditions, result in loss of front wheel alignment.

Check the front wheel alignment when the following occurs:

1. Every 200,000 miles (320 000 km) or 24 months (normal maintenance);
2. When the vehicle does not steer correctly; or
3. To correct a tire wear condition.

There are two types of front wheel alignment: **minor alignment** and **major alignment**.

7.1 INSPECTION BEFORE ALIGNMENT

Check the following before doing a front wheel alignment:

1. Ensure that the vehicle is at normal riding height. See Section 16, *"Suspension"* under heading 7: *"Suspension Height Adjustment"*.
2. Ensure that front wheels are not the cause of the problem. See Section 13, *"Wheels, Hubs and Tires"*. Inspect the tires for wear patterns indicating suspension damage or misalignment.
   a. Make sure the tires are inflated to the specified pressure.
   b. Make sure the front tires are the same size and type.
   c. Make sure the wheels are balanced.
   d. Check wheel installation and straightness.
3. Check the wheel bearing adjustment. See Section 13, *"Wheels, Hubs and Tires".*
4. Check steering linkage for bending and pivot points for looseness.
5. Check knuckle pins for evidence of excessive wear.
6. Check radius rods for bending and rubber bushings for evidence of excessive wear.
7. Make sure all fasteners are tightened to the specified torque. Use a torque wrench for verification. As soon as the fastener starts to move, record the torque. Correct if necessary. Replace any worn or damaged fasteners.

7.2 MINOR FRONT WHEEL ALIGNMENT

Perform a minor front wheel alignment for all normal maintenance conditions.

Perform the minor front wheel alignment in the following sequence :

1. Inspect all the systems that affect the wheel alignment. See paragraph 6.1, *"Inspection Before Alignment"* in this section.
2. Check the hub bearings. See section 13, *"Wheels, hubs and Tires"* under heading 8: Front and Tag Axle Wheel Hubs.
3. Check and adjust the toe-in.

7.3 MAJOR FRONT WHEEL ALIGNMENT

Perform a major front wheel alignment to correct steering and tire wear conditions.

Perform the major front wheel alignment in the following sequence:

1. Inspect all systems affecting the wheel alignment. See paragraph 6.1, *"Inspection Before Alignment"* in this section.
2. Check the hub bearings. See section 13, *"Wheels, hubs and Tires"* under heading 8: Front and Tag Axle Wheel Hubs.

NOTE
If steering angle stoppers are changed, a special procedure is required for readjusting gearbox steering limiter. See paragraph 6.5 "Hydraulic Stop" in this section.

3. Check and adjust the turning angle adjustment.
4. Check the camber angle.
5. Check and adjust the caster angle.
6. Check and adjust the toe-in.

7.4 TURNING ANGLE ADJUSTMENT

The maximum turning angle is set through the two steering stop screws installed on the axle center. The turning angle is factory adjusted to accommodate the chassis design, and therefore, does not require adjustment on new vehicles. However, it should be checked and adjusted any time any component of the steering system is repaired, disassembled or adjusted.

Check if front tires rub against the frame or if the steering gear has been serviced.

Proceed with the following method to check the steering maximum turning angle :

7.4.1 R.H. Turn Adjustment

⚠ **CAUTION**
To prevent the steering damper from interfering with the adjustment of turning angles, make sure its fixing bracket is at the correct location on the axle center (refer to section 14 "Steering").

1. Turn steering wheel to the right until the boss on the axle center touches the right stop screw.
2. Verify the nearest point of contact of the ball socket body with the air bellows support assembly. Measure the distance between those two points.
3. The distance between these two points should be approximately 1/8 inch (3 mm). If not, the steering stop screws must be readjusted.
4. Verify the nearest point of contact of the drag link with the tire. Measure the distance between those two points.
5. The distance should be 1 inch (25 mm) or more. If not, the steering stop screws must be readjusted.
6. This must be done for a full right turn.
7. If readjustment is required:
   a. Remove the swivel stop screw.
   b. Add to the stop screw the required number of washers to obtain the proper measure, tighten the stop screw afterwards. Two washers of different thickness are available: 1/16 inch and 3/16 inch.

7.4.2 L.H. Turn Adjustment

1. Turn steering wheel to the left until the boss on the axle center touches the left stop screw.
2. Verify the nearest point of contact of the ball socket body with the air bellows support assembly. Measure the distance between those two points.
3. The distance between these two points should be approximately 1/8 inch (3 mm). If not, the steering stop screws must be readjusted.
4. Check the stroke of the steering stabilizer cylinder (damper). It should not exceed 12.59 inches (320 mm).
5. The steering stopper screw must be in contact before the steering stabilizer reaches the end of the stroke.
6. This must be done for a full left turn.
7. If readjustment is required:
   a. Remove the swivel stop screw.
   b. Add to the stop screw the required number of washers to obtain the proper measure, tighten the stop screw afterwards. Two washers of different thickness are available: 1/16 inch and 3/16 inch.

NOTE
If steering angle stoppers are changed, a special procedure is required for readjusting gearbox steering limiter. See paragraph 6.5 "Hydraulic Stop" in this section.

7.5 HYDRAULIC STOP

NOTE
Before steering limiter readjustment, verify vehicle wheel alignment and ensure that oil level is checked and that air bleeding is done.

Refer to *'ZF-Servocom Repair Manual"* annexed at the end of Section 14 *''Steering"* under heading *'Setting and Functional Test.*

7.6 FRONT WHEEL CAMBER

Wheel camber is the number of degrees the top of the wheel tilts outward (positive) or inward (negative) from a vertical angle (Figure 3).

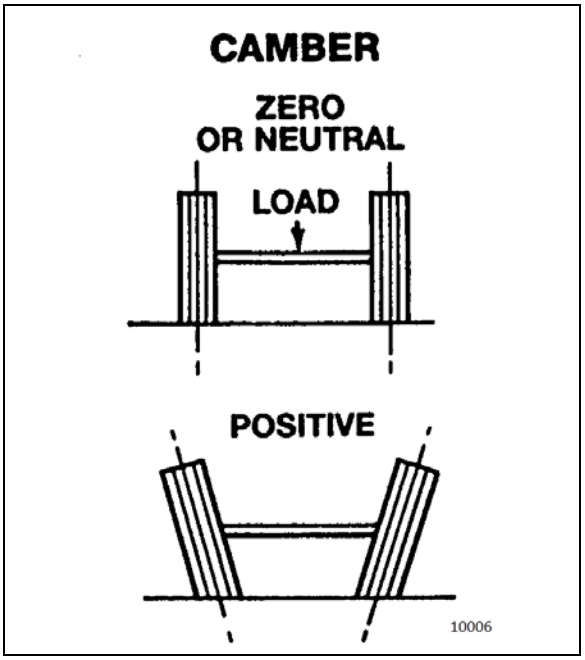

FIGURE 3: CAMBER

The camber angle is not adjustable. Camber variations may be caused by wear at the wheel bearings, steering knuckle pins or by a bent knuckle or sagging axle center. Steering effort is affected by improper camber, and uneven tire wear will result. Excessive positive camber causes an irregular wear of tire at the outer shoulder and excessive negative camber causes wear at the inner shoulder.

7.6.1 Camber Check

For camber specifications, refer to paragraph 8: ''SPECIFICATIONS'' in this section

1. Use an alignment machine to check the camber angle.
2. If camber reading is not in the specifications, adjust the wheel bearings and repeat the check. If the reading is still not within specifications, verify the steering knuckle pins and axle center.
3. Check the wheel lateral distortion as instructed in Section 13, *''Wheels, Hubs and Tires"* under heading, *"Checking for Distorted Wheel on Vehicle"*. If distortion is excessive, straighten or replace wheel(s).

7.7 FRONT AXLE CASTER

For caster specifications, refer to paragraph 8: ''SPECIFICATIONS'' in this section.

Positive caster is the rearward tilt from the vertical axis of the knuckle pin. Negative caster is the forward tilt from the vertical axis of the knuckle pin (Figure 4). This vehicle is designed with a positive caster. The purpose of the caster angle is to give a trailing effect. This results in stabilized steering and a tendency for the wheels to return to the straight-ahead position after taking a turn.

Excessive caster results in hard steering around corners. A shimmy may also develop when returning to the straight ahead position (pulling out of curves).

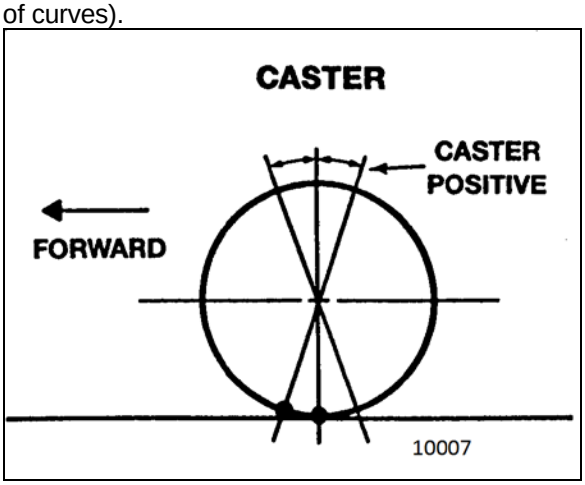

FIGURE 4: CASTER

Insufficient caster will cause wandering and steering instability. Caster variations may be

caused by a bent axle, tilting or distortion of the side suspension supports, damaged radius rod bushings, or unequal tightening of the front and rear suspension support bolts. Incorrect caster must be corrected by replacing the damaged suspension parts. A precision instrument should be used to measure the caster.

NOTE
The caster of this vehicle is factory set and is not adjustable. However, if after replacing damaged parts or in case of improper caster due to irregular setting, the front axle caster needs adjustment; it can be adjusted by means of shims (Prevost #110663) on the left-hand side upper radius rod support in order to obtain minor adjustment.

7.8 FRONT WHEEL TOE-IN

Wheel toe-in is the degree (usually expressed in fractions of an inch) to which the forward part of the vehicle front wheels are closer together than the rear part, measured at wheel centerline height with the wheels in the normal ''straight-ahead'' position of the steering gear.

Incorrect toe-in results in excessive tire wear caused by side slippage and also steering instability with a tendency to wander. Toe-in may be measured from the center of tire tread or from the inside of the tires. Take measurements at both front and rear of axle (see ''A'' and ''B'' in Figure 5).

When setting toe-in adjustment, the front suspension must be neutralized; that is, all component parts must be in the same relative position when marking the adjustment as they will be when in operation.

To neutralize the suspension, the vehicle must be rolled forward, approximately ten feet.

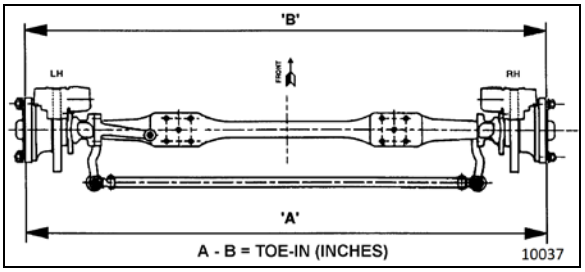

FIGURE 5: TOE-IN MEASUREMENT

For toe-in specifications, refer to paragraph 8 ''Specifications'' in this section.

By rolling the vehicle forward, all tolerances in the front suspension are taken up and the suspension is then in its normal operating position. Neutralizing the front suspension is extremely important, especially if the vehicle has been jacked up in order to mark the tires. Otherwise, the front wheels will not return to their normal operating position due to the tires gripping the floor surface when the vehicle jack is lowered.

NOTE
''Toe-in'' measurements must be taken at the horizontal axis of the wheel centerline.

7.8.1 Inspection and Adjustment

Before checking front wheel toe-in, first check the camber angles and make the necessary corrections.

1. Measure the toe-in.
2. If the toe-in measurement is not within the specified tolerance, carry out the following procedure :
   a. Loosen the pinch bolt nuts and bolts on each tie rod end.
   b. Turn the tie rod until the specified toe-in measurement is obtained.
   c. Tighten the pinch bolt nuts alternately and progressively, thus securing all tie rod joints.

TORQUE: 65-75 lb-ft (88-102 Nm)

Use static wheel alignment systems which work with angle measurements only, such as Josam or Hunter systems. Static alignment specifications are listed in the following tables:

FRONT WHEEL ALIGNMENT SPECIFICATIONS WITH I-BEAM AXLE			
Front Wheel Alignment	**Minimal**	**Nominal**	**Maximal**
Camber, (degrees) R.H. and L.H. *	-0.250	0.125	0.375
Caster, (degrees) R.H. and L.H.	2	2.75	3.5
Total toe (A minus B), (degrees)	0.04	0.06	0.08

8. TROUBLESHOOTING

CONDITION	CAUSE	CORRECTION
Tires wear out quickly or have uneven tire tread wear.	1. Tires have incorrect air pressure. 2. Tires out-of-balance. 3. Incorrect tag axle alignment. 4. Incorrect toe-in setting. 5. Incorrect steering arm geometry.	1. Put specified air pressure in tires. 2. Balance or replace tires. 3. Align tag axle. 4. Adjust toe-in specified setting. 5. Service steering system as necessary.
Vehicle is hard to steer.	1. Low pressure in the power steering system. 2. Steering gear not assembled correctly. 3. Steering linkage needs lubrication. 4. King pins binding. 5. Incorrect steering arm geometry. 6. Caster improperly adjusted. 7. Tie rod ends hard to move. 8. Worn thrust bearing.	1. Repair power steering system. 2. Assemble steering gear correctly. 3. Lubricate steering linkage. 4. Replace king pins. 5. Service steering system as necessary. 6. Adjust caster as necessary. 7. Replace tie rod ends. 8. Replace thrust bearing.
Bent or damaged steering arm, steering top lever or tie rod assembly.	1. Too much pressure in the power steering system. 2. Cut-off pressure of the power steering system improperly adjusted. 3. Vehicle not powered on correctly. 4. Power steering system not installed correctly.	1. Replace damaged part(s), adjust power steering system to specified pressure. 2. Replace damaged part(s) as required and adjust power steering system. 3. Make sure vehicle is powered on correctly. 4. Correctly install the power steering system.
Worn or damaged steering ball stud.	1. Drag link fasteners tightened past specified torque. 2. Lack of lubrication or incorrect lubricant. 3. Power steering stops improperly adjusted.	1. Replace damaged part(s), tighten drag link fasteners to specified torque. 2. Lubricate linkage with specified lubricant. 3. Adjust stops to specified dimension.

Worn kingpins and knuckle bushings.	1. Worn or missing seals and gaskets. 2. Incorrect lubricant. 3. Axle not lubricated at scheduled frequency. 4. Incorrect lubrication procedures. 5. Lubrication schedule does not match operating conditions.	1. Replace damaged part(s), replace seals and gaskets. 2. Lubricate axle with specified lubricant. 3. Lubricate axle at scheduled frequency. 4. Use correct lubrication schedule to match operating conditions. 5. Change lubrication schedule to match operating conditions.
Vibration or shimmy of front axle during operation.	1. Caster not adjusted properly. 2. Wheels and/or tires out-of balance. 3. Worn steering stabilizer cylinder.	1. Adjust caster. 2. Balance or replace wheels and/or tires. 3. Replace steering stabilizer cylinder.

9. SPECIFICATIONS

Front Axle

Make ..... DANA SPICER EUROPE

Model S84U

Front Track ..... 84.4 inches (2 145 mm)

Rated load capacity ..... 16,500 lbs (7 500 kg)

CONTENTS

1. TORQUE TABLES 3

1.1 MERITOR DRIVE AXLE 3
1.2 ZF A132 DRIVE AXLE 4
1.3 TAG AXLE 5

2. MERITOR DRIVE AXLE 6

2.1 DESCRIPTION 6
2.2 DCDL (DRIVER-CONTROLLED MAIN DIFFERENTIAL LOCK) 6
2.3 MAINTENANCE 6
2.3.1 Drive Axle Lubrication 6
2.3.2 Checking and Adjusting the Oil Level 7
2.3.3 Draining and Replacing the Oil 8
2.4 REMOVAL AND REINSTALLATION 8
2.5 DISASSEMBLY AND REASSEMBLY 9
2.6 GEAR SET IDENTIFICATION 9
2.7 ADJUSTMENTS 9
2.8 FASTENER TORQUE CHART 9
2.9 TIRE MATCHING 9
2.10 DRIVE AXLE ALIGNMENT 9
2.10.1 Procedure 10
2.10.2 Drive Axle Alignment Specifications 10
2.11 AXLE SHAFT SEALING METHOD 10

3. ZF A132 DRIVE AXLE 11

3.1 MAINTENANCE 12
3.1.1 Differential Oil Type 12
3.1.2 Checking and Adjusting the Differential Oil Level 12
3.1.3 Differential Oil Change 12
3.1.4 Compact Bearing (Hub Unit) Axial Play Check 13
3.1.5 Compact bearing (hub unit) Grease Change 14
3.1.6 Speed Sensors (Anti-Lock Brake system, ABS) 14
3.2 DRIVE AXLE FLANGE SHAFT REMOVAL/INSTALLATION 14
3.3 REMOVAL AND REINSTALLATION 16
3.4 DISASSEMBLY, REASSEMBLY, ADJUSTMENT AND TORQUE CHART 16
3.5 ZF A132 DRIVE AXLE ALIGNMENT 16
3.5.1 Procedure 17

4. TAG AXLE 17

4.1 UNLOADING TAG AXLE (OPTIONAL) 17
4.2 RETRACTING TAG AXLE 18
4.3 RETRACTING TAG AXLE FOR REPAIR PURPOSES 18
4.4 TAG AXLE WHEEL BEARINGS 18
4.5 REMOVAL AND REINSTALLATION 18
4.5.1 Removing Tag Axle Only 18
4.5.2 Removing Tag Axle Along With Suspension Components 18
4.5.3 Removing Transversal radius Rod 19
4.6 TAG AXLE ALIGNMENT 20

5. SPECIFICATIONS 21

SECTION CHANGE LOG

	DESCRIPTION	DATE
1		
2		
3		
4		
5		
6		

1. TORQUE TABLES

1.1 MERITOR DRIVE AXLE

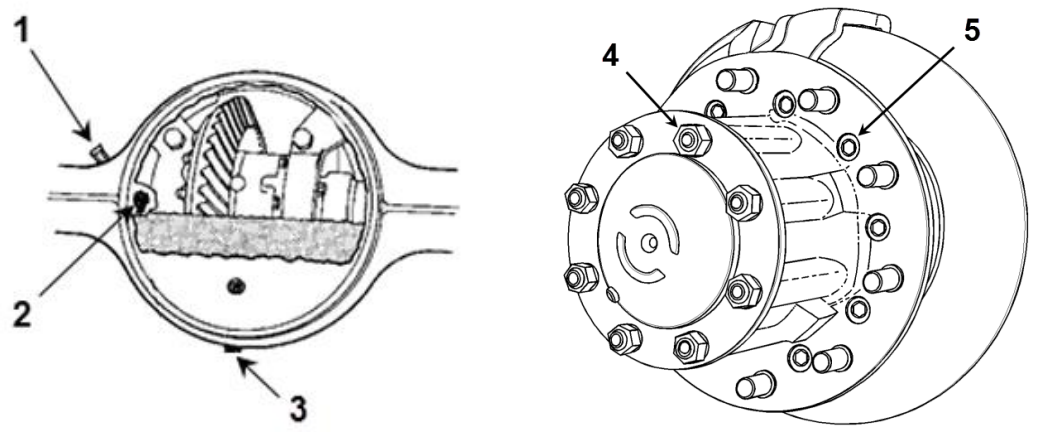

MERITOR DRIVE AXLE		
No	DESCRIPTION	TORQUE
1	Breather	12-18 lb-ft (16-24 Nm)
2	Fill / Level check plug	35 lb-ft (47 Nm) minimum *
3	Drain plug	35-50 lb-ft (47-68 Nm)
4	Drive shaft flange nuts 5/8-18	150-230 lb-ft (203-312 Nm)
5	Hub to disc cap screws 9/16-18	110-165 lb-ft (149-224 Nm)

* Minimum value, tighten until only one full plug thread is visible.

1.2 ZF A132 DRIVE AXLE

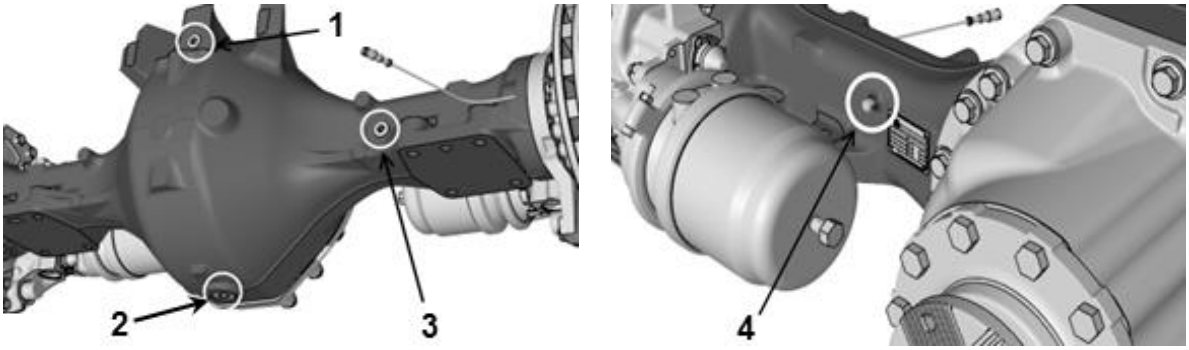

ZF A132 DRIVE AXLE		
No	DESCRIPTION	TORQUE
1	Filler plug	52 lb-ft (71 Nm)
2	Drain plug	96 lb-ft (130 Nm)
3	Level check plug	52 lb-ft (71 Nm)
4	Breather	4 lb-ft (5 Nm)

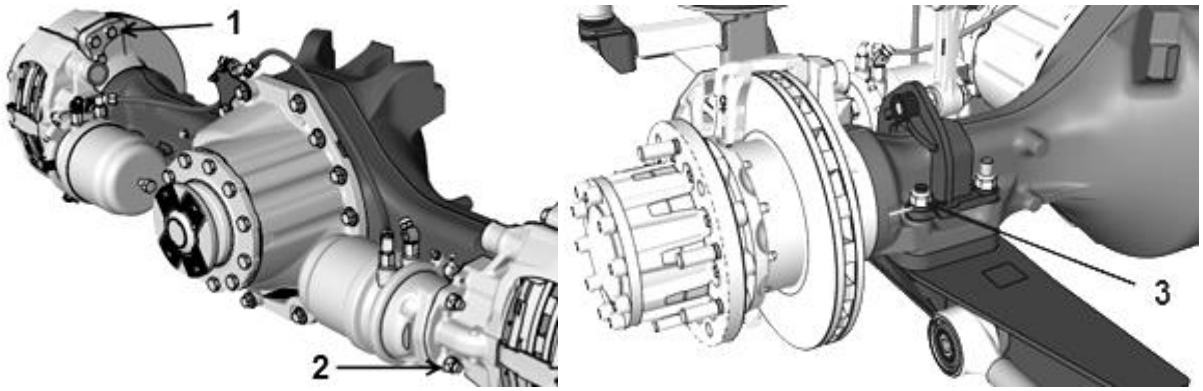

ZF A132 DRIVE AXLE		
No	DESCRIPTION	TORQUE
1	Caliper mounting bolts	200 lb-ft (271 Nm)
2	Brake air chamber mounting bolts	120-150 lb-ft (163-203 Nm)
3	Axle to frame mounting bolts	405-495 lb-ft (549-671 Nm)

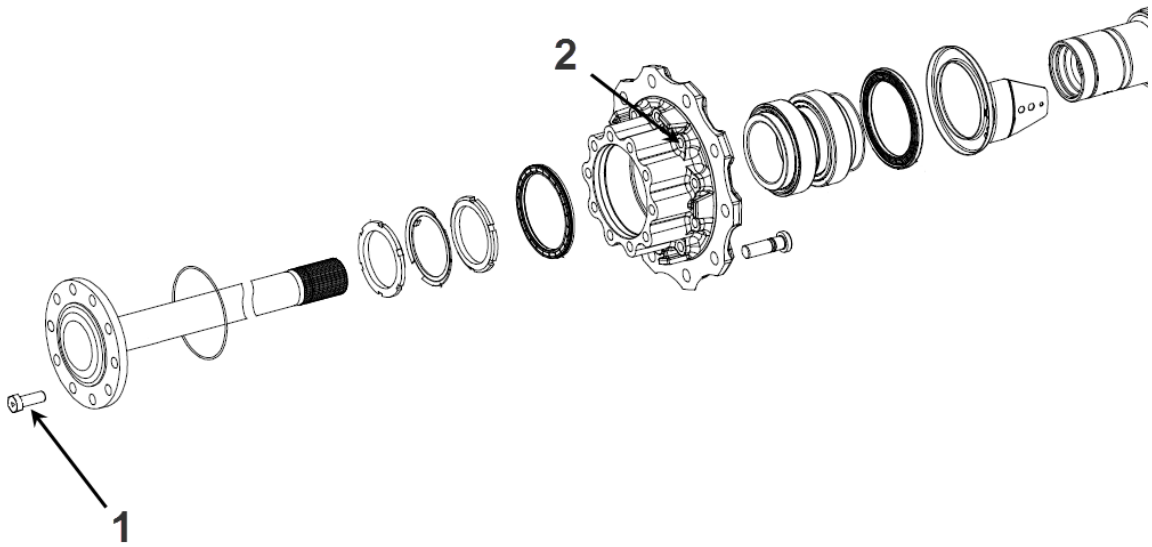

ZF A132 DRIVE AXLE		
No	DESCRIPTION	TORQUE
1	Drive shaft flange bolts cap screw M18x1.5x50mm G10.9	325 lb-ft (441 Nm)
2	Hub cap screw Torx M16x1.5x60	221 lb-ft (300 Nm)

1.3 TAG AXLE

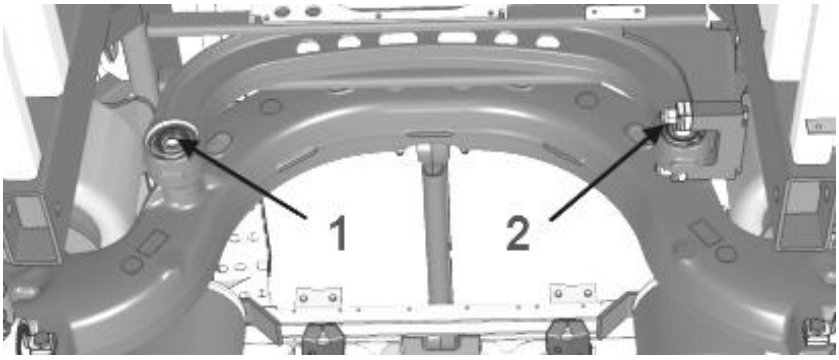

TAG AXLE		
No	DESCRIPTION	TORQUE
1	Tag axle transversal radius rod (stud) retaining bolt	198 lb-ft (268 Nm)
2	Tag axle radius rods nut	228-252 lb-ft (309-342 Nm)

2. MERITOR DRIVE AXLE

2.1 DESCRIPTION

The Meritor drive axle is equipped with a single reduction standard carrier mounted in front of the axle housing. The carrier consists of a hypoid drive pinion, a ring gear set and gears in the differential assembly.

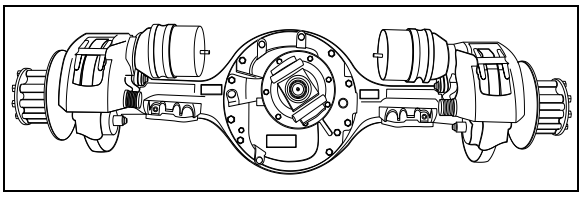

FIGURE 1: DRIVE AXLE 11019

A straight roller bearing (spigot) is mounted on the head of the drive pinion. All other bearings in the carrier are tapered roller bearings. When the carrier operates, there is a normal differential action between the wheels all the time.

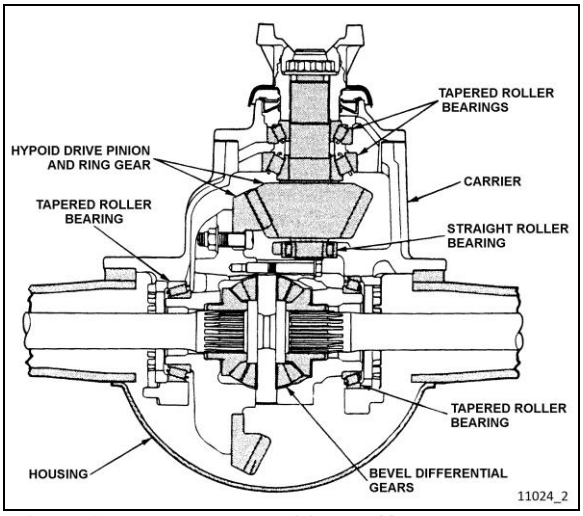

FIGURE 2: DIFFERENTIAL ASSEMBLY

Several speed ratios are available for the drive axle. These ratios depend upon the motor and transmission. Also, special applications may suggest slightly different gear ratios.

Additional information is found in the following manuals, included on your vehicle Technical Publications USB flash drive:

- ***Meritor Maintenance Manual 5A – single reduction differential carriers***
- ***Meritor Maintenance Manual 23A – Bus and Coach Rear Drive Axles***
- ***Meritor Technical Bulletin TP-9539 Approved Rear Drive Axle Lubricants***

2.2 DCDL (DRIVER-CONTROLLED MAIN DIFFERENTIAL LOCK)

Meritor Single-reduction carriers with driver-controlled main differential lock (DCDL) have the same type of gears and bearings as the standard-type carriers. The differential lock is operated by an air actuated shift assembly that is mounted on the carrier.

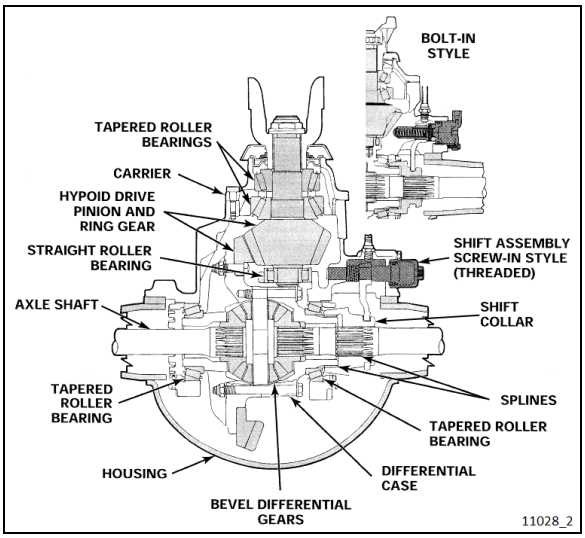

FIGURE 3: DRIVER-CONTROLLED DIFFERENTIAL LOCK

2.3 MAINTENANCE

Proper vehicle operation begins with preventive maintenance, such as good differential use. The most common types of drive axle carrier failures are spinout, shock, fatigue, overheating and lubrication. Avoid neglecting these points since they would be the first steps to improper maintenance, expensive repairs, and excessive downtime.

MAINTENANCE

Inspect the pinion oil seal, axle shaft flange and carrier housing gaskets for evidence of lubricant leakage. Tighten the bolts and nuts, or replace the gaskets and seals to correct leaks. Maintenance of the axle mountings consists primarily in a regular and systematic inspection of the air suspension units and radius rods, as directed in Section 16, *"Suspension".*

2.3.1 Drive Axle Lubrication

Use multigrade gear oil meeting API specification GL-5. Petroleum based gear oil may be used for standard drains interval. Fully synthetic gear oil must be used for extended

drains interval. In extreme conditions, or for better performance, fill with synthetic gear oil.

Fill Meritor axle with approved lubricants.Refer to Meritor technical bulletin **TP-9539 Approved Rear Drive Axle Lubricants** for oil selection.

MAINTENANCE

Differential oil

Check oil level (add if necessary) at the intervals specified by the Lubrication And Servicing Schedule in Section 24: LUBRICATION & SERVICING.

MAINTENANCE

Extended Drains

If using full synthetic gear oil, change differential oil and clean the breathers, magnetic fill and drain plugs, at the intervals specified by the Lubrication And Servicing Schedule in Section 24: LUBRICATION & SERVICING.

Regular Drains

If using petroleum based oil, change differential oil and clean the breathers, magnetic fill and drain plugs, at the intervals specified by the Lubrication And Servicing Schedule in Section 24: LUBRICATION & SERVICING.

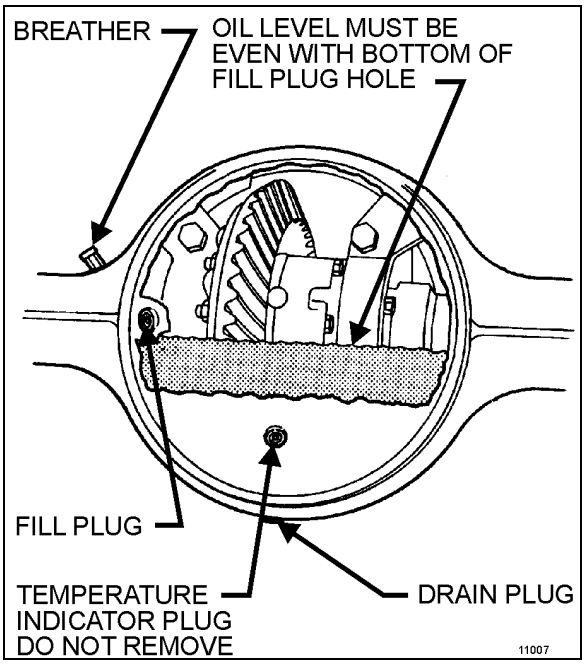

FIGURE 4: DIFFERENTIAL HOUSING BOWL 11007

2.3.2 Checking and Adjusting the Oil Level

DANGER

Before servicing, park safely over a repair pit; apply parking brake, stop engine and set battery master switch to the "OFF" position.

1. Make sure the vehicle is parked on a level surface.

WARNING

Check the oil level when the axle is at room temperature. When hot, the oil temperature may be 190ºF (88ºC) or more and can cause burns. Also, a correct reading is not obtained when the axle is warm or hot.

2. Make sure the axle is "cold" or at room temperature.
3. Clean the area around the fill plug. Remove the fill plug from the differential axle housing bowl (Figure 4).
4. The oil level must be even with the bottom of the hole of the fill plug.
   a. If oil flows from the hole when the plug is loosened, the oil level is high. Drain the oil to the correct level.

b. If the oil level is below the bottom of the hole of the fill plug, add the specified oil.

5. Install and tighten the fill plug.

TORQUE: 35 lb-ft (47 Nm)

(Tighten until only one full plug thread is visible)

2.3.3 Draining and Replacing the Oil

DANGER

Before servicing, park safely over a repair pit; apply parking brake, stop engine and set battery master switch to the "OFF" position.

1. Make sure the vehicle is parked on a level surface. Put a large container under the axle's drain plug.

NOTE

Drain the oil when the axle is warm.

2. Remove the drain plug from the bottom of the axle. Drain and discard the oil in an environment friendly manner.
3. Install and tighten the drain plug.

TORQUE: 35-50 lb-ft (47-68 Nm)

4. Clean the area around the fill plug. Remove the fill plug from the differential housing bowl.
5. Add the specified oil until the oil level is even with the bottom of the hole of the fill plug. Allow the oil to flow through the axle and check the oil level again (lube capacity 41 pints [13.3 liters]).

CAUTION

The differential overheats when the oil temperature rises above 250ºF (120ºC).

6. Install and tighten the fill plug.

TORQUE: 35 lb-ft (47 Nm)

(Tighten until only one full plug thread is visible)

Speed Sensors (Anti-Lock Brake system, ABS)

For removing and installing the drive axle speed sensors (for anti-lock brake systems, ABS), refer to Section 12: *"Brake and Air System"* and to Rockwell WABCO Maintenance Manual: *"Anti-Lock Brake Systems For Trucks, Tractors and Buses"*, annexed at the end of section 12.

2.4 REMOVAL AND REINSTALLATION

The following procedure deals with the removal of the drive axle assembly and its attachments as a unit. The method used to support the axle during removal and disassembly depends upon local conditions and available equipment.

1. Raise vehicle by its jacking points on the body (Figure 5 or see Section 18, *"Body"* under heading *"Vehicle Jacking Points").* Place jack stands under frame. Remove drive axle wheels (if required, refer to Section 13, *"Wheels, Hubs And Tires".*

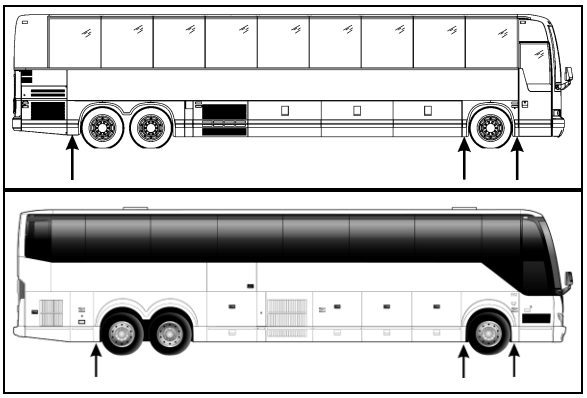

FIGURE 5: JACKING POINTS ON FRAME 18524

2. Exhaust compressed air from the air supply system by opening the drain cock on each air reservoir.
3. Disconnect the propeller shaft as directed in Section 9, *"Propeller Shaft",* in this manual.
4. On both sides of the vehicle, unscrew fasteners retaining front wheel housing plastic guards, and remove them from vehicle.
5. Disconnect both height control valve links from air spring mounting plate brackets then move the arm down to exhaust the air suspension.
6. Remove cable ties securing the ABS cables (if vehicle is so equipped) to service brake chamber hoses. Disconnect the ABS cable plugs from the drive axle wheel hubs.

NOTE

When removing drive axle, if unfastening cable ties is necessary for ease of operation, remember to replace them afterwards.

7. Disconnect the brake chamber hoses.

NOTE
Position the hoses so they will not be damaged when removing the axle.

8. Install jacks under the axle jacking points to support the axle weight (refer to Figure 6).

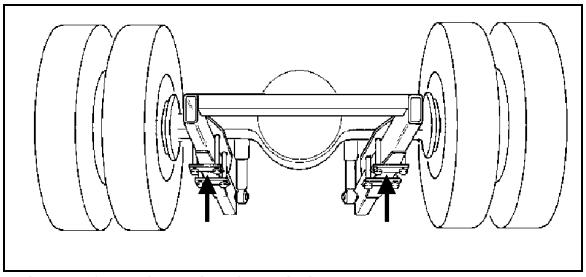

FIGURE 6: JACKING POINTS ON DRIVE AXLE H3B762

9. Remove the four shock absorbers as outlined in *Section 16: Suspension* under heading *Shock Absorber Removal.*
10. Remove the sway bar.
11. Remove the lower and upper longitudinal radius rod supports from vehicle sub-frame as outlined in *Section 16: Suspension,* under heading *"Radius Rod Removal".*
12. Remove the transversal radius rod support from the vehicle sub-frame.
13. Remove the two retaining nuts from each of the four air bellows lower mounting supports.
14. Use the jacks to lower axle. Carefully pull away the jacks axle assembly from underneath vehicle.
15. Reverse removal procedure to reinstall drive axle.

NOTE
Refer to Section 16: Suspension for suspension components' proper tightening torques.

NOTE
Refer to section 13 "Wheels, Hubs And Tires" for correct wheel bearing adjustment procedure.

2.5 DISASSEMBLY AND REASSEMBLY

Disassembly and re-assembly procedures are covered under applicable headings in Meritor's *"MAINTENANCE MANUAL, NO. 5A",* annexed to this section.

2.6 GEAR SET IDENTIFICATION

Gear set identification is covered under applicable heading in Meritor's *"MAINTENANCE MANUAL NO. 5A"*.

2.7 ADJUSTMENTS

Adjustments are covered under applicable headings in Meritor's *"MAINTENANCE MANUAL NO. 5A",* annexed to this section.

2.8 FASTENER TORQUE CHART

A differential fastener torque chart is provided in Meritor's *"MAINTENANCE MANUAL NO. 5",* annexed to this section.

2.9 TIRE MATCHING

Drive axle tire matching is covered under the applicable heading in Section 13, *"Wheels, Hubs And Tires"* in this manual.

2.10 DRIVE AXLE ALIGNMENT

NOTE
For drive axle alignment specifications, refer to paragraph 3: "Specifications" in this section.

The drive axle alignment consists in aligning the axle according to the frame. The axle must be perpendicular to the frame. The alignment is achieved with the use of shims inserted between the lower longitudinal radius rod supports and the frame.

Drive axle alignment is factory set and is not subject to any change, except if the vehicle has been damaged by an accident or if there are requirements for replacement.

If the axle has been removed for repairs or servicing and if all the parts are reinstalled exactly in the same place, the axle alignment is not necessary. However, if the suspension supports have been replaced or altered, proceed with the following instructions to verify or adjust the drive axle alignment.

NOTE
When drive axle alignment is modified, tag axle alignment must be re-verified.

2.10.1 Procedure

1. Park vehicle on a level surface, then chock front vehicle wheels.
2. Using two jacking points (which are at least 30 inches [76 cm] apart) on drive axle, raise the vehicle sufficiently so that wheels can turn freely at about ½ inch from ground. Secure in this position with safety stands, and release parking brake.
3. Install wheel mount sensors on front and drive axles (Figure 7).

NOTE
*See reference numbers on wheel mount sensors (*Figure 7*).*

NOTE
Select axle specifications in the appropriate chart.

2.10.2 Drive Axle Alignment Specifications

With the system installed as for front axle alignment (Figure 7), adjust drive axle according to specifications chart below. Use static wheel alignment systems which work with angle measurements only, such as Josam or Hunter systems. Static alignment specifications are listed in the following tables:

DRIVE AXLE ALL VEHICLES			
Alignment / value	Minimum value	Nominal value	Maximum value
Thrust angle (deg.)	±0.11°		
Total Toe (deg.)	0.18 Toe-in	0	0.18 Toe-in

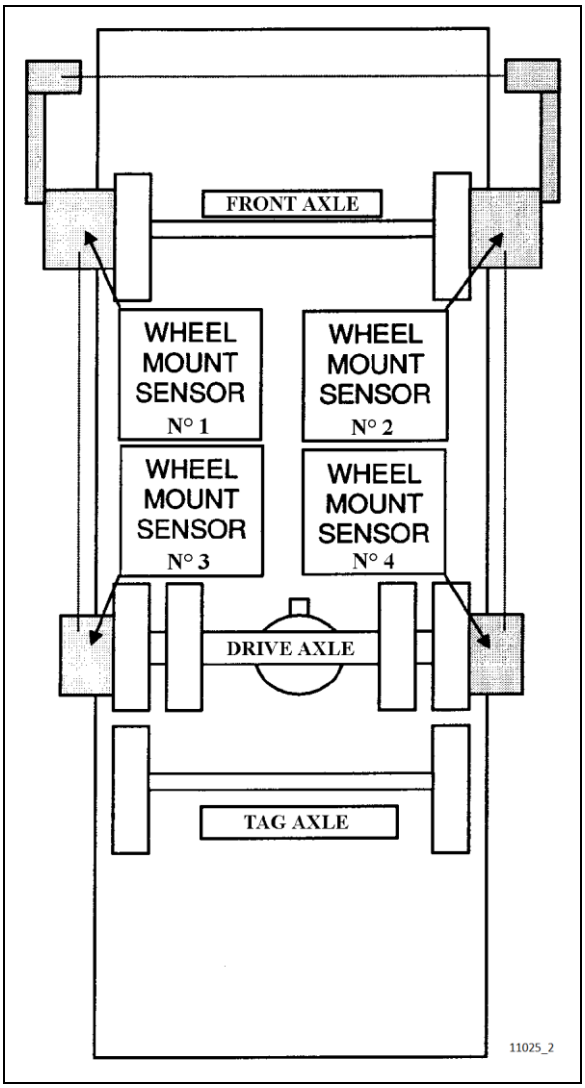

FIGURE 7: FRONT & DRIVE AXLE ALIGNMENT 11025

NOTE
Refer to Section 16, "Suspension", *for proper torque tightening of the longitudinal radius rod support nuts.*

NOTE
When the drive alignment is changed, the tag alignment must also be adjusted.

2.11 AXLE SHAFT SEALING METHOD

The following method is to be used to ensure that axle shaft installation is fluid-tight:

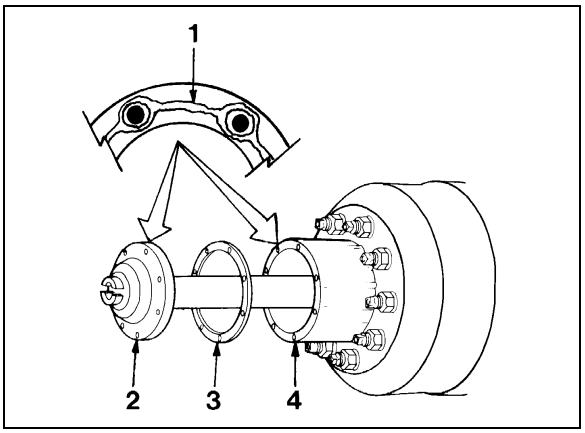

FIGURE 8: AXLE SHAFT INSTALLATION 11003

1 .....Silicone sealant*
2 ..... Axle shaft
3 .....Gasket
4 .....Wheel hub

1. Clean the mounting surfaces of both the axle shaft flange and wheel hub where silicone sealant will be applied. Remove all old silicone sealant, oil, grease, dirt and moisture. Dry both surfaces.
2. Apply a continuous thin bead of silicone sealant* (Prevost P/N 680053) on the mounting surfaces and around the edge of all fastener holes of both the axle shaft flange and wheel hub.

* *GENERAL ELECTRIC Silicone Rubber Adhesive Sealant RTV 103 Black.*

WARNING

Carefully read cautions and instructions on the tube of silicone sealant and its packing.

3. Assemble components immediately to permit the silicone sealant to compress evenly between parts.
   a. Place a new gasket and then install the axle shaft into the wheel hub and differential carrier. The gasket and flange of the axle shaft must fit flat against the wheel hub.
   b. Install the tapered dowels at each stud and into the flange of the axle shaft. Use a punch or drift and hammer if needed.
   c. Install the lock washers and nuts on the studs. Tighten nuts to the correct torque value.

NOTE

Torque values are for fasteners that have a light application of oil on the threads (refer to Meritor Maintenance Manual).

9/16-18 nut

TORQUE: 110-165 lb-ft (149-224 Nm)

5/8-18 nut

TORQUE: 150-230 lb-ft (203-312 Nm)

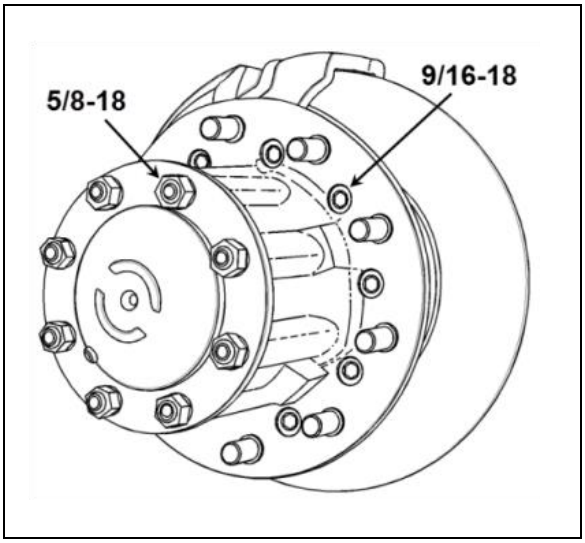

FIGURE 9: FASTENER SIZE IDENTIFICATION

3. ZF A132 DRIVE AXLE

This vehicle may be equipped with a ZF model A132 Hypoid Single Reduction drive axle, fitted with two Knorr Bremse brake chambers, Knorr Bremse SN7 disc brake and companion flange for Dana Spicer SPL250 propeller shaft. Visual wear indicator or potentiometer wear indicator may be installed. The carrier gear ratio is 3.54.

NOTE

Additional information is found in the following manuals, included on your vehicle technical publications CD:

- *OPERATING INSTRUCTIONS ZF AXLE A132 (version with US hub) #5871 207 982 EN.*
- *ZF AXLE A132 REPAIR MANUAL #5871 207 002E*

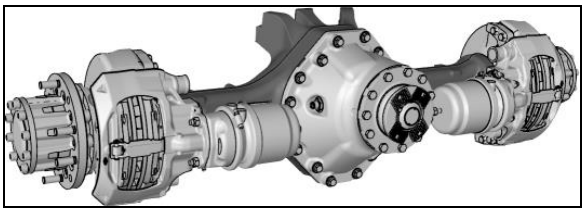

FIGURE 10: ZF A132 DRIVE AXLE 11019

3.1 MAINTENANCE

Proper vehicle operation begins with preventive maintenance, such as good differential use. The most common types of drive axle carrier failures are spinout, shock, fatigue, overheating and lubrication. Avoid neglecting these points since they would be the first steps to improper maintenance, expensive repairs, and excessive downtime.

Inspect at the pinion oil seal, axle shaft flange and carrier housing joint for evidence of lubricant leakage. Tighten the bolts and nuts, or replace the gaskets and seals to correct leaks.

Maintenance of the axle mountings consists primarily in a regular and systematic inspection of the radius rods, as directed in Section 16, *"Suspension".*

3.1.1 Differential Oil Type

Use **Chevron Multigear Oil 80W90 (**ZF lubricant class 12M). Other approved lubricants may be use. Additional lubrication information is covered in ZF's list of lubricants TE-ML 12.

3.1.2 Checking and Adjusting the Differential Oil Level

- Place the vehicle on a level surface.
- Level check plug must be cleaned carefully before opening.
- Check oil level at room temperature only.

MAINTENANCE

Oil level check

Check differential oil level and add if necessary at every engine oil change.

WARNING

Check the oil level when the axle is at room temperature. When hot, the oil temperature may be 190ºF (88ºC) or more and can cause burns. Also, a correct reading is not obtained when the axle is warm or hot.

- Make sure the axle is at room temperature.
- Clean the area around the level check plug. Remove the level check plug from the differential case.
- The oil level must be even with the bottom of the level check bore.

  If oil flows from the hole when the plug is loosened, the oil level is too high. Let drain the oil to the correct level.

  If the oil level is below the bottom of the level check bore, add the specified oil through the level check bore.
- Reinstall the level check plug using a new seals (O-ring).

Tighten to 52 lb-ft (71 Nm)

3.1.3 Differential Oil Change

- Place the vehicle on a level surface.
- Drain, filler and level check plugs must be cleaned carefully before opening.
- Drain oil only at operating temperature, immediately after the vehicle has been operated for an extended period of time.
- Renew seals components (O-rings).

MAINTENANCE

Oil change interval – Lubricant class 12M

Change differential oil and breather, clean the drain plug's magnetic inserts after 110 000 miles (180 000 km) or 3 years, whichever comes first.

Hot Region Operation. Change differential oil and breather, clean the drain plug's magnetic inserts after 80 000 miles (120 000 km) or 2 years, whichever comes first.

Note: Different oil change intervals may be applicable if not using Lubricant Class 12M oil. Refer to ZF list of lubricants TE-ML 12 for appropriate oil change intervals if not using Lubricant Class 12M .

Hot region oil change interval is applicable where:

The monthly average temperature exceeds 25°C in more than 2 months within a year or if temperatures rise above 40°C on more than 7 days in a year

Possible hot region: USA (South and deserts)

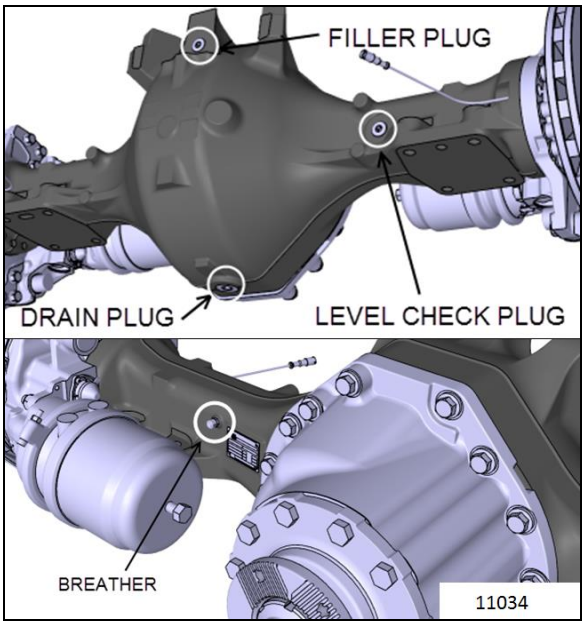

FIGURE 11: ZF A132 DRIVE AXLE

- Put a large container under the differential case drain plug. The differential case contains approximately 19 quarts of oil.
- Remove the drain plug from the bottom of the differential case. Drain all the oil and discard in an environment friendly manner.
- Clean the magnetic insert of the drain plug, fit a new seal (O-ring) and reinstall drain plug.

WARNING

The oil temperature may be extremely high! Risk of burn injuries.

- Remove the filler plug and the level check plug.
- Reinstall the drain plug.

Tighten to 96 lb-ft (130 Nm)

- Add the specified oil at the filler plug until the oil level is even with the bottom of the level check bore.

Filling volume is about 19 quarts (18 liters) at the level check bore

- Allow the oil to flow through the axle and check the oil level again after some minutes. Refill if necessary until specified level is reached and remains constant.
- Reinstall the filler plug and level check plug using new seals (O-ring).

Tighten to 52 lb-ft (71 Nm)

- Replace the breather with every oil change.

TORQUE: 4 lb-ft (5 Nm)

3.1.4 Compact Bearing (Hub Unit) Axial Play Check

Check the compact bearing (hub unit) axial play every 100 000 miles. Furthermore, the bearing must be checked in case of brake disk change, ABS fault message and rising noise level at increasing speed.

Perform compact bearing (hub unit) axial play check as described in paragraph 6.2 HOW TO CHECK THE AXIAL PLAY of the following manual: OPERATING INSTRUCTIONS ZF AXLE A132 (version with US hub) #5871 207 982 EN.

MAINTENANCE

Compact bearing (hub unit) axial play

Check the bearing axial play once a year or every100 000 miles (160 000 km) whichever occurs first.

3.1.5 Compact bearing (hub unit) Grease Change

Perform compact bearing (hub unit) grease change as described in paragraph 7.3 GREASE CHANGE IN THE HUB of the following manual: OPERATING INSTRUCTIONS ZF AXLE A132 (version with US hub) #5871 207 982 EN.

MAINTENANCE

Compact bearing (hub unit) axial play – ZF Lubricant class 12H

The compact bearing grease must be change every 6 years or 500 000 miles (800 000 km), whichever comes first.

The list of approved Lubricant Class 12H grease types is found in ZF's list of lubricants TE-ML 12.

3.1.6 Speed Sensors (Anti-Lock Brake system, ABS)

For removing and installing the drive axle speed sensors (for anti-lock brake systems, ABS), refer to Section 12: Brake and Air System.

3.2 DRIVE AXLE FLANGE SHAFT REMOVAL/INSTALLATION

Refer to paragraphs **9-Towing** and **11-Replacement of Axle Insert** in the following manuals, included on your vehicle USB flash drive:

- *OPERATING INSTRUCTIONS ZF AXLE A132 (version with US hub) #5871 207 982 EN.*

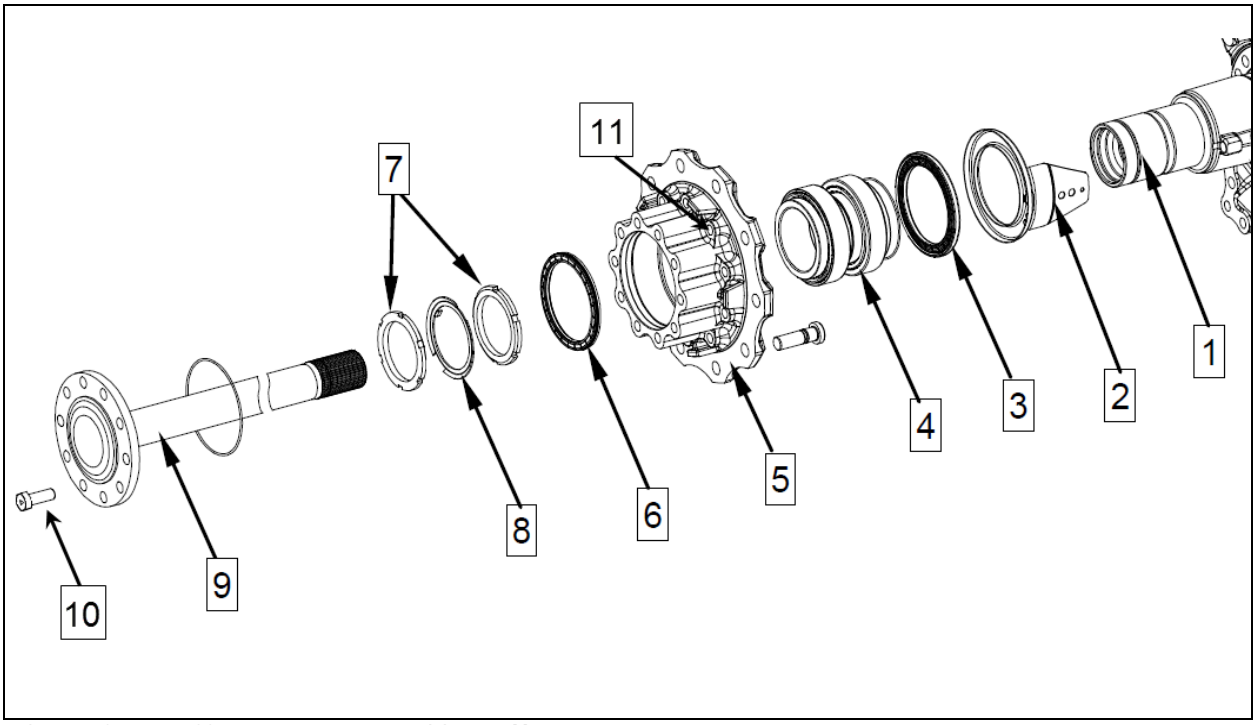

FIGURE 12: ZF A-132 DRIVE AXLE HUB ASSEMBLY

1	Hub carrier	7	Slotted nut
2	Screen sheet	8	Locking plate
3	Shaft seal (with impulse disc)	9	Flange shaft
4	Compact bearing (hub unit)	10	Cap screw M18x1.5x50mm G10.9 (14mm hex socket driver “Allen”)
5	Hub	11	Cap screw Torx M16x1.5x60 (E20 Torx socket)
6	Shaft seal		

3.3 REMOVAL AND REINSTALLATION

The following procedure deals with the removal of the drive axle assembly and its attachments as a unit. The method used to support the axle during removal and disassembly depends upon local conditions and available equipment.

2. Raise vehicle from the front wheels and drive axle wheels. Place jack stands under the rear chassis hoisting points. Remove drive axle wheels (if required, refer to Section 13, *"Wheels, Hubs and Tires".*
2. Exhaust compressed air from the air supply system by opening the drain cock on each air reservoir.
3. Disconnect the propeller shaft as directed in Section 9, *"Propeller Shaft",* in this manual.
5. Disconnect the lower end both height control valve link then move the arm up to exhaust air suspension.
6. Disconnect the ABS speed sensors connector located over the differential housing.

NOTE
When removing drive axle, if unfastening cable ties is necessary for ease of operation, remember to replace them afterwards.

7. Disconnect the air brake supply hoses over the differential carrier.

NOTE
Position the hoses so they will not be damaged when removing the axle.

8. Install jack stands under the drive axle subframe at the four locations shown on figure 4.

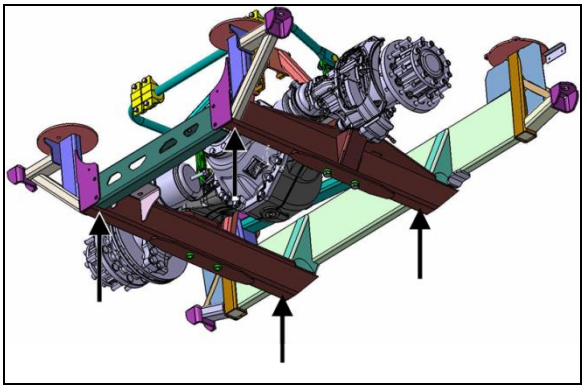

FIGURE 13: SUPPORT THE DRIVE AXLE SUBFRAME AT THE FOUR LOCATIONS SHOWN

16. Disconnect the lower ends of the four shock absorbers as outlined in Section 16, *"Suspension"* under heading *"Shock Absorber Removal".*
17. Remove the two sway bar links.
18. Remove the lower and upper longitudinal radius rod supports as outlined in Section 16, *"Suspension",* under heading *"Radius Rod Removal".*
19. Remove the transversal radius rod (panhard bar).
20. Remove the two retaining nuts from each of the four air springs lower mounting supports.
21. Disconnect the drive axle speed sensor.
22. Use the jacks to lower axle. Carefully pull away the drive axle assembly from underneath vehicle.
23. Reverse removal procedure to reinstall drive axle.

NOTE
Refer to Section 16, "Suspension" for suspension components' proper tightening torques.

NOTE
Refer to section 13 "Wheels, Hubs And Tires" for correct wheel bearing adjustment procedure.

3.4 DISASSEMBLY, REASSEMBLY, ADJUSTMENT AND TORQUE CHART

Disassembly and re-assembly procedures are covered in the following manual:

- *ZF AXLE A132 REPAIR MANUAL #5871 207 002E*

3.5 ZF A132 DRIVE AXLE ALIGNMENT

The drive axle alignment consists in aligning the axle according to the frame. The axle must be perpendicular to the frame. The alignment is achieved with the use of shims inserted between the lower longitudinal radius rod supports and the frame.

Drive axle alignment is factory set and is not subject to any change, except if the vehicle has been damaged by an accident or if there are requirements for replacement.

If the axle has been removed for repairs or servicing and if all the parts are reinstalled exactly in the same place, the axle alignment is not necessary. However, if the suspension supports have been replaced or altered, proceed with the following instructions to verify or adjust the drive axle alignment.

NOTE
When drive axle alignment is modified, tag axle alignment must be re-verified.

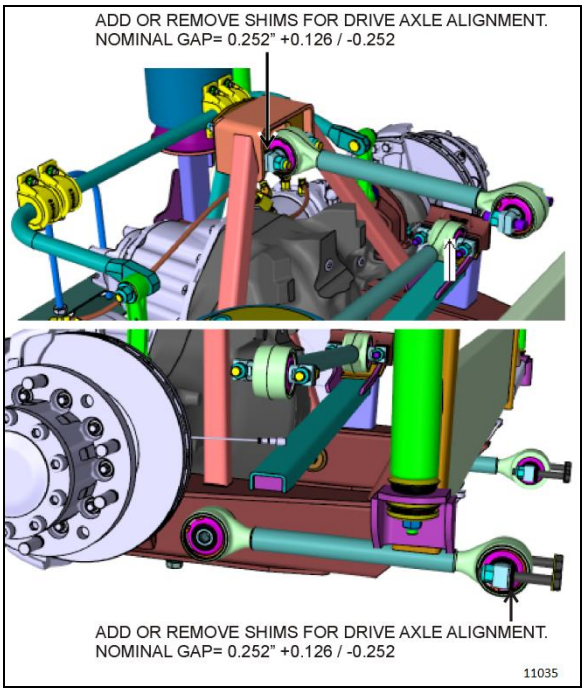

3.5.1 Procedure

1. Park vehicle on a level surface, then chock front vehicle wheels.
2. Using two jacking points (which are at least 30 inches [76 cm] apart) on drive axle, raise the vehicle sufficiently so that wheels can turn freely at about ½ inch from ground. Secure in this position with safety stands, and release parking brake.
3. Install wheel mount sensors on front end and drive axle wheels (Figure 7).

NOTE
Select axle specifications in the appropriate chart.

4. With the system installed as in Figure 7, adjust drive axle according to specifications' chart below.

DRIVE AXLE ZF A-132			
	Minimum value	Nominal value	Maximum value
Thrust angle	±0.11°		
Total toe	0.15° toe-in	0°	0.15° toe-out

4. TAG AXLE

The tag axle is located behind the drive axle. It carries a single wheel and tire on each side.

One optional system allows unloading of the tag axle air springs without raising the axle, while the other system enables unloading and raising of the tag axle (refer to the *"OPERATOR'S MANUAL"* for location of controls). Both of these systems have been designed for the following purposes:

1. Shortening of wheelbase, thus allowing tighter turning in tight maneuvering areas such as parking lots or when making a sharp turn.
2. Transferring extra weight and additional traction to the drive wheels on slippery surfaces.

CAUTION

Do not use tag axle in raised position for an extended period. Raising tag axle increases load on the drive axle, suspension and tires.

Do not drive vehicle with tag axle raised when speed is exceeding 9mph (15 km/h).

In order to prevent damage to the suspension, always raise the tag axle before lifting the coach.

The tag axle service brakes operate only when the axle is in normal driving (loaded) position.

4.1 UNLOADING TAG AXLE (OPTIONAL)

To reduce the turning radius, the air springs pressure will be automatically reduced by 75% when the coach is moving at speed lower than 5 mph (8 km/h) and with more than 1½ turn from the steering.

4.2 RETRACTING TAG AXLE

The standard tag axle retraction system is controlled by a valve located on the right lateral console and enables unloading and raising the tag axle (refer to the *"OPERATOR'S MANUAL"* for location of controls).

MAINTENANCE

Tag axle lever pivot

Grease one fitting on each pivot (2 pivots) at the intervals specified by the Lubrication And Servicing Schedule in Section 24: LUBRICATION & SERVICING.

4.3 RETRACTING TAG AXLE FOR REPAIR PURPOSES

- Connect an external air pressure line to the emergency fill valve in the engine compartment.
- Lift the tag axle by pushing the lever forward.

WARNING

Install a protective cover to prevent unfortunate lever operation while work is being carried out under the vehicle.

- Raise the vehicle using the lifts.

WARNING

Lift manufacturers recommended lowering the vehicle to the ground or installing some safety stands before activating the suspension to prevent the lifts from becoming unstable.

- For added safety, install nylon sling over tag axle shock absorbers to retain tag axle in case of air leak.

4.4 TAG AXLE WHEEL BEARINGS

The unitized hub bearings used on the tag axle are pre-adjusted, lubricated and have seals fitted as part of the manufacturing process. The bearings are greased for life and there is no need or facility for re-lubrication.

MAINTENANCE

Front and tag axle hub bearings need to be checked at the intervals specified by the Lubrication And Servicing Schedule in Section 24: LUBRICATION & SERVICING.

NOTE

For more information on front and tag axle wheel hub, refer to "DANA SPICER Maintenance Manual Model NDS and Maintenance Manual NDS Axles".

4.5 REMOVAL AND REINSTALLATION

4.5.1 Removing Tag Axle Only

The following procedure deals with the removal of the tag axle while keeping the air springs installed. The method used to support the axle and suspension components during removal and disassembly depends upon local conditions and available equipment.

1. Connect an external air pressure line to the emergency fill valve in the engine compartment.
2. Lift the axle by pushing the lever forward.

WARNING

Install a protective cover to prevent unfortunate lever operation while work is being carried out under the vehicle.

3. Disconnect tag axle air springs pneumatic hoses and install valves or plugs.
4. Raise the vehicle using the lifts.
5. Dismount tag axle components.
6. Before reinstalling air spring hoses, make sure there is no pressure left inside by opening the valves or unloading tag axle.

4.5.2 Removing Tag Axle Along With Suspension Components

The following procedure deals with the removal of the tag axle assembly along with the suspension components. The method used to support the axle and suspension components during removal and disassembly depends upon local conditions and available equipment.

1. Raise vehicle by its jacking points on the body (Figure 5) or see Section 18, *"Body"* under heading: *"Vehicle Jacking Points"*). Place jack under frame.
2. Remove drive axle wheels (if required, refer to Section 13, *"Wheels, Hubs And Tires"*).
3. Exhaust compressed air from the air supply system by opening the drain cock on each air reservoir and deplete air bags by moving leveling valve arm down.
4. Install jacks under tag axle jacking points to support the axle weight (Figure 14).

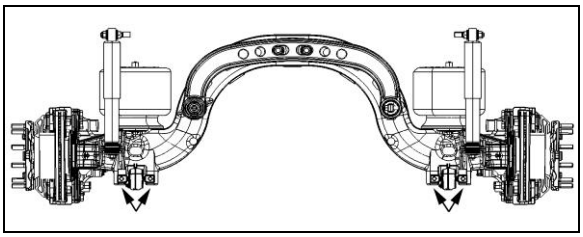

FIGURE 14: JACKING POINTS ON TAG AXLE 11023

5. Disconnect tag axle lifting chain collars from lower longitudinal radius rods.
6. Remove the propeller shaft as directed in *Section 9: Propeller Shaft* in this manual.
7. Disconnect the tag axle brake chamber hoses.

CAUTION

Position the hoses so they will not be damaged when removing axle.

8. Disconnect hose from the air spring upper mounting plate.
9. Remove the two shock absorbers as outlined in Section 16, *"Suspension",* under *"Shock Absorber Removal".*
10. Disconnect the lower longitudinal radius rods as outlined in Section 16, *"Suspension",* under *"Radius Rod Removal".*
11. Disconnect the transversal radius rod.
12. Disconnect the upper longitudinal radius rod.
13. Remove the air bellows retaining nuts from each of the two upper mounting plates.
14. Use the jacks to move the axle forward to clear the axle off the transmission. Lower the axle.
15. Reverse removal procedure to reinstall.

CAUTION

On vehicles equipped with an automatic transmission (with or without the output retarder), move tag assembly very carefully. Pay special attention to the U-shaped section, as the transmission end components may be easily damaged through a false maneuver.

NOTE

Refer to Section 16, *"Suspension"*, *for proper torque tightening of suspension components.*

NOTE

Refer to section 13 *"Wheels, Hubs And Tires" for correct wheel bearing adjustment procedure.*

4.5.3 Removing Transversal radius Rod

1. Unfasten bolts and nuts fixing transversal radius rod ball joint to rear underframe.
2. Remove the air bellows retaining nuts from each of the two upper mounting plates.
3. Install extractor tool g32952 onto transversal rod.
4. Partially unscrew ball joint fixing bolt.
5. Tighten extractor threaded rod.
6. Supporting the transversal radius rod at all times, gradually extract transversal radius rod from tag axle.
7. Reinstall by reversing procedure.

Torque: 198 lb-ft (268 Nm)

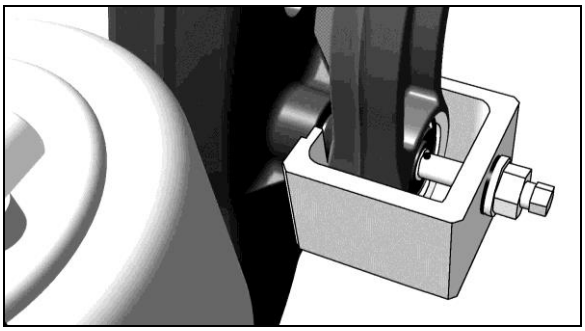

FIGURE 15: INSTALLING EXTRACTOR TOOL

CAUTION

It is strongly suggested to use the extractor tool in order to remove transversal radius rod.

4.6 TAG AXLE ALIGNMENT

The tag axle alignment consists in aligning the tag axle parallel to the drive axle position. Before aligning the tag axle, proceed with the drive axle alignment. Tag axle alignment is achieved with the use of shims inserted between the lower longitudinal radius rod supports and axle. Tag axle alignment is factory set and is not subject to any change, except if vehicle has been damaged by an accident or if there are requirements for parts replacement.

CAUTION

If this setting is altered significantly, it will cause excessive tire wear.

NOTE

It may be necessary to adjust the axle TOE as well as its alignment. In this case, insert shims (7 min. - P/N 121203 or 15 min. - P/N 121240) in between mounting plate and spindle, as required.

If axle has been removed for repair or servicing and if all parts are reinstalled exactly in their previous locations, axle alignment is not necessary. However, if the suspension supports have been replaced or have changed position, proceed with the following instructions to verify or adjust the tag axle alignment.

NOTE

For an accurate alignment, the tag axle must be aligned with the drive axle.

Adjust tag axle according to specifications' chart below in reference with drive axle. Use static wheel alignment systems which work with angle measurements only, such as Josam or Hunter systems.

TAG AXLE			
Alignment / value	Minimum value	Nominal value	Maximum value
Thrust angle (deg.)	-0.02	0	0.02
Total toe (deg.)	0.08° toe-in	0°	0.02° toe-out

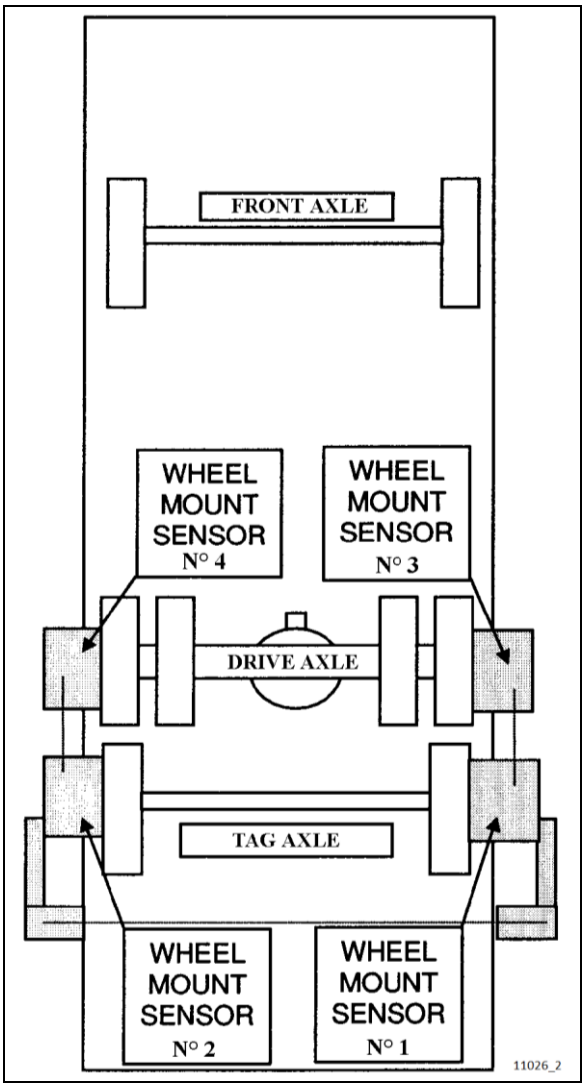

FIGURE 16: TAG AXLE ALIGNMENT

5. SPECIFICATIONS

MERITOR Drive Axle

Make ..... Meritor
Drive track ..... 76.7 inches (1 949 mm)
Gear type ..... Hypoid
Axle type ..... Full floating
Lube capacity ..... 41 pints (19,3 liters)

Drive axle ratio

Allison Transmission	I-Shift transmission
3.58:1 option	2.50:1
3.91:1 standard	

ZF A132 Drive Axle

Make and model ..... ZF A132
Drive track ..... 76.7 inches (1 949 mm)
Gear type ..... Hypoid
Axle type ..... Full floating
Oil fill quantity ..... 19.5 quarts (39 pints)
Ratio 3.54

TAG AXLE

Make ..... Prevost
Rear track ..... 83.6 inches (2 124 mm)
Axle type ..... Forged

CONTENTS

1. TORQUE TABLES 4

1.1 BRAKE AND AIR SYSTEM 4
1.2 MISCELLANEOUS TORQUES 6

2. AIR SYSTEM 7

3. BRAKES 7

4. AIR RESERVOIRS 7

4.1 MAINTENANCE 7
4.1.1 Wet Air Tank 8
4.1.2 Primary Air Tank 8
4.1.3 Accessory Air Tank 8
4.1.4 Secondary Air Tank 8
4.1.5 Kneeling Air Tank 9
4.1.6 I-Shift Transmission Air Tank 9
4.1.7 Optional Parking Brakes Overrule Air Tank 9
4.2 PING TANK 9

5. AIR SYSTEM EMERGENCY FILL VALVES 9

6. ACCESSORY AIR FILTER 9

6.1 ACCESSORY AIR FILTER ELEMENT 10
6.2 CLEANING 10

7. AIR GAUGES (PRIMARY, SECONDARY AND ACCESSORY) 10

8. AIR FILTER/DRYER 10

8.1 REPLACING THE DESICCANT CARTRIDGE 11
8.2 AIR LEAK CHECK / WARNING 11

9. AIR LINES 11

9.1 FLEXIBLE HOSES 12
9.2 NYLON TUBING 12
9.3 AIR LINE OPERATING TEST 12
9.4 AIR LINE LEAKAGE TEST 12
9.5 MAINTENANCE 12

10. PRESSURE REGULATING VALVES 12

10.1 MAINTENANCE 13
10.2 PRESSURE SETTING PROCEDURE 13

11. AIR COMPRESSOR 13

11.1.1 Compressor Removal and Installation 14

12. EMERGENCY / PARKING BRAKE CONTROL VALVE (PP-1) 14

13. OPTIONAL EMERGENCY / PARKING BRAKE OVERRULE CONTROL VALVE (RD-3) 14

14. FLIP-FLOP CONTROL VALVE (TW-1) 15

15. DUAL BRAKE VALVE (E-8P) 15

15.1 BRAKE PEDAL ADJUSTMENT 15

15.1.1 Maintenance 15

16. STOPLIGHT SWITCHES 15

17. PARKING BRAKE ALARM SWITCH 16

18. BRAKE RELAY VALVE (R-14) 16

19. ANTILOCK TRACTION RELAY VALVE (ATR-6) 16

20. SPRING BRAKE VALVE (SR-7) 16

21. PRESSURE PROTECTION VALVE (PR-4) 17

22. SHUTTLE-TYPE DOUBLE CHECK VALVE (DC-4) 17

23. EMERGENCY DOOR OPENING VALVES 17

23.1 INTERIOR VALVE MAINTENANCE 17

24. AIR HORN VALVE 18

25. AIR SYSTEM TROUBLESHOOTING 18

26. BRAKE OPERATION 18

27. AIR BRAKES 18

27.1 INSPECTION POINTS 19

27.2 PAD REPLACEMENT - ADJUSTER 20

27.3 CHECKING DISC BRAKE PADS 20

27.3.1 Drive Axle – Equipped With a Solid Rubber Bushing and Exposed Guide Pin 21

27.3.2 Front and Tag Axle – Equipped With Visual Wear Indicator 21

27.4 BRAKE PADS AND DISCS MINIMAL TOLERANCE LIMITS 22

27.4.1 Brake Pads 22

27.4.2 Brake Disc 22

27.5 CALIPER RUNNING CLEARANCE 23

28. SAFE SERVICE PROCEDURES 23

29. AIR BRAKE TROUBLESHOOTING 24

30. BRAKE AIR CHAMBER 25

30.1 MAINTENANCE 26

30.2 EMERGENCY/PARKING BRAKE MANUAL RELEASE 26

30.3 BRAKE CHAMBER REMOVAL 26

30.4 BRAKE CHAMBER INSTALLATION 27

30.5 BRAKE CHAMBER DISASSEMBLY 27

31. ANTI-LOCK BRAKING SYSTEM (ABS) 27

31.1 TROUBLESHOOTING AND TESTING 28

31.2 ABS COMPONENTS 28

31.3 BENDIX EC-60 ADVANCED CONTROLLER 28

31.4 SENSORS 28
31.4.1 Spring clip.....29

32. BENDIX AUTOMATIC TRACTION CONTROL (ATC) – ELECTRONIC STABILITY CONTROL (ESC) 30

32.1 COMPONENTS.....30
32.1.1 The EC-60™ controller's ABS function utilizes the following components:.....30
32.1.2 The EC-60™ controller's ATC function utilizes the following components:.....30
32.1.3 The EC-60™ controller's ESC/RSP function utilizes the following components:.....30
32.2 BENDIX M-40QR PRESSURE MODULATOR VALVE.....30
32.3 ADVANCED ABS WITH ELECTRONIC STABILITY CONTROL (ESC).....31
32.4 BENDIX® SAS-70 STEERING ANGLE SENSOR 32
32.4.1 Removal of the steering angle sensor.....32

33. FITTING TIGHTENING TORQUES..... 33

34. SPECIFICATIONS..... 34

1. TORQUE TABLES

1.1 BRAKE AND AIR SYSTEM

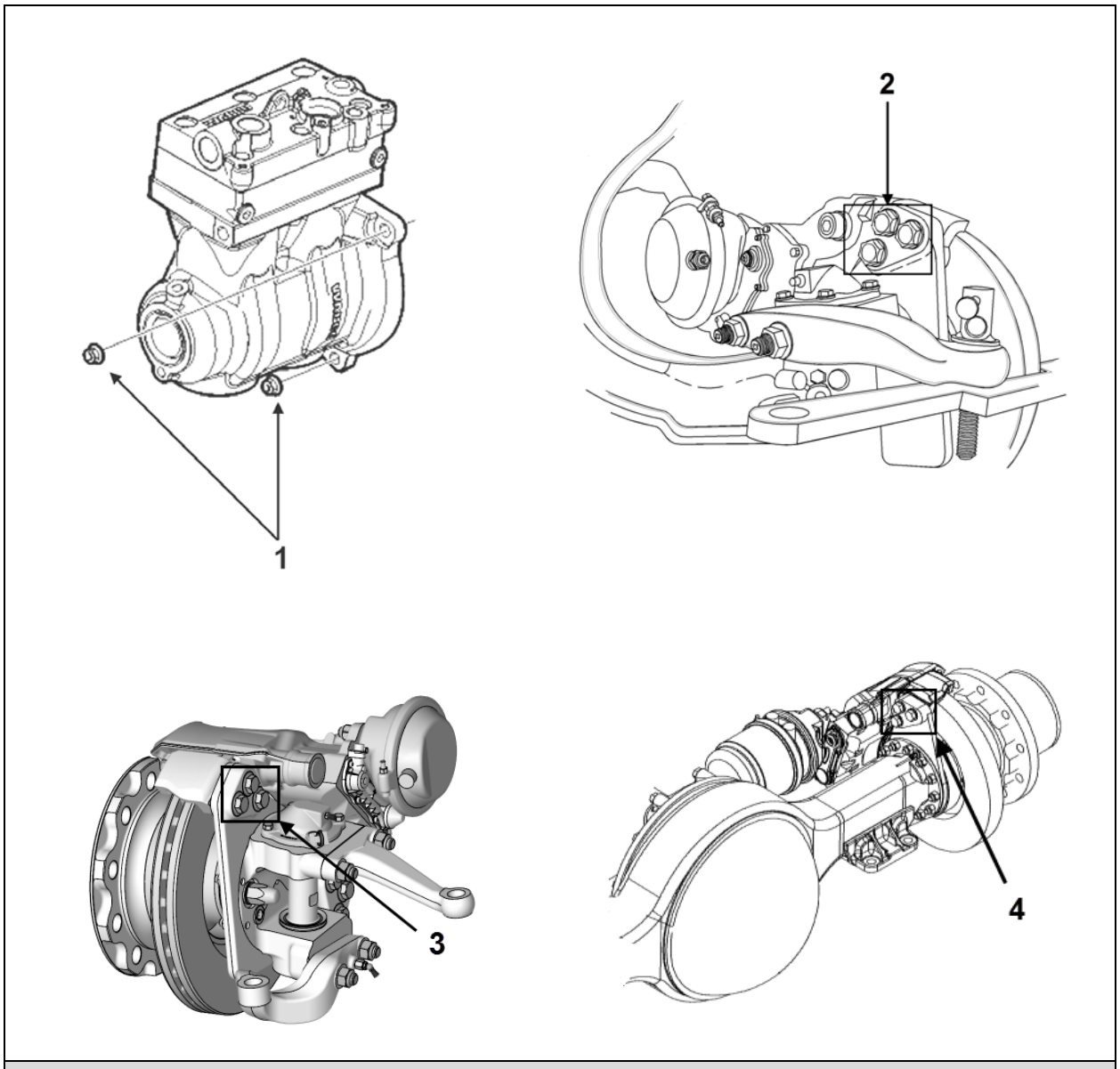

BRAKE AND AIR SYSTEM		
No	DESCRIPTION	TORQUE
1	Compressor flange mounting nuts	63 lb-ft (85 Nm)
2	Front IFS suspension caliper mounting bolts	405-495 lb-ft (549-671 Nm)
3	Front I-beam caliper mounting bolts	350-393 lb-ft (475-533 Nm)
4	Meritor drive axle & Tag axle caliper mounting bolts	405-495 lb-ft (549-671 Nm)

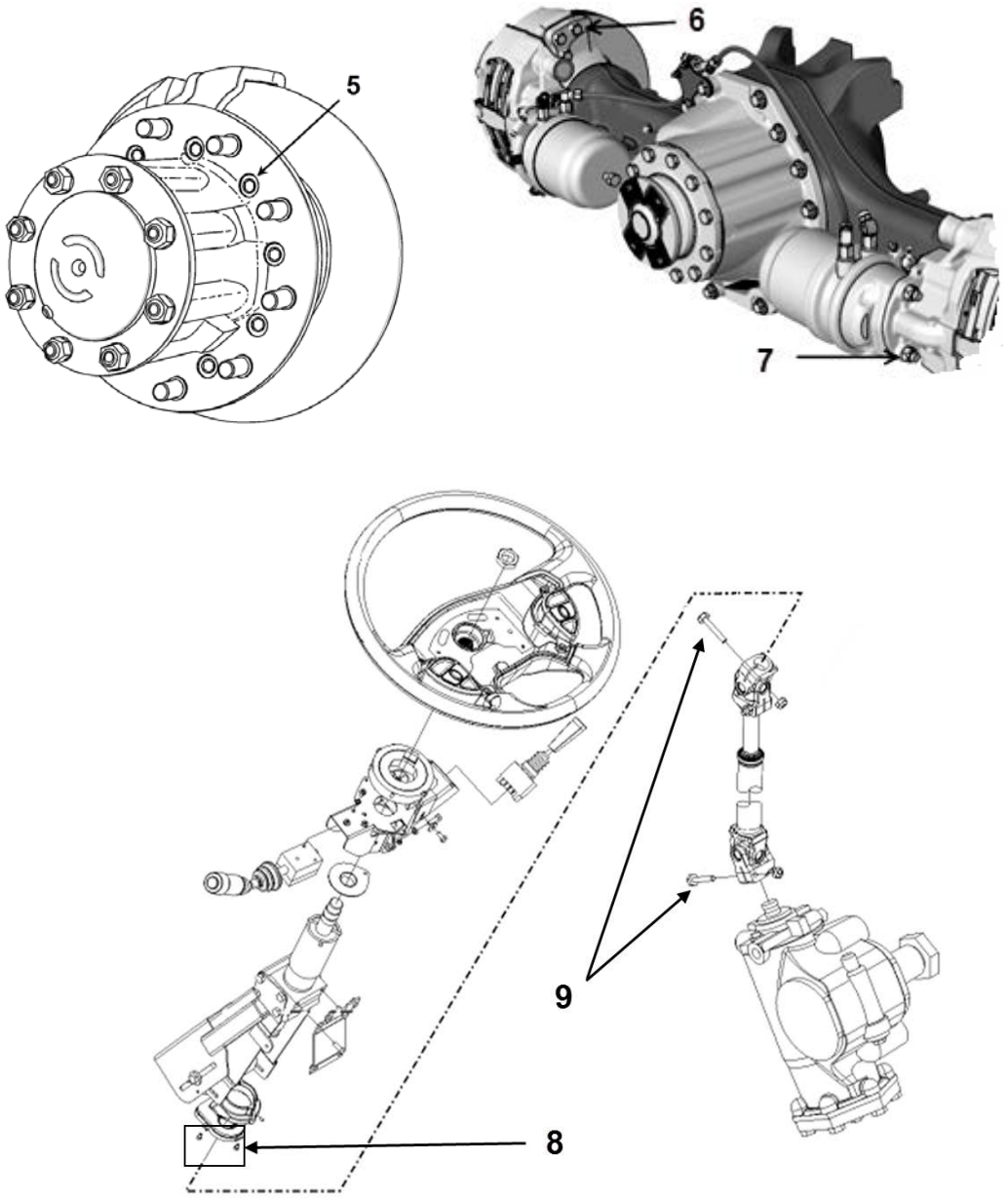

BRAKE AND AIR SYSTEM		
No	DESCRIPTION	TORQUE
5	Meritor hub to disc cap screws	110-165 lb-ft (149-224 Nm)
6	ZF drive axle caliper mounting bolts	200 lb-ft (271 Nm)
7	ZF drive axle brake chamber mounting bolts	120-150 lb-ft (163-203 Nm)
8	Steering angle sensor mounting screws	9-12 lb-in (1-1 Nm)
9	Steering column U-joint bolts	48 lb-ft (65 Nm)

1.2 MISCELLANEOUS TORQUES

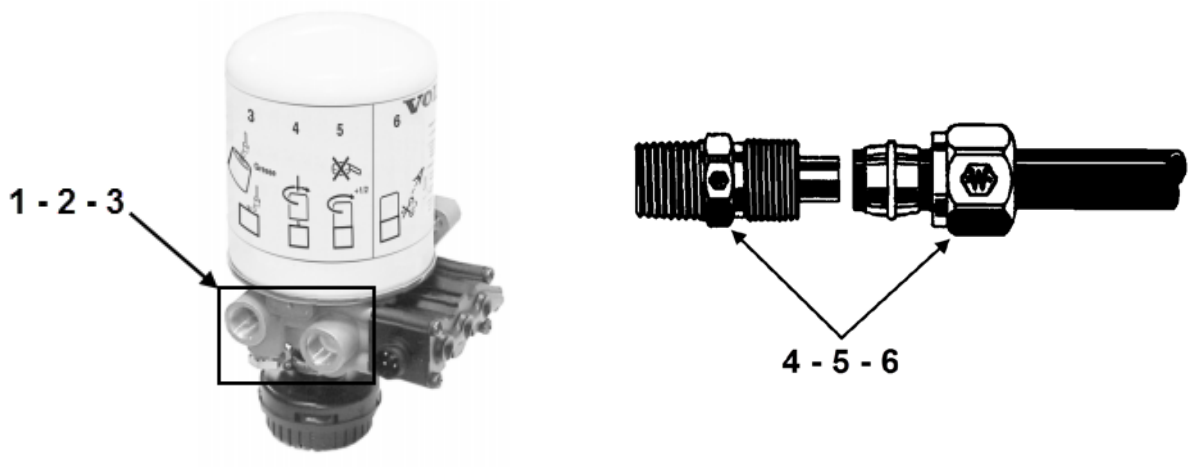

MISCELLANEOUS TORQUES		
No	DESCRIPTION	TORQUE
1	Air filter/dryer connections - 3/8”-18 NPTF	12 lb-ft (16 Nm)
2	Air filter/dryer connections - 1/4”-18 NPTF	12 lb-ft (16 Nm)
3	Air filter/dryer connections - 1/2”-14 NPTF	37 lb-ft (50 Nm)
4	1/4" NTA-Type Plastic Tubing Connection	3 turns*
5	3/8” to 1/2" NTA-Type Plastic Tubing Connection	4 turns*
6	5/8” to 3/4" NTA-Type Plastic Tubing Connection	3 ½ turns*

* Hand tight first then tighten using wrench the number of turns specified in table**.**

2. AIR SYSTEM

The basic air system consists of an air compressor, reservoirs, valves, filters and interconnecting lines and hoses. It provides a means for breaking, operating controls and accessories and suspension (refer to Section 16, *"Suspension"*, for complete information on suspension description and maintenance). An air system schematic diagram is annexed in the technical publications box provided with the vehicle for better understanding of the system.

3. BRAKES

This vehicle uses both the service brake and emergency/parking brake. The service brake air system is divided into two independent circuits to isolate front brakes from rear brakes, thus providing safe braking in the event that one circuit fails. Front axle brakes operate from the secondary air system, while brakes on both the drive axle and tag axle operate from the primary air system.

NOTE
The tag axle service brake operates only when the axle is in normal ride position (loaded and down).

Furthermore, the brake application or release, which is speed up by pneumatic relay valves (R-14), will start with the rear axles and will be followed by the front axle, thus providing uniform braking on a slippery road. The vehicle is also equipped with an Anti-Lock Braking System (ABS), which is detailed later in this section.

The drive is provided with spring-loaded emergency/parking brakes, which are applied automatically whenever the control valve supply pressure drops below 60 psi (413 kPa). The optional emergency/parking brake overrule system allows the driver to release spring brakes, and to move the vehicle to a safe parking place, such as in the case of a self-application of these brakes due to a drop in air pressure.

4. AIR RESERVOIRS

The air coming from the air dryer is first forwarded to the wet air tank, then to the primary (for the primary brake system), secondary (for the secondary brake system), and accessory (for the pneumatic accessories) air tanks (Figure 1 and Figure 2).

Additional air reservoirs may be installed on the vehicle: the kneeling air tank, emergency/ parking brake overrule air tank and I-Shift transmission air tanks.

4.1 MAINTENANCE

Ensure that both the accessories and the wet air tanks are purged during pre-starting inspection. In addition, it is good practice to purge these following the information below.

MAINTENANCE

Air tanks

A recommended purge using the bottom drain valve should be done at the intervals specified by the Lubrication And Servicing Schedule in Section 24: LUBRICATION & SERVICING.

It is important to empty the tanks completely to ensure that water and moisture are totally evacuated from the tank.

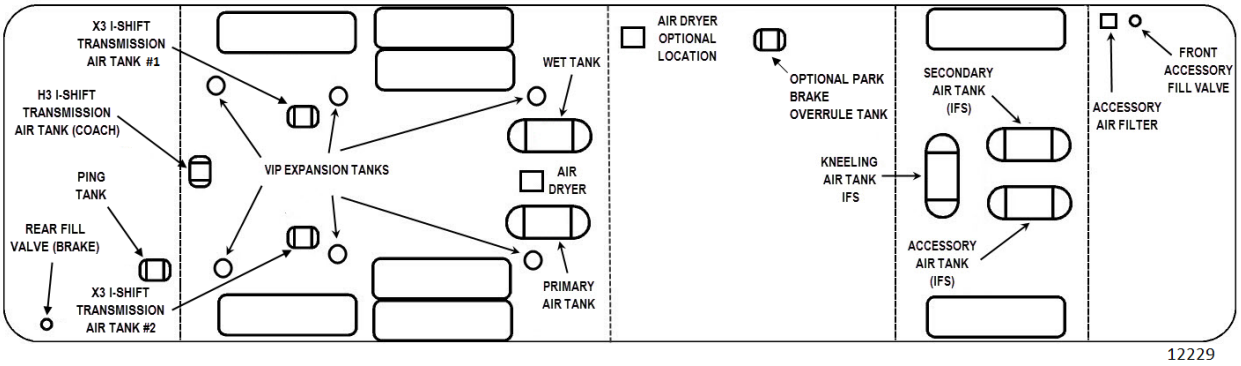

FIGURE 1: INDEPENDENT SUSPENSION AIR TANKS LOCATIONS (SHOWN WITH VIP EXPANSION TANKS)

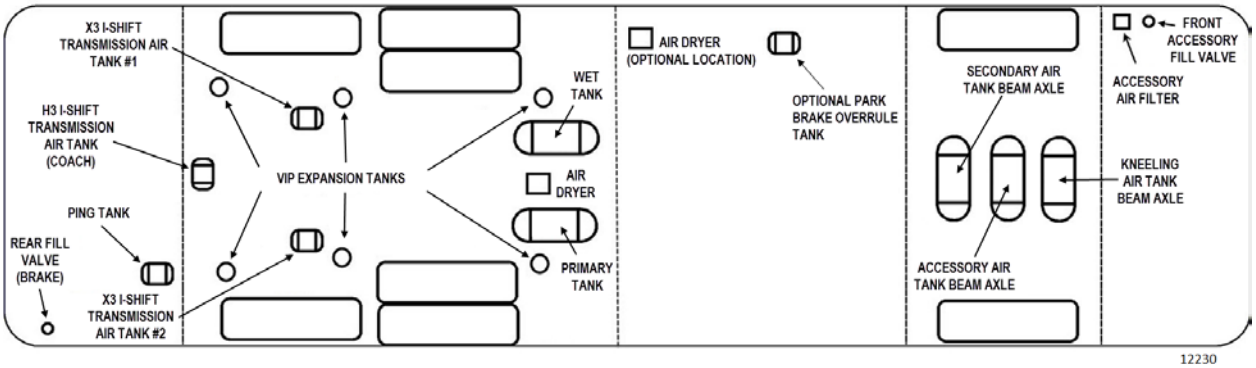

FIGURE 2: BEAM AXLE SUSPENSION AIR TANKS LOCATIONS (TYPICAL WITH VIP EXPANSION TANKS)

4.1.1 Wet Air Tank

This reservoir located in front and above the L.H. wheel of the drive axle in the rear wheel housing, is provided with a bottom drain valve.

4.1.2 Primary Air Tank

This reservoir is located above the tag axle, and is provided with a bottom drain valve. Accessory Air Tank

4.1.3 Accessory Air Tank

The accessory air tank is installed at the ceiling of spare wheel compartment and is provided with a bottom drain valve.

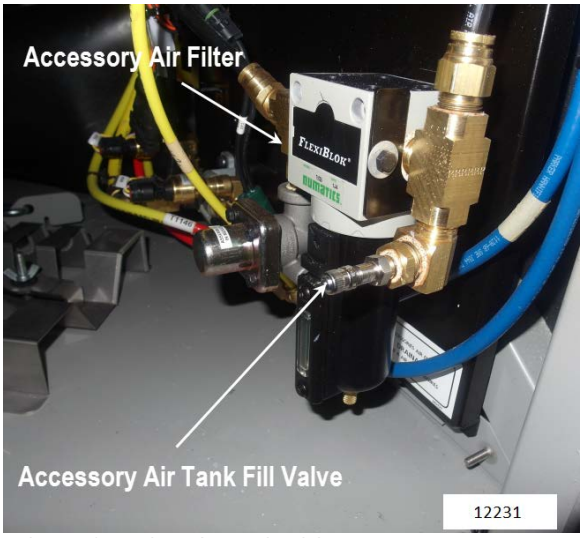

FIGURE 3: FRONT SERVICE COMPARTMENT

4.1.4 Secondary Air Tank

Located in the front left wheel housing for the independent suspension equipped vehicles, this tank is set behind the front axle and the accessory air tank for the beam axle equipped

vehicles. Tank is provided with a bottom drain valve.

4.1.5 Kneeling Air Tank

The kneeling air tank is installed on vehicles equipped with the Kneeling or Hi/Low-Buoy options. It is located behind the front suspension arms for independent front suspension vehicles and in front of the front axle on vehicles equipped with a beam suspension, tank is provided with a bottom drain valve.

4.1.6 I-Shift Transmission Air Tank

Installed on vehicles equipped with this option, these reservoirs are located in the rear tag axle wheel housing on X Series vehicles, a single tank located between the tag wheels is provides on H Series vehicles. All are provided with a bottom drain valve.

4.1.7 Optional Parking Brakes Overrule Air Tank

On vehicle equipped with this option, the parking brakes overrule air tank is installed at the ceiling of the rear baggage compartment, on the L.H. side.

4.2 Ping Tank

The ping tank is located next to the power steering pump reservoir in the engine compartment; it is accessible through the engine compartment R.H. side door. This tank is used to dissipate heat and to reduce noise produced by the air compressor cycling on and off.

5. AIR SYSTEM EMERGENCY FILL VALVES

All vehicles come equipped with two emergency fill valves that enable system pressurization by an external source such as an air compressor.

The rear valve is located in the engine compartment and is accessible from engine compartment R.H. side door (FIGURE 6).

CAUTION

Maximum allowable air pressure is 140 psi (965 kPa). Air filled through these two points will pass through the standard air filtering system provided by Prevost. Do not fill system by any other point on the system.

The front valve is located in the front electrical and service compartment close to R.H. side of doorframe (Figure 3).

These two air system emergency fill valves are fitted with the same valve stems as standard tires, and can be filled by any standard external air supply line.

The rear air system emergency fill valve will supply air to wet air tank, primary air tank, secondary air tank and accessories air tank for brakes, suspension and accessories systems while the front fill valve will supply air to accessories only.

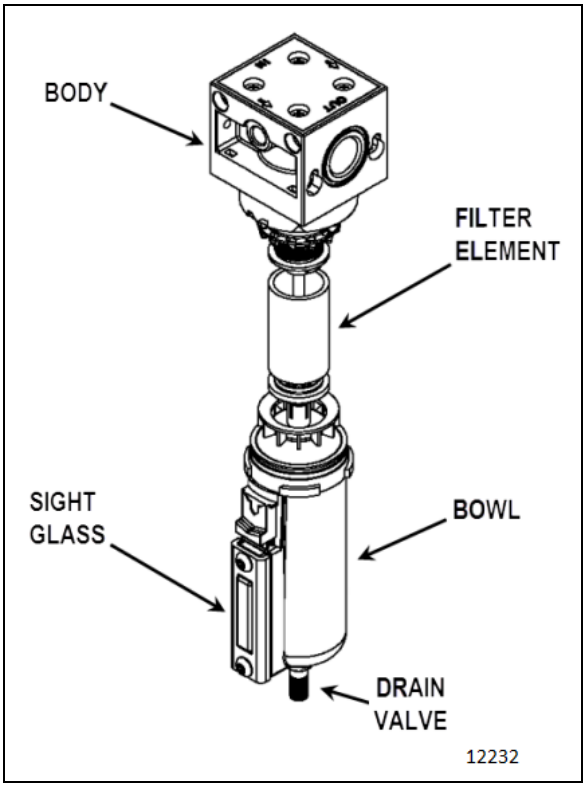

FIGURE 4: ACCESSORY AIR FILTER

6. ACCESSORY AIR FILTER

This filter is located inside the front electrical and service compartment (Figure 3 and FIGURE 4). Its main function consists in filtering the air supplied to the accessory air system, when connected to an external supply line. Ensure filter is purged whenever supplying the system with an external air line and at least every 12,500 miles (20 000 km).

To purge, open drain valve (FIGURE 4**)** let the moisture come out, then close the drain valve.

6.1 ACCESSORY AIR FILTER ELEMENT

MAINTENANCE

Accessory air filter element

Replace the accessory air filter element at the intervals specified by the Lubrication And Servicing Schedule in Section 24: LUBRICATION & SERVICING or whenever differential pressure exceeds 15 psi (105 kPa) between filter inlet and outlet ports. Check condition of all three O-rings for damage. Replace when necessary (FIGURE 4).

6.2 CLEANING

Clean filter body and bowl with a warm water and soap solution. Rinse thoroughly with clean water.

Blow dry with compressed air making sure the air stream is moisture free and clean. Pay particular attention to the internal passages. Inspect all parts for damage and replace if necessary.

7. AIR GAUGES (PRIMARY, SECONDARY AND ACCESSORY)

The air pressure gauges, located on the dashboard (see *"Operator's Manual" or "Owner's Manual"*), are fed from pressure transducer installed on the DC-4 double check valve, located on the pneumatic accessories panel in the front service compartment.

The latter is connected to the air lines running from the primary and secondary air tanks, as shown on the pneumatic system diagram provided with the vehicle. The accessory air gauge is connected to the front pneumatic panel in the front compartment of the vehicle. The vehicle should never be set in motion until the buzzer alarm and warning lights turn off, i.e. when air pressure registers at least 60 psi (414 kPa). Moreover, if pressure drops below 60 psi (414 kPa), the *"Low air pressure"* warning lights will turn on, and the *"Low air pressure"* buzzer will sound. Stop the vehicle immediately, determine and correct the cause(s) of pressure loss. Check the gauges regularly with an accurate test gauge. Replace the gauge with a new unit if there is a difference of 4 psi (27 kPa) or more in the reading.

8. AIR FILTER/DRYER

TORQUE for connections:

3/8"-18 NPTF= **12 lb-ft** (16 Nm)

1/4"-18 NPTF= **12 lb-ft** (16 Nm)

1/2"-14 NPTF= **37 lb-ft** (50 Nm)

Safety valve dynamic pressure: 290 psi.

FIGURE 5: AIR FILTER DRYER

The electric air dryer is controlled by the multiplex system. If the air dryer should for some reason become powerless, it will cease to function and the desiccant will become *wet through*, while the compressor will continue to charge. Relief is provided via the safety valve.

By using the information from the vehicle electronic system, the air dryer and compressor control is optimized, so that drying of the air is guaranteed and fuel consumption is reduced. This will be noticed as a different compressor start/stop pattern.

The air dryer has a built-in function to prevent freezing or blockage. The function provides temporary relief (air dryer blow clean) at engine shut down. This function eliminates the problem of freezing on a stationary vehicle.

An additional function at vehicle start-up prevents the compressor from charging air during engine cranking and start-up.

The air filter/dryer is located in front of rear wheel housing above drive axle. Its purpose is to remove moisture that could damage the air system before the air enters the system reservoir. The air filter/dryer also filters the air to remove dirt, compressor oil, and other contaminants that can damage the system. Change cartridge every 100,000 miles (160 000 km) or once every two years, whichever comes first.

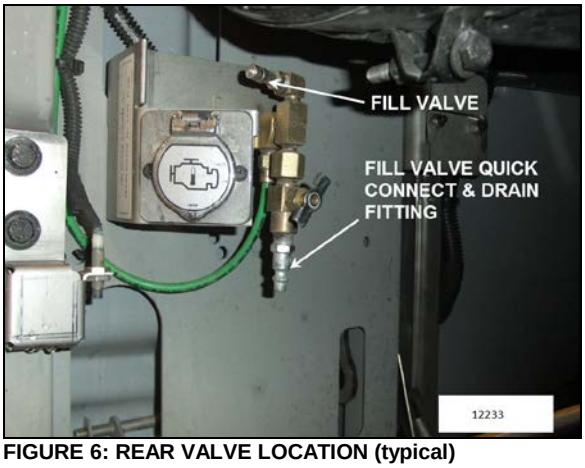

FIGURE 6: REAR VALVE LOCATION (typical)

The air dryer and wet tank may be purged simultaneously for maintenance purposes using the drain cock on the emergency air system fill valve located in the engine compartment and accessible through the engine compartment R.H. side door (FIGURE 6).

For more information on Meritor Wabco Air dryer, refer to the following manuals included on your Technical Publications USB flash drive:

- *Meritor Wabco System Saver Series Single Cartridge Air Dryers Maintenance Manual 34*

8.1 REPLACING THE DESICCANT CARTRIDGE

To replace the desiccant cartridge:

1. Release air dryer pressure by opening the air dryer drain valve (FIGURE 6).
2. Loosen and remove the old cartridge. Use strap wrench if necessary.
3. Remove and discard O-ring from dryer base.
4. Inspect and clean seal seat. Repair any minor damage.
5. Lubricate and install new O-ring on stem.
6. Lubricate cartridge seal.
7. Thread replacement cartridge onto the base until the seal touches the base. Then, tighten the cartridge ONE additional turn. DO NOT OVERTIGHTEN.

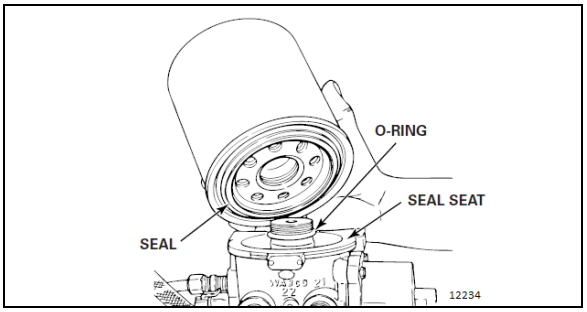

MAINTENANCE

Air dryer cartridge

Replace the air dryer desiccant cartridge at the intervals specified by the Lubrication And Servicing Schedule in Section 24: LUBRICATION & SERVICING

8.2 AIR LEAK CHECK / WARNING

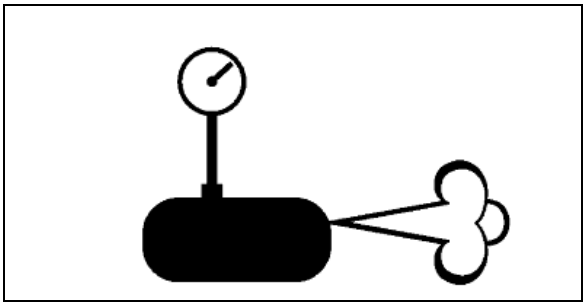

FIGURE 7: AIR LEAK CHECK / WARNING ICON 12228

This icon may appear in the DID if the compressor is charging abnormally which is usually an indication of an air leak.

9. AIR LINES

Nylon-reinforced tubing and flexible hoses are used to connect the units in the pneumatic system, including air brake system, suspension system and accessory systems such as the entrance door, air horns, etc. Furthermore, the nylon tubing is color coded to ease identification. Refer to the following table for the complete color identification code. Service instructions for each type of air line are also provided under the applicable headings.

Color	Circuit
Red	Secondary
Green	Primary, Supply/Delivery
Yellow	Parking Brake
Blue	Suspension
Black	Accessory
Brown	Trailer Brake

9.1 FLEXIBLE HOSES

A flexible hose is used normally where it is impractical to use copper or nylon tubing due to constant flexing during operation, such as brake chamber hoses or belt tensioner air cylinder hoses. Hose connections should be tested for leakage at least every 6,250 miles (10 000 km) or twice a year, whichever comes first and tightened or replaced if necessary. Any hose, which is chafed, worn or kinked, should be replaced.

Teflon-braided stainless steel hoses used in the engine compartment must be replaced only with similar hoses.

9.2 NYLON TUBING

Nylon tubing is used for air lines in areas where usage of this material is suitable. Nylon tubing is flexible, durable, and weather resistant. When replacing an air line, use nylon tubing only where it has been used previously.

Nylon air lines must never be routed in areas where temperature could exceed 200°F (93°C).

CAUTION

Nylon air lines should be used to replace existing nylon lines only, and must comply with the color identification code to ease pneumatic system troubleshooting.

9.3 AIR LINE OPERATING TEST

If any trouble symptom such as slow brake application or slow brake release indicates a restricted or clogged air line, disconnect the suspected tube or hose at both ends and blow through it to clear the passage.

Inspect tubing and hose for partial restriction that may be caused by dents or kinks. If such a condition is found, the tubing or hose should be replaced.

9.4 AIR LINE LEAKAGE TEST

With air system fully charged and the brakes applied, coat all tubing and hose connections with a soapy solution to check for air leakage. No leakage is permitted. Leakage can sometimes be corrected by tightening the connection. If this fails to correct the leakage, new fittings, nylon tubing, copper tubing, Teflon-braided stainless steel and flexible hoses must be installed as applicable.

9.5 MAINTENANCE

Inspect all lines for cuts, swelling, kinks or other damage or deterioration. Check for lines being pinched by other components. Retaining clips and ties must be in place.

Any support or bracket should be in good condition and mounted firmly in position. Hose spring guards should be in usable condition and not distorted. Particular attention should be given to long lines. Any supporting component (clips, ties, grommets, etc.) must be secured to prevent against unnecessary vibration and eventual loosening of connection. Any detected leak should be repaired. Be sure nylon lines are not near areas of intense heat. Check for any missing grommets or loose material where chafing or cutting may occur. Replace with new material as required. In general, lines should be securely located in position and free from any binding condition, which would hinder air flow.

10. PRESSURE REGULATING VALVES

There is one pressure regulator for small A/C compressor and accessories alternator drive belt tensioner, and an optional one installed on vehicles equipped with the world transmission output retarder.

The belt tensioner pressure regulating valve is located in the engine compartment above the engine air filter and is used to limit the air pressure in belt tensioners to 30 ± 3 psi (207 ± 20 kPa) for vehicles equipped with a single belt and 45± 3 psi (310± 20 kPa) for vehicles with dual belts arrangement (Figure 8).

The optional regulator is located in the engine compartment, on the engine cradle R.H. side (accessible through the engine R.H. side door). It is used for transmission retarder and should be adjusted to 80 +0/-5 max. psi (552 max. kPa).

	Air Pressure (psi)	Air Pressure (kPa)
Belt Tensioner	30 (Single belt) 45 (Dual belts)	207 310
Retarder	80	552

10.1 MAINTENANCE

Every 100,000 miles (160 000 km) or once every two years, whichever comes first, disassemble the pressure regulating valve and wash all metal parts in a cleaning solvent (Figure 8). Examine the diaphragm; if cracked, worn or damaged, replace with a new one. If the valve is excessively grooved or pitted, it should be replaced. Replace any other part that appears worn or damaged. After reassembly, adjust to the specified pressure setting and check for air leakage.

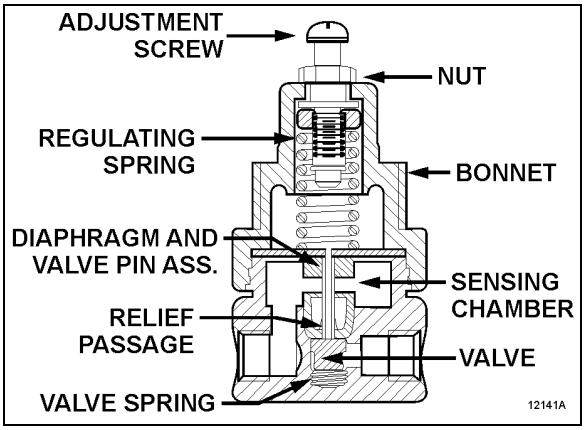

FIGURE 8: AIR PRESSURE REGULATING VALVE

10.2 PRESSURE SETTING PROCEDURE

Remove the dust cap from the pressure check port (Figure 9). Attach a pressure gauge at this port and check the pressure reading. If the pressure reading is incorrect, adjust as follows:

8. Loosen the locking nut; turn the adjustment screw counterclockwise to decrease pressure by approximately 10 psi (70 kPa) below the required pressure.
9. Turn the adjustment screw clockwise to increase the pressure slowly until the required pressure setting is reached. Tighten the locking nut.
10. Remove pressure gauge and replace dust cap on the pressure check port.

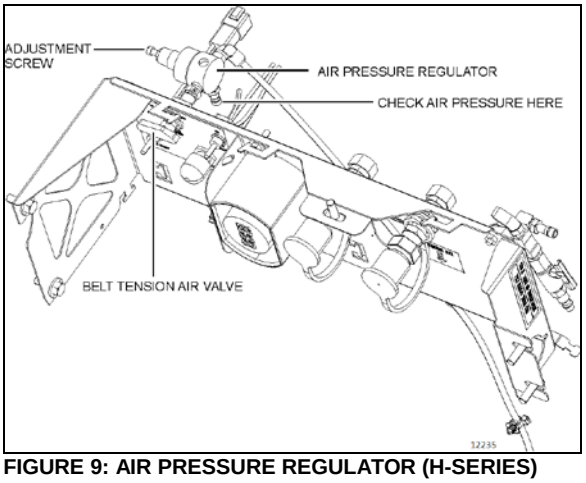

FIGURE 9: AIR PRESSURE REGULATOR (H-SERIES)

11. AIR COMPRESSOR

The Wabco System Saver 636 Twin Cylinder air compressor is located on the alternator side of the engine, at the flywheel end (Figure 10). Its function is to provide and maintain air under pressure to operate devices in brake and air systems.

The compressor is driven by the ring gear, and is water cooled. Engine coolant is fed to the compressor through a flexible hose tapped into the block water jacket and connected to the rear of the compressor. Coolant returns from the top of the compressor (governor side) through a flexible hose to the engine pump.

The air is taken from the air intake manifold and entered in the top of the compressor. The compressed air is pushed into the discharge line located on side of the compressor, which sends air to the air dryer. Lubricating oil is supplied to the compressor by a line from the cylinder block oil gallery connected to the air compressor. Lubricating oil returns to the engine crankcase through the air compressor drive assembly.

Maintenance and repair information on the Wabco 636 Twin Cylinder air compressor is supplied in the applicable booklet annexed at the end of this section.

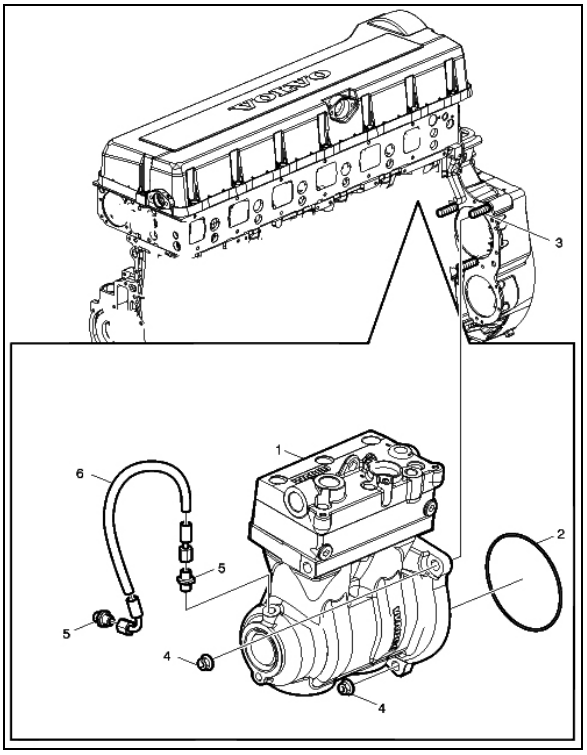

FIGURE 10: AIR COMPRESSOR LOCATION 03061

Item	Description	Notes
1	Air Compressor	Wabco 636
2	O-ring	
3	Stud (3)	M12
4	Flange Nut (3)	
5	Nipple (2)	
6	Hose Assembly	

11.1.1 Compressor Removal and Installation

1. Exhaust compressed air from air system by opening the drain valve of each air tank.
2. Drain the engine cooling system. See Section 5: "*Cooling System*".
3. Access the compressor by the engine R.H. side compartment. Identify and disconnect all air, coolant and oil lines from the compressor assembly.
4. Remove the three compressor flange mounting nuts.
5. Slide air compressor rearward to disengage the hub from coupling. Remove the air compressor.

Remove and retain the oil supply tube that runs between the compressor and the engine

Reverse removal procedure for installation.

12. EMERGENCY / PARKING BRAKE CONTROL VALVE (PP-1)

A push-pull control valve mounted on the L.H. lateral console is provided for parking brake application or release. The spring brakes are self-actuated whenever the control valve supply pressure drops below 60 psi (414 kPa). In the UP position, brakes are ON. In the DOWN position, brakes are RELEASED. On VIP Vehicles, a protective case around the knob prevents accidentally releasing the brakes.

FIGURE 11: PP-1 12142

Maintenance and repair information on this valve is supplied in the applicable booklet annexed to this section under reference number SD-03-3611.

Remove the valve the following way:

1. Drain the air system.
2. Access this valve by tearing out the finishing panel, which holds the controls in place (Figure 11).
3. Disconnect the air tubes.
4. Remove the retaining screws.
5. Service or replace the valve.
6. Installation is the reverse of removal.

13. OPTIONAL EMERGENCY / PARKING BRAKE OVERRULE CONTROL VALVE (RD-3)

A RD-3 control valve is used when the vehicle is equipped with the optional parking brake overrule system. In the case of self-application of

spring brakes due to a pressure drop, the brakes can be released by holding down this control valve. Maintenance and repair information on this valve is supplied in the applicable booklet annexed to this section under reference number SD-03-3611.

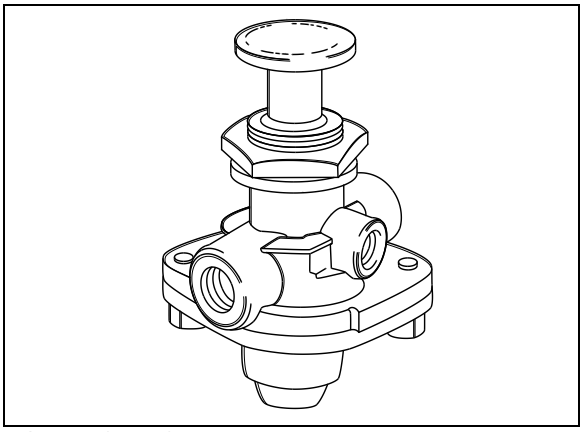

FIGURE 12: RD-3 12136

14. FLIP-FLOP CONTROL VALVE (TW-1)

A flip-flop control valve mounted on the L.H. lateral console is provided to unload and lift tag axle air springs. Another one controls the low-buoy system (coaches only). It is a manually operated "on-off" valve. Maintenance and repair information on this valve is supplied in the applicable booklet annexed to this section under reference number SD-03-3602.

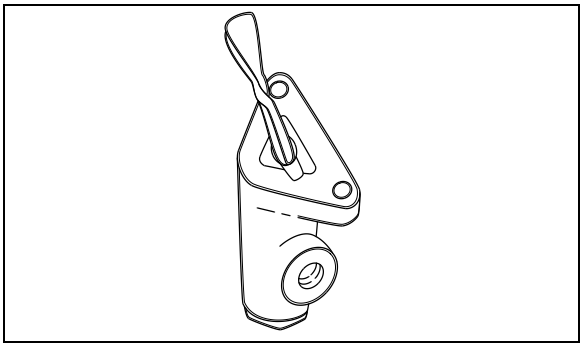

FIGURE 13: TW-1 12138

15. DUAL BRAKE VALVE (E-8P)

The E-8P dual brake valve is a floor mounted, foot-operated type brake valve with two separate supply and delivery circuits. This valve is located in the front service compartment (Figure 14).

15.1 BRAKE PEDAL ADJUSTMENT

After brake pedal replacement or repair, adjust the pedal to its proper position according to the following procedure:

1. Replace the linkage, loosen threaded rod lock nut and screw or unscrew the threaded adjustment rod in order to obtain a 45° brake pedal inclination (Figure 14).
2. Tighten threaded rod lock nut.

15.1.1 Maintenance

Maintenance and repair information on the E-8P dual brake application valve is supplied in the applicable booklet annexed to this section under reference number SD-03-830.

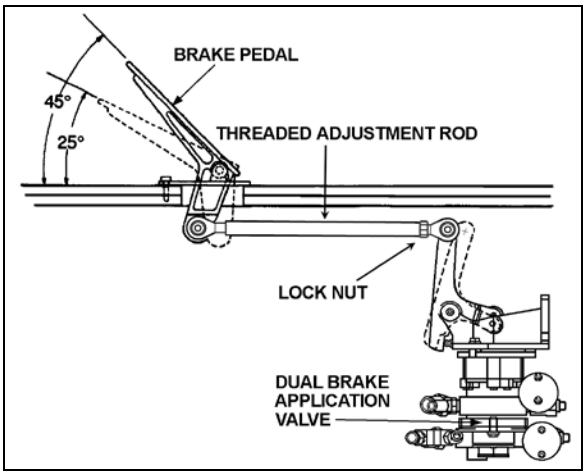

FIGURE 14: BRAKE PEDAL ADJUSTMENT

16. STOPLIGHT SWITCHES

Two Electro-pneumatic stoplight switches are mounted on the dual brake application valve (E-8P). The upper one is used for the primary air circuit while the lower one is used for the secondary air circuit. Both switches are connected in parallel and have the same purpose, i.e. completing the electrical circuit and lighting the stoplights when a brake application is made.

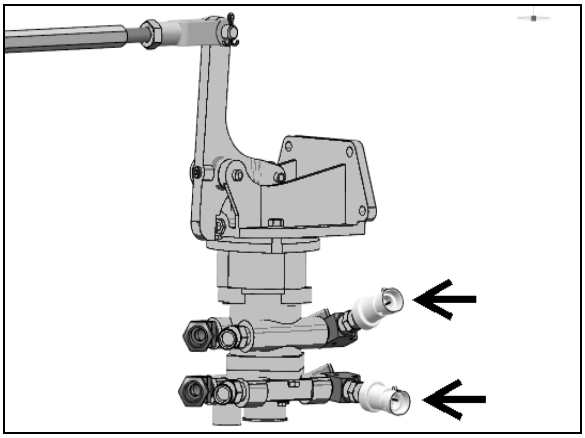

FIGURE 15: STOPLIGHTS PRESSURE SWITCH 12139

17. PARKING BRAKE ALARM SWITCH

Refer to the appropriate annexed booklet (Bendix, SL-5 Stop Light Switch; reference no. SD-06-2501).

The parking brake alarm uses the same switch as the stoplights. It is mounted on the spring brake valve and operates in conjunction with a NC relay to sound a warning alarm by completing the electrical circuit when the ignition key is turned OFF with parking brake released.

18. BRAKE RELAY VALVE (R-14)

The primary air system includes two brake relay valves being supplied by the dual brake valve, and which function is to speed up the application and release of the service brakes.

One R-14 valve located above the drive axle supplies the drive axle service brake air line, while the other R-14 valve supply the tag axle service brake air line and act as interlock valves. These valves are accessible from under the vehicle at the level of the tag axle. Maintenance and repair information on these valves is supplied in the applicable booklet annexed to this section under reference number SD-03-1064.

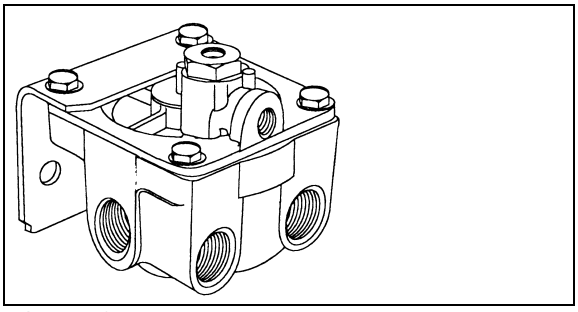

FIGURE 16: R-14 12207

19. ANTILOCK TRACTION RELAY VALVE (ATR-6)

The ATR-6 Antilock Traction Relay valve is a service relay valve fitted with a modified cover containing a control solenoid. It contains both air and electric components to provide the service braking and traction control (differential braking) as well as ESC advanced stability system ABS functions. It is located above the front axle.

Maintenance and repair information on these valves is supplied in the applicable booklet annexed to this section under reference number SD-13-4861.

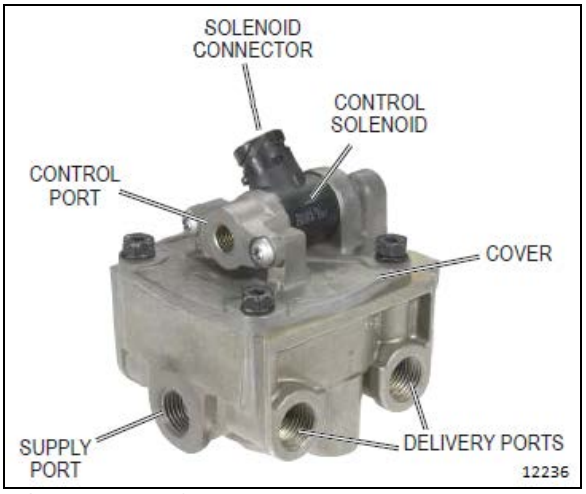

FIGURE 17: ATR-6

20. SPRING BRAKE VALVE (SR-7)

The spring brake valve is located above the drive axle. The SR-7 Modulating Valve is used in conjunction with a dual air brake system and spring brake actuator and performs the following functions:

- Provides a rapid application of the spring brake actuator when parking.
- Modulates the spring brake actuator application using the dual brake valve should a primary failure occur in the service brake system.
- Prevents compounding of service and spring forces.

Maintenance and repair information on the spring brake valve is supplied in the applicable booklet annexed to this section under reference number SD-03-9043.

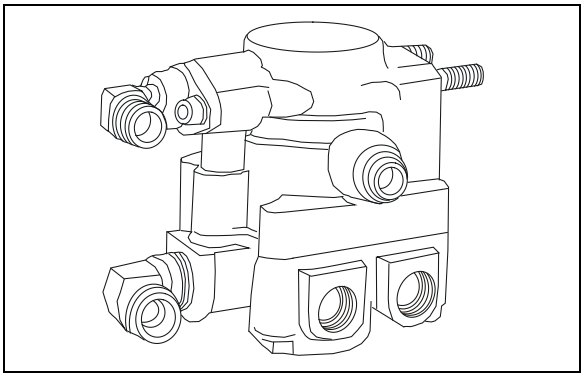

FIGURE 18: SR-7

21. PRESSURE PROTECTION VALVE (PR-4)

Maintenance and repair information on the pressure protection valve is supplied in the applicable booklet annexed to this section under reference number SD-03-2010.

The air system includes two pressure protection valves (Figure 19). One valve is installed on the manifold block, and insures at all times a minimum pressure of 70 psi (482 kPa) in the suspension air system in the event that a pressure drop occurs in either the suspension air system or accessory air system. This valve is located in the front service compartment beside the air filter.

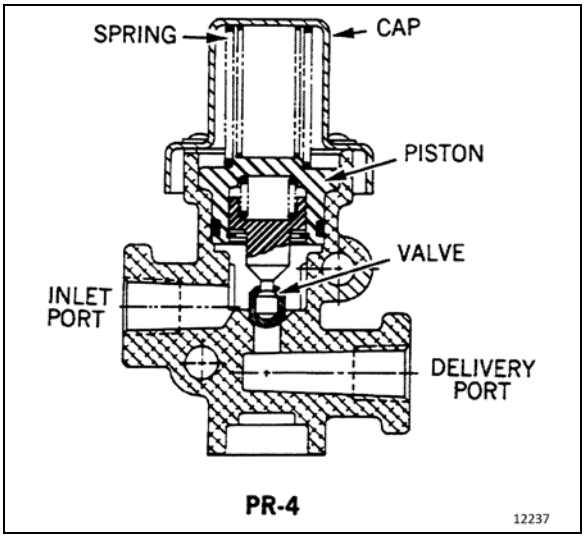

FIGURE 19: PR-4

The other valve is installed on the accessory air tank, and insures a minimum pressure of 70 psi (482 kPa) in the accessory air system in the event that a pressure drop occurs in either the suspension air system or braking air system (refer to Figure 1 and Figure 2 for accessory air tank location).

22. SHUTTLE-TYPE DOUBLE CHECK VALVE (DC-4)

Maintenance and repair information on the shuttle-type double check valve is supplied in the applicable booklet annexed to this section under reference number SD-03-2202.

The double check valve is located on the pneumatic accessories panel in the front service compartment. In the event of a pressure drop in either the primary or secondary system, this unit will protect the emergency /parking brake control valve and the intact portion of the air system from pressure loss.

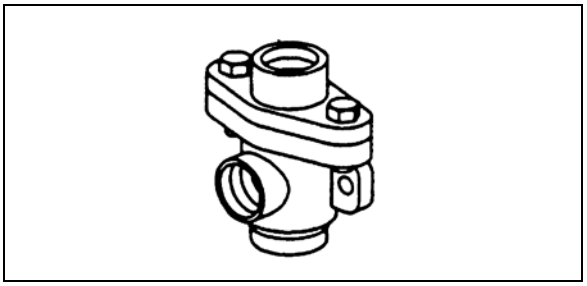

FIGURE 20: DC-4 12134

23. EMERGENCY DOOR OPENING VALVES

Two emergency door opening three-way valves are installed on passenger coaches. One is in the front service compartment, readily accessible. The other one is on the R.H. side lateral console, close to the entrance door. When used, the valve releases pressure in the door locking cylinder, thus allowing the door to be manually opened.

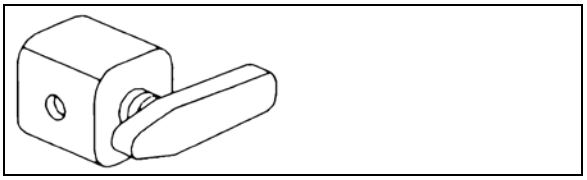

FIGURE 21: THREE WAY VALVE 12186

23.1 INTERIOR VALVE MAINTENANCE

When needed, this valve can be changed according to the following procedure:

1. Unscrew the front R.H. decorative panel in order to access the valve.
2. Unscrew and remove the valve handle.
3. Unscrew and remove the valve retaining ring.
4. Push the valve inside the console.

5. Disconnect the air tubes.
6. Reverse the procedure to install a new valve.

24. AIR HORN VALVE

The air horn solenoid valve is located in the front service compartment. The air horn activating button is on the center of the steering wheel. Refer to section 23 “ACCESSORIES” for more information.

25. AIR SYSTEM TROUBLESHOOTING

The following list has been designed to help in troubleshooting some of the most common problems in the air system and main causes. For air brakes troubleshooting, refer to “*Air Brakes Troubleshooting”* in this section. For more troubleshooting information, refer to the manufacturer's brochures annexed to this section.

Air pressure doesn't rise to, or doesn't maintain, a normal setting:

- Defective air gauge (registering incorrectly).
- Excessive leaking in air system.
- Reservoir drain cock open.
- Governor poorly adjusted or defective.
- Defective compressor.
- Worn compressor or excessive wear on piston and/or ring.

Air pressure rises to normal setting too slowly:

- Excessive leaking in air system.
- Clogged engine air cleaner.
- Faulty pressure sensor.
- Worn compressor or excessive wear on piston and/or ring.
- Engine speed too low.

Air pressure rises above a normal setting:

- Defective air gauge (registering incorrectly).
- Faulty sensor.
- Restriction in line between governor and compressor unloading mechanism.
- Air filter/dryer built-in governor poorly adjusted or defective.

Air pressure drops quickly when engine is stopped:

- Leaks in compressor discharge valve.
- Leaks in air lines.
- Leaks in air system valves.

26. BRAKE OPERATION

The vehicle braking system uses both service and parking air-operated brakes. The air system is divided into two independent circuits to isolate the front axle brakes and the rear axle brakes (drive and tag), thus providing safe brake operation in the event that one circuit of the system fails. The primary circuit is connected to the drive and tag axle brakes, while the secondary circuit is connected to the front axle brakes. The tag axle service brakes operate only when the axle is in the normal driving (loaded) position. The spring-type emergency brakes are mounted on the drive and tag axles, and will apply automatically if primary system pressure falls below 60 psi (413 kPa).

The optional parking brake override system can cancel the parking brakes, enabling the driver to move the vehicle to a safe parking place. On vehicles equipped with this option, operate the system by pushing down and holding the control knob located on the R.H. side of the driver’s seat (see *"Operator's Manual"* for more details).

Furthermore, brake application or release, which is sped up by a pneumatic relay valve (R-14), will start with the rear axles and be followed by the front axle, thus providing uniform braking on a slippery surface. The vehicle is also equipped with an Anti-lock Brake System (ABS), detailed later in this section.

Brake and air system maintenance consists of periodic inspections. Check all parts for damage and brake adjustment (refer to subsequent headings in this section for more details). Ensure all fasteners are tight (refer to “Torque Table” section for recommended tightening torques).

27. AIR BRAKES

DISC BRAKES

Knorr-Bremse SN7 disc brakes are used on all axles. The front and drive axle discs are

actuated by 24 inch^2 effective area air brake chambers (22 inch^2 for front solid beam axle), while on tag axle, the brake chambers have a 14 inch^2 effective area for service brake and a 16 inch^2 effective area for emergency/parking brakes. The *Knorr-Bremse SN7* brakes are supplied with automatic clearance (slack) adjusters as standard equipment for easier adjustment.

For detailed maintenance procedures, refer to ***Knorr-Bremse Pneumatic Disc Brake Y006471 Service Manual*** included on the Technical Publications USB flash drive and available on Prevost Technical Publications site.

27.1 INSPECTION POINTS

The following inspection points will ensure long-life and trouble-free operation of the disc brake.

MAINTENANCE

Moisture and dirt is the enemy. So, as a general recommendation, special care should be awarded to the condition of the various sealing elements, boots and caps to prevent any moisture or dirt intrusion in the caliper. Any missing or damaged sealing element, boot or cap should be replaced immediately.

MAINTENANCE

Check brake pad wear visually (this is independent of any electronic wear indicator fitted to the vehicle), visually check condition of the slack adjuster cap and sliding pin covers at the intervals specified by the Lubrication And Servicing Schedule in Section 24: LUBRICATION & SERVICING..

MAINTENANCE

With every pad replacement or once a year whichever comes first:

Check correct operation of the slack adjuster (see *Knorr-Bremse Pneumatic Disc Brake Y006471 Service Manual*).

Check the caliper running clearance

Check that caliper operates smoothly over its full range of movement.

Inspect all sealing elements (boots and caps).

At each pad replacement, make sure the caliper operates smoothly over its full range of movement. If the caliper shows the following signs, replacement of the guide sleeve (6c, fig 20), guide pin, screw (39) and cap is required.

- excessive or abnormal play
- movement along guide pins is hard or impossible (due to corrosion or dirt)
- A missing guide pin cap

Additionally, inspect the tappet and boot assemblies (13, Figure 22), the adjuster cap (37) and the sealing elements (9, 58) for correct fitting and condition as well as the caliper bearing in the area of the rubber bush/guide sleeve (6) (see *Knorr-Bremse Pneumatic Disc Brake Y006471 Service Manual*).

These frequencies are a minimum. Depending on the operating conditions of the vehicle, these inspections may need to be carried-out more frequently.

If an individual wheel has heated abnormally, Please refer to Bendix *BW7514_Single wheel end thermal overload checklist*. This checklist will help you through standard verifications required by the brake manufacturer before filing a warranty claim.

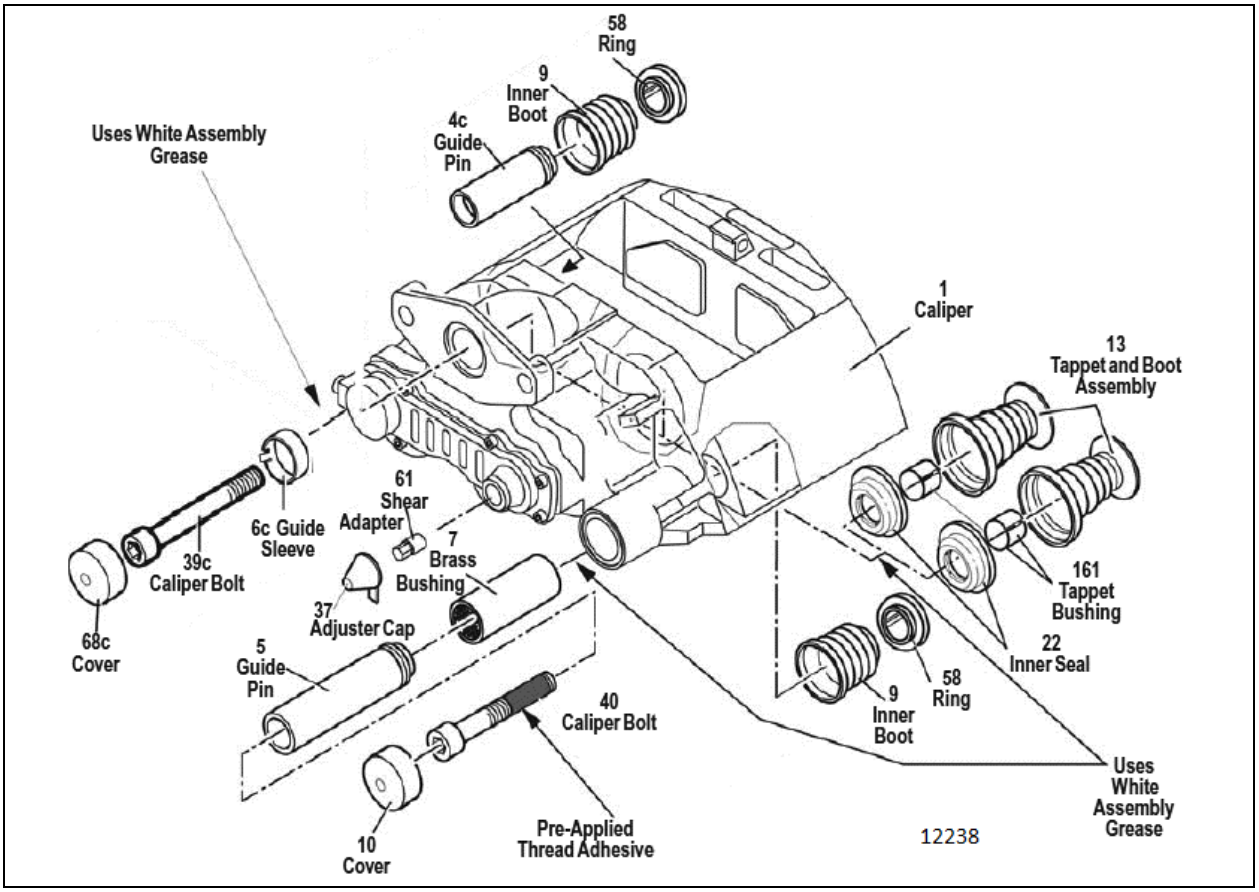

FIGURE 22: BRAKE COMPONENTS

27.2 PAD REPLACEMENT - ADJUSTER

Brake pad replacement procedure has slightly changed with the introduction of the new N2G slack adjuster on the vehicles.

After fitting new pads,

1. Turn the adjuster (thru shear adapter) clockwise ↻ until the pads come into contact with the disc.
2. Then turn back the adjuster counter-clockwise ↺ **three "clicks"** and check the caliper running clearance.

- *During the turning of the adjuster, you will notice a changed clicking noise. It is not caused by a defect of the mechanism.*
- *Also the "feel" during the rotation of the adjuster and the position of the spanner after the 3 clicks has changed.*

Depending on the age of the vehicle, it may have installed on it two different design levels of disc brake and so there may be 2 different clicking noises and final positions of the adjuster on the vehicle.

The full wording of the processes is included in the latest Knorr-Bremse service manual.

Refer to ***Knorr-Bremse Pneumatic Disc Brake Y006471 Service Manual****.*

27.3 CHECKING DISC BRAKE PADS

Brake pads have to be checked on a regular basis depending on the vehicle operation. The remaining thickness of the pads should never be less than 0.079 in (2 mm). When replacing brake pads, all four pads on an axle have to be changed at the same time. There is no inner or outer pad, since all pads are the same. Once removed, worn pads should be replaced in their original position.

27.3.1 Drive Axle – Equipped With a Solid Rubber Bushing and Exposed Guide Pin

The condition of the pads can be visually determined without removing the wheel by checking the position of the caliper (1) compared to the fixed guide pin (4).

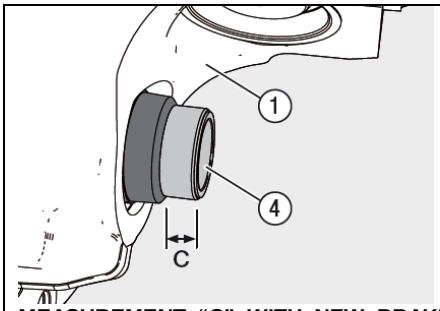

MEASUREMENT "C" WITH NEW BRAKE PADS AND DISC

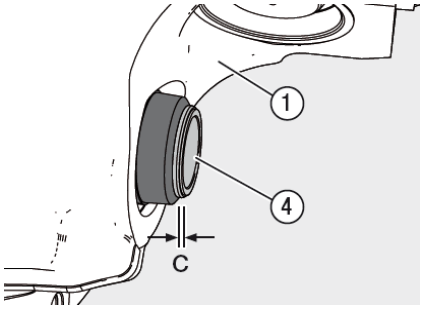

MEASUREMENT "C" WITH WORN DISC/BRAKE PADS

FIGURE 23: BRAKE PAD WEAR CHECK ON DRIVE AXLE

If measurement "C" is less than 0.039" (1 mm), this condition requires a check of the brake pad thickness and the brake disc with the wheel removed. If any minimal tolerance limits have been reached, the pads and/or disc must be changed.

27.3.2 Front and Tag Axle – Equipped With Visual Wear Indicator

The condition of the pads can be checked without removing the wheel by checking the position of the caliper compared to the tip of the wear indicator or carrier depending on vehicles.

In one variant of the visual wear indicator (Figure 24), if the side of the caliper (flat surface around guide pin cap) lines up with the tip of the wear indicator (i.e. measurement A would be 0.0 in), the brake pad thickness and the brake disc must be checked with the wheel removed. If any minimal tolerance limits have been reached, the pads and/or disc must be changed.

Alternately, brake pad wear can be checked using carrier to caliper position. When points "P" and "R" align the brake pad thickness and brake disc must be checked with the wheels removed (Figure 23). If any minimal tolerance limits have been reached, the pads and/or disc must be changed.

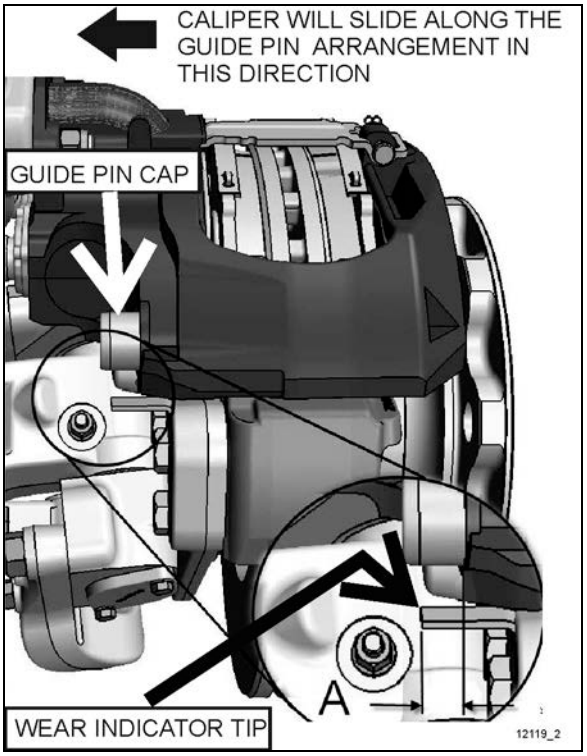

FIGURE 24: BRAKE PAD WEAR CHECK ON FRONT AND TAG AXLE 12119

Refer to ***Knorr-Bremse Pneumatic Disc Brake Y006471 Service***.

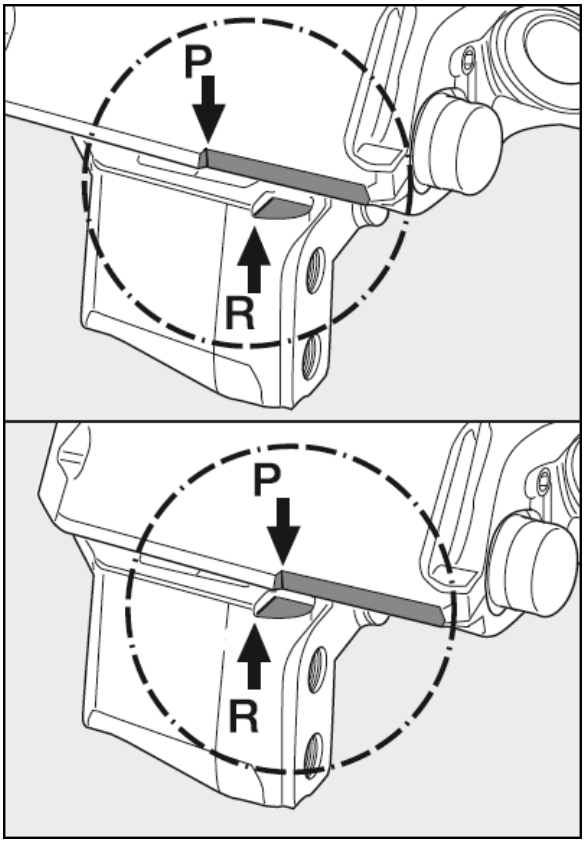

FIGURE 25: PAD WEAR CHECK FRONT AND TAG AXLE

27.4 BRAKE PADS AND DISCS MINIMAL TOLERANCE LIMITS

27.4.1 Brake Pads

The thickness of the pads must be checked regularly dependent on the usage of the vehicle. The pads should be checked corresponding to any legal requirements that may apply. Even if a wear indicator is fitted and connected, this must be at least every 12 months.

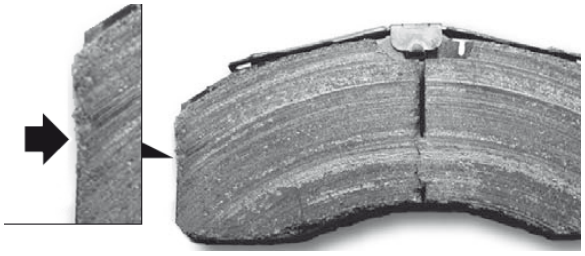

FIGURE 26:MINOR BREAKOUTS AT THE EDGES ARE PERMITTED (SEE ARROW)

FIGURE 27:MAJOR BREAKOUTS ON THE SURFACE OF THE BRAKE PAD ARE NOT PERMITTED

If the thickness of the friction material at its thinnest point is less than 0.079 inch or 2 mm (measurement C), the pads must be replaced.

A= Overall thickness of new brake pad: 1.18 in (30 mm)
B= Back plate SN7 type: 0.354 in (9 mm)
C= Minimal thickness of friction material: 0.079 in (2 mm)
D= Minimum allowed thickness in worn condition for back plate and friction material: 0.433 in (11 mm)

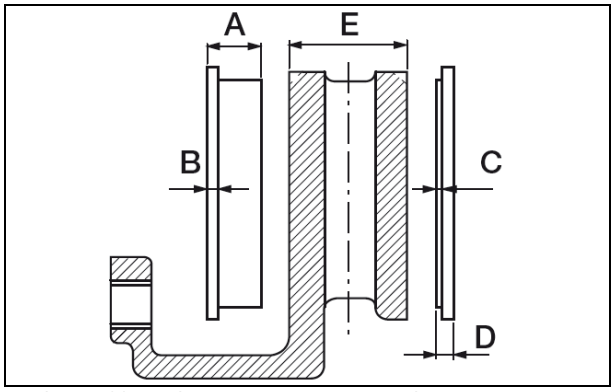

FIGURE 28: FRONT AXLE BRAKE AIR CHAMBER 12158

27.4.2 Brake Disc

Measure the thickness of the brake disc at the thinnest point. Be aware of possible burring at the edge of the disc.

E= Total thickness of the brake disc
New condition = 1.77 in (45mm)

Worn condition = 1.457 in (37mm) (the disc must be replaced)
If the disc dimension E ≤ 1.535 in (39mm), it is recommended that the disc should be renewed when the brake pads are changed.

Refer to ***Knorr-Bremse Pneumatic Disc Brake Y006471 Service***.

27.5 CALIPER RUNNING CLEARANCE

The Knorr/Bendix air disc brake is designed to move freely, with minimal force. By pushing and pulling the caliper in an axial direction by hand (see arrows in Figure 24), a movement of 0.6 - 1.1 mm must be possible.

If, even using a high level of hand pressure (no tools), the caliper is not moveable, the caliper guidance must be further examined.

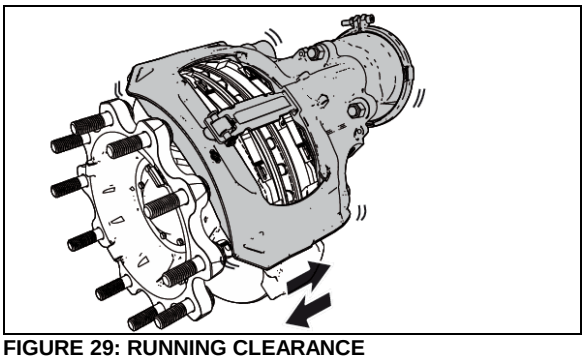

FIGURE 29: RUNNING CLEARANCE

28. SAFE SERVICE PROCEDURES

Most recently manufactured brake linings no longer contain asbestos fibers. Instead of asbestos, these linings contain a variety of ingredients, including glass fibers, mineral wool, aramid fibers, ceramic fibers, and carbon fibers. At present, OSHA (Occupational Safety and Health Administration) does not specifically regulate these non-asbestos fibers, except as nuisance dust. Medical experts do not agree about the potential long-term risks from working with and inhaling non-asbestos fibers. Nonetheless some experts think that long-term exposure to some non-asbestos fibers could cause diseases of the lung, including pneumo-coniosis, fibrosis, and cancer. Therefore, lining suppliers recommend that workers use caution to avoid creating and breathing dust when working on brakes that contain non-asbestos fibers.

WARNING

Whenever possible, work on brakes in a separate area away from other operations.

Always wear a respirator approved by NIOSH (National Institute of Occupational Safety and Health) or MSHA (Mine Safety and Health Administration) during all brake service procedures. Wear the respirator from removal of the wheels through assembly.

WARNING

NEVER use compressed air or dry brushing to clean brake parts or assemblies. OSHA recommends that you use cylinders that enclose the brake. These cylinders have vacuums with high efficiency (HEPA (Health and Environment Protection Agency)) filters and workman's' arm sleeves. If such equipment is not available, carefully clean parts and assemblies in open air.

During disassembly, carefully place all parts on the floor to avoid getting dust into the air. Use an industrial vacuum cleaner with a HEPA filter system to clean dust from the brake drums, backing plates and other brake parts. After using vacuum, remove any remaining dust with a rag soaked in water and wrung until nearly dry.

If you must grind or machine brake linings, take additional precautions, contact with fiber dust is higher during these operations. In addition to wearing an approved respirator, do such work in an area with exhaust ventilation.

When cleaning the work area, NEVER use compressed air or dry sweeping to clean the work area. Use an industrial vacuum with a HEPA filter and rags soaked in water and wrung until nearly dry. Dispose of used rags with care to avoid getting dust into the air. Use an approved respirator when emptying vacuum cleaners and handling used rags.

Wash your hands before eating, drinking or smoking. Do not wear your work clothes at home. Vacuum your work clothes after use and then launder them separately, without shaking, to prevent fiber dust from getting into the air.

Material safety data sheets on this product, as required by OSHA, are available from Rockwell and Knorr-Bremse.

29. AIR BRAKE TROUBLESHOOTING

The following tests and check lists have been designed to identify the cause(s) of a sluggish performance and/or leaks in the system. These tests require very little time to perform, and give you a general idea of the system condition. Each test is provided with a corresponding check list which will guide you to the most common causes of problems.

Before performing any test, check all air lines for kinks or dents, and hoses for signs of wear, drying out or overheating.

WARNING

When working on or around brake system and its related components, the following precautions should be observed:

Always block vehicle wheels. Stop engine when working under a vehicle. Keep hands away from chamber push rods and slack adjusters as they may apply when system pressure drops.

Never connect or disconnect a hose or line containing air pressure. It may whip as air escapes. Never remove a component or pipe plug unless you are sure all system pressure has been depleted.

Never exceed recommended air pressure and always wear safety glasses when working with air pressure. Never look into air jets or direct them at anyone.

Never attempt to disassemble a component until you have read and understood the recommended procedures. Some components contain powerful springs and injury can result if not properly disassembled. Use only proper tools and observe all precautions pertaining to the use of those tools.

Always clean connecting piping and/or fittings, and coat pipe threads with Teflon pipe sealant before installing any air brake system component.

Pressure Build-Up / Low Pressure Warning / Cutoff Point / Air Filter/Dryer Built-in Governor Cutout

CONDITION: Vehicle leveled, parking brake applied.

1. Completely drain wet, primary and secondary air reservoirs only.
2. Start engine and run at fast idle. Low pressure warning lights should be *"On"*.
3. Start checking pressure at 50 psi (344 kPa).
4. Low pressure warning lights and buzzer should go off at or above 60 psi (415 kPa).
5. At 85 psi (586 kPa), run engine at full rpm, then check that build up time to 100 psi (690 kPa) is 13 seconds or less.
6. Air filter/dryer built-in governor cut-out. Cuts out at the correct pressure of 140 psi (965 kPa).
7. Air filter/dryer built-in governor cut-in. Cuts in around 122 psi (841 kPa).

For common corrections, refer to the following check list:

High or Low Warning Cutoff Point

- Perform a telltale light and gauge test. Replace entire cluster if found defective.

High or Low Air Filter/Dryer Built-in Governor Cutout Point

- Perform a telltale light and gauge test. Replace entire cluster if found defective.

OR

- Repair or replace air filter/dryer as necessary after checking that compressor unloader mechanism operates correctly.

More than 13 seconds to build-up pressure from 85 to 100 psi (585 - 690 kPa) at full engine RPM

- Perform a telltale light and gauge test. Replace entire cluster if found defective.
- Check compressor strainer or inlet line. If restricted, clean or replace element or faulty line.
- Check compressor head or discharge line for carbonization or restriction. Clean or replace as necessary.
- If discharge valves leak, pull head and correct or replace cylinder head.
- If drive is slipping, replace gear.

- If inlet valves are stuck, open or leaking severely, replace unloader kit, inlet valves and/or seats as necessary.
- If drain cock is found open, close it.
- Listen for air leaks and repair.
- Redo list to check all items repaired or replaced.

Air Supply Reservoir Leakage

CONDITION**:** Full pressure, engine stopped, parking brake applied

1. Allow at least 1 minute for pressure to stabilize.
2. Stop engine, then check air pressure gauge for 2 minutes. Note any pressure drop.
3. Pressure should not drop by more than 3 psi (20 kPa) per minute.

For common corrections, refer to the following check list:

Excessive air loss:

- With the primary air system at normal operating pressure 122-140 psi (841- 965 kPa), coat all air line connections and pneumatic components with a water and soap solution. Bubbles will indicate an air leak, and none should be permissible. Repair or replace defective parts.
- Listen for leaks and correct as required.
- Redo test to check all items repaired or replaced.

Brake System Air Leakage

CONDITION**:** Full pressure, engine stopped, parking brake released.

1. Apply service (foot) brakes, allow at least 1 minute for pressure to stabilize.
2. Hold down foot valve for 1 minute while observing air pressure gauge on the dashboard.
3. Pressure drop should not be more than 3 psi (20 kPa) per minute.

For common corrections, refer to the following check list.

Excessive leakage on brake service side:

- With the primary air system at normal operating pressure 122-140 psi (841- 965 kPa) and foot brake applied, coat all air line connections and brake pneumatic components with a water and soap solution. Bubbles will indicate an air leak, and none should be permissible. Repair or replace defective parts.
- Listen for leaks and correct as required.
- Redo test to check all items repaired or replaced.

30. BRAKE AIR CHAMBER

This vehicle uses “Knorr-Bremse” brake chambers on all axles. The drive axle chambers consist of two separate air chambers, each having its own diaphragm and push rod. They are used as a service brake chamber, an emergency brake in case of air pressure loss and a spring-applied parking brake. Refer to **FIGURE 30**.

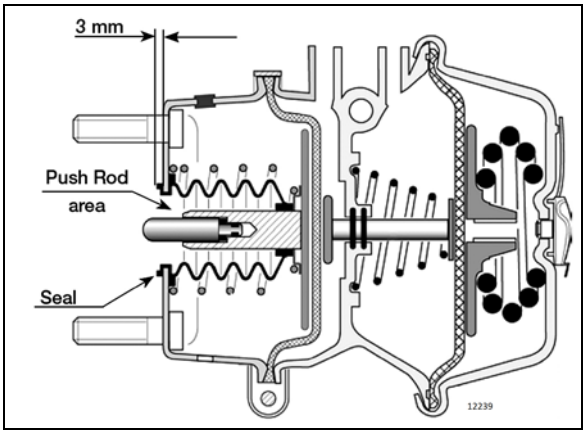

FIGURE 30: DRIVE AXLE BRAKE AIR CHAMBER

The front and tag axle brake air chambers are used only for service brake duty (FIGURE 31).

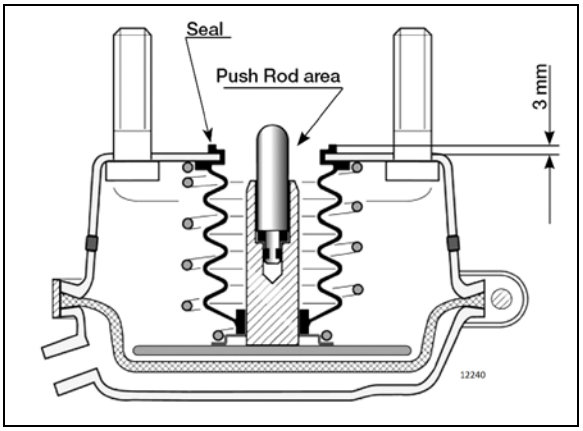

FIGURE 31: DRIVE AXLE BRAKE AIR CHAMBER

30.1 MAINTENANCE

Every 6,250 Miles (10 000 km) or twice a year, whichever comes first depending on type of operation:

Check all hoses and lines. They should be secure and in good condition.

Every 100,000 Miles (160 000 km) or once a year, whichever comes first depending on type of operation

1. Disassemble and clean all parts.
2. Install new diaphragm or any other part if worn or deteriorated.

> *NOTE*
>
> *When the diaphragm, spring, or both are replaced, they should be replaced in the corresponding chamber on the same axle.*

3. Perform an airtightness test:

a) Make and hold a full brake application.

b) Coat clamping ring(s) with a soapy solution. If leakage is detected, tighten clamping ring only enough to stop leakage. ***Do not over-tighten*** as this can distort sealing surface or clamping ring. Coat area around push rod hole (loosen boot if necessary). No leakage is permitted. If leakage is detected, the diaphragm must be replaced.

30.2 EMERGENCY/PARKING BRAKE MANUAL RELEASE

> **DANGER**
>
> Never stand in the axis line of the spring brake chambers, especially when caging the spring.

Drive Axle

1. Block the wheels to prevent the vehicle from moving.
2. Remove the release stud tool from its storage place on drive axle brake air chamber.
3. Remove the access plug from the end of the spring chamber, and then insert the release stud through the opening. Turn the release stud 1/4 turn (clockwise) to anchor it into the spring plate. Install the flat washer and nut, and then turn the nut clockwise to cage the spring. Repeat on the opposite side.

> **DANGER**
>
> Make sure the release stud is properly anchored in spring plate receptacle prior to caging the spring.

4. To manually reset the emergency/parking brake, turn the nut counterclockwise. Reinstall access plugs on the spring chambers, and release stud tools in their storage places.

Tag Axle

1. Block the wheels to prevent the vehicle from moving.
2. Turn the release bolt counterclockwise to cage the power spring (approx. 2.5 inches (6 cm)). Repeat on the opposite side.
3. To manually reset the emergency/parking brake, turn the bolt clockwise.

30.3 BRAKE CHAMBER REMOVAL

> **WARNING**
>
> To prevent personal injuries, brakes should be inoperative prior to working on any of their components.
>
> To prevent personal injuries, brake chambers should be made inoperative by releasing spring tension prior to disposal.

1. Block the wheels to prevent the vehicle from moving.
2. Safely support vehicle at the recommended body jacking points.
3. To gain access to a given brake air chamber, the corresponding wheel can be removed (refer to Section 13: *"Wheels, Hubs and Tires"*).
4. Exhaust compressed air from system by opening the drain valve of each reservoir.
5. For the drive and tag axles brake chambers, manually release spring brakes (refer to "*Emergency/Parking Brake, Manual Release"* procedure in this section).
6. Disconnect air line(s) from brake chamber.
7. Remove the cotter pin connecting brake chamber and slack adjuster (drive axle).
8. Unbolt and remove the brake chamber from vehicle.

30.4 BRAKE CHAMBER INSTALLATION

Reverse removal procedure, and then check brake adjustment.

CAUTION

Always clean air lines and fittings, and coat pipe threads with Teflon pipe sealant before reconnecting air lines. Make sure the drain hole of the brake chamber is in the lower position for proper moisture evacuation.

30.5 BRAKE CHAMBER DISASSEMBLY

DANGER

Spring brake chambers, on drive and tag axles contain an extremely high compressive force spring, which can possibly cause serious injury if special precautions are not taken when working around this area.

To avoid such injury, the following recommendations must be applied:

- Prevost recommends the installation of a new spring brake chamber if it is found to be defective.
- Spring brake chamber maintenance and/or repair must be performed by trained and qualified personnel only.
- Before manually releasing spring brakes, visually check spring brake for cracks and/or corrosion.
- On “MGM” brake chambers (drive axle), make sure the release stud is properly anchored in spring plate receptacle prior to caging the spring.
- Never stand in the axis line of the spring brake chambers, especially when caging the spring.

WARNING

To prevent personal injuries, brakes should be inoperative prior to working on any of their components.

1. Block the wheels to prevent the vehicle from moving.
2. Safely support vehicle at the recommended body jacking points.

NOTE

To gain access to a given brake air chamber, the corresponding wheel can be removed (refer to Section 13: "Wheels, Hubs and Tires").

3. Exhaust compressed air from air system by opening the drain valve of each reservoir.
4. For the drive and tag axles brake chambers, manually release spring brakes (refer to “*Emergency/Parking Brake Manual Release"* procedure in this section).
5. Remove clamp ring, remove and discard the existing diaphragm. Install the new diaphragm squarely on body.
6. Reverse the procedure for assembly. Tap clamp ring to ensure proper seating. Check for proper operation before placing vehicle in service.

31. ANTI-LOCK BRAKING SYSTEM (ABS)

This device has been designed to ensure stability and permit steering control of vehicle during hard braking, and to minimize its stopping distance whatever the road conditions are. On slippery roads and generally in emergency situations, over-braking frequently induces wheel lock. The anti-lock braking system provides maximum braking performance while maintaining adequate steering control on slippery roads.

The ABS continuously monitors wheel behavior during braking. Sensors on each wheel of front and drive axles (tag axle is slave to drive axle) transmit data to a four channel electronic processor which senses when any wheel is about to lock. Modulator valves quickly adjust the brake pressure (up to 5 times per second) to prevent wheel locking. Each wheel is therefore controlled according to the grip available between its tire and the road.

With this device, the vehicle is brought to a halt in the shortest possible time, while remaining stable and under the driver's control.

Since the braking system has dual circuits, the ABS is also provided with a secondary system should a fault develop in the ABS. Anti-lock systems are a parallel system which does not hinder brake functioning in case of failure. Braking system functions in normal, non-anti-lock controlled operation during ABS system failure.

The ABS system consists of two diagonally related circuits, only the half of the system which has sustained damage or other fault is switched off (i.e. wheels return to normal non-ABS braking). The other diagonal half remains under full ABS control.

NOTE
ABS is active on service brake, transmission retarder, engine brake, but is inactive on emergency/parking brake.

NOTE
The ABS system is inoperative at speeds under 4 mph (6 km/h). Illumination of ABS telltale indicator at these speeds is normal.

CAUTION
Disconnect the ECU or pull the ABS fuse before towing vehicle.

31.1 TROUBLESHOOTING AND TESTING

For troubleshooting and testing of the vehicle's anti-lock braking system, refer to Bendix applicable booklet annexed to this section under reference number SD-13-4869.

31.2 ABS COMPONENTS

The main components of the ABS system are listed hereafter. Refer to each component for its specific function in the system and for proper maintenance.

31.3 BENDIX EC-60 ADVANCED CONTROLLER

This control unit, also known as ABS module, is located in the front electrical and service compartment. According to the data transmitted by the sensors (number of pulses/sec is proportional to the speed of each wheel), the electronic control unit determines which wheel is accelerating or decelerating. It then establishes a reference speed (average speed) from each wheel data, and compares the speed of each wheel with this reference speed to determine which wheel is accelerating or decelerating.

As soon as wheel deceleration or wheel slip threshold values are exceeded, the electronic control unit signals a solenoid control valve to limit the excessive brake pressure produced by the driver in the appropriate brake chamber.

Maintenance

No specific maintenance is required. The ECU is not serviceable. When found to be defective, replace.

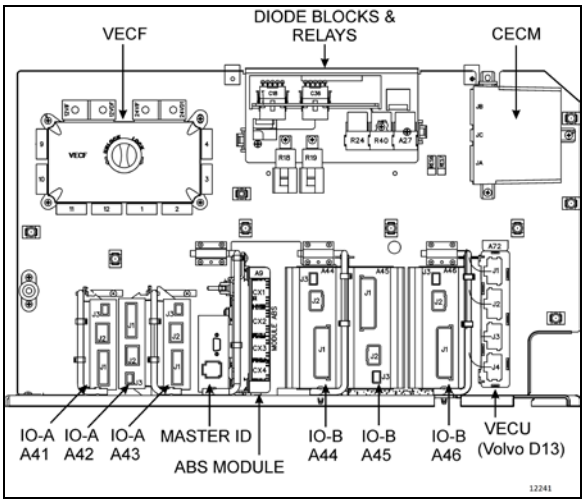

FIGURE 32: ABS ECU LOCATION

CAUTION
In order to protect the ABS electronic control unit from voltage surges, always disconnect before performing any welding procedure on vehicle.

31.4 SENSORS

The sensors are mounted on the front and drive axle wheel hubs (Figure 33). The inductive sensors consist essentially of a permanent magnet with a round pole pin and a coil. The rotation of the toothed wheel alters the magnetic flux picked up by the coil, producing an alternating voltage, the frequency of which is proportional to wheel speed. When wheel speed decreases, magnetic flux decreases proportionately. Consequently, the electronic control unit will command the solenoid control valve to decrease the pressure at the corresponding brake chamber.

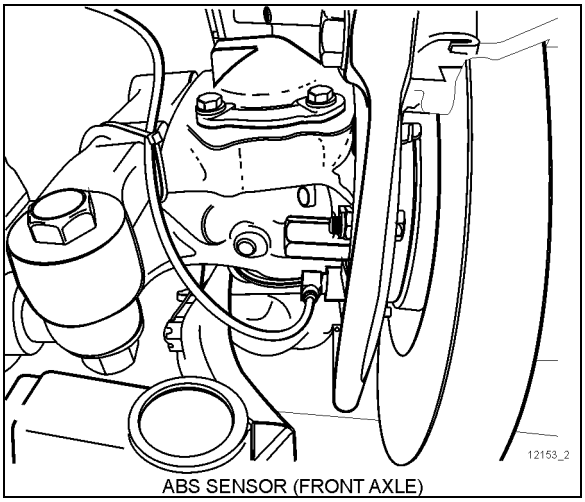

FIGURE 33: ABS SENSOR LOCATION

Maintenance

No specific maintenance is required for sensors, except if the sensors have to be removed for axle servicing. In such a case, sensors should be lubricated with special grease (Prevost #680460) before reinstallation. Refer to paragraph *"Sensor Installation"* for details.

> ***NOTE***
>
> *The resistance value, when sensors are checked as a unit, must be equal to 1,75 kohms. To check the sensors for proper output voltage after the sensors and toothed wheels have been assembled to the axle, connect a suitable AC voltmeter across the output terminals. With the hubs rotating at 30 rpm, the output voltages should read from 50 to 1999 mV to be acceptable.*

Sensor Installation

The following procedure deals with sensor installation on the axle wheel hubs. Read procedure carefully before reinstalling a sensor, as its installation must comply with operational tolerances and specifications.

1. Apply recommended lubricant (Prevost #680460) to spring clip and sensor.

> **CAUTION**
>
> Use only this type of grease on the sensors.

2. Insert spring clip in the holder on hub. Make sure the spring clip tabs are on the inboard side of the vehicle. Push in until the clip stops.
3. Push the sensor completely inside the spring clip until it is in contact with the tooth wheel. Ensure mounting is rigid, as it is an important criterion for adequate sensor operation.

> ***NOTE***
>
> *This installation should be of the "press fit" type.*

31.4.1 Spring clip

The spring clip retains the sensor in its mounting bracket close to the toothed pulse wheel. The gap between the sensor end and teeth is set automatically by pushing the sensor in the clip hard up against the tooth wheel, and the latter knocks back the sensor to its adjusted position (Figure 34).

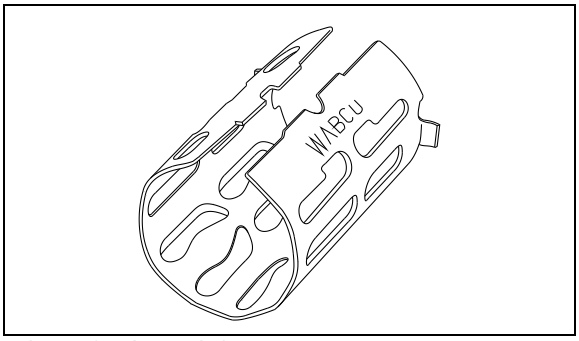

FIGURE 34: SPRING CLIP 12161

Maintenance

The spring clip requires no specific maintenance.

> **MAINTENANCE**
>
> **ABS & ELECTRONIC STABILITY CONTROL SYSTEMS**
>
> Check the proper functioning of ABS and ESC systems at the intervals specified by the Lubrication And Servicing Schedule in Section 24: LUBRICATION & SERVICING. To do so, perform the "Component Test" using Bendix ACom Diagnostics software.
>
> Bendix ACom Diagnostics software is available for download at www.bendix.com.

32. BENDIX AUTOMATIC TRACTION CONTROL (ATC) – ELECTRONIC STABILITY CONTROL (ESC)

In addition to the ABS function, vehicle is equipped with a Traction Control System (TCS) feature. This feature is provided by the Bendix EC-60 advanced controller. Bendix refers to this feature as **Automatic Traction Control (ATC)**. Bendix ATC can improve vehicle traction during acceleration, and lateral stability while accelerating through curves. ATC utilizes **Engine Torque Limiting (ETL)** where the ECU communicates with the engine's controller and/or **Differential Braking (DB)** where individual wheel brake applications are used to improve vehicle traction.

The EC-60 advanced model controller also provides an ABS-based Electronic Stability Control (ESC) feature. Bendix refers to it as **ESC Electronic Stability Control**.

The Bendix ESC system is an ABS-based stability system that enhances vehicle stability by both reducing engine throttle and by applying vehicle braking based on actual vehicle dynamics

ESC stability system consists of Yaw Control (YC) and Roll Stability Program (RSP) features.

CAUTION

Even with ESC-equipped vehicles, the driver remains responsible for ensuring vehicle stability during operation.

32.1 COMPONENTS

32.1.1 The EC-60™ controller's ABS function utilizes the following components:

- Six (6) Bendix® WS-24™ wheel speed sensors. Each sensor is installed with a Bendix Sensor Clamping Sleeve;
- Five (5) Bendix® Pressure Modulator Valves (M-40QR);
- Dash-mounted vehicle ABS Indicator Lamp;
- Service brake relay valve;
- Dash-mounted trailer ABS Indicator Lamp.

32.1.2 The EC-60™ controller's ATC function utilizes the following components:

- Drive axle traction control valve;
- Dash-mounted ESC/TCS status/indicator lamp (also serves as the ESC status/indicator lamp);
- Dash-mounted TCS Mud/Snow switch;
- J1939 serial communication to engine control module.

32.1.3 The EC-60™ controller's ESC/RSP function utilizes the following components:

- Front Axle Traction Control Valve integral to the service brake relay valve;
- Dash-mounted ESC/TCS status/indicator lamp (also serves as the ATC status/indicator lamp);
- Bendix SAS-70 Steering Angle Sensor (mounted to the steering column);
- Bendix YAS-70 Yaw Rate/Lateral Acceleration Sensor (mounted to a cross member forward of the drive axle);
- Brake Demand Sensors (installed in the primary and secondary delivery circuits);
- An additional Modulator Valve (Bendix® M-40QR™ Pressure Modulator Valve) that controls pressure applied to the trailer brakes during system intervention.

32.2 BENDIX M-40QR PRESSURE MODULATOR VALVE

This Bendix M-40QR (quick release) Pressure Modulator Valve (PMV) is operated by the EC-60 controller to modify driver applied air pressure to the service brakes during ABS, ATC, RSP or YC activation. The PMV is an electro pneumatic control valve and is the last valve that air passes through on its way to the brake chamber. The modulator hold and release solenoids are activated to "modulate" or "control" the brake pressure during an antilock braking event. The hold solenoid is normally open and the release solenoid is normally closed, such that the PMV nominally allows air to flow through. This design allows for air delivery to brake chambers in the event of electrical trouble. This is an *"On/Off"* type valve, i.e., during an antilock activity, the valve exhausts air from the brake chamber when in a ABS event, the electronic unit senses that

the corresponding wheel speed is decreasing in relation to the other wheels.

The Advanced EC-60 controller also utilizes an additional PMV for control of the trailer service brakes during stability interventions.

6s/5m Configuration

Prevost vehicles utilize a 6 sensors/5 pressure modulator valves configuration, with the tag axle having two sensors, but only one Pressure Modulator Valve. In this case, the PMV controls both wheels on the tag axle. The tag axle wheels would receive equal brake pressure, based on the wheel that is currently experiencing the most wheel slip.

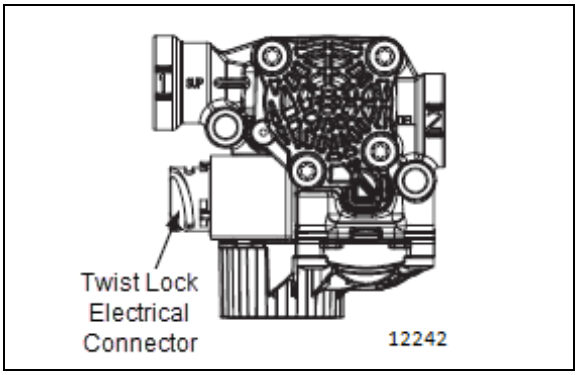

FIGURE 35: M-40QR PRESSURE MODULATOR VALVE

Maintenance

NOTE

On older vehicles, when replacing for the first time the older modulator valve M-32QR by the newer M-40QR modulator valve, it is important to replace both left and right valves on the vehicles drive axle or front suspension.

Modulator valve model can be easily identified by their different side cover and exhaust section.

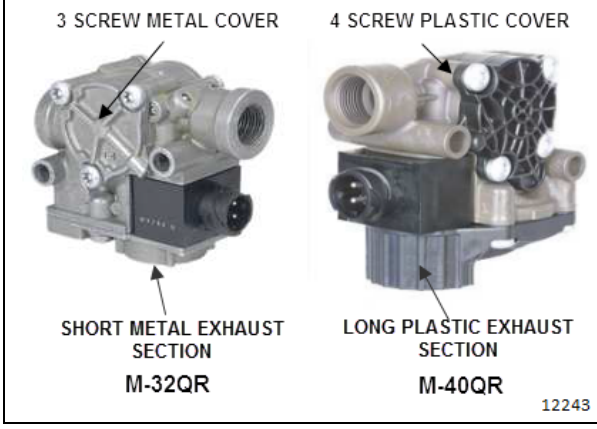

Mixing valve type on the left and right sides of the vehicle may result in slight pull to one side when braking.

Maintenance, removal and installation information of this valve is supplied in Bendix booklet annexed at the end of this section under reference number SD-13-4958.

32.3 ADVANCED ABS WITH ELECTRONIC STABILITY CONTROL (ESC)

Overview

Bendix ESC stability system reduces the risk of rollovers, jackknifing and other loss of control. ESC features include Roll Stability Program (RSP) and Yaw Control. During operation, the ECU of the Bendix Advanced ABS system constantly compares performance models to the vehicle's actual movement, using the wheel speed sensors of the ABS system, as well as lateral, yaw, and steering angle sensors. If the vehicle shows a tendency to leave an appropriate travel path, or if critical threshold values are approached, the system will intervene to assist the driver.

Roll Stability Program

Bendix RSP, an element of the overall ESC system, addresses rollover conditions. In the case of a potential roll event, the ECU will override the throttle and quickly apply pressure at all wheel ends to slow the vehicle. The level of braking application during an RSP event will be proportional to roll risk.

Yaw Stability

Yaw stability counteracts the tendency of a vehicle to spin about its vertical axis. During operation, if the friction between the road surface and the tires is not sufficient to oppose lateral (side) forces, one or more of the tires can slide, causing the vehicle to spin. These events are referred to as either an "under-steer" situation (where there is a lack of vehicle response to steering input due to the slide on the front axle) or an "over-steer" (where the vehicle's rear end slides out due to tire slide on the rear axle) situation. Factors that influence yaw stability are: wheelbase, suspension, steering geometry, weight distribution front to rear, and vehicle track width.

Yaw Control

Yaw Control corresponds to a wide range of low to high friction surface scenarios including rollover, jackknife and loss of control. It is the recommended system for all power vehicles and especially critical for vehicles pulling trailers. In the case of vehicle slide (over-steer or under-steer situations), the system will reduce the throttle and then brake one or more of the “four corners” of the vehicle (in addition to potentially applying the trailer brakes), thus applying a counter-force to better align the vehicle with an appropriate path of travel.

For example, in an over-steer situation, the system applies the “outside” front brake; while in an under-steer condition, the “inside” rear brake is applied.

DANGER

Bendix ESC system may reduce the vehicle speed automatically.

ESC can make the vehicle **decelerate automatically.** ESC can slow the vehicle with or **without the operator applying the brake,** and **even when the throttle is being applied.**

32.4 BENDIX® SAS-70 STEERING ANGLE SENSOR

The Steering Angle Sensor (SAS) is used to provide driver steering input to the controller. It reports the steering wheel position to the controller utilizing a dedicated serial communications link that is shared with the YAS-70 sensor. The controller supplies the power and ground inputs to the SAS-70 sensor.

The SAS-70 sensor installed on Prevost vehicles is the 90° connector.

32.4.1 Removal of the steering angle sensor

Service Checks:

1. Check all wiring and connectors. Some installations also include an intermediate connector from the steering angle sensor to the main vehicle wire harness. Make sure all connections are free from visible damage.
2. Examine the sensor. Make sure the sensor, its mounting screws, and the interface between the hub and the steering column are not damaged.

Diagnostics:

The steering angle sensor is only operational in conjunction with an Advanced ECU. No independent diagnostics can be performed on the sensor.

Removal:

1. Remove steering column upper, middle and lower covers.
2. The steering angle sensor is located near the universal joint.
3. Unplug sensor cable assembly from body of sensor. Squeeze the mounting tabs and pull gently on connector until it disengages.
4. Disconnect steering column upper U-joint.
5. Unscrew all three of the mounting screws that hold the body of the sensor to the steering column body.
6. Slide the sensor over the column to remove. Take note if the sensor label is facing upward or downward.

Installation:

1. Obtain a new sensor. The sensor is not repairable in the field.
2. Slide the sensor over the column. The center hub of the sensor must be aligned with the corresponding notch in the column. The sensor label should be facing in the same direction as the removed sensor.

   TORQUE: 9-12 lb-in (1-1 Nm)

3. Reconnect the steering column U-joint.

   TORQUE: 35-39 lb-ft (47-53 Nm)

4. Reconnect the connector. Ensure that there will be no force applied to the sensor because the connector is pulling on the sensor body.
5. If the wire harness leading to the sensor is being replaced, ensure that it is adequately tie wrapped so that the full motion of the steering column can be achieved without pulling apart the connectors.
6. Reinstall the steering column covers. The sensor is not protected against dirt or water intrusion, so care must be taken not to introduce these elements during installation.

Steering Angle Sensor Calibration

The steering angle sensor calibration can only be achieved when the sensor is powered by the Advanced ABS ECU. No stand-alone sensor calibration can be carried out. The calibration procedure is performed using Bendix® ACom™ Diagnostic V4.0 or higher. See “Troubleshooting Diagnostic Trouble Codes: Steering Angle Sensor (SAS-60)” for the calibration procedure using this tool.

The sensor **must** be recalibrated after any of these situations:

- Replacement of the steering angle sensor;
- Any opening of the connector hub from the steering angle sensor to the column;
- Any maintenance or repair work on the steering linkage, steering gear or other related mechanism;
- Adjustment of the wheel alignment or wheel track;
- After an accident that may have led to damage of the steering angle sensor or assembly.

WARNING

If the steering angle sensor is not properly recalibrated as needed, the yaw control system may not function properly, which can result in incidents leading to loss of vehicle control.

33. FITTING TIGHTENING TORQUES

NTA-Type Plastic Tubing: Hand tighten nut. From that point, tighten using a wrench the number of turns indicated in the following chart.

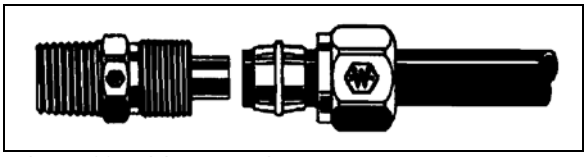

FIGURE 36: HOSE FITTING 12055

Tubing diameter (inch)	Number of additional turns required following manual tightening
1/4	3
3/8 to 1/2	4
5/8 to 3/4	3 ½

NOTE

Use Loctite pipe sealant to seal pipe thread (Prevost number 680098).

34. SPECIFICATIONS

Air Compressor
Make.....Meritor Wabco
Model..... SS636
Capacity (at 1250 rpm).....37.4 cfm (1,059 m^3/min.)

Air Dryer
Make.....Meritor Wabco
Model.....System Saver
Cut in pressure.....122 psi
Cut-out pressure.....140 psi

Flip-Flop Control Valve
Make..... Bendix Westinghouse
Model..... TW-1
Type ..... On-Off

Emergency/Parking Brake Control Valve
Make..... Bendix Westinghouse
Model..... PP-1
Automatic release pressure ..... 60 psi (414 kPa) nominal

Dual Brake Application Valve
Make..... Bendix Westinghouse
Model..... E-10P

Spring Brake Valve
Make..... Bendix Westinghouse
Model.....SR-1

Pressure Protection Valve
Make..... Bendix Westinghouse
Model.....PR-4
Nominal closing pressure.....70 psi (482 kPa)
Prevost number 641137

Shuttle-Type Double Check Valve
Make..... Bendix Westinghouse
Model.....DC-4

Air Pressure Regulator
Make..... Norgren
Adjustable output range ..... 0-80/85 psi (0-552/586 kPa)

Air Filter Element
Make..... Norgren
Type .....With manual drain

Front Axle Brake Chambers
Make.....Knorr-Bremse
Type 24-inch

Drive Axle Brake Chambers
Make.....Knorr-Bremse
Type ..... 24-inch as service -24-inch as emergency

Tag Axle Brake Chambers
Make.....Knorr-Bremse
Type 16-inch

Brake Lining (All Axles)
Make.....Knorr-Bremse

CONTENTS

1. TORQUE TABLES 3

1.1 WHEEL NUTS 3
1.2 TAG AXLE 3
1.3 FRONT AXLE 4
1.4 MERITOR DRIVE AXLE 4
1.5 ZF A132 DRIVE AXLE 5

2. WHEELS 6

2.1 H345 & X3-45 COACHES 6
2.2 H345 VIP & X3-45 VIP MOTORHOMES 6

3. WHEEL MAINTENANCE 6

3.1 INSPECTION 7
3.2 SINGLE WHEEL REMOVAL 7
3.3 SINGLE WHEEL INSTALLATION 7

4. DUAL WHEELS 7

4.1 OUTER WHEEL REMOVAL 7
4.2 INNER WHEEL REMOVAL 7
4.3 INNER WHEEL INSTALLATION 7
4.4 OUTER WHEEL INSTALLATION 7
4.5 INSPECTION 8

5. ALUMINUM WHEEL ANTI-CORROSION PROTECTION (WITHOUT DURA-BRIGHT) 8

6. WHEEL STRAIGHTNESS TEST 9

7. WHEEL STUDS 9

7.1 DRIVE AXLES WHEEL STUDS 9
7.2 FRONT AND TAG AXLE WHEEL STUDS 10

8. HUB MOUNTED WHEELS 10

8.1 CARE OF WHEELS 10

9. TAG AXLE WHEEL HUBS 10

9.1 TAG AXLE HUB BEARING INSPECTION 12
9.2 TAG AXLE HUB BEARING REMOVAL 12
9.3 TAG AXLE HUB BEARING INSTALLATION 12

10. FRONT AXLE WHEEL HUBS 15

10.1 FRONT AXLE HUB BEARING INSPECTION 15
10.2 FRONT AXLE HUB BEARING REMOVAL 16
10.3 FRONT AXLE HUB BEARING INSTALLATION 16

11. MERITOR DRIVE AXLE WHEEL HUBS 18

11.1 BEARING CHECK/ADJUSTMENT 18
11.2 DISASSEMBLY AND REPAIR 18

12. ZF DRIVE AXLE WHEEL HUBS 19

12.1 COMPACT BEARING (HUB UNIT) AXIAL PLAY CHECK 19

12.2 COMPACT BEARING (HUB UNIT) GREASE CHANGE....20

13. SPARE WHEEL....20

13.1 SUPER SINGLE TIRE REPLACEMENT....21
13.2 PULLING OUT SPARE WHEEL....21
13.3 CHANGING A FLAT TIRE (COACHES ONLY)....22
13.4 CHANGING A FLAT TIRE (VIP & CONVERTED BUS SHELLS)....22
13.5 SPARE WHEEL MAINTENANCE....23

14. VALVE INSTALLATION....24

14.1 TPMS SENSORS INSTALLATION....25

15. TIRE MAINTENANCE....26

15.1 INFLATION PRESSURE....26
15.2 TIRE MATCHING....28
15.3 WHEEL BALANCING....28
15.4 TIRE ROTATION....28

16. SPECIFICATIONS....29

1. TORQUE TABLES

1.1 WHEEL NUTS

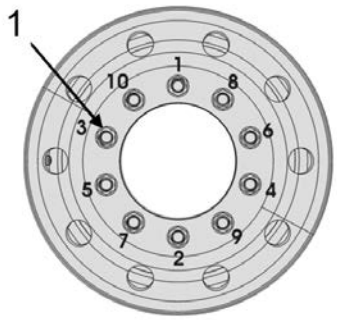

WHEEL NUTS (ALL TYPES) – STEEL/ALUMINUM WHEELS		
No	DESCRIPTION	TORQUE
1	Wheel nuts (M22x1.5 threads)*	450-500 lb-ft (610-678 Nm)

*Torque following sequence shown

1.2 TAG AXLE

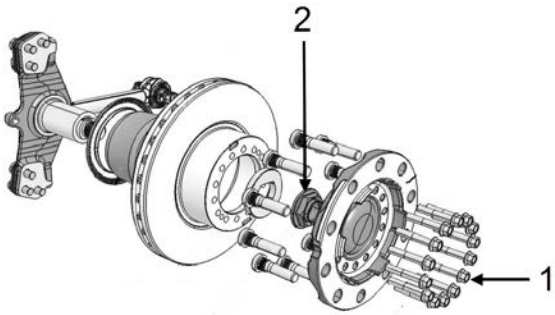

TAG AXLE		
No	DESCRIPTION	TORQUE
1	Tag axle hub flange cap screws	161-197 lb-ft (218-267 Nm)
2	Tag axle hub nut	563-687 lb-ft (763-931 Nm)

1.3 FRONT AXLE

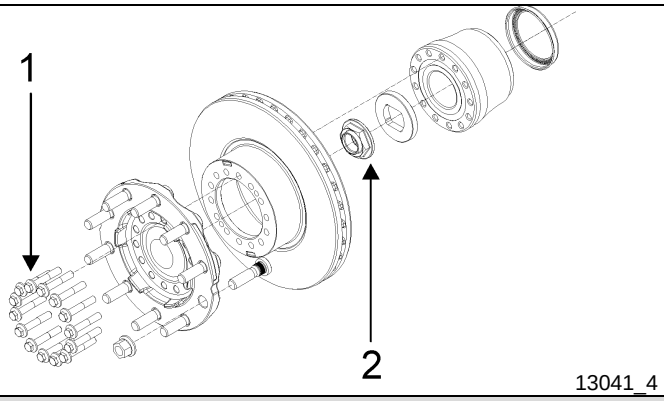

FRONT AXLE		
No	DESCRIPTION	TORQUE
1	Front axle hub flange cap screws	174-192 lb-ft (236-260 Nm)
2	Front axle hub nut	575-625 lb-ft (780-847 Nm)

1.4 MERITOR DRIVE AXLE

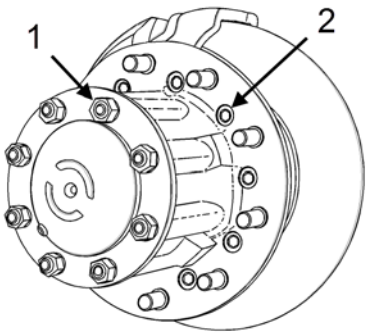

MERITOR DRIVE AXLE		
No	DESCRIPTION	TORQUE
1	Drive shaft flange nuts 5/8-18	150-230 lb-ft (203-312 Nm)
2	Hub to disc cap screws 9/16-18	110-165 lb-ft (149-224 Nm)

1.5 ZF A132 DRIVE AXLE

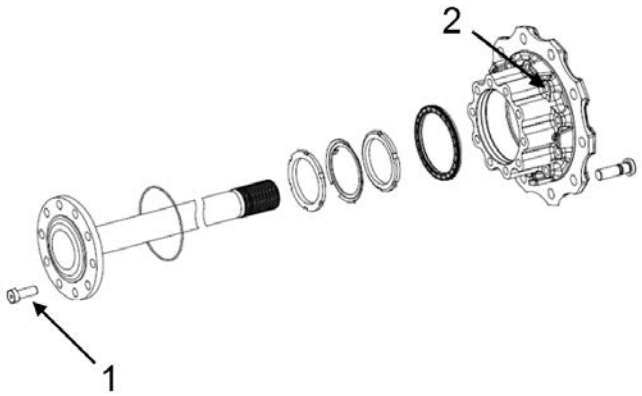

ZF DRIVE AXLE		
No	DESCRIPTION	TORQUE
1	Drive shaft flange bolts cap screw M18x1.5x50mm G10.9	325 lb-ft (441 Nm)
2	Hub cap screw Torx M16x1.5x60	221 lb-ft (300 Nm)

2. WHEELS

The vehicle is equipped with hub-mounted wheels as standard equipment, all studs and nuts have right-hand threads Either steel wheels or optional aluminum-polished wheels may be installed on the vehicle. Both are mounted with radial tubeless tires. Dura-Bright surface treatment on aluminum wheels is optional.

2.1 H345 & X3-45 COACHES

Except for customer special request, all wheel dimensions are 22.50 X 9.0 inches (571.5 X 228.6 mm) for 315/80 R 22.5 "L" tires.

All wheels can either be steel or aluminum.

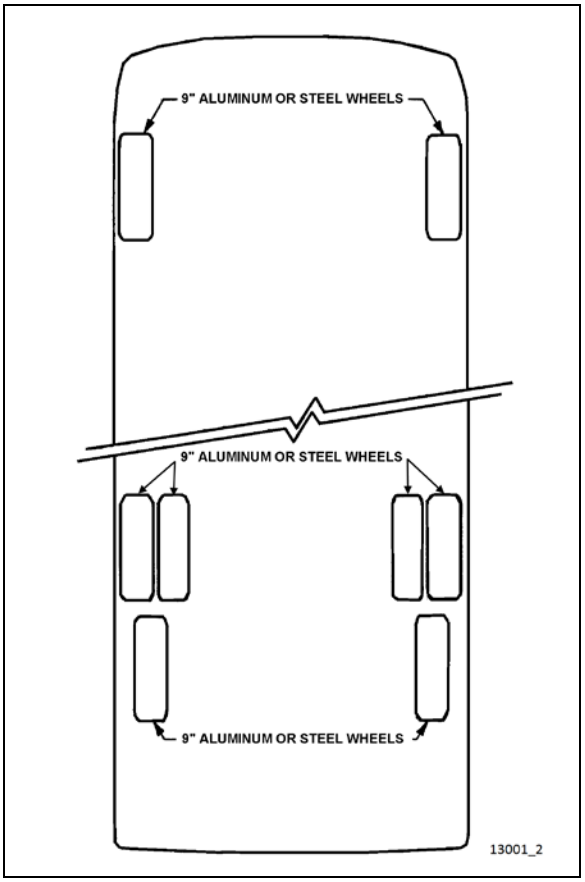

FIGURE 1: ALUM/STEEL WHEEL ARRANGEMENT

2.2 H345 VIP & X3-45 VIP MOTORHOMES

Drive axle wheel dimensions are 22.50 X 9.0 inches (571.5 X 228.6 mm) for 315/80 R 22.5 tires while front and tag axle wheels are 22.50 X 10.5 inches (571.5 X 266.7 mm) for 365/70 R 22.5 tires.

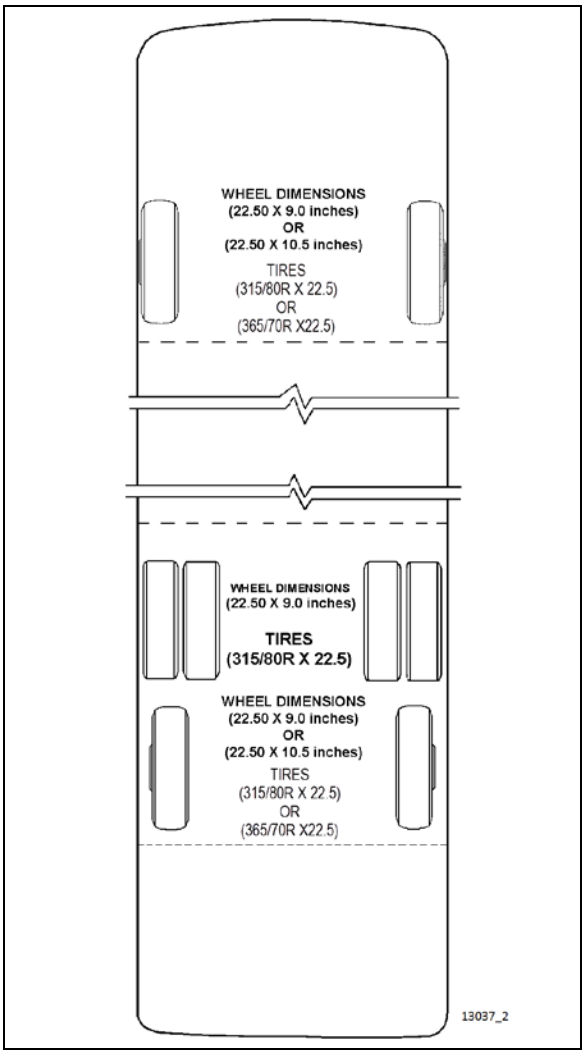

FIGURE 2: WHEEL ARRANGEMENT 13037

NOTE
Wide base “Super Single” tire are available as an option to replace both drive axle wheels and tires by a single 455/55 X 22.5 tire mounted on a 14 inches wheel.

3. WHEEL MAINTENANCE

Wheel maintenance consists of periodic inspections. Check all parts for damage and make sure that wheel nuts are tightened to the proper torque. In the case of a new vehicle, or after a wheel installation, stud nuts should be tightened every 100 miles (160-km) for the first 500 miles (800-km) to allow setting in of clamping surfaces.

CAUTION

Wheel studs and nuts must be kept free from grease and oil. No lubricant whatsoever should be used. Cleanliness of the wheel and its rotor mating surfaces is important for proper wheel mounting.

It is recommended to add some rust protection lubricant on the outside diameter of the hub (to facilitate future removal).

It is also important that wheel stud nuts be tightened alternately on opposite sides of the wheel. Refer to Figure 3 for the suggested tightening sequence.

3.1 INSPECTION

Tighten stud nuts progressively as shown in Figure 3. The final tightening should be done with a torque wrench.

TORQUE (aluminum & steel wheels):
450-500 lb-ft (610-678 Nm)

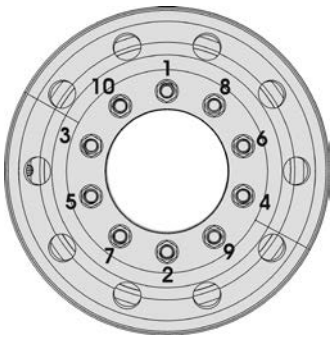

FIGURE 3: TIGHTENING SEQUENCE 13018

3.2 SINGLE WHEEL REMOVAL

1. Stop engine and apply parking brake.
2. Loosen wheel nuts about one turn (do not remove the nuts). This is not necessary if equipped with hydraulic powered gun.
3. Raise the vehicle by its jacking points on the body. See Section 18, *"Body",* under heading *"Vehicle Jacking Points";*
4. Unscrew wheel hex stud nuts and remove the wheel;

CAUTION

Always mark position of the wheel on the axle prior to removal in order to replace wheel at the same location, thus avoiding a new wheel balancing.

3.3 SINGLE WHEEL INSTALLATION

1. Mount the wheel over studs, being careful not to damage stud threads;
2. Screw in the hex stud nuts (refer to Figure 3 for sequence) so that wheel will position itself concentrically with hub. This is important, otherwise wheel may be eccentric with hub and will not run straight. In this initial step, slightly tighten the nuts to correctly position the wheel;
3. Tighten stud nuts progressively as shown in Figure 3. The final tightening should be done with a torque wrench.

TORQUE (aluminum & steel wheels):
450-500 lb-ft (610-678 Nm)

CAUTION

Insufficient mounting-torque can result in damage to parts. Excessive mounting torque can cause studs to break and the wheel to crack in stud hole area.

4. DUAL WHEELS

4.1 OUTER WHEEL REMOVAL

Same as described in *"Single Wheel Removal"* procedure described previously.

4.2 INNER WHEEL REMOVAL

1. Remove outer wheel;
2. Remove inner wheel.

4.3 INNER WHEEL INSTALLATION

Mount the wheel over studs, being careful not to damage stud threads;

4.4 OUTER WHEEL INSTALLATION

With inner and outer wheels installed, tighten the stud nuts progressively as shown in Figure 3. The final tightening should be done with a torque wrench.

TORQUE (aluminum & steel wheels):
450-500 lb-ft (610-678 Nm)

CAUTION

Insufficient mounting-torque can result in damage to parts. Excessive mounting torque can cause studs to break and the wheel to crack in stud hole area.

NOTE

On dual wheel assemblies, position the wheels with the tire valves 180º apart in order to have access to both the inner and outer valves.

4.5 INSPECTION

1. Loosen a hex stud nut three turns (Figure 5);
2. Retighten the hex stud nut.

TORQUE: 450-500 lb-ft (610-678 Nm)

Repeat for each of the 10 *"hex stud nuts"* according to the tightening sequence in figure 3.

CAUTION

The actual length of thread engagement present in an assembled wheel cannot always be determined by visual inspection of measurement of a tightened assembly. The relationship of the wheel cap nut seat to the end of the stud may vary. If there is any doubt that enough thread engagement is present, the number of engaged threads may be counted. Tighten all nuts in the regular manner, then loosen one to hand-tightness. The number of turns to disengage a 1-1/8-inch nut should be at least five full turns.

At least seven full turns should be required to disengage a ¾-inch nut or a M22 nut. Ideally, when torqued to the proper load, the stud should be flush with the face of the nut. The face of the nut may be recessed in nuts that are taller for improved wrenching. With most of the nuts in present use, a few unengaged threads at the outer end will cause no problem provided at least 5-7 full turns are required to disengage the nut depending on thread size.

5. ALUMINUM WHEEL ANTI-CORROSION PROTECTION (WITHOUT DURA-BRIGHT)

Clean wheels often by means of a high pressure water jet. Cleaning may be accelerated with mild soap. Do not use concentrated alkaline cleaning products.

When tire is removed, clean and inspect wheel thoroughly. Remove dirt and corrosion on rim by means of a wire brush. Do not use a wire brush on the outer surface of the wheel.

The following measures should be taken to maintain original appearance of the aluminum wheels:

1. Remove any tar from wheel surface with a good quality tar remover.
2. Spray Alcoa Cleaner (Prevost #683529) evenly on cool outer surface of wheel. Let work 15-20 minutes (keep wet by spraying more Cleaner if necessary).
3. Rinse thoroughly with clean water and let air dry. Heavy oxidation may require a repeat application of cleaner.
4. Apply Alcoa Polish (Prevost #683528) sparingly to a small area using a clean, soft cloth. Work polish into surface as you would a rubbing compound.
5. Buff, turning cloth frequently, until surface is clean and shiny. Let air dry. Use power buffer to improve ease of use and gloss uniformity.
6. On completely dry, clean and polished surface, generously apply Alcoa sealant (Prevost #683527). Rinse thoroughly with water while surface is still wet in appearance (have water source ready as the dry time is very short, usually less than 2 minutes).
7. For best results, finish by wiping the surface with a clean rag to remove excess water, then allow surface to dry.

CAUTION

Dura-Bright is a special surface treatment that does not require polishing. Do not use abrasives, abrasive brushes steel wool scouring pads or strong chemicals on Dura-Bright wheels.

Do not use Alcoa Aluminum care system on Dura-Bright wheels, clean regularly with high pressure water jet and mild detergent.

Clean aluminum wheels as required to maintain original look.

WARNING

Wheel surfaces may have sharp or cutting edges that may cause injury to the hands. To prevent contact with sharp edges, it is strongly recommended to wear rubber gloves when washing or polishing wheels.

6. WHEEL STRAIGHTNESS TEST

1. Slightly raise axle to be checked and place a safety support underneath;
2. Check wheel lateral run-out. Install a dial gauge as shown in figure 4, then rotate the wheel by hand one full turn. As the wheel turns, note any variation on the dial gauge;

CAUTION

Damage to the dial gauge could occur if it strikes a wheel balancing weight.

3. If the variation in lateral run-out exceeds 0.0625 inch (1,6 mm), the wheel must be replaced.

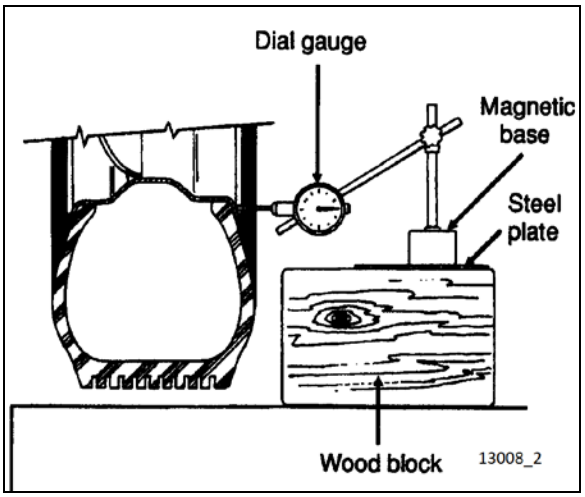

FIGURE 4: DIAL GAUGE INSTALLATION

If doubt exists whether wheel or hub is distorted, hub may be checked as follows:

- Replace the existing wheel with a wheel known to be correct;
- Check wheel lateral run-out as outlined in step 2;
- If, within specifications, the hub is correct but the suspected wheel must be replaced.

WARNING

NEVER STRAIGHTEN ALUMINUM WHEELS. Never heat aluminum wheels to repair damages incurred after hitting a curb or resulting from other causes. The special alloy in wheels has been heat treated, and any uncontrolled heating could alter wheel structure. Furthermore, never weld aluminum-forged wheels for any reason whatsoever.

7. WHEEL STUDS

Stripped threads may be the result of excessive torque or may have been damaged during wheel installation when placing the wheel over the studs. A stud having damaged threads must be replaced. Broken studs are a direct result of operating with loose stud nuts or improperly seated wheels. When a broken stud is replaced, the adjacent studs, on each side of the broken one must also be replaced since they could have been subjected to excessive strain and may be fatigued.

When installing wheel studs to hubs, check nuts retaining the wheel stud to wheel hub and replace if they are deformed, damaged or severely corroded. Install nut (and washer where applicable) to new stud.

TORQUE: 450-500 lb-ft (610-678 Nm)

60 nuts

7.1 DRIVE AXLES WHEEL STUDS

Hub-mounted wheels are mounted with M22x1.5 studs and an M22 flange nut.

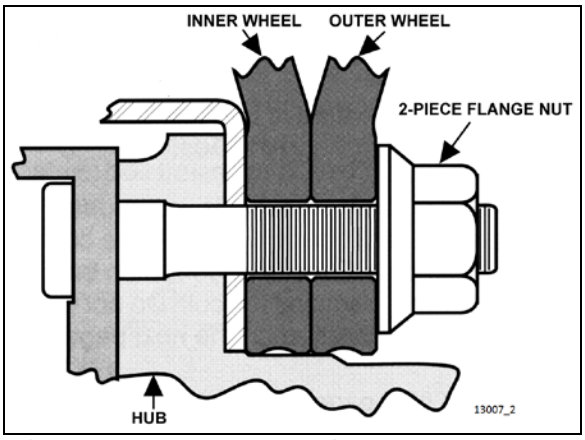

FIGURE 5: DRIVE AXLE WHEELS

7.2 FRONT AND TAG AXLE WHEEL STUDS

Wheel is hub mounted on front and tag axle (M22x1.5 thread).

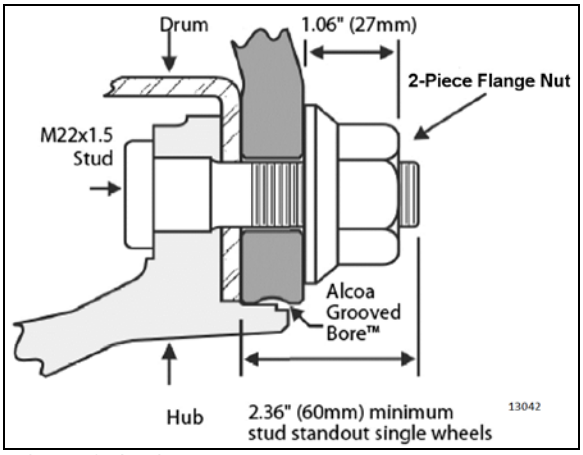

FIGURE 6: SINGLE WHEEL

NOTE
Wheel studs and nuts must be kept free from grease and oil. No lubricant whatsoever should be used.

8. HUB MOUNTED WHEELS

Wheel surfaces in contact with hubs, nuts or other wheels should be kept free of all rust, grease and paint (except for initial “E” coat protection, applied to stop rusting and to facilitate wheel removal). The reason for this is to assure that all faces are clamped together without buildup of any coating. The threads of the wheel studs and the wheel nuts should be clean and undamaged.

NOTE
When painting wheels, make sure to mask all surfaces identified above.

Using a calibrated torque wrench, tighten wheel nuts. Do not use power tools or long bars for tightening. Tighten wheel nuts alternately as shown in figure 3.

TORQUE: 450-500 lb-ft (610-678 Nm)

NOTE
Tightening should not be done immediately after prolonged braking or when wheel ends are hot.

Check wheel nut torque at every 100 miles (160 km) for 500 miles (800 km) after fitting wheels. Let cool before checking. If any relaxation of the initial torque has occurred, retighten. Relaxation of initial torque may occur because of the “bedding down” of the hub and wheel surfaces.

NOTE
Torque relaxation occurs when wheel ends are hot but should revert to original setting when cool. Retightening when hot will produce a higher torque reading than recommended.

8.1 CARE OF WHEELS

Check for cracks in wheels, especially around the fixing holes, studs, nuts and washers. If in doubt, renew.

Do not simply retighten very loose wheel fixings or wheels that are continually becoming loose. Find out why they are loose and whether any damage has been caused.

Use trained personnel and keep records of all attention to wheels and fixings, including which parts were renewed and when.

9. TAG AXLE WHEEL HUBS

The FAG unitized hub bearings used on the tag axle are non-serviceable items. Bearings are pre-adjusted, lubricated and have seals fitted as part of the manufacturing process. The bearings are greased for life and there is no need or facility for re-lubrication.

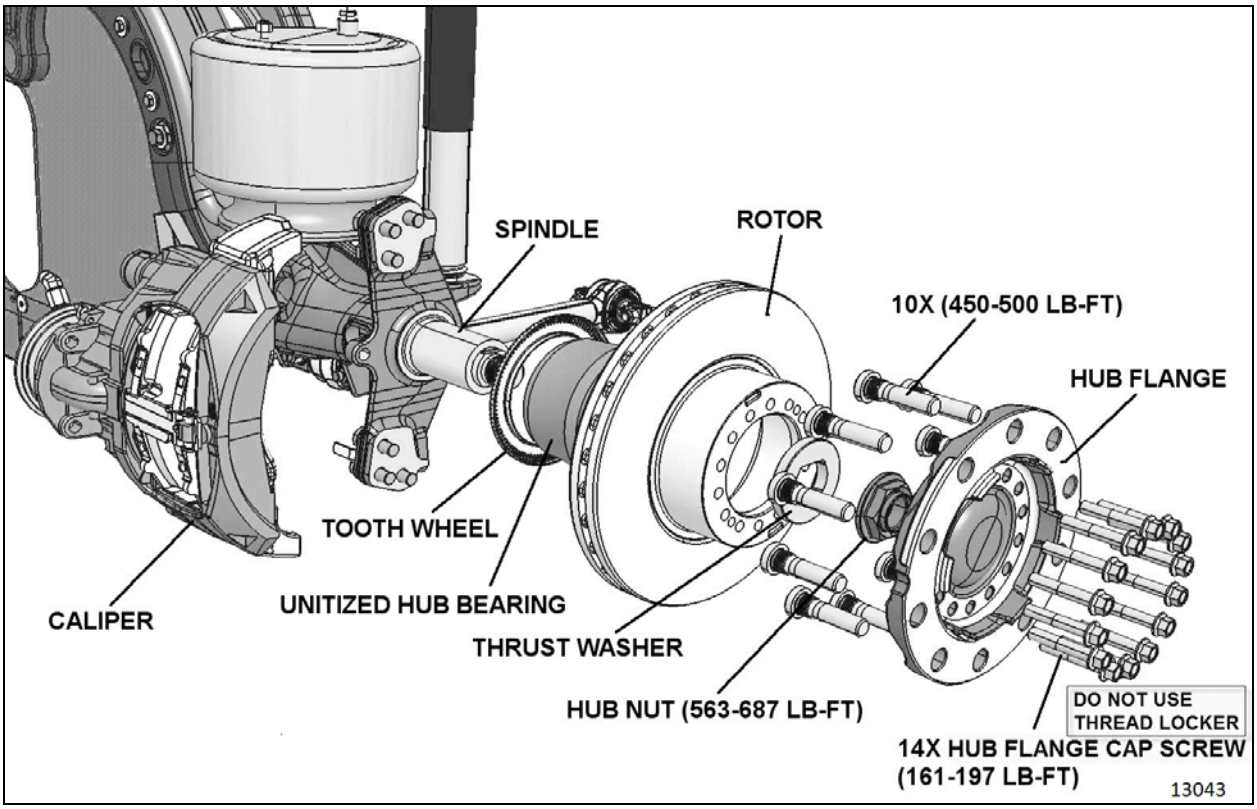

FIGURE 7: TAG AXLE HUB AND ROTOR ASSEMBLY

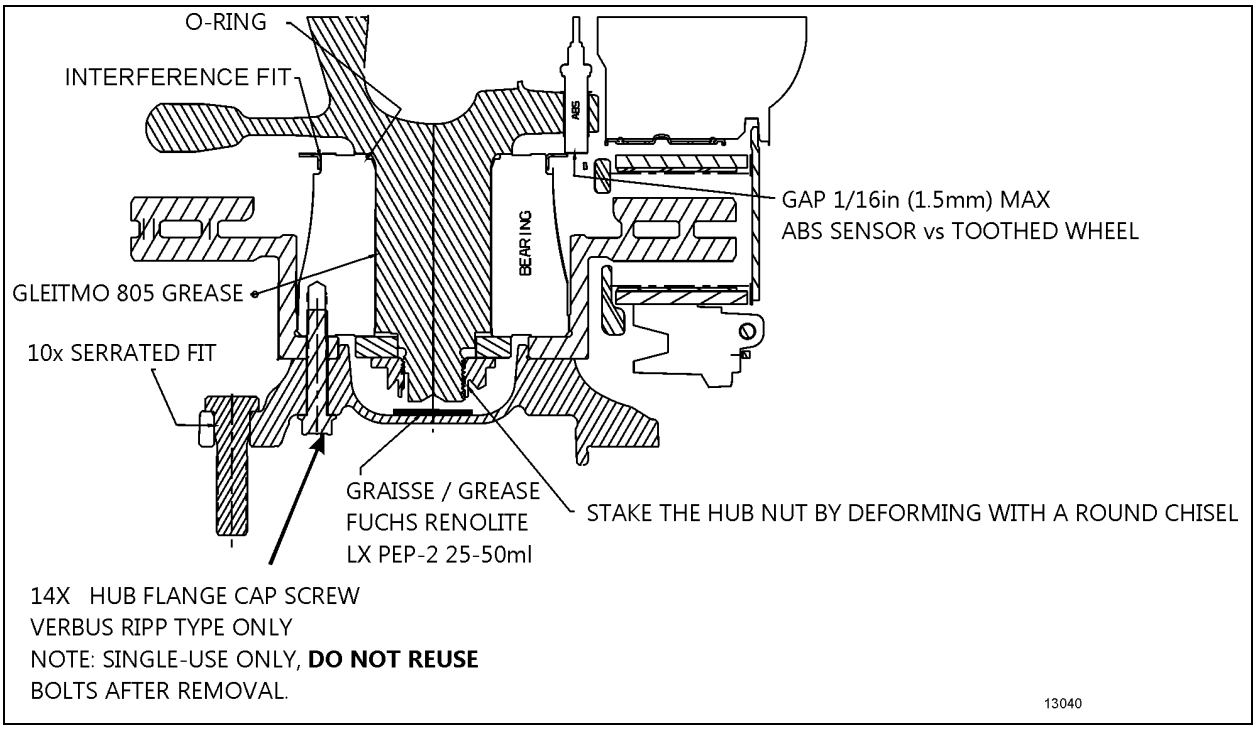

FIGURE 8: TAG AXLE UNITIZED BEARING & WHEEL HUB

9.1 TAG AXLE HUB BEARING INSPECTION

MAINTENANCE

Tag axle unitized bearing

Unitized bearing inspection should be made at the intervals specified by the Lubrication And Servicing Schedule in Section 24: LUBRICATION & SERVICING..

1. Apply parking brake, raise wheels off the ground and support axle on stands.
2. When the wheels are raised, they should revolve quite freely without roughness.
3. Place magnetic base of a dial indicator on brake caliper and position dial indicator stem against a convenient marked spot on face of hub flange.
4. With dial indicator in position pull hard but steadily on hub flange and oscillate at same time until a steady reading is achieved.
5. Without releasing the pressure, turn bearing so that dial indicator stem contacts marked spot and note reading on indicator.
6. Push bearing flange hard and oscillate as before until a steady reading is achieved.
7. Without releasing the pressure, turn bearing so that indicator stem again contacts the marked spot and note new reading on indicator.
8. The difference between readings is the amount of mounted end play in bearing unit.
9. Refer to the following table for allowed end plays:

New Tag Axle Unitized Hub Bearing Axial Endplay	
Maximum axial clearance/end play	0.0024 inch (0.061mm) based on clamp load of 20000 lbf (90kN).
Tag Axle Unitized Hub Bearing Axial Endplay In Service	
• If the endplay is between 0 – 0.002 in (0 – 0.05 mm), the inspection is complete. • If the endplay is greater than 0.002 in (0.05 mm), but less than 0.008 in (0.20mm), check and retighten the wheel bearing adjusting nut. Again check endplay to make sure that the clamping process is done properly. • If the endplay is equal to or greater than 0.008 in (0.20mm), replace the unitized hub bearing as soon as possible since the hub assembly may not be safe to operate.	

9.2 TAG AXLE HUB BEARING REMOVAL

1. Stop engine and apply parking brake.
2. Loosen wheel nuts about one turn (do not remove the nuts). This is not necessary if equipped with hydraulic powered gun.
3. Raise the vehicle by its jacking points on the body. See Section 18, *"Body",* under heading *"Vehicle Jacking Points".*
4. Unscrew 10 wheel hex stud nuts and remove the wheel.
5. Unscrew 14 hub flange hex cap screws. **Discard hub flange cap screws (single-use only)**.
6. Remove hub flange and rotor.
7. Unscrew hub nut.
8. Remove hub nut and thrust washer.

9.3 TAG AXLE HUB BEARING INSTALLATION

1. Clean spindle using EFX degreaser (Prevost #685313)
2. Screw insertion tool onto spindle (FIGURE 9).

FIGURE 9: INSERTION TOOL PREVOST P/N 491115

3. Apply a thin layer of antifriction/antifretting lubricant on spindle where bearing will be located (use Gleitmo 805 grease, Prevost #685274).

FIGURE 10: APPLY GLEITMO 805 GREASE

4. Slip unitized hub bearing over spindle.

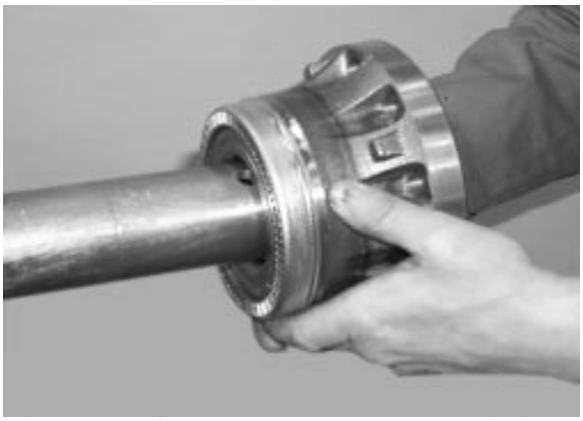

FIGURE 11: SLIP UNITIZED HUB BEARING OVER SPINDLE

NOTE

If the inner rings are not properly guided (i.e. not in line to spindle) there may occur a seizing between inner ring and spindle before the assembly be completed. By pushing abruptly the hub unit back, there is a risk of separation of inner rings. The clip can be dislodged as per the two pictures below.

Always use the insertion tool PREVOST p/n 491115

5. Clean thrust washer both sides and hub nut using EFX degreaser.
6. Install thrust washer and hub nut then torque hub nut.

TORQUE: 563-687 lb-ft (763-931 Nm)

7. Rotate bearing, minimum 10 revolutions necessary (simultaneous rotation till final clamp torque is achieved.
8. Stake the hub nut by deforming with a round nosed chisel.

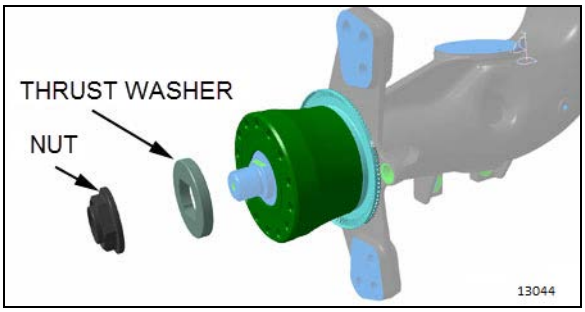

FIGURE 12: INSTALL THRUST WASHER AND HUB NUT

9. Clean hub bearing, rotor and hub flange clamping surfaces using EFX degreaser.

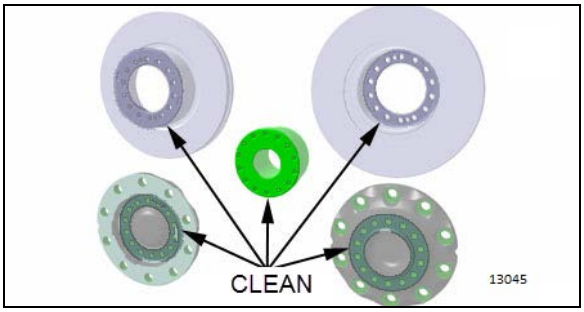

FIGURE 13: CLEANING HUB BEARING, ROTOR AND HUB FLANGE CLAMPING SURFACES

10. Install rotor onto hub bearing.

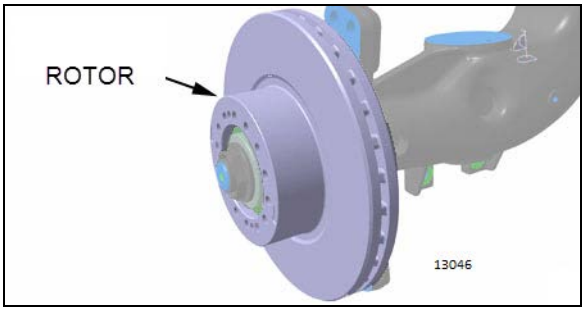

FIGURE 14: ROTOR

11. Add some grease (25-50 ml) (Fuchs Renolite LX PEP-2) (Prevost #685325) into the bottom of the hub flange cap. Mount hub flange onto rotor.

12. Secure hub flange and rotor to unitized hub bearing using 14 new cap screws (single-use only). Refer to FIGURE 16 for tightening sequence.

    TORQUE: 161-197 lb-ft (218-267 Nm)

13. Once the hub flange has been correctly fitted; it is necessary to check the axial run out of the brake disc. *Refer to 9.1 tag axle Hub Bearing Inspection.*

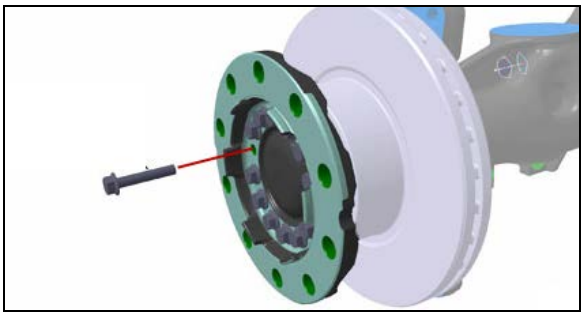

FIGURE 15: HUB FLANGE HEX CAP SCREW

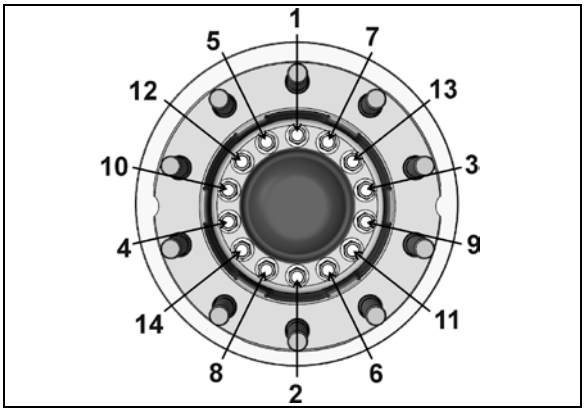

FIGURE 16: HUB FLANGE HEX CAP SCREW TIGHTENING SEQUENCE

14. Mount the wheel over studs, being careful not to damage stud threads.

15. Screw in the hex stud nuts (refer to FIGURE 3 for sequence) so that wheel will position itself concentrically with hub. This is important, otherwise wheel may be eccentric with hub and will not run straight. In this initial step, slightly tighten the nuts to correctly position the wheel.

16. Tighten stud nuts progressively as shown in Figure 3. The final tightening should be done with a torque wrench. Tighten stud nuts.

    TORQUE: 450-500 lb-ft (610-678 Nm)

10. FRONT AXLE WHEEL HUBS

The FAG unitized hub bearings used on the NDS range of axles, are non-serviceable items. Bearings are pre-adjusted, lubricated and have seals fitted as part of the manufacturing process. The bearings are greased for life and there is no need or facility for re-lubrication.

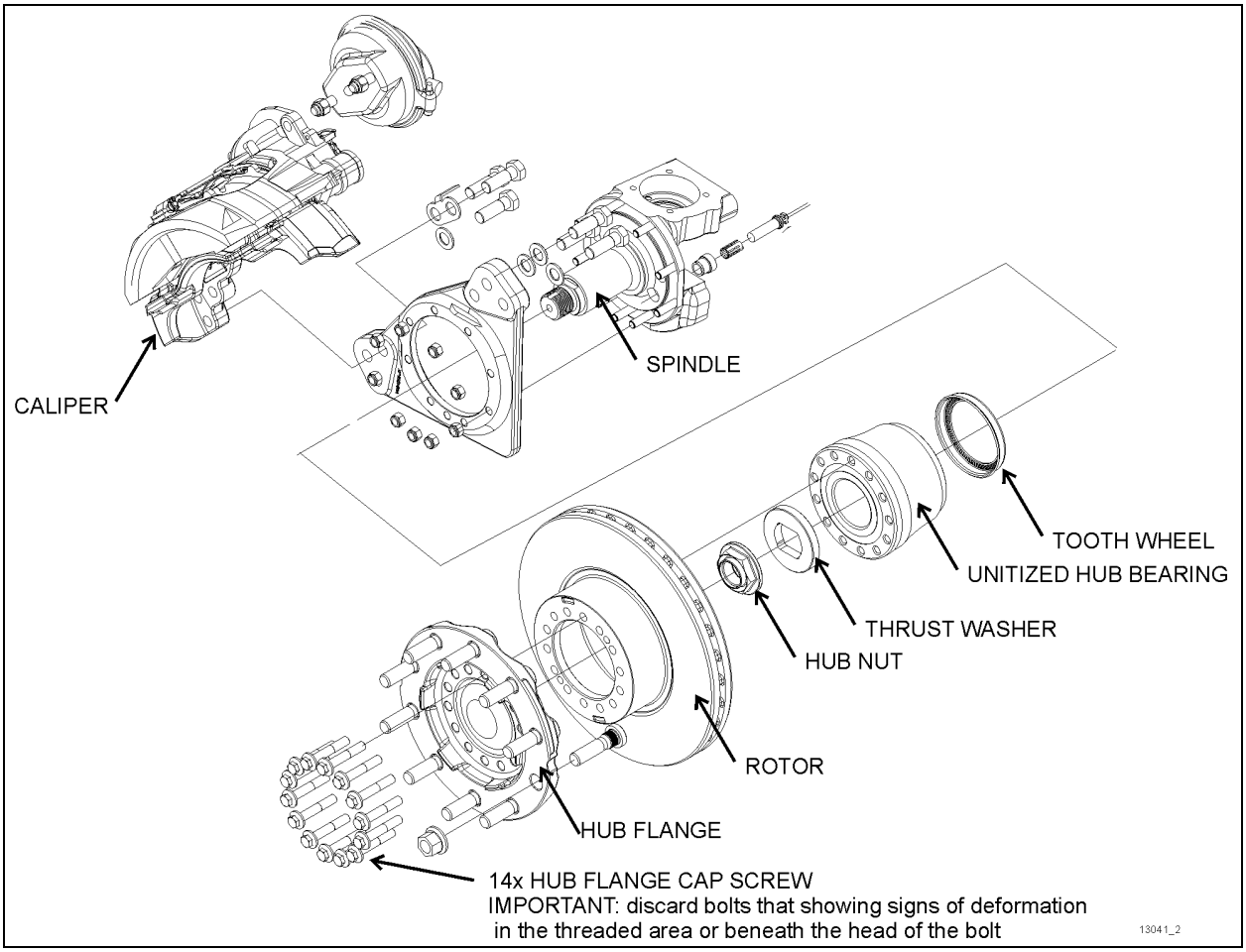

FIGURE 17: FRONT AXLE HUB AND ROTOR ASSEMBLY

10.1 FRONT AXLE HUB BEARING INSPECTION

MAINTENANCE

Front axle unitized bearing

Unitized bearing inspection should be made at the intervals specified by the Lubrication And Servicing Schedule in Section 24: LUBRICATION & SERVICING..

1. Apply parking brake, raise wheels off the ground and support axle on stands.
2. When the wheels are raised, they should revolve quite freely without roughness.
3. Place magnetic base of a dial indicator on brake caliper and position dial indicator stem against a convenient marked spot on face of hub flange.
4. With dial indicator in position pull hard but steadily on hub flange and oscillate at same time until a steady reading is achieved.
5. Without releasing the pressure, turn bearing so that dial indicator stem contacts marked spot and note reading on indicator.
6. Push bearing flange hard and oscillate as before until a steady reading is achieved.
7. Without releasing the pressure, turn bearing so that indicator stem again contacts the marked spot and note new reading on indicator.

8. The difference between readings is the amount of mounted end play in bearing unit.
9. The mounted end play figure should not exceed:
   - **0.050 mm (0.002”)** for a new bearing,
   - **0.20 mm (0.008”)** for a bearing which has been in service.

NOTE
If original bearing unit is re-fitted, and end-float is measured at 1 mm, with hub not fully tightened to specified torque, then the retaining clip within the unit is damaged and a new unit must be fitted.

10.2 FRONT AXLE HUB BEARING REMOVAL

For detailed information on front axle wheel hub bearing removal, refer to the following manual included on your vehicle Technical Publications USB flash drive in PDF format:

Dana Parts & Service Instructions S84U Steer Axle HUB BEARING REWORK_ Manual NO 1963 A+B iss A.

See OVERHAUL PROCEDURES, HUB END DISASSEMBLY, pages No. B3, B4, B5 & B6.

10.3 FRONT AXLE HUB BEARING INSTALLATION

You can refer to the following manual included on your vehicle Technical Publications USB flash drive in PDF format:

Dana Parts & Service Instructions S84U Steer Axle HUB BEARING REWORK_ Manual NO 1963 A+B iss A.

See OVERHAUL PROCEDURES, HUB END REASSEMBLY, pages No. B23 up to B30.

1. Clean spindle using EFX degreaser (Prevost #685313).
2. Screw insertion tool onto spindle (FIGURE 18).

FIGURE 18: INSERTION TOOL PREVOST P/N 491115

3. Apply a thin layer of lubricant on spindle where bearing will be located, use Gleitmo 805 grease (Prevost #685274).

FIGURE 19: APPLY GLEITMO 805 GREASE

4. Slide unitized hub bearing over spindle.

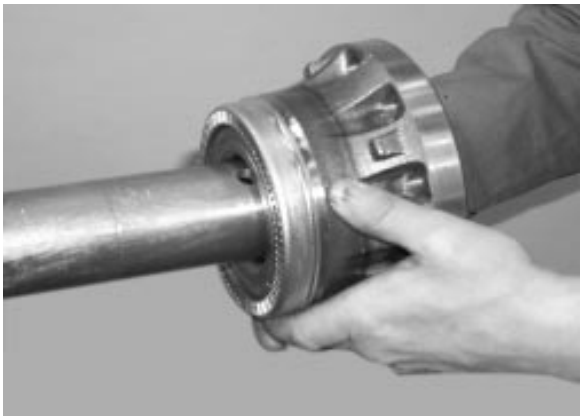

FIGURE 20: SLIDE UNITIZED HUB BEARING OVER SPINDLE

NOTE

If the inner rings are not properly guided (i.e. not in line to spindle) there may occur a seizing between inner ring and spindle before the assembly be completed. By pushing abruptly the hub unit back, there is a risk of separation of inner rings. The clip can be dislodged as per the two pictures below.

Always use the insertion tool PREVOST p/n 491115

5. Clean thrust washer both sides and hub nut using EFX degreaser.

6. Install thrust washer and hub nut then tighten hub nut to specified torque. Rotate unitized hub bearing whilst tightening. Do not stake hub nut at this stage.

TORQUE: 575-625 lb-ft (780-847 Nm)

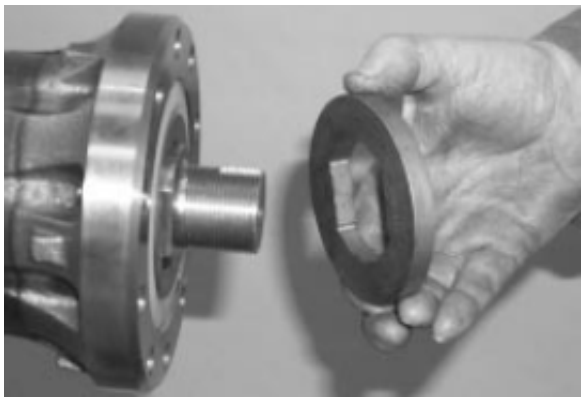

FIGURE 21: INSTALL THRUST WASHER

7. Check the bearing end play as described in *10.1 FRONT AXLE Hub Bearing Inspection*

8. Stake the hub nut by deforming with a round nosed chisel.

9. Clean hub bearing, rotor and hub flange clamping surfaces using EFX degreaser.

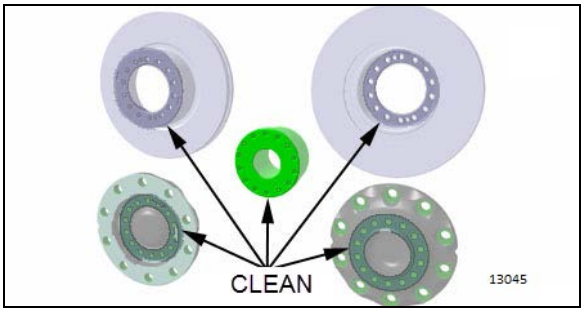

FIGURE 22: CLEANING HUB BEARING, ROTOR AND HUB FLANGE CLAMPING SURFACES

10. Install rotor onto hub bearing.

11. Add some grease (25-50 ml) (Fuchs Renolite LX PEP-2) (Prevost #685325) into the bottom of the hub flange cap. Mount hub flange onto rotor.

12. Secure hub flange and rotor to unitized hub bearing using 14 hub flange cap screws. Refer to FIGURE 24 for tightening sequence.

TORQUE: 174-192 lb-ft (236-260 Nm)

NOTE: discard bolts that start to show signs of deformation in the threaded area or beneath the head of the bolt.

13. Once the hub flange has been correctly fitted; it is necessary to check the axial run out of the brake disc. Refer to page No.B29 of the following manual: included on your vehicle Technical Publications USB flash drive in PDF format to complete this step:

Dana Parts & Service Instructions S84U Steer Axle HUB BEARING REWORK_ Manual NO 1963 A+B iss A

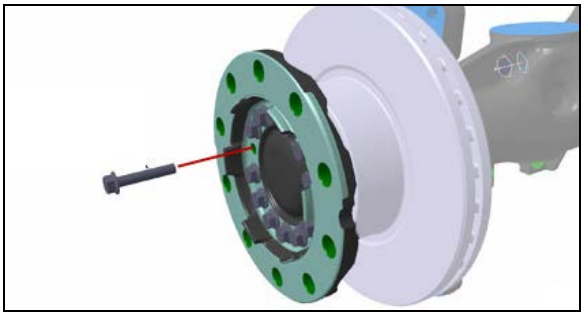

FIGURE 23: HUB FLANGE HEX CAP SCREW

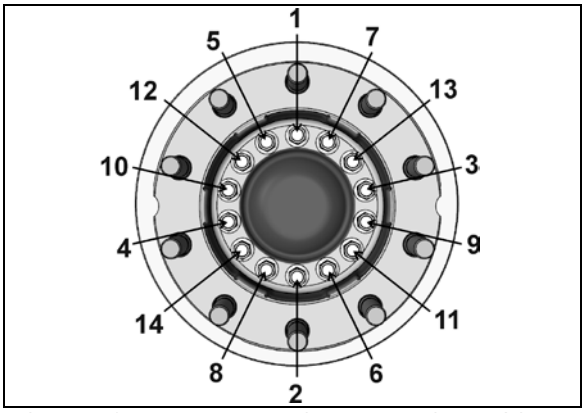

FIGURE 24: HUB FLANGE HEX CAP SCREW TIGHTENING SEQUENCE

14. Mount the wheel over studs, being careful not to damage stud threads.

15. Screw in the hex stud nuts (refer to FIGURE 3 for sequence) so that wheel will position itself concentrically with hub. This is important, otherwise wheel may be eccentric with hub and will not run straight. In this initial step, slightly tighten the nuts to correctly position the wheel.

16. Tighten stud nuts progressively as shown in FIGURE 3. The final tightening should be done with a torque wrench.

TORQUE: 450-500 lb-ft (610-678 Nm)

11. MERITOR DRIVE AXLE WHEEL HUBS

Drive wheels use a single oil-seal assembly. They are lubricated from the oil supply in the differential housing. Bearings are tapered rollers, adjustable to compensate wear. Maintain differential oil level with general-purpose gear lubricant (refer to Section 24 *"Lubrication"* for proper oil grade selection) to ensure adequate oil supply to wheel bearings at all times.

Additional information is found in the following manuals, included on your vehicle Technical Publications USB flash drive:

- *Meritor Maintenance Manual 23A – Bus and Coach Rear Drive Axles*
- *Meritor Maintenance Manual 5A – single reduction differential carriers*

11.1 BEARING CHECK/ADJUSTMENT

To adjust drive wheel bearings, refer to "Adjustment – Wheel bearings" heading in Meritor Maintenance Manual 23A – Bus and Coach Rear Drive Axles.

MAINTENANCE

Drive axle bearing end play

Check drive axle bearing end play at the intervals specified by the Lubrication And Servicing Schedule in Section 24: LUBRICATION & SERVICING..

Refer to "Adjustment – Wheel bearings" heading in Meritor Maintenance Manual 23A – Bus and Coach Rear Drive Axles.

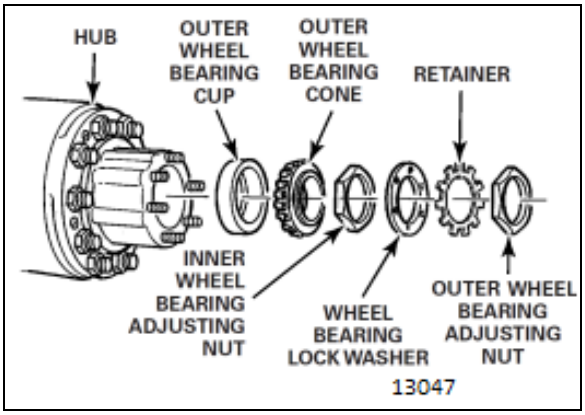

FIGURE 25: DRIVE AXLE WHEEL HUB

11.2 DISASSEMBLY AND REPAIR

Additional information is found in the following manual:

- ***Meritor Maintenance Manual 23A – Bus and Coach Rear Drive Axles***

1. Jack vehicle and remove axle shaft as indicated in *"Meritor - Maintenance Manual No. 23A"* annexed to Section 11 of this manual.
2. Remove wheels and tires.

NOTE
It is good practice to mark position of the wheel on the axle before removal and replace wheel at the same position during reinstallation.

3. Remove lock nut, lock ring and adjusting nut from axle housing to prevent the outer bearing from falling out. Remove outer bearing cone and roller assembly.
4. Remove screws attaching inner oil seal retainer to hub, and remove inner oil seal assembly. Remove inner bearing cone and roller assembly. Bearing cups can be separated from the hub using a hammer and a long brass drift.
5. Thoroughly clean all parts. Bearing cone and roller assemblies can be cleaned in a suitable cleaning solvent using a stiff brush to remove old lubricant.
6. In case that excessive wear, deterioration, cracking or pitting is present on the bearing cups, rollers or cones, the bearings should be replaced. Seals should be replaced each time they are removed from the hub. To install new oil seal, use a suitable adapter and drive the seal into the retainer bore until it bottoms.
7. When installing wheel on spindle, center the wheel hub with spindle to avoid damaging the seal with the end of the spindle. Push wheel straight over the spindle until inside diameter of seal press fits on wiper ring. Fill hub cavity with general-purpose gear lubricant (refer to Section 24 *"Lubrication"* for proper oil grade selection). Lubricate, then install outer bearing cone. Adjust bearing and lock.
8. Assemble axle flange to axle using a new gasket. Apply sealant in stud area. After both wheels have been assembled according to above procedure, fill the differential with the recommended lubricant to the proper factory recommended level.

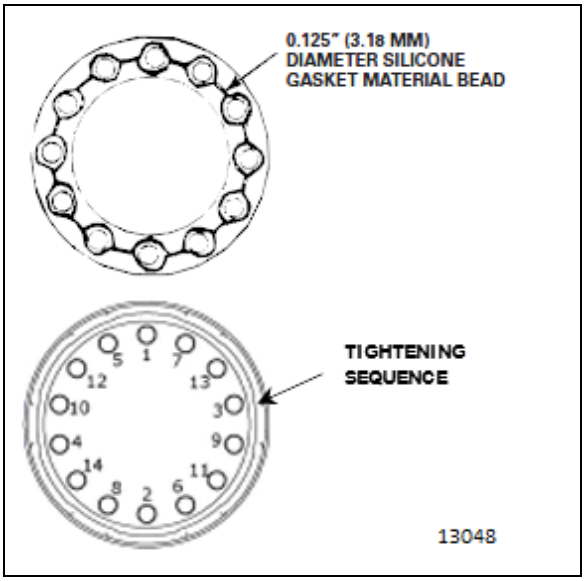

FIGURE 26: AXLE FLANGE TIGHTENING SEQUENCE

NOTE
During regular inspection, do not forget to check lubricant level in differential. Clean thoroughly or replace vent as required.

12. ZF DRIVE AXLE WHEEL HUBS

The ZF A132 hypoid single reduction drive axle hub (**FIGURE 27**) is fitted with unitized bearing known as compact bearing in ZF's literature.

12.1 COMPACT BEARING (HUB UNIT) AXIAL PLAY CHECK

Check the compact bearing (hub unit) axial play at the intervals specified by the Lubrication And Servicing Schedule in Section 24: LUBRICATION & SERVICING. Furthermore, the bearing must be checked in case of brake disk change, ABS fault message and rising noise level at increasing speed.

Perform compact bearing (hub unit) axial play check as described in paragraph 6.2 HOW TO CHECK THE AXIAL PLAY of the following manual: OPERATING INSTRUCTIONS ZF AXLE A132 (version with US hub) #5871 207 982 EN.

MAINTENANCE

Compact bearing (hub unit) axial play

Check the bearing axial play at the intervals specified by the Lubrication And Servicing Schedule in Section 24: LUBRICATION & SERVICING.

12.2 COMPACT BEARING (HUB UNIT) GREASE CHANGE

When grease is changed within the scope of the maintenance, it is necessary to completely remove the compact bearing.

Perform compact bearing (hub unit) grease change as described in paragraph 7.3 GREASE CHANGE IN THE HUB of the following manual: OPERATING INSTRUCTIONS ZF AXLE A132 (version with US hub) #5871 207 982 EN.

MAINTENANCE

Compact bearing (hub unit) grease change – ZF Lubricant class 12H

The compact bearing grease must be change at the intervals specified by the Lubrication And Servicing Schedule in Section 24: LUBRICATION & SERVICING.

The list of approved Lubricant Class 12H grease types is found in ZF's list of lubricants TE-ML 12.

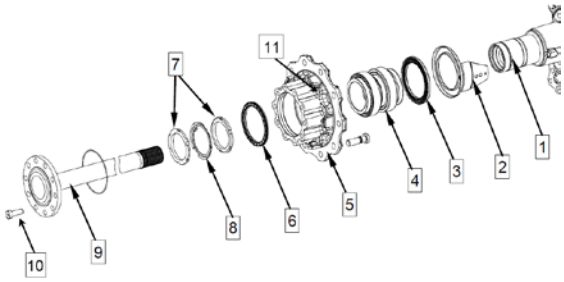

FIGURE 27: ZF A-132 DRIVE AXLE HUB ASSEMBLY

1 hub carrier
2 screen sheet
3 shaft seal (with impulse disc)
4 compact bearing (hub unit)
5 hub
6 shaft seal
7 slotted nut
8 locking plate
9 flange shaft
10 cap screw M18x1.5x50mm G10.9
TORQUE= 325 lb-ft (441 Nm)
(use 14mm hex socket driver "Allen")

14mm hex socket driver "Allen"

11 cap screw Torx M16x1.5x60,
TORQUE= 221 lb-ft (300 Nm)
(use E20 Torx socket)

E20 Torx socket

13. SPARE WHEEL

Tire failure is a rare event if tires are properly cared for. In case of a flat tire, move vehicle a safe distance away from traffic and apply parking brake. Remember to use the hazard flashers and according to the Highway Code regulations, set up the triangular reflectors (see *"Emergency Warning Reflectors"* in the Operator's Manual) at an adequate distance, to warn incoming motorists. This kit is located at the ceiling of the forward baggage compartment, on the R.H. side for H3 series vehicles and in the front service compartment on X3 Series.

The spare wheel is stored in a dedicated compartment behind the front bumper. To access, pull the release handle located in the front service compartment. Although the bumper is heavy, sprung hinges permit one person operation.

When closing bumper compartment, make sure bumper is securely installed.

NOTE

Converted vehicles are not equipped with a spare wheel. Access to compartment is also obtained by pulling the release handle located in the front service compartment.

WARNING

This compartment has not been designed for storage. Never leave loose objects in this area since they may interfere with steering linkage mechanism. Make sure bumper is safely locked in place after closing the compartment.

13.1 SUPER SINGLE TIRE REPLACEMENT

Increase tire pressure to 125 PSI If you are using the supplied 365/70 R 22.5 spare tire to replace a super single tire on the drive axle.

WARNING

- Spare tire pressure should be increased to 125 PSI.
- Do not exceed 80km/h (50 MPH)
- Repair and re-install original super-single wheel and tire **as soon as possible,** in this particular configuration, spare wheel is for temporary use only.
- While the spare tire is installed, avoid sharp turns, sudden acceleration and braking.

13.2 PULLING OUT SPARE WHEEL

To remove the spare on X3 series vehicles, untighten the pressure screw holding the tire in place, then press down on the spring loaded locking pin located at the top of the retaining bracket and remove the bracket.

On H3 series vehicles, Untighten the pressure screw holding the tire in place. Lift the pressure screw arm and move to the side.

Using the strap, pull the spare out of the compartment (refer to the following illustrations). Rollers ease manipulation. Remove the protective cover. Install the flat in place of the spare by reversing the procedure. Do not forget to have the flat repaired as soon as possible.

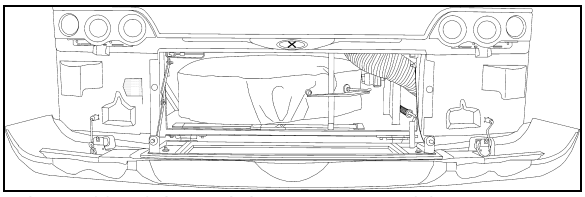

FIGURE 28: X3 SERIES SPARE WHEEL COMPARTMENT
18614

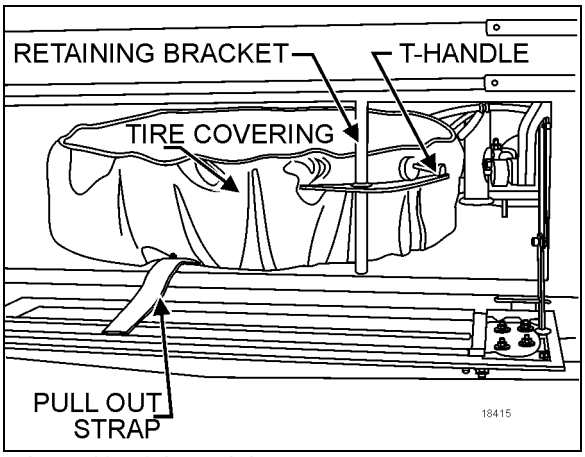

FIGURE 29: X3 SERIES SPARE WHEEL AND TIRE
18415

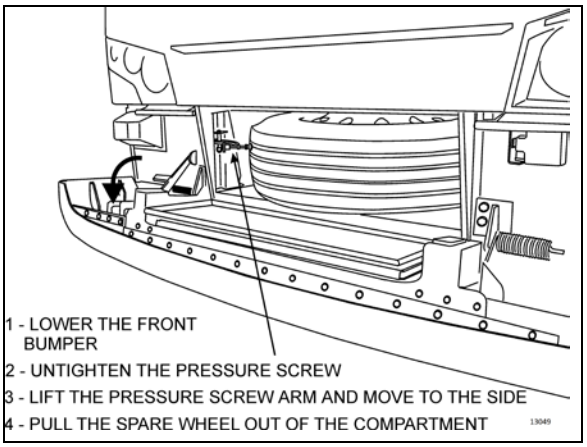

FIGURE 30: H3 SERIES SPARE WHEEL AND TIRE

NOTE

On H3 series vehicles, the pressure screw arm must return to its initial position otherwise, the bumper cannot be latched in upper

position.

NOTE

The jack and wheelnut wrench are stored in the front service compartment for X3 series vehicles and at the ceiling of the forward baggage compartment, on the R.H. side for H3 series vehicles

The jack/tools kit contains a:

1. 30 ton hydraulic jack;
2. Wheel nut wrench and lever.

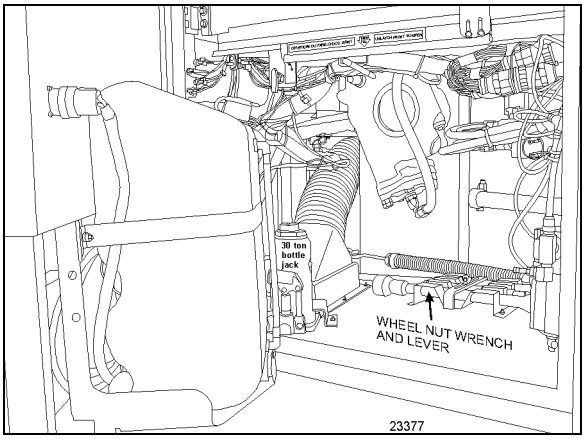

FIGURE 31: FRONT SERVICE COMPARTMENT OF A X3 SERIES VEHICLE

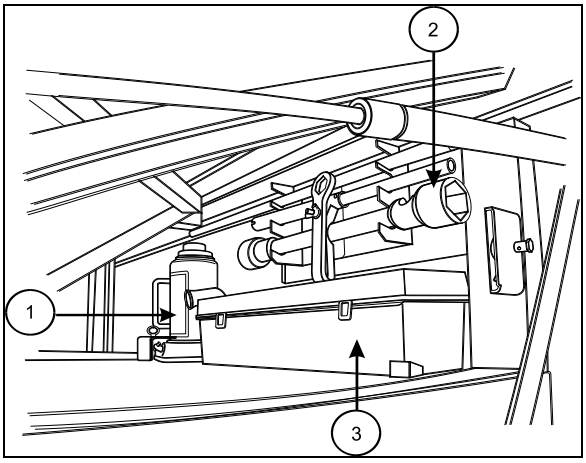

Figure 32: forward compartment of H3 series vehicle with jack, wrench and reflector kit.

NOTE

Check the inflation pressure of the spare tire periodically to keep it ready for use. Inflate spare tire to the pressure of the tire, which has the highest pressure on the vehicle. When installing, deflate to correct pressure if necessary.

13.3 CHANGING A FLAT TIRE (COACHES ONLY)

In case of flat tire, refer to appropriate procedure under “Wheel Maintenance" heading in this section.

NOTE

For hydraulic jack placement, refer to Section 18 "Body", under heading "Vehicle Jacking Points".

DANGER

Place jack on stable and level ground; if necessary, place a board under the jack. Do not raise the vehicle until you are sure the jack is securely engaged.

WARNING

To prevent personal injury and/or equipment damage, use only the recommended jacking points. Passengers must not remain inside vehicle while wheel is being replaced.

CAUTION

Adjust tire pressure according to the appropriate cold tire inflation-pressure.

NOTE

Store damaged wheel in spare tire compartment. Repair and balance the flat tire as soon as possible.

13.4 CHANGING A FLAT TIRE (VIP & CONVERTED BUS SHELLS)

In case of a flat tire, turn *ON* the hazard flashers and bring the vehicle to a stop on the side of the road. Apply the parking brake. Make sure the vehicle is parked safely away from traffic. Set up the triangular reflectors in accordance with applicable highway regulations.

It is strongly suggested that you **do not** attempt to change a wheel, the wheel and tire are very heavy and there is usually no space available to put the removed flat. Also, the wheel nuts, especially those on inner dual, can become very tight after being on for only a short time. Often a heavy air wrench will be required to get the nuts loose. Get help via CB radio or cellular phone,

There are truck tire service enterprises all over the country that can bring a wheel and make the change safely.

NOTE
Bus shell vehicles contain no spare wheel. Access to compartment is obtained by pulling the release handle located in the front service compartment.

WARNING

The reclining bumper compartment has not been designed for storage. Never leave loose objects in this area since they may interfere with steering linkage mechanism. Make sure bumper is safely locked in place after closing the compartment.

13.5 SPARE WHEEL MAINTENANCE

Maintenance of the spare wheel and tire consists in ensuring that tire inflation pressure is the same as the tire on the coach that has the highest inflation pressure (refer to “Specifications” in this section for the recommended tire inflation pressure). Inspect rim to ensure that there is no important corrosion. In addition, check if spare wheel covering is in good condition and check that spare tire is securely fastened in compartment.

14. VALVE INSTALLATION

CAUTION

When replacing valve stems, lubricate the threads and O-ring with Permatex Dielectric Tune-Up grease (Prevost #**685324)** to avoid galvanic corrosion.

Tip: When installing the valves, use as needed a 15mm wrench to hold the valve and block the rotation.

Steel Wheels	**All wheels** 8.25 inches wheel, valve **650017** 9 inches wheel, valve **650018** (shown) Install the valve in place. **Torque 31-39 lb-ft (42-53 Nm)**	 #Prevost **650018**	
Aluminum Wheels	**365 tire** Valve **650014** Install the valve in place. Torque **106-133 lb-in (12-15 Nm)**	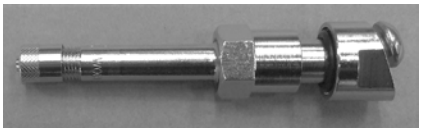 #Prevost **650014**	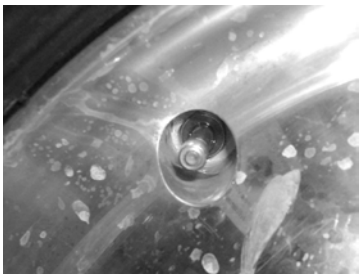
	315 tire Valve **650015** Install the valve in place. Torque **106-133 lb-in (12-15 Nm)** Add an 1 3/8'' extension, **650201** for wheels on: -Front axle tire -Tag axle tire -Spare tire	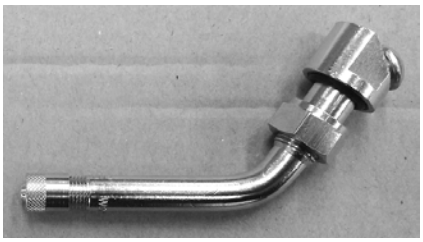 #Prevost **650015** #Prevost **650201**	

	<u>Super Single tire</u> Valve **650013** Install the valve in place. **Torque 106-133 lb-in (12-15 Nm)**	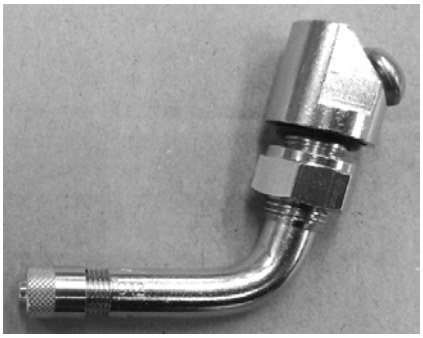 #Prevost **650013**	

14.1 TPMS SENSORS INSTALLATION

Check proper valve positioning before installing sensor onto valve (risk of damaging the sensor or air leaks).	
Pressure sensor #**560032.** Remove bar code with supplied removable tie-rap. **Make sure never to mix the bar code between the wheels. (bar code is linked to sensor)**	
Positioning the sensor on the wheel. Ensure that the sensor is well pressed onto the surface.	
Torx screw T-20 **TORQUE: 35 lb-in (4 Nm)** **IMPORTANT** -Put blue Loctite 243 to the threads. -Use the screw only once. -Replacement screw #**651084**.	
Install bar code and tie it up using wheel holes. Use supplied removable tie-rap.	

Apply decal facing the valve.

#651091 ENGLISH #651090 BILINGUAL

15. TIRE MAINTENANCE

The most critical factor in tire maintenance is proper inflation (Figure 33). No tire is impervious to loss of air pressure. To avoid the hazards of under inflation, always maintain tires at their recommended inflation pressure. Improper inflation decreases tire life.

NOTE
VIP & Converted Bus Shells vehicles are not at their maximum weight before their conversion and tire pressures are adjusted at lower level than the maximum allowed appearing on the DOT plate. Tires pressure must be re-adjusted once converted.

An under inflated tire builds up heat that can cause sudden tire destruction, resulting in improper vehicle handling and possible loss of vehicle control. At least once a week, before driving (when tires are cold), check inflation pressure on all the tires, including the spare tire. This is especially important in cases when different drivers operate the vehicle.

WARNING
Failure to maintain correct tire inflation pressure may result in sudden tire destruction, improper vehicle handling, and will cause rapid and irregular tire wear. Inflation pressure should be checked weekly and always before long distance trips.

15.1 INFLATION PRESSURE

- Vehicles equipped with BERU TPMS

On vehicles equipped with the Beru Tire Pressure Monitoring System (TPMS), it is better to use the TPMS display as the primary reference to judge when tire pressure need adjustment.

The TPMS presents pressure readings of each tire as a +/- deviation from the wanted target.

If a tire reads within +/- 3 PSI no adjustment is needed.

If a tire reads -4 PSI and below, re-inflate by the marked amount.

If a tire reads +4 PSI and above , deflate by the marked amount.

NOTE
Relying on the TPMS system is better than relying on a hand gage since the TPMS is temperature compensated and remain accurate no matter if the tires are cold or hot.

Tires take up to 3 hours to get down to ambient temperature after a ride. A common mistake consist of checking pressure while the tires have not fully cooled down which leads into under-inflated tires. Relying on the TPMS eliminates this mistake.

Running tires at optimal pressure reduces tire wear, improving safety and fuel economy.

The TPMS target pressures are factory set to equal the prevailing tire pressure at delivery time.

When tire pressures are increased to account for higher vehicle weight, the TPMS set point need to be increased accordingly.

- Vehicles not equipped with BERU TPMS

The condition and pressure of the tires can greatly affect both useful tire life and road safety.

At regular intervals, verify the tire pressures. Use an accurate tire pressure gauge when checking inflation pressures. Never exceed the maximum inflation pressure specified on each tire.

NOTE

Inflation pressure should be checked when tires are cold. Cold tire inflation pressure can be measured when a vehicle has not been driven for at least 3 hours or less than 1 mile (1.6 km). Driving, even for a short distance, causes tires to heat up and air pressure to increase. Check inflation pressure on all tires (including the spare tire) using an accurate tire gauge.

NOTE

The recommended tire inflation pressures are given in the applicable documents supplied with the vehicle. In addition, cold tire inflation pressures are listed on the Department of Transport's certification plate, affixed on the panel behind the driver's seat for H3 series vehicles and on the left side control panel for X3 series vehicles. For special tire selection, a "PREVOST COACH SPECIAL SPECIFICATION" chart is supplied with the vehicle and is affixed on the left wall near the driver's seat. Remember, tire inflation pressure must be adjusted according to vehicle loading - see table in "Coach Final Record"

CAUTION

These tire pressures are established in accordance with the maximum allowable load on each axle. A lower pressure is recommended if the axle load is less than the above specifications. Weigh vehicle fully loaded and pressurize according to tire manufacturer's recommendations. For other tire and wheel specifications, see Prevost tire pressure tabulation in "Coach Final Record".

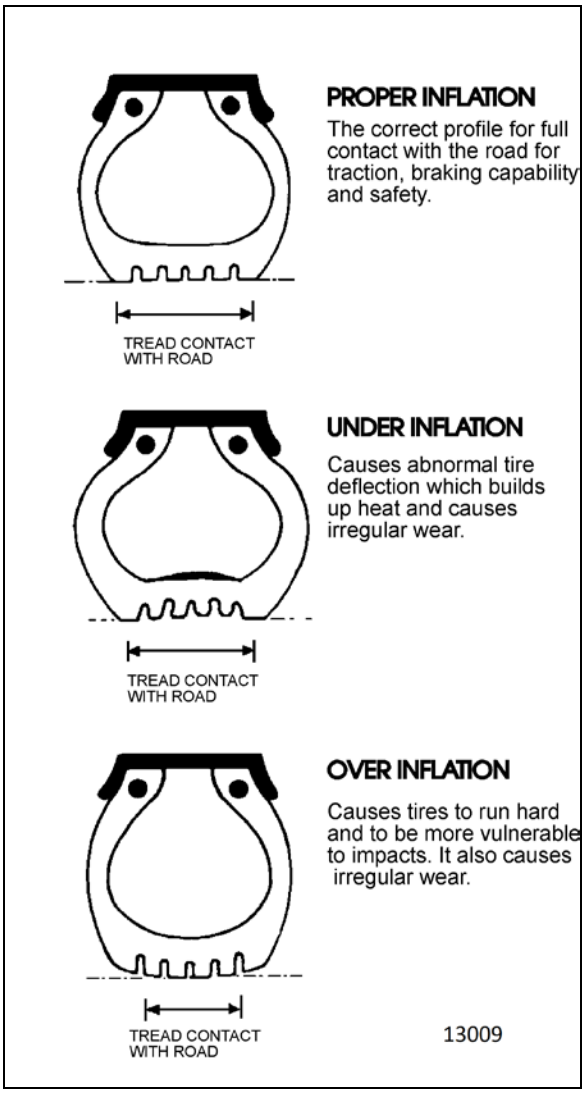

FIGURE 33: TIRE INFLATION

CAUTION

Never bleed air from hot tires as tires will then be under inflated. Use an accurate tire gauge to check pressures (Do not kick tires as an inflation check. This is an unreliable method).

WARNING

Incorrect tire pressures cause increased tire wear and adversely affect road holding of the vehicle, which may lead to loss of vehicle control.

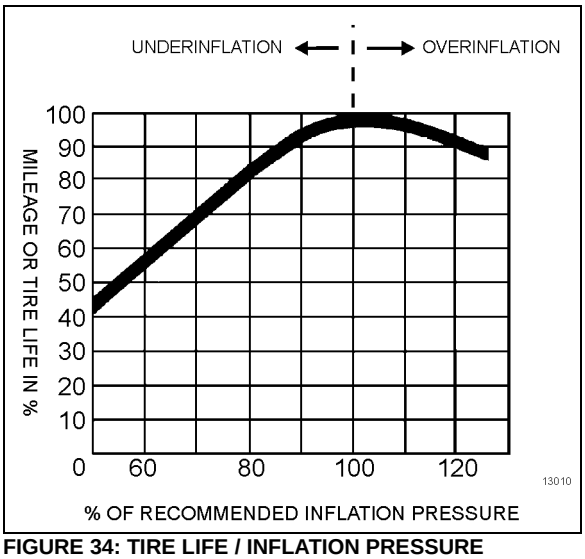

FIGURE 34: TIRE LIFE / INFLATION PRESSURE

WARNING

Recommended tire inflation pressures and maximum allowable loads apply to speeds up to 65 mph (105 km/h). Do not drive vehicle at a higher speed than 65 mph (105 km/h) or above the posted speed limit.

WARNING

All tires on the same axle should always be inflated to the same pressure. There should not be a difference in pressure between right and left tires on the same axle.

A 5 psi (35 kPa) under-inflation in one front tire can not only reduce vehicle maneuverability, but will create steering hazards which can lead to an accident.

15.2 TIRE MATCHING

Unmatched tires on drive axle will cause tire wear and scuffing, as well as possible damage to the drive unit. Consequently, It is recommended that tires be matched within 1/8" (3 mm) of the same rolling radius.

NOTE

It is recommended that all tires on coach be of the same type.

15.3 WHEEL BALANCING

Before balancing, wheels must be clean and free from all foreign matter. The tires should be in good condition and properly mounted. An unbalanced wheel can be due to a bent wheel or improper mounting. Before removing the wheel from the vehicle, check for swaying movement and if necessary, check the wheel lateral run-out as outlined under heading *"Wheel Straightness Check".*

WARNING

When balancing wheel and tire assemblies, it is strongly recommended to closely follow instructions covering the operation of wheel balancer.

CAUTION

A maximum of 16-oz (450 g) of balancing weight is recommended. If more weight is necessary, check and correct the cause.

15.4 TIRE ROTATION

Radial tires should be rotated only when necessary. If the tires are wearing evenly, there is no need to rotate. If irregular wear becomes apparent or if the wear rate on the tires is perceptively different (from axle to axle), then tires should be rotated in such a manner as to alleviate the condition.

NOTE

There is no restriction on criss-cross rotation.

16. SPECIFICATIONS

STEEL WHEELS

Wheel size..... 9.0" X 22.5"

Tire size.....315/80 R 22.5

ALUMINUM WHEELS

Wheel size..... 9" X 22.5"

Tire size.....315/80 R 22.5

OPTIONAL FRONT & TAG AXLE ALUMINUM WHEELS (Standard on VIP vehicles)

Wheel size..... 10.5" X 22.5"

Tire size.....365/70 R 22.5

OPTIONAL WIDE BASE TIRE ALUMINUM WHEELS

Wheel size..... 14" X 22.5"

Tire size.....455/55 R 22.5

RECOMMENDED TIRE INFLATION PRESSURE AT MAXIMUM LOAD (cold)

NOTE
Vehicle is delivered with the specific inflation pressure certification plate according to the tire selection. For more information consult section 11 "Technical information" of the Owner's/Operator's manual under "DOT Certification Plate".

WARNING

Special tire selection may lower maximum allowable speed limit, even below posted speed limit. For maximum safety, check with tire manufacturer.

CAUTION

Bus shell vehicles should be weighed fully loaded and tires pressurized according to tire manufacturer's recommendations.

WARNING

Recommended tire inflation pressures and maximum allowable loads apply to speeds up to 65 mph (105 km/hr). Do not drive vehicle at a higher speed than 65 mph (105 km/h) or above the posted speed limit.

CONTENTS

SECTION CHANGE LOG 3

1. TORQUE TABLES 4

1.1 STEERING COLUMN 4
1.2 MISCELLANEOUS TORQUES 5

2. STEERING SYSTEM 7

2.1 FRONT I-BEAM AXLE STEERING SYSTEM DESCRIPTION 7
2.2 INDEPENDENT FRONT SUSPENSION STEERING SYSTEM DESCRIPTION 8

3. POWER STEERING GEAR 9

3.1 DESCRIPTION 9
3.2 POWER STEERING GEAR REMOVAL 10
3.3 POWER STEERING GEAR INSTALLATION 10
3.4 TROUBLESHOOTING 10

4. BLEEDING POWER STEERING HYDRAULIC SYSTEM 10

5. HYDRAULIC PRESSURE TEST 10

6. POWER STEERING HYDRAULIC PUMP 10

6.1 DESCRIPTION 10
6.2 REMOVAL AND INSTALLATION 10

7. STEERING COLUMN 12

7.1 REMOVAL 12

8. STEERING WHEEL 13

8.1 REMOVAL 13
8.2 INSTALLATION 14
8.3 CLOCKSPRING REPLACEMENT 14

9. TURNING ANGLE ADJUSTMENT 14

10. STEERING LINKAGE ADJUSTMENT 15

10.1 COACHES 15
10.2 VIP & BUS SHELLS 15

11. PITMAN ARM 15

11.1 REMOVAL 15
11.2 INSTALLATION 16
11.3 ADJUSTMENT 17
11.4 TAG AXLE UNLOADING SWITCH ADJUSTMENT (OPTIONAL) 17

12. DRAG LINK (I-BEAM AXLE) 17

12.1 FINE ADJUSTMENT 18
12.1.1 Adjustment System Thread Lengths 18

13. MAINTENANCE 19

13.1 POWER STEERING FLUID CONDITION 19
13.1.1 Power Steering Fluid Visual Inspection 19
13.2 POWER STEERING FLUID CHANGE 20
13.3 POWER STEERING FLUID LEVEL CHECK 20
13.3.1 Filter Element Replacement 21
13.4 STEERING SYSTEM PLAY INSPECTION 21
13.5 STEERING STABILIZER CYLINDER (DAMPER) 21
13.6 DRAG LINK MAINTENANCE 22
13.6.1 IFS Drag Link 22
Lubrication Fittings 22
13.6.2 Front I-beam Axle Drag Link 23
13.7 TIE RODS 24
13.8 DRAG LINK AND TIE ROD BALL JOINTS INSPECTION FOR CORROSION 24
13.9 DROP TYPE BALL JOINT 25
13.9.1 Drop Type Ball Joint End Play 25
13.9.2 Dismantling Drop Type Ball Joint 25
13.9.3 Assembling Drop Type Ball Joint 25
13.10 STRAIGHT BODY TYPE BALL JOINT 26
13.10.1 Visual Inspection 26
13.10.2 Straight Body Type Ball Joint End Play and Looseness 27

14. DRIVING TIPS 27

15. FRONT WHEEL ALIGNMENT 27

15.1 INDEPENDENT FRONT SUSPENSION ALIGNMENT 27
15.1.1 Alignment Terminology 28
15.1.2 Front End Inspection 28
15.1.3 Front Wheel Camber 28
15.1.4 Front Wheel Toe-In 29
15.1.5 Front Wheel Caster 29
15.1.6 Major Damage 29
15.1.7 Alignment Specifications 30
15.2 I-BEAM AXLE - FRONT WHEEL ALIGNMENT 33
15.2.1 Inspection Before Alignment 33
15.2.2 Minor Front Wheel Alignment 33
15.2.3 Major Front Wheel Alignment 33
15.2.4 Turning Angle Adjustment 34
15.2.5 R.H. Turn Adjustment 34
15.2.6 L.H. Turn Adjustment 34
15.2.7 Hydraulic Stop 34
15.2.8 Front Wheel Camber 34
15.2.9 Camber Check 35
15.2.10 Front Axle Caster 35
15.2.11 Front Wheel Toe-In 36
15.2.12 Inspection and Adjustment 36

16. TROUBLESHOOTING 37

17. TORQUE SPECIFICATIONS 38

18. SPECIFICATIONS 38

SECTION CHANGE LOG

	DESCRIPTION	DATE
1	New paragraphs added: 13.1 Power Steering Fluis Condition; 13.1.1 Power Steering Fluid Visual Inspection	Nov. 2017
2		
3		
4		
5		
6		

1. TORQUE TABLES

1.1 STEERING COLUMN

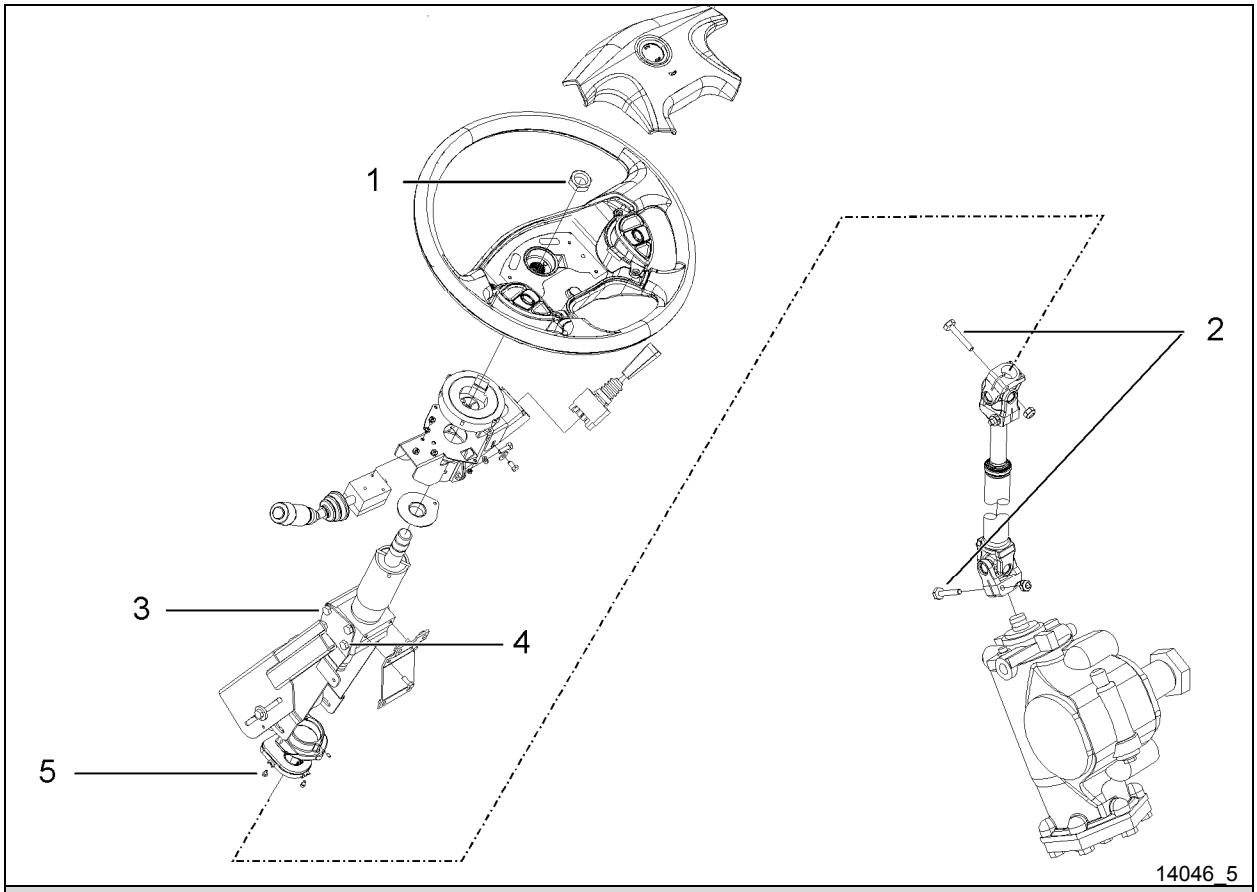

STEERING COLUMN		
No	DESCRIPTION	TORQUE
1	Steering Wheel Nut	35-45 lb-ft (47-61 Nm)
2	U-Joint Clamp Nut	48 lb-ft (65 Nm)
3	Column Support Fore Bolts	11-13 lb-ft (15-18 Nm)
4	Column Support Aft Bolts	15-19 lb-ft (20-26 Nm)
5	Steering Angle Sensor Mounting Screws	9-12 lb-in (1.02-1.36 Nm)

1.2 MISCELLANEOUS TORQUES

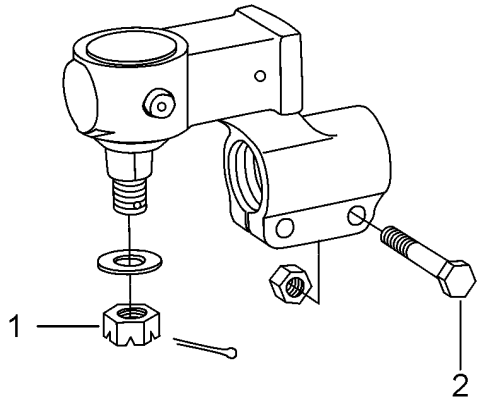

10029_1

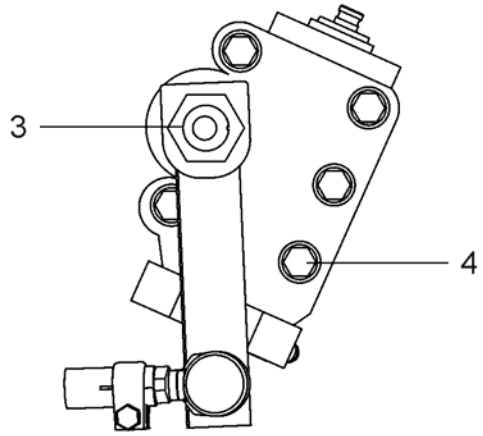

14088_2

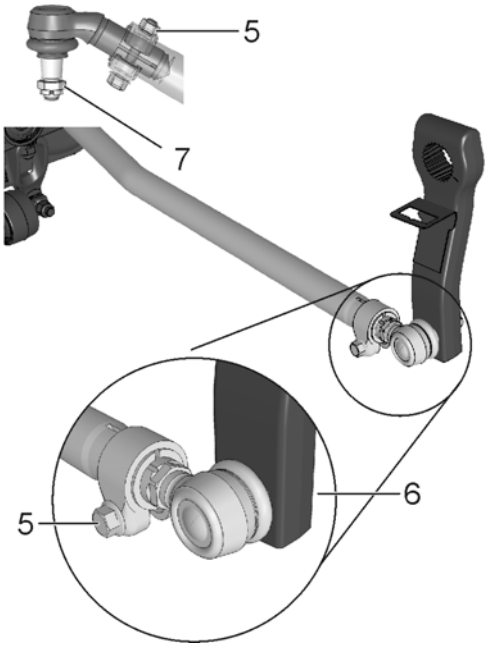

14085

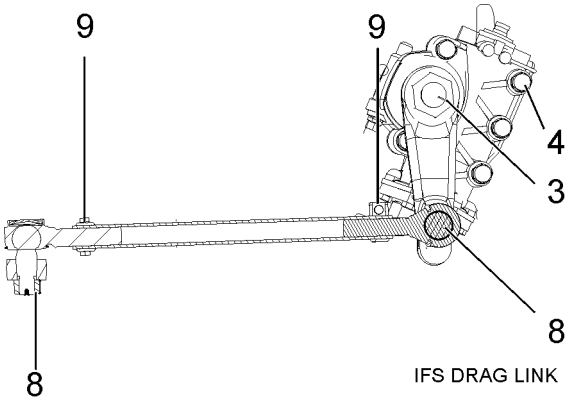

MISCELLANEOUS		
No	DESCRIPTION	TORQUE
1	Drop Type Ball Joint Castellated Nut - I-Beam Axle	175-200 lb-ft (237-271 Nm)
2	Drop Type Ball Joint Clamp Bolts - I-Beam Axle	65-75 lb-ft (88-102 Nm)
3	Pitman Arm Fixing Nut	470-570 lb-ft (637-773 Nm)
4	Steering Gear Mounting Bolts	365-405 lb-ft (495-549 Nm)
5	Drag Link Clamp Bolts - I-Beam Axle	118-133 lb-ft (160-180 Nm)
6	Drag Link Ball Joint Stud Nut (Fore) - I-Beam	165-236 lb-ft (224-320 Nm)
7	Drag Link Ball Joint Stud Nut (Aft) - I-Beam	140-200 lb-ft (190-271 Nm)

8	Drag Link Ball Joint Stud Nut - IFS	245-270 lb-ft (332-366 Nm)
9	Draglink Clamp Bolt - IFS	50-60 lb-ft (68-81 Nm)

2. STEERING SYSTEM

2.1 FRONT I-BEAM AXLE STEERING SYSTEM DESCRIPTION

The steering system consists of the steering wheel and column assembly, a vane-type hydraulic pump, reservoir, filter, interconnecting system lines and hoses, integral power steering gear, linkage and steering damper (Figure 1). The steering linkage includes the pitman arm, drag link, steering arm, tie rod arms and tie rod.

Hydraulic components are added to transmit, increase and regulate steering control forces.

These elements are:

1. Steering stabilizer (damper);
2. A vane type hydraulic pump;
3. Hydraulic reservoir and hoses.

The steering stabilizer reduces road shocks and vibrations in the system. The steering gearbox is self-powered and provides movement with power assistance to the left wheel.

Steering stability and tire wear are influenced by wheels, hubs, tires, air suspension, brakes, front suspension and front end alignment which are all covered in their respective sections in this manual.

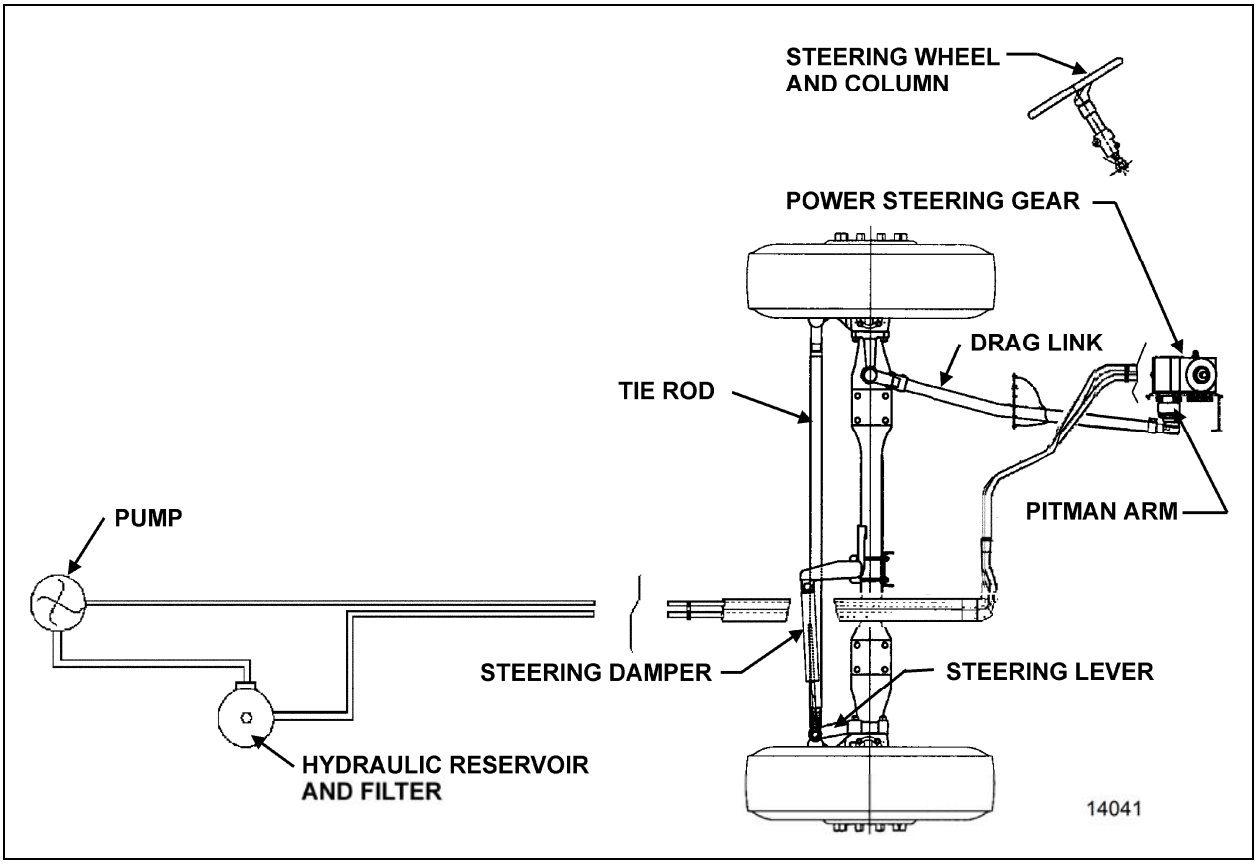

FIGURE 1: I-BEAM AXLE STEERING SYSTEM SETUP 14041

2.2 INDEPENDENT FRONT SUSPENSION STEERING SYSTEM DESCRIPTION

The steering system consists of the steering wheel and column assembly, a vane-type hydraulic pump, reservoir, filter, interconnecting system lines and hoses, integral power steering gear and linkage (Figure 2). The steering linkage consists of tie rods connected to the bell crank and the steering arm at the left side of the coach, and to the idler arm and steering arm at the right side of the coach. The bell crank and idler arm are connected by a relay rod. A drag link connected to the bell crank and the pitman arm, which is mounted to the steering gear, transfers the turning motion of the steering wheel to the steering arms.

Hydraulic components are added to transmit, increase and regulate steering control forces.

These elements are:

1. A vane type hydraulic pump;
2. Hydraulic reservoir and hoses.
3. Hydraulic power cylinder (VIP & Bus Shells).

NOTE
VIP vehicles and Bus Shells are also equipped with a hydraulic power cylinder. The hydraulic power cylinder provides an added source of assistance and being connected to the R.H. wheel, makes it such that the total steering forces are produced with minimal stress on mechanical linkages.

The steering gearbox is self-powered and provides movement with power assistance to the left wheel.

Steering stability and tire wear are influenced by wheels, hubs, tires, air suspension, brakes, front suspension and front end alignment which are all covered in their respective sections in this manual.

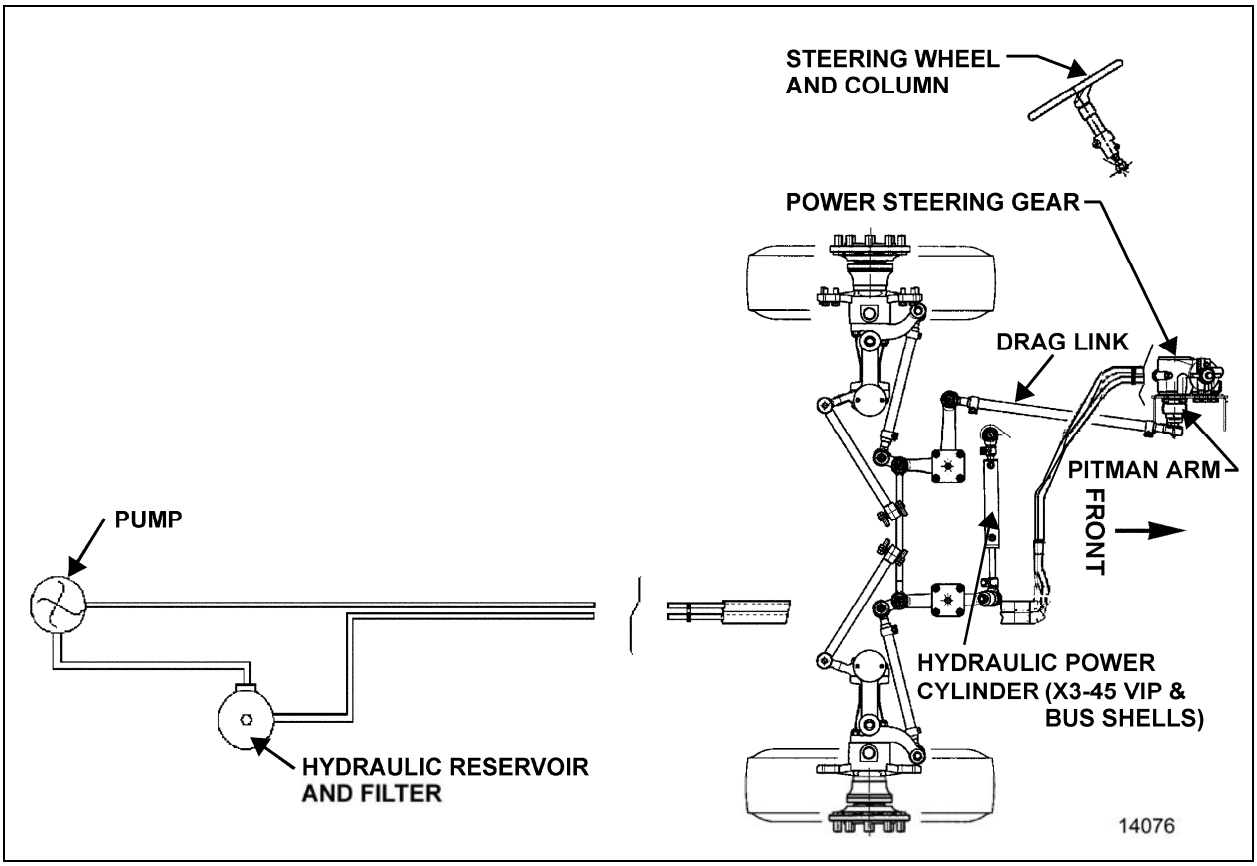

FIGURE 2: IFS STEERING SYSTEM SETUP 14076

3. POWER STEERING GEAR

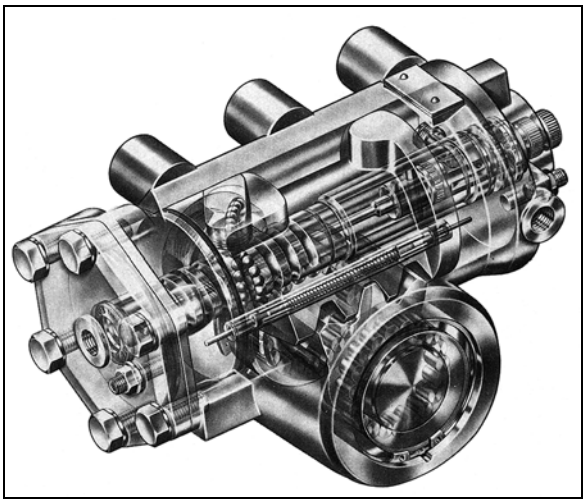

FIGURE 3: POWER STEERING GEAR 14035

3.1 DESCRIPTION

The power steering gear is located in the lower part of front service compartment (Figs. 3 & 4). The housing of the ZF-Servocom contains a control valve, working cylinder and a complete mechanical steering gear. The pressure oil for the steering is delivered by a motor-driven oil pump which is supplied with oil from an oil tank.

The housing is designed as a cylinder for the piston, which converts the rotation of the steering shaft and the worm into an axial movement and transfers this to the steering worm sector shaft. The serration of the sector shaft is straight-cut with a high surface quality in such a way that it is only possible to set a unique setting without play on installation in the straight-ahead driving area by means of the two eccentrically designed lateral housing covers.

The piston and worm are connected via a ball chain. When the worm is turned, the balls are collected by a circulating pipe at one end of the chain and fed in again at the other end, thus producing an endless ball chain.

The control valve consists of the valve slide in a needle bearing in the worm, with six control grooves on the circumference and the control sleeve on the worm, which also has six control grooves. The valve slide, designed with steering shaft connection, turns together with the worm as the steering wheel is turned.

FIGURE 4: FRONT SERVICE COMPARTMENT
18611

A torsion bar, which is pinned with the valve slide and the worm, keeps the control valve in the neutral position as long as no opposing force is applied to the steering wheel. The steering housing contains a pressure relief valve, which limits the discharge pressure of the oil pump to the maximum value required. A replenishing valve can also be used, through which oil is sucked from the return if steering is not hydraulically boosted.

Compared with constant ratio, steering versions with variable ratio are more directly designed in the center area than outside the center area. The resulting smaller steering corrections benefit steering behavior in straight-ahead driving. At the same time, the indirect transmission means that there is a higher hydraulic torque available at the steering arm in parking movement. If the hydraulic assistance fails, the operating forces on the steering wheel are correspondingly lower in this area. This is achieved through a piston/steering worm sector shaft serration with differing modulus and angle of pressure.

Upon transfer of a torque from the steering shaft to the worm, or vice versa, the torsion bar is deformed in the elastic area so that there is torsion between the valve slide and the control sleeve. When the steering wheel is released, the torsion bar ensures that the valve is returned to the neutral position.

Refer to the *"ZF-SERVOCOM Repair Manual"* and "*ZF-SERVOCOM Design, Operation, Maintenance, Inspection"*, found on your Technical Publications USB flash drive, for

the functional aspects and maintenance procedure of the steering gear.

3.2 POWER STEERING GEAR REMOVAL

WARNING

The steering gearbox weighs approximately 100 lbs (45 kg) dry. Exercise caution when handling.

1. Put a container into place, and then disconnect both the inlet and outlet hoses from the power steering gear. Cover fittings to prevent fluid contamination.
2. Mark both the pitman arm and sector shaft with a line, then remove pitman arm. Refer to *"11.1 Pitman Arm Removal"* procedure.
3. Mark both the steering shaft universal joint yoke and steering gear input shaft with a line, then disconnect universal joint.
4. Unscrew and remove the power steering gear.

3.3 POWER STEERING GEAR INSTALLATION

Reverse *"Power Steering Gear Removal"* procedure paying particular attention to the following:

1. Tighten fasteners as recommended according to torque tables.
2. Bleed air from the system as per paragraph 4 (Bleeding power steering hydraulic system).

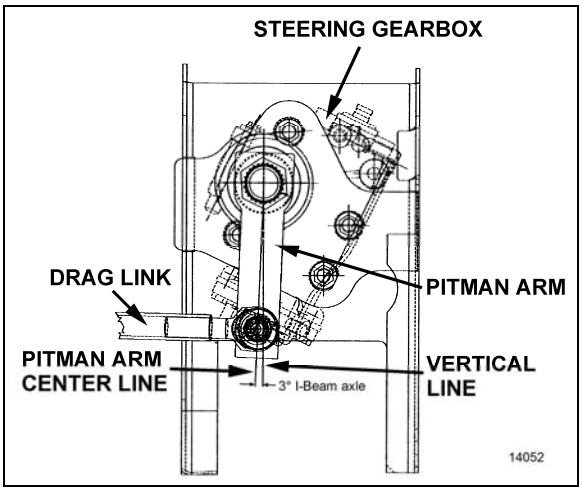

FIGURE 5: PITMAN ARM ADJUSTMENT

3.4 TROUBLESHOOTING

Perform troubleshooting of the steering gear as outlined in the *"ZF-SERVOCOM Repair Manual"* and *"ZF-SERVOCOM Design, Operation, Maintenance, Inspection"* found on your Technical Publications USB flash drive.

4. BLEEDING POWER STEERING HYDRAULIC SYSTEM

To bleed the power steering hydraulic system, refer to *"ZF-SERVOCOM Design, Operation, Maintenance, Inspection"*, found on your Technical Publications USB flash drive, under heading *"Setting and Functional Test"*.

5. HYDRAULIC PRESSURE TEST

Perform a pressure test as outlined in the *"ZF-SERVOCOM Repair Manual"* annexed to this section under heading *"Setting and Functional Test"*.

NOTE

For vehicles equipped with ZF-SERVOCOMTRONIC (speed sensitive) unit, refer to the supplement to the repair manual ZF-SERVOCOM.

6. POWER STEERING HYDRAULIC PUMP

6.1 DESCRIPTION

The power steering pump is a gear driven hydraulic unit which supplies hydraulic pressure for the operation of the steering gear. The pump is mounted on the engine, at the flywheel end and is also used for driving the fuel pump.

6.2 REMOVAL AND INSTALLATION

The pump is accessible through the engine compartment R.H. access door.

To remove the pump, proceed as follows:

1. You must first remove the fuel feed pump.

2. Clean around the fuel pump and fuel lines. Position a container to catch any fuel that might drain from the pump or lines.
3. Remove the fuel pump.

NOTE
Only unfasten the bolts marked with arrows.

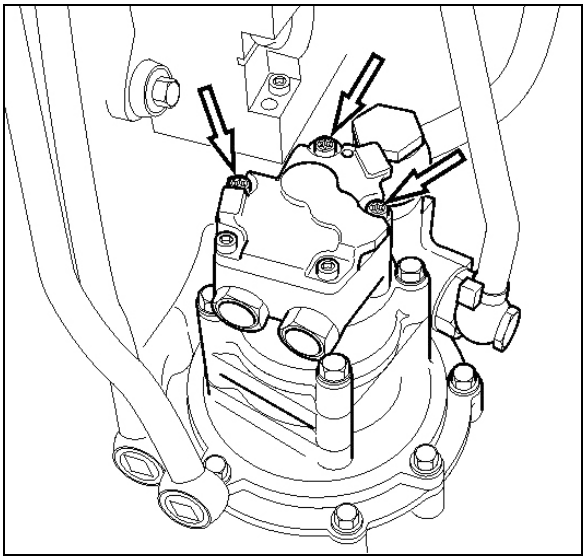

FIGURE 6: FUEL PUMP REMOVAL

CAUTION
Ensure to clean around the head of the bolts. Debris will prevent the tool from fitting properly and cause damage to the fasteners.

4. Check that the adapter and fuel pump drive axle are not damaged.

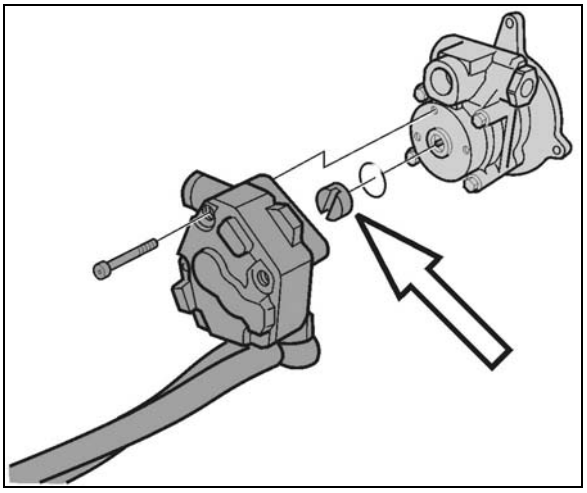

FIGURE 7: FUEL PUMP DRIVE AXLE

5. Set the fuel pump aside.
6. Clean around the power steering pump and loosen the steering lines. Position a container to catch any hydraulic fluid that might drain from the pump or lines.
7. Unfasten the power steering pump bolts.

NOTE
Only unfasten the bolts marked with arrows.

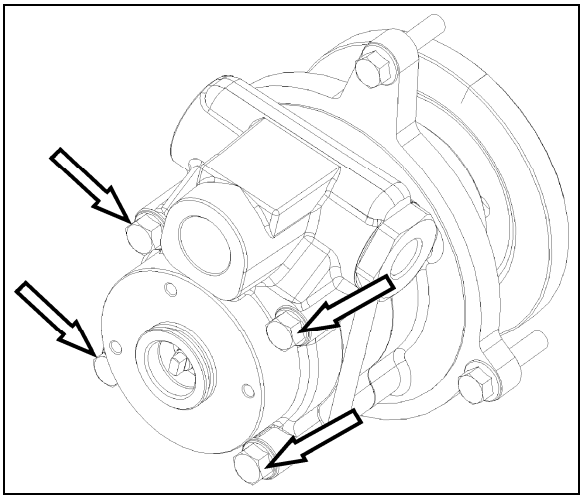

FIGURE 8: POWER STEERING PUMP REMOVAL

8. Install the new power steering pump. Torque-tighten bolts to specification.

NOTE
Use a new gasket.

9. Connect the hydraulic lines to the power steering pump.
10. Install the fuel pump. Torque-tighten bolts to specification.

NOTE
Use a new sealing ring. Check that the fuel pump drive axle sits correctly in the power steering pump.

11. Start the engine and let run for 5 minutes. Make sure that there are no leaks.

7. STEERING COLUMN

7.1 REMOVAL

To disassemble the steering column from system, refer to Figure 9 & Figure 10. The steering column has no lubrication points. The lower steering column U-joint is easily accessible through the front service compartment. The upper steering column U-joint and the steering slip joint are accessible from the front driver's area. To access these joints, proceed as follows:

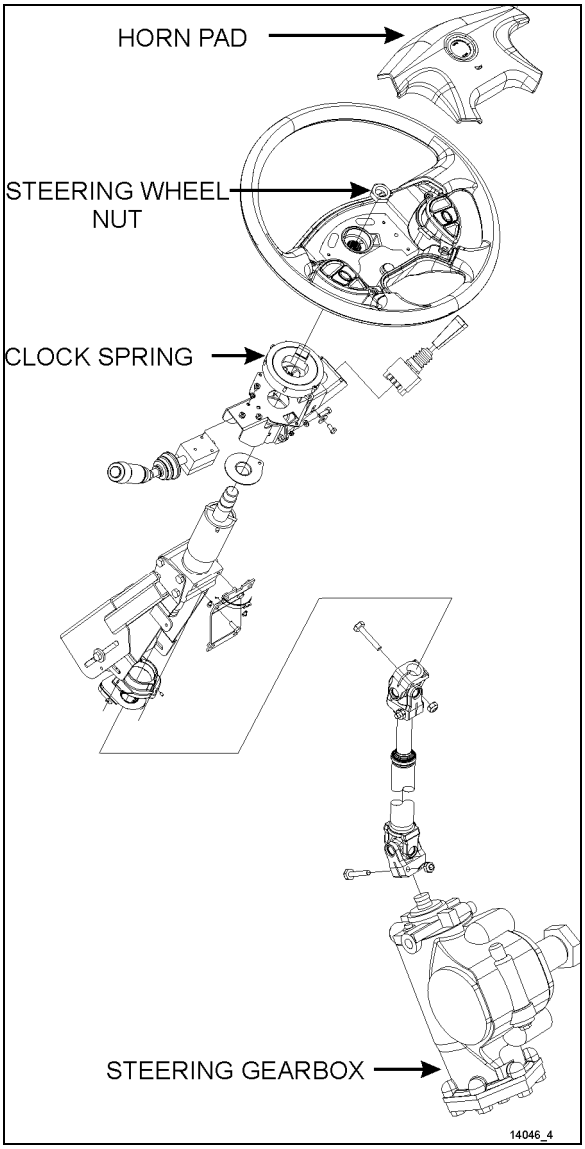

FIGURE 9: STEERING COLUMN

1. From the front driver's compartment area, remove the three plastic fasteners on steering column lower cover. Remove the lower cover (Figure 10).
2. Unscrew the four retaining screws on steering column middle cover.
3. Unscrew the four retaining screws fixing steering column upper cover to middle cover. Remove the steering column middle and upper covers.
4. Position the steering wheel in order to gain access to the joints.

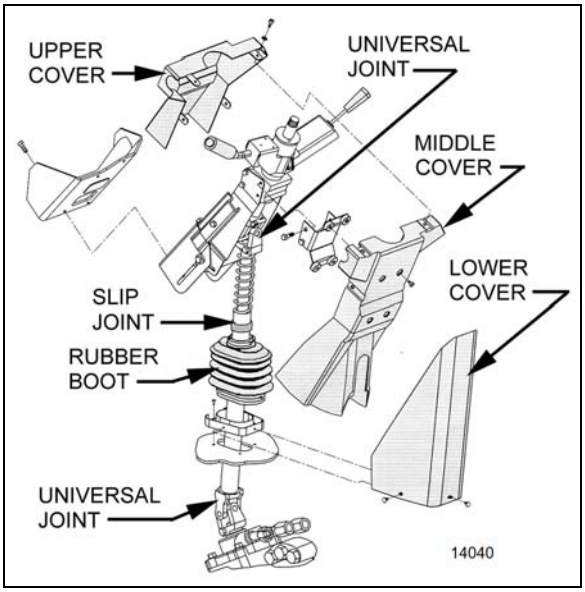

FIGURE 10: STEERING COLUMN COVERS

8. STEERING WHEEL

8.1 REMOVAL

NOTE
Before undertaking the steering wheel removal, assure that the front wheels are pointing straight ahead, aligned with the vehicle.

1. Set the battery master switch located in the rear electrical compartment to the *"OFF"* position.
2. Pull the horn pad straight up gently to detach it from the steering wheel (Figure 11).
3. Disconnect the horn wire (white) connected to the horn pad and the steering wheel harness 4-pin connector.

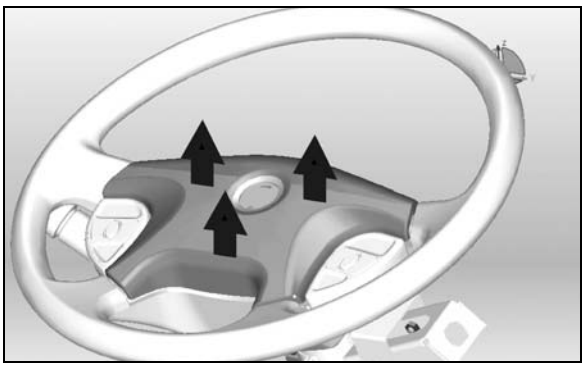

FIGURE 11: REMOVING THE HORN PAD

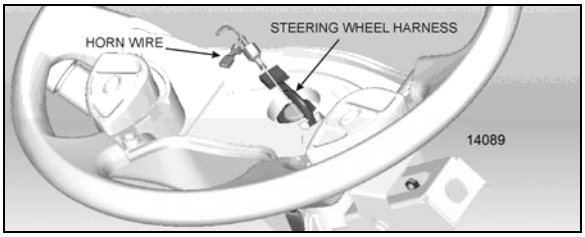

FIGURE 12: STEERING HARNESS & HORN WIRE

4. Unscrew the steering wheel nut. To simplify installation and ensure steering wheel alignment, mark the relationship of the spline shaft to the steering wheel hub (if marks don't already exist or don't line up).
5. Using an appropriate puller, separate the steering wheel from the spline shaft.
6. From behind the steering wheel, pull gently on the electrical wires passing through the rectangular opening in the steering wheel to finish removal of the steering wheel.
7. Once the steering wheel is removed, it is important to block any rotating movement of the clockspring in order to prevent it from losing its neutral position. Use two pieces of masking tape to lock it in place (Figure 13).

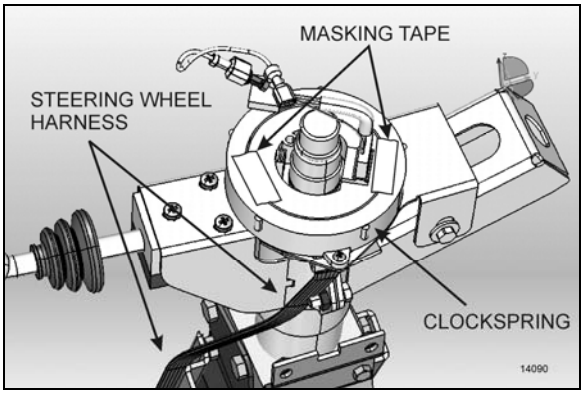

FIGURE 13: LOCKING THE CLOCKSPRING IN PLACE

NOTE
The clockspring mechanism permits a certain number of turns in each direction. At the moment of reinstalling the steering wheel, if the clockspring is not at its neutral position, the number of available turns will be reduced. This may damage the clockspring if the steering wheel is turned to its maximum amplitude.

8.2 INSTALLATION

1. Route the white horn wire and the 4-pin connector through the opening on the steering wheel.
2. Align the mark on the steering wheel hub with the mark on the spline shaft and slide the wheel onto the shaft.
3. Tighten steering wheel retaining nut.

TORQUE : 35-45 lb-ft (47-61 Nm)

4. Plug the 4-pin connector and connect the white horn wire to the center pad.
5. Reinstall the center pad and test for proper horn functioning.

8.3 CLOCKSPRING REPLACEMENT

1. Remove the steering wheel.
2. Remove the 2 clockspring mounting screws and then remove the clockspring. You will have to disconnect the clockspring harness connector located lower along the steering wheel column (Figure 14). If necessary, remove the steering column covers.
3. Route the new clockspring harness through the opening in the clockspring support (Figure 14). Plug the connector at the base of the steering wheel column and fix harness along the steering wheel column.

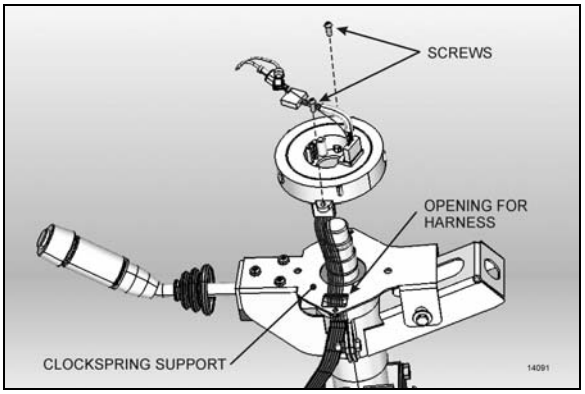

FIGURE 14: CLOCKSPRING INSTALLATION

4. Mount the clockspring in place with 2 screws.
5. Break the paper seal and rotate the center part of the clockspring about 50° clockwise (Figure 15). This step is necessary for the installation of the steering wheel.

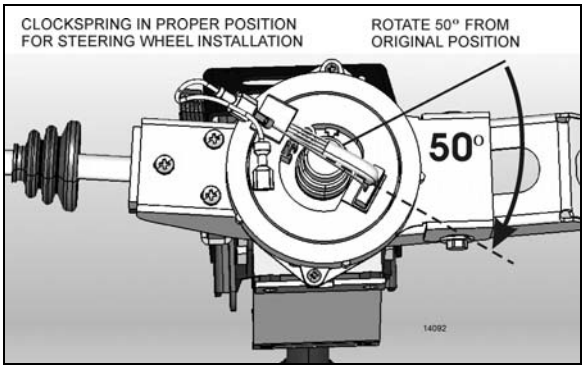

FIGURE 15: PROPER CLOCKSPRING POSITION

6. Reinstall the steering wheel.

9. TURNING ANGLE ADJUSTMENT

The maximum turning angle is set through two (2) steering stop screws installed on the knuckles, above the ABS wheel sensors. Steering stop screws are factory adjusted to accommodate the chassis design, and therefore, do not require adjustment on new vehicles. However, these should be checked and adjusted if necessary, any time a steering system component is repaired, disassembled or adjusted. Refer to section 10 *"Front Axle"* under heading *"6.4 "Turning Angle Adjusment".*

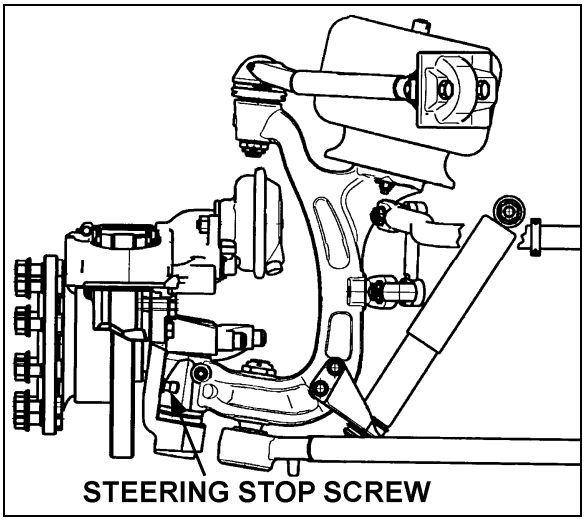

FIGURE 16: STEERING STOP SCREW ON IFS

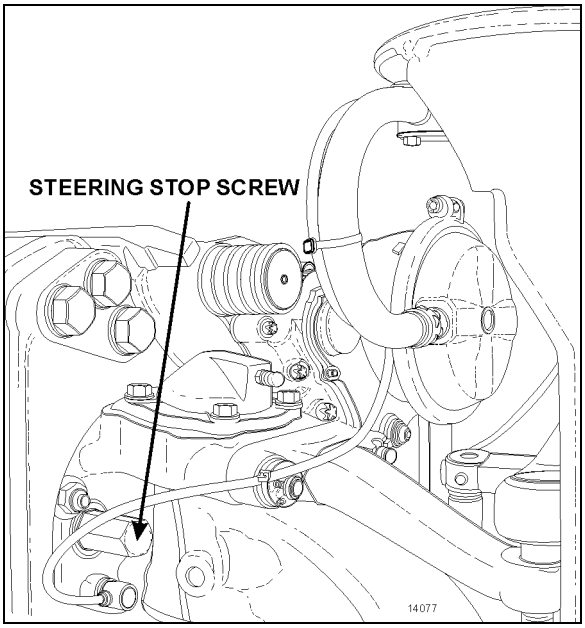

FIGURE 17: STEERING STOP SCREW ON I-BEAM AXLE

CAUTION

To prevent the steering damper from interfering with the adjustment of turning angles on vehicles equipped with I-Beam axle, make sure its fixing bracket is at correct location on the axle (refer to paragraph 13.5 "Steering Stabilizer Cylinder (Damper)).

CAUTION

Never maintain the relief pressure for more than 5 seconds, since damage to the power steering pump may occur.

CAUTION

Reduce or shut off the power steering hydraulic pressure before the boss on the knuckle touches the stop screw. If not, the components of the front axle will be damaged (refer to "ZF-SERVOCOM Repair Manual" and "ZF-SERVOCOM Design, Operation, Maintenance, Inspection", found on your Technical Publications USB flash drive, under heading "Setting The Steering Limiter").

10. STEERING LINKAGE ADJUSTMENT

Steering linkage pivot points should be checked each time they are lubricated. Looseness can be visually detected while rotating the steering wheel in both directions. Replace defective parts.

10.1 COACHES

The steering linkage includes the pitman arm, drag link, steering arm, tie rod arms and tie rod.

CAUTION

Front wheel alignment should be checked and adjusted if necessary, any time a component of the steering system is repaired, disassembled or adjusted. Refer to section 10 "Front Axle" *under heading* 6. "Front Wheel Alignment".

10.2 VIP & BUS SHELLS

The steering linkage consists of tie rods connected to the bell crank and the steering arm at the left side of the bus shell, and to the idler arm and steering arm at the right side of the bus shell.

CAUTION

Front wheel alignment should be checked and adjusted if necessary, any time a component of the steering system is repaired, disassembled or adjusted. Refer to section 16 "Suspension" under heading: "Front End Alignment".

11. PITMAN ARM

11.1 REMOVAL

1. Remove cotter pin, nut and washers from drag link ball stud at pitman arm.
2. Disconnect drag link from pitman arm, using jaw style pullers (pressure screw type).

WARNING

Always wear approved eye protection when operating pullers.

CAUTION

Do not drive (hammer in) pitman arm on or off pitman shaft as this can damage the steering gear.

CAUTION

Heating of components to aid in disassembly is not allowed because it has a detrimental effect on axle components and steering linkages.

3. Using a cold chisel, undo punch mark that locks fixing nut to the pitman arm.
4. Remove pitman arm fixing nut.
5. Check the radial position of the pitman arm in relation to the sector shaft prior to removal of pitman arm.

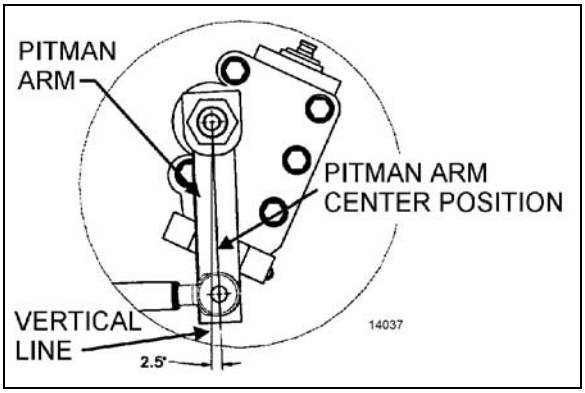

FIGURE 18: I-BEAM FRONT AXLE PITMAN ARM ADJUSTMENT

6. Add reference marks to the arm and shaft if necessary to ensure correct alignment at reassembly.

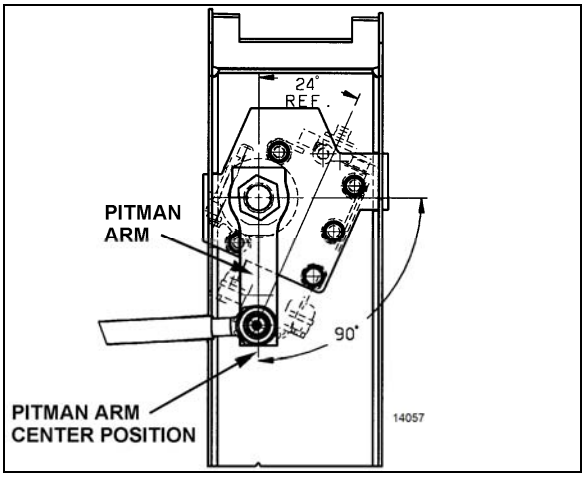

FIGURE 19: IFS PITMAN ARM ADJUSTMENT

7. Use a suitable puller and remove pitman arm.

11.2 INSTALLATION

1. Position pitman arm on sector gear shaft with reference marks aligned.
2. Install fixing nut.

TORQUE: 470-570 lb-ft (637-773 Nm)

NOTE

Use a new nut if the previously removed nut was punched.

3. Lock nut with sector shaft using a punch mark into the groove (Refer to Figure 20).

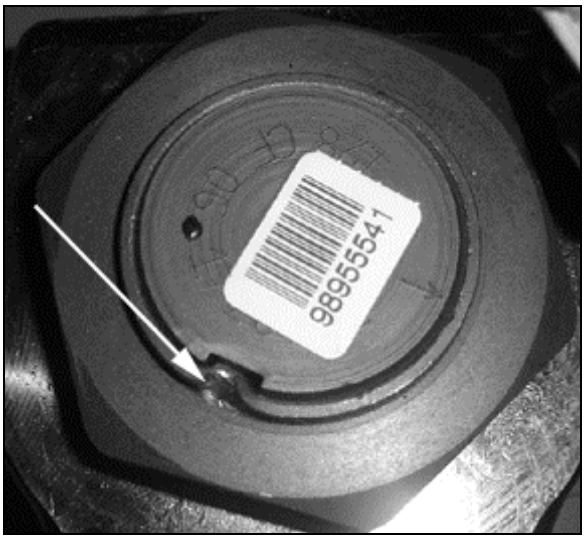

FIGURE 20: FIXING NUT PUNCH MARK 16098

4. Connect drag link to pitman arm while ensuring that rubber stabilizer is in place on

the rod end. Install washers. Tighten nut and install a new cotter pin. Depending on axle type, select the appropriate torque,

IFS, **TORQUE: 245-270 lb-ft (332-366 Nm)**

I-BEAM, **TORQUE: 165-236 lb-ft (224-320 Nm)**

CAUTION

Input shaft marks must be aligned before adjusting pitman arm.

11.3 ADJUSTMENT

1. Disconnect the drag link from pitman arm. Center steering wheel by dividing the total number of steering wheel turns in two. Scribe a reference mark on steering gearbox at the center previously determined.
2. Using a protractor, check the angle of the pitman arm (refer to Figure 18 & Figure 19 for details).
3. The pitman arm should be adjusted with reference marks aligned or to an angle of 2.5º towards front of vehicle (I-Beam axle) or 0° (Independent Front Suspension) in relation with the vertical axis. If not, unscrew and remove fixing nut. Remove the pitman arm according to the procedure outlined under previous heading *"Pitman arm removal"*. Adjust to the proper angle.
4. When adjustment is achieved, replace fixing nut and tighten

TORQUE: 470-570 lb-ft (637-773 Nm)

11.4 TAG AXLE UNLOADING SWITCH ADJUSTMENT (OPTIONAL)

1. Make sure vehicle wheels are straight and facing forward.
2. Line up switch lever with reference to the bracket center (Refer to Figure 21).

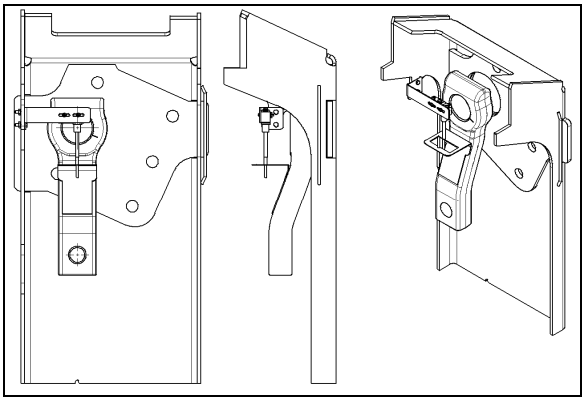

FIGURE 21: TAG AXLE UNLOADING SWITCH ADJUSTMENT 14061

12. DRAG LINK (I-BEAM AXLE)

The draglink on your vehicle connects the steering gear pitman arm to the front axle's steering arm.

For additional details please refer to ZF assembly instructions LMN404-3 *and* Lemförder service information leaflet for the fine adjustment system.

PINCH HAZARD

Keep hands and fingers clear of pinch zones around pitman arm.

Pinch zones are between pitman arm and clamp, and between front of pitman arm and vehicle structure.

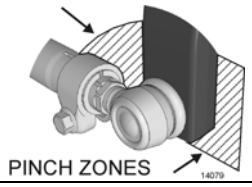

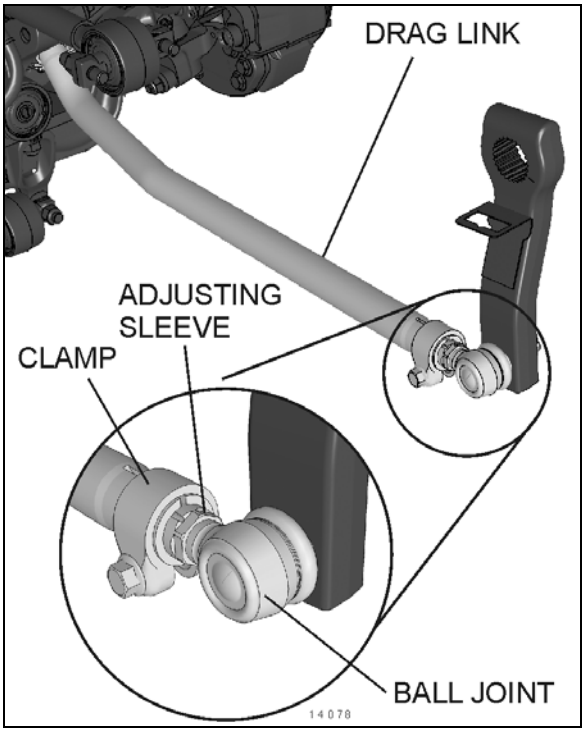

FIGURE 22: DRAG LINK

12.1 FINE ADJUSTMENT

The drag link fore end is provided with an adjusting sleeve which has internal and external left and right threads. Turning this sleeve allows fine adjustments to the length of the draglink.

Apply a small amount anti-seize compound on the threads for corrosion protection. Be sure to avoid smearing the ball joint boot.

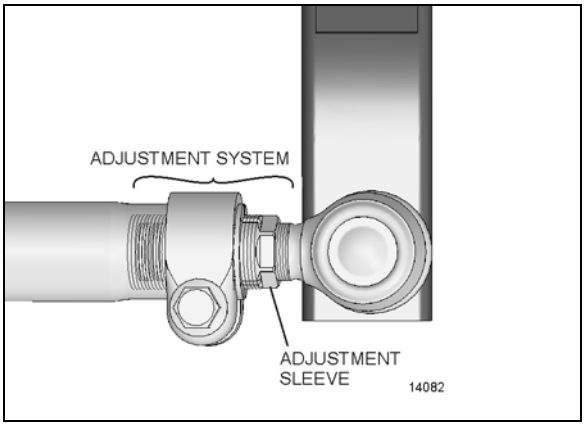

FIGURE 23: DRAG LINK ADJUSTMENT SYSTEM

CAUTION

Too little pressure on the clamp can destroy the threaded adjustment system sleeve.

Apply the recommended torque for clamp nut.

TORQUE: 118-133 lb-ft (160-180 Nm)

Fine adjustment of the drag link length should be performed exclusively by turning the adjuster sleeve.

12.1.1 Adjustment System Thread Lengths

When assembling the adjuster sleeve or ball joint, be sure to assemble the parts within the following prescribed thread lengths and values.

Lengths V and W should be measured prior to removal to restore the steering system to its original state.

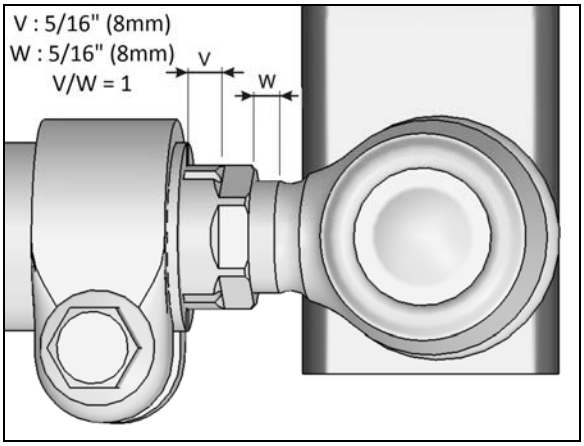

FIGURE 24: DRAG LINK ADJUSTMENT SYSTEM

- Dimension V and W should be equal: V/W = 1
- Dimension V: *5/16" (8mm)*
- Dimension W: *5/16" (8mm)*

WARNING

To preserve the integrity of the adjusting system, length V and W should *never* exceed 5/8″(16mm) ± 1 thread pitch.

Length V and W should be equal within ± 1mm

13. MAINTENANCE

The power steering system requires little maintenance. However, the system should be kept clean to ensure maximum operating performance and trouble-free service. Periodic inspections should also be made to check for leakage and all parts for damage or distortion.

When the slightest evidence of dirt, sludge or water is discovered in the system, disconnect fluid lines at the power steering gear to drain the system. Drain and refill the system with appropriate power steering fluid.

Air in the hydraulic system will cause spongy action and noisy operation. When a hose has been disconnected or when fluid has been lost for any reason, the system must be bled. Bleed system as outlined under paragraph 4*: "BLEEDING POWER STEERING HYDRAULIC SYSTEM".*

CAUTION

Do not operate the pump without fluid in the power steering fluid reservoir.

If the steering linkage between the steering gear and the two front wheels is not properly adjusted, or if it is bent, twisted or worn, the steering of the vehicle will be seriously impaired. Whenever a steering linkage part is repaired, replaced or adjusted, steering geometry and front wheel alignment must be checked and necessary corrections made. Refer to section 10 *"FRONT AXLE"* under heading 6: *"FRONT WHEEL ALIGNMENT"*.

At regular lubrication intervals, the steering linkage should be thoroughly inspected for worn or loose components.

After the vehicle has been operated continually and high mileage figures have been reached, overhaul of the various steering units will be required. General overhaul procedure normally requires removal of the entire assembly, cleaning and inspection of all parts and final assembly. Careful inspection of all parts during overhaul is very important and must not be neglected.
Lubrication fittings must all be cleaned before applying lubricant. Moreover, always be sure the equipment used in applying lubricant is clean. Every precaution should be taken to prevent entry of dirt, grit, lint or other foreign matter into lubricant containers. Replace fittings that have become broken or damaged. Lubrication intervals, as well as the recommended lubricants for the steering components, are given in the *"LUBRICATION AND SERVICING SCHEDULE"* in Section 24 of this manual. The intervals given in the schedule are recommended for normal service. More frequent intervals may be required under severe operating conditions.

13.1 POWER STEERING FLUID CONDITION

The power steering fluid reservoir is filled with Automatic Transmission Fluid (ATF) (refer to FLUIDS & LUBRICANTS TABLE in Section 24: Lubrication & Servicing). A periodic power steering fluid change is not required. Change the power steering fluid only if the steering gear unit was repaired, replaced or if the visual inspection of the fluid shows that a change is necessary.

MAINTENANCE

Check power steering fluid condition at the intervals specified by the Lubrication And Servicing Schedule in Section 24: LUBRICATION & SERVICING

13.1.1 Power Steering Fluid Visual Inspection

The color of the power steering fluid can give you an idea of the fluid's condition and tell you that it needs to be changed. ATF gets darker with age, this process doesn't necessarily indicate a problem. If the fluid has darkened significantly, it may indicate that the power steering system is running hotter than normal and the fluid is overheating. Troubleshoot the overheating and have the fluid changed.

Get a sample of power steering fluid using the gauge located on top of the reservoir. Wipe it on a clean white rag. Check the fluid color, smell and consistency. Use the color chart below to determine if the power steering fluid needs to be changed.

POWER STEERING FLUID CONDITION COLOR CHART	
	Translucent red **New fluid**
	Semi-translucent dark red/light brown, thick oily consistency, relatively odorless **Normal fluid**
	Opaque dark brown, appears to be thin **Dirty, change fluid**
	Dark brown/black with burnt smell **Bad condition** *(internal damage may have already occurred)*

13.2 POWER STEERING FLUID CHANGE

Please, refer to **Oil Change and Bleeding** in "*ZF-SERVOCOM Design, Operation, Maintenance, Inspection"* found on your Technical Publications USB flash drive.

The power steering fluid reservoir is equipped with a **magnetic drain plug**. When replacing the power steering fluid, check for trapped metal particle before refilling with new power steering fluid.

13.3 POWER STEERING FLUID LEVEL CHECK

The power steering reservoir is located on R.H. side of engine compartment, on front wall and accessible through the engine compartment R.H. side door (Figure 25).

MAINTENANCE

At regular intervals, fluid level should be checked in the reservoir and filter assembly. Furthermore, the oil filter element in the power steering reservoir should be replaced at the intervals specified by the Lubrication And Servicing Schedule in Section 24: LUBRICATION & SERVICING.

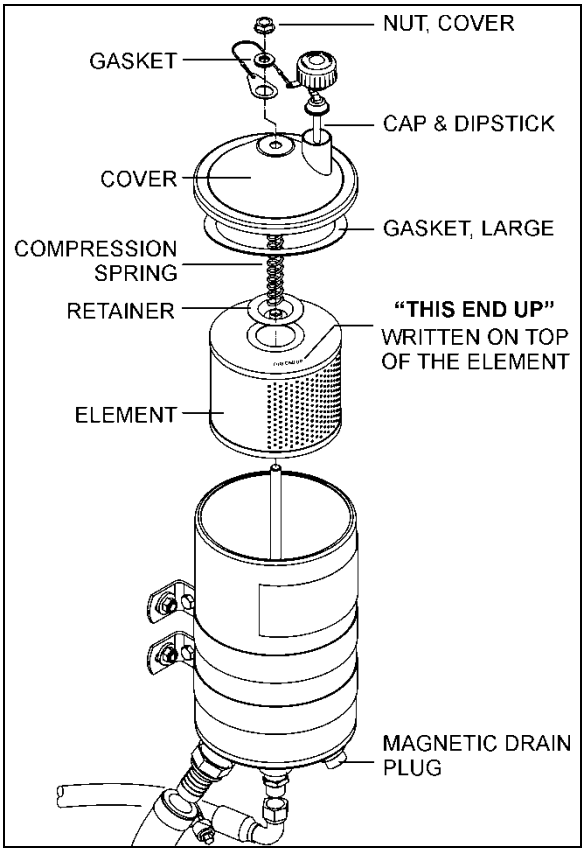

FIGURE 25: POWER STEERING FLUID RESERVOIR

1. Stop the engine.
2. Open the engine compartment R.H. side door.
3. Prior to pulling out the oil dipstick on the power steering fluid reservoir (Figure 25), thoroughly clean the reservoir and its immediate vicinity to protect the fluid from being soiled by impurities.
4. Unscrew and remove the dipstick located on top of reservoir and wipe with a clean rag.
5. Insert dipstick in reservoir. Remove it again to check fluid level.
6. Top up level to "FULL" mark using proper dipstick side depending on fluid temperature.

7. Reinsert and tighten the dipstick.

13.3.1 Filter Element Replacement

1. Before taking off the power steering fluid reservoir cover, thoroughly clean the reservoir and its immediate vicinity to prevent the ingress of impurities into the hydraulic fluid.
2. Unscrew and remove the cover nut located on top of the power steering fluid reservoir (Figure 25).
3. Remove the reservoir cover and the gasket.
4. Remove the retaining spring, the element retainer and finally the filter element.
5. Fit a new filter element.
6. Pass the reservoir threaded rod through the element and install the element with the element's writing "THIS END UP" on top.
7. Pass the reservoir threaded rod through the retainer and rest the retainer on top of the element, followed by the compression spring.
8. Clean the large gasket and the mating surfaces on the cover and reservoir.
9. Properly place the large gasket in the cover. Install the cover, making sure the gasket is properly placed.
10. Clean the small gasket and install with the rubber side against the cover. Screw and tighten the nut as necessary to prevent leaks.

13.4 STEERING SYSTEM PLAY INSPECTION

Basically, the steering system play is checked with the engine running and the front wheels in the straight ahead driving position. The steering wheel is slowly turned in one direction until there is a perceptible movement of a front wheel. If a point on the steering wheel rim moves more than the value indicated below before perceptible return movement of the wheel under observation, there is excessive free play in the steering system.

Steering wheel travel covered:

Maximum 1.732 inch (44mm) with Prevost 18-inch steering wheel

NOTE

*The full procedure is described under paragraph **1.6.7 Checking the Steering Gear Play** in ZF SERVOCOM DESIGN, OPERATION, MAINTENANCE, INSPECTION (8090) manual.*

Take note that the maximum travel covered value specified in ZF's manual doesn't apply to the Prevost design which uses a 18-inch steering wheel.

If the maximum value is exceeded, the steering system should be thoroughly inspected for worn or loose components, beginning with the steering linkage. If the steering linkage is in good condition, then the steering column and the steering gear should be inspected.

MAINTENANCE

I-BEAM FRONT AXLE

Perform the steering play inspection every 185 000 miles (300 000 km) or once a year whichever comes first.

MAINTENANCE

INDEPENDENT FRONT SUSPENSION (Private use only)

Perform the steering play inspection every 48 months.

13.5 STEERING STABILIZER CYLINDER (DAMPER)

The steering damper is located on R.H. side, aft of front axle (Figure 26).

The cylinder is non-adjustable and non-repairable. Check for oil leaks or lack of resistance. Disconnect the cylinder from axle, and then carefully attempt to extend and collapse it manually.

MAINTENANCE

Steering damper ball joint (rod end) is provided with grease fitting for pressure lubrication. Under normal conditions, it should be serviced at the intervals specified by the Lubrication And Servicing Schedule in Section 24: LUBRICATION & SERVICING.

Check the ball joint for wear, and replace if necessary. Good quality lithium-base grease NLGI No. 2 like Shell Retinax LX is recommended.

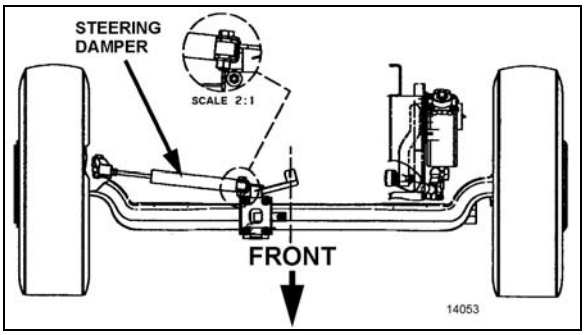

FIGURE 26: STEERING STABILIZER (DAMPER)

13.6 DRAG LINK MAINTENANCE

Visually inspect drag link components for broken, corroded or deformed clamps, loose, bent or corroded nuts and gauges on tube from rubbing parts.

13.6.1 IFS Drag Link

Lubrication Fittings

All lubrication fittings must be clean before applying lubricant. Also, always be sure equipment used in applying lubricant is clean. Every precaution should be taken to prevent entry of dirt, grit, lint or other foreign matter into lubricant containers. Replace fitting when become broken or damaged.

Re-charge ball joint until grease can be seen escaping from socket. On ball joints fitted with a rubber boot, do not add to much grease as the rubber boot might expand and rupture.

In selecting proper lubricants, supplier reputation must be considered. The supplier must be responsible for product quality. Figure 27 shows approximate location of steering lubrication fittings.

MAINTENANCE

Drag Link (with Independent Front Suspension)

Drag link ends (ball joint) are provided with grease fittings for pressure lubrication.

To prevent corrosion from forming around the ball pin (particularly the drop type ball joint as it is exposed to dirt and water), remove the old grease bead and assure sufficient grease is applied to purge the old grease and fill the joint and dust seal.

MAINTENANCE

Intervals below are recommended for normal service. More frequent intervals may be applied under severe operating conditions.

The lubrication fittings (see **Erreur ! Source du renvoi introuvable.**) should be serviced at the intervals specified by the Lubrication And Servicing Schedule in Section 24: LUBRICATION & SERVICING.

(1) **Drag Link Ends:** Lubricate at four fittings, two at each end of link with good quality lithium-base grease NLGI No. 2 (Shell Retinax LX or equivalent).

(2) **Relay Rod Ends:** Lubricate at two fittings, one at each end of rod with good quality lithium-base grease NLGI No. 2 (Shell Retinax LX or equivalent).

(3) **Tie Rod Ends:** Lubricate at four fittings, one at each end of both tie rods, with good quality lithium-base grease NLGI No. 2 (Shell Retinax LX or equivalent).

(4) **Steering Knuckle (swivel assembly):** Refer to DANA SPICER MAINTENANCE MANUAL NDS AXLES Lubrication and Maintenance" for more details.

(5) **Idler Arm and Bell Crank:** Lubricate at two fittings, one on the idler arm and the other on the crank bell, with good quality lithium-base grease NLGI No. 2 (Shell Retinax LX or equivalent). Apply grease gun pressure to the fitting until lubricant appears at the top seal.

(6) **Upper A-Arm Ball Joint:** Lubricate at fitting until you see some grease on the relief valve nearby, with good quality lithium-base grease NLGI No. 2 (Shell Retinax LX or equivalent).

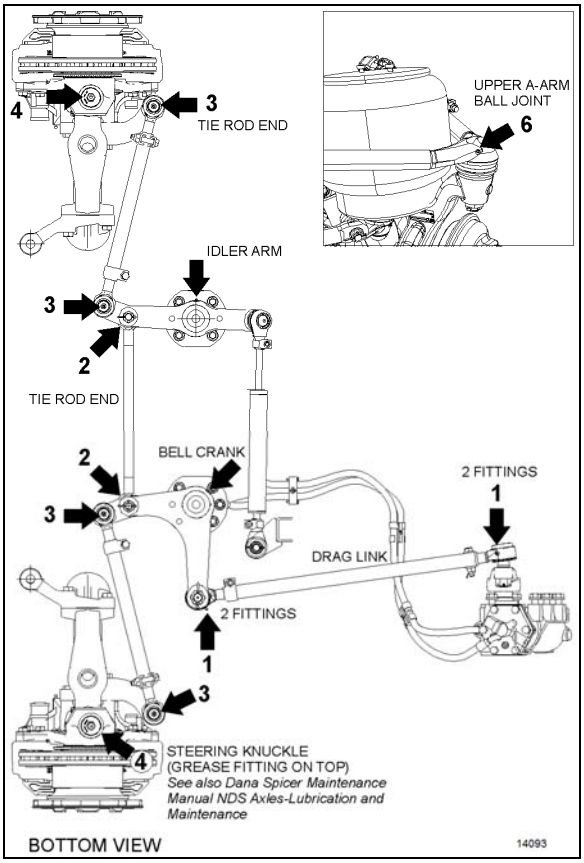

FIGURE 27: LUBRICATION FITTINGS LOCATION

13.6.2 Front I-beam Axle Drag Link

On vehicles equipped with I-beam front axle, the drag link features **lubricated for life** ball joints and a compact fine adjustment system.

Although the ball joints do not require greasing, they do require regular inspection, refer to the following sections for ball joint maintenance.

Adjustment System Visual inspection

Inspect the adjustment system to ensure the threads are firmly seated. Also, a visual inspection should be carried-out looking for damage or corrosion to the adjustment system components. Replace any part showing corrosion or damage.

Adjustment System Functional inspection

Clean the adjustment system with a brush and compressed air prior to inspection, if required.

With the engine running and the vehicle on the ground (with a load on the axle) turn the steering wheel left and right.

To verify that the threads are tight and do not present any play, use one of the following methods:

- Visual inspection
- Place a finger on the separation line from the adjuster sleeve to the threaded ball joint shaft.
  Keep fingers clear of pinch zones.
- Use a dial gage clamped to the tube and feelers aligned on the ball joint to indicate any play

When play is discovered in the adjusting system, replace the complete drag link.

CAUTION

Do not re-use clamp hardware.

Bolt and nut should be replaced every time they are unscrewed.

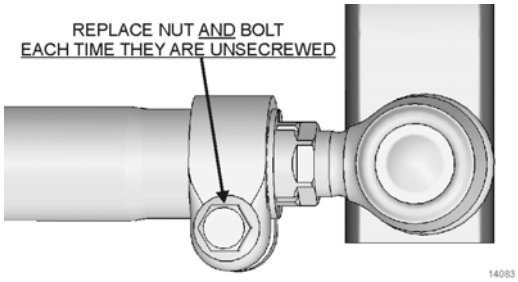

While assembling the clamp, make sure the bolt does not touch the draglink tube.

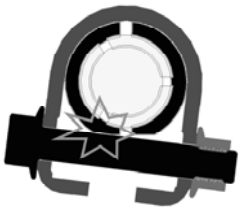

FIGURE 28: I-BEAM FRONT AXLE DRAG LINK

13.7 TIE RODS

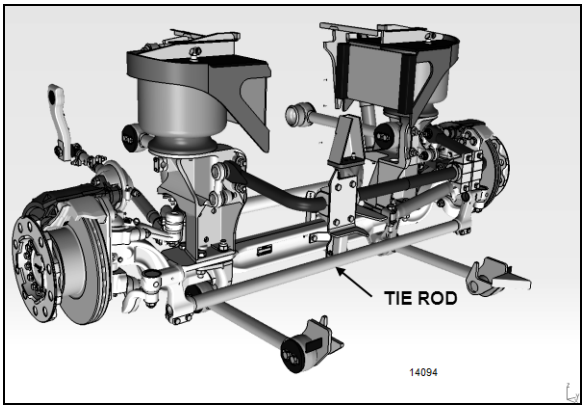

FIGURE 29: TIE ROD

MAINTENANCE

Tie rod ends (ball joint) are provided with grease fittings for pressure lubrication. These grease fittings should be serviced at the intervals specified by the Lubrication And Servicing Schedule in Section 24: LUBRICATION & SERVICING.

To prevent corrosion from forming around the ball pin, remove the old grease bead and assure sufficient grease is applied to purge the old grease and fill the joint and dust seal.

Good quality lithium-base mineral grease NLGI No. 2 like Shell Retinax LX is recommended.

13.8 DRAG LINK AND TIE ROD BALL JOINTS INSPECTION FOR CORROSION

Inspection of ball joints is important. Damaged sealing boots, salt and climatic conditions can cause loss of the corrosion protection coating applied at time of manufacturing.

MAINTENANCE

Inspect drag link and tie rod ball joints for corrosion once a year.

1. Carefully clean the sealing boot or dirt seal contact area to ensure that no contaminants can get under the sealing boot or dirt seal during the following inspection procedure.

2. Use an appropriate inspection tool (e.g. spatula with cut out) to push up (sealing boot) or down (dirt seal) the seal (without damaging it) until ball pin surface is visible. Degrease the ball pin surface and inspect carefully.
3. If there is corrosion of the ball pin or the sealing boot has deteriorated through ageing or is damaged, replace the ball joint.
4. If there is corrosion of the steering arm or tie rod arm area which is in contact with the sealing boot or dirt seal, clean and eliminate all surface irregularities.
5. If there is no corrosion or damage to the sealing boot or dirt seal, smear the steering arm and tie rod arm with Lithium grease and push seal back into its properly seated position.

When dismantling tie rod or drag link, ensure that no damage is caused to the sealing boots, dirt seals or ball joint housings.

13.9 DROP TYPE BALL JOINT

13.9.1 Drop Type Ball Joint End Play

If end play (direction of the ball pin axis) exceeds 0.047” (1.2 mm), readjustment is necessary.

Remove protective cap, using a suitable tool i.e.: a 1” x 1/8” x 9” long flat bar, tighten adjuster piece fully home (SOLID) locating thrust cup onto ball pin.

Still with tool located on adjuster piece, back off carefully (LEAST AMOUNT) until adjuster piece cotter pin is allowed to pass through body, then remove tool.

Reinstall protective cap.

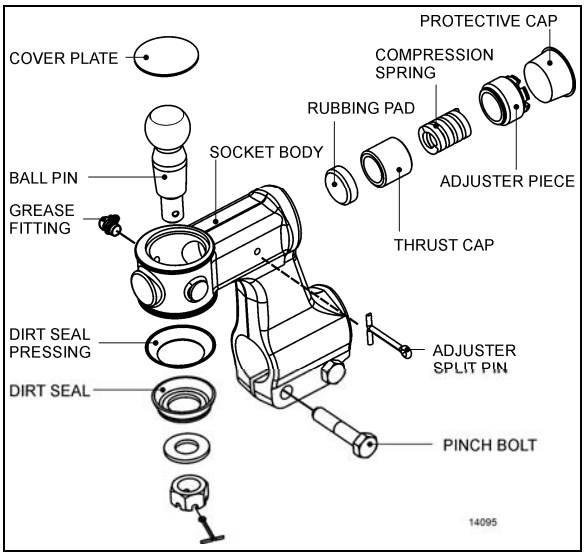

FIGURE 30: DROP TYPE BALL JOINT FOUND ON TIE ROD (2X)

13.9.2 Dismantling Drop Type Ball Joint

1. Remove dirt seal and dirt seal pressing from ball pin.
2. Slacken pinch bolt nut then unscrew and remove ball joint assembly from tie rod having first marked ball joint body and tie rod to enable tracking on re-assembly.
3. Remove adjuster split pin from ball joint body.
4. Remove cap then using a suitable tool i.e.: a piece or 1”x1/8”x 9” flat bar, unscrew and remove adjuster piece. Waggle ball pin to free thrust cap.
5. Remove compression spring and thrust cap from ball joint body.
6. Relieve peening on socket body top then using a hide faced mallet, tap ball pin out of body. This operation will also remove cover plate from body.
7. The rubbing pad can now be removed from body.

Thoroughly clean all parts and check for wear, renewing where necessary.

13.9.3 Assembling Drop Type Ball Joint

1. Apply a bead of Loctite 638 sealant to mating corner of rubbing pad in socket body then knock rubbing pad into its recess in ball joint body.

2. Thoroughly grease rubbing pad and ball pin with Shell Retinax LX or equivalent.
3. Insert ball pin into body.
4. Insert thrust cap, compression spring and adjuster piece into body.
5. Tighten adjuster piece fully home (SOLID) locating thrust cup onto ball pin.
6. Still with tool located on adjuster piece, back off carefully (LEAST AMOUNT) until adjuster piece split pin is allowed to pass through body, and that ball pin shank can be moved by moved of hand, then remove tool.

NOTE: If ball pin does not rotate when re-adjusted in line with above instructions, this suggests that ball pin has local worn flats. In this instance ball pin, thrust cup and rubbing pad MUST be replaced, if not FAILURE could occur in service, i.e. ball pin not being able to move in assembly when turning from lock to lock.

7. Fit cover plate into top of ball joint body, re-peen using a cold chisel to secure.
8. Screw assembled ball joint onto tie rod. Lining up marks on both body and tie rod previously made, or retracking using manual instructions.
9. Fit pinch bolts and nuts then tighten nuts alternately and progressively thus securing ball joint to tie rod.

   TORQUE: 85-103 lb-ft (115-140 Nm)

10. Fit dirt seal (pressing) and dirt seal (rubber) onto ball pin.
11. Locate ball joint and tie rod assembly with lever, carefully align and fit ball pin into hole in tie rod arm.

NOTE: Ball pin and ball pin tapers in bottom tie rod arms must be clean, dry and free from oil prior to assembly.

12. Fit pin washer onto ball pin.
13. Screw pin nut onto ball pin then tighten.

    TORQUE:175-200 lb-ft (237-271 Nm)

14. Using a 2lb hammer, tap tie rod arm to "shock' ball pin into taper hole.
15. Re-torque pin nut

    TORQUE:175-200 lb-ft (237-271 Nm)

16. Fit split pin, if slot/hole are not in line, adjust up to next slot.
17. Re-charge ball joint with Shell “Retinax LX” or equivalent grease through grease fitting.

13.10 STRAIGHT BODY TYPE BALL JOINT

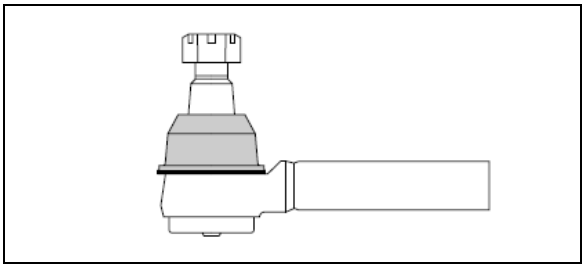

FIGURE 31: STRAIGHT BODY TYPE BALL JOINT

13.10.1 Visual Inspection

- Visually inspect for missing or damages grease fittings and replace if required.
- Damaged sealing boot or improper sealing requires seal replacement.
- Check ball joint connection for missing cotter pins.
- Check for looseness in the ball/socket assembly.

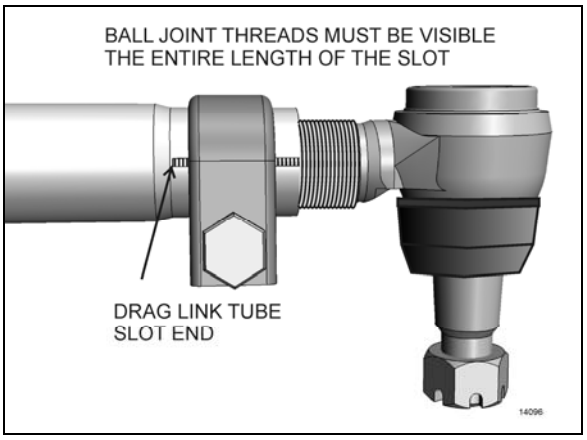

FIGURE 32: ADEQUATE CLAMPING CONDITION

For adequate clamping, the ball joint threads must be visible the entire length of the tube slot. If not, the drag link must be adjusted or replaced. It is either the wrong size, or improper adjustment was used to compensate for another problem (e.g. bent steering arm).

13.10.2 Straight Body Type Ball Joint End Play and Looseness

What creates movement in sockets?

In each straight body type ball joints, the compressive force of the spring creates resistive torque by applying a constant load on the bearing and stud.

As wear occurs on the components, the spring creates less resistive torque. With less torque, you no longer have the precise joint needed for optimum steering, but you do still have a safe linkage. **When all compression is lost, it's time to replace the linkage**. This wear can be caused by impact, lack of lubrication and normal wear.

1. With vehicle engine on, lightly rock the steering wheel while checking for looseness in any threaded joint. Observe any looseness in the two mating tapers or any movement of the ball pin nut. Any looseness requires further inspection. If either of the mating tapered parts shows distortion or wear, both parts must be replaced.
2. With the engine off and wheels straight ahead and no force is being exerted on the linkage by the steering gear, push and pull the ball joint in and out by hand (approximately 100 lbs. force) in the direction of the ball pin. If no movement is detected, the ball joint is safe. **Any movement detected by hand will require the replacement of the ball joint.**

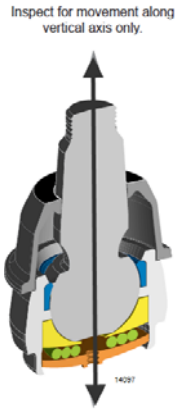

CAUTION

Do not use a wrench or other object to apply leverage when inspecting ball joint. Applying leverage can give distorted results and damage components.

14. DRIVING TIPS

In order to maximize power steering pump service life, do not attempt to turn the steering wheel when the vehicle is stationary, and especially when service brakes are applied (wheel locking will oppose the effect of steering geometry which tends to make the front wheels rotate in opposite directions).

Persisting in turning, or maintaining the steering wheel with an extra effort, could make the hydraulic system work at the relief pressure, and consequently, cause the hydraulic fluid to become overheated.

CAUTION

Never maintain the hydraulic system at the relief pressure for longer than 5/10 seconds to avoid damaging the power steering pump.

NOTE

Unequal or low tire pressure, oversize tires, and vehicle overloading are some of the causes that may increase steering effort.

15. FRONT WHEEL ALIGNMENT

15.1 INDEPENDENT FRONT SUSPENSION ALIGNMENT

Proper front end alignment must be maintained to insure ease of steering and provide satisfactory tire life. When making front end alignment inspections, the vehicle must be level and empty with the full weight of the vehicle on the wheels.

Front end alignment inspections fall into two groups: regular service inspections performed at periodic intervals, and inspections to determine the extent of damage after a collision or severe service.

Regular service inspections concern toe-in, camber and caster.

Any variation from the specified alignment will indicate either a need for adjustment or a more thorough inspection to determine if parts replacement is required.

WARNING

During alignment, both camber and caster among other angles are adjusted. When adjusting these, we install or remove shims at the IFS lower A-arms. After performing alignment, make sure that the following is done:

- Installing a new lock nut after all shims are finalized.
- Torque replaced nuts as per Torque Table.
- Installing a longer bolt if less than 2 threads are remaining after the nut.
- Using a torque seal, leave a mark on the nut for future visual inspection.

15.1.1 Alignment Terminology

Wheel Camber: Camber is the number of degrees the top of the wheel is tilted inward or outward from a true vertical (Figure 37).

Wheel Toe-In: a slight forward convergence given to the wheels of motor vehicles to improve steering and equalize tire wear (D minus E, Figure 37).

Kingpin Inclination: The inclination of the kingpin from vertical toward the center of the vehicle at the top and outward at the bottom (B, Figure 37).

Front Axle Caster: The inclination of the kingpin from vertical in the fore and aft direction (C, Figure 37).

15.1.2 Front End Inspection

Before checking front end alignment, make the following inspection:

1. Check that the vehicle is at normal ride height (see paragraph 3.18 “Suspension Height Adjustment" in section 16 Suspension).
2. Check the tires for proper inflation.
3. Check wheel installation and run-out.
4. Check wheel bearing adjustment.
5. Check tie rods and drag link ends for looseness.
6. Check kingpins for looseness.
7. Check that the length of the torque rod is 21 17/64" (540 mm) and the length of the relay rod is 23 19/64" (592 mm).

15.1.3 Front Wheel Camber

Positive camber is the outward inclination of the wheels at the top, negative or reverse camber is the inward inclination of the wheels at the top. Camber variations may be caused by wear at the wheel bearings, wheel spindle bushings, or bent suspension parts.

Check camber, with an accurate gauge. If camber is incorrect, check suspension parts for wear and replace worn parts. If wear is not perceptible, suspension parts may be bent or lower A-arm may be improperly shimmed.

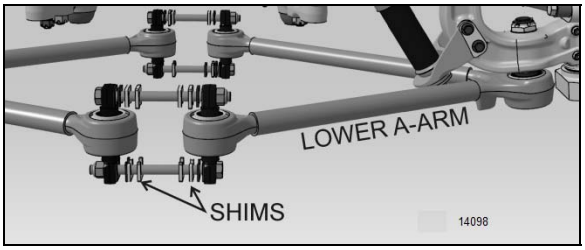

FIGURE 33: SHIMS AT THE LOWER A-ARMS

Check kingpin inclination. If kingpin inclination is incorrect, readjust the camber and check kingpin inclination again.

NOTE

Camber is more important than kingpin inclination, so adjust camber and verify kingpin inclination.

Shim the lower A-arm to adjust camber (Figure 33). If the kingpin inclination is incorrect, the wheel kingpin assembly may be bent and therefore should be replaced.

Excessive positive camber results in irregular wear of the tires at the outer shoulders. Negative or reverse camber causes wear at the inner shoulders.

NOTE

Shim only the lower suspension arm to adjust the front wheel camber.

CAUTION

Once the perfect shim combination is achieved, always install new Stover nuts because the self-locking effect is lost after tightening and loosening of the nut. It is recommended to punch marks to detect loosening of the nuts during future visual inspections.

15.1.4 Front Wheel Toe-In

Toe-in is measured from the center of the tire treads. Measurements at the front and rear of the tires must be made at the same height from the floor. Incorrect toe-in results in excessive tire wear and steering instability with a tendency to wander.

Toe-In Check

1. Check the camber adjustment and adjust if necessary.
2. Hoist the front of the vehicle and spin the wheels marking the centerline of the tire treads.
3. Place the wheels in the straight ahead position and lower the vehicle to rest on the floor.
4. Roll the vehicle ahead several feet. This removes any slack caused by looseness in the wheel bearings or steering connections.
5. Check the distance between the tire centerlines at the front and rear of the front tires. These two measurements must be made at the same height above the floor. The front measurement must be 3/32 ±1/32 of an inch less than the rear measurement.

Toe-In Adjustment

1. Loosen the tie rod clamp bolts.
2. Using a pipe wrench, turn the tie rod tubes to obtain the toe-in measurement specified in step 5 under paragraph "Toe-in Check".
3. Tighten the tie rod clamp bolts and recheck toe-in.
4. Check that the angular relationship of the pitman arm to the steering gear is as shown in Figure 34.

NOTE

Use only tie rods to adjust toe-in.

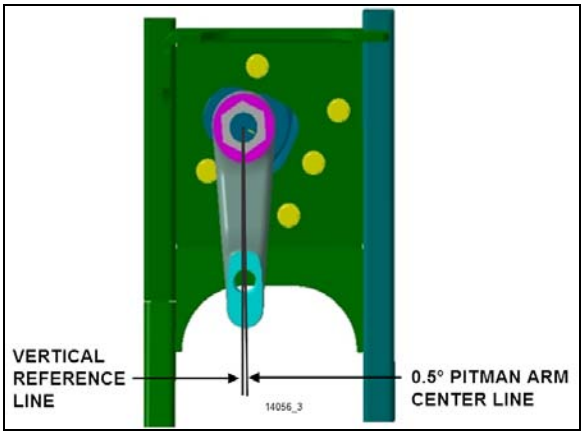

FIGURE 34: IFS PITMAN ARM ALIGNMENT

15.1.5 Front Wheel Caster

Positive caster is the inclination of the top of the kingpins toward the rear of the vehicle. Negative or reverse caster is the inclination of the kingpins toward the front of the vehicle. This vehicle is designed with positive caster. The purpose of caster is to provide steering stability by keeping the wheels in a straight ahead position.

Caster variations may be caused by bent upper suspension A-arm, lower suspension A-arm, or kingpin housing. Caster should be adjusted with shims. Precision instruments should be used to measure caster. Shim bell crank and idler arm to adjust caster (Figure 37).

Variations from the specified caster will affect steering stability, cause wandering, wheel shimmy, and reduce steer re-centering when pulling out of curves.

NOTE

On Independent Front Suspension, caster on right wheel must be equal or greater than caster on left wheel, without exceeding 0.3°.

15.1.6 Major Damage

If the suspension has sustained major damage, it may be necessary to shim the bell crank and the idler arm to avoid the bump steer or roll steer. Moreover refer to paragraph "Front End Alignment".

15.1.7 Alignment Specifications

Use static wheel alignment systems which work with angle measurements only, such as Josam or Hunter systems.

NOTE
On Independent Front Suspension, caster on right wheel must be equal or greater than caster on left wheel, with a maximum difference of 0.3°.

X3-45 VIP
INDEPENDENT FRONT SUSPENSION

Load	Minimum value		Nominal value		Maximum value	
	Non-converted	Converted	Non-converted	Converted	Non-converted	Converted
Right camber	0.20°	-0.20°	0.30°	0°	0.50°	0.20°
Left camber	0.20°	-0.20°	0.30°	0°	0.50°	0.20°
Right caster	2.55°		2.8°		3.05°	
Left caster	2.55°		2.8°		3.05°	
Total toe	0.02°	0.04°	0.04°	0.06°	0.06°	0.08°

X3-45 Coaches
WITH INDEPENDENT FRONT SUSPENSION

	Minimum value	Nominal value	Maximum value
Right camber	0.0°	0.150°	0.30°
Left camber	0.0°	0.150°	0.30°
Right caster	2.35°	2.6°	2.85°
Left caster	2.35°	2.6°	2.85°
Total toe-in	0.04°	0.06°	0.08°

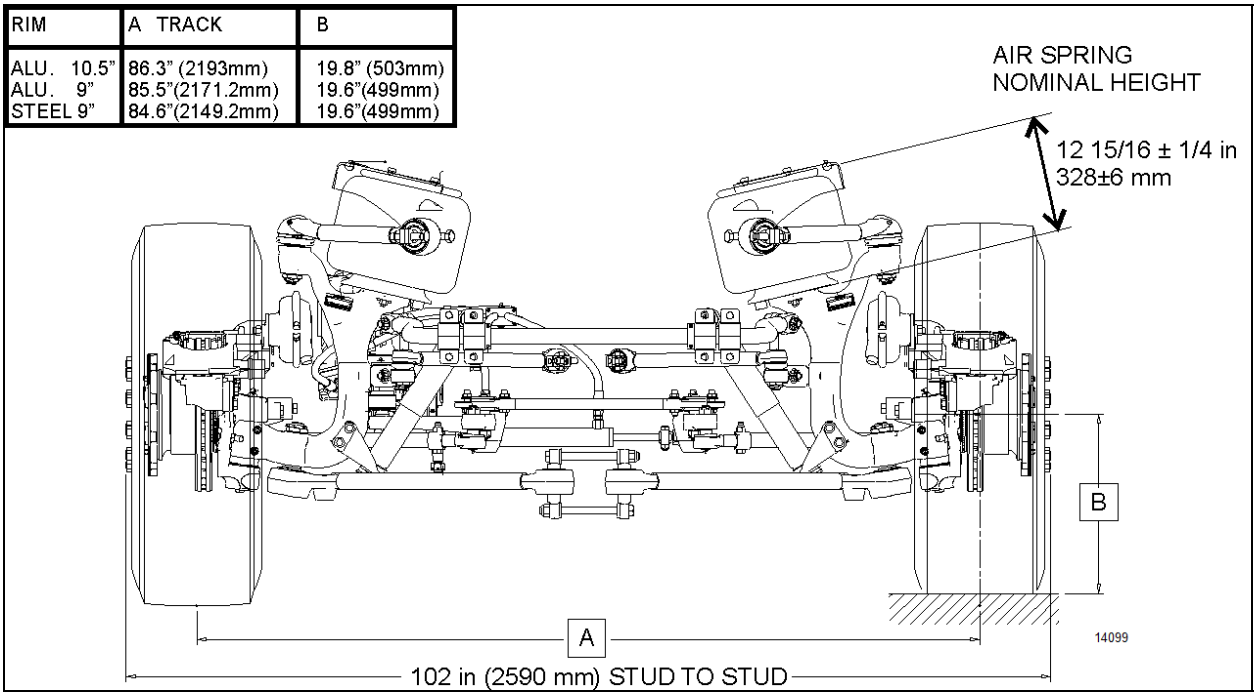

RIM	A TRACK	B
ALU. 10.5”	86.3” (2193mm)	19.8” (503mm)
ALU. 9”	85.5”(2171.2mm)	19.6”(499mm)
STEEL 9”	84.6”(2149.2mm)	19.6”(499mm)

FIGURE 35: IFS NOMINAL DIMENSIONS

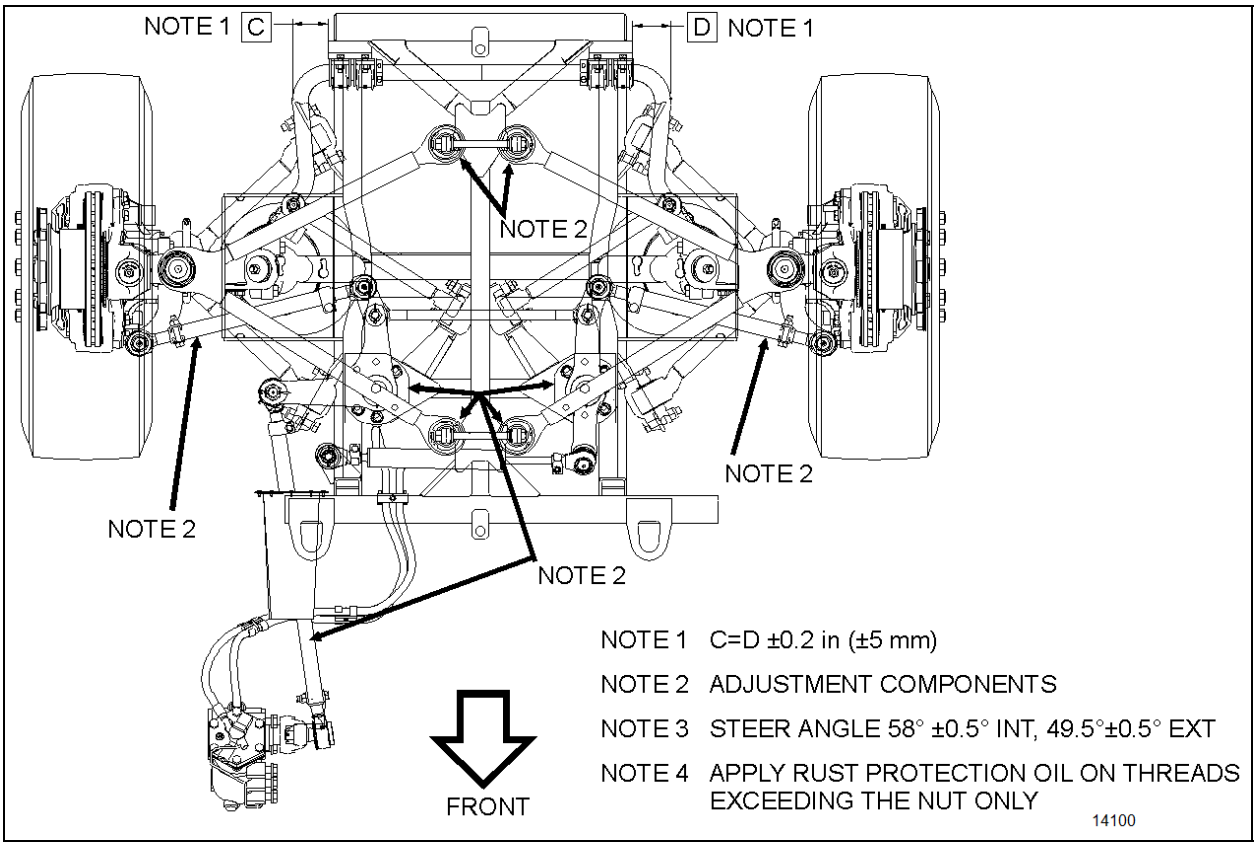

FIGURE 36: NOTE 2 INDICATES WHERE ADJUSTMENT MAY BE PERFORMED AT IFS ALIGNMENT

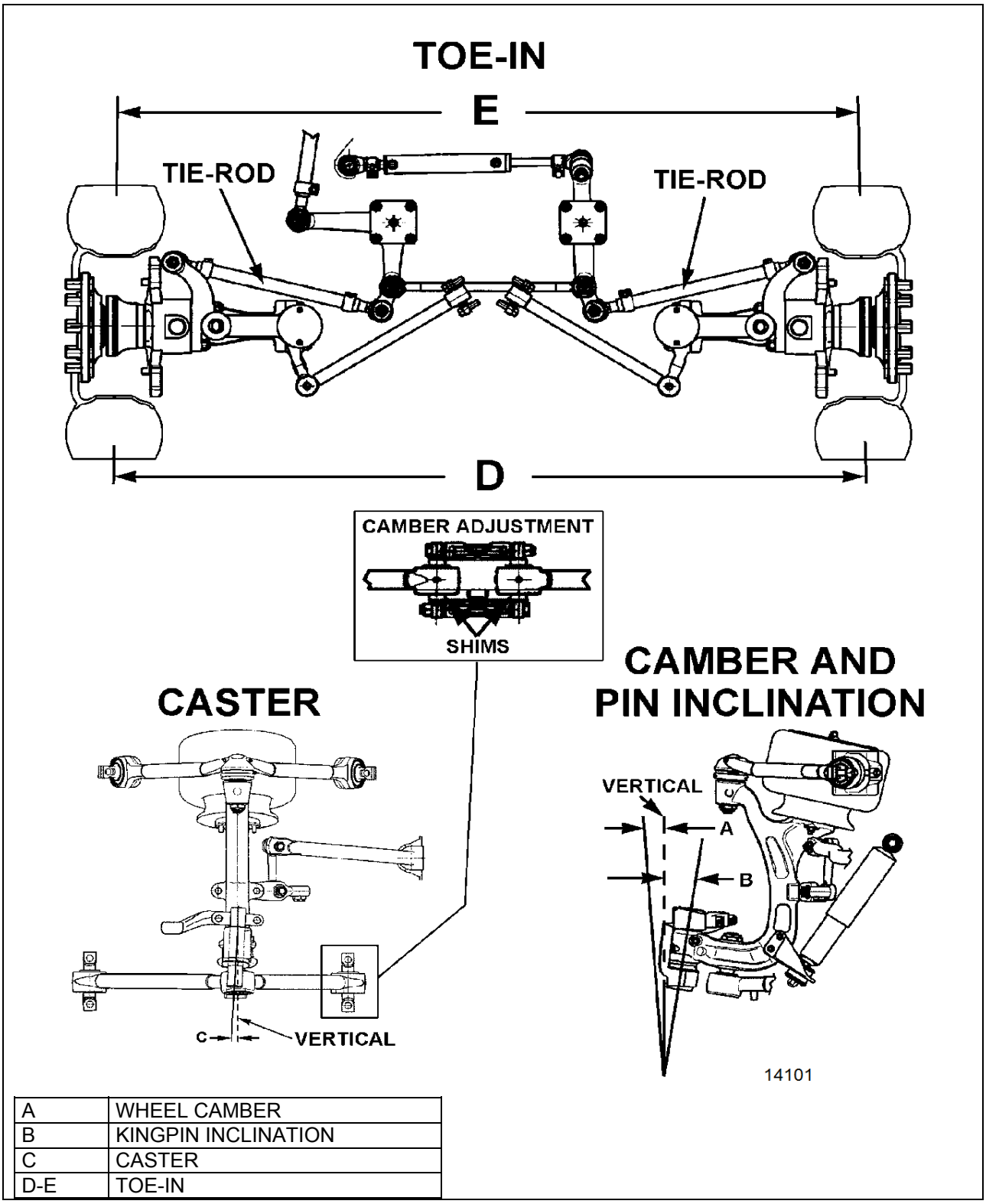

A	WHEEL CAMBER
B	KINGPIN INCLINATION
C	CASTER
D-E	TOE-IN

FIGURE 37: FRONT END ALIGNMENT DIAGRAM 16051

15.2 I-BEAM AXLE - FRONT WHEEL ALIGNMENT

Correct front wheel alignment must be maintained for steering comfort and satisfactory tire life. Road shocks and vibrations, as well as normal stress and strains on the front-end system can, under normal operating conditions, result in loss of front wheel alignment.

Check the front wheel alignment when the following occurs:

1. Every 200,000 miles (320 000 km) or 24 months (normal maintenance);
2. When the vehicle does not steer correctly; or
3. To correct a tire wear condition.

There are two types of front wheel alignment: minor alignment and major alignment.

15.2.1 Inspection Before Alignment

Check the following before doing a front wheel alignment:

1. Ensure that the vehicle is at normal riding height. See Section 16, *"Suspension"* under heading 7: *"Suspension Height Adjustment"*.
2. Ensure that front wheels are not the cause of the problem. See Section 13, *"Wheels, Hubs and Tires"*. Inspect the tires for wear patterns indicating suspension damage or misalignment.
   a. Make sure the tires are inflated to the specified pressure.
   b. Make sure the front tires are the same size and type.
   c. Make sure the wheels are balanced.
   d. Check wheel installation and straightness.
3. Check the wheel bearing adjustment. See Section 13, *"Wheels, Hubs and Tires".*
4. Check steering linkage for bending and pivot points for looseness.
5. Check knuckle pins for evidence of excessive wear.
6. Check radius rods for bending and rubber bushings for evidence of excessive wear.
7. Make sure all fasteners are tightened to the specified torque. Use a torque wrench for verification. As soon as the fastener starts to move, record the torque. Correct if necessary. Replace any worn or damaged fasteners.

15.2.2 Minor Front Wheel Alignment

Perform a minor front wheel alignment for all normal maintenance conditions.

Perform the minor front wheel alignment in the following sequence:

1. Inspect all the systems that affect the wheel alignment. See paragraph 15.2.1, *"Inspection Before Alignment"* in this section.
2. Check the hub bearings. See section 13, *"Wheels, hubs and Tires"* under heading 8: Front and Tag Axle Wheel Hubs.
3. Check and adjust the toe-in.

15.2.3 Major Front Wheel Alignment

Perform a major front wheel alignment to correct steering and tire wear conditions.

Perform the major front wheel alignment in the following sequence:

1. Inspect all systems affecting the wheel alignment. See paragraph 15.2.1, *"Inspection Before Alignment"* in this section.
2. Check the hub bearings. See section 13, *"Wheels, hubs and Tires"* under heading 8: Front and Tag Axle Wheel Hubs.

NOTE
If steering angle stoppers are changed, a special procedure is required for readjusting gearbox steering limiter. See paragraph 15.2.7 "Hydraulic Stop" in this section.

3. Check and adjust the turning angle adjustment.
4. Check the camber angle.
5. Check and adjust the caster angle.

6. Check and adjust the toe-in.

15.2.4 Turning Angle Adjustment

The maximum turning angle is set through the two steering stop screws installed on the axle center. The turning angle is factory adjusted to accommodate the chassis design, and therefore, does not require adjustment on new vehicles. However, it should be checked and adjusted any time any component of the steering system is repaired, disassembled or adjusted.

Check if front tires rub against the frame or if the steering gear has been serviced.

Proceed with the following method to check the steering maximum turning angle:

15.2.5 R.H. Turn Adjustment

CAUTION

To prevent the steering damper from interfering with the adjustment of turning angles, make sure its fixing bracket is at the correct location on the axle center (refer to paragraph 13.5)

1. Turn steering wheel to the right until the boss on the axle center touches the right stop screw.
2. Verify the nearest point of contact of the ball socket body with the air bellows support assembly. Measure the distance between those two points.
3. The distance between these two points should be approximately 1/8 inch (3 mm). If not, the steering stop screws must be readjusted.
4. Verify the nearest point of contact of the drag link with the tire. Measure the distance between those two points.
5. The distance should be 1 inch (25 mm) or more. If not, the steering stop screws must be readjusted.
6. This must be done for a full right turn.
7. If readjustment is required:
   a. Remove the swivel stop screw.
   b. Add to the stop screw the required number of washers to obtain the proper measure, tighten the stop screw afterwards. Two washers of different thickness are available: 1/16 inch and 3/16 inch.

15.2.6 L.H. Turn Adjustment

1. Turn steering wheel to the left until the boss on the axle center touches the left stop screw.
2. Verify the nearest point of contact of the ball socket body with the air bellows support assembly. Measure the distance between those two points.
3. The distance between these two points should be approximately 1/8 inch (3 mm). If not, the steering stop screws must be readjusted.
4. Check the stroke of the steering stabilizer cylinder (damper). It should not exceed 12.59 inches (320 mm).
5. The steering stopper screw must be in contact before the steering stabilizer reaches the end of the stroke.
6. This must be done for a full left turn.
7. If readjustment is required:
   a. Remove the swivel stop screw.
   b. Add to the stop screw the required number of washers to obtain the proper measure, tighten the stop screw afterwards. Two washers of different thickness are available: 1/16 inch and 3/16 inch.

15.2.7 Hydraulic Stop

NOTE

Before steering limiter readjustment, verify vehicle wheel alignment and ensure that oil level is checked and that air bleeding is done.

Refer to *"ZF-SERVOCOM Repair Manual"* found on your Technical Publications USB flash drive, under heading *Setting and Functional Test*

15.2.8 Front Wheel Camber

Wheel camber is the number of degrees the top of the wheel tilts outward (positive) or inward (negative) from a vertical angle (Figure 38).

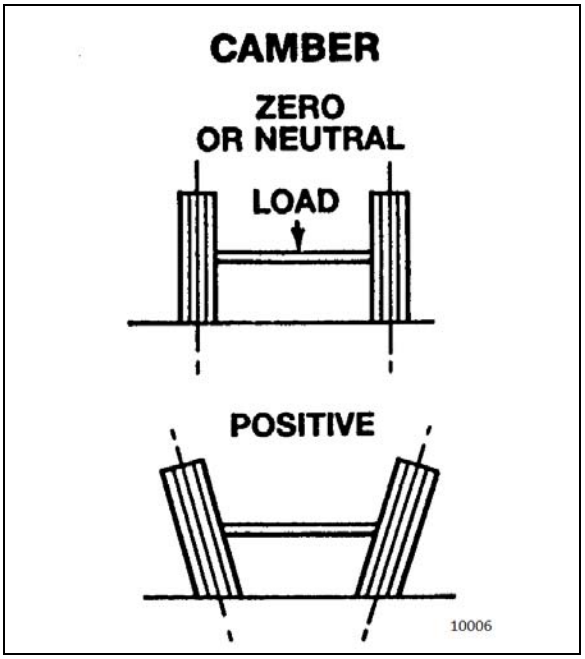

FIGURE 38: CAMBER

The camber angle is not adjustable. Camber variations may be caused by wear at the wheel bearings, steering knuckle pins or by a bent knuckle or sagging axle center. Steering effort is affected by improper camber, and uneven tire wear will result. Excessive positive camber causes an irregular wear of tire at the outer shoulder and excessive negative camber causes wear at the inner shoulder.

15.2.9 Camber Check

For camber specifications, refer to paragraph 15.2.12 in this section

1. Use an alignment machine to check the camber angle.
2. If camber reading is not in the specifications, adjust the wheel bearings and repeat the check. If the reading is still not within specifications, verify the steering knuckle pins and axle center.
3. See instructions in "DANA SPICER Maintenance Manual Model NDS and Maintenance Manual NDS Axles".
4. Check the wheel lateral distortion as instructed in Section 13, *"Wheels, Hubs and Tires"* under heading, *"Checking for Distorted Wheel on Vehicle"*. If distortion is excessive, straighten or replace wheel(s).

15.2.10 Front Axle Caster

For caster specifications, refer to paragraph 15.2.12 *in this section.*

Positive caster is the rearward tilt from the vertical axis of the knuckle pin. Negative caster is the forward tilt from the vertical axis of the knuckle pin (Figure 39). This vehicle is designed with a positive caster. The purpose of the caster angle is to give a trailing effect. This results in stabilized steering and a tendency for the wheels to return to the straight-ahead position after taking a turn.

Excessive caster results in hard steering around corners. A shimmy may also develop when returning to the straight ahead position (pulling out of curves).

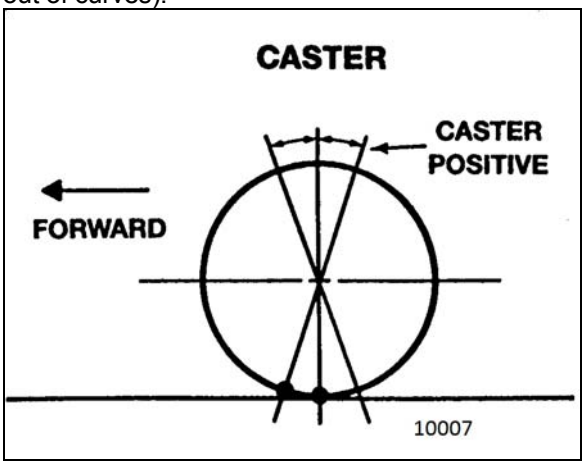

FIGURE 39: CASTER

Insufficient caster will cause wandering and steering instability. Caster variations may be caused by a bent axle, tilting or distortion of the side suspension supports, damaged radius rod bushings, or unequal tightening of the front and rear suspension support bolts. Incorrect caster must be corrected by replacing the damaged suspension parts. A precision instrument should be used to measure the caster.

NOTE
The caster of this vehicle is factory set and is not adjustable. However, if after replacing damaged parts or in case of improper caster due to irregular setting, the front axle caster needs adjustment; it can be adjusted by means of shims (Prevost #110663) on the left-hand side upper radius rod support in order to obtain minor adjustment.

15.2.11 Front Wheel Toe-In

Wheel toe-in is the degree (usually expressed in fractions of an inch) to which the forward part of the vehicle front wheels are closer together than the rear part, measured at wheel centerline height with the wheels in the normal ‘’straight-ahead’’ position of the steering gear.

Incorrect toe-in results in excessive tire wear caused by side slippage and also steering instability with a tendency to wander. Toe-in may be measured from the center of tire tread or from the inside of the tires. Take measurements at both front and rear of axle (see ’’A” and ‘’B’’ in Figure 40).

When setting toe-in adjustment, the front suspension must be neutralized; that is, all component parts must be in the same relative position when marking the adjustment as they will be when in operation.

To neutralize the suspension, the vehicle must be rolled forward, approximately ten feet.

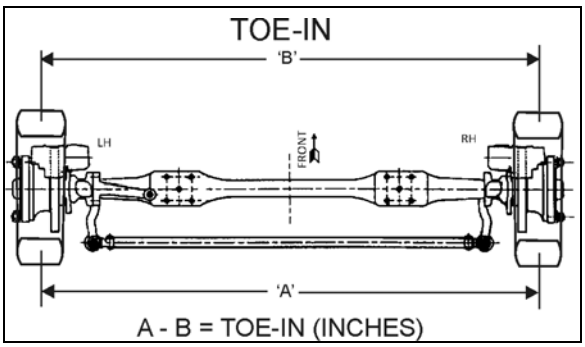

FIGURE 40: TOE-IN MEASUREMENT

For toe-in specifications, refer to paragraph 15.2.12 in this section.

By rolling the vehicle forward, all tolerances in the front suspension are taken up and the suspension is then in its normal operating position. Neutralizing the front suspension is extremely important, especially if the vehicle has been jacked up in order to mark the tires. Otherwise, the front wheels will not return to their normal operating position due to the tires gripping the floor surface when the vehicle jack is lowered.

NOTE
’’Toe-in’’ measurements must be taken at the horizontal axis of the wheel centerline.

15.2.12 Inspection and Adjustment

Before checking front wheel toe-in, first check the camber angles and make the necessary corrections.

1. Measure the toe-in.
2. If the toe-in measurement is not within the specified tolerance, carry out the following procedure :
   a. Loosen the pinch bolt nuts and bolts on each tie rod end.
   b. Turn the tie rod until the specified toe-in measurement is obtained.
   c. Tighten the pinch bolt nuts alternately and progressively thus securing all tie rod joints.

TORQUE 85-103 lb-ft (115-140 Nm)

Use static wheel alignment systems which work with angle measurements only, such as Josam or Hunter systems. Static alignment specifications are listed in the following tables:

FRONT WHEEL ALIGNMENT SPECIFICATIONS WITH I-BEAM AXLE			
Front Wheel Alignment	**Minimal**	**Nominal**	**Maximal**
Camber R.H. and L.H. * (degrees)	-0.250	0.125	0.375
Caster R.H. and L.H. (degrees)	2	2.75	3.5
Total toe (A minus B) (degrees)	0.04	0.06	0.08

16. TROUBLESHOOTING

CONDITION	CAUSE	CORRECTION
Tires wear out quickly or have uneven tire tread wear.	1. Tires have incorrect air pressure. 2. Tires out-of-balance. 3. Incorrect tag axle alignment. 4. Incorrect toe-in setting. 5. Incorrect steering arm geometry.	1. Put specified air pressure in tires. 2. Balance or replace tires. 3. Align tag axle. 4. Adjust toe-in specified setting. 5. Service steering system as necessary.
Vehicle is hard to steer.	1. Low pressure in the power steering system. 2. Steering gear not assembled correctly. 3. Steering linkage needs lubrication. 4. King pins binding. 5. Incorrect steering arm geometry. 6. Caster improperly adjusted. 7. Tie rod ends hard to move. 8. Worn thrust bearing.	1. Repair power steering system. 2. Assemble steering gear correctly. 3. Lubricate steering linkage. 4. Replace king pins. 5. Service steering system as necessary. 6. Adjust caster as necessary. 7. Replace tie rod ends. 8. Replace thrust bearing.
Bent or broken steering arm, steering top lever or tie rod assembly.	1. Too much pressure in the power steering system. 2. Cut-off pressure of the power steering system improperly adjusted. 3. Vehicle not powered on correctly. 4. Power steering system not installed correctly.	1. Replace damaged part(s), adjust power steering system to specified pressure. 2. Make sure vehicle is powered on correctly. 3. Correctly install the power steering system. 4. Correctly install the power steering system.
Worn or broken steering ball pin.	1. Drag link fasteners tightened past specified torque. 2. Lack of lubrication or incorrect lubricant. 3. Power steering stops improperly adjusted.	1. Replace damaged part(s), tighten drag link fasteners to specified torque. 2. Lubricate linkage with specified lubricant. 3. Adjust stops to specified dimension.
Worn king pins and knuckle bushings.	1. Worn or missing seals and gaskets. 2. Incorrect lubricant. 3. Axle not lubricated at scheduled frequency. 4. Incorrect lubrication procedures. 5. Lubrication schedule does not match operating conditions.	1. Replace damaged part(s), replace seals and gaskets. 2. Lubricate axle with specified lubricant. 3. Lubricate axle at scheduled frequency. 4. Use correct lubrication schedule to match operating conditions. 5. Change lubrication schedule to match operating conditions.
Vibration or shimmy of front axle during operation.	1. Caster not adjusted properly. 2. Wheels and/or tires out-of balance. 3. Worn steering stabilizer cylinder.	1. Adjust caster. 2. Balance or replace wheels and/or tires. 3. Replace steering stabilizer cylinder.

17. TORQUE SPECIFICATIONS

The torque specifications applicable to the front axle steering are grouped with information regarding the front suspension. Please refer to Section 16: SUSPENSION of this manual.

18. SPECIFICATIONS

Power Steering Gear

Make ..... ZF-SERVOCOMTRONIC
Type ..... Speed Sensitive
F.E.W. ..... 16,600 lbs (7 545 kg)
Pressure rating ..... 2,175 psi (150 Bar)
Gear ratio (center) ..... 22.2 : 1
Gear ratio (extremities) ..... 26.2 : 1
Minimum pump flow for 1.5 hwt/sec ..... 4.22 gpm (16 lpm)

Power Steering Gear

Make ..... ZF-SERVOCOM
F.E.W. ..... 16,600 lbs (7 545 kg)
Pressure rating ..... 2,175 psi (150 Bar)
Gear ratio (center) ..... 22.2 : 1
Gear ratio (extremities) ..... 26.2 : 1
Minimum pump flow for 1.5 hwt/sec ..... 4.22 gpm (16 lpm)

Power Steering Gear (with IFS)

Make ..... ZF-SERVOCOM
Type. 8098
F.E.W. ..... 19,000 lbs (8 618 kg)
Pressure rating ..... 2,320 psi (160 Bar)

Power Steering Reservoir

Oil capacity ..... 4 US qts (3.7 liters)
Make ..... Nelson Muffler

Steering Stabilizer Cylinder (Damper)

Extended length ..... 32.73±0.12"
Collapsed length ..... 20.26±0.12"
Stroke ..... 12.47±0.12"

Front I-Beam Axle

Make ..... DANA SPICER EUROPE
Model S84U
Front Track ..... 84.4 inches (2 145 mm)
Rated load capacity ..... 16,500 lbs (7 500 kg)

CONTENTS

SECTION CHANGE LOG **4**

1 TORQUE TABLES **5**

1.1 FRONT I-BEAM AXLE AND RELATED COMPONENTS 5
1.2 INDEPENDENT FRONT SUSPENSION 7
1.3 REAR SUSPENSION 9

2 DESCRIPTION **14**

3 FRONT I-BEAM AXLE SUSPENSION **14**

3.1 AIR SPRINGS 14
3.1.1 Inspection *14*
3.1.2 Removal *14*
3.1.3 Installation *15*
3.2 SHOCK ABSORBERS 15
3.2.1 Inspection *16*
3.2.2 Removal *16*
3.2.3 Installation *17*
3.3 RADIUS RODS 17
3.3.1 Inspection *17*
3.3.2 Radius Rod Removal *18*
3.3.3 Stripping Down *19*
3.3.4 Radius Rod Assembly *19*
3.3.5 Radius Rod Installation *19*
3.4 SWAY BAR 19
3.4.1 Removal *19*
3.4.2 Installation *19*

4 INDEPENDENT FRONT SUSPENSION (IFS) **20**

4.1 STEERING LINKAGE 20
4.2 STEERING LINKAGE INSTALLATION SEQUENCE 23
4.3 PITMAN ARM 23
4.3.1 Removal *23*
4.3.2 Installation *23*
4.4 DRAG LINK 24
4.4.1 Adjustment *24*
4.5 BELL CRANK AND IDLER ARM 24
4.5.1 Bell Crank or Idler Arm Removal *24*
4.5.2 Bell crank or Idler Arm Hub Disassembly *25*
4.5.3 Bell Crank or Idler Arm Hub Reassembly *25*
4.6 RELAY ROD 26
4.6.1 Replacement *26*
4.7 TIE RODS 26
4.7.1 Removal *26*
4.7.2 Installation *27*
4.8 STEERING ARMS 27
4.8.1 Removal *28*
4.8.2 Installation *28*
4.9 LUBRICATION FITTINGS 30
4.10 BALL JOINTS – GENERAL RECOMMENDATIONS 31

4.11 FRONT-END ALIGNMENT 31
4.11.1 Alignment Terminology 31
4.11.2 Front End Inspection 32
4.11.3 Front Wheel Camber 32
4.11.4 Front Wheel Toe-In 32
4.11.5 Front Wheel Caster 33
4.11.6 Major Damage 33
4.11.7 Alignment Specifications 33
4.12 LOWER AND UPPER A-ARM BALL PIN BUSHING REPAIR 38
4.12.1 Inspection 38
4.12.2 Stripping Down 38
4.12.3 Assembly 38
4.13 LOWER A-ARM BALL JOINT REPAIR 39
4.13.1 Stripping Down 39
4.13.2 Assembly 39
4.14 UPPER A-ARM BALL JOINT 39
4.14.1 Visual Inspection 39
4.14.2 Play Measurement 39
4.15 FRONT AIR SPRINGS 40
4.15.1 Inspection 40
4.15.2 Removal 40
4.15.3 Installation 41
4.16 SHOCK ABSORBERS 41
4.16.1 Shock Absorber Removal 41
4.16.2 Shock Absorber Installation 42
4.17 SWAY BAR 42
4.17.1 Removal 42
4.17.2 Installation 42

5 REAR SUSPENSION 43

5.1 AIR SPRINGS 44
5.1.1 Inspection 44
5.1.2 Removal 44
5.1.3 Installation 44
5.2 SHOCK ABSORBERS 45
5.2.1 Inspection 45
5.2.2 Removal 46
5.2.3 Installation 46
5.3 RADIUS RODS 46

6 SUSPENSION AIR SYSTEM 46

6.1 INSPECTION 47
6.2 AIR LINE TEST 47

7 SUSPENSION HEIGHT ADJUSTMENT 47

7.1 NORMAL RIDE HEIGHT 47
7.2 HEIGHT CONTROL VALVES 48
7.3 MAINTENANCE 48
7.3.1 Removal and installation 48
7.3.2 Air leakage test 49

8 "LEVEL-LOW" LEVELING SYSTEM – VIP SERIES OPTION ONLY 49

8.1 PRINCIPLES OF OPERATION 49

8.2 MAINTENANCE....49

9 FRONT KNEELING SYSTEM (COACHES ONLY)....50

9.1 PRINCIPLE OF OPERATION....50
9.2 MAINTENANCE....50
9.3 AIR SPRING CONTROL SOLENOID VALVES....50
9.3.1 Removal and installation....50

10 HIGH-BUOY SYSTEM (COACHES ONLY)....50

10.1 PRINCIPLES OF OPERATION....50
10.2 MAINTENANCE....51
10.3 HIGH-BUOY – PRESSURE REGULATOR....51
10.3.1 Adjustment....51
10.3.2 Disassembly....51
10.3.3 Cleaning....51
10.3.4 Reassembly....52

11 LOW-BUOY SYSTEM (COACHES ONLY)....52

11.1 PRINCIPLES OF OPERATION....52
11.2 MAINTENANCE....52

12 AIR SYSTEM....52

12.1 AIR TANK MAINTENANCE....53
12.1.1 Wet Air Tank....53
12.1.2 Primary Air Tank....53
12.1.3 Secondary Air Tank....54
12.1.4 Accessory Air Tank....54
12.1.5 Expansion Air Tank....54
12.2 EMERGENCY FILL VALVES....54

13 TROUBLESHOOTING....55

14 SPECIFICATIONS....56

SECTION CHANGE LOG

	DESCRIPTION	DATE
1		
2		
3		
4		
5		
6		

1 TORQUE TABLES

1.1 FRONT I-BEAM AXLE AND RELATED COMPONENTS

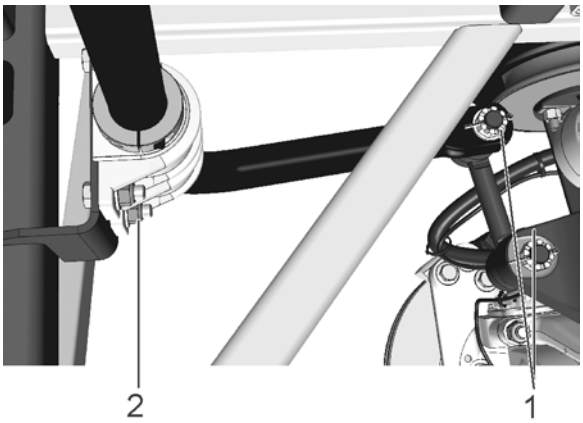

16187

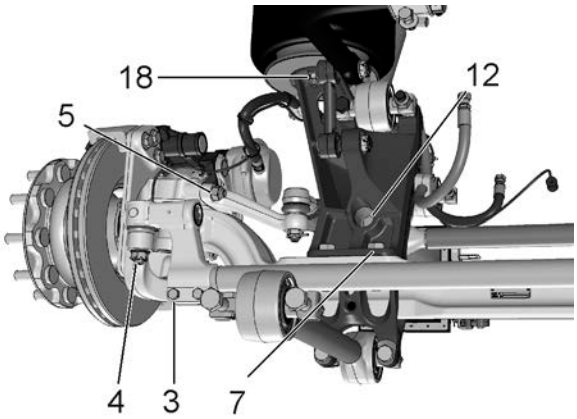

16188

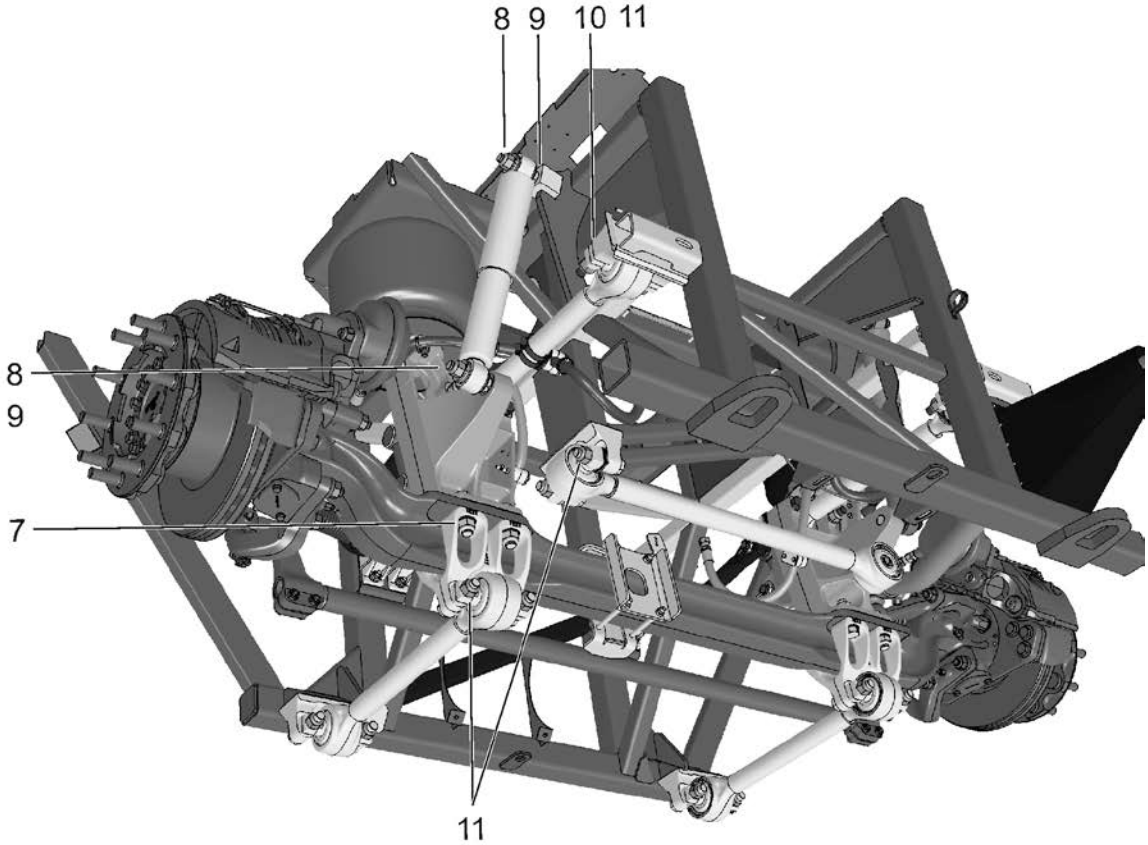

16192

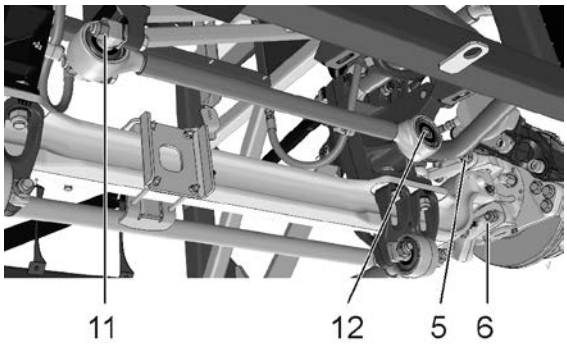

16191

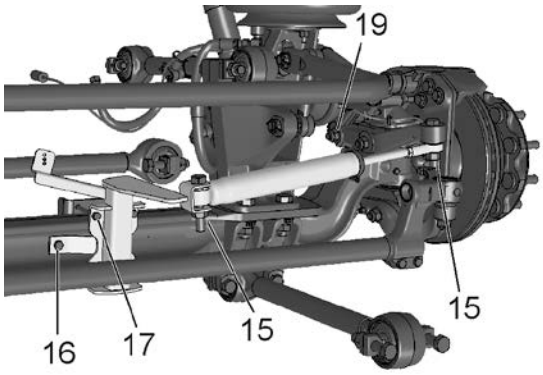

16193

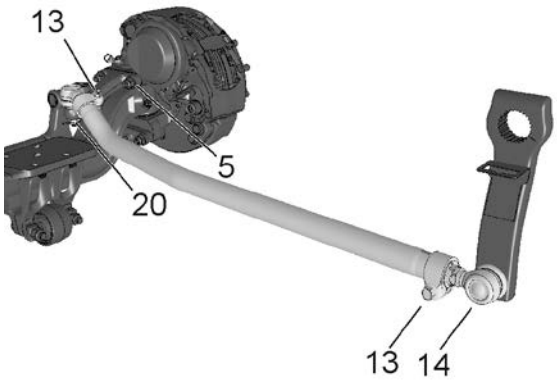

16194_1

FRONT I-BEAM AXLE			
No	DESCRIPTION	QTY	TORQUE (dry)
1	Sway bar link, upper and lower nuts	4	165-200 lb-ft (224-271 Nm)
2	Sway bar bushing collars (front suspension)	8	80-100 lb-ft (108-136 Nm)
3	Tie rod end clamp bolts	4	65-75 lb-ft (88-102 Nm)
4	Tie rod end ball pin nuts	2	150-200 lb-ft (203-271 Nm)
5	Steering arm stud nuts	2	285-315 lb-ft (386-427 Nm)
6	Tie rod arm stud nuts	4	285-315 lb-ft (386-427 Nm)
7	I-beam axle mount nuts	8	230-280 lb-ft (312-380 Nm)
8	Shock absorber upper & lower mounting nuts	2	99-121 lb-ft (134-164 Nm)
9	Shock absorber pins, upper & lower	2	350-400 lb-ft (475-542 Nm)
10	Radius rod retaining studs	4	90-110 lb-ft (122-149 Nm)
11	Radius rod retaining nuts	18	225-255 lb-ft (305-346 Nm)
12	Transverse radius rod taper pin screw	1	206 lb-ft (279 Nm)
13	Drag link clamp bolts	2	118-133 lb-ft (160-180 Nm)
14	Drag link ball joint stud nut, fore	1	165-236 lb-ft (224-320 Nm)
15	Steering damper nuts	2	100-120 lb-ft (136-163 Nm)
16	Steering damper bracket bolt	1	39-45 lb-ft (53-61 Nm)
17	Steering damper bracket nuts	4	30-36 lb-ft (41-49 Nm)
18	Air spring nut	4	25 lb-ft (34 Nm)
19	Steering damper arm nuts	2	285-315 lb-ft (386-427 Nm)
20	Drag link ball joint stud nut, aft	1	140-200 lb-ft (190-271 Nm)

1.2 INDEPENDENT FRONT SUSPENSION

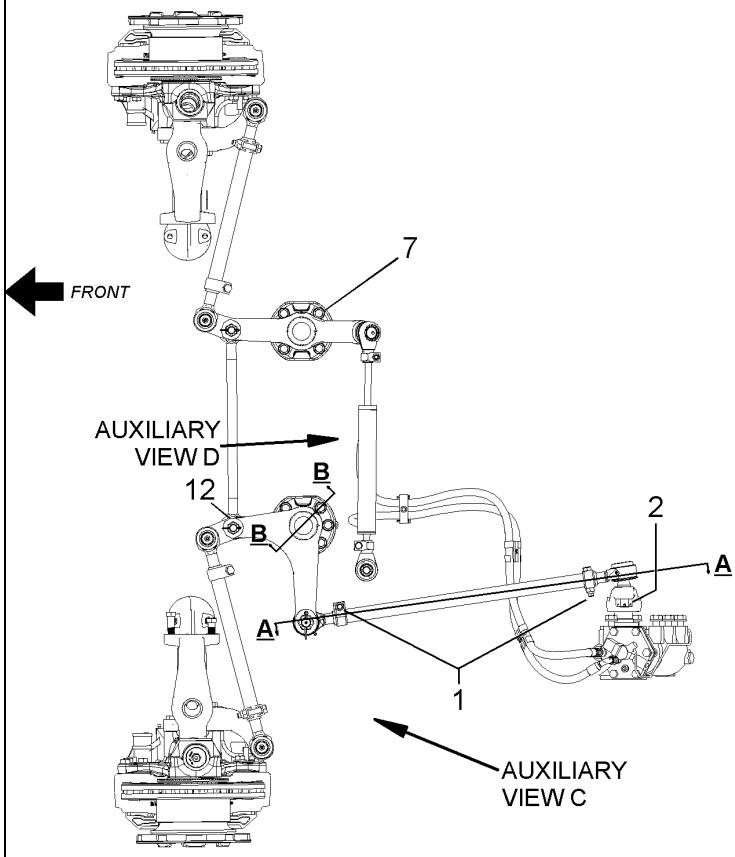

AS SEEN FROM UNDER THE VEHICLE

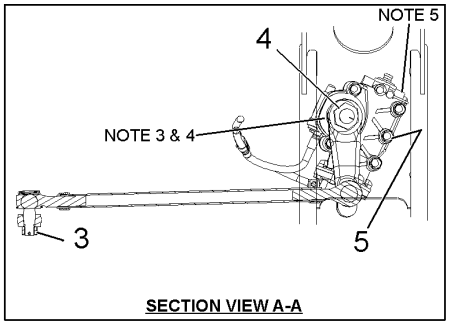

SECTION VIEW A-A

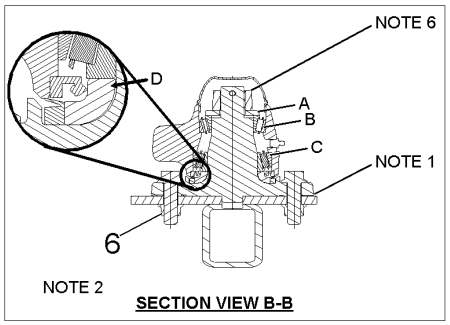

SECTION VIEW B-B

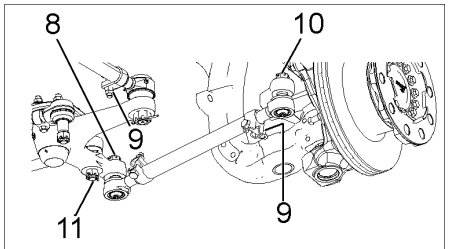

AUXILIARY VIEW C

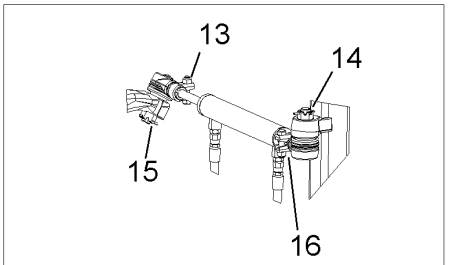

AUXILIARY VIEW D

NOTE 1 USING DEGREASER, CLEAN SHIMS AND MATING SURFACES PRIOR INSTALLATION

NOTE 2 PLACE NUTS ON TOP. APPLICATION OF TORQUE ON BOLTS ALLOWED IF NUTS NOT ACCESSIBLE

NOTE 3 ALIGN MARKS ON PITMAN ARM AND STEERING GEARBOX FOR PROPER INSTALLATION

NOTE 4 SECURE NUT WITH HAMMER PUNCH ON NUT EDGE TO SHAFT SLOT, MIN DEPTH 3/32 in (2.5 mm)

NOTE 5 USING DEGREASER, CLEAN MATING SURFACES BETWEEN STEERING GEARBOX AND SUPPORT

NOTE 6 NUT MUST BE TIGHTENED WITHOUT ANY AXIAL PLAY BETWEEN PARTS A, B, C, D. LOOSEN NUT SLIGHTLY TO ALLOW INSERTION OF CUTTER PIN

IMPORTANT NOTE: TO AVOID INTERFERENCES POSITION CLAMPS ON LINKS AS SHOWN (±10°)

16204

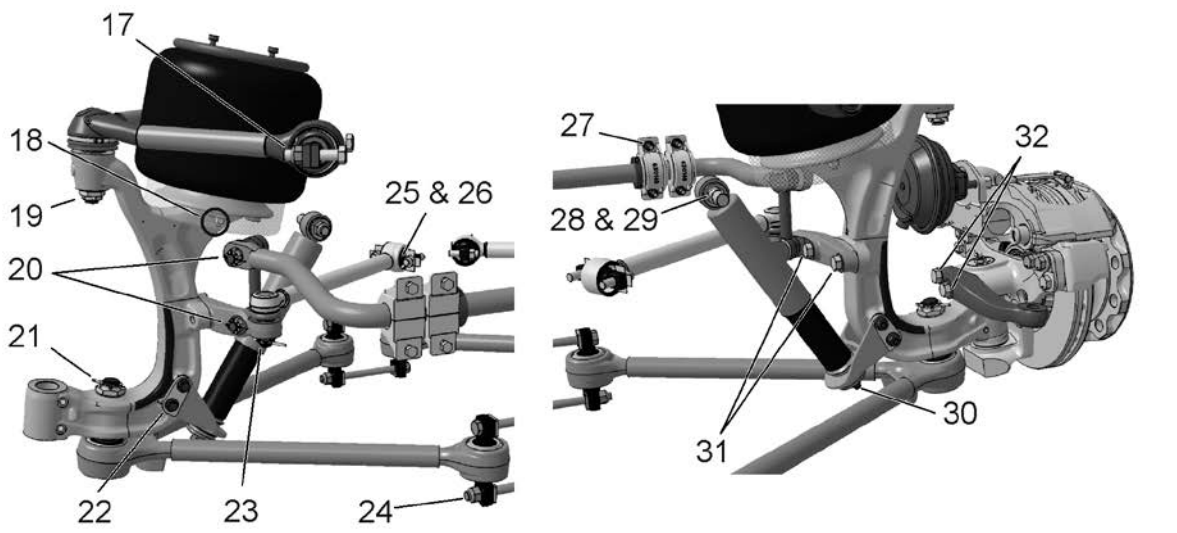

16205

INDEPENDENT FRONT SUSPENSION			
No	DESCRIPTION	QTY	TORQUE (dry)
1	Drag link socket end clamp pinch bolt	2	50-60 lb-ft (68-81 Nm)
2	Drag link ball stud nut to pitman arm	1	245-270 lb-ft (332-366 Nm)
3	Drag link ball stud nut to bell crank	1	245-270 lb-ft (332-366 Nm)
4	Pitman arm to steering gear fixing nut	1	470-570 lb-ft (637-773 Nm)
5	Steering gearbox to mounting bracket bolt	5	365-405 lb-ft (495-549 Nm)
6	Bell crank spindle mounting nut	6	208-254 lb-ft (282-344 Nm)
7	Idler arm spindle mounting nut	6	208-254 lb-ft (282-344 Nm)
8	Tie rod end ball stud nut to idler arm or bell crank	2	150-200 lb-ft (203-271 Nm)
9	Tie rod end clamp pinch bolt	4	50-60 lb-ft (68-81 Nm)
10	Tie rod end ball stud nut to steering arm stud *	2	150-200 lb-ft (203-271 Nm)
11	Relay rod stud nut to idler arm *	1	150-200 lb-ft (203-271 Nm)
12	Relay rod stud nut to bell crank *	1	150-200 lb-ft (203-271 Nm)
13	Hydraulic power cylinder end clamp pinch bolt	1	50-60 lb-ft (68-81 Nm)
14	Hydraulic power cylinder to bracket stud nut*	1	150-200 lb-ft (203-271 Nm)
15	Hydraulic power cylinder to idler arm stud nut*	1	150-200 lb-ft (203-271 Nm)
16	Hydraulic power cylinder end clamp pinch bolt	1	50-60 lb-ft (68-81 Nm)
17	Upper a-arm ball joint	4	230-255 lb-ft (312-346 Nm)
18	Air spring lower stud nut (6 air springs)	2	31-38 lb-ft (42-52 Nm)
19	Upper a-arm central ball joint (castellated hex nut)*	1	210-250 lb-ft (285-339 Nm)
20	Sway bar link, upper and lower ball stud nuts (front suspension)*	2	165-200 lb-ft (224-271 Nm)
21	Lower a-arm central ball joint (castellated nut)*	1	490-540 lb-ft (664-732 Nm)
22	Shock absorber support	4	105-125 lb-ft (142-169 Nm)
23	Torque Rod ball stud nut*	1	150-200 lb-ft (203-271 Nm)
24	Lower a-arm ball joint	4	270-300 lb-ft (366-407 Nm)

25	Torque rod, nut	2	158-193 lb-ft (214-262 Nm)
26	Torque rod, stud	2	90-110 lb-ft (122-149 Nm)
27	Sway bar bushing collar (front suspension)	8	80-100 lb-ft (108-136 Nm)
28	Shock absorber mounting stud nut	1	99-121 lb-ft (134-164 Nm)
29	Shock absorber mounting stud	1	350-400 lb-ft (475-542 Nm)
30	Shock absorber lower mounting pin nut	1	60-75 lb-ft (81-102 Nm)
31	Torque rod lever bolt (M20-2.5)	2	520-575 lb-ft (705-780 Nm)
32	Steering arm bolt (M22-2.5)	2	642-708 lb-ft (870-960 Nm)

* Tighten nut to specified torque, then advance to next aligning cotter pin slot and install a new cotter pin.

NOTE
Apply corrosion-protective compound on exposed threads.

1.3 REAR SUSPENSION

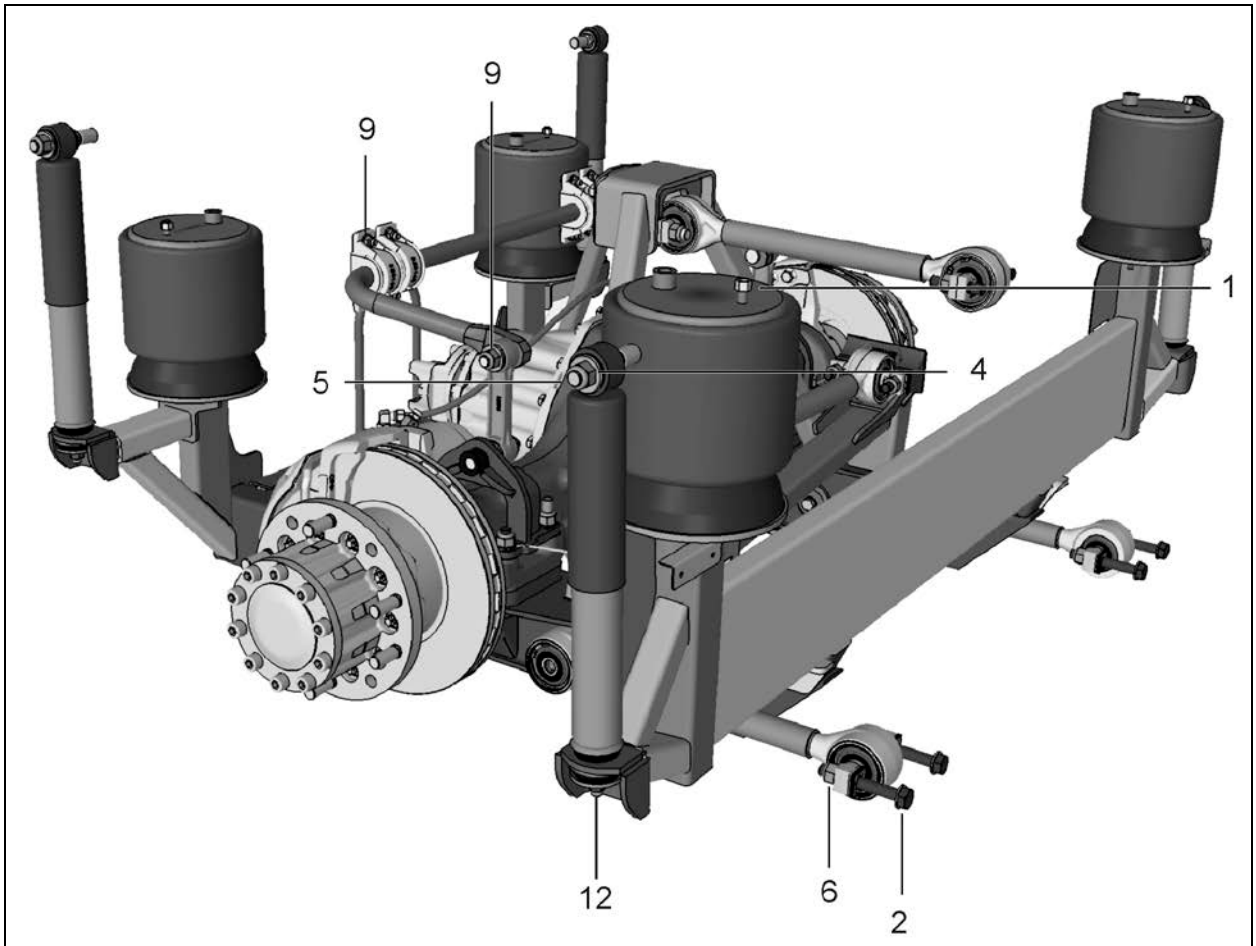

16206: ZF drive axle

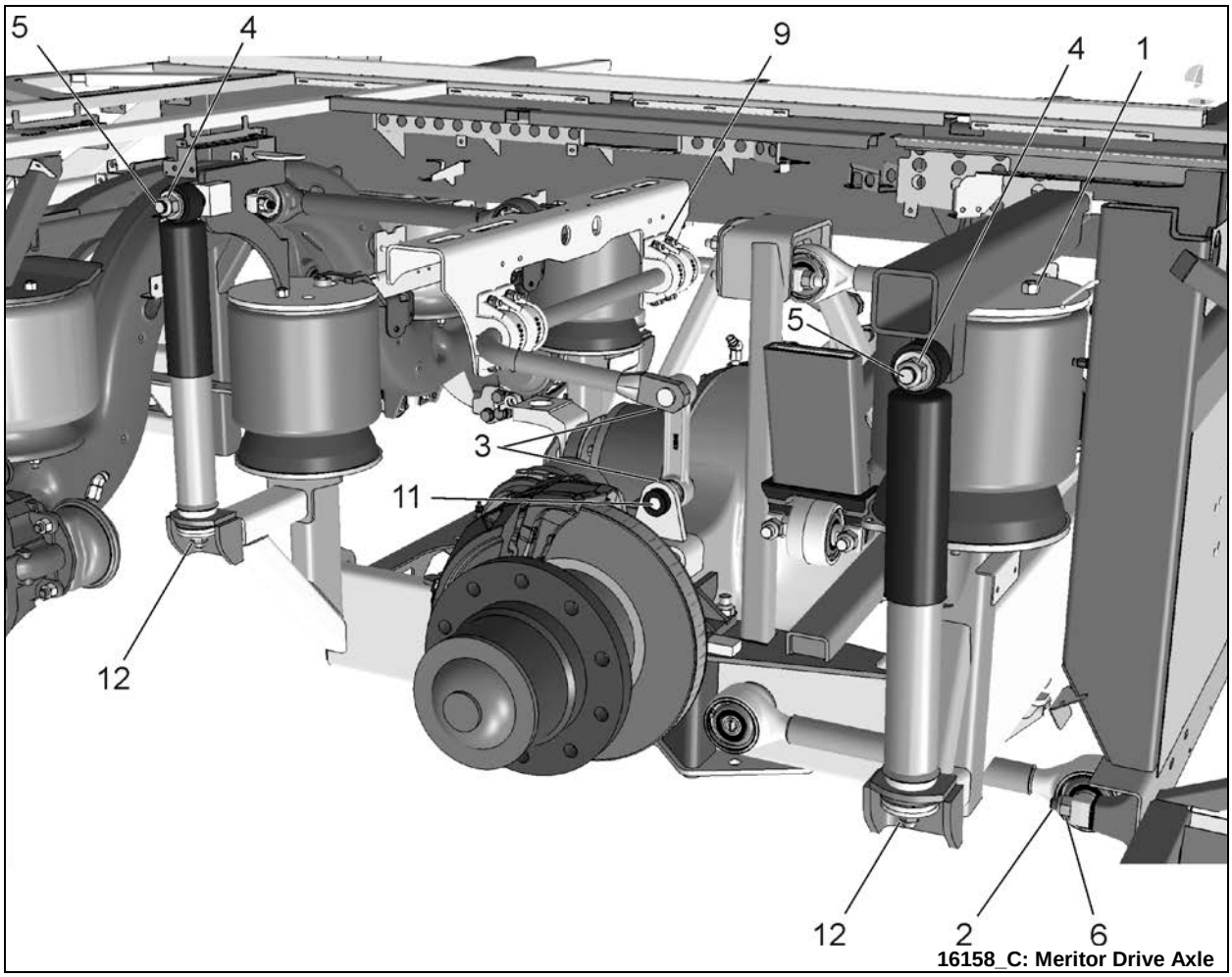

16158_C: Meritor Drive Axle

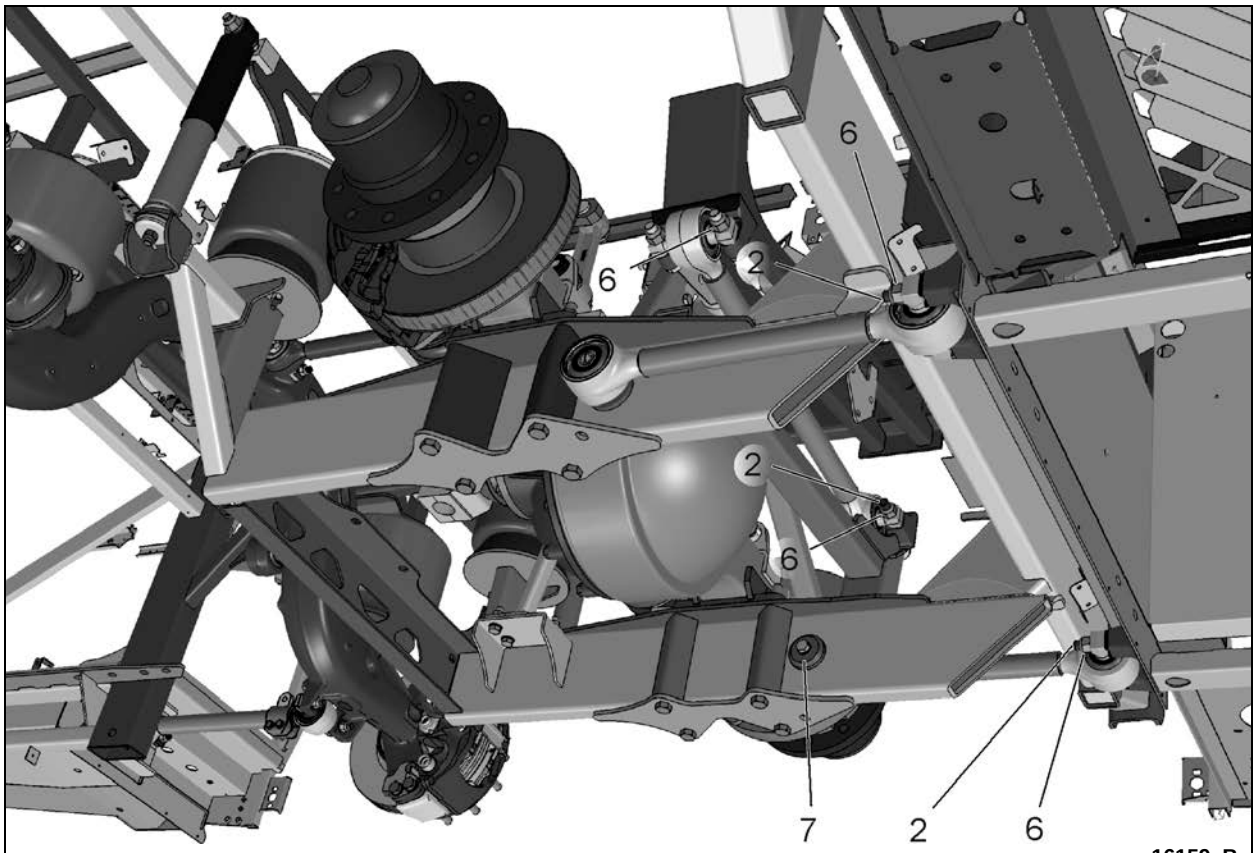

16159_B

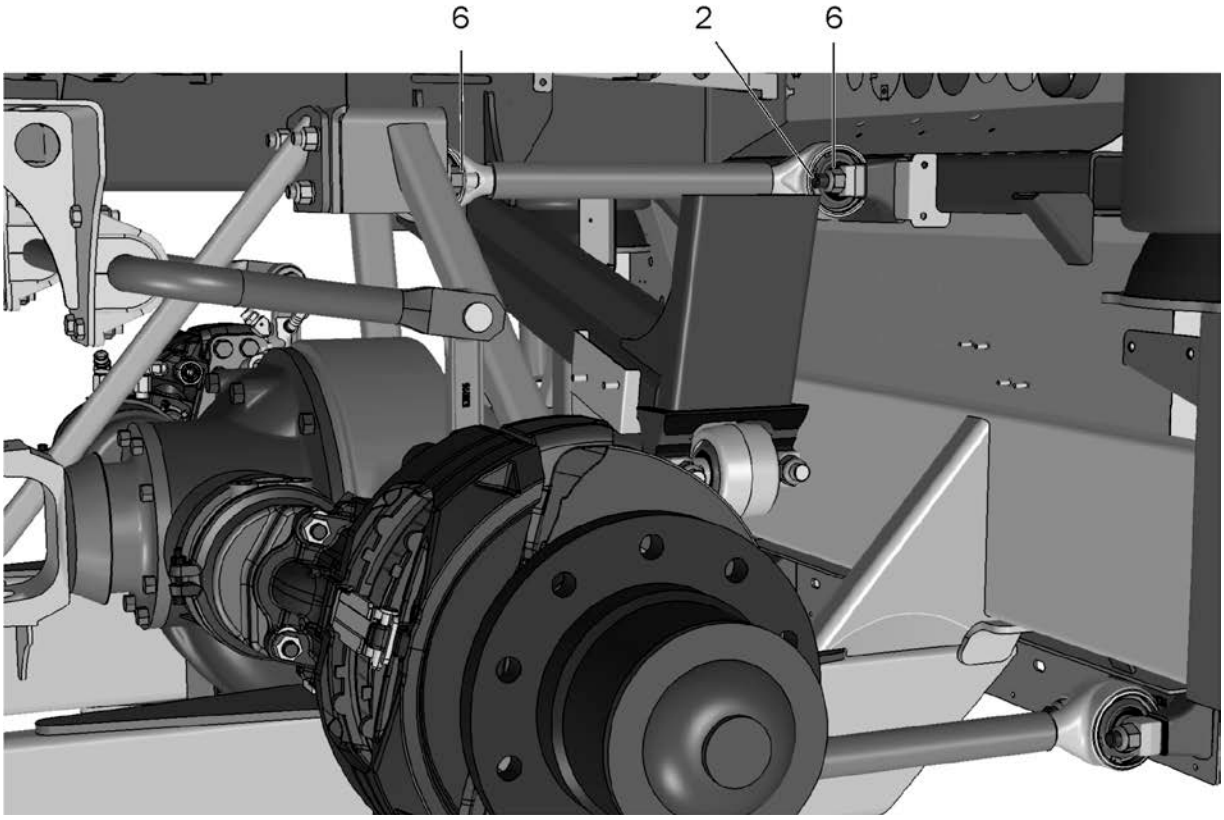

16162_B

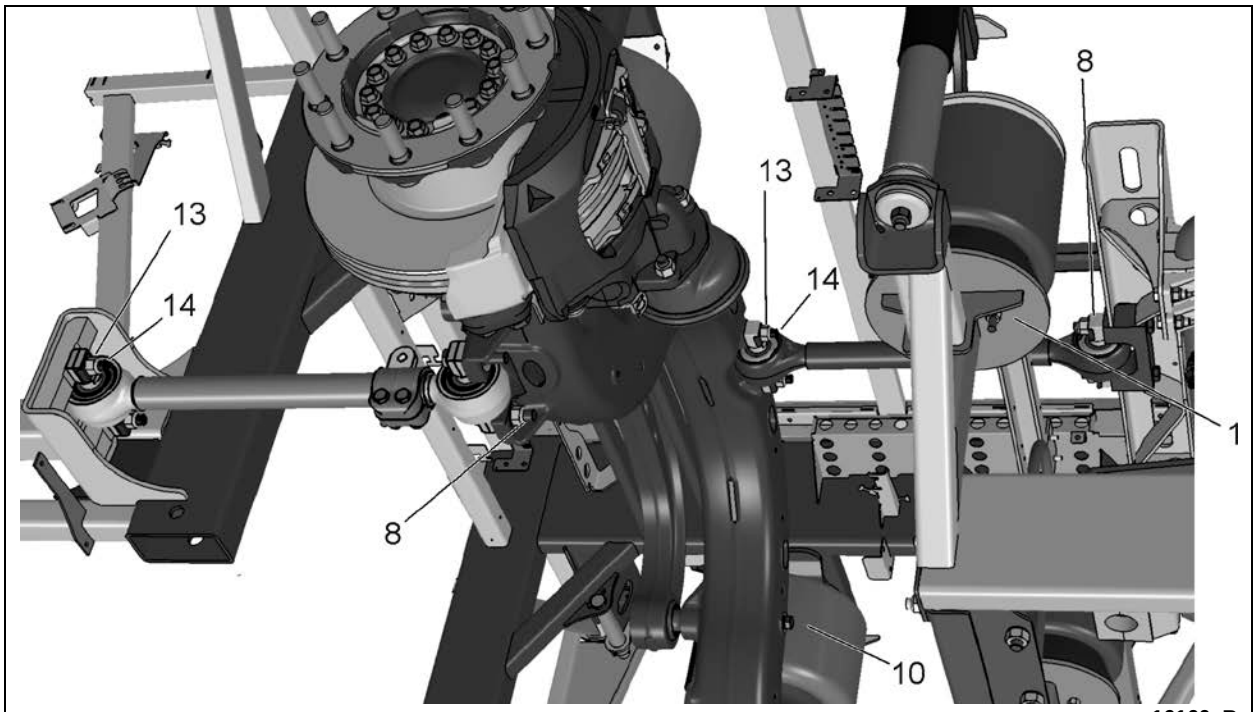

16160_B

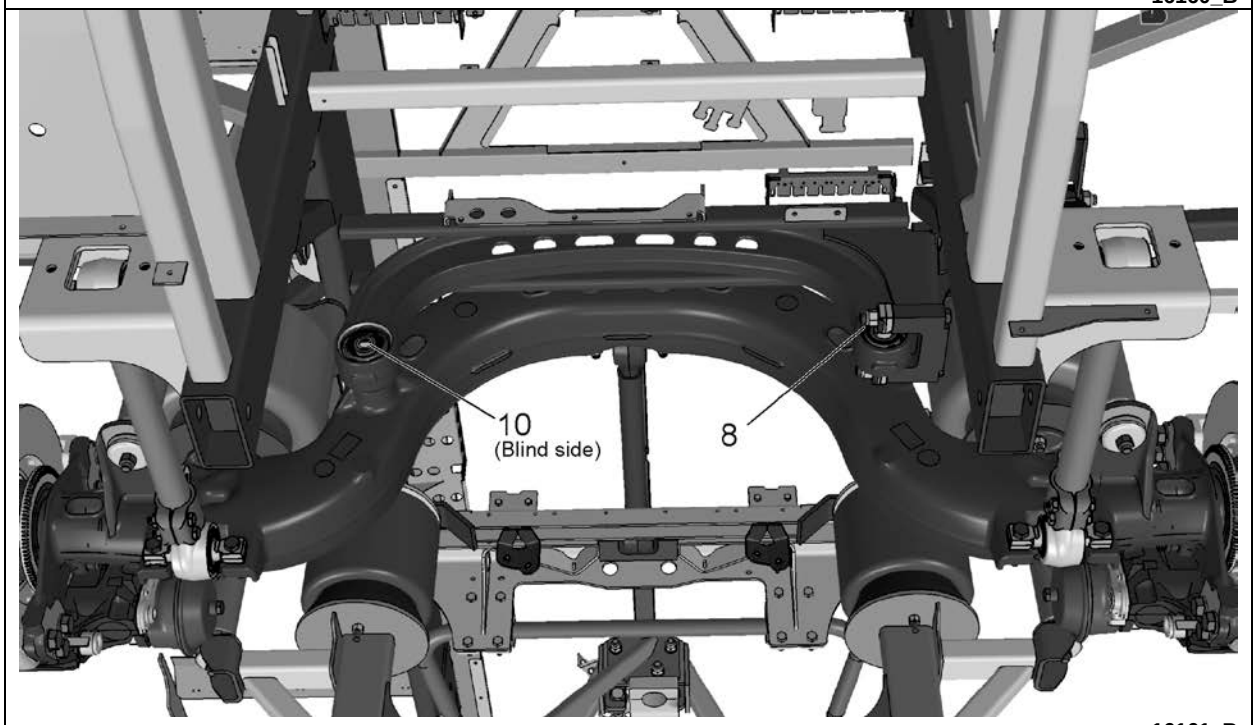

16161_B

REAR SUSPENSION			
No	DESCRIPTION	QTY	TORQUE (dry)
1	Air Spring Upper & Lower Stud Nut	*12*	31-38 lb-ft (42-52 Nm)
2	Drive & Tag Axle Radius Rod stud	*12*	90-110 lb-ft (122-149 Nm)
3	Sway Bar Link Upper & Lower Nut	*4*	99-121 lb-ft (134-164 Nm)

4	Shock Absorber Pin Nut	*6*	99-121 lb-ft (134-164 Nm)
5	Shock Absorber Pin	*6*	350-400 lb-ft (475-542 Nm)
6	Drive axle Radius Rod Nut/bolt	*6*	225-255 lb-ft (305-346 Nm)
7	Drive Axle Longitudinal Radius Rod Retaining Bolt	*2*	185-227 lb-ft (251-308 Nm)
8	Tag Axle Radius Rod Nut	*6*	228-252 lb-ft (309-342 Nm)
9	Sway Bar Bushing Collar Bolt	*8*	80-100 lb-ft (108-136 Nm)
10	Tag Axle Transversal Radius Rod (Casting) Retaining Bolt	*1*	185-227 lb-ft (251-308 Nm)
11	Sway Bar Link Pin Stud	*4*	350-400 lb-ft (475-542 Nm)
12	Shock Absorber Lower Nut	*6*	60-75 lb-ft (81-102 Nm)
13	Tag Axle Radius Rod Nut	*6*	158-193 lb-ft (214-262 Nm)
14	Tag Axle Radius Rod Stud	*6*	90-110 lb-ft (122-149 Nm)

NOTE
Apply corrosion-protective compound on exposed threads.

2 DESCRIPTION

The vehicle is provided with an air suspension system. The system consists of air springs, height control valves, radius rods, sway bars, tripod and shock absorbers (Figure 1 to Figure 7). The system operation is fully automatic and maintains a constant vehicle height regardless of load, or load distribution.

The vehicle can also be equipped with systems such as:

- Front Kneeling + Front High-Buoy;
- Front Kneeling + Full High-Buoy;
- Front Kneeling + Front High-Buoy and Low-Buoy Combination;
- Front Kneeling + Full High-Buoy and Low-Buoy Combination;

For a description of each of these systems, refer to the appropriate heading in this section

3 FRONT I-BEAM AXLE SUSPENSION

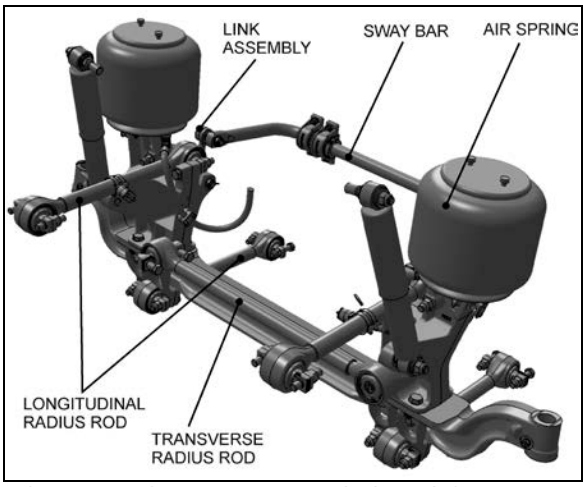

FIGURE 1: FRONT I-BEAM AXLE SUSPENSION 16105

3.1 AIR SPRINGS

The air springs are made from a special compound rubber molded to the proper contour and dimensions. The entire vertical load of the vehicle is supported by these springs. Each of the three axles is provided with air springs that are attached to the subframe and to the axles.

3.1.1 Inspection

1. Check operation of bellows.
2. Visually inspect bellows for evidence of cracks, punctures, deterioration, or chafing. Replace the bellows if any damage is evident.
3. With the primary air system at normal operating pressure (122 - 140 psi (841 - 965 kPa)), coat all suspension air line connections and bellows mounting areas with a water and soap solution. Bubbles will indicate an air leak, and none is permissible. Repair or replace defective parts.

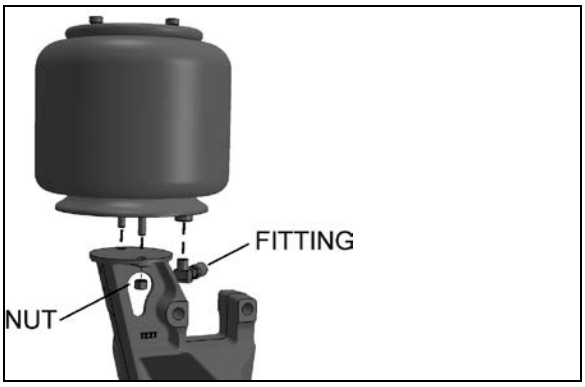

FIGURE 2: AIR SPRING 16052

> ***NOTE***
>
> *If air spring is removed from vehicle, bellows can be lightly inflated and submerged in water to detect any leakage. If any leakage is detected, replace bellows.*

> **WARNING**
>
> To prevent personal injury, do not apply more than 10 psi (69 kPa) of air pressure to the uninstalled air spring.

3.1.2 Removal

> ***NOTE***
>
> *Front suspension air springs can be removed without removing the entire axle assembly.*

1. Safely support vehicle at the recommended body jacking points. To gain access to a given air spring, the corresponding wheel can be removed as follows:
   a) Jack vehicle until the tire clears the ground, and place safety supports underneath body.

CAUTION

Only the recommended jacking points must be used as outlined in Section 18, “Body”.

b) Support the axle with a suitable hydraulic floor jack at the recommended jacking points. Make sure that the measurement between the air spring mounting plates is greater than the normal clearance (normal ride height).

c) Remove wheel.

2. Exhaust compressed air from accessory air tank by opening drain cock under reservoir.
3. Disconnect the height control valve link and pull down the control arm to ensure all air is exhausted from air springs.

NOTE

While performing this step, do not change the height control valve control arm adjustment.

4. Disconnect air line from air spring, remove elbow (if applicable), and cover both the line end and fitting to prevent the entry of foreign matter.
5. Unscrew the two air spring lower mounting nuts.
6. Rotate the air spring counterclockwise to free the upper attachments from the mounting plate.
7. Remove the air springs.

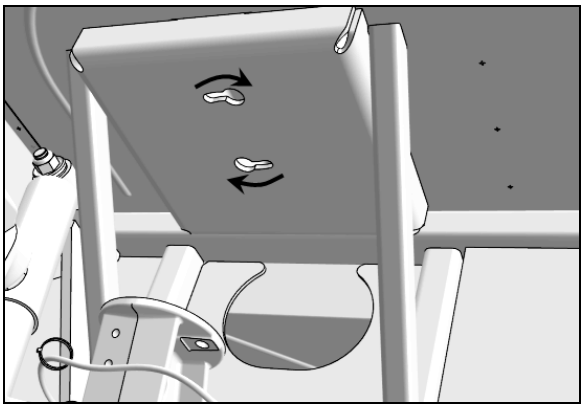

FIGURE 3: AIR SPRING UPPER MOUNTING PLATE

3.1.3 Installation

1. Compress air spring as necessary and position air spring between both the lower and upper mounting plates.
2. Align the upper attachments with holes in the mounting plate. Rotate air spring clockwise.
3. Thread the lower nuts a few turns.

NOTE

To facilitate air spring installation, compress it manually then put a piece of tape over the air line threaded fitting. This prevents air from getting back into the air spring and keeps it compressed, thus enabling to place the air spring in between the mounting plates and greatly easing installation.

4. Tighten and torque the lower stud nuts according to Torque Table under heading Torque Specifications.
5. Install elbow (if applicable), then connect air line.
6. Connect the height control valve link.
7. Build up air pressure in system.

NOTE

To accelerate this operation, air reservoirs can be filled from an exterior air supply connected to the accessory tank fill valve or to the emergency fill valve.

7. Check operation of bellows and with the primary air system at normal operating pressure (122 - 140 psi (841 - 965 kPa)), coat the air line connections and air spring mounting areas with a water and soap solution. Bubbles will indicate an air leak, and none is permissible. Repair or replace defective parts.
8. Reinstall wheel.
9. Remove the hydraulic floor jack from under the axle, then lower vehicle to ground.

3.2 SHOCK ABSORBERS

Double-action, telescoping-type shock absorbers ensure a smooth ride and enhance vehicle stability on the road. All shock absorbers are eye-type mountings. The front and tag axles are each provided with two shock absorbers while the drive axle is provided with four of them.

Shock absorbers are non-adjustable and non-repairable. Maintenance requirements involve replacement of the rubber mounting bushings, and tightening of all shock absorber pins according to Torque Table under heading Torque Specifications when shock absorber

replacement occurs. If a shock absorber becomes inoperative, complete unit must be replaced.

CAUTION

When a shock absorber is found defective, always replace with a new set on affected axle, except if there has been a recent replacement of one unit. The following method will help in determining if both shock absorbers on the same axle have to be replaced.

3.2.1 Inspection

Loosen lower mounting of both shocks, and then carefully attempt to raise and lower the bottom portion of each shock. Note the rate of effort for distance of travel. Replace both shocks if a definite differential rate is found.

The shock must be bench checked in an upright, vertical position. If checked in any other position, air will enter the cylinder tube and make the shock absorber appear defective.

Proceed as follows to check shock absorbers:

1. With the shock absorber in a vertical position (top end up), clamp the bottom mount in a vise.

CAUTION

Do not clamp the reservoir tube or the dust tube.

2. Rotate the dust tube. Notice any binding condition (may be compared with new unit). Binding condition indicates a scored rod. Units with scored rods should be replaced.
3. Fully extend shocks and check for leaks in the seal cover area. Shock fluid is a very thin hydraulic fluid that has a characteristic odor and dark brown tint. A slight trace of shock fluid around the seal cover area is not a cause for replacement (Refer to the SACHS document “Guideline to Evaluate Warranty Claims” annexed at the end of this section before replacing a shock). The shock seal is designed to permit a very slight seepage to lubricate the rod. Units that leak should be replaced.
4. Visually check shock for dents that could cause the shock to bind. Also, check for a bent rod.
5. Extend and collapse shock several times to determine that it has control (resistance) in both rebound and compression.
6. Visually inspect the shock mountings and vehicle mounting for:
   a. Broken mounts;
   b. Extreme bushing wear;
   c. Shifted bushing or sleeve;
   d. Deep cracks in bushing material (shallow surface cracks are normal);
   e. Loose shock absorber pins;
   f. Presence of convex washers, and their position relative to the rubber bushing.

3.2.2 Removal

1. Remove nuts and washers from shock absorbers on upper and lower mounting pins, taking care to identify the inner and outer washers to ease reinstallation. Refer to Figure 4 for details.
2. Remove the shock absorber assembly from pins.
3. Remove the two inner bushings from the shock absorber and discard them.

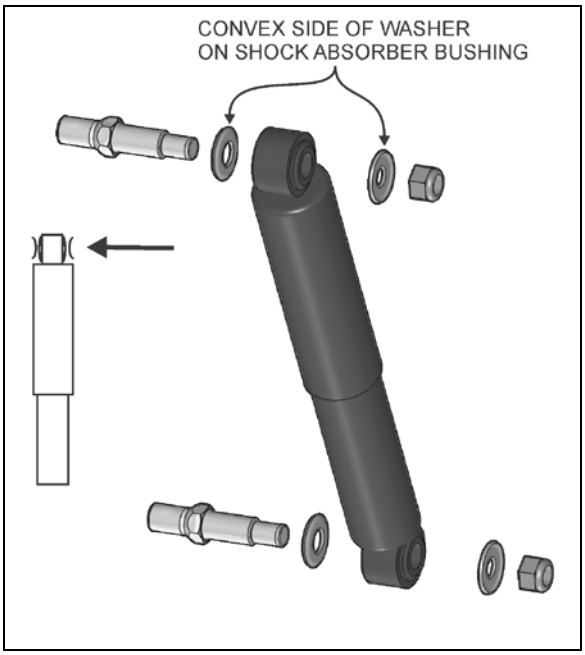

FIGURE 4: SHOCK ABSORBER 16008

3.2.3 Installation

1. Ensure that the shock absorber mounting pins are tight and that the threads are not stripped.
2. Install new rubber mounting bushings on shock absorbers (upper and lower).
3. Place the inner washers (with washer convex side facing the shock absorber rubber bushing) on each shock absorber pin.
4. Install the shock absorber eyes over the mounting pins, then the outer washers (with washer convex side facing the shock absorber rubber bushing) on each shock extremity.

NOTE
If shock absorber pins are removed, they must be reinstalled using "Loctite" (see "Parts Specifications" in this section).

5. Place the lower and upper mounting pin stud nuts and torque according to paragraph 13 Torque Specifications.

3.3 RADIUS RODS

Radius rods are used to secure the axles in the proper transversal and longitudinal positions. Five radius rods are provided on the front I-beam axle suspension (four longitudinal and one transversal). Refer to Figure 1 and Figure 5 for details. These rods transmit both braking and driving forces from the axles to the vehicle body.

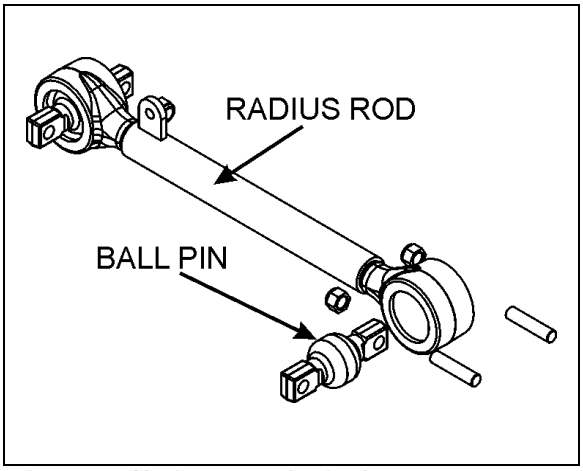

FIGURE 5: TYPICAL RADIUS ROD SETUP 16010

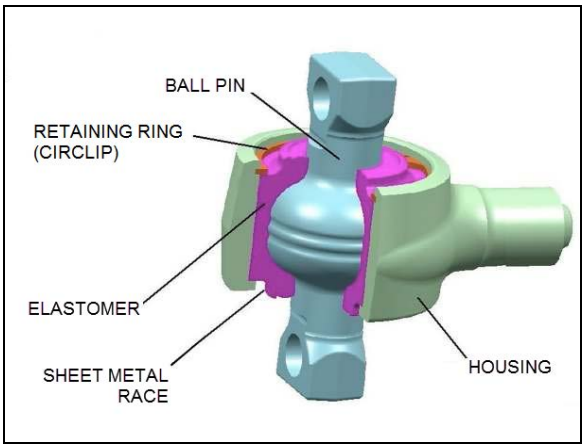

FIGURE 6: BALL PIN JOINT CONSTRUCTION 16186

3.3.1 Inspection

1. Clean all parts thoroughly.
2. Inspect radius rods for distortion and cracks. We recommend the "Magnaflux" process to detect cracks in the radius rod. Any damaged part should be replaced with a new one.

NOTE
New bushings should be used when rods are replaced.

3. The radius rod bushings should be checked periodically for signs of shearing, deterioration, or damage. Any defective part should be replaced with a new one.

Take off the load from the ball joint by lifting the vehicle. Apply a load on the joint in all of the degrees of freedom in an axial, radial, etc. sense with a suitable lever tool. After the load is taken off, the joint has to spring back into its starting position. Free play is not acceptable.

Separation of rubber from ball pin or sheet metal race is permissible up to a third of the circumference.

When the following characteristics are noted, the joint is to be changed:

- Free play between ball pin and housing;
- Radial cracking of the external sheet-metal race (Figure 6)
- Any crack or fracture of a metal part
- Plastic deformation of the sheet metal race
- Loosened bolt
- Broken bolt
- Loss of bolt

- Circlip (retaining ring) detached from groove
- Broken Circlip
- Loss of Circlip
- Incipient crack

If damage to the inner housing contour or the Circlip groove is found during replacement of the molecular bearing, the entire radius rod must be replaced.

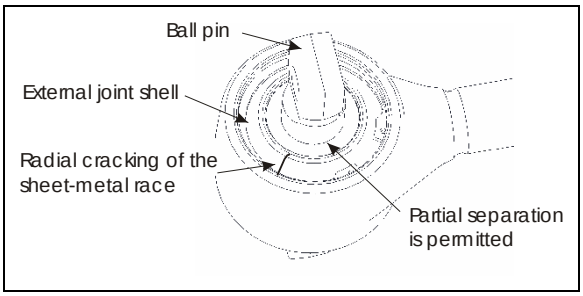

FIGURE 7: BALL PIN BUSHING

3.3.2 Radius Rod Removal

1. Unscrew the nuts (or bolts) at each extremity of the radius rod.
2. Remove the radius rod.

NOTE

One end of the transversal radius rod is fitted with a conical (tapper) pin that will require the use of an air hammer and a pointed 13mm (1/2inch) diameter chisel to remove it from the chassis (after the retaining nut is removed from the rod end). ***Care must be taken not to damage the rod pin threads.***

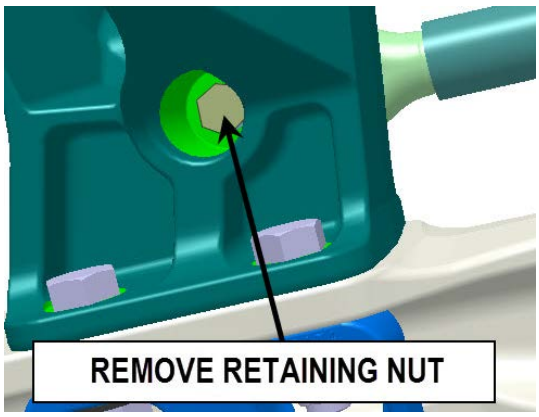

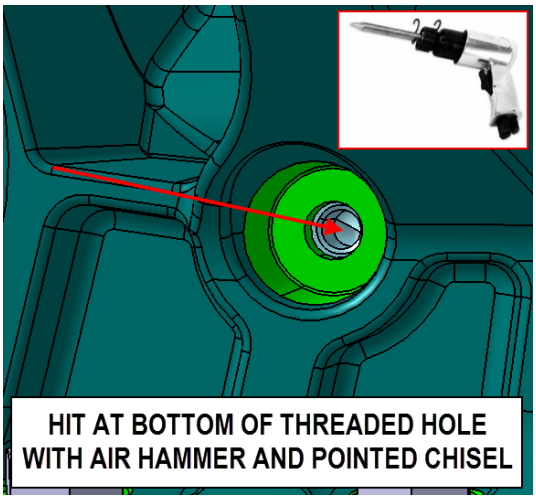

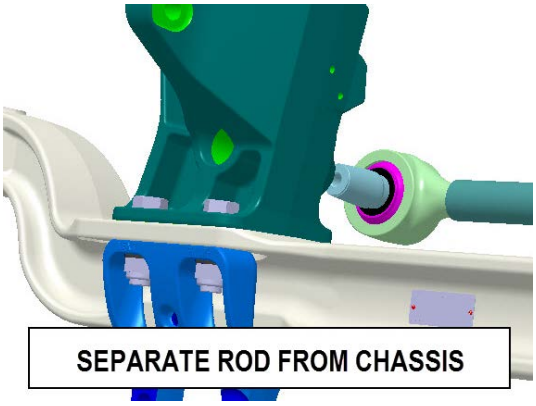

CAUTION

Do not hit the cast parts of the chassis to disengage tapper radius rods; this could lead to cracking and/or deformations of the cast parts.

3.3.3 Stripping Down

Strip down the defective joint by removing the Circlip, and ball pin/bushing assembly.

Clean out housing bore and Circlip groove.

3.3.4 Radius Rod Assembly

The assembly work may be done only by a recognized specialized workshop. Ensure that old and new parts do not get mixed up with each other. It is for this reason that all the old parts are to be scrapped immediately after a joint has been stripped down.

A complete repair set must be used for each joint repaired, i.e. use of only part of a repair set is not permissible.

Execute assembly of the new joint parts in the following sequence:

1. Complete moistening of the contact surface between housing bore and ball pin elastomer through application of grease.

NOTE
Apply the supplied grease, only if you are using a repair kit.

2. Insert ball pin/bushing, assembly. Ensure that the bolt bores are in the correct position in relation to the axis of the tube.
3. Place joint in receiving fixture and mount annular assembly tool on the housing. Then locate Circlip in the housing using axial load with the aid of assembly stamp.
4. Opening of the Circlip is located at 45° to the housing shaft axis. Make sure that the Circlip is perfectly engaged in the housing.

3.3.5 Radius Rod Installation

1. Snug up the nuts (or bolts) and repeat at the other end.
2. Refer to heading *"Suspension Height Adjustment"* later in this section, and set the vehicle to normal ride height.
3. With the vehicle at normal ride height, tighten all radius rod anchor pin nuts or bolts as prescribed in Torque Table 1.

CAUTION
It is extremely important upon reconnection of the rods that the proper clearance height between the axle and body be maintained. Otherwise, the rubber bushings in radius rod ends will become preloaded, thus reducing their life span.

3.4 SWAY BAR

A sway bar is provided on the front axle to increase vehicle stability. It controls lateral motion (swaying movement) of vehicle (Figure 8).

3.4.1 Removal

1. Disconnect the two links from sway bar.
2. Safely support the sway bar. Unbolt the four bushing brackets from subframe.
3. Remove sway bar.

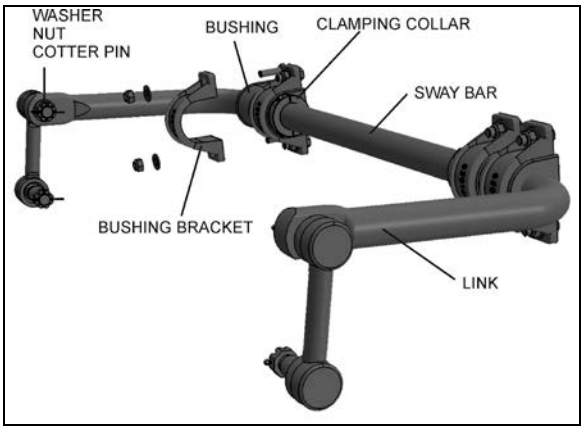

FIGURE 8: SWAY BAR 16028

NOTE
Sway bar bushings are slit to ease their removal.

3.4.2 Installation

1. Loosely install the sway bar.
2. Tighten the eight bushing brackets nuts according to Torque Table 1 under heading Torque Specifications.
3. Tighten sway bar link upper nuts and lower nuts according to Torque Table 1 under heading Torque Specifications.
4. Install a cotter pin on each nut and bend.

4 INDEPENDENT FRONT SUSPENSION (IFS)

This section contains information and specifications unique to the independent front suspension (IFS), including suspension and steering.

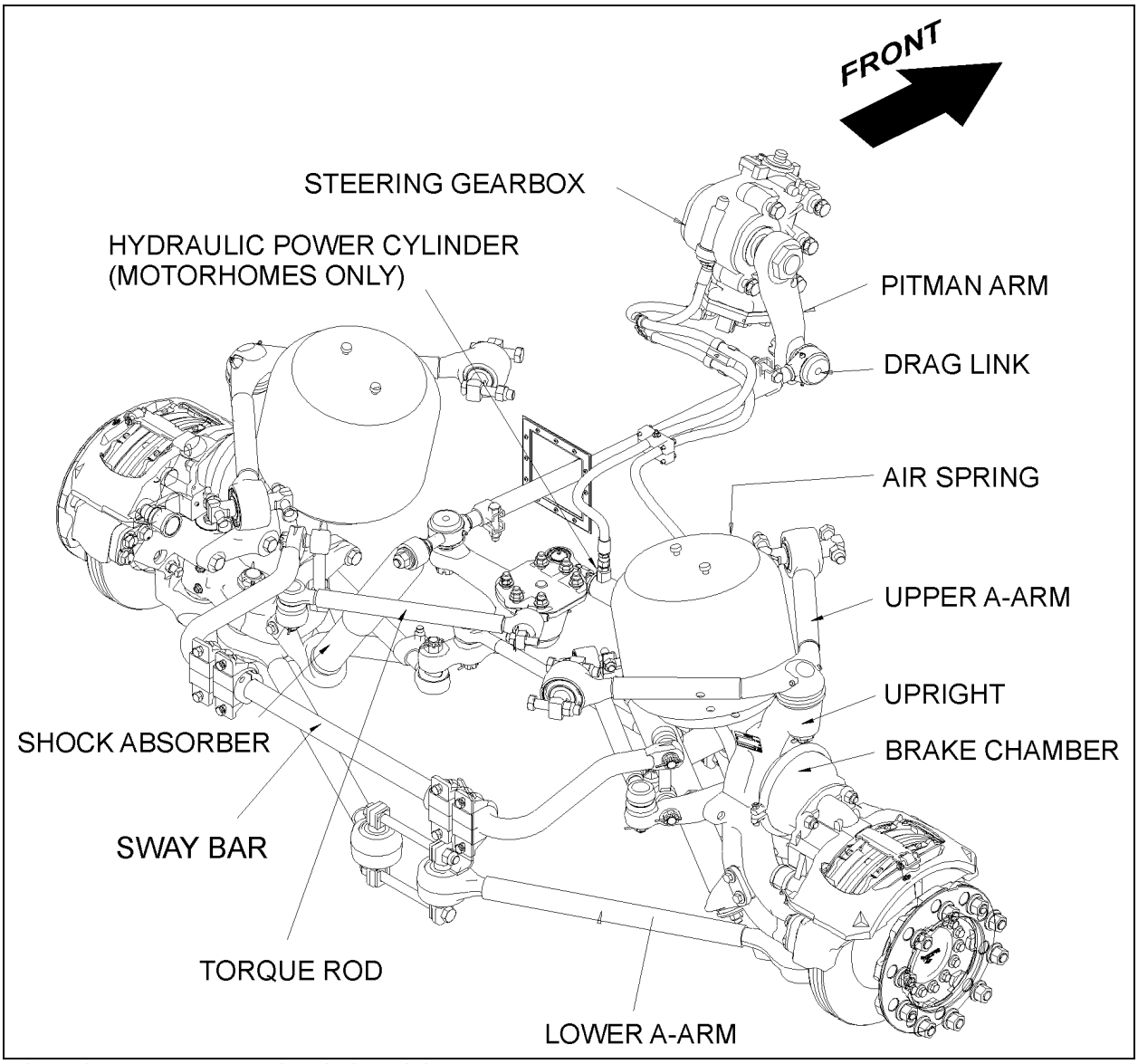

FIGURE 9: INDEPENDENT FRONT SUSPENSION 16124

4.1 STEERING LINKAGE

Turning motion of the steering wheel is transferred by the steering gear and steering linkage to the steering arms at the right and left front wheels. The steering linkage consists of tie rods connected to the bell crank and the steering arm at the left side of the coach, and to the idler arm and steering arm at the right side of the coach. The bell crank and idler arm are connected by a relay rod. A drag link connected to the bell crank and the pitman arm, which is mounted to the steering gear, transfers the turning motion of the steering wheel to the steering arms. On VIP series, a hydraulic power cylinder provides an added source of assistance

and being connected to the R.H. wheel, makes it such that the total steering forces are produced with minimal stress on mechanical linkages.

Lower and upper A-arms are widely spaced. They are mounted on ball joints. Torque rods prevent rotation of the uprights around the lower and upper ball joints.

If the steering linkage is bent, twisted or worn, steering action of the coach will be seriously affected. Any time steering linkage components are replaced or adjusted, steering geometry and front wheel alignment must be checked as explained in this section.

Turning Angle

The maximum turning angle is set mechanically through the two steering stop screws installed on the swivel assembly. The turning angle mechanical stop is factory adjusted to accommodate the chassis design, and therefore, does not require adjustment on new vehicles.

However, turning angle should be checked and adjusted hydraulically, if necessary, any time a component of the steering system is repaired, disassembled or adjusted.

Turning angles are as follows:

Exterior: 49.5° ± 0.5°

Interior: 58° ± 0.5°

Before checking the turning angle, be sure the front end is properly aligned as described under paragraph FRONT END ALIGNMENT in this section.

To check steering maximum turning angle, proceed with the following method:

1. Lift the vehicle using the axles lifting points. Suspension must be at normal ride height.

2. Check if front tires rub against the frame or if the steering gear has been serviced.

3. While performing a full left and right turn, check for proper position of the tie rod end clamp bolt and nut and drag link end clamps in order to avoid clamps interfering with close parts. Refer to FIGURE 17 & FIGURE 18 for location and positioning of clamp bolts and nuts. Reposition if required.

CAUTION

Clamp bolts are either in a vertical or horizontal position. Reinstall clamp bolts exactly as they were before removal as they might interfere with other components.

NOTE

Prior to hydraulic steering limiter adjustment, verify vehicle wheel alignment, and ensure that oil level is adequate and that air bleeding is done.

4. If necessary readjust hydraulic steering limiter. Refer to these manuals annexed to the Maintenance Manual, Section 14: STEERING:

   - ZF-SERVOCOM Types 8090-8099 Single and Dual-Circuit Versions Repair Manual.

   - ZF-SERVOCOM Types 8090, 8095, 8097 and 8098 Design, Operation' Maintenance, Inspection.

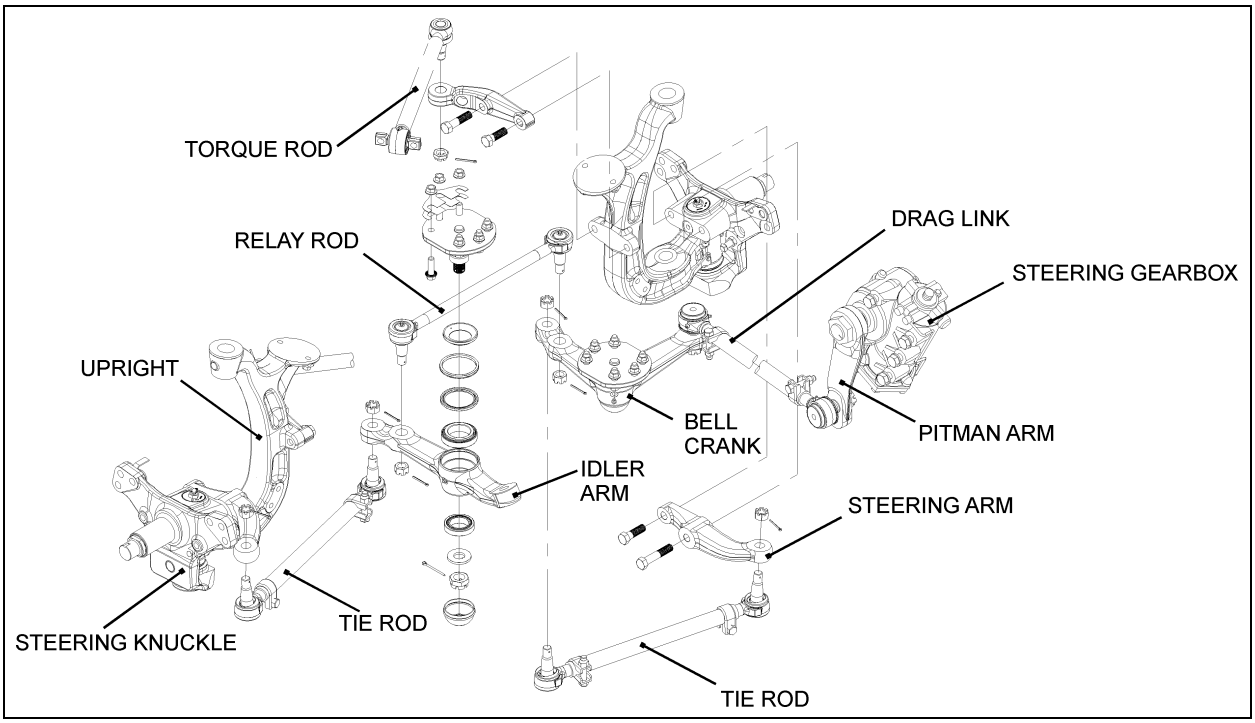

FIGURE 10: IFS STEERING LINKAGE OVERVIEW

4.2 STEERING LINKAGE INSTALLATION SEQUENCE

NOTE
Whenever a steering linkage component has been removed and replaced, check steering geometry and front end alignment as directed in this Section. Check to insure that all stud nuts and mounting bolts and nuts have been tightened to prescribed torque.

1. Position front wheels in straight ahead position.
2. Align the steering gearbox input shaft marks.
3. Afterwards, the pitman arm should be adjusted with output shaft and pitman arm reference marks aligned (for proper tightening torque, refer to Torque Table 2).

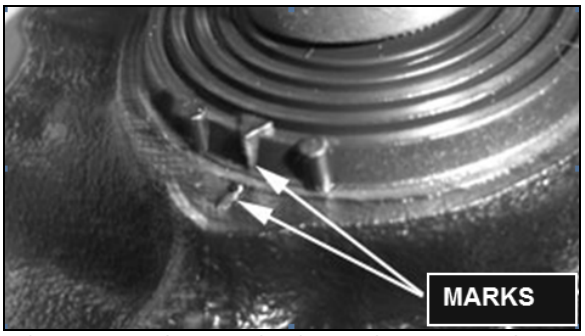

FIGURE 11: STEERING GEARBOX INPUT SHAFT MARKS

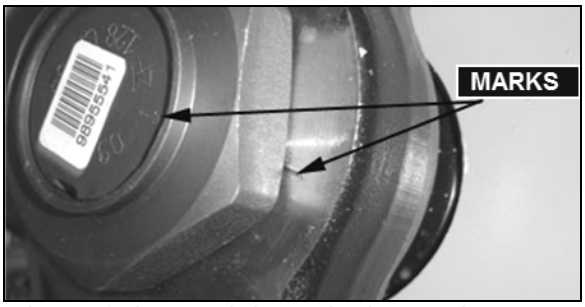

FIGURE 12: STEERING GEARBOX OUTPUT SHAFT AND PITMAN ARM MARKS ALIGNED

4. Locate centerline of vehicle then install relay rod in boss at steering bell crank and idler arm. Align center of relay rod with centerline of vehicle.
5. Install drag link to pitman arm and adjust opposite end of drag link to fit ball stud hole in bell crank.
6. Install tie rods then adjust toe-in as described in "Front End Alignment" in this section (for proper tightening torque, refer to Torque Table 2).

4.3 PITMAN ARM

4.3.1 Removal

1. Remove cotter pin, nut and washer from drag link ball stud at pitman arm.
2. Disconnect drag link from pitman arm, using jaw style pullers (pressure screw type).

WARNING
Always wear approved eye protection when operating pullers.

CAUTION
Do not drive pitman arm on or off sector gear shaft as this can damage the steering gear.

CAUTION
Heating of components to aid in disassembly is not allowed because it has a detrimental effect on axle components and steering linkage.

3. Remove pitman arm fixing nut.
4. Check the radial position of the pitman arm in relation to the sector shaft prior removal of pitman arm.
5. Locate the reference marks to the arm and shaft to ensure correct alignment at reassembly.
6. Use a puller to remove pitman arm.

4.3.2 Installation

1. Position pitman arm on sector gear shaft with reference marks aligned.
2. Install fixing nut. Tighten nut (dry) as per Torque Table 2.

NOTE
Use a new nut if the previously removed nut was punched.

CAUTION

Lock nut with sector shaft using a punch mark into the groove, minimum depth 3/32 inch (2.5mm) (see Figure 13).

FIGURE 13: FIXING NUT PUNCH MARK 16098

3. Connect drag link to pitman arm. Ball stud and taper bore must be clean and free of grease. Install washers. Tighten nut (dry) as per Torque Table 2. Advance nut to next alignment cotter pin slot and install a new cotter pin.

4.4 DRAG LINK

Drag link assembly consists of three parts; a drag link and two end assemblies. Both end assemblies are identical and they are retained on the drag link with a clamp bolt and nut.

Stud nuts at the pitman arm and bell crank ends of the drag link must be kept tight or hole at ball stud end of drag link and hole in pitman arm may become enlarged as a result of excessive looseness. Subsequent tightening of stud nuts may draw studs too far into holes and dust cover parts may become damaged which can result in component failure.

Drag link end sockets are equipped with lubrication fittings and should be lubricated as directed in "Lubrication Fittings" in this section.

NOTE

The drag link nominal length is 41 17/32 inch (1055 mm) measured from the center of one ball socket to the other. Nominal length is given only for preliminary adjustment.

4.4.1 Adjustment

It should not be necessary to alter the length of the drag link except when a new link is installed or when removable end assembly has been replaced. If drag link adjustment is necessary, proceed as follows:

1. Position front wheels in straight ahead position.
2. Center steering gear as previously explained in "Steering Linkage Installation Sequence".
3. Remove cotter pin, nut and stud from drag link at bell crank. Locate centerline of vehicle and center of relay rod. With center of relay rod aligned with centerline of vehicle, loosen clamp bolt at socket end (bell crank end) of drag link and adjust length of socket end assembly to fit in boss of bell crank.

NOTE

Do not change position of pitman arm.

4. Install stud with nut and torque to proper torque. Ball stud and taper bore must be clean and free of grease. Align nut with cotter pin slot (tighten) and install a new cotter pin.
5. Torque mounting clamp bolt nut to prescribed torque, then test the adjustment. Front wheels should turn from full right to full left end of stroke without noticeable binding at drag link ends.

CAUTION

Clamp bolts are either in a vertical or horizontal position. Reinstall clamp bolts exactly as they were before removal as they might interfere with other components.

4.5 BELL CRANK AND IDLER ARM

Bell crank and idler arm are equipped with one lubrication fitting and should be lubricated as directed in "Lubrication Fittings" in this section.

4.5.1 Bell Crank or Idler Arm Removal

NOTE

Use a piece of wire to support loosen end of relay rod and tie rod in order to prevent placing an excessive load on opposite socket end.

Bell crank: Disconnect drag link, tie rod and relay rod from bell crank by removing cotter pins and nuts from ball studs. Separate socket assemblies from the bell crank.

Idler arm: Remove cotter pins and nuts from ball studs connecting relay rod, tie rod and hydraulic power cylinder to idler arm. Separate socket assemblies from idler arm.

Remove nuts from bolts attaching bell crank or idler arm mounting spindle to vehicle subframe. Remove bell crank or idler arm mounting spindle.

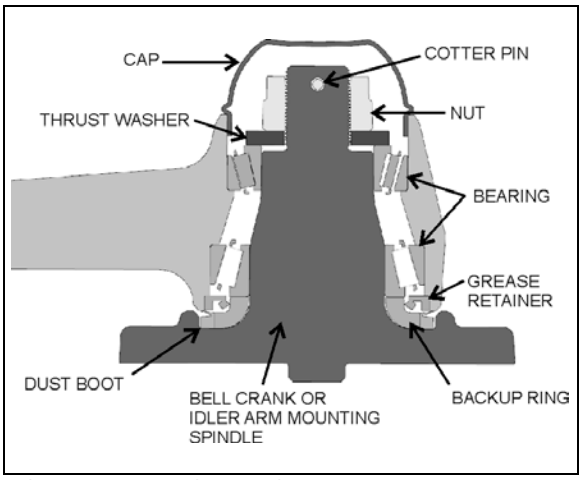

FIGURE 14: BELL CRANK OR IDLER ARM HUB

4.5.2 Bell crank or Idler Arm Hub Disassembly

1. Remove adjacent link assemblies from bell crank or idler arm as previously described.
2. Remove the cap (Figure 14).
3. Remove the cotter pin, nut and thrust washer. Remove bearings, grease retainer, backup ring and the bell crank or idler arm from its mounting spindle (Figure 14).

4.5.3 Bell Crank or Idler Arm Hub Reassembly

NOTE
For bearing installation use tool Prevost # 110684.

NOTE
Install grease retainer according to Figure 14. Grease must be able to exit the bell crank or idler arm mechanism. For grease retainer installation use tool Prevost # 110683.

NOTE
Apply grease on bearings before installation.

1. Clean parts thoroughly with degreaser.
2. Insert the small bearing outer race into appropriate bore (done on a press).

3. Insert the large bearing outer race into appropriate bore (done on a press).
4. Insert the large bearing into outer race and then, add grease retainer.

5. Apply good quality lithium grease (#680752) on backup ring and dust boot.

6. Install backup ring and dust boot on bell crank or idler arm spindle.
7. Apply a thin layer of grease on spindle shaft.
8. Install bell crank or idler arm onto its mounting spindle, while holding the bell crank or idler arm, slide on the small bearing assembly, thrust washer and secure using nut.

9. Tighten nut.

TORQUE:130 lb-ft (176 Nm)

10. Rotate assembly 3 turns in each direction.

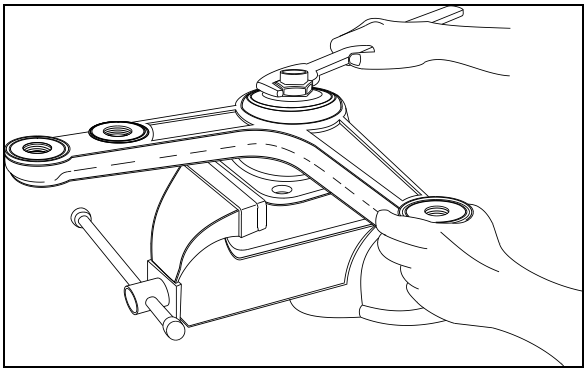

FIGURE 15: BELL CRANK 16044

11. Unscrew nut until bell crank or idler arm starts to turn with the application of 1 to 3 lbs force load as shown on Figure 16.
12. Check for loose bearings by applying an up and down load on bell crank or idler lever. The lever is not supposed to move in the vertical axis direction.

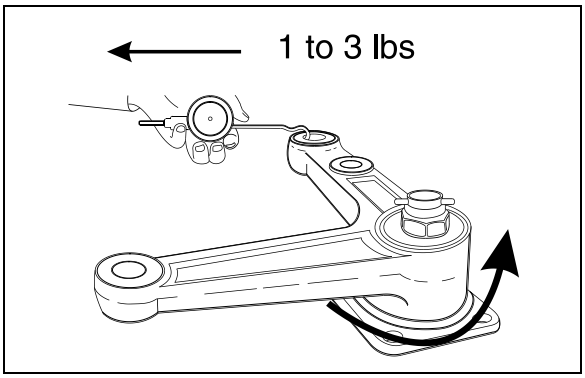

FIGURE 16: BELL CRANK 16045

13. Align nut with cotter pin slot (tighten) and install a new cotter pin.

NOTE
Bend cotter pin around the nut. Do not bend the cotter pin in the direction of the cap as it may interfere with the cap.

14. Install the cap.
15. **Bell crank:** Install drag link, tie rod and relay rod as directed herein under each specific subject.
16. **Idler arm:** Install hydraulic power cylinder, tie rod and relay rod as directed herein under each specific subject.
17. Adjust turning angle as previously directed under paragraph "**Turning Angle**" and check front end alignment as specified under heading “Front End Alignment".

4.6 RELAY ROD

Relay rod ends are equipped with lubrication fittings and should be lubricated as directed in “Lubrication Fittings” in this section.

NOTE
The relay rod is crimped in place and it is not possible to remove and replace the ball joint socket end assemblies.

4.6.1 Replacement

1. Remove cotter pins from bell crank and idler arm end of relay rod. Loosen nuts flush with end of studs.
2. Use a puller or place a sledge hammer behind the adjacent part to absorb shocks. Strike the studs with a brass hammer to loosen end assemblies.
3. Remove stud nuts then remove relay rod.
4. Position new relay rod studs into bell crank and idler arm then tap stud ends with a brass hammer to seat tapered surfaces. Ball stud and taper bore must be clean and free of grease.
5. Install stud nuts. Tighten nuts to prescribed torque (refer to Torque Table 2). Align cotter pin slot (tighten) and install a new cotter pin.

4.7 TIE RODS

Tie rod ends are connected to the bell crank and left steering arm, and to the idler arm and right steering arm. Each tie rod assembly consists of three parts; a tube and two socket end assemblies. The tie rod ends are threaded into the tube and secured with clamp bolts. Right and left hand threads are provided to ease toe-in adjustment. Tie rod assemblies are inter-changeable from the right to the left side of the coach.

Tie rod end sockets require periodic lubrication and inspection to see that ball studs are tight. Replace socket ends when there is excessive up and down motion, lost motion or end play at ball end of stud.

1. Periodically check bolt nut for tightness.
2. Inspect tie rod for bent condition and inspect tube for damaged threads. If tie rod is bent or threads are damaged, replace the assembly.
3. Lubricate tie rod end fittings as directed in "Lubrication Fittings" in this section.

4.7.1 Removal

1. Remove cotter pins and stud nuts which attach tie rod socket ends to bell crank and left steering arm (or idler arm) and right steering arm.

2. Remove tie rod ball stud by tapping on steering arm and bell crank or idler arm with brass hammer, while using a sledge hammer to absorb shocks.

NOTE
If tie rod end assemblies are damaged in any way, they must be replaced

4.7.2 Installation

1. Install socket end assemblies on tie rod. Be sure both ends are threaded an equal distance into the tube.
2. Make sure threads on stud and in stud nut are clean and not damaged.
3. Position ball studs (socket ends of tie rod) in holes in steering arm and bell crank or idler arm. Ball stud and taper bore must be clean and free of grease. Install a ball stud nut on each stud and tighten firmly.
4. Torque stud nuts to prescribed torque (refer to Torque Table 2). Align cotter pin slot (tighten) and install a new cotter pin.

NOTE
Adjust toe-in as directed under heading "Toe-In Adjustment" in this section.

5. Make sure tie rod ends are properly aligned with ball studs, and then torque tie rod end clamp bolts to prescribed torque (refer to Torque Table 2).

⚠ **CAUTION**
Reinstall tie rod clamp as per FIGURE 17 & FIGURE 18 as they might interfere with other components.

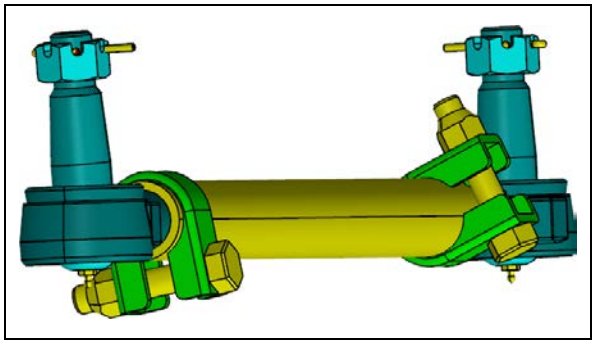

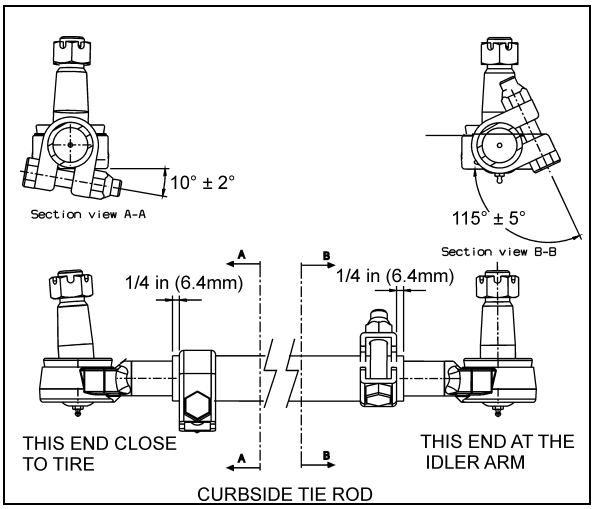

FIGURE 17: CURBSIDE TIE ROD - CLAMPS POSITION
16199

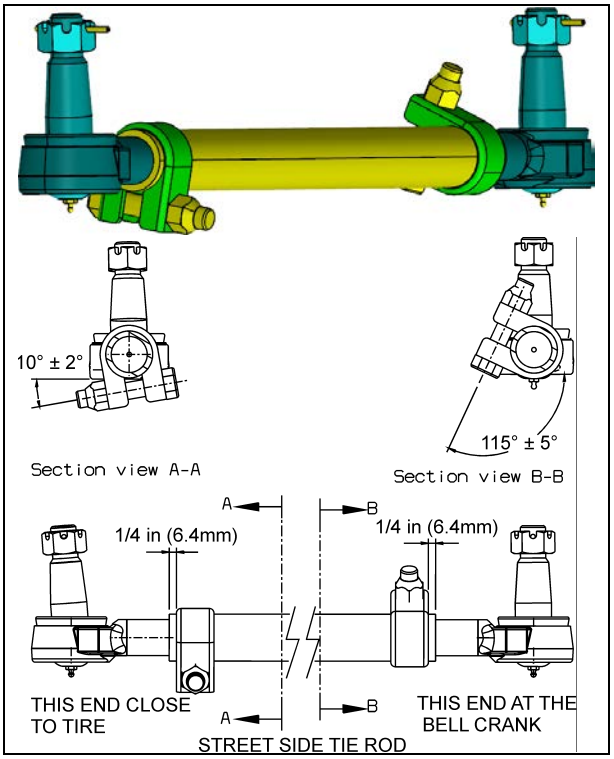

FIGURE 18: STREET SIDE TIE ROD - CLAMPS POSITION
16200

NOTE
If tie rod is not properly aligned with stud, binding will result.

4.8 STEERING ARMS

The left and right wheel steering arms are secured to a steering knuckle at one end and to a tie rod at the other end.

4.8.1 Removal

1. Remove wheel as directed in Section 13, "Wheel, Hubs and Tires" of the maintenance manual.
2. Remove cotter pin and nut from stud securing tie rod to steering arm. Remove ball stud from steering arm by tapping on arm with a hammer, placing a sledge hammer underneath steering arm to absorb shocks.
3. Remove bolts securing steering arm to steering knuckle assembly. Remove steering arm from steering knuckle.

4.8.2 Installation

1. Install steering arm onto steering knuckle.
2. Torque steering arm to steering knuckle fixing bolts. Torque bolt to prescribed torque (refer to Torque Table 2).
3. Position tie rod ball stud in steering arm and tap with a brass hammer to seat ball stud in steering arm. Ball stud and taper bore must be clean and free of grease. Install nut on stud. Torque nut to prescribed torque (refer to Torque Table 2. Tighten nut to nearest cotter pin slot and install a new cotter pin.
4. Install wheel as directed in Section 13, "Wheel, Hubs and Tires" under paragraph "Installation" of the maintenance manual.

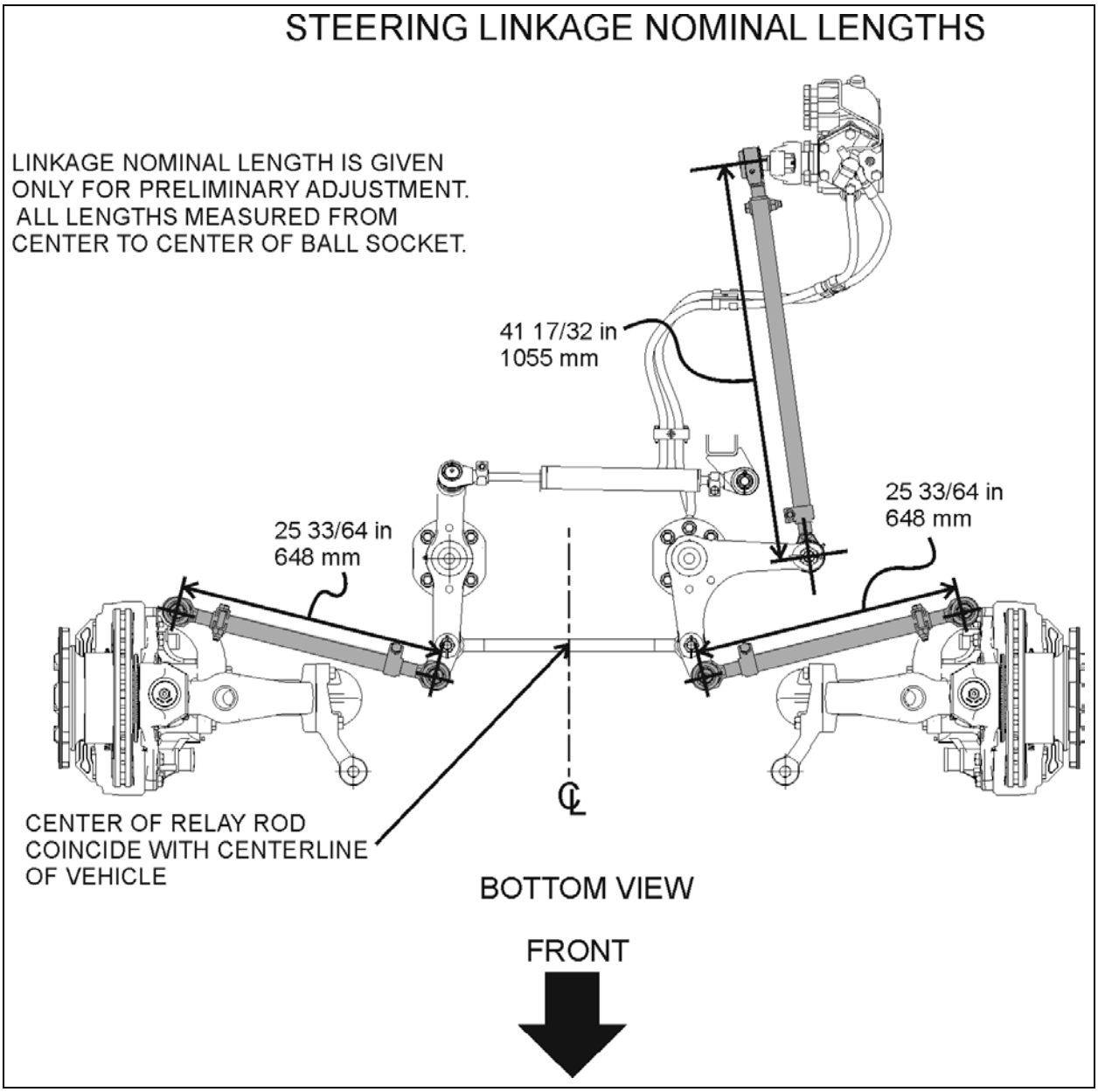

FIGURE 19: STEERING LINKAGE NOMINAL LENGTHS 16202

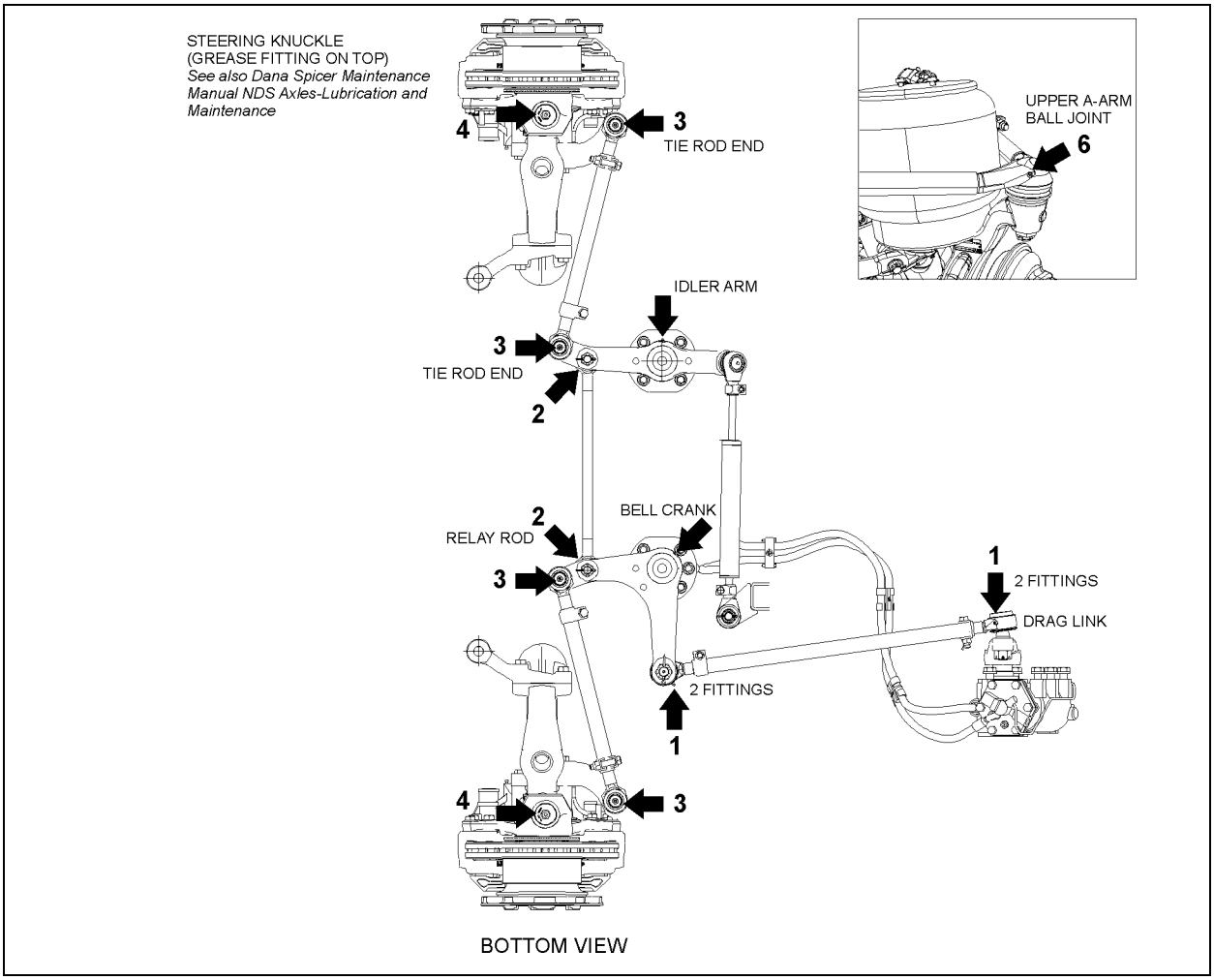

FIGURE 20: LUBRICATION FITTINGS LOCATION 16046

4.9 LUBRICATION FITTINGS

All lubrication fittings must be clean before applying lubricant. Also, always be sure equipment used in applying lubricant is clean. Every precaution should be taken to prevent entry of dirt, grit, lint or other foreign matter into lubricant containers. Replace fitting when become broken or damaged.

Re-charge ball joint until grease can be seen escaping from socket. On ball joints fitted with a rubber boot, do not add to much grease as the rubber boot might expand and rupture.

Intervals of application given in the following paragraphs are recommended for normal service. More frequent intervals may be applied under severe operating conditions. In selecting proper lubricants, supplier reputation must be considered. The supplier must be responsible for product quality. Figure 20 shows approximate location of steering lubrication fittings.

MAINTENANCE

(1) **Drag Link Ends:** Lubricate at four fittings, two at each end of link, every 6,250 miles (10 000 km) with good quality lithium-base grease NLGI No. 2 (Shell Retinax LX or equivalent).

(2) **Relay Rod Ends:** Lubricate at two fittings, one at each end of rod, every 6,250 miles (10 000 km) with good quality lithium-base grease NLGI No. 2 (Shell Retinax LX or equivalent).

(3) **Tie Rod Ends:** Lubricate at four fittings, one at each end of both tie rods, every 6,250 miles (10 000 km) with good quality lithium-base grease NLGI No. 2 (Shell Retinax LX or equivalent).

(4) **Steering Knuckle (swivel assembly):** Refer to DANA SPICER MAINTENANCE MANUAL NDS AXLES Lubrication and Maintenance" annexed at the end of section 10.

(5) **Idler Arm and Bell Crank:** Lubricate at two fittings, one on the idler arm and the other on the crank bell, every 6,250 miles (10 000 km) with good quality lithium-base grease NLGI No. 2 (Shell Retinax LX or equivalent). Apply grease gun pressure to the fitting until lubricant appears at the top seal.

(6) **Upper A-Arm Ball Joint:** Lubricate at fitting until you see some grease on the relief valve nearby, every 6,250 miles (10 000 km) with good quality lithium-base grease NLGI No. 2 (Shell Retinax LX or equivalent).

4.10 BALL JOINTS – GENERAL RECOMMENDATIONS

Visual Inspection

- Visually inspect for missing or damages grease fittings and replace if required.
- Check ball joint connection for missing cotter pins.
- Check for looseness in the ball/socket assembly.

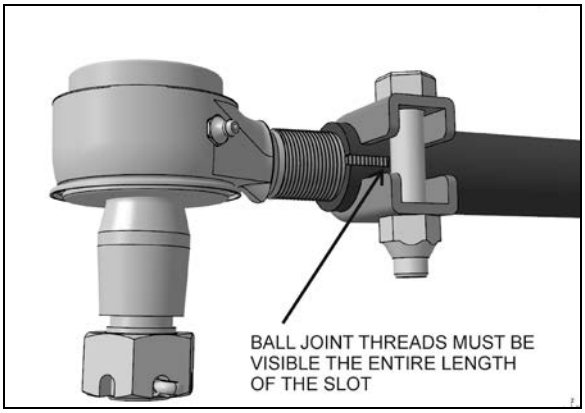

FIGURE 21: ADEQUATE CLAMPING CONDITION

For adequate clamping, the ball joint threads must be visible the entire length of the tube slot. If not, the drag link must be adjusted or replaced. It is either the wrong size, or improper adjustment was used to compensate for another problem (e.g. bent steering arm).

Damaged sealing boots, salt and climatic conditions can cause loss of the corrosion protection coating applied at time of manufacturing. To prevent corrosion from forming around the ball pin, remove the old grease bead and assure sufficient grease is applied to purge the old grease and fill the joint and dust seal (if applicable).

Good quality lithium-base mineral grease NLGI No. 2 like Shell Retinax LX is recommended.

4.11 FRONT-END ALIGNMENT

Proper front end alignment must be maintained to insure ease of steering and provide satisfactory tire life. When making front end alignment inspections, the vehicle must be level and empty with the full weight of the vehicle on the wheels.

Front end alignment inspections fall into two groups: regular service inspections performed at periodic intervals, and inspections to determine the extent of damage after a collision or severe service.

Regular service inspections concern toe-in, camber and caster.

Any variation from the specified alignment will indicate either a need for adjustment or a more thorough inspection to determine if parts replacement is required.

WARNING

During alignment, both camber and caster among other angles are adjusted. When adjusting these, we install or remove shims at the IFS lower A-arms. After performing alignment, make sure that the following is done:

- Installing a new lock nut after all shims are finalized.
- Torque replaced nuts as per Torque Table 2.
- Installing a longer bolt if less than 2 threads are remaining after the nut.
- Using a torque seal, leave a mark on the nut for future visual inspection.

4.11.1 Alignment Terminology

Wheel Camber: Camber is the number of degrees the top of the wheel is tilted inward or outward from a true vertical (Figure 26).

Wheel Toe-In: a slight forward convergence given to the wheels of motor vehicles to improve steering and equalize tire wear
(D minus E, Figure 26).

Kingpin Inclination: The inclination of the kingpin from vertical toward the center of the vehicle at the top and outward at the bottom
(B, Figure 26).

Front Axle Caster: The inclination of the kingpin from vertical in the fore and aft direction
(C, Figure 26).

4.11.2 Front End Inspection

Before checking front end alignment, make the following inspection:

1. Check that the vehicle is at normal ride height (see paragraph "8. Suspension Height Adjustment").
2. Check the tires for proper inflation.
3. Check wheel installation and run-out.
4. Check wheel bearing adjustment.
5. Check tie rods and drag link ends for looseness.
6. Check kingpins for looseness.
7. Check if the length of the torque rod is 21 17/64" (540 mm) (FIGURE 19). Check if the length of the relay rod is 23 19/64" (592 mm).

4.11.3 Front Wheel Camber

Positive camber is the outward inclination of the wheels at the top, negative or reverse camber is the inward inclination of the wheels at the top. Camber variations may be caused by wear at the wheel bearings, wheel spindle bushings, or bent suspension parts.

Check camber, with an accurate gauge. If camber is incorrect, check suspension parts for wear and replace worn parts. If wear is not perceptible, suspension parts may be bent or lower A-arm may be improperly shimmed.

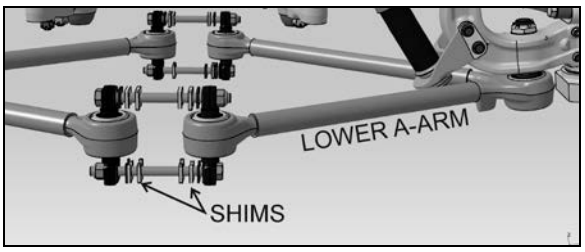

FIGURE 22: SHIMS AT THE LOWER A-ARMS

Check kingpin inclination. If kingpin inclination is incorrect, readjust the camber and check kingpin inclination again.

NOTE
Camber is more important than kingpin inclination, so adjust camber and verify kingpin inclination.

Shim the lower A-arm to adjust camber (Figure 22 & FIGURE 25). If the kingpin inclination is incorrect, the wheel kingpin assembly may be bent and therefore should be replaced.

Excessive positive camber results in irregular wear of the tires at the outer shoulders. Negative or reverse camber causes wear at the inner shoulders.

NOTE
Shim only the lower suspension arm to adjust the front wheel camber.

CAUTION
Once the perfect shim combination is achieved, always install new Stover nuts because the self-locking effect is lost after tightening and loosening of the nut. It is recommended to punch marks to detect loosening of the nuts during future visual inspections.

4.11.4 Front Wheel Toe-In

Toe-in is measured from the center of the tire treads. Measurements at the front and rear of the tires must be made at the same height from the floor. Incorrect toe-in results in excessive tire wear and steering instability with a tendency to wander.

Toe-In Check

1. Check the camber adjustment and adjust if necessary.
2. Hoist the front of the vehicle and spin the wheels marking the centerline of the tire treads.
3. Place the wheels in the straight ahead position and lower the vehicle to rest on the floor.
4. Roll the vehicle ahead several feet. This removes any slack caused by looseness in the wheel bearings or steering connections.

5. Check the distance between the tire centerlines at the front and rear of the front tires. These two measurements must be made at the same height above the floor. The front measurement must be 3/32 ±1/32 of an inch less than the rear measurement.

Toe-In Adjustment

1. Loosen the tie rod clamp bolts.
2. Using a pipe wrench, turn the tie rod tubes to obtain the toe-in measurement specified in step 5 under paragraph "Toe-in Check" (Figure 26).
3. Tighten the tie rod clamp bolts and recheck toe-in.
4. Check that the angular relationship of the pitman arm to the steering gear is as shown in Figure 23.

NOTE
Use only tie rods to adjust toe-in.

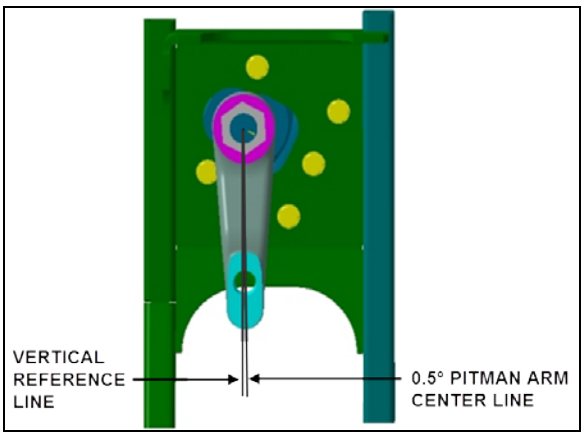

FIGURE 23: IFS PITMAN ARM ALIGNMENT 14056

4.11.5 Front Wheel Caster

Positive caster is the inclination of the top of the kingpins toward the rear of the vehicle. Negative or reverse caster is the inclination of the kingpins toward the front of the vehicle. This vehicle is designed with positive caster. The purpose of caster is to provide steering stability by keeping the wheels in a straight ahead position.

Caster variations may be caused by bent upper suspension A-arm, lower suspension A-arm, or kingpin housing. Caster should be adjusted with shims. Precision instruments should be used to measure caster. Shim bell crank and idler arm to adjust caster (Figure 26).

Variations from the specified caster will affect steering stability, cause wandering, wheel shimmy, and reduce steer re-centering when pulling out of curves.

4.11.6 Major Damage

If the suspension has sustained major damage, it may be necessary to shim the bell crank and the idler arm to avoid the bump steer or roll steer. Moreover refer to paragraph "Front End Alignment".

4.11.7 Alignment Specifications

See FIGURE 25 & Figure 26.

NOTE
On Independent Front Suspension, caster on right wheel must be equal or greater than caster on left wheel, with a maximum difference of 0.3°.

Use static wheel alignment systems which work with angle measurements only, such as Josam or Hunter systems.

H3-45 VIP
INDEPENDENT FRONT SUSPENSION

Load	Minimum value		Nominal value		Maximum value	
	Non-converted	Converted	Non-converted	Converted	Non-converted	Converted
Right camber	0.20°	-0.20°	0.30°	0°	0.50°	0.20°
Left camber	0.20°	-0.20°	0.30°	0°	0.50°	0.20°
Right caster	2.55°		2.8°		3.05°	
Left caster	2.55°		2.8°		3.05°	
Total toe	0.02°	0.04°	0.04°	0.06°	0.06°	0.08°

H3-45 Coaches WITH INDEPENDENT FRONT SUSPENSION			
	Minimum value	**Nominal value**	**Maximum value**
Right camber	0.0°	0.150°	0.30°
Left camber	0.0°	0.150°	0.30°
Right caster	2.35°	2.6°	2.85°
Left caster	2.35°	2.6°	2.85°
Total toe-in	0.04°	0.06°	0.08°

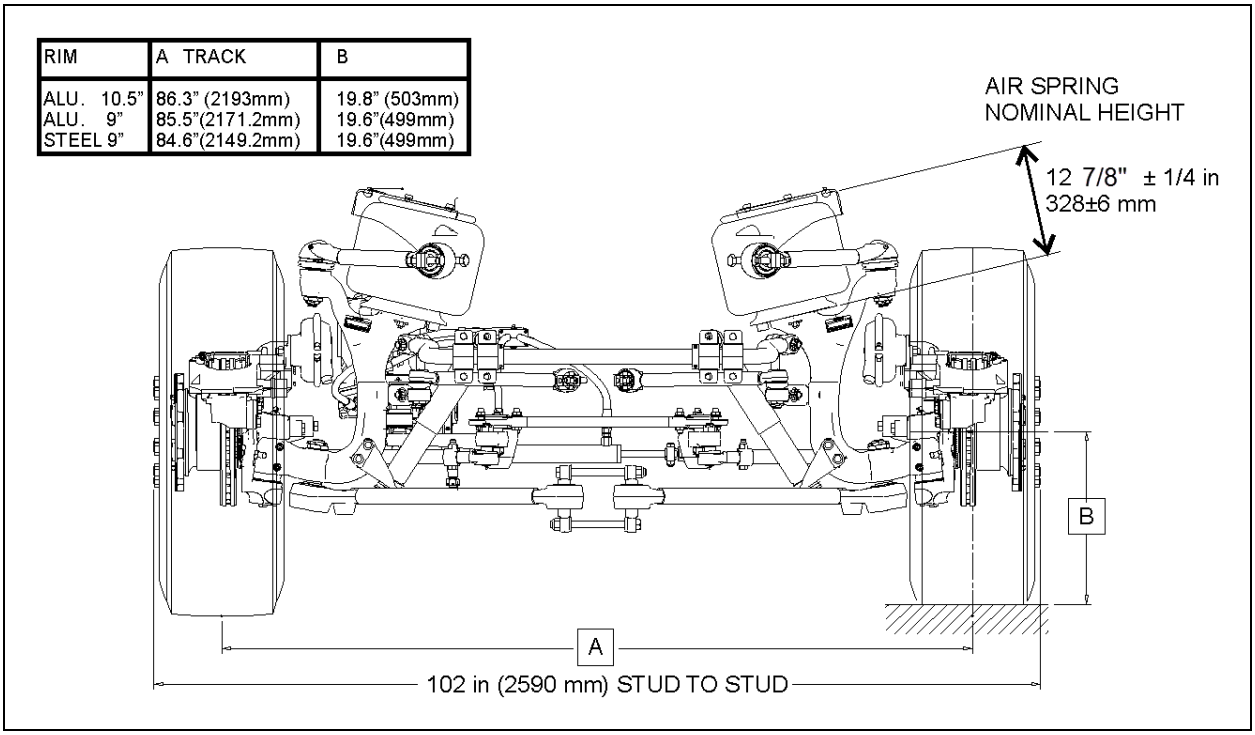

FIGURE 24: IFS NOMINAL DIMENSIONS

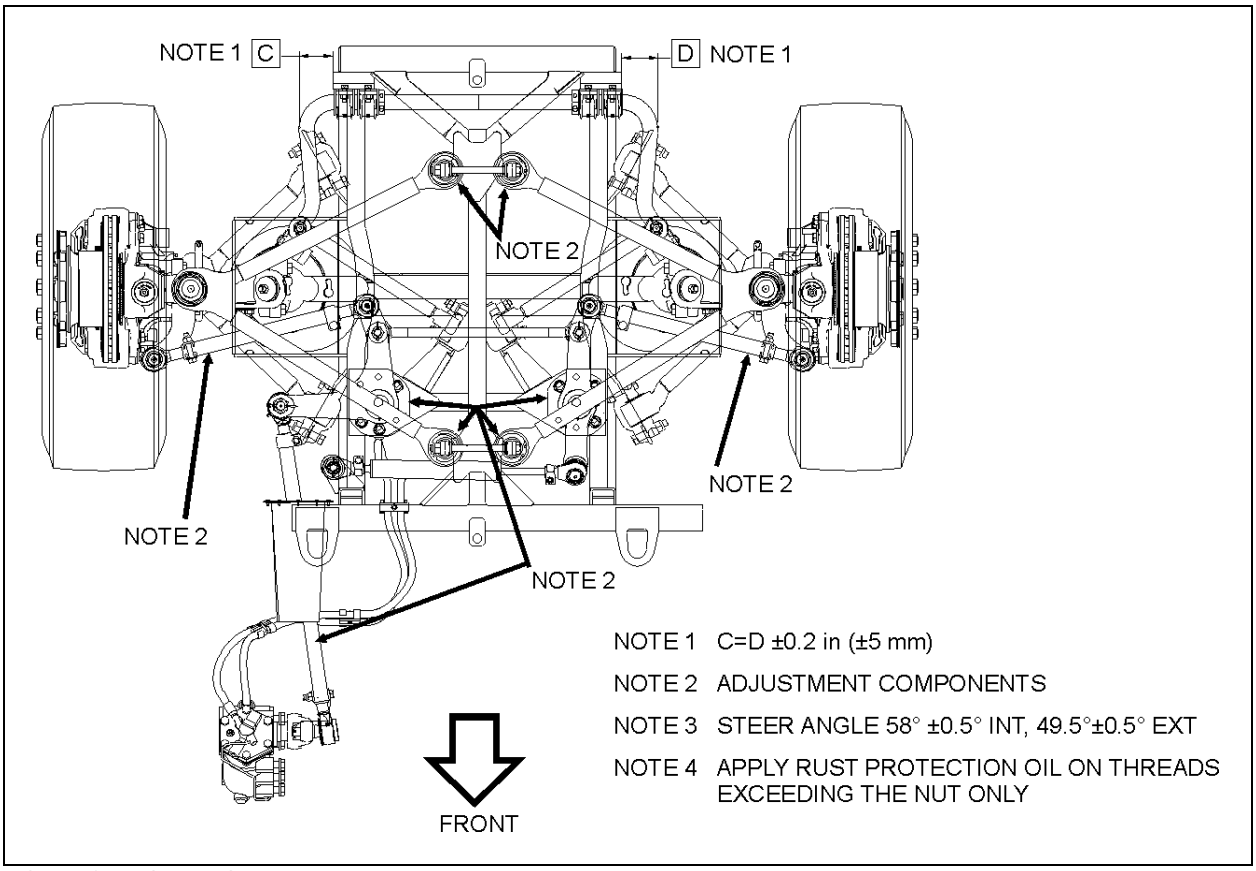

FIGURE 25: IFS ADJUSTMENT

Note 2 indicates where adjustment may be performed if needed when proceeding to IFS ALIGNMENT

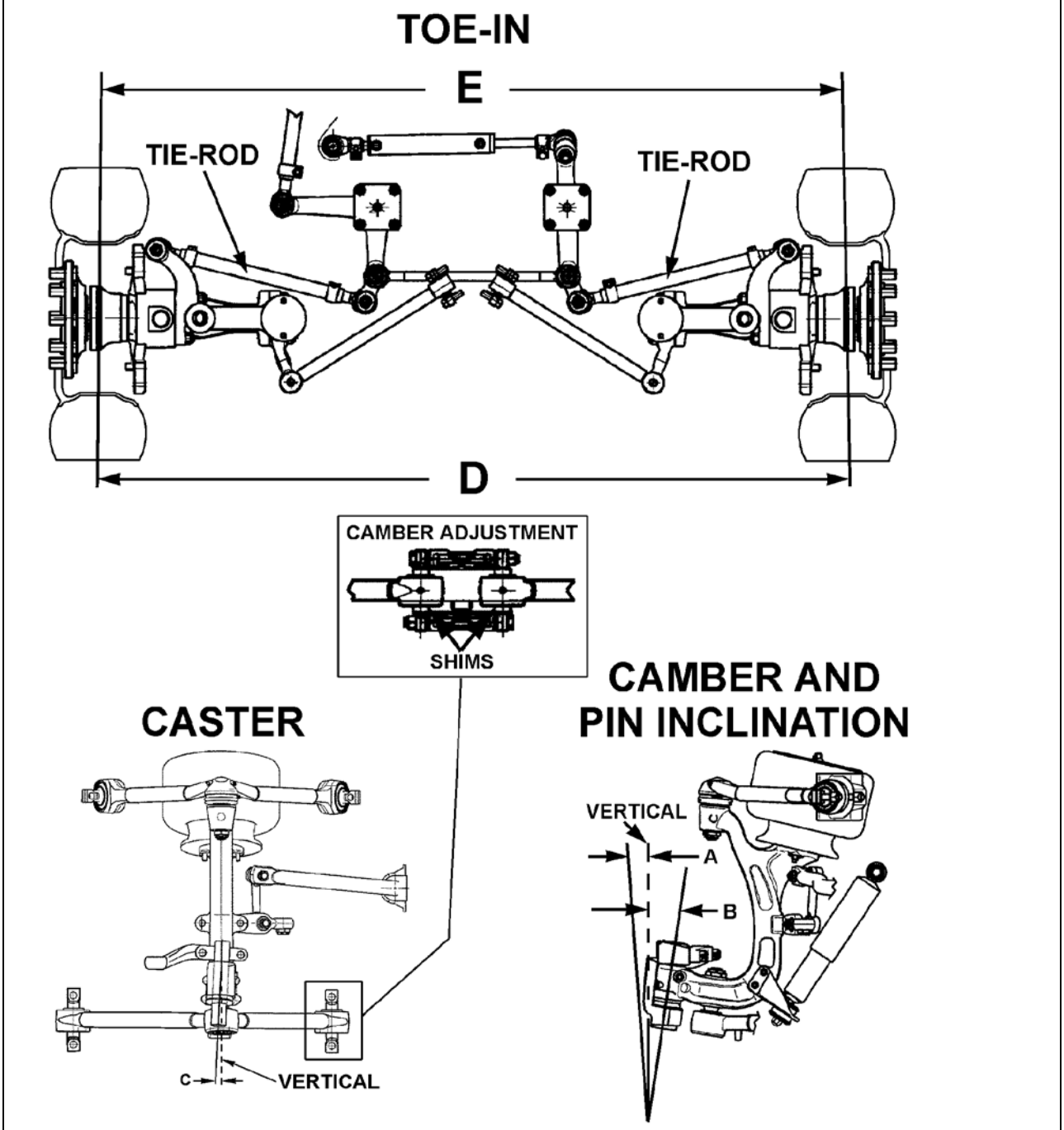

A	WHEEL CAMBER
B	KINGPIN INCLINATION
C	CASTER
D-E	TOE-IN

FIGURE 26: FRONT END ALIGNMENT DIAGRAM 16051

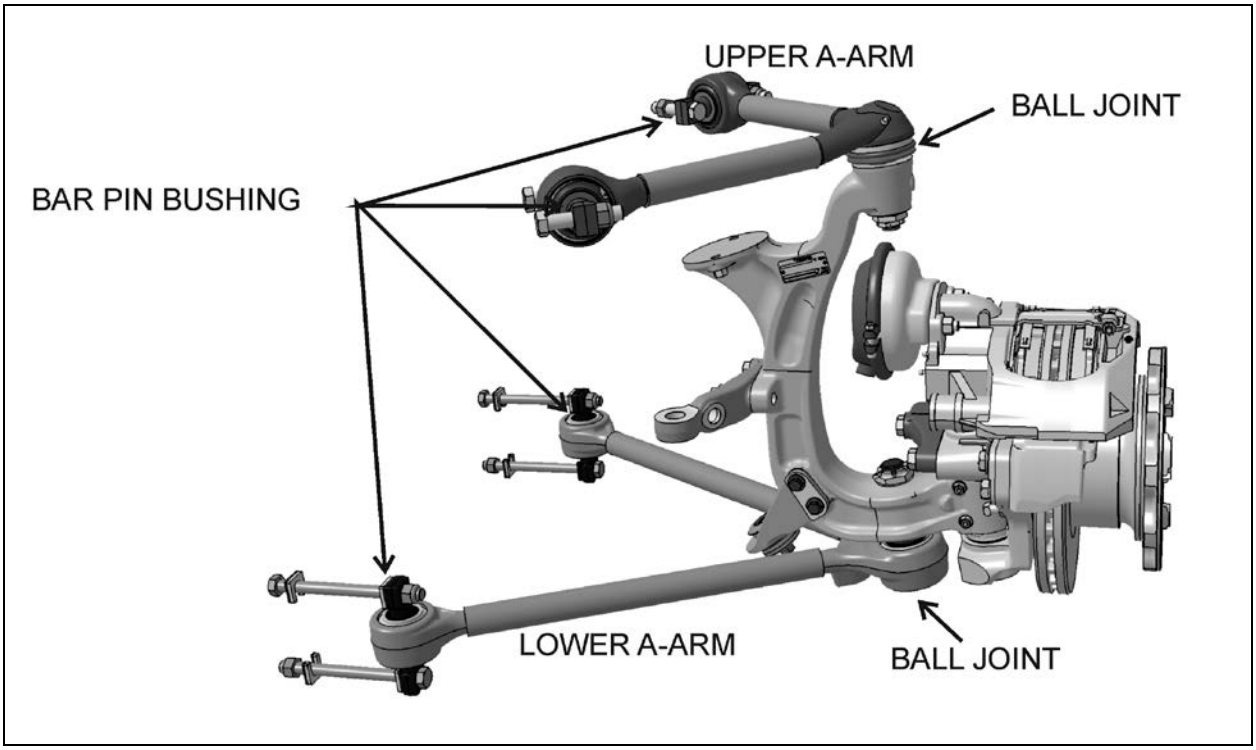

FIGURE 27: A-ARM JOINT IDENTIFICATION

4.12 LOWER AND UPPER A-ARM BALL PIN BUSHING REPAIR

The assembly work may be done only by a recognized specialized workshop. Ensure that old and new parts do not get mixed up with each other. It is for this reason that all the old parts are to be scrapped immediately after a joint has been stripped down. A complete repair set must be used for each joint repaired, i.e. use of only part of a repair set is not permissible.

4.12.1 Inspection

Take off the load from the joint by lifting the front of the vehicle. Apply a load on the joint in all of the degrees of freedom in an axial, radial, etc. sense with a suitable lever tool. After the load is taken off, the joint has to spring back into its starting position. Free play is not acceptable.

Separation of rubber from ball pin or external joint shell is in accordance with "normal wear characteristics".

When the following characteristics are noted, the joint is to be changed:

-Free play;

-Radial cracking of the external sheet-metal race.

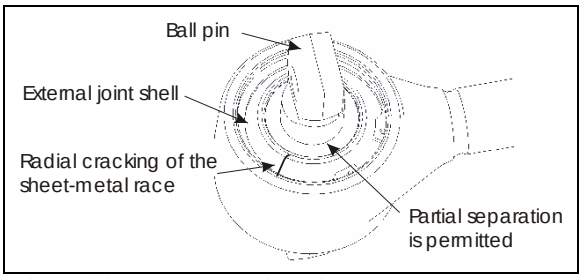

FIGURE 28: BALL PIN BUSHING

4.12.2 Stripping Down

Strip down the defective joint through removal of retaining ring, annular spacer and ball pin bushing assembly and thereafter clean out housing bore and locking circlips groove.

4.12.3 Assembly

Execute assembly of the new joint parts in the following sequence:

1. Complete moistening of the contact surface between housing bore and ball pin bushing through application of the grease.

NOTE
Apply grease, only in the case of repair kit (Prevost # 611114)).

2. Insert ball pin bushing assembly. In case of the two-bolt type, ensure that the bolt bores are in the correct position in relation to the axis of the tube.
3. Place joint in receiving fixture and mount annular assembly tool on the housing. Then locate annular spacer and retaining ring in the housing using axial load with the aid of assembly matrix. If the ends of the annular spacer are not in contact with each other, the thus formed opening must be located at 180° to the opening of the retaining ring. Pay attention during assembly to ensure that the retaining ring eyelets are located at each side of the housing shaft axis (retaining ring eyelet lug points to tube), and that retaining ring is properly engaged in the groove of the housing.
4. When repairing defective ball pin assemblies, the necked down-bolt must regularly be replaced with a new one.

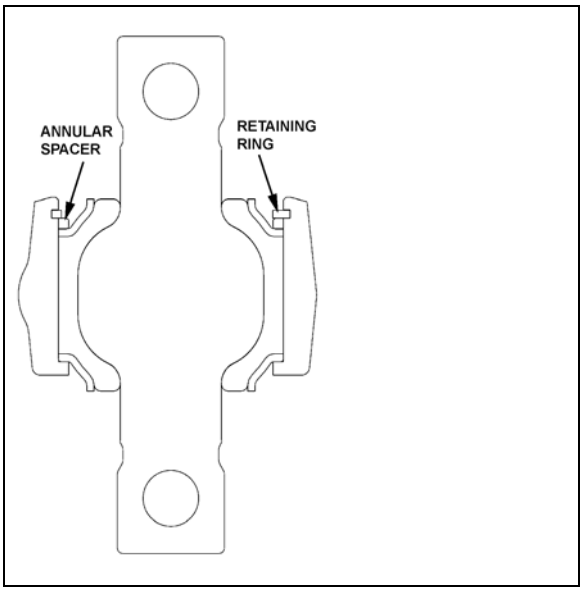

FIGURE 29: LOWER A-ARM BALL PIN BUSHING 16047

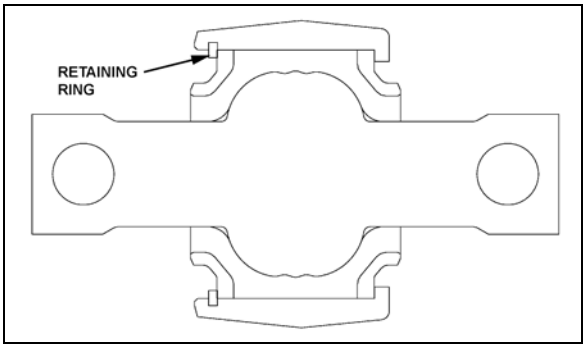

FIGURE 30: UPPER A-ARM BALL PIN BUSHING

4.13 LOWER A-ARM BALL JOINT REPAIR

Take off the load from the ball joint by lifting the front of the vehicle. Apply a load on the joint in all of the degrees of freedom in an axial, radial, etc. sense with a suitable lever tool. After the load is taken off, the joint has to spring back into its starting position. Free play is not acceptable.

Separation of rubber from ball pin or external joint bushing shell is in accordance with "normal wear characteristics".

When the following characteristics are noted, the joint is to be changed:

- Free play;
- Radial cracking of the external bushing shell.

4.13.1 Stripping Down

Strip down the defective joint through removal of retaining ring, annular spacer and ball pin/bushing, assembly and thereafter clean out housing bore and locking circlips groove

4.13.2 Assembly

Assemble the new component parts of the joint in the following sequence:

1. Complete moistening of the contact surface between housing bore and ball pin through application of the grease.
2. Place joint in receiving fixture and mount annular assembly tool on the housing. Then locate annular spacer and retaining ring in the housing using axial load with the aid of assembly matrix. If the ends of the annular spacer are not in contact with each other, the thus formed opening must be located at 180° to the opening of the retaining ring. Pay attention during assembly to ensure that the retaining ring eyelets are located at each side of the housing shaft axis (retaining ring eyelet lug points to tube), and that retaining ring is properly engaged in the groove of the housing.
3. Faultlessly apply grease by mechanical means to bracket-outer core and ball-inner cone. Insert bracket outer cone in fixture with distance ring and then use press tool to apply pressure to press mount with ball-inner cone.

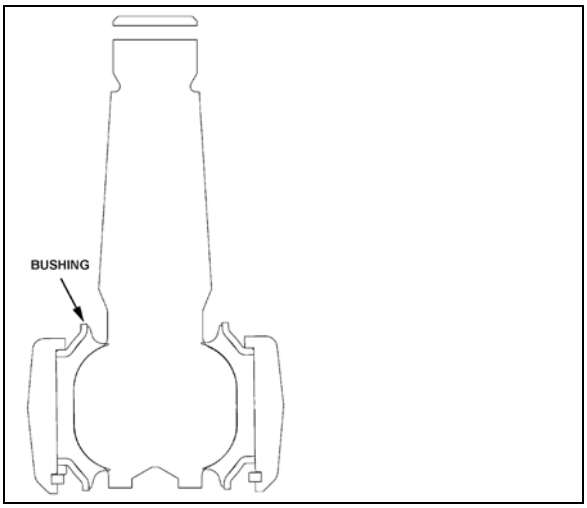

FIGURE 31: LOWER A-ARM BALL JOINT

4.14 UPPER A-ARM BALL JOINT

4.14.1 Visual Inspection

Check the condition of the sealing boot, in particular:

Check if the retainer ring, which secures the sealing boot at the conical section of the ball stud, is still present.

Check if grease is present on the external surface of the sealing boots. Escaped fluid and accumulations of grease on the sealing boot may be the result of the sealing boot's rupturing. In this case, the ball joint must be systematically replaced.

4.14.2 Play Measurement

1. Raise the vehicle and support through axle jacking points.
2. Using a caliper, measure dimension “A” on Figure 32.
3. With a lever tool, exert sufficient force under the upper A-arm as to separate the upper A-arm from the upright in order to have the ball joint to its maximum extent. Measure

dimension A again. If the difference between the two dimensions is greater than 0.060" (1.5mm), then the ball joint should be replaced.

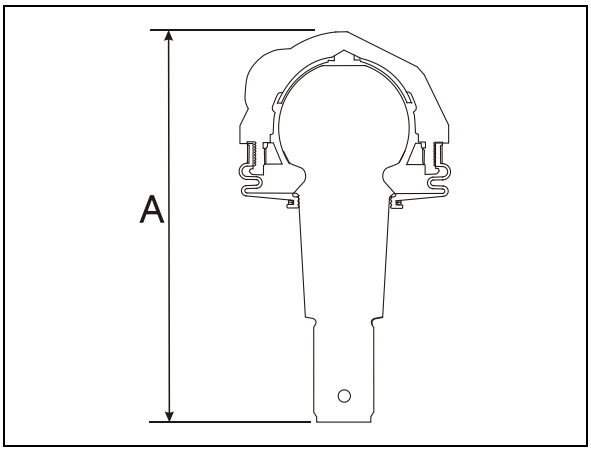

FIGURE 32: UPPER A-ARM BALL JOINT 16116

4.15 FRONT AIR SPRINGS

Two *"rolling lobe"* type air springs are used with the independent front suspension, one at each wheel. These air springs are special and use the complete piston as an extra reservoir to lower the spring stiffness. Front air springs are attached to the subframe and to uprights.

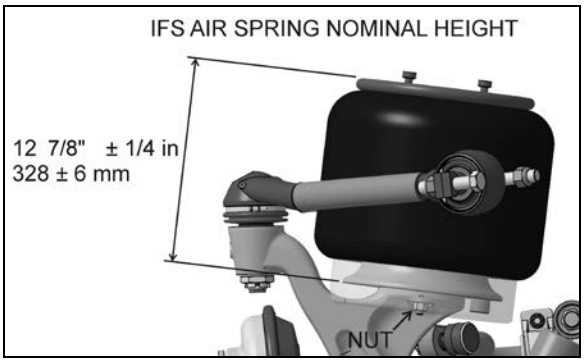

FIGURE 33: AIR SPRINGS 16052

4.15.1 Inspection

1. Check operation of air springs.
2. Visually inspect bellows for evidence of cracks, punctures, deterioration, or chafing. Replace the air spring if damage is evident.
3. With the primary air system at normal operating pressure (122 - 140 psi (841 - 965 kPa)), coat all suspension air line connections and bellows mounting areas with a water and soap solution. Bubbles will indicate an air leak, and none is permissible. Repair or replace defective parts.

> ***NOTE***
>
> *If air spring is removed from vehicle, bellows can be lightly inflated and submerged in water to detect any leakage. If leakage is detected, replace air spring.*

> **WARNING**
>
> To prevent personal injury, do not apply more than 10 psi (69 kPa) air pressure to the dismounted air spring.

4.15.2 Removal

> ***NOTE***
>
> *Front air springs can be removed without removing the entire suspension assembly.*

1. Jack up the vehicle using the axles jacking points.
2. Safely support the front of the vehicle at the recommended body jacking points.
3. To gain access to a given air spring, the corresponding wheel can be removed.

> **CAUTION**
>
> Only the recommended jacking points must be used as outlined in Section 18, "Body" in the maintenance manual.

> **CAUTION**
>
> Always adequately support the IFS assembly when lifting up the vehicle to avoid maximum extension of shock absorber.

4. Exhaust compressed air from accessory air tank by opening drain cock under reservoir.
5. Disconnect the height control valve link and pull down the control arm to ensure all air is exhausted from air springs.
6. Lower the IFS slightly while maintaining the vehicle body at the same level.

> ***NOTE***
>
> *While performing this step, do not change the height control valve control arm adjustment.*

7. Disconnect air line from air spring, remove elbow (if applicable), and cover both the line end and fitting to prevent the entry of foreign matter.
8. Unscrew the two air spring lower nuts (2 nuts). Rotate the air spring to disengage the upper mounting and remove the air spring.

4.15.3 Installation

NOTE

To facilitate air spring installation, compress it manually then put a piece of tape over the air line threaded fitting. This prevents air from getting back into the bag and keeps it compressed, thus enabling to place the bag in between the mounting plates and greatly easing installation.

1. Compress air spring as necessary, then aligning studs with their holes, position air spring between both the lower and upper supports. Thread the lower nuts a few turns.
2. Tighten and torque the lower stud nuts as prescribed in Torque Table 2.
3. Install elbow (if applicable), then connect air line.
4. Connect the height control valve link.
5. Build up air pressure in system.

NOTE

To accelerate this operation, air reservoirs can be filled from an exterior air supply connected to the accessory tank fill valve or to the emergency fill valve.

6. Check operation of air springs and with the primary air system at normal operating pressure(122 - 140 psi (841 - 965 kPa)), coat the air line connections and air spring mounting areas with a water and soap solution. Bubbles will indicate an air leak, and none is permissible. Repair or replace defective parts.

4.16 SHOCK ABSORBERS

The two front shock absorbers are double-acting and telescopic type. Shock absorbers ensure a smooth ride and enhance vehicle stability on the road. Front shock absorbers have eye-type mountings on the upper side and bayonet type on lower side. Shock absorbers are non-adjustable and non-repairable.

CAUTION

When a shock absorber is found defective, always replace with a new set on affected axle, except if there has been a recent replacement of one unit. The following method will help in determining if both shock absorbers on the same axle have to be replaced. (Refer to the SACHS document “Guideline To Evaluate Warranty Claims” annexed at the end of this section before replacing a shock).

4.16.1 Shock Absorber Removal

1. Remove the nut, washer and rubber joint from shock absorber mounting stud. Discard the rubber joints.

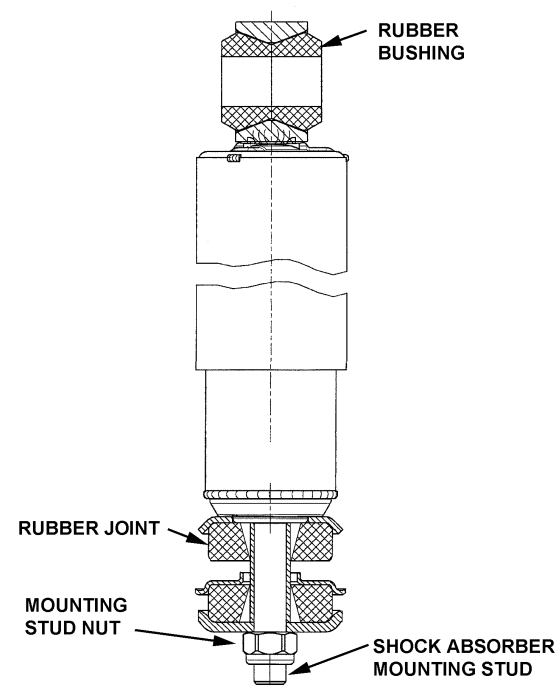

FIGURE 34: SHOCK ABSORBER 16112

2. Remove the nut and washer from shock absorber mounting pin (upper side), taking care to identify the inner and outer washers to ease reinstallation.
3. Remove the shock absorber from the vehicle.
4. Remove inner: washers, rubber joint and bushings from the shock absorber. Discard bushings and rubber joint.

4.16.2 Shock Absorber Installation

1. Check that the shock absorber mounting stud is tightened as prescribed in Torque Table 2. Ensure that the stud is clean and not stripped (upper end).
2. Install new rubber (mounting) bushing on shock absorber (upper end).
3. Place the inner washer on shock absorber stud.
4. On the lower mounting, take care to install the rubber joints with the wide end of the tapered hole as shown in Figure 35.

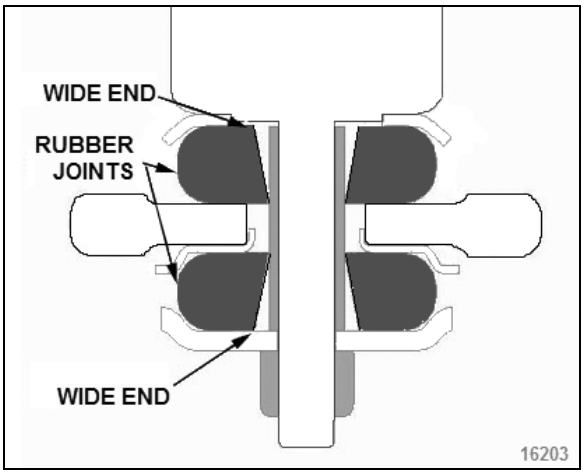

FIGURE 35: LOWER SHOCK MOUNTING BUSHINGS

5. Install the shock absorber as shown in Figure 34 with the mounting stud protruding through the hole in the mounting bracket and the shock absorber eyes over the mounting pins. Install the outer washer.
6. Place a rubber joint and washer on the shock absorber mounting stud. Place the lower shock absorber mounting stud nut and torque as prescribed in Torque Table 2.
7. Place the upper mounting pin stud nut and torque as prescribed in Torque Table 2.

4.17 SWAY BAR

A sway bar is provided on front and rear suspension to increase vehicle stability. It controls lateral motion (swaying movement) of vehicle.

4.17.1 Removal

1. Disconnect the two links from sway bar.
2. Safely support the sway bar. Unbolt bushing collars from subframe.
3. Remove sway bar.

NOTE
Sway bar bushings are slit to ease their removal.

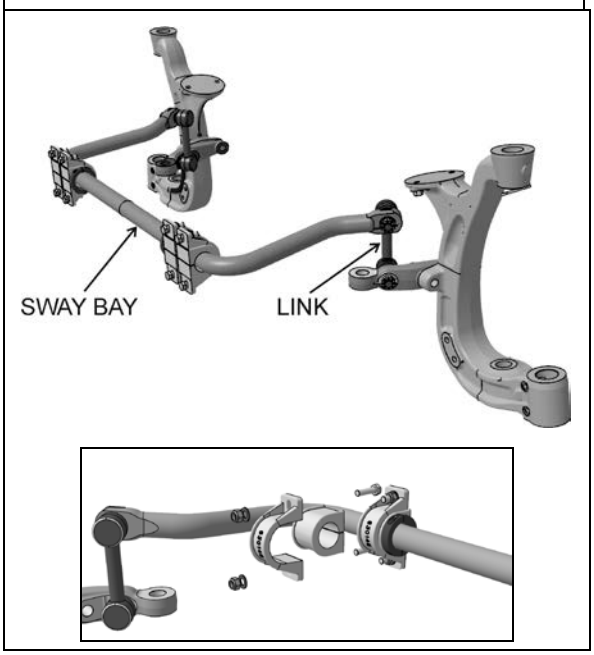

FIGURE 36: SWAY BAR (INDEPENDENT FRONT SUSPENSION) 16138_C

4.17.2 Installation

1. Loosely install the sway bar.
2. Torque bushing collar nuts as prescribed per Torque Table 2.
3. Torque sway bar link nuts as prescribed per Torque Table 2.

5 REAR SUSPENSION

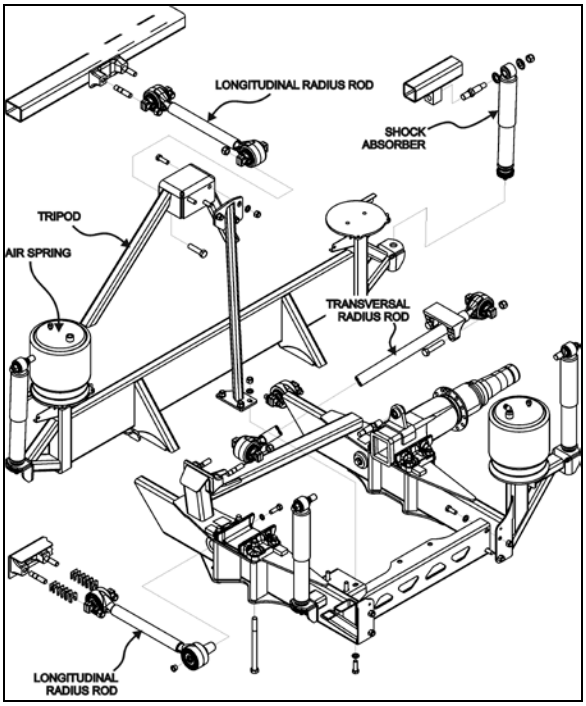

FIGURE 37: DRIVE AXLE, DETAILS OF REAR SUSPENSION 16106

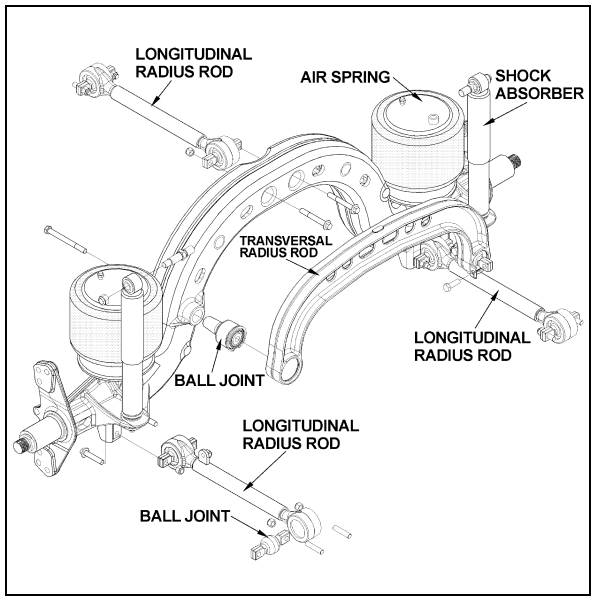

FIGURE 38: TAG AXLE SUSPENSION

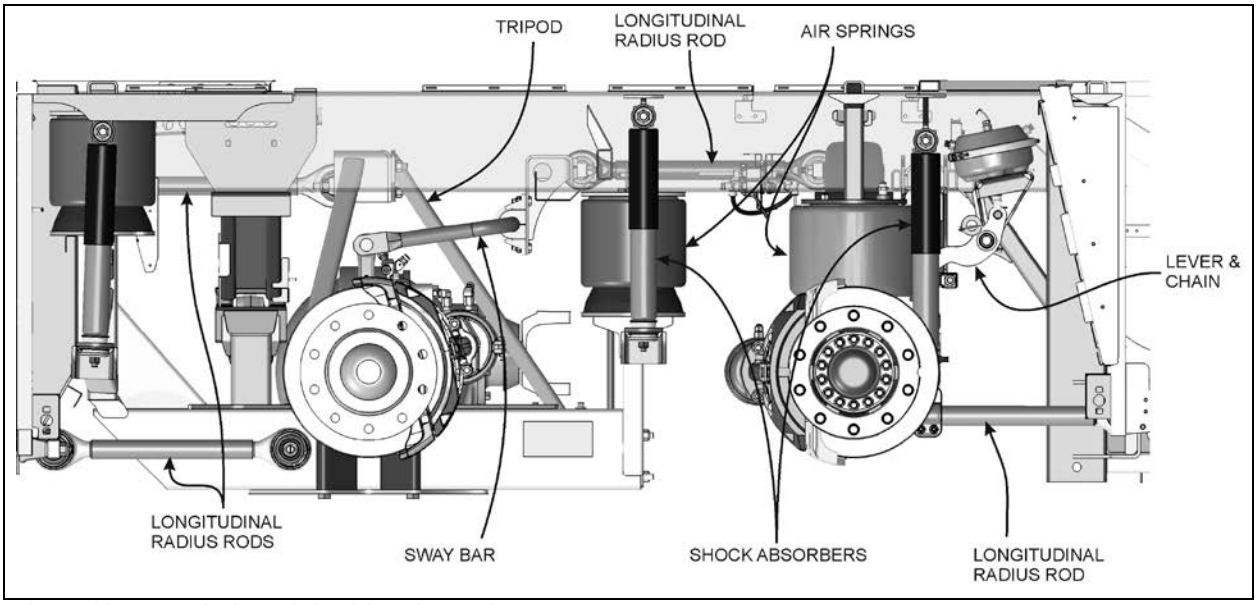

FIGURE 39: REAR SUSPENSION COMPONENTS 16003

5.1 AIR SPRINGS

The air springs are made from a special compound rubber molded to the proper contour and dimensions. The entire vertical load of the vehicle is supported by these springs. Each of the two axles is provided with air springs that are attached to the subframe and to the axles.

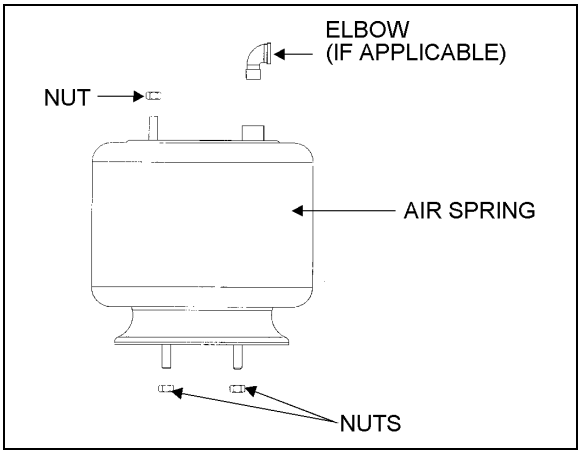

FIGURE 40: AIR SPRING 16052

5.1.1 Inspection

1. Check operation of bellows.
2. Visually inspect bellows for evidence of cracks, punctures, deterioration, or chafing. Replace the bellows if any damage is evident.
3. With the primary air system at normal operating pressure (122 - 140 psi (841 - 965 kPa)), coat all suspension air line connections and bellows mounting areas with a water and soap solution. Bubbles will indicate an air leak, and none is permissible. Repair or replace defective parts.

> ***NOTE***
>
> *If air spring is removed from vehicle, bellows can be lightly inflated and submerged in water to detect any leakage. If any leakage is detected, replace bellows.*

> **WARNING**
>
> To prevent personal injury, do not apply more than 10 psi (69 kPa) of air pressure to the uninstalled air spring.

5.1.2 Removal

> ***NOTE***
>
> *Suspension air springs (drive and tag axles) can be removed without removing the entire axle assembly.*

1. Safely support vehicle at the recommended body jacking points. To gain access to a given air spring, the corresponding wheel can be removed as follows.

   a) Jack vehicle until the tire clears the ground, and place safety supports underneath body.

> **CAUTION**
>
> Only the recommended jacking points must be used as outlined in Section 18, “Body”.

   b) Support the axle with a suitable hydraulic floor jack at the recommended jacking point.

   c) Remove wheel.

2. Exhaust compressed air from accessory air tank by opening drain cock under reservoir.
3. Disconnect the height control valve link and pull down the control arm to ensure all air is exhausted from air springs.

> ***NOTE***
>
> *While performing this step, do not change the height control valve control arm adjustment.*

4. Disconnect air line from air spring, remove elbow (if applicable), and cover both the line end and fitting to prevent the entry of foreign matter.
5. Remove the air spring upper nut, and then the two lower nuts. Remove air spring.

5.1.3 Installation

1. Compress air spring as necessary, then aligning studs with their holes, position air spring between both the lower and upper supports. Thread the lower nuts and the small upper nut a few turns.

NOTE

To facilitate air spring installation, compress it manually then put a piece of tape over the air line threaded fitting. This prevents air from getting back into the bag and keeps it compressed, thus enabling to place the bag in between the mounting plates and greatly easing installation.

2. Tighten and torque the lower stud nuts, and then the upper one as prescribed in Torque Table 3.
3. Thread the remaining upper nut (large nut) and tighten as prescribed in Torque Table 3.
4. Install elbow (if applicable), then connect air line.
5. Connect the height control valve link.
6. Build up air pressure in system.

NOTE

To accelerate this operation, air reservoirs can be filled from an exterior air supply connected to the accessory tank fill valve or to the emergency fill valve.

7. Check operation of bellows, and with the primary air system at normal operating pressure (122 - 140 psi (841 - 965 kPa)),coat the air line connections and air spring mounting areas with a water and soap solution. Bubbles will indicate an air leak, and none is permissible. Repair or replace defective parts.
8. Reinstall wheel.
9. Remove the hydraulic floor jack from under the axle, then lower vehicle to ground.

5.2 SHOCK ABSORBERS

Double-action, telescoping-type shock absorbers ensure a smooth ride and enhance vehicle stability on the road. The tag axle is provided with two shock absorbers while the drive axle is provided with four of them (Figure 41).

Shock absorbers are non-adjustable and non-repairable. Maintenance requirements involve replacement of the rubber mounting bushings, and tightening of all shock absorber mounting pins at the proper torque (refer to Torque Table 3) when shock absorber replacement occurs. If a shock absorber becomes inoperative, complete unit must be replaced.

CAUTION

When a shock absorber is found defective, always replace with a new set on affected axle, except if there has been a recent replacement of one unit. The following method will help in determining if both shock absorbers on the same axle have to be replaced.

5.2.1 Inspection

Loosen lower mounting of both shocks, and then carefully attempt to raise and lower the bottom portion of each shock. Note the rate of effort for distance of travel. Replace both shocks if a definite differential rate is found.

The shock must be bench checked in an upright, vertical position. If checked in any other position, air will enter the cylinder tube and make the shock absorber appear defective.

Proceed as follows to check shock absorbers:

1. With the shock absorber in a vertical position (top end up), clamp the bottom mount in a vise.

CAUTION

Do not clamp the reservoir tube or the dust tube.

2. Rotate the dust tube. Notice any binding condition (may be compared with new unit). Binding condition indicates a scored rod. Units with scored rods should be replaced.
3. Fully extend shocks and check for leaks in the seal cover area. Shock fluid is a very thin hydraulic fluid that has a characteristic odor and dark brown tint. A slight trace of shock fluid around the seal cover area is not a cause for replacement. The shock seal is designed to permit a very slight seepage to lubricate the rod. Units that leak should be replaced.
4. Visually check shock for dents that could cause the shock to bind. Also, check for a bent rod.
5. Extend and collapse shock several times to determine that it has control (resistance) in both rebound and compression.
6. Visually inspect the shock mountings and vehicle mounting for:
   a) Broken mounts;

b) Extreme bushing wear;

c) Shifted bushing or sleeve;

d) Deep cracks in bushing material (shallow surface cracks are normal);

e) Loose shock absorber pins;

f) Presence of convex washers, and their position relative to the rubber bushing.

5.2.2 Removal

1. Remove nuts and washers from shock absorbers on upper mounting pin and lower mounting bracket, taking care to identify the inner and outer washers to ease reinstallation. Refer to Figure 37 for details.
2. Remove the shock absorber assembly from pins.
4. Remove the two rubber joints from the shock absorber and discard them.

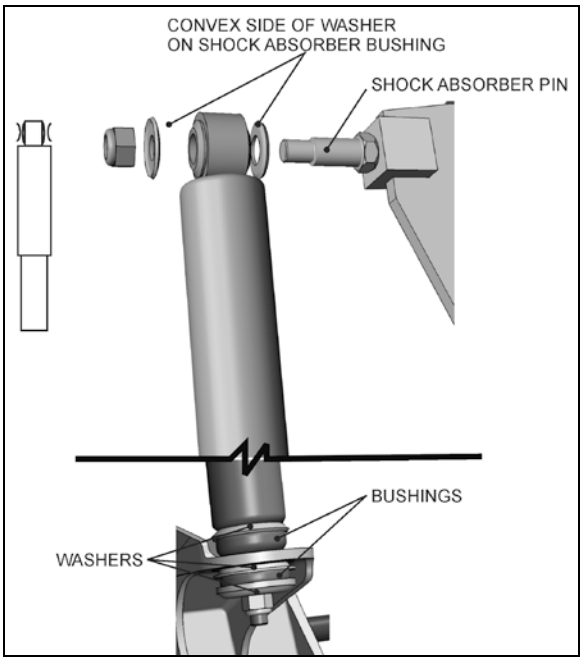

FIGURE 41: TYPICAL SHOCK ABSORBER SETUP 16009

5.2.3 Installation

1. Ensure that the shock absorber mounting pin is tight and that the threads are not stripped.
2. Install new upper rubber mounting bushings on shock absorber.
3. On the lower mounting, take care to install the rubber joints with the wide end of the tapered hole as shown in Figure 42.

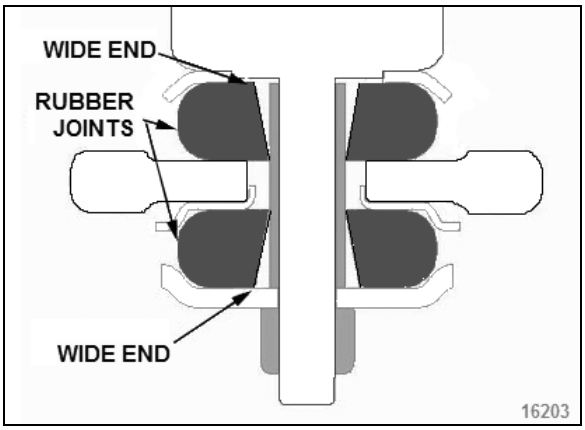

FIGURE 42: LOWER SHOCK MOUNTING BUSHINGS

4. At the upper mounting pin, place the inner washer with washer convex side facing the shock absorber rubber bushing.
5. Install the shock absorber eyes over the mounting pin, then the outer washers (with washer convex side facing the shock absorber rubber joints.

NOTE
If shock absorber pins are removed, they must be reinstalled using "Loctite" (see "Parts Specifications" in this section).

5. Place the lower and upper mounting pin stud nuts and torque as prescribed in Torque Table 3.

5.3 RADIUS RODS

Radius rods are used to secure the axles in the proper transversal and longitudinal positions. Four radius rods are provided on the drive axle suspension (three longitudinal and one transversal) and four on the tag axle. These rods transmit both braking and driving forces from the axles to the vehicle body.

Refer to section 2.3 for more information regarding radius rods.

6 SUSPENSION AIR SYSTEM

The suspension air system has its own air reservoir (accessory tank) which is located in the reclining bumper compartment. Pressurized air from the main tank (wet tank) flows through a pressure protection valve (PR-4), to the accessory air tank and through an air filter which is located in front service compartment.

The pressure protection valve (PR-4) is mounted to the supply port of the tank. This valve controls the pressure at which compressed air is delivered to the accessory air tank. The valve remains closed until a preset pressure is reached (approximately 70 psi (485 kPa)). It then opens and passes air out the delivery port.

The main use for this valve is to protect the main air system by ensuring at all times a sufficient air pressure in the main system (i.e. air delivered to the accessories will be shut off in case of a decrease in pressure). Maintenance and repair information on the pressure protection valve is supplied in the applicable booklet, annexed to Section 12, *"Brakes and Air System"* under reference number SD-03-2010.

WARNING

Depressurize parts prior to removal.

6.1 INSPECTION

The following inspection should be performed at established service inspection periods. Performing these procedures will allow substandard performance to be discovered before the condition becomes bad enough to cause operator complaints and failure on a run.

1. Visually inspect the suspension air lines for evidence of chafing on metal parts or other damage.
2. Visually inspect the air springs for cracks, abrasion or other damage.
3. Replace any parts found to be damaged.

6.2 AIR LINE TEST

With the main air system at normal operating pressure, coat all suspension air line connections and air spring mountings with a solution of soap and water. Air leakage will produce soap bubbles. Any leak found must be corrected as no air leakage is permissible.

7 SUSPENSION HEIGHT ADJUSTMENT

The flow of pressurized air from the accessory air tank to the air springs is controlled by three height control valves. These valves are mounted to the subframe and connected to the axles through an arm and link connection. This connection allows the valves to apportion air pressure in the springs to the vehicle load, maintaining normal ride height.

To adjust suspension height, refer to Maintenance Information MI16-14 SUSPENSION HEIGHT ADJUSTMENT USING HEIGHT CONTROL VALVES included after Section 16 in this Maintenance Manual.

7.1 NORMAL RIDE HEIGHT

The normal ride height is obtained by measuring and adjusting air spring height of front and rear suspension.

FRONT SUSPENSION (I-BEAM AXLE)

2 air springs

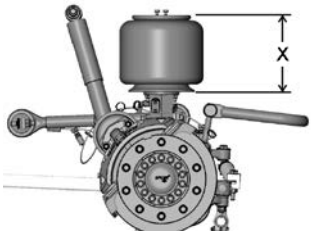

X = 11 ¾ ± ¼ inch (297 ± 6 mm)

INDEPENDENT FRONT SUSPENSION (IFS)

2 air springs

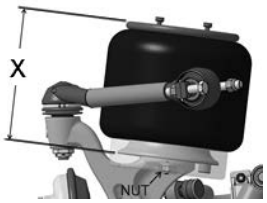

X = 12 7/8 ± 1/4 inch (327 ± 6 mm)

REAR SUSPENSION

4 air springs

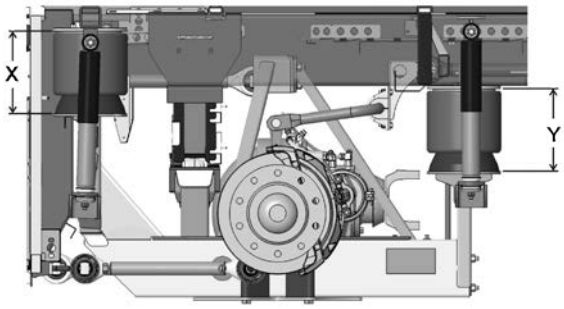

FORE AIR SPRINGS

X = 11 ½ ± 1/16 inch (292 ± 1.5 mm)

AFT AIR SPRINGS

Y = 11 ½ ± 1/4 inch (292 ± 6 mm)

7.2 HEIGHT CONTROL VALVES

The height control valves automatically add air to, or release air from air springs to maintain constant suspension height regardless of load, or load distribution. Each valve adjusts independently according to the following conditions:

Loading position

As the load increases and lowers the vehicle body, the control arm commands the height control valve to add air to air springs.

Neutral position

When vehicle body reaches the normal ride height, the height control valve control arm reaches the "neutral" position and keeps both the supply and exhaust ports closed to ensure normal ride height is maintained. This condition remains static until the vehicle load is altered.

Unloading position

As the load decreases and raises the vehicle body, the control arm commands the height control valve to release air from air springs.

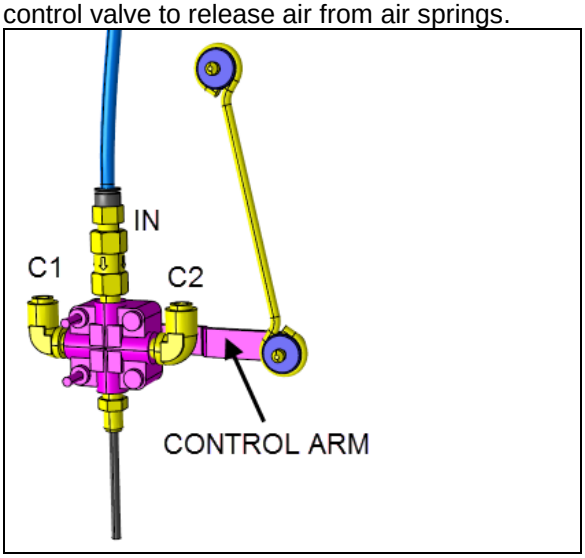

FIGURE 43: HEIGHT CONTROL VALVE 16093

7.3 MAINTENANCE

The height control valve requires no periodic maintenance. Height control valve linkage operates on rubber bushings and no lubrication should be attempted at this point. Inspect the valve for loose joints, air leaks and worn bushings.

7.3.1 Removal and installation

Before disconnecting any height control valve air lines, securely support the vehicle by its jacking points on the body, and place safety support underneath body. Refer to *"VEHICLE JACKING POINTS"* in Section 18, *"Body"*.

1. Exhaust air from air system by opening the drain cock on accessory air reservoir. Remove height control valves.
2. Disconnect overtravel lever from link and pull down lever to exhaust remaining air from air springs.
3. Disconnect air supply and delivery lines from the height control valve. Cover ends of the lines with tape to prevent entry of foreign matter.
4. Remove the nuts retaining the height control valve to the mounting bracket, then remove valve assembly.

   Note: The height control valve bolts equipped with a nylon insert should be replaced after the third (3rd) tightening.

Reverse removal procedure to replace height control valve. After installation, check for leakage using a soap and water solution.

7.3.2 Air leakage test

NOTE
The following procedure applies when valve assembly has been removed from vehicle.

1. Clean the exterior of valve assembly.
2. Connect air pressure line to air inlet port, then allow air pressure build-up (70- 100 psi (480 - 690 kPa)).
3. Dip the valve assembly in a container of water, and watch for air bubbles when the control arm is in the center position. No air should escape from any point of the valve assembly.
4. If bubbles appear from the air spring port, this is an indication that the air inlet valve assembly is defective and must be replaced.
5. Remove air pressure line from air inlet fitting and connect it to the air spring port. If bubbles appear at the air inlet check valve port, this is an indication that the check valve unit is defective and must be replaced.
6. If bubbles appear at the exhaust port, this is an indication that the exhaust valve assembly is defective and must be replaced.
7. If bubbles appear around edge of valve cover plate, the cover plate gasket must be replaced.
8. If no leaks are found, remove valve assembly from water, then with air pressure still connected to the air spring port, actuate control arm to remove any excess water which may have entered exhaust valve chamber. Remove air line, connect it to the air inlet port, and repeat operation to remove water from the air inlet valve chamber.

8 "LEVEL-LOW" LEVELING SYSTEM – VIP SERIES OPTION ONLY

The purpose of the *Level-Low* leveling system is to adjust suspension in three separate points (front, rear right and rear left) in order to level vehicle body. This system can be put into service when the ignition key is turned to the *"ON"* position, and must be used only when the parking brake is applied. The *Level-Low* warning light on the dashboard indicates that the selector switch is not in the *"OFF"* position. Level low system controls are located on L.H. side control panel.

8.1 PRINCIPLES OF OPERATION

Down

The (front/rear right/rear left) control solenoid valve supplies air to the (front/rear right/rear left) five-way three-position air control valve, which bypasses the (front/rear right/rear left) height control valve, and opens a passage to allow the air control and exhaust valve to release air from (front/rear right/rear left) air springs.

Up

The (front/rear right/rear left) control solenoid valve supplies air to the (front/rear right/rear left) five-way three-position air control valve, which bypasses the (front/rear right/rear left) height control valve, and opens a passage to allow the air control and exhaust valve to supply air to (front/rear right/rear left) air springs.

Drive

When the ignition key is turned to the *"ON"* position with selector knob in the *"DRIVE"* position, the drive control solenoid valve supplies air to all five-way three-position air control valves, each one opening a passage to allow height control valves to accomplish their function.

When the ignition key is turned to the *"OFF"* position and selector knob to the *"DRIVE"* position, the air is entrapped between air springs and five-way three-position air control valves to ensure the adjusted level will be kept.

WARNING
Never move vehicle with selector knob in any other position than the “DRIVE” position.

8.2 MAINTENANCE

Since the kneeling action is issued from both the air system and electrical system, refer to Section: 12, *“Brake and Air System”* and Section 06, *“Electrical System*”.

For diagnosis and understanding of the system, refer to wiring diagrams, and to the appropriate air system schematic diagram annexed to Section 12, *“Brake and Air System”*.

9 FRONT KNEELING SYSTEM (COACHES ONLY)

The kneeling system is used to lower front of vehicle. This allows passengers to board the vehicle with greater ease. The kneeling action is achieved by exhausting air from the front air springs (bellows). This system bypasses the height control valve to provide a fast up and down movement of the front suspension. Only seven seconds are required to lower vehicle from normal level to the lowered position, and approximately the same time to raise the vehicle back to normal level. The quick response is achieved by the kneeling air tank installed beside the secondary air reservoir (for exact position, refer to Section 12, *"Brake and Air System").*

This tank provides sufficient air supply to the kneeling system for some successive operations. The system is provided with two safety features; first, a speed switch will enable the kneeling system to work only below 5 mph (8 km/h). Secondly, the parking brake is automatically applied, and a limit switch will keep it applied as long as the vehicle has not returned to a certain height where the driver will be able to manually remove the parking brake.

The purpose of the front axle hi-buoy function in this system is to raise the front end of the vehicle to allow an extra ground clearance for particular situations. In driving condition, the height control valve is in operation and only the hi-buoy can be operated.

9.1 PRINCIPLE OF OPERATION

Refer to the air system schematic diagram annexed at the end of Section 12, *"Brake and Air System".*

DOWN (FRONT KNEELING):

Both the air spring control and air spring exhaust solenoid valves are energized, so the air control valves release air from front air springs. The height control valve is bypassed to ensure no air is forwarded to air springs while lowering the front suspension.

UP (FRONT HIGH-BUOY):

Only the air spring control solenoid valve is energized, so the air coming from the kneeling air tank is routed through air control valves, and up to front air springs.

The height control valve is bypassed until the kneeling proximity switch signals the kneeling module to cut off the air spring control solenoid valve, about 1" (25 mm) below normal ride height. The final height adjustment is achieved by the height control valve.

9.2 MAINTENANCE

Since the kneeling action is issued from both the air system and electrical system, refer to Section: 12, *"Brake and Air System"* and Section 06, *"Electrical System".*

For diagnosis and understanding of the system, refer to wiring diagrams, and to the appropriate air system schematic diagram annexed to Section 12, *"Brake and Air System".*

9.3 AIR SPRING CONTROL SOLENOID VALVES

9.3.1 Removal and installation

1. On the rear side of steering compartment, locate both the air spring control and air spring exhaust solenoid valves.
2. Identify hoses and wires to ease reinstallation. Disconnect solenoid wires and the three flexible black hoses from solenoid valves.
3. Unscrew and remove the control solenoid valve and exhaust solenoid valve assembly. Place on a clean working place.

Reverse removal procedure to reinstall.

CAUTION

Always adjust on "fill cycle". If it is necessary to lower vehicle height, release sufficient air to be well below height, and adjust to height or fill cycle.

10 HIGH-BUOY SYSTEM (COACHES ONLY)

The purpose of the full high-buoy system is to raise the entire vehicle body about 4" (100 mm) in order to increase ground clearance to board a ferryboat, to jump a curb, etc. This system can be put into service during normal vehicle operation.

10.1 PRINCIPLES OF OPERATION

The rear high-buoy system is added over the front kneeling (with front high-buoy). The front end uses the same valves as the front kneeling

(with front high-buoy). A solenoid valve is added to send air to the double shuttle valves for the rear end. It uses the same dash switch as the kneeling.

UP:

The air coming from the control valve flows through double shuttle valves, to supply air springs. The double shuttle valves prevent height control valves from releasing air from air springs.

DOWN:

The control valve, on the dashboard, cuts off air supply, so the double shuttle valves allow height control valves to accomplish their function. Height control valves release air from air springs until suspension returns to its normal position.

10.2 MAINTENANCE

Refer to the air system schematic diagram "OPT. FRONT KNEELING WITH REAR HIGH-BUOY COMBINATION.

10.3 HIGH-BUOY – PRESSURE REGULATOR

The H series vehicles pressure regulator is located on ceiling of the spare wheel and tire compartment and is accessible through the reclining bumper. On X series vehicles, the regulating valve is located in the front service compartment. This valve should be adjusted to 90 psi (621 kPa).

10.3.1 Adjustment

1. Before turning on system air pressure, release jam nut (2, Figure 44) then turn regulator adjustment handle counter-clockwise until the load is removed from the regulating spring.
2. Turn on system pressure.
3. Turn regulator adjustment handle clockwise until the desired outlet pressure is reached.
4. To avoid minor readjustment after making a change in pressure setting, always approach the desired pressure from a lower pressure. When reducing from a higher to a lower setting, first reduce the pressure at a lower pressure, and then increase it to the desired level of pressure.
5. Tighten jam nut (2,Figure 44) to lock pressure setting.

10.3.2 Disassembly

1. Shut off inlet pressure and reduce pressure in inlet and outlet lines to zero. Turn regulator adjustment handle (1, Figure 44) counterclockwise until all load is removed from regulating spring. Regulator can be disassembled without removal from air line.
2. Disassemble regulator in accordance with the item numbers on the exploded view.

Torque Table	
Item	Value
3 (Screw)	**25-35 lb-in (2.8-3.9 Nm)**
17 (Bottom plug)	**20-25 lb-in (2.3-2.8 Nm)**

10.3.3 Cleaning

1. Clean parts with warm water and soap. Dry parts and blow out internal passages in body using clean, dry compressed air.
2. Inspect parts. Replace those found to be damaged.

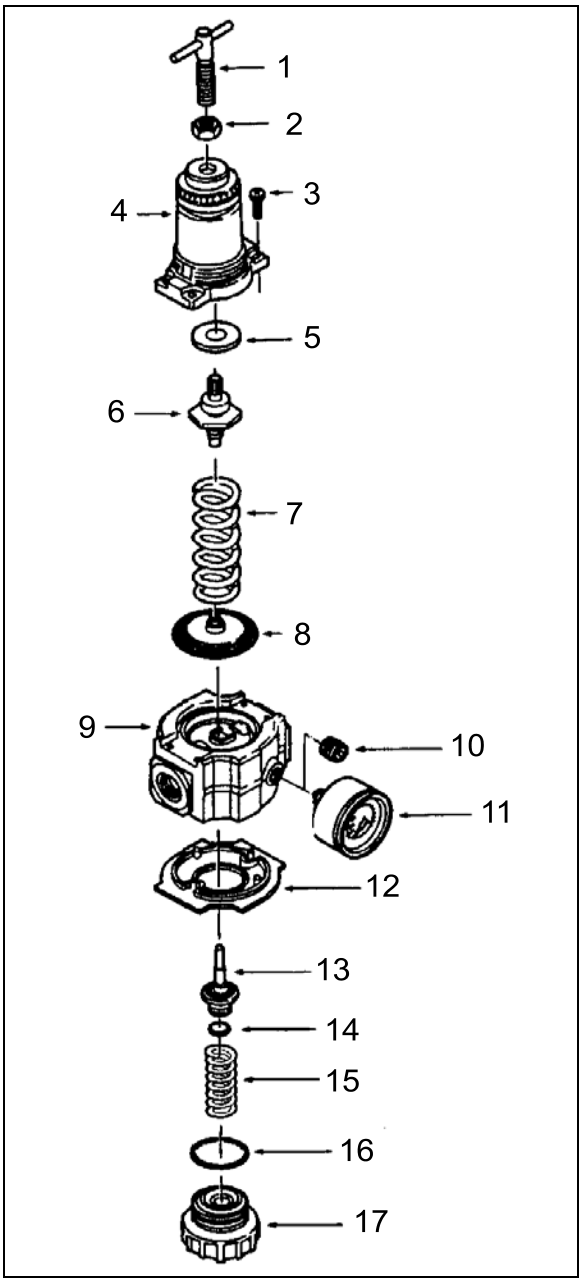

FIGURE 44: AIR PRESSURE REGULATOR 16035

10.3.4 Reassembly

1. Lubricate O-ring (14 and 16, Figure 44), valve stem (13), tip of adjusting screw (1), and the outer circumference and both sides of the thrust washer (8) with a light coat of good quality O-ring grease.
2. Assemble the regulator as shown on the exploded view.

11 LOW-BUOY SYSTEM (COACHES ONLY)

The purpose of the low-buoy system is to lower the whole suspension by about 4” (100 mm) in order to reduce the overall height for low clearances. This system can be put into service during normal vehicle operation.

11.1 PRINCIPLES OF OPERATION

The rear low-buoy is added over the front kneeling system. The control valve on the left console panel sends an electric signal from its pressure switch to control the front suspension as if kneeling. It also removes air from a relay valve that exhausts air supply to all leveling valves and the quick release in the rear section. Air from the rear suspension can then be depleted through the check valve-quick release assembly.

DOWN:

The control valve, on the L.H. control panel, cuts off air supply, so air is released from air springs. A relay valve prevents height control valves from supplying air springs.UP:

The control valve, on the L.H. control panel, supplies air to close the passage between both the delivery and supply ports. A relay valve opens and provides air springs until the suspension reaches the normal ride height.

11.2 MAINTENANCE

Refer to the air system schematic diagram “OPT. FRONT KNEELING WITH REAR LOW-BUOY COMBINATION”.

12 AIR SYSTEM

The basic air system consists of an air compressor, tanks, valves, filters and interconnecting lines and hoses (refer to Section 12, "Brake and Air System" for complete information). It provides a means for braking, operating controls and accessories, and suspension.

The air coming from the air dryer is first directed to the wet air tank, then to the primary (for the primary brake system), secondary (for the secondary brake system), and accessory (for the pneumatic accessories) air tanks (Figure 45).

In addition, an expansion air tank is installed in series with each air spring.

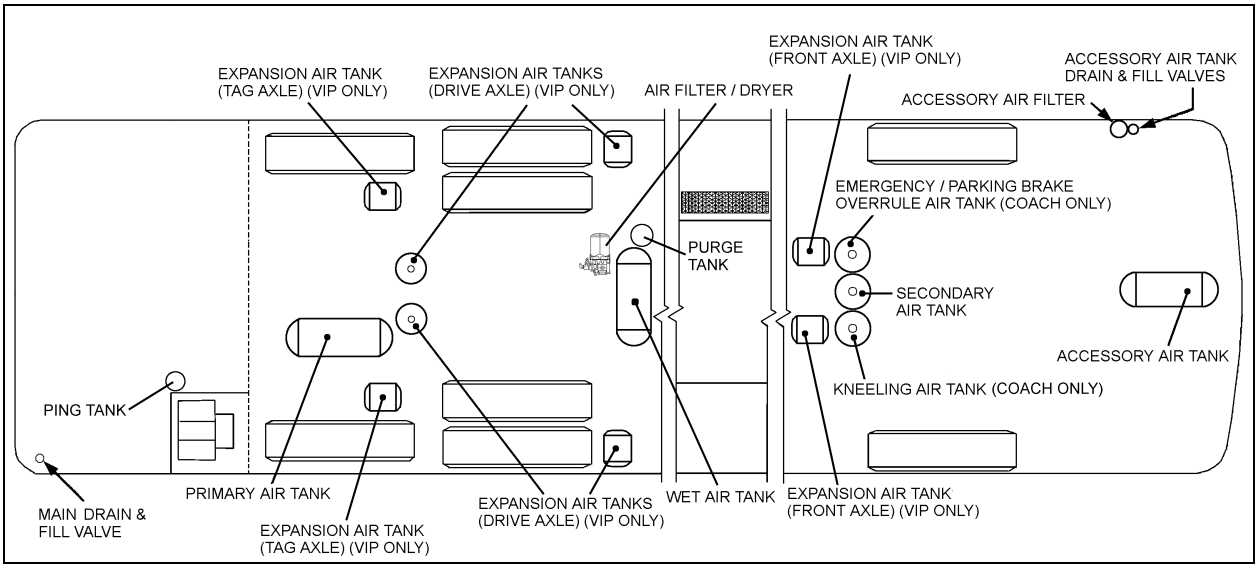

FIGURE 45: LOCATION OF AIR TANKS 12195

12.1 AIR TANK MAINTENANCE

Ensure that the accessory air tank is purged during pre-starting inspection. A good practice is to purge this tank at the end of every driving day by the remote air tank drain valve located in the service compartment (Figure 48).

Moreover, purge all tanks by their bottom drain valves at specified intervals.

12.1.1 Wet Air Tank

This tank is installed in front of and above drive axle in the rear wheelhousing and is provided with a bottom drain valve.

MAINTENANCE

It is recommended to **purge** the wet air tank by its bottom drain valve every 12,500 miles (20 000 km), or once a year, whichever comes first.

A remote valve located in engine compartment and accessible through engine R.H. side door is used to **purge daily** (Figure 46).

12.1.2 Primary Air Tank

The primary air tank is located above tag axle.

This tank is also provided with a bottom drain valve.

MAINTENANCE

It is recommended to **purge** the primary air tank by its bottom drain valve every 12,500 miles (20 000 km), or once a year, whichever comes first.

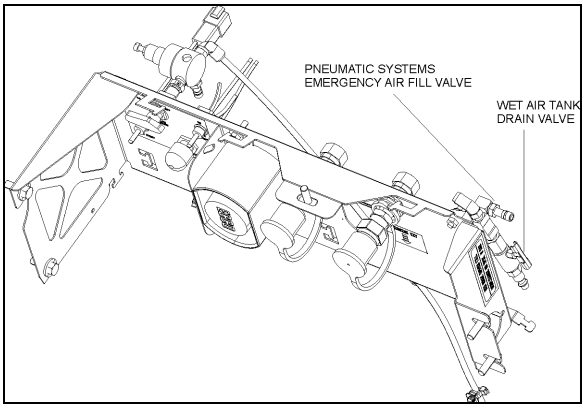

FIGURE 46: REAR VALVE LOCATION ON H3 SERIES 12162

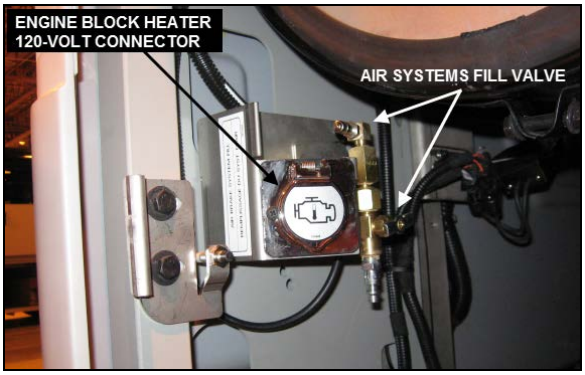

FIGURE 47: REAR VALVE LOCATION ON X3 SERIES

12.1.3 Secondary Air Tank

This tank is located in front wheelhousing. The tank is installed vertically and is provided with a bottom drain valve.

MAINTENANCE

It is recommended to **purge** the secondary air tank by its bottom drain valve every 12,500 miles (20 000 km), or once a year, whichever comes first.

12.1.4 Accessory Air Tank

On H3 vehicles, the accessory air tank is installed at the ceiling of spare wheel compartment. On X3 series, it is installed next to the secondary air tank (the tank may be installed vertically depending on type of front suspension). The tank is provided with a bottom drain valve.

MAINTENANCE

It is recommended to **purge** the accessory air tank by its bottom drain valve every 12,500 miles (20 000 km), or once a year, whichever comes first.

A remote drain valve is located in front service compartment. Refer to Section 12, paragraph "5. Accessory Air Filter" of the maintenance manual for daily purge procedure.

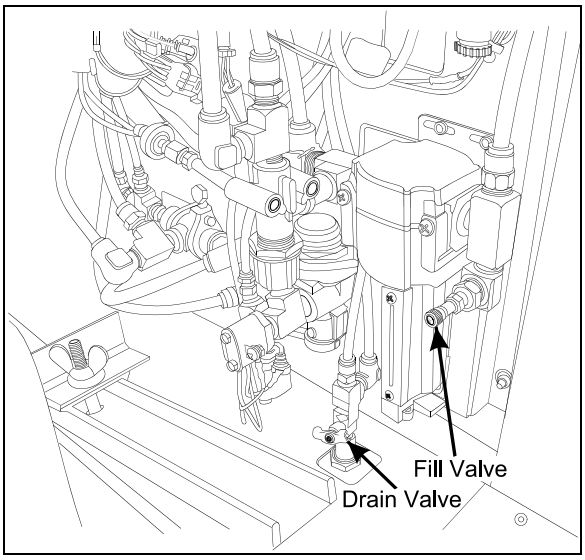

FIGURE 48: FRONT VALVE LOCATION ON H3 SERIES
12144

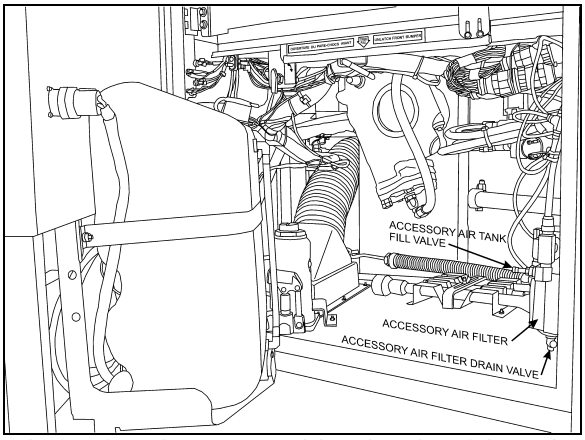

FIGURE 49: FRONT VALVE LOCATION ON X3 SERIES
12210

12.1.5 Expansion Air Tank

Two expansion tanks are located in front wheelhousing. These air tanks are located behind secondary air tank. Also, six expansion tanks are located near rear air springs (Figure 45). Expansion tanks are connected in series with air springs. Expansion tanks are used to lower the stiffness of the air spring. They are provided with a bottom drain valve.

MAINTENANCE

It is recommended to **purge** the expansion air tanks every 12,500 miles (20 000 km), or once a year, whichever comes first.

12.2 EMERGENCY FILL VALVES

The vehicle is equipped with two air system emergency fill valves to supplement the air system when air pressure is low and engine cannot be operated.

The rear valve is located in engine compartment and accessible from engine R.H. side door (Figure 46).

CAUTION

No other point should be used to supply air system. The maximum allowable air pressure is 125 psi (860 kPa).

The front valve is located in the front service compartment close to accessory air filter (Figure 48).

These two air valves are fitted with the same valve stems as standard tires, and can be filled by any standard external air supply line.

The rear valve will supply air for all systems (brakes, suspension and accessories) while the front valve will supply air for accessories only.

CAUTION

Air filled through these two points will pass through the standard air filtering system provided by Prevost. Do not fill air through any other points.

NOTE

Apply corrosion-protective compound on exposed threads.

13 TROUBLESHOOTING

Condition	Cause	Correction
Air springs deflate over time	1. Defective check valve assembly. 2. Defective exhaust valve assembly. 3. Leak in air line and/or air springs. 4. Defective valve cover, rubber O-rings or gasket.	1. Replace check valve assembly. 2. Replace exhaust valve assembly. 3. Replace air line or air springs. 4. Replace valve cover, O-rings or gasket.
Air springs raise to full height and fail to exhaust air pressure	1. A clogged exhaust screen in height control valve assembly. 2. A combination clogged exhaust screen and defective air inlet valve assembly.	1. Remove and clean screen. 2. Clean exhaust screen and replace air inlet valve assembly.
Erratic valve action	1. Dirt or foreign matter in the air valve lever chamber. 2. Defectives valves.	1. Remove valve cover and blow out dirt. Install cover using new gasket. 2. Overhaul height control valve assembly
Vehicle body fails to level to satisfactory ride height	1. Improper height control valve control arm adjustment	1. Adjust lever as directed.

14 SPECIFICATIONS

Independent Front Suspension Air Springs

Make.....Goodyear Tire and Rubber
Model……..1400
Type ..... Mae West
Diameter..... 14 inches
Air Inlet ..... 1/2''-14 NPTF AIR INLET

Front I-Beam axle air springs and tag axle air springs

Make.....Goodyear Tire and Rubber
Model……..1200
Type ..... Mae West
Nominal diameter .....12" (304 mm)

Drive axle air springs

Make.....Goodyear Tire and Rubber
Type ..... Double Flare
Nominal diameter .....11.5" (279 mm)

Independent Front Suspension - Shock Absorbers (Coaches)

Make.....Arvin
Color.....Black
Piston Diam. ..... 1 5/8 inch
Collapsed length..... 14.16 inches
Extended length……22.44 inches

Front I-Beam axle shock absorbers

Make.....Sachs
Color..... Black
Ext. Diam.....75 mm
Collapsed length..... 15.51" (394 mm)
Extended length ..... 24.37" (619 mm)

Drive and tag axle shock absorbers

Make.....Sachs
Color..... Black
Ext. Diam.....75 mm
Collapsed length..... 15.51" (394 mm)
Extended length ..... 24.37" (619 mm)

Height control valve (IFS)

Quantity used 1

Prevost number.....Refer to Parts Manual

Height control valve (coach, all axles & VIP, rear only)

Quantity.....2 or 3

Prevost number.....Refer to Parts Manual

Bellows control and exhaust solenoid valve assembly

Make..... Norgren

Coil

Voltage ..... 24 V DC

Current draw..... 29 amperes

Valve (3-way, 2 positions)

Type ..... N/C

Type ..... N/O

Radius rod bushing

Make..... Prevost

Prevost number ..... Refer to Parts Manual

Sway bar bushing (Independent Front Suspension

Make..... Prevost

Prevost number ..... Refer to Parts Manual

Sway bar bushing (Front Axle)

Make..... Prevost

Prevost number ..... Refer to Parts Manual

Sway bar bushing (Drive Axle)

Make..... Prevost

Prevost number ..... Refer to Parts Manual

Sway bar link bushings

Prevost number ..... Refer to Parts Manual

Shock absorber bushings

Prevost number ..... Refer to Parts Manual

High-Buoy Pressure regulator

Recommended pressure setting ..... 90 psi (621 kPa)

Prevost number ..... Refer to Parts Manual

CONTENTS

1. TORQUE TABLES 5

2. VEHICLE EXTERIOR 7

3. VEHICLE JACKING POINTS 9

4. TOWING THE VEHICLE 10

4.1 LIFTING AND TOWING 11
4.2 TOWING WITHOUT LIFTING 11
4.3 VOLVO I-SHIFT ALTERNATE TOWING MODE 12

5. STRUCTURE 12

5.1 WELDING 12

6. EXTERIOR MAINTENANCE 13

6.1 CORROSION PREVENTION 13
6.2 PREVENTIVE MAINTENANCE SCHEDULE 14
6.3 RUST INHIBITOR APPLICATION 15

7. FIBERGLASS REPAIR 19

7.1 REPAIR USING FIBERGLASS CLOTH 20
7.2 REPAIR USING FIBERGLASS PASTE 20
7.3 TYPICAL FIBERGLASS REPAIR PROCEDURE 21

8. PAINTING 22

8.1 NEW PAINT CARE 22
8.2 PAINT TOUCHUP 22
8.3 PAINTING 22
8.3.1 Safety 23
8.3.2 Surface Preparation and Paint Application 23
8.4 FRONT AND REAR BUMPERS 24
8.4.1 Paint touchup and surface preparation for vehicles equipped with urethane bumpers 24

9. FRONT AND REAR BUMPERS 24

9.1 FRONT BUMPER REMOVAL AND INSTALLATION 24
9.1.1 Front Bumper Removal 24
9.1.2 Front Bumper Skin Removal 24
9.1.3 Front Bumper Assembly Removal including spare wheel compartment door. 25
9.2 FRONT BUMPER LICENSE PLATE SUPPORT INSTALLATION 25
9.3 REAR BUMPER REMOVAL AND INSTALLATION 25

10. COACH ENTRANCE DOOR 26

10.1 OPERATION 26
10.2 EMERGENCY EXIT VALVES 26
10.2.1 Without Air and/or Without Electricity 27
10.2.2 With Air but Without Electricity 27
10.3 DOOR CYCLE SPEED ADJUSTMENT 27
10.4 HORIZONTAL AND VERTICAL ADJUSTMENT 28
10.5 DEPTH ADJUSTMENT 29
10.6 ROD END ADJUSTMENT 29
10.7 LUBRICATION 29

10.8 TROUBLESHOOTING 30

11. ENTRANCE DOOR (V.I.P) 31

11.1 KEYLESS ENTRY SYSTEM 31
11.2 DOOR ADJUSTMENT 31
11.2.1 Horizontal and Vertical Adjustments 31
11.3 DEPTH ADJUSTMENT 31
11.4 DOOR LOWER SECTION 32
11.5 REFLECTOR STRIPE INSTALLATION 32
11.6 DOOR SEAL REPLACEMENT 32
11.7 DOOR LUBRICATION 33
11.8 DOOR LATCH MECHANISM 33

12. DRIVER'S POWER WINDOW 33

12.1 POWER WINDOW REMOVAL 33
12.2 POWER WINDOW INSTALLATION 34

13. ROOF ESCAPE HATCH 34

13.1 REPAIR 34
13.2 SEALING 35
13.3 ESCAPE HATCH PANEL ASSEMBLY 35
13.4 ESCAPE HATCH FRAME 35

14. REPAIR OR REPLACEMENT OF "TARABUS" FLOOR COVERING 36

14.1 FRONT STEPS REPLACEMENT PROCEDURE 38
14.2 WELDING OF JOINT BETWEEN WHITE SAFETY STRIP AND "TARABUS" FLOOR COVERING 41
14.3 REPAIR OF A WELDED JOINT 42

15. PASSENGER SEATS 43

15.1 ROTATING SEATS 43
15.2 REMOVING FIXED SEATS 43
15.3 UPHOLSTERY MAINTENANCE 44
15.3.1 Routine Cleaning 44
15.3.2 Dry Cleaning 44
15.3.3 Cleaning With Covers in Place 44

16. COACH SIDE WINDOWS 45

16.1 EMERGENCY EXIT WINDOWS 45
16.2 EMERGENCY EXIT RELEASE BAR 45
16.2.1 Emergency Exit Window Adjustment 46
16.3 FIXED WINDOW REPLACEMENT 46
16.4 EMERGENCY EXIT WINDOW REPLACEMENT 46
16.5 TRAPEZOIDAL WINDOW REPLACE-MENT 47
16.6 SMALL REAR WINDOWS REPLACEMENT 47
16.7 ADHESIVE-MOUNTED WINDOWS 47
16.7.1 Glass Window Replacement 47

17. ELECTRIC AWNING WINDOW 49

17.1 OPERATION 49
17.2 WINDOW REMOVAL 49
17.3 ACTUATOR REPLACEMENT 51
17.4 MOTOR REPLACEMENT 51

18. ELECTRIC SLIDING WINDOW 53

19. WINDSHIELD 56

19.1 REMOVAL 56
19.2 WINDSHIELD INSTALLATION ONLY 56
19.3 INSTALLATION OF RUBBER EXTRUSION AND WINDSHIELD 58

20. BODY PANELS AND DOORS 58

21. WHEELCHAIR LIFT ACCESS DOOR 59

21.1 INSTALLATION 59
21.2 ADJUSTMENT 59

22. BAGGAGE COMPARTMENT DOORS 63

22.1 PANTOGRAPH ADJUSTMENT 63

23. DOOR HANDLES 64

24. ENGINE COMPARTMENT DOOR 64

24.1 ENGINE DOOR ADJUSTMENT 65
24.2 MINOR TOP EDGE DEPTH ADJUSTMENT 65
24.3 MINOR LOWER EDGE DEPTH ADJUSTMENT: 65

25. ENGINE AIR INTAKE GRILL 65

26. RADIATOR DOOR ADJUSTMENT 66

26.1 DOOR HEIGHT ADJUSTMENT 66
26.2 DOOR LATERAL ADJUSTMENT 66
26.3 DOOR DEPTH ADJUSTMENT 66

27. CONDENSER DOOR ADJUSTMENT 67

28. FUEL FILLER DOOR 68

29. FRONT SERVICE COMPARTMENT 68

29.1 LATCH MECHANISM ADJUSTMENT 69

30. ENGINE COMPARTMENT R.H. SIDE DOOR 69

30.1 LATCH MECHANISM ADJUSTMENT 70

31. EVAPORATOR DOOR ADJUSTMENT 70

31.1 LATCH MECHANISM ADJUSTMENT 70

32. MAIN POWER COMPARTMENT 71

32.1 LATCH MECHANISM ADJUSTMENT 71

33. FENDERS 71

33.1 REAR FENDER REMOVAL 71
33.2 FRONT FENDER REMOVAL 72

34. REAR CAP 72

35. FRONT CAP 72

36. SIDE PANEL INSTALLATION PROCEDURE FOR COACHES AND VIP 73

37. REAR VIEW MIRRORS (RAMCO) 78

37.1 ADJUSTMENT 78
37.2 DISASSEMBLY 78
37.3 ASSEMBLY 78
37.4 REPLACEMENT OF MIRROR GLASS 78
37.5 HEATED / REMOTE CONTROLLED REAR VIEW MIRRORS 79
37.5.1 Mirror Control 79
37.5.2 Disassembly 79
37.5.3 Assembly 79
37.5.4 Convex & Flat Mirror Removal 79

SPECIFICATIONS 80

1. TORQUE TABLES

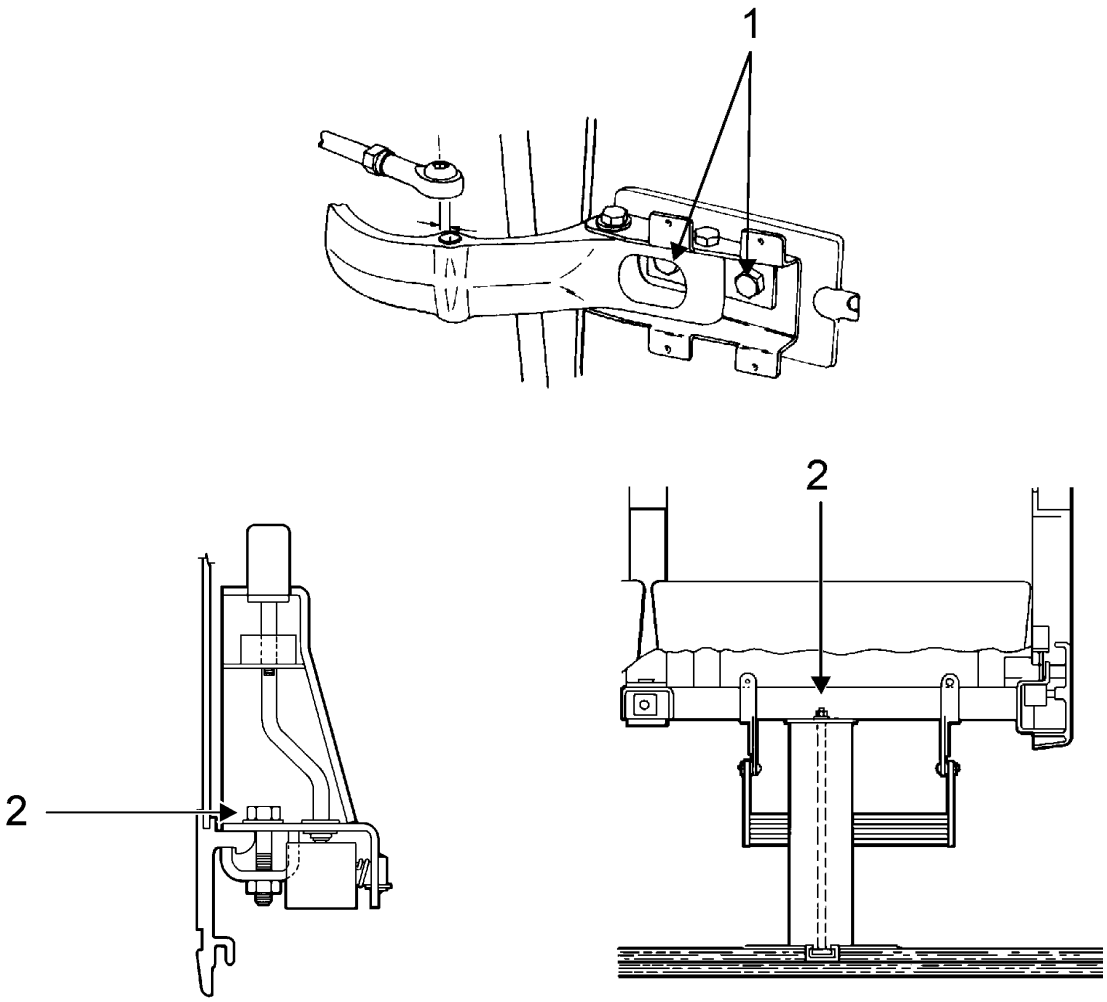

BODY		
No	DESCRIPTION	TORQUE
1	Entrance door horizontal adjusting bolts	55-65 lb-ft (75-88 Nm)
2	Passenger seat mounting nuts (to sidewall and pedestal)	27 lb-ft (37 Nm)

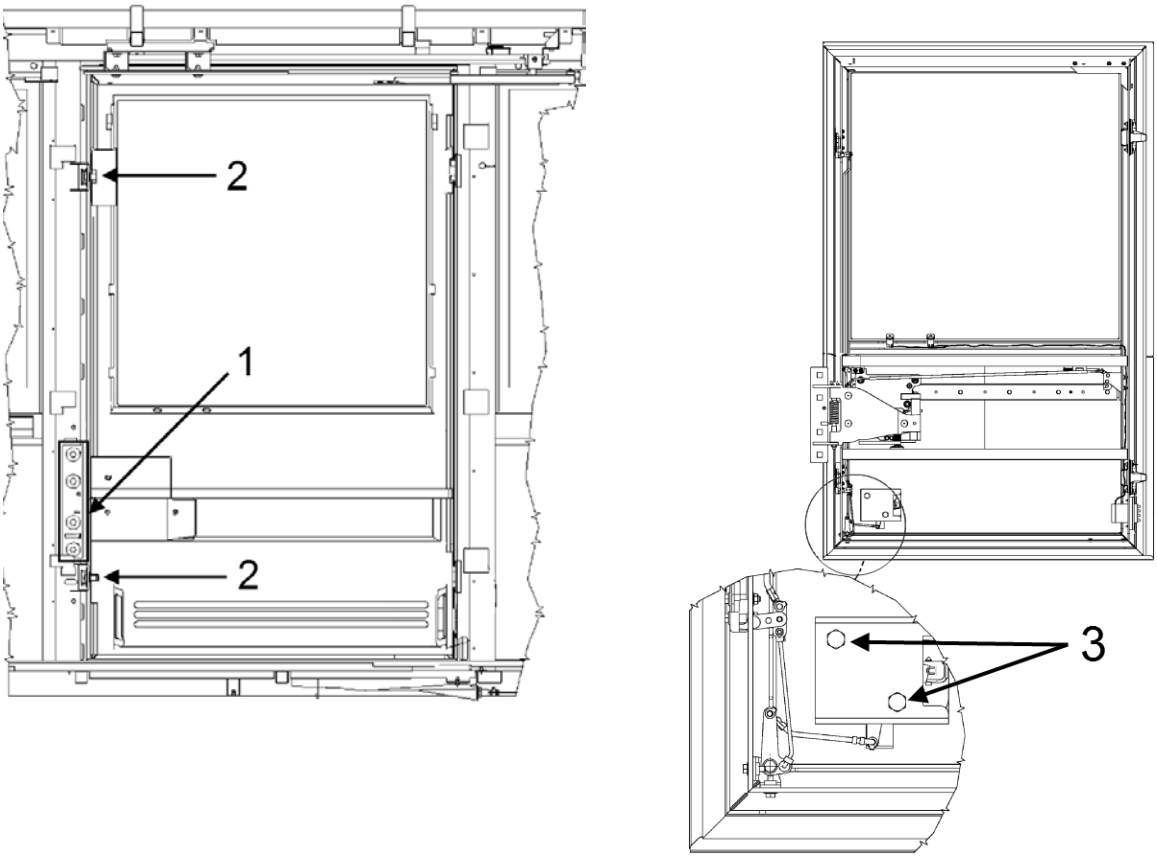

WHEELCHAIR LIFT DOOR		
No	DESCRIPTION	TORQUE
1	Wheelchair lift door – Center hinge bolts	31-38 lb-ft (42-52 Nm)
2	Wheelchair lift door - striker pin adjustment bolts	54-66 lb-ft (73-89 Nm)
3	Wheelchair lift door - opening mechanism nuts	2.5-3.5 lb-ft (3.39-4.75 Nm)

2. VEHICLE EXTERIOR

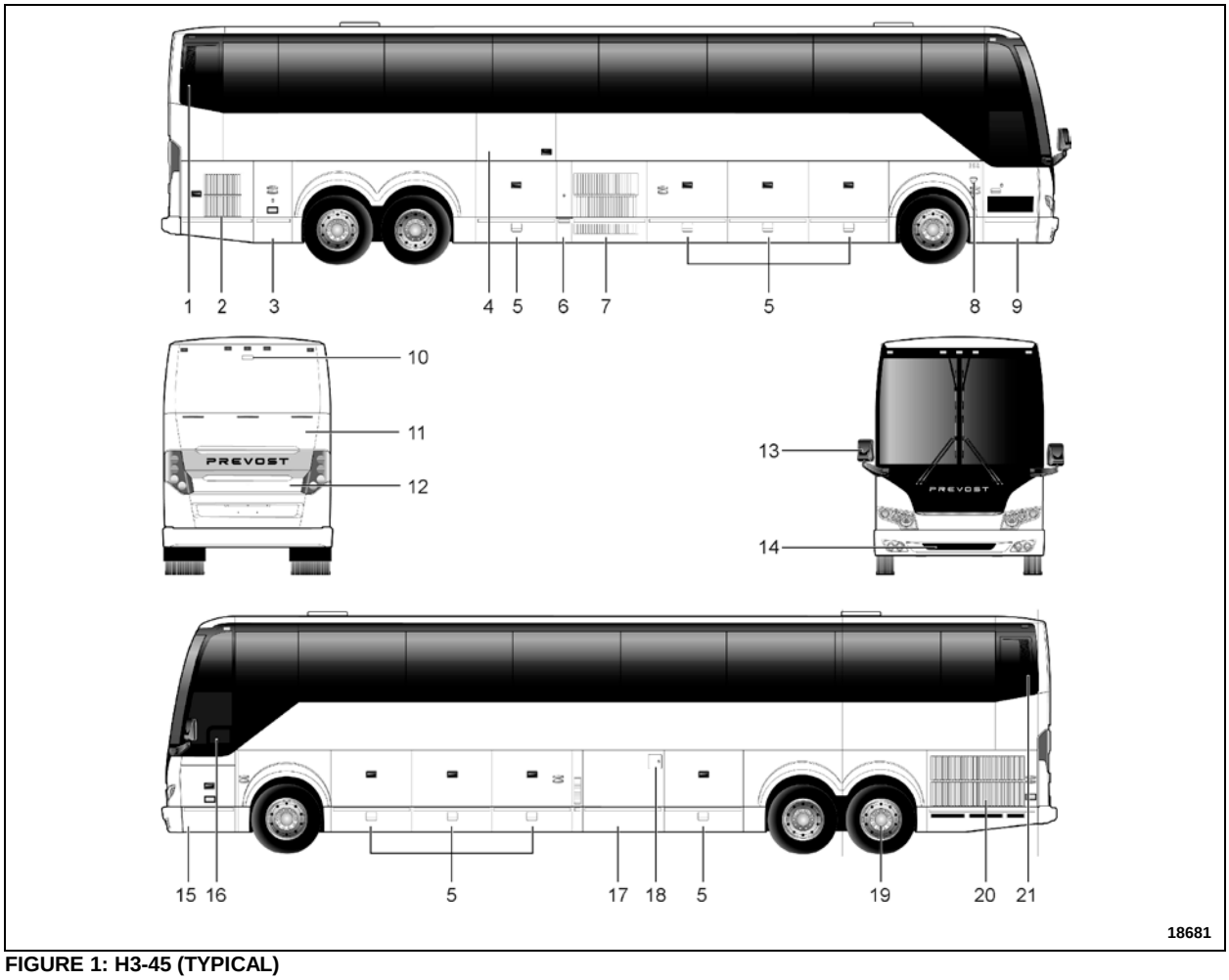

FIGURE 1: H3-45 (TYPICAL)

1. Engine air intake
2. Engine compartment curb-side door
3. Main power compartment (battery compartment)
4. Wheelchair access door (optional Ricon lift)
5. Baggage compartment
6. Fuel filler neck and diesel exhaust fluid (DEF) filler neck access door
7. Condenser compartment
8. Entrance door control switch
9. Entrance door
10. Back up camera (optional)
11. Diesel Particulate Filter (DPF) access door
12. Engine compartment rear door
13. Rear-view mirror
14. Spare wheel compartment
15. Front electrical and service compartment
16. Driver's power window
17. Evaporator compartment
18. Fuel filler neck access door
19. Tag axle
20. Radiator door
21. SCR catalytic converter access door

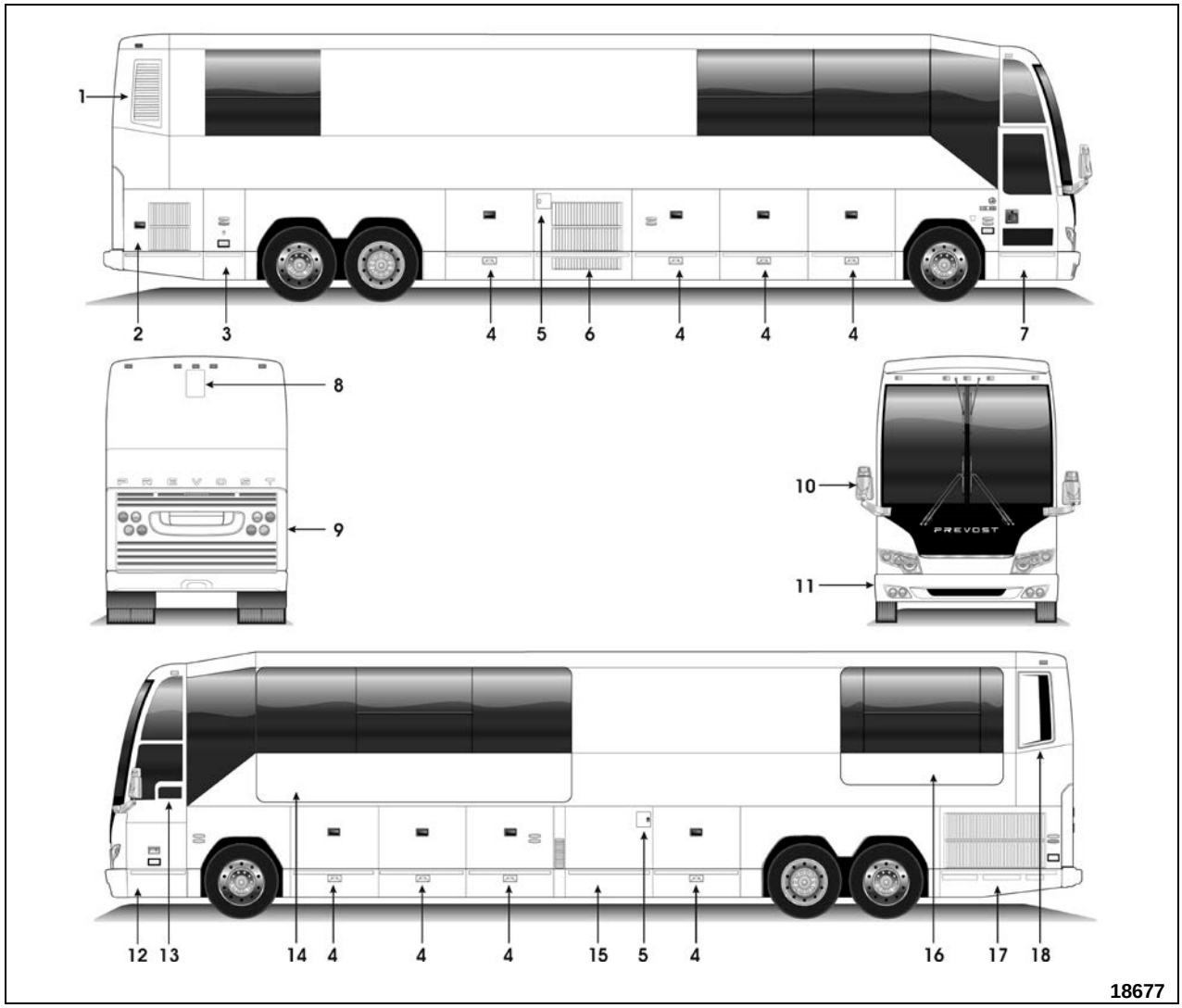

FIGURE 2: H3-45 VIP EXTERIOR VIEW

1. Engine air intake
2. Engine R.H. side access door
3. Main power compartment
4. Baggage compartment
5. Fuel filler door
6. A/C condenser compartment or baggage compartment
7. Entrance door
8. Retractable back up camera (optional)
9. Engine compartment rear door
10. Rear-view mirrors

11. Reclining bumper compartment
12. Front electrical and service compartment
13. Driver's power window
14. Front Slide-out
15. Heating, ventilating and air conditioning compartment (HVAC) or baggage compartment
16. Rear Slide-out
17. Engine radiator door
18. Diesel Particulate Filter (DPF) compartment access door

3. VEHICLE JACKING POINTS

The vehicle can be lifted by applying pressure under body jacking points or front and drive axle jacking points (from Figure 4 to Figure 11). When it is necessary to lift the vehicle, care should be taken to ensure that the pressure is applied only on the specified areas. Equipment for lifting the front of the vehicle must have a combined lifting capacity of at least 20,000 lb. (9 100 kg).

Equipment for lifting the rear of the vehicle must have a combined lifting capacity of at least 40,000 lb. (18 200 kg).

WARNING

DO NOT tow or jack vehicle with people on board.

WARNING

When it is necessary to raise the vehicle, care should be taken to ensure that pressure is applied only at the points indicated in figures 79 up to 86.

WARNING

Extra lift capacity may be required if luggage or any other type of load (e.g. conversion equipment) are onboard the vehicle.

CAUTION

The suspension of the vehicle must be in the normal ride position before jacking. The "Level Low" system on a motorcoach must be in the "DRIVE" position prior to turning the ignition key "OFF".

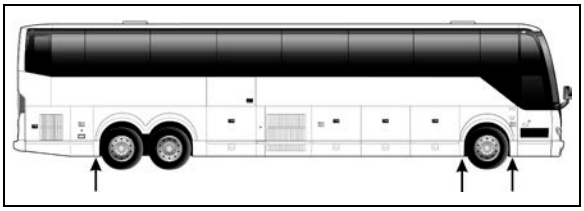

FIGURE 3: JACKING POINTS ON STRUCTURE 18480

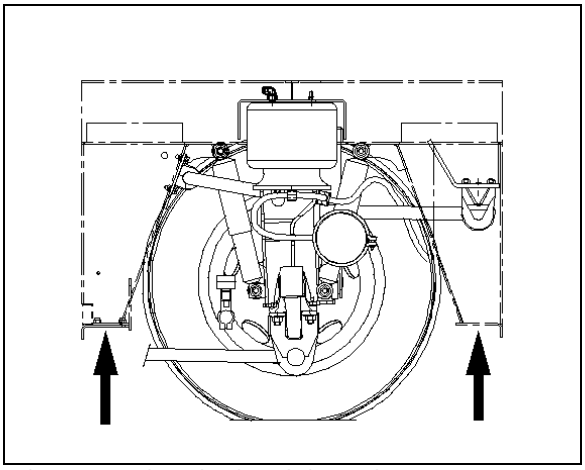

FIGURE 4: JACKING POINTS ON FRONT UNDERFRAME – I BEAM AXLE 16183

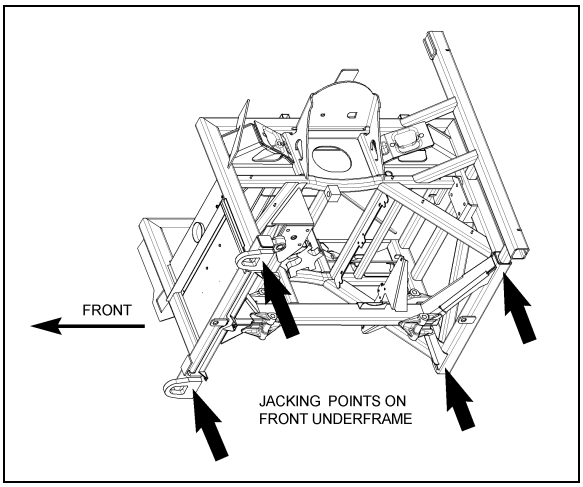

FIGURE 5: JACKING POINTS ON FRONT UNDERFRAME – IFS 18530

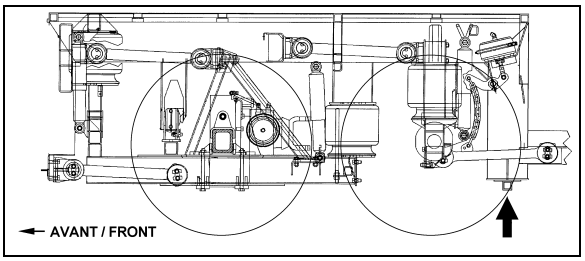

FIGURE 6: JACKING POINTS ON REAR FRAME

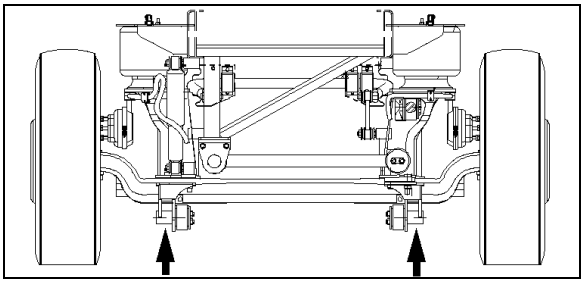

FIGURE 7: JACKING POINTS ON FRONT AXLE – I BEAM AXLE 10000

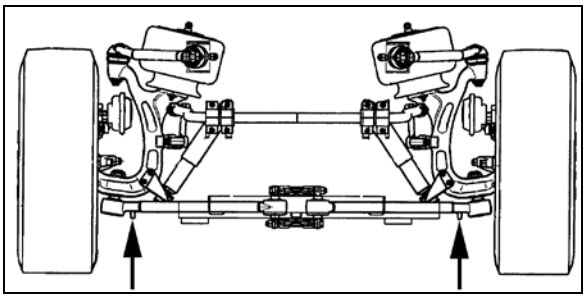

FIGURE 8: JACKING POINTS ON IND. SUSPENSION

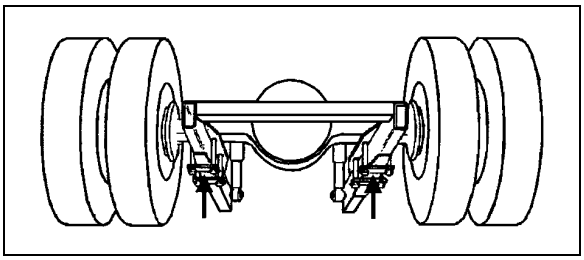

FIGURE 9: JACKING POINTS ON DRIVE AXLE 18085

CAUTION

Always unload or retract the tag axle before jacking the vehicle from the front and drive axle jacking points to prevent damage to suspension components.

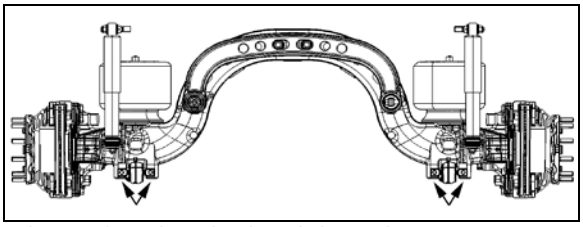

FIGURE 10: JACKING POINTS ON TAG AXLE

WARNING

The jacking points on the tag axle must be used for raising the tag axle only.

4. TOWING THE VEHICLE

The vehicle can be transported on a low bed semi-trailer of adequate gross axle weight capacity. When transporting a vehicle, apply parking brake and shut down the engine. Block all wheels and secure vehicle with tie-downs. Check that overall height will clear obstacles on the route to follow, and obtain required permits.

The vehicle can also be towed by lifting the front axle or by towing from the front with all wheels on the ground. These two methods are described below under their respective headings. Whatever the method used, the vehicle should be towed by truck operators authorized and experienced in towing highway coaches.

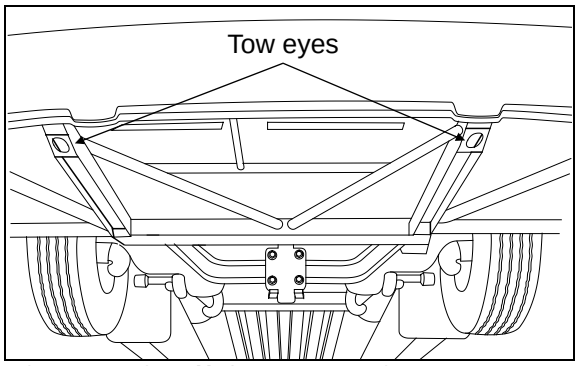

FIGURE 11: TOW EYES UNDER VEHICLE 18401

Observe normal precautions including, but not limited to, the ones listed below when towing the vehicle:

- Make sure the parking brake is released before towing.
- Do not allow passengers to ride onboard the towed vehicle.
- Tow the vehicle at a safe speed as dictated by road and weather conditions.
- Accelerate and decelerate slowly and cautiously.

4.1 LIFTING AND TOWING

The towed vehicle must be lifted from under the front axle only. The tow truck must be equipped with the proper lifting equipment to reach under the front axle since no other lifting points are recommended. Lifting and towing from any other point are unauthorized as it may cause serious damage to the structure. Do not unload or raise the tag axle when lifting and towing to prevent overloading the drive axle.

1. Remove both drive axle shafts to prevent damage to the transmission. Plug axle tube to prevent oil loss. Refer to Rockwell's *"Maintenance manual no.5"* annexed at the end of Section 11, Rear axle, in this manual for correct procedure.

CAUTION

Transmission lubrication is inadequate when towing. With automatic, semi-automatic or manual transmission, the drive axle shafts must be removed to avoid serious damage to the transmission.

2. Operate the engine when towing to maintain brake system air pressure. If the engine cannot be operated, connect an external air pressure line from the tow truck to the emergency fill valve in the engine compartment. The emergency fill valve in the front service compartment does not supply air pressure to the brake system. The air pressure must be a minimum of 75 psi (520 kPa), and the line should be attached to the air line with a clip-on chuck.

CAUTION

Do not tow the vehicle without external air pressure applied to the emergency fill valve if the engine does not operate. Without brake system air pressure, the brakes may apply automatically if system air drops below 40 psi (275 kPa). If failure prevents releasing the parking brakes with air pressure, disengage the parking brakes mechanically.

3. Lift the vehicle from under the front axle, and adequately secure the underside to the tow vehicle lifting attachment with chains.
4. Observe safety precautions when towing.

4.2 TOWING WITHOUT LIFTING

CAUTION

When towing vehicle without lifting, use only a tow truck with a solid link tow bar and related equipment. All other means of towing are unauthorized. Tow only from the front of the vehicle.

1. Remove both drive axle shafts to prevent damage to the transmission. Plug axle tube to prevent oil loss. Refer to Rockwell's *"Maintenance manual no.5"* annexed at the end of Section 11, Rear axle, in this manual for correct procedure.

CAUTION

Transmission lubrication is inadequate when towing. With automatic, semi-automatic or manual transmission, the drive axle shafts must be removed to avoid serious damage to the transmission.

2. Operate the engine when towing to maintain brake system air pressure. If the engine cannot be operated, connect an external air pressure line from the tow truck to the emergency fill valve in the engine compartment. The emergency fill valve in the front service compartment does not

supply air pressure to the brake system. The air pressure must be a minimum of 75 psi (520 kPa), and the line should be attached to the air line with a clip-on chuck.

CAUTION

Do not tow the vehicle without external air pressure applied to the emergency fill valve if the engine does not operate. Without brake system air pressure, the brakes may apply automatically if system air drops below 40 psi (275 kPa). If failure prevents releasing the parking brakes with air pressure, disengage the parking brakes mechanically.

3. Position the tow truck so that the tow bar contacts the front bumper of the vehicle.
4. Attach the tow truck chains only in the tow eyes of the vehicle under the bumper and take up all the slack.
5. Attach safety chains as applicable.
6. Observe safety precautions when towing.

4.3 VOLVO I-SHIFT ALTERNATE TOWING MODE

If the standard towing procedure can't be followed due to road condition or local road regulations (tunnels, bridges, etc), follow the alternate procedure described below.

CAUTION

This procedure applies only to coaches with **D series** Volvo **I-Shift** transmissions **(AMT-D)** provided with alternate towing mode software.

Forward towing only! Reverse towing (backing-up) is not allowed with this procedure or damage to the gearbox will occur.

CAUTION

This procedure should not be used in replacement of the standard towing procedure.

This procedure does not have any indicator, therefore, if any of the steps below are not fulfilled, transmission damage may occur.

Applying the procedure will allow tow mode to be activated and vehicle to be towed without the removal of the driveshaft for whatever distance the vehicle needs to be towed.

Towing gear **3 HR** will be engaged if conditions below are fulfilled in the following sequence:

A. *Ignition key must be in the "ON" position*

B. *Engine not running*

C. *Adequate air pressure to the gearbox/ Vehicle must have electrical power*

D. *Shift pad must be in neutral*

E. *Vehicle must be towed FORWARD only*

5. STRUCTURE

The body of the H3-41, H3-45 and VIP vehicles is an integral structure made of 14, 16 and 18 gauge welded and braced high tensile steel and stainless steel members. The roof arches are made with cold rolled, electrically welded (CREW) steel tubes, 1 ½" x 2" x 14 gauge. The inside is filled with urethane foam and the exterior is primed. The front subframe is made of open sections of high-strength steel alloy. These open sections permit a better application of primer and undercoating, and does not trap moisture. The rear subframe is made of closed sections of high tensile steel sealed at both ends.

5.1 WELDING

Since welding is a procedure that may be carried out either as specific instructions from Prevost or by an independent decision of the owner, the following information pertaining to welding should be read before beginning any welding procedure. The prohibitions and requirements outlined below must be followed during welding procedure:

1. Welding must be done only by a qualified and experienced person.
2. Adequate ground contacts and shields must be positioned as required to protect components from damage due to heat, contact by weld splatter, arcing, or other potentially damaging events associated with welding.
3. The following precautions are to be taken to protect the electronic control components. Refer to Section 00, paragraph 3, "*PRECAUTIONS TO BE OBSERVED BEFORE WELDING*" in this manual.
4. Always wear the appropriate safety equipment.

Weld in clean and well-ventilated area, and always have an appropriate fire extinguisher within your reach

6. EXTERIOR MAINTENANCE

Regular washing to remove dust and dirt is recommended. See *"Operator's Manual"* or *"Owner's Manual"* for more details on washing and cleaning your vehicle.

6.1 CORROSION PREVENTION

Preventive maintenance is a key factor in avoiding corrosion and must be considered as part of the regular service intervals. The entire underbody of the vehicle is sprayed with a heavy application of asphalt base undercoating.

The operating environment the vehicle is subjected to will largely influence the amount of dirt and corrosion that will accumulate over a given period. Corrosion is one of the most costly factors of part failure and shortened part life. It is, however, an item that can be controlled when it is conscientiously looked after and the proper steps are taken in a timely manner.

Certain areas of the coach are more vulnerable to corrosion than others, and it is these areas that should be addressed. For example, the rear baggage compartment bulkhead in the rear wheelhousing area contains many key components and should be examined regularly for corrosion. Other areas include the front wheelhousing area and the engine compartment.

Road splash will affect understructure, condenser coil and engine compartment. These areas must be thoroughly cleaned to remove dirt accumulations from flanges, channels and ledges. These places accumulate dirt and salt and hold it in direct contact with steel and aluminum surfaces. Use an understructure high pressure spray as part of a regular wash. Damaged undercoating or paint should be promptly repaired before corrosion can start.

Frequency of wash periods depends on operating conditions. During periods of exposure to salt, daily washing as described above is recommended. If underbody parts show evidence of rust or corrosion, treat as follows:

1. Remove dirt, grease and oil by solvent washing.
2. Remove corrosion as well as all loose coating by cleaning with a wire brush or sandblasting.

CAUTION

Sandblasting can be used for cleaning bulkheads, brackets and other structural members. It should not be used for exterior side paneling. Extreme care should be taken not to sandblast excessively.

3. Apply correct primer, paint and undercoating after removing all corrosion to prevent further damage.

6.2 PREVENTIVE MAINTENANCE SCHEDULE

NOTE
TECTYL 185 GW rust inhibitor may have been applied on your vehicle underbody as an option, if this is the case, follow this procedure thoroughly. For future application of product, refer to paragraph 3.3 in this section.

DESCRIPTION	INTERVALS		MAINTENANCE	CORRECTIVE ACTION	REFERENCE
	MONTHS	KM MILES			
BODY, EXTERNAL WINDOW FRAME	6	40 000 25 000	VISUALLY INSPECT SEALING BEADS CONDITION	REPAIR OR REPLACE SEALING BEADS IF NECESSARY	
VEHICLE UNDERBODY	12	100 000 60 000	USE A LOW PRESSURE SPRAY TO CLEAN UNDER-STRUCTURE AND VISUALLY INSPECT FOR CALCIUM DEPOSIT, CORROSION OR ANY DIRT ACCUMULATED ONTO EXPOSED SURFACES. VISUALLY INSPECT SEALING BEADS CONDITION. VISUALLY INSPECT IF UNDERFLOOR IS PEALING. VISUALLY INSPECT WHEELHOUSING COATING. MAKE SURE DISCHARGE TUBES ARE FREE FROM OBSTRUCTIONS	APPLY UNDERCOATING LOCALLY AS NECESSARY. APPLY UNDERCOATING LOCALLY AS NECESSARY REMOVE ANY OBSTRUCTION OR REPLACE DEFECTIVE TUBE	
SUSPENSION AND UNDERSTRUCTURE	12	100 000 60 000	VERIFY THE CONDITION OF ALL SUSPENSION AND UNDERSTRUCTURE FASTENERS AND CLAMPS	TIGHTEN OR REPLACE DEFECTIVE OR MISSING FASTENERS	
FLOOR COVERING	3	20 000 12 500	VISUALLY INSPECT IF FLOOR COVERING IS SHOWING SIGNS OF DETERIORATION SUCH AS CUTS, BURNS, ETC. ALSO, VISUALLY INSPECT SEALANT ALONGSIDE TRACKS. INSPECT WALL PANELS FROM BOTTOM TO WINDOWS	REPAIR OR REPLACE DEFECTIVE COVERING. MAKE SURE PROPER SEALANT IS USED.	
FLOOR CLEANING			CLEAN FLOOR COVERING AS NECESSARY		

WARNING

Failure to follow this preventive maintenance schedule will result in warranty void.

6.3 RUST INHIBITOR APPLICATION

Material: Tectyl 185 GW
R1KG21

Safety Rules: Use safety glasses
Supplied air hood
Solvent-resistant rubber gloves

1.0 Wash both wheelhousing mechanical parts before masking.	A water-hose nozzle is recommended. Water may be hot to reduce washing time especially during winter. If parts are soiled with oil, clean using R1KG21. Avoid rubber parts.
2.0 Dry all water sprayed parts. Surface temperature and dew point must be respected before applying rust inhibitor.	Air pressure system may be used, refer to annex 1 for surface temperature and dew point.
3.0 **Front wheelhousing** a) Mask all rubber joints. Braking system must also be protected (refer to arrows). Commercial aluminum foil may be used for masking.	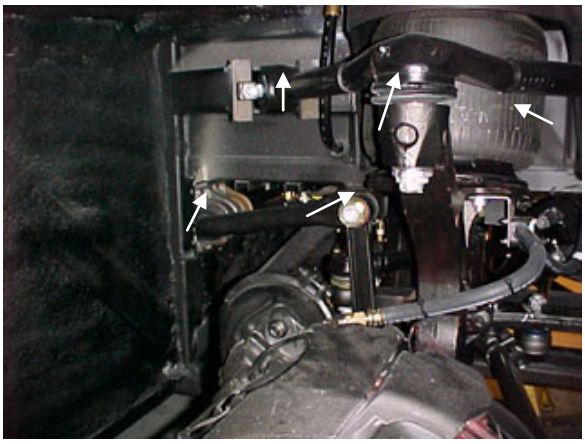
3.1 **Front wheelhousing** Front view	

3.2 **Front wheelhousing**	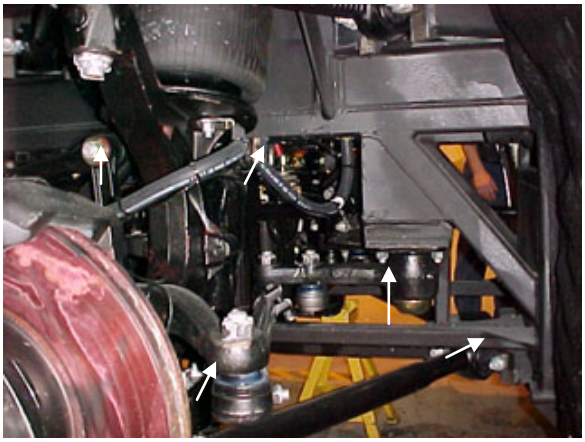
3.3 **Front wheelhousing** (Entire braking system)	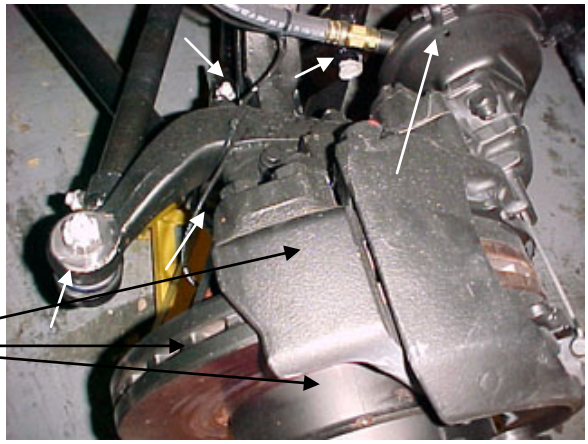
4.0 **Rear wheelhousing** a) Mask all rubber joints. Braking system must also be protected (refer to arrows). Commercial aluminum foil may be used for masking (Entire braking system)	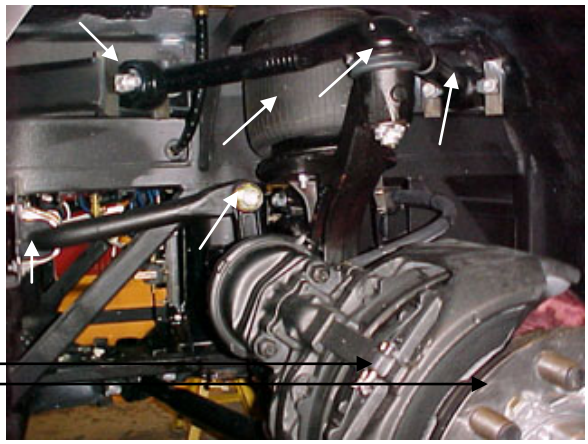

4.1 **Rear wheelhousing** (Entire braking system)	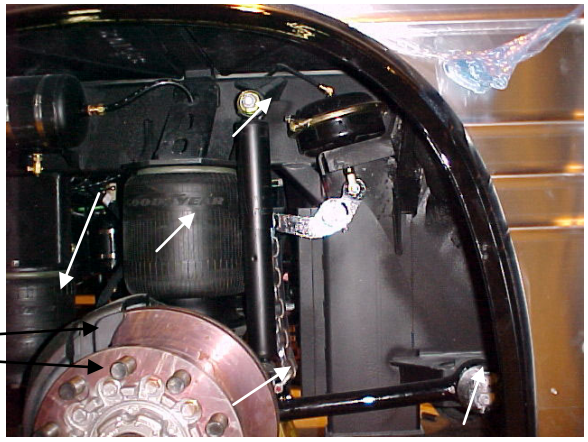

4.2 **Rear wheelhousing** (Entire braking system)	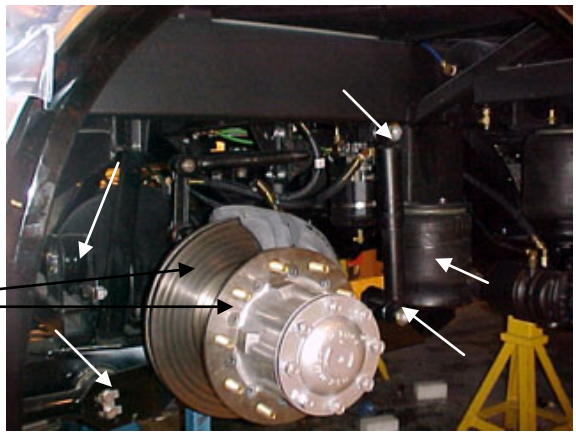
4.3 **Rear wheelhousing**	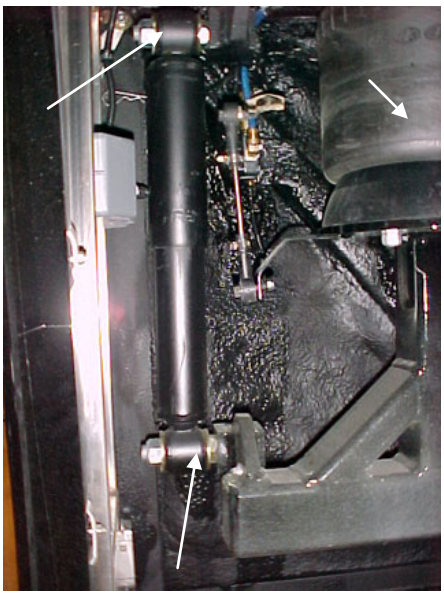
5.0 Close off wheelhousing using masking paper.	Prevent rust inhibitor from coming in contact with paint. To close off wheelhousing, a polythene sheet may be used.

6.0 Apply TECTYL 185 GW black rust inhibitor onto wheelhousing mechanical parts.	A spray gun and pumping system are required to apply the rust inhibitor. If the application is done inside a paint room, select high speed ventilation. **Minimum required thickness is 10 mils wet or 5 mils dry**.
7.0 Remove all masking material 30 minutes after application.	

ANNEX 1

1. Check and confirm that dew point and surface temperature are in accordance with to the following criteria:

   Surface temperature > 10°C

   Surface temperature > or = to dew point + 3°C

NOTE
Use the following table to determine dew point.

2. Check and confirm that TECTYL temperature is between 10°C and 35°C.

	DEW POINT									
	Relative Humidity (%)									
	10	20	30	40	50	60	70	80	90	100
Temp (c)										
0	---	-16	-11	-8	-5	-3	-1	0	1	3
1	---	-15	-10	-7	-5	-3	-1	1	2	4
2	---	-14	-10	-6	-4	-1	0	2	3	5
3	---	-13	-9	-5	-3	-1	1	2	4	6
4	---	-13	-8	-5	-2	0	2	4	5	7
5	---	-11	-7	-4	-1	1	3	5	6	8
6	---	-11	-8	-3	0	2	4	6	7	9
7	-18	-10	-6	-2	0	2	5	6	8	10
8	-17	-9	-5	-1	1	4	6	7	9	11
9	-16	-9	-4	-1	2	4	6	9	10	12
10	-16	-8	-3	0	3	5	7	10	11	13
11	-15	-7	-3	1	4	6	9	10	12	14
12	-14	-6	-1	2	5	7	10	11	13	15
13	-14	-6	-1	2	6	8	10	12	14	16
14	-13	-5	0	4	6	9	11	14	15	17
15	-12	-4	1	4	7	10	12	14	16	18
16	-11	-4	1	5	9	11	13	15	17	19
17	-10	-3	2	6	9	12	14	16	18	20
18	-10	-2	3	7	10	13	15	17	19	21
19	-9	-1	4	8	11	14	16	18	20	22
20	-9	0	5	9	12	15	17	19	21	23
21	-8	0	5	10	13	16	18	20	22	24
22	-7	1	6	11	14	16	19	21	23	25
23	-6	2	7	11	15	17	20	22	24	26
24	-6	2	8	12	16	19	21	23	25	27
25	-5	3	9	13	16	20	22	24	26	28
26	-4	4	10	14	17	20	23	25	27	29
27	-4	5	11	15	19	21	24	26	28	30
28	-3	6	11	16	19	22	25	27	29	31
29	-2	6	12	17	20	23	26	28	30	32
30	-1	7	13	17	21	24	27	29	31	33
31	-1	8	14	19	22	25	27	30	32	34
32	0	9	15	20	23	26	29	31	33	35

7. FIBERGLASS REPAIR

All repairs to fiberglass parts consist of filling the damaged area with fiberglass cloth and resin or strand fiberglass and resin. The repair is allowed to harden, and then finishing operations may be performed. Use of the various materials is determined by the type of repair to be made. Large holes, torn sections and separate joints require the adhesive qualities of the resin and the reinforcing qualities of the fiberglass.

Small dents, scratches or pits can be repaired using resin and strand fiberglass and filler mixed into paste. Instructions for either mix are explained under their respective headings in this section. For best results when making repairs, temperature should be between 70 and 75 ^{o}F (21-24 ^{o}C). Some people experience a skin reaction to resins. In such cases, wipe resin off with denatured alcohol or a good thinner. Use of protective hand cream is recommended.

WARNING

Always wear a respirator and goggles when grinding or sanding.

Extreme care must be taken if the sander is electrically operated, as dust from some resins is combustible when subjected to sparks or open flames. The proper tool for sanding resin is a low speed, air driven disc sander with a water attachment or a dry sander having a vacuum bag. Either will eliminate flying glass and resin dust.

The following additional tools and materials will assist in making repairs: hacksaw blade, assorted files, emery paper or cloth (150 or finer), scissors or tin snips, wax paper or cellophane sheets, a 3" (75 mm) paint roller, paint brush, putty knife, acetone and one or more heat lamps.

7.1 REPAIR USING FIBERGLASS CLOTH

Where necessary, sand paint away around damaged area and scrape away undercoating, if any, and wipe clean with solvent. Grind or file the damaged area to form a "V" at the broken or cracked portion. Sides of "V" should have a shallow pitch for maximum bonding area.

NOTE

Roughening the surface improves adhesion of resin.

If part is warped from original shape, use clamping equipment to straighten the surface. Preheat area to be repaired with one or two heat lamps placed 18 to 24 inches (450-610 mm) from repair.

CAUTION

Temperature should not exceed 140 ^{o}F (60 ^{o}C) during 30 minutes in order to avoid distortion.

Cut fiberglass cloth with scissors or tin snips, 1 to 3 inches (25-75 mm) larger than area to be repaired. Build area to desired height.

Mix resin and hardener following instructions on their containers. Saturate layers of fiberglass with mixture and place laminates over damaged area. Smooth out wrinkles and make sure general contour of area is maintained. Bubbles and wrinkles can be eliminated with a roller.

CAUTION

The pot life of the mix is approximately 15 minutes. Any accidental contamination to the skin, clothing, tools, etc. must be removed within this period. Use acetone to remove uncured resin.

Heat resin material again by placing heat lamps 18 to 24 inches (450-610 mm) from repaired area. Allow 12 to 15 minutes for repair to cure. After repair is cured, grind, file or sand to contour. Files other than body files may be more suitable. Featheredge and finish sanding.

If small pits or irregularities appear after making repair, correct by using a liberal amount of chopped strand or filler mixed with resin to form a paste. Refer to heading *"Repair with Fiberglass Paste"* in this section.

7.2 REPAIR USING FIBERGLASS PASTE

Fiberglass paste is used for repairing small dents, scratches, and pits. Paste is made by mixing resin, hardener and fiberglass strand or filler to the consistency of putty. Where necessary, sand paint away around damaged area. On underside of coach, scrape away undercoating from damaged area, and wipe clean with solvent.

Preheat the area to be repaired using heat lamps. Mix desired quantities of resin and hardener according to manufacturer's instructions. Add powdered fiberglass strand into mixture to thicken it into a putty state.

NOTE

If repair is made on a vertical surface, adding powdered filler material to mixture will reduce tendency of hot resin to flow or run.

Apply the material with a putty knife or similar object, building material up to the desired contour. For deep filling and on vertical surfaces, several layers of material may be used.

A hacksaw blade, held flat to adjacent contour and then moved in a sawing action across the repair when the resin is in a gel state, will remove excess resin from repair. Finish repair with the same procedure as when using fiberglass cloth.

7.3 TYPICAL FIBERGLASS REPAIR PROCEDURE

Remove all loose particles or damaged material using a power sander or rasp. Clean area, overlapping hole approximately 1" to 1-½" (25-40 mm) all around. Remove all dirt, grease and paint from area to ensure good bonding surface. Feather the cleaned area all around (Figure 12).

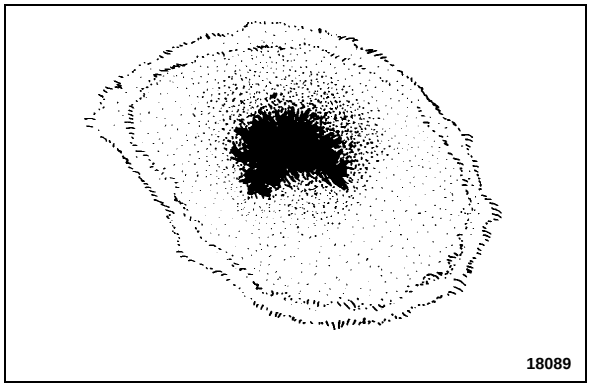

FIGURE 12: FIBERGLASS REPAIR

Cut a piece of fiberglass mat slightly larger than area being repaired. Impregnate mat with general purpose polyester resin catalyzed normally. Use a clean paint brush to apply the polyester resin. Apply impregnated mat over hole and press onto surface with brush to obtain good adherence. Another coat of general purpose polyester resin can be applied at this time (Figure 13).

NOTE
Remove all air between surfaces being joined. Allow area to harden and sand surface to remove any wax.

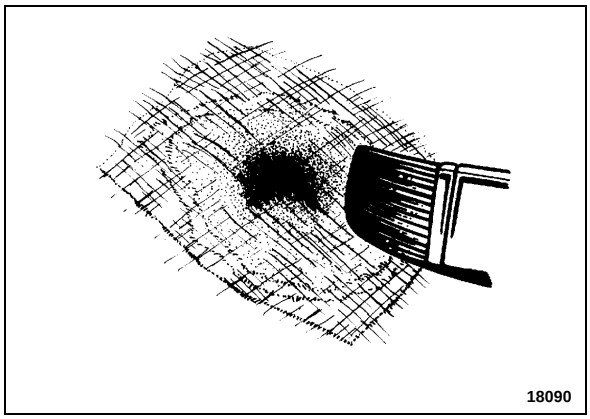

FIGURE 13: FIBERGLASS REPAIR

Apply another mat, followed by a cloth patch, and another mat. All layers must be thoroughly impregnated with polyester resin, brushed well and free of air. Apply more layers of mat and cloth as required until the desired strength and thickness is obtained, minimum two 1-½ oz (43 g) mats and one 9 oz (255 g) cloth (Figure 14).

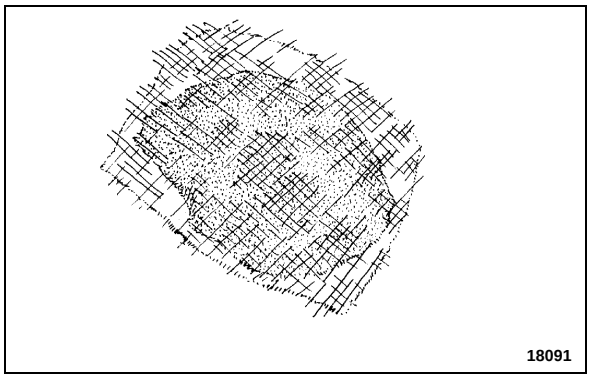

FIGURE 14: FIBERGLASS REPAIR

Allow area to harden and contour the area with coarse sandpaper #100 (Figure 15).

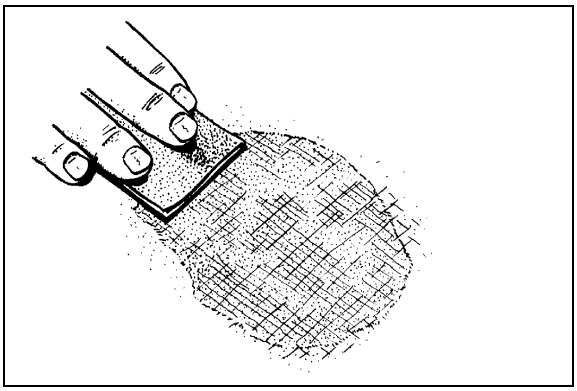

FIGURE 15: FIBERGLASS REPAIR 18092

Cover the area with a layer of resin putty and allow drying for approximately 15 to 20 minutes (FIGURE 16).

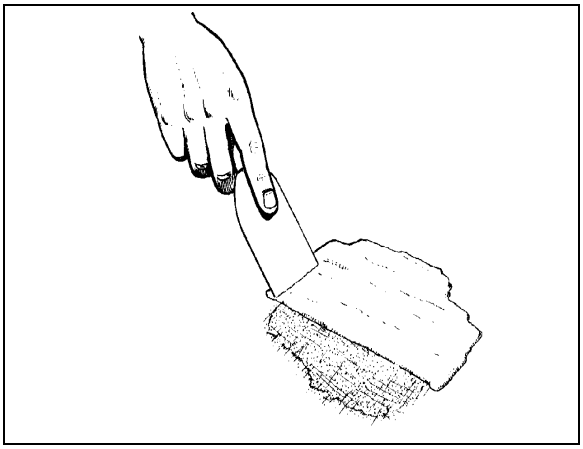

FIGURE 16: FIBERGLASS REPAIR 18093

Smooth off surface with coarse sandpaper #100 to desired shape. Further smooth surface with fine sandpaper #120 until repaired surface matches surrounding area paneling. Prime and paint the area to match surrounding paintwork.

8. PAINTING

8.1 NEW PAINT CARE

Our paint supplier recommends that you follow these simple precautions the first months of your new vehicle's life.

CAUTION

Apply these recommendations after repainting vehicle.

During the first 30 days:

- Do not use a commercial bus wash. Stiff brushes or sponges could mar the finish and damage the surface. Wash the vehicle by hand only and with cool water and a very mild bus wash solution. Be careful to use only a soft cloth or sponge;
- Wash vehicle in the shade, never in direct sunlight;
- Do not "dry wipe" vehicle –always use clean water. Dry wiping could scratch the finish;
- Avoid extreme heat and cold. Park vehicle in the shade whenever possible;
- Do not park under trees which drop sap or near factories with heavy smoke fallout. Tree sap and industrial fallout may mar or spot a freshly painted surface;
- Trees are also likely to attract birds. Bird droppings are highly acidic and will damage a freshly painted surface. Bird droppings, tree sap and industrial fallout should be washed off as soon as possible;
- Do not spill oil, gasoline, antifreeze, transmission fluid or windshield solvent on new finish. IMMEDIATELY rinse off any such spill with clean water, DO NOT WIPE;
- Do not drive on gravel roads. Paint finish easily chips during the first 30 days;
- Do not scrape ice or snow from the surface. A snow scraper can act like a paint scraper if the finish is new. Brush off loose material with a soft snow brush.

During the first 90 days:

- Do not wax or polish the vehicle. This will allow the finish to dry and harden completely.

8.2 PAINT TOUCHUP

When paint touchup or partial repainting is necessary, refer to the vehicle's paint scheme for color codes and paint brand.

Prevost recommends using the original paint brand to ease color matching.

In the event you sand through to the gelcoat surface you should prime the area with Standox "Non Stop Fill Primer (ST-11000)".

If you sand through to metal surface, first prime with Standox "Etch Primer (ST-11858)" then with Standox "Non Stop Fill Primer (ST-11000)".

CAUTION

Be sure to heed all paint manufacturer's recommendations, especially concerning paint dilution and application.

8.3 PAINTING

The standard paint used on the exterior of the vehicle is Standox Basislack. It is a high gloss polyurethane enamel finish designed for exposure to extreme conditions. Other types of paint may be called for as options by owner but are not dealt with in this section.

8.3.1 Safety

Care should be exercised in storing, handling, mixing, and applying paint and chemicals listed in this manual. The topcoat, primer, solvent, catalysts, accelerators, and cleaners are highly volatile and/or toxic if not properly used. Observe all safety instructions marked on the different packagings, as well as the following:

1. Do not smoke in the paint room or in adjacent area exposed to residue fumes.
2. Wear respirators approved by the governing safety and health regulations.
3. Maintain adequate ventilation at all times.
4. Dispose of any leftover paint mix properly.
5. Wear rubber gloves, rubber apron, and face shield during all phases of paint and chemical handling.

8.3.2 Surface Preparation and Paint Application

	Aluminum and / or Stainless Steel	Fiberglass	Comments
Surface Preparation	Sand using P-150 grit sandpaper. It is recommended to sandblast rivets and panel edges with OLIMAG 35-70 blast media.	Sand using P-180 or P-240 sandpaper.	Do not use paint remover over aluminum or fiberglass.
Cleaning	STANDOX silicone remover ST-11654 (68-2989)		
Priming	STANDOX Reactive Etch Primer ST-13908 * Wait 30 minutes then apply STANDOX Non-Stop Füllprimer ST-11000 (68-2973)	STANDOX Non-Stop Füllprimer ST-11000 (68-2973)	Refer to product Technical Data sheet for proper mixing
Basecoat	Refer to paint scheme or coach record for proper color code and paint brand. We recommend using the same paint brand to ease color matching.		Refer to product Technical Data sheet for proper mixing
Clearcoat	STANDOX 2K MS Rapid Clear ST-11760 (68-2979) Allow 16 hours for drying		Refer to product Technical Data sheet for proper mixing

If assistance or technical information on STANDOX products is needed, please dial: 1 (800) 551-9296

8.4 FRONT AND REAR BUMPERS

8.4.1 Paint touchup and surface preparation for vehicles equipped with urethane bumpers

	COMMENTS	VIP	COACHES
Cleaning	Clean using red wool and Standoflex 11100 (ST-11425) thinner	YES	YES
	Clean again twice using Standoflex 11100 (ST-11425) thinner	YES	YES
Priming	Apply Non-Stop primer (ST-13320) with flexible agent dilution 2:1 10% in 2 or 3 coats, 15 min. flash/off between coats	YES	YES
Sanding	Sand Non-Stop primer using P-320 grit sandpaper	YES	YES
	Use a tack cloth	YES	YES
Basecoat	Apply basecoat. Wait 30 minutes.	YES	YES
Varnish dilution	Dilution without flexible agent	YES	YES
Varnishing	Apply varnish	YES	YES

If assistance or technical information on STANDOX products is needed, please dial: 1 (800) 551-9296

9. FRONT AND REAR BUMPERS

9.1 FRONT BUMPER REMOVAL AND INSTALLATION

The front bumper is hinged to give access to the spare wheel compartment. Bumper must first be tilted down before its removal. Two people are required to remove and install the front bumper.

WARNING

Front bumper weighs approximately 180 lbs. (80 kg). Use proper lifting equipment to support the bumper during the removal and installation operations to avoid personal injury.

Pull on the release handle located in the front electrical and service compartment. The bumper assembly will lower gradually.

9.1.1 Front Bumper Removal

Loosen 12 attaching bolts from inside the bumper, 6 over and 6 under the bumper beam (Figure 17). Let the bumper rest face down on the lifting equipment platform.

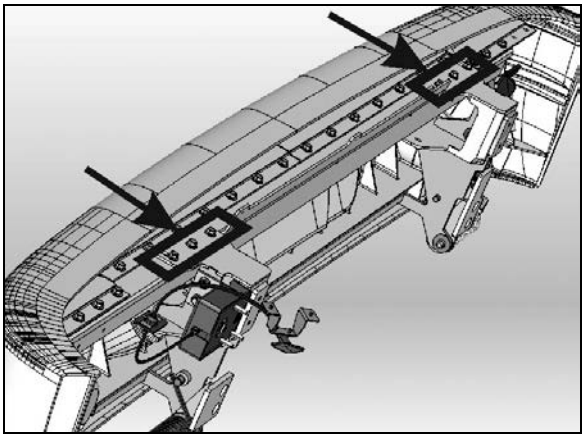

FIGURE 17: BUMPER ATTACHING BOLTS 18498

To reinstall the front bumper, reverse the procedure.

9.1.2 Front Bumper Skin Removal

The bumper skin is pinched to the bumper beam by the use of aluminum extrusions bolted over and under the beam. First, remove the front bumper as per “Front Bumper Removal”. Let the bumper rest face down on the lifting equipment platform. Loosen the aluminum extrusion bolts as required and then detach the skin from the beam (Figure 18).

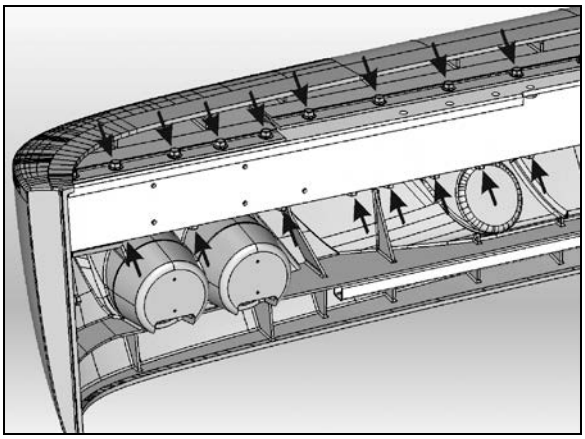

FIGURE 18: ALUMINUM EXTRUSIONS - BUMPER SKIN REMOVAL

9.1.3 Front Bumper Assembly Removal including spare wheel compartment door.

1. Ask assistant to relieve spring tension with assistant proper tool, and relieve spring tension on one locking pin and remove it. Slowly release spring tension and remove the second locking pin. The spring is free. Repeat procedure for the other spring.

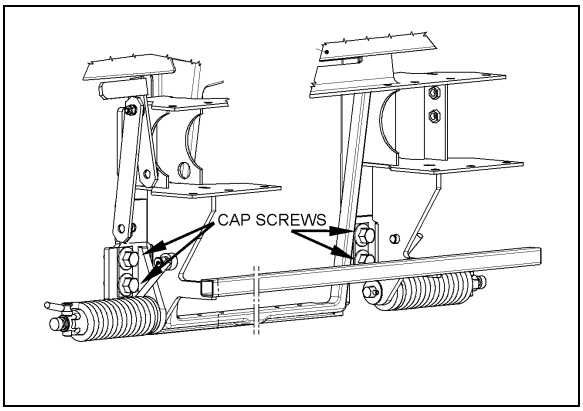

FIGURE 19: FRONT BUMPER ASSEMBLY

NOTE
A special tool kit is available from Prevost: Kit # 410671 including tool #410708.

2. Remove 4 cap screws holding bumper to vehicle and remove bumper (Figure 19).
3. To install bumper, reverse the removal procedure.

9.2 FRONT BUMPER LICENSE PLATE SUPPORT INSTALLATION

License plate supports are stored in the first baggage compartment. Install supports as per figure 12.

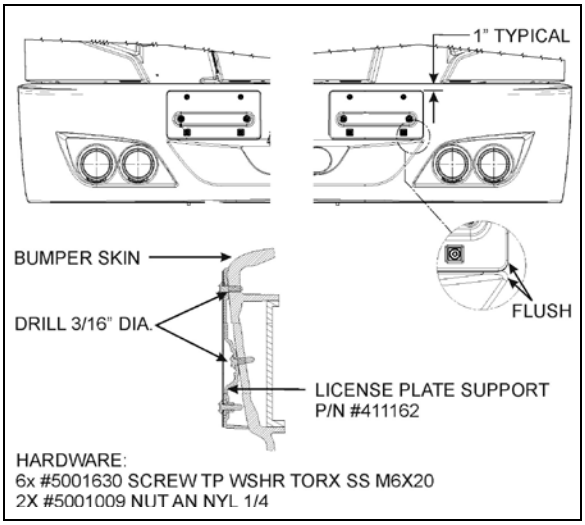

FIGURE 20: LICENSE PLATE SUPPORTS 18500A

9.3 REAR BUMPER REMOVAL AND INSTALLATION

WARNING

Rear bumper weighs approximately 180 lbs. (80 kg). Use proper lifting equipment to support the bumper during the removal and installation operations to avoid personal injury.

1. Remove 6 nuts (3 on each side) holding bumper assembly to vehicle and remove bumper (Figure 21).
2. Let the bumper rest face down on the lifting equipment platform.
3. To install bumper, reverse the procedure.

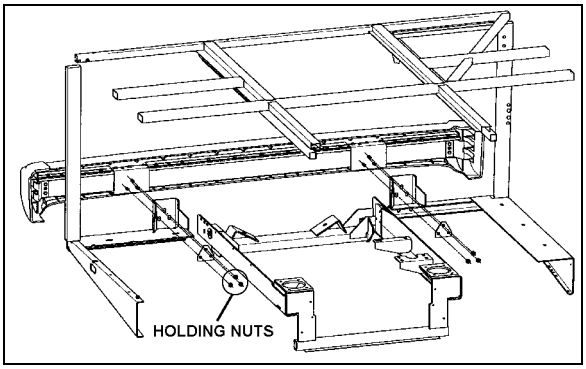

FIGURE 21: REAR BUMPER ASSEMBLY 18501

10. COACH ENTRANCE DOOR

An air operated “sedan type” entrance door, with an air door cylinder and damper assembly are installed under the right hand dash. The opening and closing door speed cycle is adjustable by a damper mounted in parallel with the door cylinder on the door hinge (Figure 24). Door activation is controlled by a relay panel, located near the defroster and wiper motors. The accessory air reservoir supplies air to this system.

The door is held in the closed position during coach operation by two air cylinder locking mechanisms (Figure 25). Air cylinders with return spring in the cylinder body are used. Air cylinders are controlled by an electrically operated solenoid valve energized by a rocker switch located under the right hand dashboard.

To open the door, initial movement of the rocker switch de-energizes the air lock solenoid valve, venting the door locking cylinders. The return locking spring pulls the door lock away from the latch, unlocking the door. Door movement starts only when pressure in the central air door lock is below 10 psi. The “air cylinder open solenoid valve” opens and allows air to flow to the door cylinder, “the air cylinder close solenoid valve” exhausts air from the rod side of the cylinder.

To close the door, initial movement of the switch energizes the “air cylinder close solenoid valve” and air flows to the cylinder by its rod side port. The “air cylinder open solenoid valve” exhausts air from cylinder. When entrance door latch is grounded with the door frame, the air lock solenoid valve is de-energized and loads the door lock cylinders. The cylinder moves the door lock in a position which engages a latch on the entrance door, holding the door positively closed.

Emergency exit valves, which open the air valve circuit, should be used only in emergencies, or when the door control system does not function properly.

Refer to the air system schematic diagram annexed at the end of section 12, “Brakes” and to page 22 of the wiring diagram.

10.1 OPERATION

The air-operated door is controlled from inside the coach by two push-button switches located on the R.H. dashboard.

Opening and closing of the door from outside the coach is accomplished by a momentary toggle switch located behind the coach model nameplate (Figure 22).

To close the door, the switch must be pushed towards the rear of the coach and held in position until the door has completed its movement.

To open the door, the switch must be pushed towards the front of the coach and held in position. When the door reaches the fully opened position, the system will keep pressure in the cylinder locking the door in that position. The door can be stopped in any position by releasing the switch. The door is not locked in position when not fully opened or closed.

If the door has been locked with the key, a lever on the door can be moved to unlock.

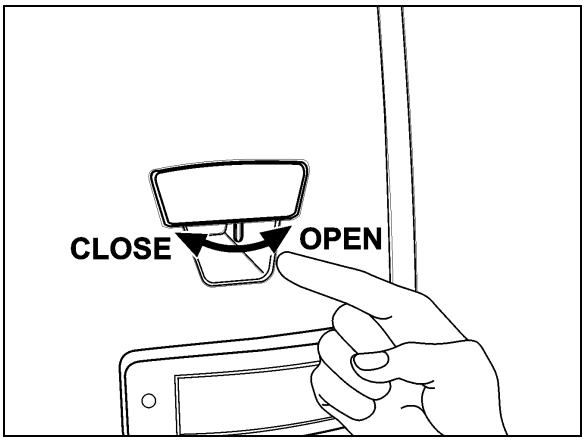

FIGURE 22: DOOR OPERATING SWITCH 18316

10.2 EMERGENCY EXIT VALVES

From inside the vehicle, an emergency exit valve located near the door on the dash panel, releases the pressure from the lock cylinders. From the exterior, an emergency exit valve located in the front service compartment, also releases the air from the lock cylinders.

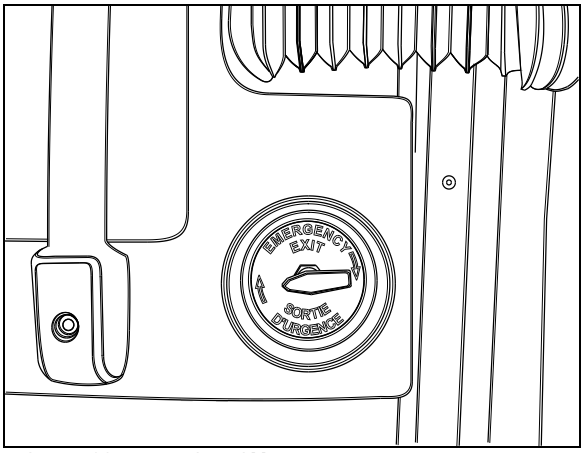

FIGURE 23: EMERGENCY EXIT VALVE 18321

10.2.1 Without Air and/or Without Electricity

If the air pressure drops while coach has or hasn't any electricity, the spring loaded cylinders will unlatch the door. In such a case, unlock the door by moving the lever on the door or by using the key, then open the door manually.

10.2.2 With Air but Without Electricity

From inside the vehicle, turn the emergency exit valve to the "UNLOCK" position. Move the lever. From the exterior, turn the emergency exit valve to the "UNLOCK" position. Open the door. Close it, lock with the key and reset the outside emergency exit valve to the "NORMAL" position.

10.3 DOOR CYCLE SPEED ADJUSTMENT

To do any adjustment, remove the two panels located next to the door hinge, as well as the door's upper hinge control.

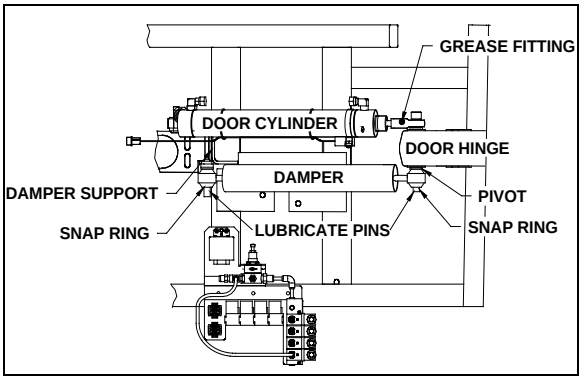

FIGURE 24: DOOR CYLINDER AND DAMPER 18161

CAUTION

It is important to make sure that damper does not reach end of stroke when door is completely closed or opened. The door cylinder must stop the door on opening. Screw or unscrew rod end to adjust if necessary.

To adjust opening and closing cycle speed on damper (Figure 26):

1. Remove the damper from the vehicle and hold it vertically with the lower eye or pin attachment in a vice. Use clamp plates to prevent damage.
2. Fully close the damper while turning the dust cap or piston rod slowly CCW until it is felt that the cams of the adjusting nut engage in the recesses of the foot valve assembly (Figure 26).

NOTE

In figure 18, if there is an indentation (B) in the dust cap (C) and the cover shows two holes (A), the damper is fitted with a bump rubber (D). If so, fully extend the damper and insert a round bar or screwdriver through the holes. Push the bump rubber down and remove. Remove the split plastic collar (E) (if fitted) from the piston rod.

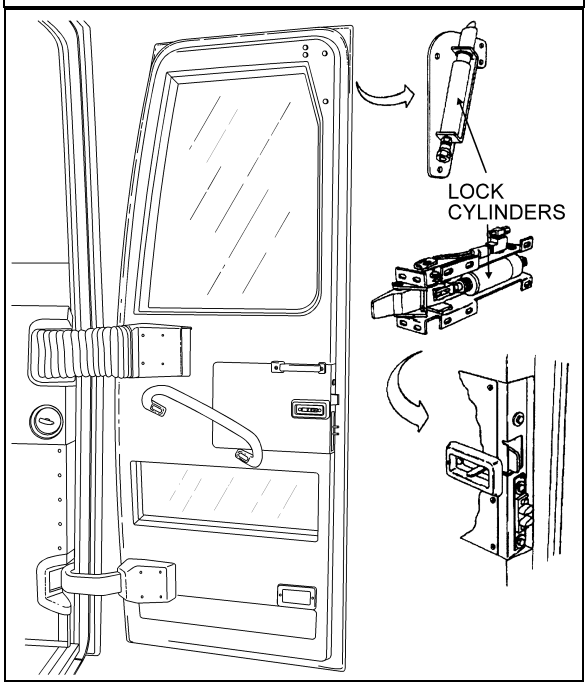

FIGURE 25: COACH ENTRANCE DOOR 18439

3. The damper may have already been adjusted. Therefore check whether the

damper is adjusted or not by keeping it closed and gently turning further CCW, counting at the same time the half-turns until a stop is felt. Stop turning and do not force.

4. While keeping the damper closed, make two CW half-turns. In case of prior adjustment, add the number of half-turns previously counted. The total range is about five half-turns.
5. Pull the damper out vertically without turning for at least 3/8" (1cm) to disengage the adjusting mechanism. The dust cap or piston rod may now be turned freely.

NOTE
*Where a bump rubber was installed, refit same inside the dust cap and by fully closing the damper, the rubber will seat again at top of the dust cap. Refit the split plastic collar E (*Figure 26*)*

6. The damper can now be refitted in the vehicle.
7. Reinstall panels and entrance door hinge cover.

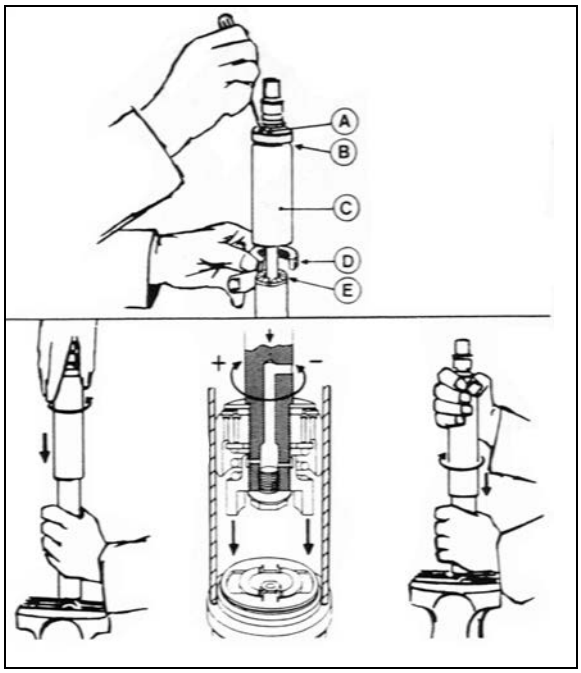

FIGURE 26: DAMPER

10.4 HORIZONTAL AND VERTICAL ADJUSTMENT

Before attempting to correct any door operating problem by adjusting any part of the air cylinder assembly, first perform the following mechanical checks and procedure.

Check around the perimeter of the door for binding. If any binding is found, adjust as follows:

1. Remove the screws and the plastic molding covering each of the hinges.

NOTE
Ask an assistant to help you to perform the following adjustments.

2. Remove the Allen button head screw and the washer retaining the rod end with bearing to the upper hinge. See figure 19.
3. Support the door with a wooden block and a hydraulic jack.
4. Loosen the horizontal bolts retaining the door to the hinges. Adjust the door horizontally and vertically with the jack. Tighten the bolts.

TORQUE: 55-65 lb-ft (75-88 Nm)

5. Remove the jack and the wooden block.

⚠ **CAUTION**
Make sure the entrance door does not interfere with the exterior panel.

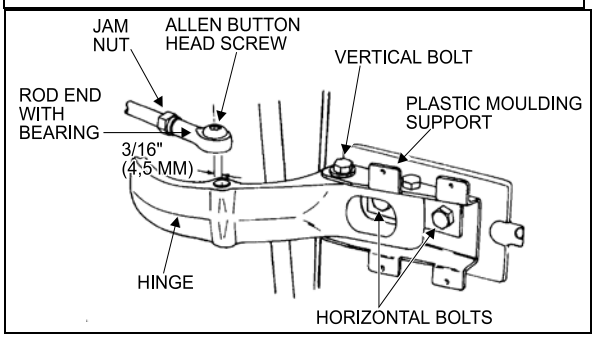

FIGURE 27: UPPER DOOR HINGE (COACH) 18058

6. Pull and fasten the rod end to the hinge with the washer and the button screw.
7. Screw the plastic moldings covering the hinges.

10.5 DEPTH ADJUSTMENT

1. Turn the emergency exit valve to the “UNLOCK” position.
2. Remove the screws and the plastic molding covering each of the hinges.

NOTE
Ask an assistant to help you to perform the following adjustments.

3. Remove the Allen button head screw and the washer retaining the ball and socket rod to the upper hinge. See figure 19.
4. Loosen the vertical bolts on the hinges for the front section, and for the rear section, move the central door catch on the door frame.
5. To adjust the male dovetail on L.H. side of the door, remove the two screws and loosen the two bolts. Slide the male dovetail toward the interior and loosely tighten the two bolts. Close the door slowly but firmly, then slowly open it and tighten the two bolts. Attach dovetail to the door with screws. See figure 20.

NOTE
The frame dovetail is not adjustable.

6. Pull and fasten the rod end to the hinge with the washer and the button screw.
7. Using the screws, attach the plastic moldings covering the hinges.
8. Reset the emergency exit valve to the normal position.

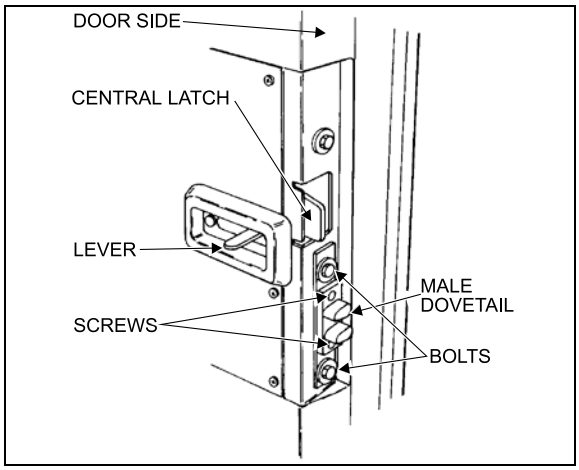

FIGURE 28: DOOR LATCH (COACH) 18059

10.6 ROD END ADJUSTMENT

1. Turn the emergency exit valve to the “UNLOCK” position.
2. Remove the screws and the plastic moldings covering the upper and lower hinges.
3. Remove the Allen button head screw and the washer retaining the rod end with bearing to upper hinge. See figure 19.
4. Loosen the jam nut locking the door cylinder rod end. Close the door firmly, adjust the rod end center hole in order to be 3/16” (4,5 mm) eccentric toward the left with the hinge hole center. Tighten the jam nut.
5. Pull and fasten the rod end to the hinge with the washer and the button screw.
6. Using the screws, attach the plastic moldings covering the hinges.
7. Reset the emergency exit valve to the normal position.

10.7 LUBRICATION

Part	Lubricant	Frequency
Latches Upper door catch Door cylinder rod end with bearing grease fitting (Figure 28)	Low temperature grease	Every six months
Door locking mechanism	White grease	Every six months
Key hole Damper pins (Figure 24) Hinges	Low viscosity oil	Every six months

10.8 TROUBLESHOOTING

SYMPTOM	PROBABLE CAUSE	REMEDY
DOOR WILL NOT OPEN FROM EXTERIOR SWITCH.	Manual door locks engaged.	Release manual door locks.
	Upper and lower solenoid locks do not disengage.	Check voltage at solenoid locks when door is open. If the voltage is 24 volts then replace solenoid #641217. Else, check circuit power.
	Relay module do not receive current.	Reset breaker "ON" or check batteries power supply.
	Opening solenoid door does not receive current.	Check voltage at opening solenoid door. If the voltage is 24 volts then replace it. Else replace control relay.
	Switch malfunction.	Replace switch.
DOOR WILL NOT CLOSE FROM EXTERIOR SWITCH.	Switch malfunction.	Replace switch.
	Solenoid failure.	Check voltage at solenoid. If the voltage is 24 volts then replace solenoid. Else replace control relay.
DOOR WILL NOT OPEN FROM INTERIOR SWITCH.	Manual door locks engaged.	Release manual door locks (open position) from vehicle exterior.
	Upper and lower solenoid locks do not disengage.	Check voltage at solenoid locks when door is open. If the voltage is 24 volts then replace solenoid #641217. Else, check circuit power and replace control relay.
	Module relay does not receive electric current.	Reset breaker "ON" or check batteries power supply.
	Door opening solenoid does not receive current.	Check voltage at door opening solenoid. If the voltage is 24 volts then replace it. Else replace control relay.
	Switch malfunction.	Replace switch.
	Upper lock stays engaged.	Lubricate upper lock assembly. Check wear and replace parts if necessary.
DOOR WILL NOT CLOSE FROM INTERIOR SWITCH.	Switch malfunction.	Replace switch.
	Door closing solenoid does not receive electric current.	Check voltage at door closing solenoid. If the voltage is 24 volts then replace it. Else replace control relay.
DOOR WILL NOT OPEN AFTER DRAINING AIR FROM SYSTEM BY EMERGENCY VALVE(S).	Manual door locks engaged.	Release manual door locks (open position) from vehicle exterior.
	Damper cylinder blocks the door.	Adjust or replace damper cylinder.
	The upper lock blocks the door	Adjust lower lock. Lubricate upper latch bolt. Adjust upper latch height.
DOOR LOCKS STAY ENGAGED WHEN DOOR IS OPEN.	Power supply is cut at solenoid.	Place switch in open position.
	Solenoid lock does not disengage.	Check voltage at solenoid locks when door is OPEN. If the voltage is 24 volts then replace solenoid #641217. Else, check circuit power and replace control relay.
DOOR DO NOT LOCK WHEN DOOR IS CLOSED.	Emergency valve is open.	Close emergency valve.
	Lock solenoid stays electrified.	Check latch bolt ground on door frame. If needed clean locks for better contact. Check ground circuit.
	Lock solenoid works in reverse.	Reverse air hoses at solenoid locks.
	Relay does not function.	Replace relay.

11. ENTRANCE DOOR (V.I.P)

There are three ways of unlocking the entrance door from the inside of vehicle. The two first consist in actuating the rocker switch on the dashboard, but this last operation will also unlock the baggage compartments. Finally, you can unlock the door by sliding its lock lever to the left. If the orange tab on the door lock lever is visible, the door is unlocked.

You may lock/unlock the entrance door from the outside with the lock key provided with the vehicle. Turn key CCW to lock and CW to unlock the entrance door.

11.1 KEYLESS ENTRY SYSTEM

With this system, you can lock or unlock the entrance door as well as the baggage and service compartment doors. The keyboard is located below the entrance door handle. The module is pre-programmed by the manufacturer and this code can not be deleted. Moreover, you can program your own entry code. Refer to the "VIP Owner's Manual" for instructions on how to program your own entry code.

When you use the keyless entry system, the keyboard and stepwell lights illuminate. Do not push the buttons with a key, pencil or any other hard object as it could damage the buttons.

Although each button is provided with two digits separated by a vertical line, there is only one contact per button. Always press the center of the button (between the two digits, on the vertical line).

If you let more than five seconds pass between each button press, the system shuts down, and you have to enter your code again. If the keyless entry system does not work properly, use the key to lock or unlock entrance or compartment doors. To know more about the keyless system, refer to the "VIP Owner's Manual".

NOTE
You must unlock the entrance door before you unlock with the appropriate key any baggage or service compartment doors.

11.2 DOOR ADJUSTMENT

Check around the perimeter of the door for binding. If any binding is found, adjust as follows:

11.2.1 Horizontal and Vertical Adjustments

1. Remove the screws and the plastic molding covering each of the hinges.

NOTE
Ask an assistant to help you to perform the following adjustments.

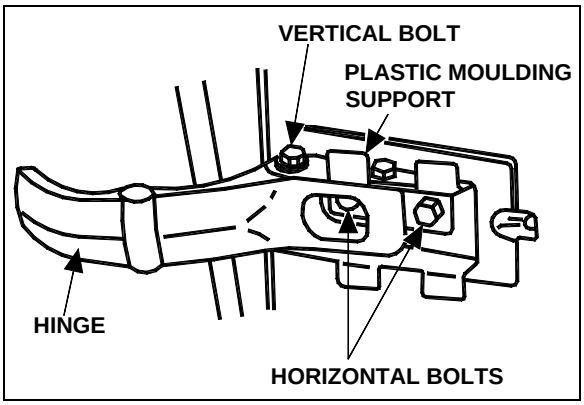

FIGURE 29: ENTRANCE DOOR (VIP) 18058VIP

2. Support the door with a wooden block and a hydraulic jack.
3. Loosen the horizontal bolts retaining the door to the hinges. Adjust the door horizontally and vertically with the jack. Tighten the bolts to

   TORQUE: 55-65 lb-ft (75-88 Nm)

   Remove the jack and the wooden block.
4. Check door fit.
5. Using the screws, fasten the plastic trim to cover the hinges.

11.3 DEPTH ADJUSTMENT

To adjust door depth on the hinged side:

1. Remove the screws and the trim covering each of the hinges.

NOTE
Ask an assistant to help you to perform the following adjustments.

2. Slightly loosen, but not completely the vertical bolts on both door hinges.
3. Ask your assistant to press the door from the exterior, until it will adjust with the vehicle structure. Then, tighten the vertical bolts.
4. Repeat step 3 until depth is corrected to satisfaction.

5. Using the screws, install the trim hiding the hinges.

To adjust door depth on lock side:

Depth adjustment is done by moving the two door striker pins.

1. Slightly loosen the door striker pins.
2. Ask your assistant to press the door from the exterior, until it will adjust with the vehicle structure. Then tighten the striker pin.
3. Repeat until the door depth is corrected to satisfaction.

11.4 DOOR LOWER SECTION

When a plastic door lower section replacement is needed, proceed the following way:

1. Remove the reflective stripe at the top edge of the door's lower section. Unscrew the retaining screws located under the reflective stripe.
2. Remove the lower section.
3. With a sharp edge knife, scrape as much tape as possible and compound left on the fiberglass door surface. Note where adhesive tape and sealing compound was applied.
4. Sand the surface or the door where new adhesive tape will be applied with 240 grit sandpaper.

NOTE
Tape adheres best to smooth surfaces such as glass or gelcoat finishes. Be careful surface is as smooth as possible before applying tape.

5. Clean contact surfaces with alcohol.
6. Clean the fiberglass door and the new plastic lower section with a "tack cloth". Make only one pass on the surface and never come back on a previously cleaned surface.

WARNING
Wear rubber gloves and do not smoke when cleaning.

7. Prepare the door lower section with Sika #205 and a clean rag. Make only one pass on the surface and never come back on a previously cleaned surface.

NOTE
Never use Sika #205 directly from the container to avoid contamination of the product.

8. Wait at least 5 minutes before preceding the next step to allow complete evaporation of the product.
9. Put new adhesive tape where it was previously applied. Pass a 1" (25mm) roller on it to get a good adhesion on the fiberglass.
10. Apply Sika #252 (Prevost #682462) compound where it was previously applied.
11. Remove protective paper from the adhesive tape and install the door lower section. Apply pressure with a roller where the lower door section touches the fiberglass door.
12. Replace the retaining screws.

11.5 REFLECTOR STRIPE INSTALLATION

1. Clean contact surfaces with alcohol.
2. Prepare surface of reflector stripe and door lower section with Sika #205.
3. Put two rows of adhesive tape on the lower door section.
4. Apply Sika #252 (Prevost #682462) compound between parallel tape stripes.
5. Remove protective paper from the adhesive tape and press the reflective stripe in place.

11.6 DOOR SEAL REPLACEMENT

1. Inspect the seal; if cracked or torn, it must be replaced:
2. Remove the old seal and with a sharp edge knife, scrape tape left on the fiberglass door surface.
3. Sand the surface of the door where a new seal will be applied with 240 grit sandpaper.
4. Clean the surface with alcohol.

WARNING

Wear rubber gloves and do not smoke when cleaning.

5. Peel of protective paper from the seal. Position the seal in order to leave ¼" (6 mm) from the upper molded edge of the door and 3/16" (4,5 mm) from the sides and lower molded edges of the door.
6. Progress slowly all around the door.
7. Cut the seal and glue both ends with LOCTITE 414 glue.
8. To assure bonding, press a small roller on top of the new seal.

11.7 DOOR LUBRICATION

Part	Lubricant	Frequency
Latches Upper door catch	Low temperature grease	Every six months
Door locking mechanism	White grease	Every six months
Key hole Hinges	Low viscosity oil	Every six months

11.8 DOOR LATCH MECHANISM

Generally, when the latch mechanism malfunctions, a number of causes may be responsible for this situation. No single procedure will correct this situation. It is best to remove the protective cover and to look for binding, used or bent parts. Operate the latch mechanism and try to find where any binding occurs. Replacing a part or slightly bending a rod should be enough. Remember, having a global understanding of the mechanical activity will generally lead you to the cause of the problem, and ultimately to an easy repair.

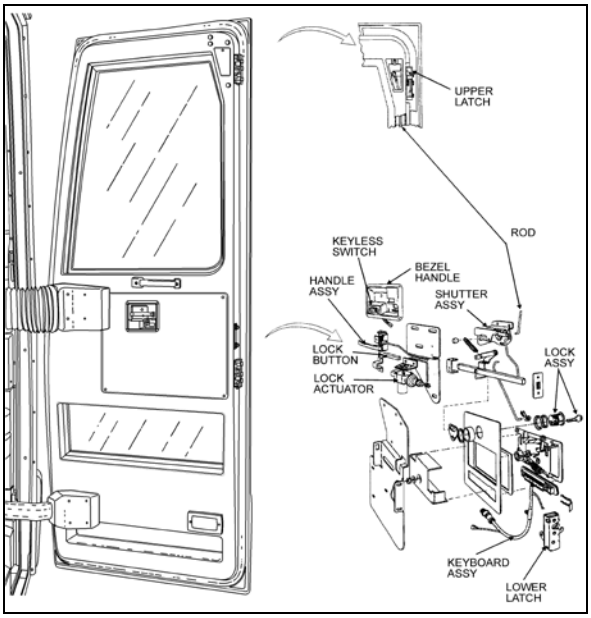

FIGURE 30: ENTRANCE DOOR (VIP, TYPICAL) 18440

12. DRIVER'S POWER WINDOW

To replace window or motor, the whole assembly must be removed. The following instructions refer to figure 23.

12.1 POWER WINDOW REMOVAL

1. Raise the driver's power window.
2. Set the battery master switch to the OFF position.
3. The window must be held in upper position. To do so, use duct tape to hold it in place.
4. Gain access to the power window mechanism. Dismount the driver's area lateral control panel and left interior trim. It may be required to remove the driver's seat and dashboard panel.
5. Unfasten bolts (item 1) fixing the window to the lifting mechanism (actuator).
6. Remove the three bolts (item 2) holding the motor support and actuator assembly in place.
7. Detach the plastic water protection shield and remove the assembly by slipping it under the vehicle structural members.
8. Dismount the window support and lower the window completely to release it from its guides.

9. Detach the motor and actuator guide from the support and plastic shield. Replace parts as required.

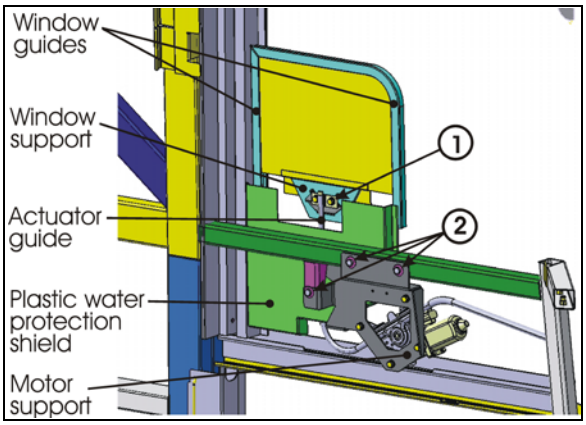

FIGURE 31: DRIVER'S WINDOW 23358

12.2 POWER WINDOW INSTALLATION

1. Energize the motor and position the actuator to its full extended position.
2. Using alcohol, a sharp knife or 240-grit sandpaper, clean off the butyl strip from the shield and frame. Install new butyl strip on plastic shield.
3. Install new window in opening. Use duct tape to hold it in upper position. Fix the window support using bolts recovered from disassembly. Use Loctite on threads.
4. Fasten window support to actuator using the recovered bolts (item 1). Use Loctite on threads.
5. Expose the other sticky side of the butyl strip. Install motor support and actuator assembly using recovered bolts (item 2). Stick plastic shield in place.

13. ROOF ESCAPE HATCH

The vehicle can be equipped with one or two escape hatches. The escape hatch is designed to provide years of reliable service with a minimum of maintenance. All components are rust proof, and moving parts are Teflon coated to eliminate need for lubrication. Should water infiltrate the vehicle from the escape hatch, refer to the heading "Sealing" in this section for procedures on how to seal this area.

CAUTION

Use of lubricants, paints, or other coatings such as graffiti deterring sprays is not recommended.

Suggested maintenance includes periodic inspection of fasteners for evidence of loosening due to tampering, and regular cleaning with mild soap and water.

Although there are other cleaning solutions available, some contain solvents and other chemicals that can attack the high strength materials used in the production of the escape hatch.

CAUTION

Ensure that cleaning solutions are compatible with the materials used on the escape hatch.

Graffiti removing cleaners often contain acetone, ether, lacquer thinner or other solvents known to destroy the high strength properties of many plastics. Use of these cleaners must be avoided.

Graffiti-resisting coatings often leave a sticky residue that interferes with smooth up/down movement of the hatch mechanism. Some of these coatings also contain solvents that will reduce the strength of certain components.

CAUTION

Use of these coatings is at considerable risk and should be avoided.

13.1 REPAIR

All components used in the production of the escape hatch are available as service parts, except for one hinge that represents a possible hazard when improperly reattached to a hidden tapping plate, itself often damaged whenever the hinge is damaged. The tapping plate is permanently laminated between the inner and outer cover assemblies, and it cannot be inspected or replaced. It is therefore necessary to replace the entire assembly following damage to the hinge. See figures 24 and 25.

CAUTION

Hinge assembly is critical and hinge should never be removed from cover assembly. Fasteners used in this assembly are special and have critical torque requirements and tamper-resistant heads to discourage tampering.

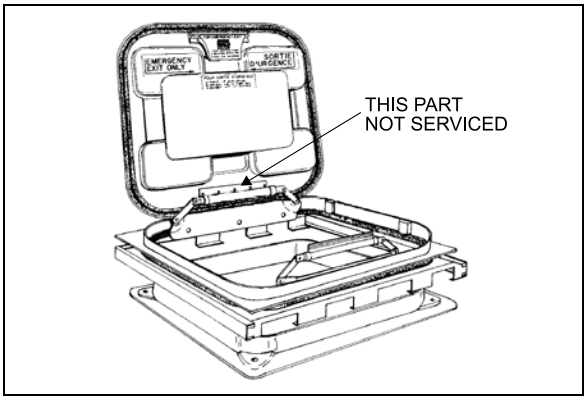

FIGURE 32: ESCAPE HATCH 18104

13.2 SEALING

1. Open and tilt up the escape hatch cover.
2. Join the 2 ends of the rubber seal.

CAUTION

Seal joint should be toward rear of vehicle.

3. Apply rubber adhesive CA-40 (Prevost # 681285) in the gap between the seal ends.
4. Apply Sikaflex 221 sealant (Prevost # 680532) along the outline of the escape hatch on the roof of vehicle.

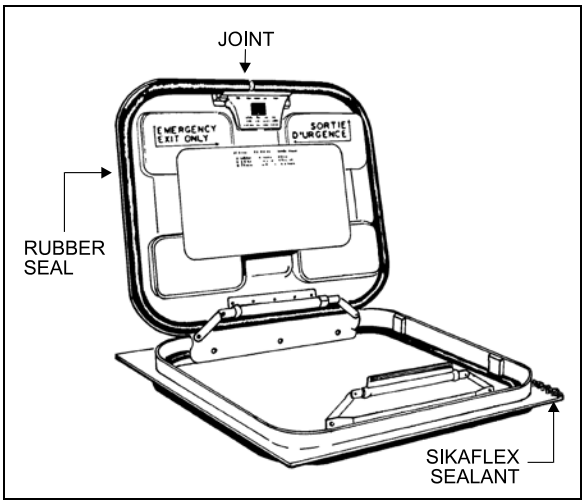

FIGURE 33: ESCAPE HATCH 18105

13.3 ESCAPE HATCH PANEL ASSEMBLY

The frame of the escape hatch is riveted to the roof of the vehicle. The escape hatch panel assembly can be replaced as a unit and a new panel assembly installed in the existing frame. To remove the panel assembly, remove the 4 bolts fastening the 2 hinges to the escape hatch frame and retain the 4 flat washers. Reinstall the panel assembly by fastening the 2 hinges with the 4 bolts and flat washers removed earlier.

CAUTION

When installing, roof escape hatch's hinge must be toward the front of vehicle, to prevent the hatch from being ripped out if accidentally opened while vehicle is running.

13.4 ESCAPE HATCH FRAME

When necessary, the escape hatch frame can be removed and replaced in the following way:

1. Support the frame from inside the vehicle.
2. Remove rivets.
3. Cut the rubber seal with a sharp edge knife and remove the hatch frame.
4. On vehicle top, using the knife, remove as much as possible the remaining rubber seal.
5. Drill holes (if needed) in the new metal frame.
6. Clean both vehicle top and new hatch frame with SIKA 205.
7. Apply rubber adhesive SIKA 221 under the hatch frame surface.
8. Install the frame in place and fix it with rivets.
9. Remove excess adhesive and clean all around.

14. REPAIR OR REPLACEMENT OF "TARABUS" FLOOR COVERING

"Tarabus" covering installed in H3 coaches may be replaced or repaired. The purpose of this paragraph is to explain the steps to be followed to ensure the best results and adherence.

MATERIAL

Part No	Description	Qty
680028	Adhesive, Tarabus Floor Covering (White)	A/R
684655	Adhesive, Contact (3M)	3.8L
684654	Adhesive, Contact (3M)	18.9L
680532	Sikaflex 221 Gray	A/R

1. Remove number of passenger seats required to perform repair.
2. Cut and remove damaged section of floor covering.

NOTE
It would be preferable to cut under two rows of seats so that repair is not as noticeable.

3. Clean plywood using a scraper.

NOTE
Make sure that no staples are sticking out beyond surface. Adjacent plywood sheets must be leveled.

4. Fill up holes and imperfections using MAPI PRP 110 then sand.
5. Remove dirt and adhesive residue.

CAUTION
Do not leave floor covering folded down except temporarily during installation.

6. Apply floor covering adhesive (680028) onto plywood using a serrated spreader with 1/8-inch serration. If required, apply contact adhesive (3M) (684655 or 684654) onto aluminum molding and also onto section of floor covering, which will be in contact with molding (refer to figure 45).

NOTE
Allow adhesive to dry (3 to 5 minutes).

7. Compress floor covering using a roller so as to remove any trapped air bubble.
8. Apply Sikaflex 221 gray sealant (680532) alongside passenger seat fixing tracks (refer to figure 27).

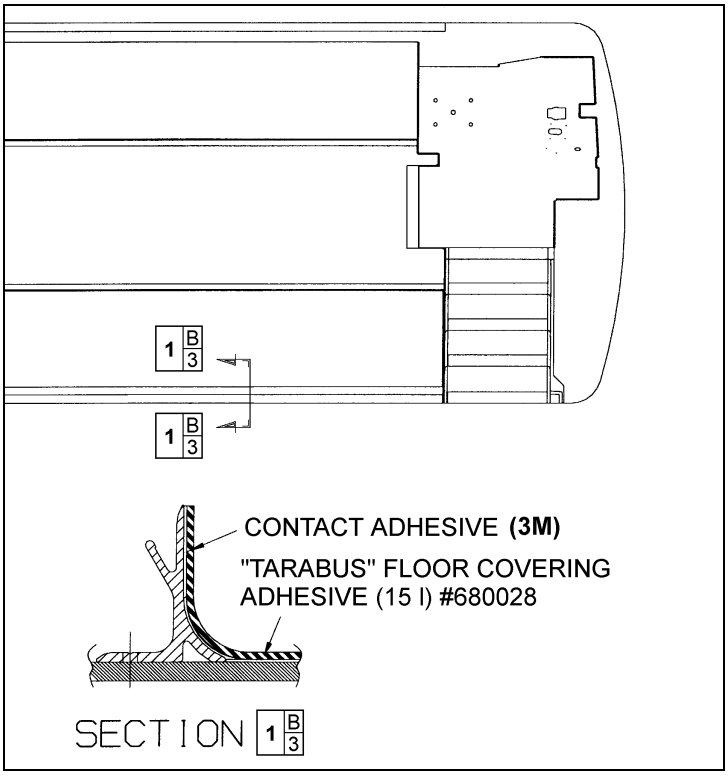

FIGURE 34: TARABUS FLOOR COVERING ADHESIVE APPLICATION

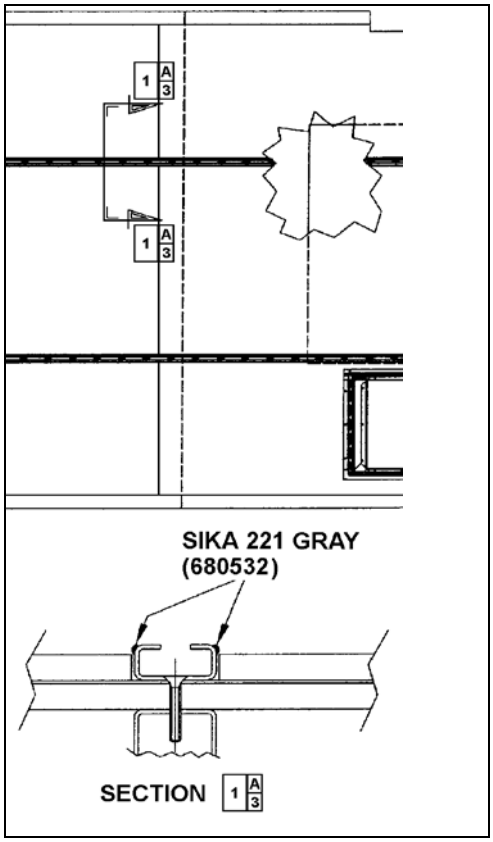

FIGURE 35: APPLICATION OF SIKA 221 GRAY

14.1 FRONT STEPS REPLACEMENT PROCEDURE

MATERIAL

Part No	Description	Qty
682989	Anti-silicone	A/R
683097	Sika 205 (1 liter)	A/R
685101	Sika Remover 208	A/R
683916	Sika 215 (1 liter)	A/R
684654	Adhesive, Contact (3M)	3.8L
684655	Adhesive, Contact (3M)	18.9L
684517	Sealant, gray	A/R

1. Cut and remove damaged step(s).
2. Remove dirt and adhesive residue.

NOTE
In wintertime, condensation and cold temperature may greatly influence bonding parameters. Working area must be at a temperature sufficient to prevent reaching condensation point. Mechanically preheat working area (heat lamp or heat gun) or wait until vehicle reaches room temperature.

PREPARATION OF "TARABUS" FLOOR COVERING

1. Sand under step using "Scotchbrite".
2. Clean using anti-silicone (refer to Section A).

Section A Alcohol or Anti-silicone

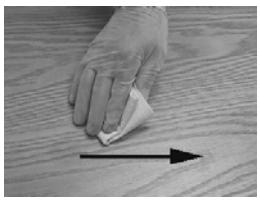

1. **Apply**

CHIX cloth

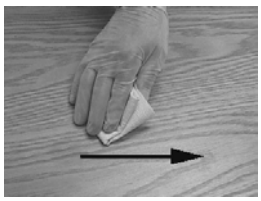

2. **Dry immediately**

Blue cloth

3. **Allow drying**

Mandatory	**Minimum time : Wait for product to evaporate**
	After 2 hours: Start cleaning operation again
Before applying any other product	If surface seems dusty, greasy or with finger marks, start cleaning operation again.

3. Apply Sika Primer 215 (refer to Section D).

Section D Sika Primer 215

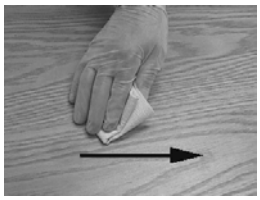

1. **Shake bottle to mix product**

2. **Apply a thin layer**

CHIX cloth

3. **Allow drying**

Mandatory	**215**	**Minimum time : 20 minutes**
		After 2 hours : Remove dust using damp cloth (pure water)
Before applying any other product		If surface seems dusty, dust using damp cloth.
		If surface seems greasy or with finger marks, reactivate with Aktivator.

PREPARATION OF FIBERGLASS

1. Clean using anti-silicone (refer to Section A).
2. Apply Sika 205 (refer to Section B).

Section B Sika 205

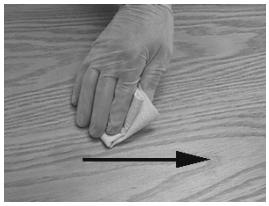

1. **Apply**

CHIX cloth

2. **Allow drying**

Mandatory	***Minimum time***	**- For a smooth surface (aluminum, stainless, steel, fiberglass (gelcoat side), etc.):**	**2 minutes**
		- For a porous surface (fiberglass (non gelcoat side), etc.)	**10 minutes**
	After 2 hours : Reactivate surface with Sika 205		
Before applying any other product		If surface seems dusty, greasy or with finger marks, start operation again.	

H3 VEHICLE FRONT STEPS GLUING

1. Remove adhesive tape from underneath step.
2. Apply a thin and even layer of contact adhesive (3M) (684655 or 684654) onto fiberglass and step surfaces. Allow drying for 3 to 5 minutes.
3. Install step beginning with the back and finishing with step nosing. Compress step covering using a roller paying particular attention to corners, edges and front of step.
4. Apply a bead of sealant (684517) around the perimeter of steps. Smooth out the joints.

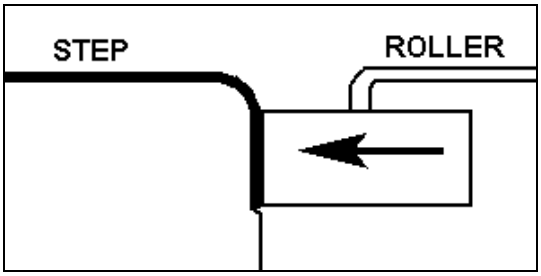

GLUING OF WHITE SAFETY STRIP BETWEEN STEP AND "TARABUS" FLOOR COVERING

1. Sand fiberglass using "Scotchbrite".
2. Clean using tack cloth.
3. Clean twice using anti-silicone (refer to Section A).
4. Protect surfaces around the step with masking tape.

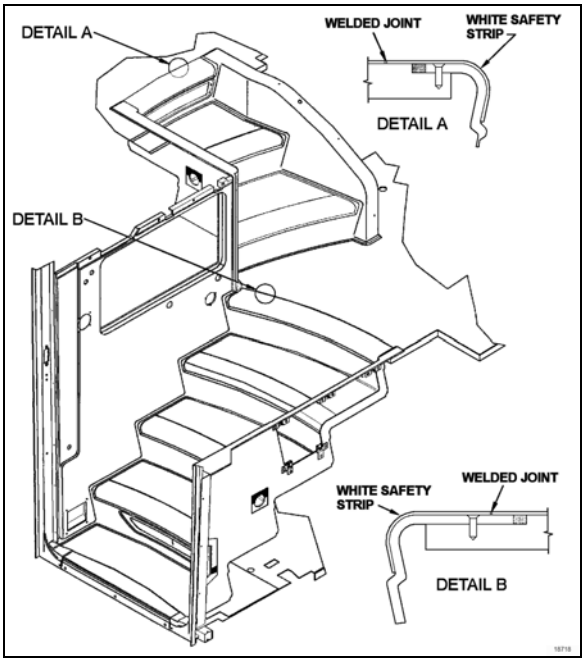

5. Apply contact adhesive (3M) (684655 or 684654) onto both surfaces to glue (fiberglass and back of white safety strip). Drying time: 4 to 5 minutes.

NOTE
There should be no floor covering adhesive (680028) onto plywood before applying contact adhesive, otherwise the two surfaces won't stick.

6. Position white safety strip with reference to "Tarabus" step covering finishing with step nosing. Compress step covering using a roller paying particular attention to corners, edges and front of step.

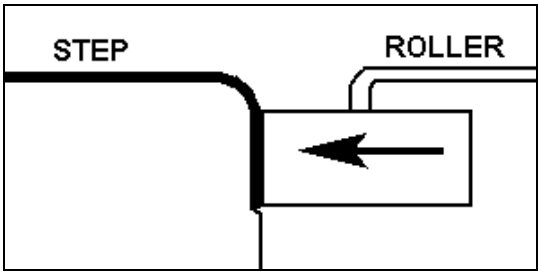

NOTE
Keep a gap of 1 to 1.5 mm between "Tarabus" covering and white safety strip.

7. Remove masking tape.

14.2 WELDING OF JOINT BETWEEN WHITE SAFETY STRIP AND "TARABUS" FLOOR COVERING

1. Pre-heat welding torch;

   Set welding torch to position #4.5 (temperature of 500 °C),

   Heating time: 5 minutes.

2. Before welding, visually ensure that a 1 to 1.5 mm gap exists between white safety strip and "Tarabus" floor covering. Use a knife if this is not the case.

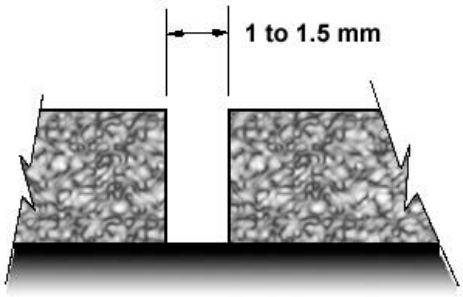

NOTE
There should be no excess of adhesive on top of surfaces, clean if required using "All-Sol".

3. Chamfer the joint.

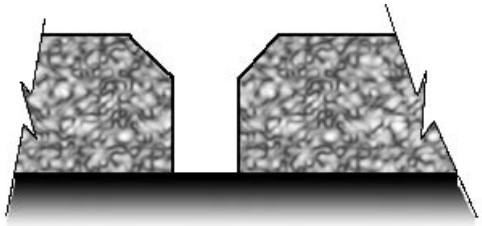

NOTE
The chamfer width must always be less than the filler bead diameter (between 2.5 and 3 mm).

4. Use chamfer knife. **Be careful not to overcut or to cut to the side to prevent damaging "Tarabus" covering.**

5. Add (about 6 inches) some length to the required length of filler bead to make the joint then cut.

6. Take position with welding torch. The proper position is with a slight slope to the rear.

7. Once the welding torch is ready, insert the filler bead into the nozzle and immediately start welding. Move in a regular manner while pressing slightly with torch.

8. The heel of the fast nozzle must not lean against "Tarabus" covering (always parallel to the surface).

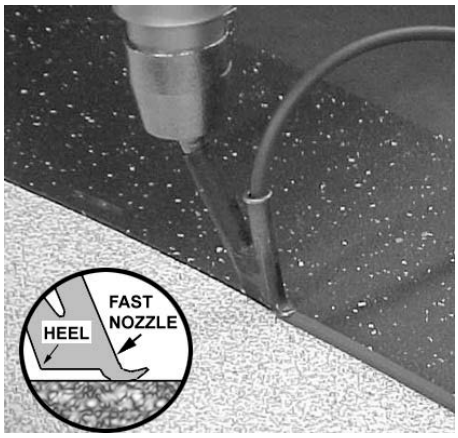

9. Allow cooling down of filler bead (about 5 minutes).

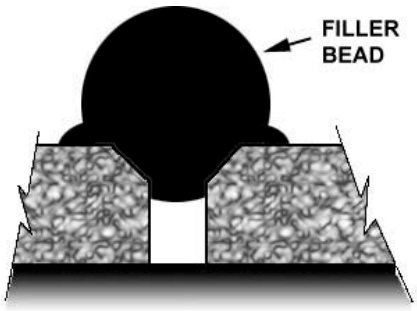

10. Shave filler bead to make it level to the floor. Use supplied knife designed for that purpose.

NOTE
To facilitate the cut, you can spray some soapy water onto the joint.

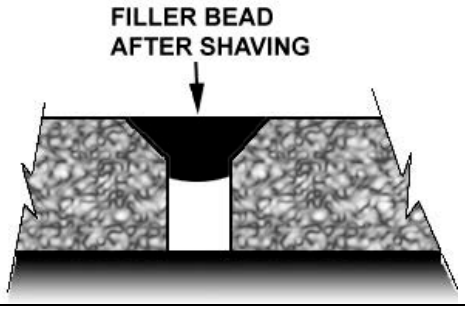

⚠ **CAUTION**
The procedure for turning the torch off must absolutely be followed. If this step is not taken, the element may burn.

11. Set temperature potentiometer to “0” position. Fan will evacuate residual heat. Leave the torch in operation as it is for 3 minutes.

12. Perform adhesion test using the tip of a flat screwdriver; apply a slight pressure on the joint.

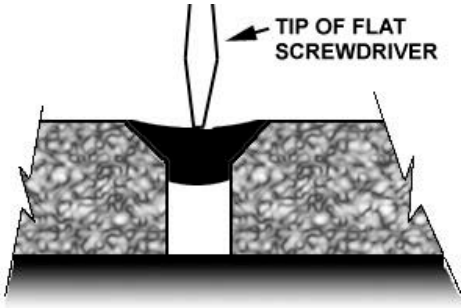

13. If welding was not performed properly, there will be a loss of adhesion on one side. If this is the case, repair the joint.

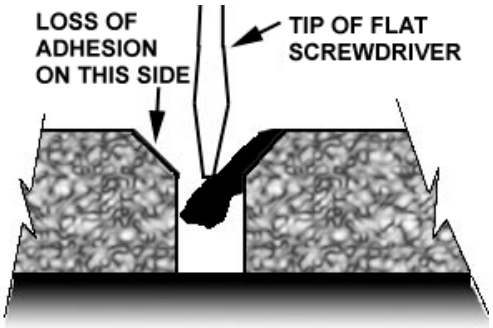

14.3 REPAIR OF A WELDED JOINT

NOTE
In wintertime, condensation and cold temperature may greatly influenced bonding parameters. Working area must be at a temperature sufficient to prevent reaching condensation point. Mechanically preheat working area (heat lamp or heat gun) or wait until vehicle reaches room temperature.

1. Using a knife, remove portion of joint to be repaired.

NOTE
Loss of adhesion may be local. If this is the case, repair may also be local.

2. Chamfer the joint again as indicated in paragraph 3, Section: WELDING OF JOINT BETWEEN WHITE SAFETY STRIP AND “TARABUS” FLOOR COVERING.

3. Re-weld the joint as indicated in paragraphs 6, 7 and 8. Use your thumb to hold the filler bead end.

WARNING

Nozzle is hot.

4. Always add an extra inch of filler bead at the beginning and at the end of repair.
5. Perform steps indicated in paragraphs 9, 10 and 11.

15. PASSENGER SEATS

H3-41 and H3-45 coaches can be equipped with any of 2 basic seat models and installed in a variety of seating arrangements:

1. The *"Tourismo 2"* seat is the base model and is available in heights of 40" (102 cm) and 42" (107 cm). Seating arrangement includes 2 card tables which can be folded and removed, and pivoting seats ahead of each card table. Each pair of seats is built on a welded steel frame fastened to the side wall and on a track-mounted pedestal. Standard seating capacity is 48 in H3-41 and 56 in H3-45.
2. The *"V.I.P."* seat model is an optional seat. *"V.I.P."* seats are mounted on one row of paired seats built on a common frame on one side of the vehicle, and a row of single seats on the other side of the vehicle with an off-center aisle. Each *"V.I.P."* seat has its own set of armrests.

Each seat has a easily removable bottom cushion. Upholstery is clipped on the cusion frame for cleaning or replacement. To remove the fabric, simply unclip from the frame. The *"Tourismo 2"* seats have 3 armrests. The aisle and center armrests can be folded up and down manually, while the window armrest is fixed.

15.1 ROTATING SEATS

1. Remove 1 wing nut holding each seat bottom cushion from under the seat frame.
2. Lift front part of cushions and remove cushions.
3. Remove 4 wing screws fastening seat assembly to seat frame.
4. Pull seat toward aisle and rotate.
5. Align mounting holes and reinstall 4 wing screws.
6. Reinstall seat bottom cushions with wing nuts.

15.2 REMOVING FIXED SEATS

NOTE

Seats on one row are not interchangeable with seats of the other row.

To remove fixed seats, proceed as follows:

1. Remove 1 nut holding each seat bottom cushion from under the front part of the seat frame.
2. Lift front part of cushions and remove cushions.
3. Remove 4 finishing screws holding plastic cover between side wall and seat frame.
4. Remove 2 cap screws, nuts, and washers holding seat frame to side wall and retain the 2 holding brackets. See figures 28 and 29.

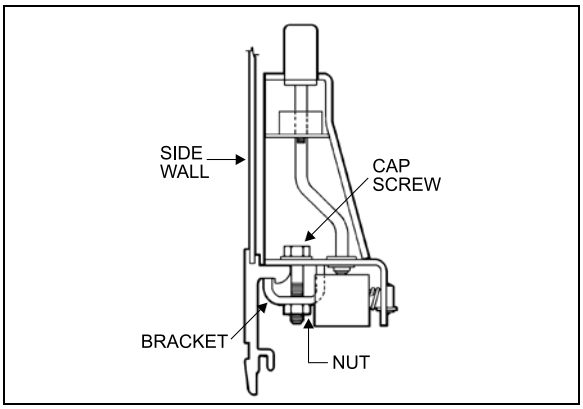

FIGURE 36: ARMREST 18106

5. Remove 2 nuts and washers holding seat frame to pedestal rods.

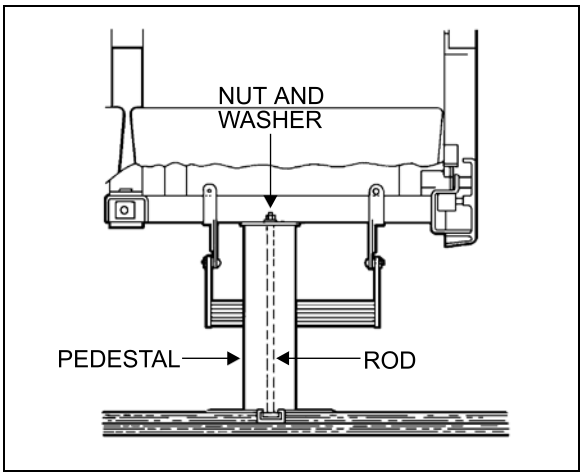

FIGURE 37: SEAT PEDESTAL ASSEMBLY 18107

NOTE
Bottom end of rod is coated with Loctite and threaded in a steel block which slides in the floor track. Removal of rod is possible if loosened from block. Otherwise, slide rod and block assembly to the front end of track after removing all seats located in front.

6. Remove seat assembly.
7. Reverse the above procedure to install seat assembly. Tighten mounting nuts.

TORQUE: 27 lb-ft (37 Nm)

NOTE
On newer vehicles, the rod consists of a carriage bolt inserted in a square plate sliding in the floor track. Removal is possible only by the front or rear end of track.

15.3 UPHOLSTERY MAINTENANCE

Coach seats are lightweight, with foam-padded backs and cushions. For both appearance and wearability, best results are obtained if upholstery is cleaned at regular intervals before dirt, dust and grit have been ground into the fabric. Seat fabric is made of 50% wool, 33% cotton, 9% nylon, and 8% acrylic.

15.3.1 Routine Cleaning

All that is required to remove the dirt is a gentle beating with the hand or the back of a brush. This will bring the dirt to the surface where it is easily removed with a vacuum or brush in the direction of the pile which can easily be recognized by running a hand lightly over the pile. If the fabric become excessively dirty, particles of grit will cause gradual wear, reducing the life span of the fabric.

15.3.2 Dry Cleaning

If covers are to be removed for cleaning, dry cleaning is recommended since washing might cause some shrinkage, preventing the covers from being reapplied to the seats without damage. Other than spot cleaning the covers while they are in place, dry cleaning is not recommended, since the resulting fumes could be hazardous in the confines of the coach and the solvent could be detrimental to the foam padding of the seats.

15.3.3 Cleaning With Covers in Place

The most effective and economical method to clean the fabric seat covers is by washing with either an approved foam upholstery cleaner or with a mild household detergent.

Thoroughly vacuum the upholstery. Remove any spots or stains before the seats are washed to avoid a cleaning ring.

Dilute household detergent or liquid foam cleaner according to directions on the container. Pour a small quantity into a flat pan and work into a thick foam with a sponge or brush.

Apply only the foam to the fabric with a sponge or brush. Clean a small area of the fabric at a time with the foam. DO NOT SOAK. Rub vigorously.

Sponge the suds from the fabric with a clean sponge or cloth moistened with water. Rinse the sponge or cloth often and change the water when it becomes dirty.

Allow the upholstery to dry completely before the coach goes back into service. To speed up drying, excess moisture can be blown off the fabric with compressed air.

⚠ **CAUTION**
Oil in the air line will soil the fabric. Blow the line clear and test air discharge against a plain white piece of paper. It is also effective to press the edge of a flat hardwood stick down on the cushion and slowly draw it across the fabric.

Even very soiled areas can be returned to their original appearance by a thorough cleaning, but a regular schedule of cleaning that keeps the

upholstery reasonably clean at all times will greatly enhance the life span of upholstery.

16. COACH SIDE WINDOWS

Seven passenger side windows are provided on each side on H3-41, while the H3-45 has eight. They are made of fixed, single or double-glazed, heat absorbing AS-3 glass. Windows are mounted in painted aluminum extrusions, which hold the glass in place from the top rail of the coach. The extrusion also serves as a hinge to allow the window to swing open when needed. The single-glazed windows are made of tinted tempered safety glass, while the double-glazed windows are made of tinted tempered safety glass outside and clear tempered glass inside.

The two trapezoidal windows are also mounted on an aluminum extrusion (except for H3-45 VIP, where they're mounted with adhesives. Refer to *"Adhesive Mounted Windows"* in this section, for more information on this type of installation). The trapezoidal windows are made of fixed, double glazed, heat absorbing AS-3 tempered safety glass inside and tempered glass outside.

16.1 EMERGENCY EXIT WINDOWS

Three of the windows on each side serve as emergency exits on the H3-41, while there are three of them on curb side of the H3-45, and four on driver's side. See figures 30 and 31.

Except for the window upper edge, the three other glass edges are unprotected, which causes the workers to be exceptionally careful when manipulating or installing such windows.

In addition, when it becomes necessary to lay down the unprotected edges of the glass window, never use a steel or concrete floor support. It is recommended to use a wooden support, even better, a padded surface.

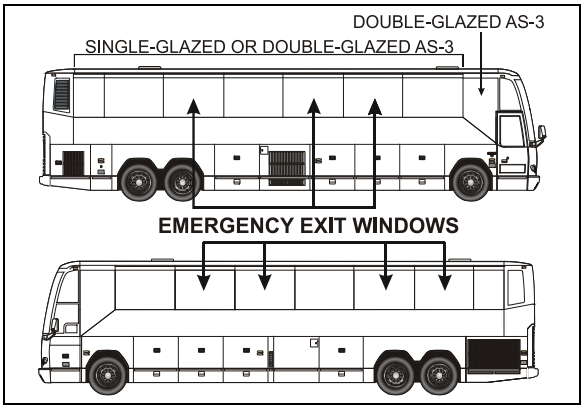

FIGURE 38: H3-45 COACH 18519

An emergency exit window can be opened by pulling the lower part of the release bar to disengage the safety latches, and then by pushing out the window frame (Figure 40).

Emergency operating instruction decals are affixed under each emergency exit window. To close the window, pull back the window and push down the release bar.

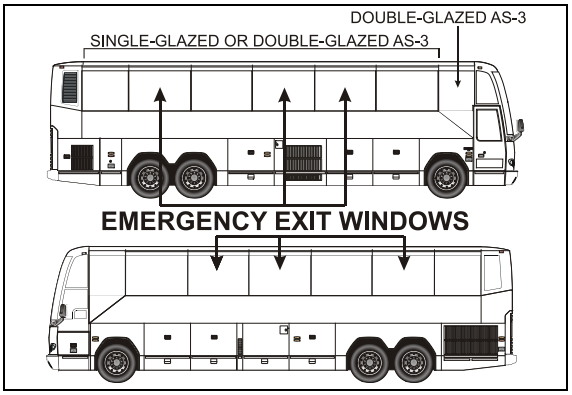

FIGURE 39: H3-41 COACH 18520

16.2 EMERGENCY EXIT RELEASE BAR

The emergency exit release bar system is generally maintenance free.

It has been designed to answer the twenty pound resistance criteria for opening the emergency window. If this handle should be replaced:

1. Remove the screws and bolts securing it to the emergency exit window;
2. To install a new release bar, reverse the procedure.

NOTE
Check the legal twenty pound maximum resistance to be sure to comply with regulations.

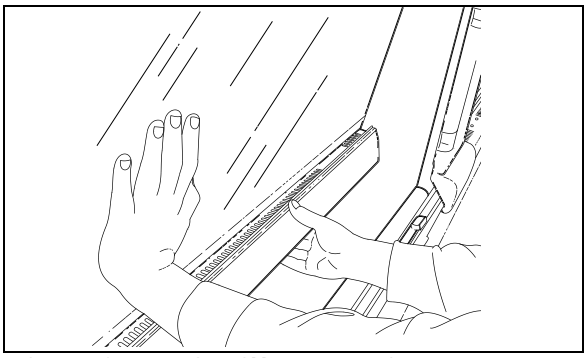

FIGURE 40: EMERGENCY EXIT WINDOW 18391

16.2.1 Emergency Exit Window Adjustment

Emergency exit windows should be checked periodically for easy opening and closing. Pulling the lower part of the release bar with both hands placed near the safety latches should disengage both locks on the window simultaneously. The tension required to release the window should not exceed twenty pounds (9 kg) of force.

The release bar mechanism itself has been designed such as no adjustments are necessary.

If too much effort is required to disengage the locks when pulling the release bar or if the window doesn't close tightly or rattles, check for interference by foreign objects or nearby parts into mechanism, such as the microswitch, rubber seal, wires, etc. Correct situation immediately.

NOTE
Tangs on the lock must be in a horizontal position.

16.3 FIXED WINDOW REPLACEMENT

When it becomes necessary to replace the glass of a fixed-type window, follow this procedure:

1. Unscrew the decorative plate and the bottom window bar in order to get access to the window retaining devices.
2. Remove the window bottom retaining bolts.
3. Push the glass window out ninety degrees (90°).

WARNING
The window may fall out.

4. The window is free and can be unhooked.
5. Reverse procedure to install a new one.

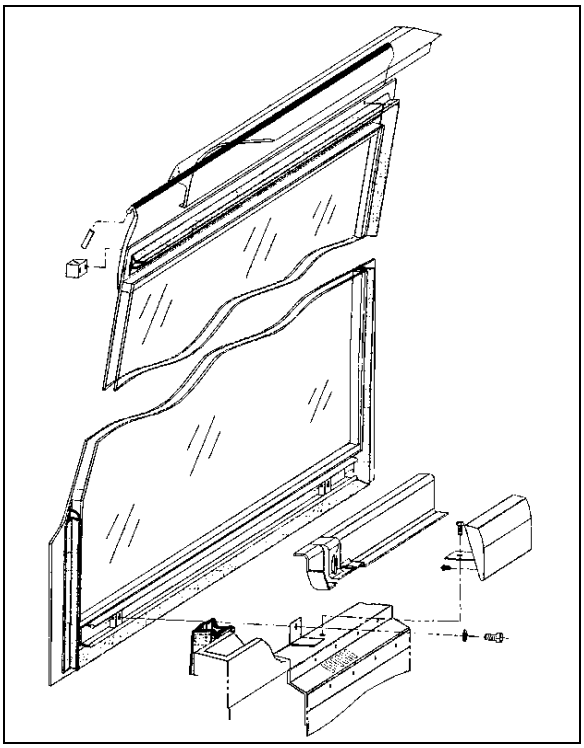

FIGURE 41: FIXED WINDOW 18434

NOTE
For all window replacement, it is extremely important to center the top side between the window dividing posts with great precision in order to be able to attach the bottom of window and the structural posts.

16.4 EMERGENCY EXIT WINDOW REPLACEMENT

1. Lift the bar release system and follow the same procedure mentioned above for fixed windows.
2. Remove the stop blocks from the top exterior of the window.
3. Reverse the procedure to install a new emergency exit window.

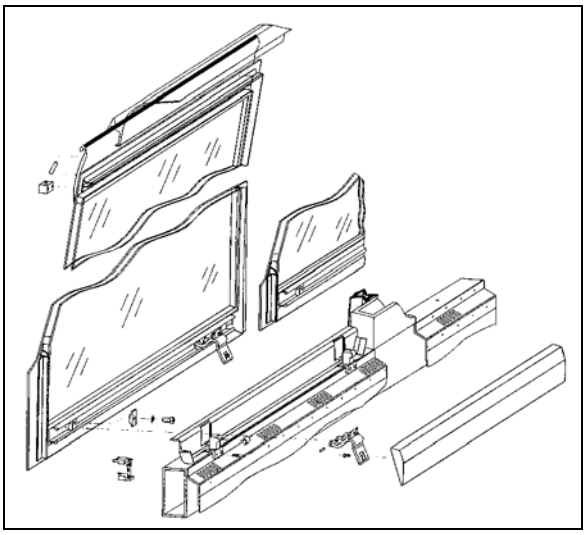

FIGURE 42: EMERGENCY WINDOW 18435

16.5 TRAPEZOIDAL WINDOW REPLACEMENT

Apply procedure for fixed window replacement described in this section but with these variations:

- The angle at which the window will detach is considerably smaller (about 45°);
- These windows are also glued to the structure at certain areas on their perimeter. Note where adhesives are used and apply gluing techniques at these areas to complete replacement of these windows.

16.6 SMALL REAR WINDOWS REPLACEMENT

These small windows are located at the vehicle's rear end, just forward of the lavatory.

Apply procedure for fixed window replacement described in this section but with these variations:

- The angle at which the window will detach is considerably smaller (about 45°);
- These windows are also glued to the structure at certain areas on their perimeter. Note where adhesives are used and apply gluing techniques at these areas to complete replacement of these windows.

Both the trapezoidal windows and the small rear window are fixed in place with adhesives. They are not serviceable, in the event that they may need replacement.

16.7 ADHESIVE-MOUNTED WINDOWS

These windows are located in the vehicle's front and rear caps (Figure 43).

The adhesive-mounted windows are fixed, double-glazed, heat absorbing AS-2 or AS-3 glass mounted in their opening with polyurethane windshield adhesive. The double-glazed windows are tempered safety glass outside and inside.

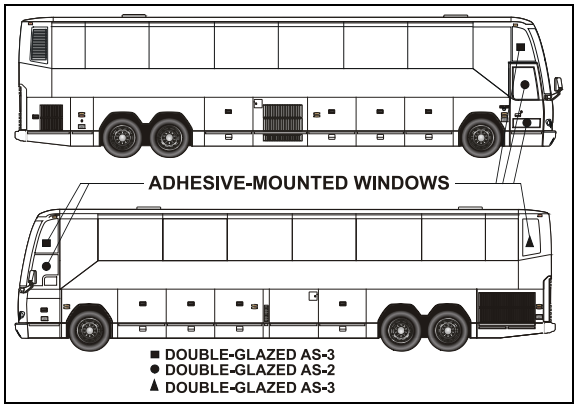

FIGURE 43: ADHESIVE-MOUNTED WINDOWS 18494

16.7.1 Glass Window Replacement

Items Needed:

- Scraper with new blade;
- Masking tape;
- Tremshield tape (Prevost #681089);
- Chix cloths (Prevost #682384);
- Isopropyl alcohol or enamel reducer or NAPA 6383 surface cleaner;
- Sika 205 cleaner;
- Sika 255 F.C. adhesive;
- Disposable vinyl gloves;

WARNING

Wear disposable vinyl gloves during this procedure. Do not smoke. Dispose of unused toxic material properly. Heed all warnings on product containers.

1. Remove old window glass and scrape off remaining material up to 1/16" to 1/8" (2 to 3 mm) thick.

NOTE

Hardened adhesive will not remove easily. A new blade works best to remove all adhesive residue using care not to damage the fiber structure.

2. Place the new window glass in the opening and center it to leave an even gap top and bottom, and from side to side.

NOTE

*Use small shims to raise the glass in proper position. Shims can be cut from the tremshield tape (*Figure 44*).*

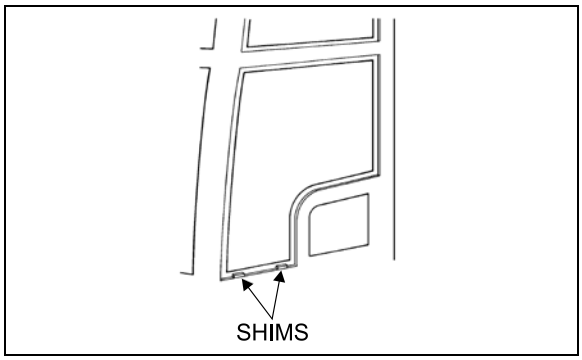

FIGURE 44: ADHESIVE-MOUNTED WINDOW 18079

3. Hold the window glass centered and have an assistant mark the inside contour of the opening on the glass with a china pencil. Remove glass and place it on a table with the pencil mark facing up.

4. Place masking tape on the inside surface of the glass to just cover the china pencil mark, leaving the outer surface exposed for the adhesive. This will make cleanup much easier. For ease of removal, do not overlap the tape at corners.

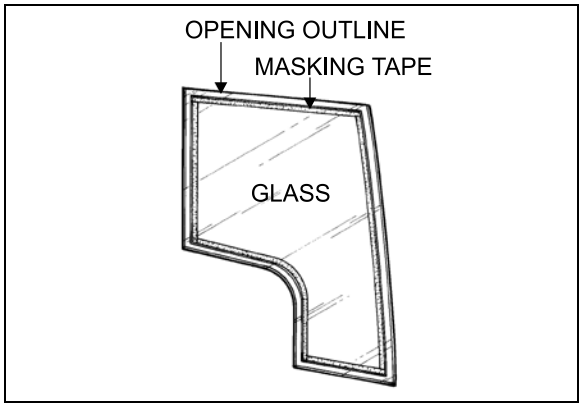

FIGURE 45: ADHESIVE-MOUNTED WINDOW 18080

5. Clean all around the window opening and the window glass edge with Sikaflex 205 (shake well before applying). Let dry 5-6 minutes minimum but no more than 8 hours.

CAUTION

There must be absolutely no silicone on glass or channel or Sikaflex 255 FC will not stick.

6. Put masking tape on the inner and outer contour of the window opening on the structure, approximately 1/16" (1,5 mm) from the edges of the contour.

7. Install Tremshield tape around the sealing surface of the window opening.

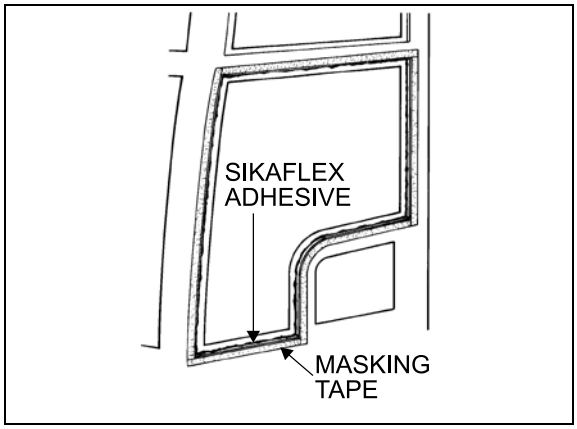

FIGURE 46: ADHESIVE-MOUNTED WINDOW 18081

8. Apply a generous bead of Sikaflex-255 FC polyurethane adhesive on the sealing surface around the window opening from outside the vehicle.

NOTE

To ease applying of Sikaflex 255 FC, it may be heated to 86° F (30°C).

NOTE

Bead should touch the side surface of the window opening.

9. Place shims correctly, and position window glass in the opening. Press firmly and evenly. Excess adhesive should flow out from behind glass.

NOTE

Add adhesive in areas where overflow is minimal or if air bubbles are present.

10. Smooth the adhesive joint using your finger (wear vinyl gloves). Remove excess

material around both sides of the window as soon as possible before adhesive dries.

NOTE
Remove most of the adhesive from the scraper or trowel with a rag, and then dip tool in heavy hydrotreated naphta (vanishing oil) after each use for cleaning.

CAUTION
Never use solvents to clean excess adhesive.

11. Remove masking tape at once, clamp window glass suitably and let dry overnight or at least 8 hours.
12. Spraying pure water on the joint will accelerate the drying process.

17. ELECTRIC AWNING WINDOW

The electric awning windows are connected directly on the batteries 24 V DC terminal block. As a result, they can be operated regardless of the state open or close of the master switch. However, the circuit is protected with fuse F41 (10A) located in the front service compartment.

17.1 OPERATION

Opening sequence: switch is set to the OPEN position. Window latch solenoid SOL1-A and SOL1-B are turned on along with M1 window motor. Once the latch is open, proximity switch PROX1 is de-activated, turning sol1-A and SOL1-B off.

Closing sequence: switch is set to the CLOSE position, turning on relay R1 which turns on M1 in reverse polarity, closing the window. Once the window is closed, PROX1 is activated, turning on SOL1-A and SOL1-B in reverse polarity latching the window closed.

17.2 WINDOW REMOVAL

Replacement awning window does not include a new motor. If in working order, transfer the motor of the replaced window to the replacement window. If not, the motor can be bought separately. When replacing the window, keep the components in working order as spare parts.

1. Push the vertical latch handle downwards to release the track and then open the window using the horizontal latch handle.
2. Take out the screw at the lower end of the track to let free the swiveling arm roller.
3. Unplug connector C7 & C9. Dismount the gas spring from the window.
4. Loosen the set screws #5 (figure 40)(rotate the arm to get to the second set screw) and disengage the swiveling arm from the motor shaft extension.
5. Push the glass window out ninety degrees (90°).

WARNING
The window may fall out.

6. The window is free and can be unhooked.
7. Reverse procedure to install a new one.

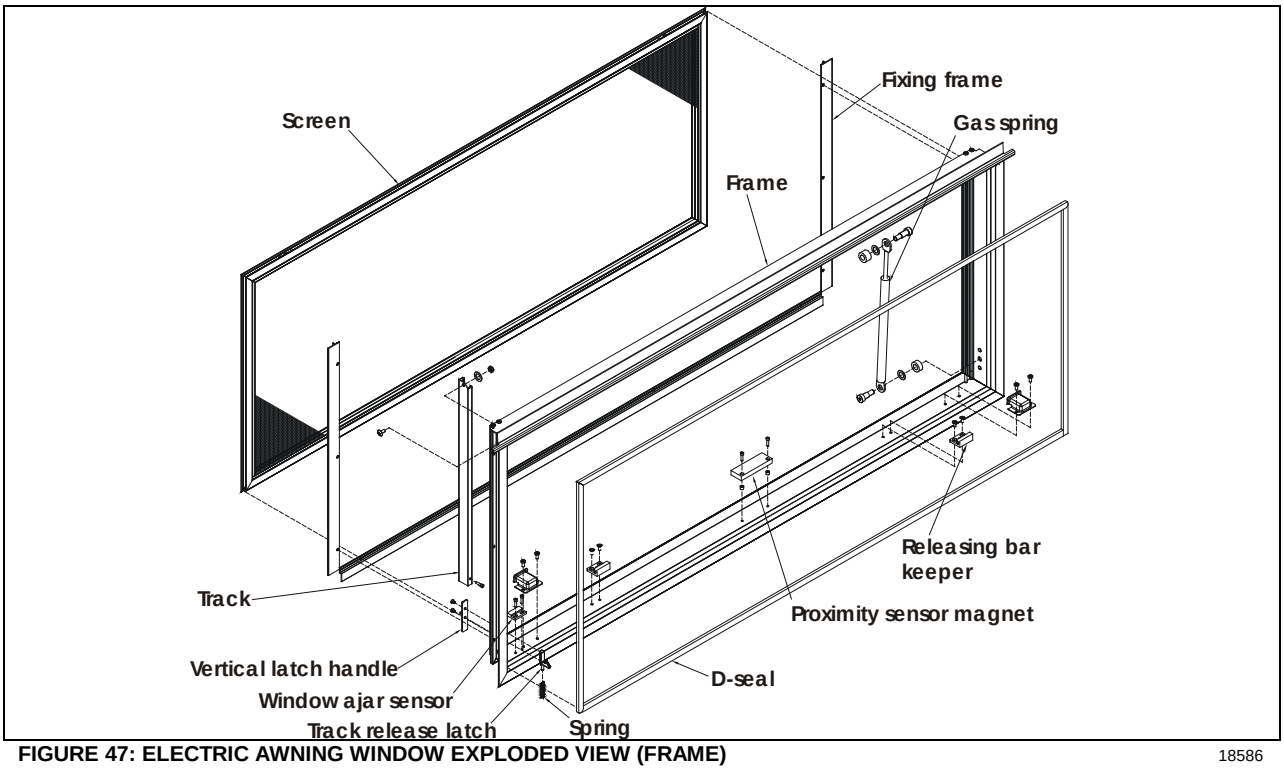

FIGURE 47: ELECTRIC AWNING WINDOW EXPLODED VIEW (FRAME) 18586

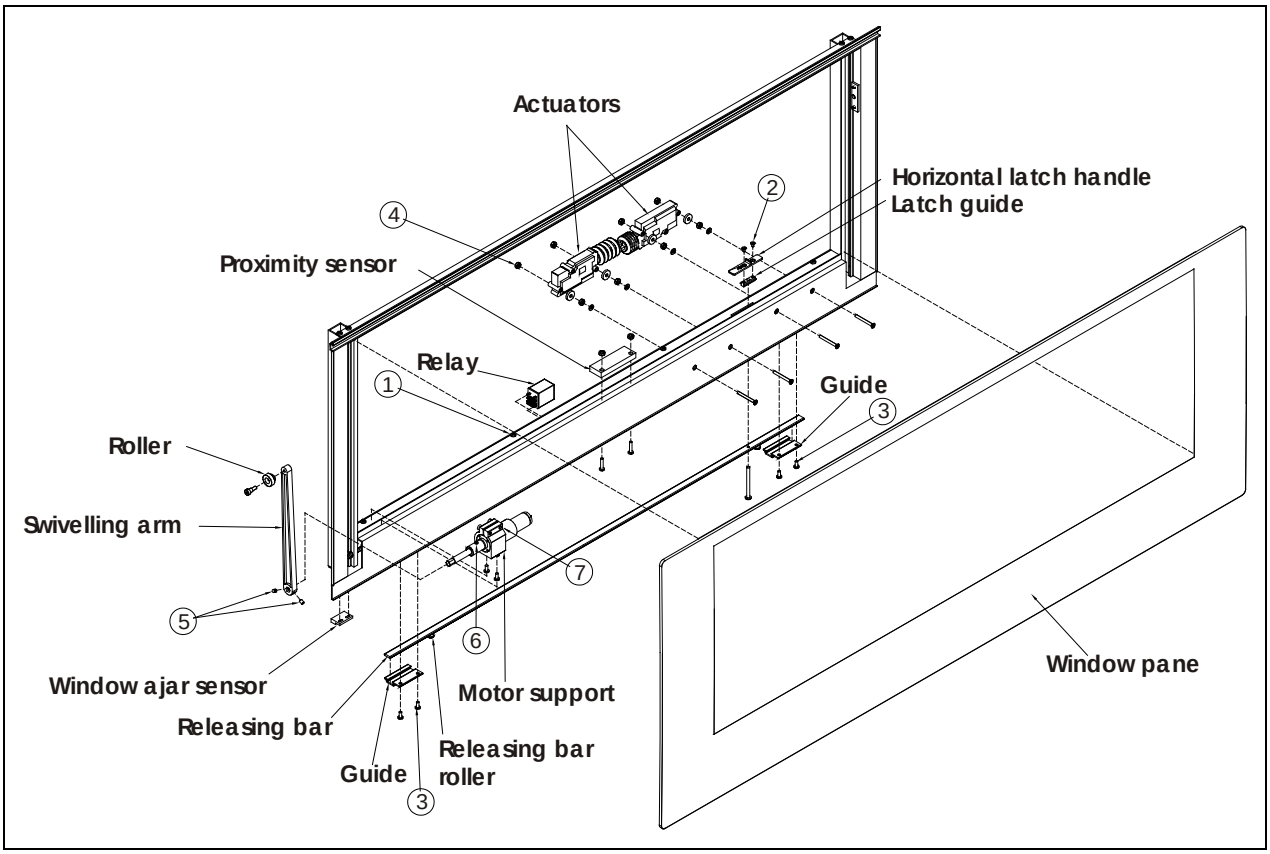

FIGURE 48: ELECTRIC AWNING WINDOW EXPLODED VIEW (SASH) 18583

17.3 ACTUATOR REPLACEMENT

1. Push the vertical latch handle downwards to release the track and then unlatch the window using the horizontal latch handle.
2. Remove actuator access cover by taking out screws #1 (8x).
3. Take out screws #2 (2x) and remove horizontal latch handle and guide.
4. Take out the guide screws #3 (4x) and remove releasing bar.
5. Unplug connector C3 or C4 from problem actuator, unscrew nuts #4 (2x) and remove the actuator.
6. Reverse operations for reinstallation.

17.4 MOTOR REPLACEMENT

1. Push the vertical latch handle downwards to release the track and then unlatch the window using the horizontal latch handle
2. Take out the screw at the lower end of the track to let free the swiveling arm roller.
3. Remove actuator access cover by taking out screws #1 (8x).
4. Loosen the set screws #5 (rotate the arm to get to the second set screw) and disengage the swiveling arm from the motor shaft extension.
5. Unplug motor connector C2 and dismount motor and support assembly.
6. The shaft extension is glued to the motor shaft. It has to be heated to break the binding to permit removal. Loosen set screw #6 and remove the shaft extension. Also loosen screw #7 and remove motor from the support.
7. Reverse operations for reinstallation.

ELECTRIC AWNING WINDOW – CONVERTER CHECKLIST	
Check the electrical circuit & proximity sensor	A: The latching system will not operate without power. Is there electrical power to the latching circuit? The horizontal latch handle, on the sill sash will be seen to move if there is power on this circuit, or it can be checked with an electrical tester. If there is no power to this circuit when the window is closed and either rocker switch are switched "ON", there is a problem with the electrical system. B: The Proximity Sensor on the sash may not be switching power to the latching circuit if the magnet is not getting close enough to the switch OR the Proximity Sensor may be broken (or stuck in one position). Is the proximity sensor switching when the window is closed?
Check the release force required to operate the horizontal latch handle	A: If the pull force required to move the latch is more than 20lbs the window will not latch properly. Average pull force during testing by manufacturer is 12lbs -15lbs. What is the force required to release the handle? Check using a force gauge (same test done by manufacturer).
Check Installation	A: If the window is too tightly installed OR if the sequence for tightening the clamping frame screws Is incorrect the window may not close properly. Was the window installed correctly? Was the correct sequence (see below) used when tightening the clamping frame screws? 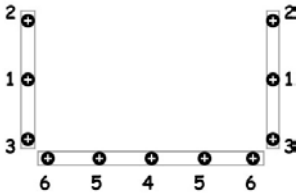 B: Removing the shipping blocks before the window is installed can create major problems. Were the shipping blocks in place during installation? C: Failure to remove the shipping blocks after installation can create interference between sash and frame. Have the shipping blocks been removed after installation? D: The window is misaligned or not installed squarely. Is there interference with any coach parts? Is there proper clearance between the bottom of the outer glass and the belt-line trim / seal?
Check for missing parts or misaligned parts	A: The frame and sash are misaligned. Is there any interference between the sash and frame? Is there clearance between the sash and the rocker switch covers? B: Releasing bar guides are missing. Check that the releasing bar guides are installed. There should be 4 installed on H windows, and 3 installed on XL2 windows.

18. ELECTRIC SLIDING WINDOW

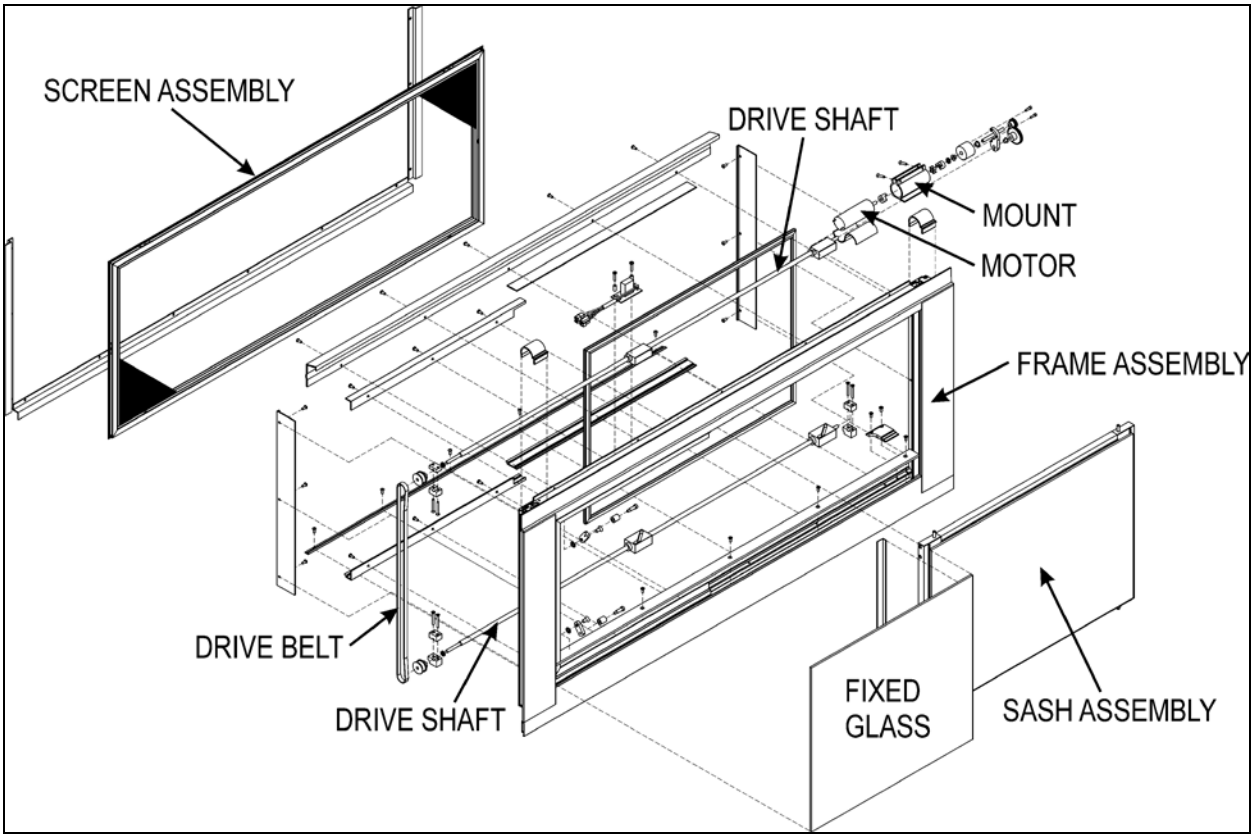

FIGURE 49: ELECTRIC SLIDING WINDOW EXPLODED VIEW

Sash Removal

1. Remove the Screen Assembly
2. Pull down on both release latches simultaneously and rotate the sash inwards approximately 10 degrees.(Figure 43)

FIGURE 50: REMOVING THE SASH

3. Lift the sash up and out to disengage the bottom of the sash from the window frame. (Figure 42)

FIGURE 51: DISENGAGING THE BOTTOM OF THE SASH

Installation

1. Align the leading edge of the slot on the lower cam follower block with the sash stop. Use the power toggle switch to obtain the correct alignment. (Figure 44)

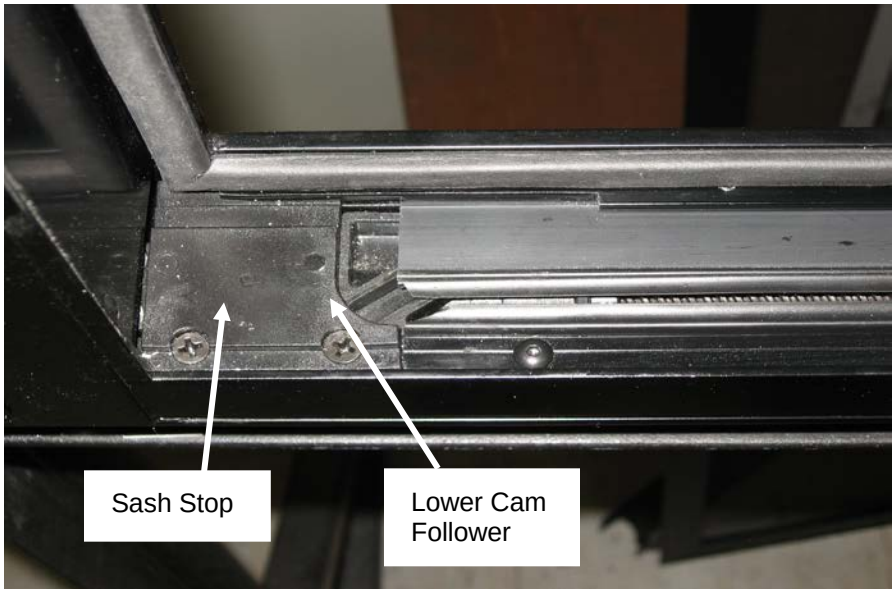

FIGURE 52: PROPER ALIGNMENT

2. Position the left hand lower corner of the sash over the front cam follower block (Figure 45)

FIGURE 53: POSITIONING THE LOWER LEFT CORNER OF THE SASH

3. Engage the sash pin with the leading edge of the slot of the cam follower block. Do the same at the rear of the sash.
4. Pull down on the release latches and rotate the sash inwards until it is parallel with the window frame.
5. Release the latches to engage the latch pins with the upper cam follower blocks.
6. Confirm that both latches are in the closed (latched) position. The upper edge of the latch opening must be aligned with upper edge of the sash opening (Figure 46)

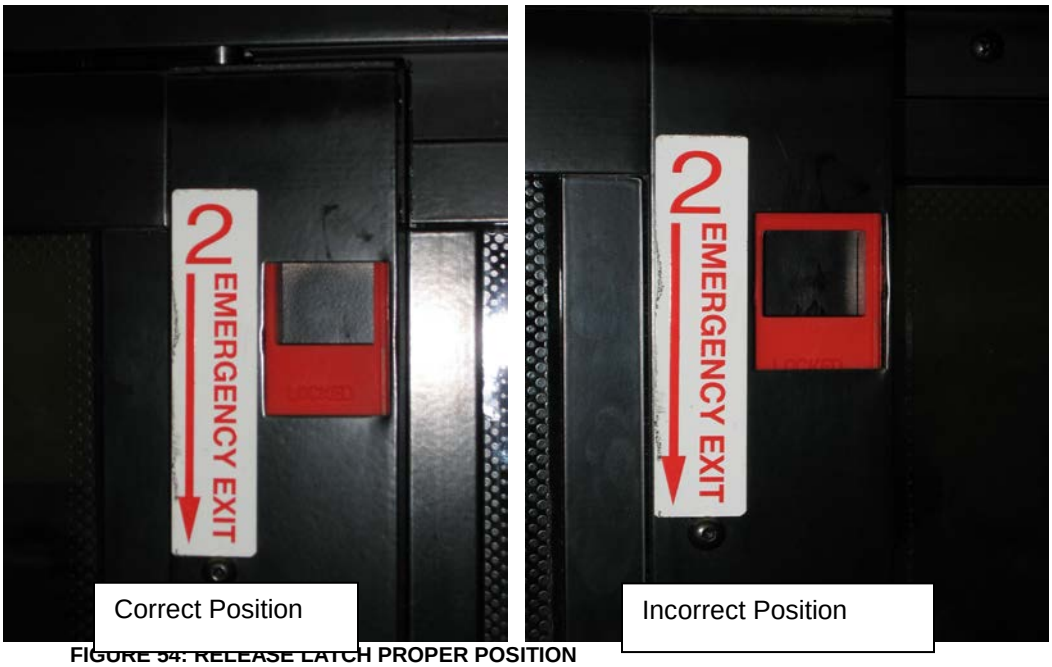

FIGURE 54: RELEASE LATCH PROPER POSITION

7. <u>* Failure to confirm this step may lead to the sash becoming disengaged with the frame and could result in personal injury.</u>
8. Operate the window to confirm that it opens and closes properly.

Install the screen assembly.

19. WINDSHIELD

The windshield is single-glazed AS-1 laminated safety glass. Each windshield side is laced to a flange around an opening in the front structure by means of a one-piece black rubber extrusion and locked with two filler strips. Proper installation of the windshield is necessary to ensure watertightness. Since glass varies in fit depending on the supplier, we recommend installing a replacement windshield obtained from Prevost Parts to ensure proper fit. Windshields obtained from other sources should be checked for proper size and curvature.

> *NOTE*
>
> *For more information on windshield removal or installation, a video is available from Prevost Parts Inc.*

19.1 REMOVAL

> **WARNING**
>
> Windshield removal and installation must be performed by more than one person. To avoid personal injury, wear protective gloves when handling the windshield glass.

1. Remove the wiper arms of the affected windshield.
2. To ease damaged windshield removal, remove the two top rubber filler strips from the rubber extrusion, then the two rubber filler strips on each side. Finally, remove the rubber filler strip located on top of rubber extrusion bottom section. Leave the bottom filler strip in place.

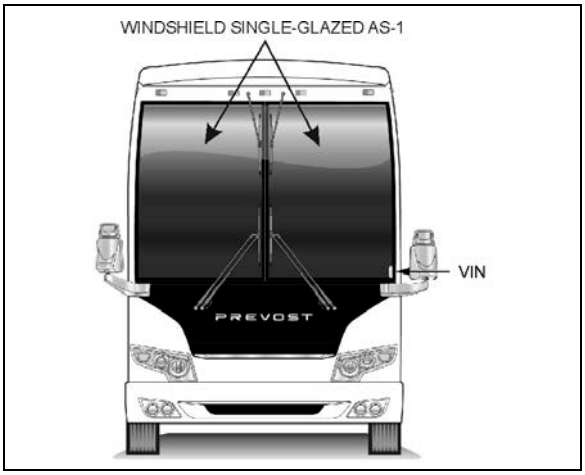

FIGURE 55: WINDSHIELD 18495A

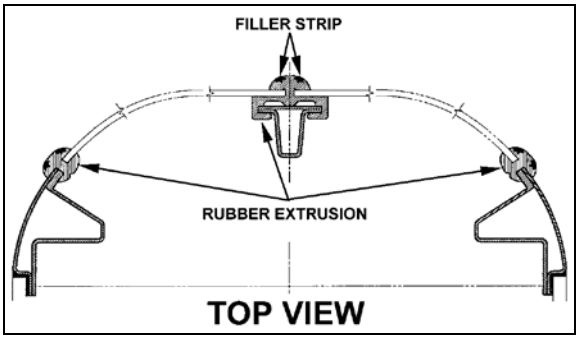

FIGURE 56: WINDSHIELD INSTALLATION TOP VIEW 18098

3. From inside of vehicle, push against the top L.H. side corner of windshield for the removal of a R.H. side windshield. If the L.H. side windshield had to be removed, you would have to push against the top R.H. side corner.

> *NOTE*
>
> *We are referring to the L.H. and R.H. side as viewed from the inside of the vehicle.*

4. At the same time, another person gradually lifts the rubber lip from the vehicle exterior using a plastic spatula from top to bottom.
5. Remove the entire damaged windshield and broken glass if applicable.
6. Clean the rubber extrusion channel with Sika 205. Refer to heading *"Windshield Installation Only"* in this section for instructions on how to reinstall windshield.

> *NOTE*
>
> *If the rubber extrusion is damaged, remove and discard it, then clean the windshield opening with Sika 205. Refer to heading "Installation of Rubber Extrusion and Windshield" in this section for complete instructions.*

19.2 WINDSHIELD INSTALLATION ONLY

1. Spray rubber extrusion with soapy water to ease windshield insertion.
2. Insert rope into rubber extrusion leaving enough length at each corner to make a loop. Spray soapy water onto rope and rubber extrusion (Figure 57).
3. Slide windshield into rubber extrusion groove starting with the bottom curved side edge. Using a plastic spatula, move the rubber extrusion lip aside to gradually insert the windshield into the groove.

NOTE
Spray lubricant on a regular basis to ease windshield insertion.

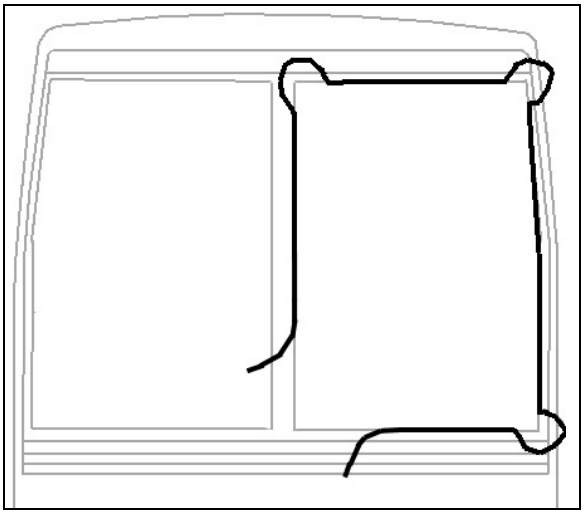

FIGURE 57: WINDSHIELD INSTALLATION USING ROPE

4. Using the same type of plastic spatula, repeat the same operation from inside of vehicle, gradually inserting the windshield into the groove.

NOTE
Make sure windshield bottom edge is well inserted into the rubber extrusion groove before proceeding with the sides.

5. Then, working from both sides of windshield bottom to top, gradually move the rubber extrusion lip aside to insert the windshield into the groove. Use also lubricant on the inside of vehicle to insert the windshield into the rubber extrusion groove.

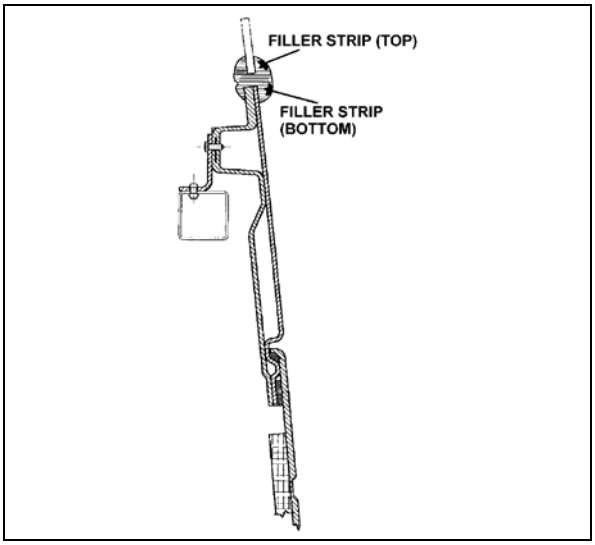

FIGURE 58: WINDSHIELD INSTALLATION SIDE VIEW 8099

6. Insert the top curved corner then finish with the top of windshield.

7. At the top of windshield, clean surface between fiberglass and rubber extrusion using Sika 205.

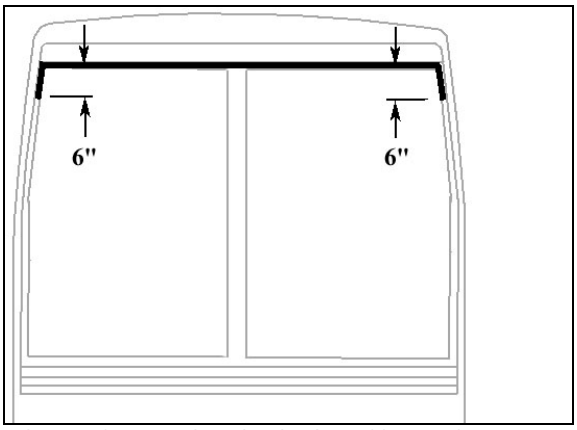

FIGURE 59: APPLICATION OF SIKA 221 BLACK

8. Apply Sika 221 black (Figure 59) between fiberglass and rubber extrusion.

9. Spray filler strip and rubber extrusion groove generously with lubricant.

NOTE
Filler strips retract with time. Install ends of filler strips as tight as possible in the V-channel.

10. Using the special filler insertion tool, insert the filler into the bottom rubber extrusion groove. Gradually insert filler ensuring to leave a 2 inch excess length at the filler extremity.

11. Every 6 inches or so, it is important to compress the filler due to its tendency to contract during drying process.
12. When filler insertion is almost complete, cut filler at a 45° angle leaving ¼" of excess length to thwart filler contraction over time then insert filler into groove.
13. Continue with side filler strips and finish with top ones.
14. Reinstall windshield wiper and destination sign if applicable.

19.3 INSTALLATION OF RUBBER EXTRUSION AND WINDSHIELD

CAUTION

The black rubber extrusion securing the windshield in the opening fits correctly in only one position. Find the correct position of the rubber extrusion now, and make reference marks with a china marker to avoid searching for the correct position later in the procedure.

1. Clean the windshield opening sealing surfaces with Sika 205 and let dry 1 to 2 minutes.
2. Clean the rubber extrusion with wiping towels soaked with Sika 205 and let dry 1 to 2 minutes.

NOTE

Force the soaked towels in the channels for good cleaning in these critical areas.

3. Find the reference marks made earlier and install the rubber extrusion in the windshield opening.
4. Install windshield as per paragraph 10.2: *"Windshield Installation Only"*.

20. BODY PANELS AND DOORS

Each of the doors should be checked for proper operation. This includes latching. Also, inspect each of the doors for damage, missing, or loose parts. Repair or replace those parts as needed.

Unless otherwise noted, body panels and doors should be aligned and centered with surrounding panels. In general, a gap of ¼ inch (6 mm) is desirable between panels. Refer to figure 46 for specified gaps.

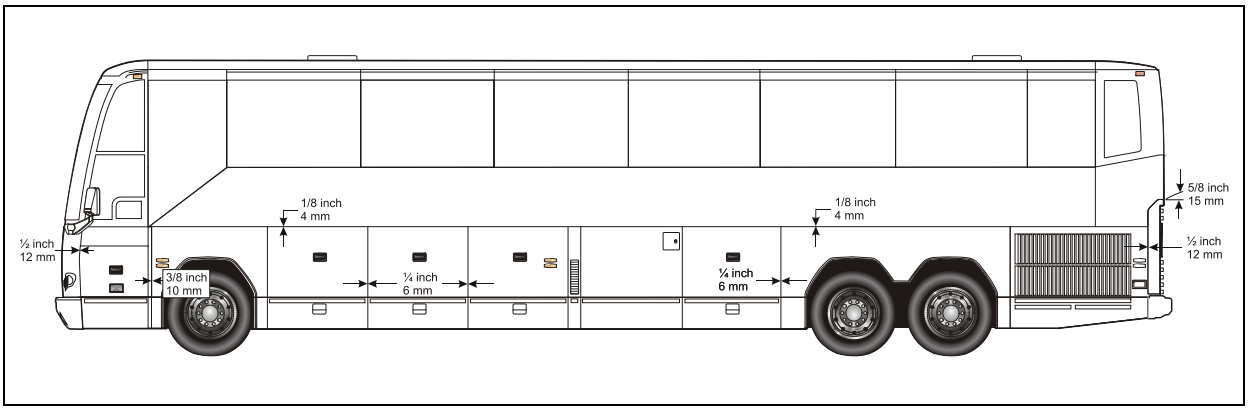

FIGURE 60: BODY PANEL SPACING 18496

21. WHEELCHAIR LIFT ACCESS DOOR

21.1 INSTALLATION

CAUTION

Install the sliding door onto a suitable lifting device that will allow proper lifting and positioning.

1. Lift and move the sliding door near the opening.
2. Push the door into the opening making sure the positioning lugs are properly inserted into their housing then pivot the main hinge and secure the door using 4 bolts. Do not fully tighten the bolts yet.
3. Remove the lifting device from the sliding door.

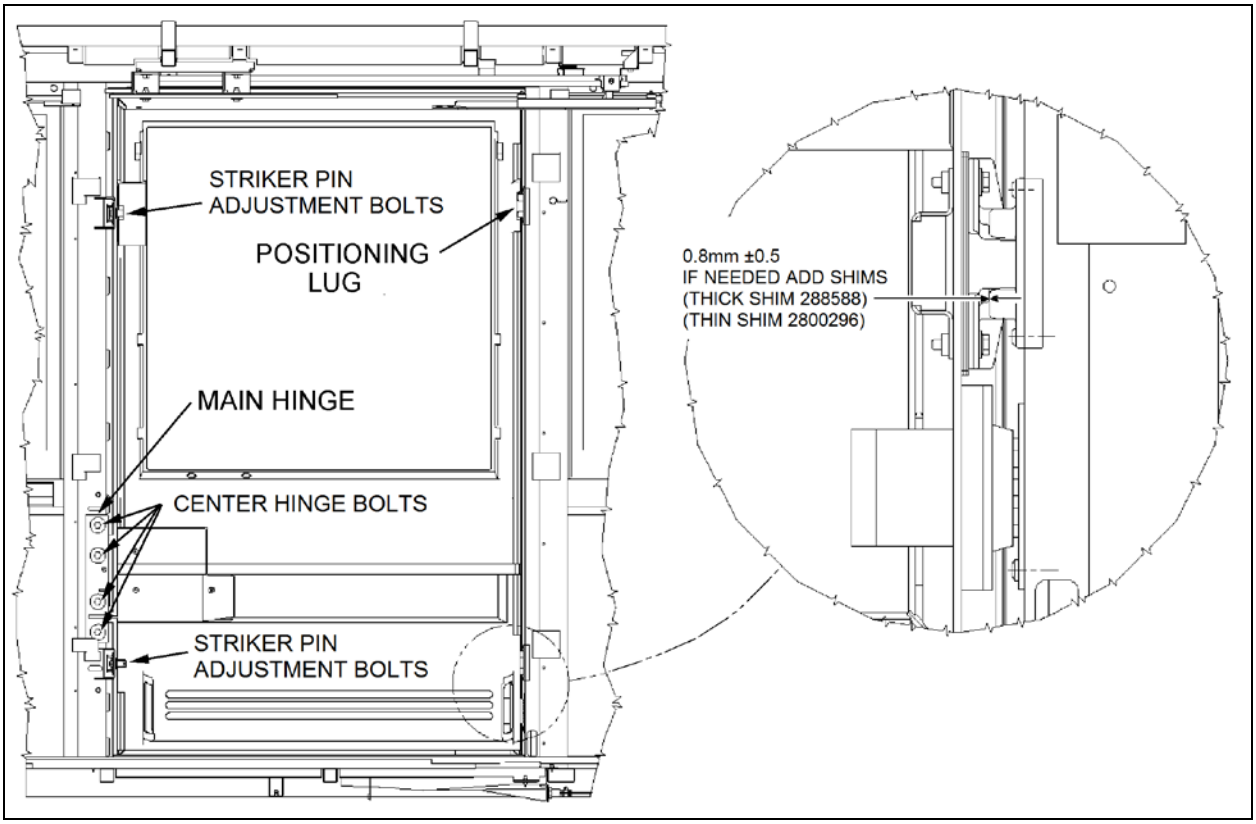

FIGURE 61: WCL SLIDING DOOR INSTALLATION **18739**

21.2 ADJUSTMENT

1. Adjust sliding door height with reference to the side panels and windows.
2. Slide the top rail into the upper arm then bolt the rail to the structure. Do not fully tighten (Refer to Figure 62).

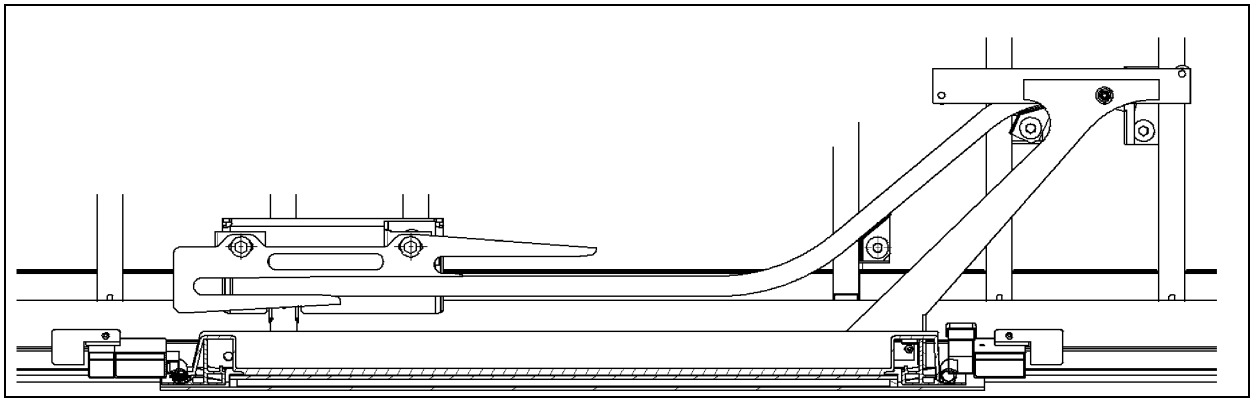

FIGURE 62: WCL UPPER ARM AND RAIL

3. Pull the door in or push from the outside to adjust the door with reference to the vehicle outside surface.

4. - Unfasten the upper arm bolt located on the door side.
   - Position the top rail at 3mm from the ceiling bracket.
   - Force the upper arm down then tighten the upper arm fixing bolt.
   - Pull the upper rail towards the inside in order to remove the play between the roller and the upper rail then tighten the rail fixing bolt at the back.
   - Push the lower rail towards the outside in order to remove the play between the roller and the lower rail then tighten the rail fixing bolt at the back.

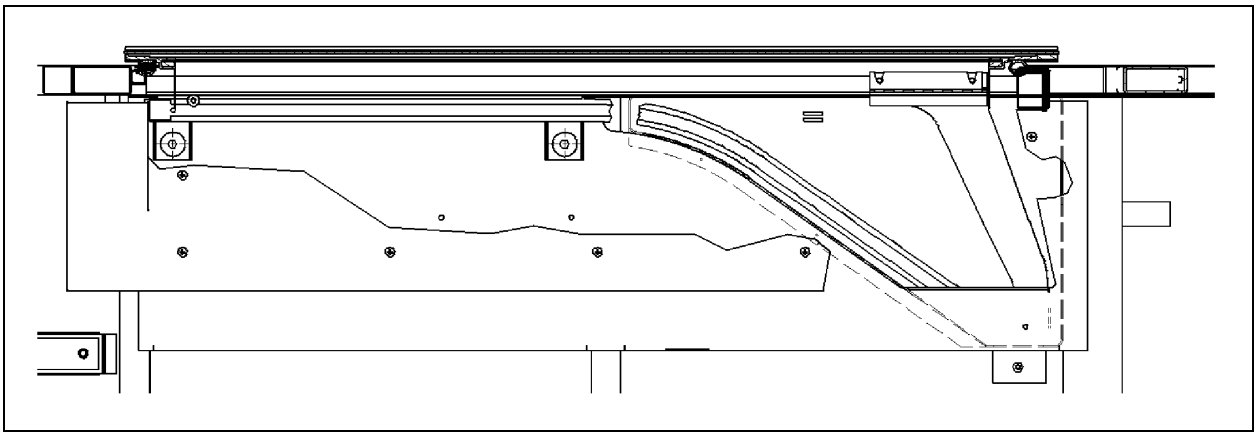

FIGURE 63: WCL LOWER RAIL INSTALLATION

5. Adjust the gap between the positioning lugs and their housing, required gap: 0.5 – 1.5mm. Add shims underneath the lugs to get the proper adjustment.

6. Take away the plays from the upper arm assembly by lifting the main hinge using a crowbar. Tighten the main hinge bolts

TORQUE: 31-38 lb-ft (42-52 Nm)

NOTE
Do not exert too much force to lift the door.

7. Open WCL sliding door completely.

8. - Pull the upper rail towards the inside in order to remove the play between the roller and rail then bolt the rail at front and center. Add some shims if necessary between the rail and the structure before tightening the bolts.

- Push the lower rail towards the outside of the vehicle in order to remove the play between the roller and rail then bolt the rail at front and center. Make sure the rollers stay in contact with the support when starting to close the door.

9. Adjust the distance between the bottom of the guide and the roller when the door is completely open. Required distance: 2 – 3mm. Make sure the roller stay in contact with the guide.
10. Install and adjust striker pins.

TORQUE: 54-66 lb-ft (73-89 Nm)

NOTE
Make sure that a 2mm gap exists between the door structure and the striker.

11. Adjust latches releasing, the two latches must open simultaneously.

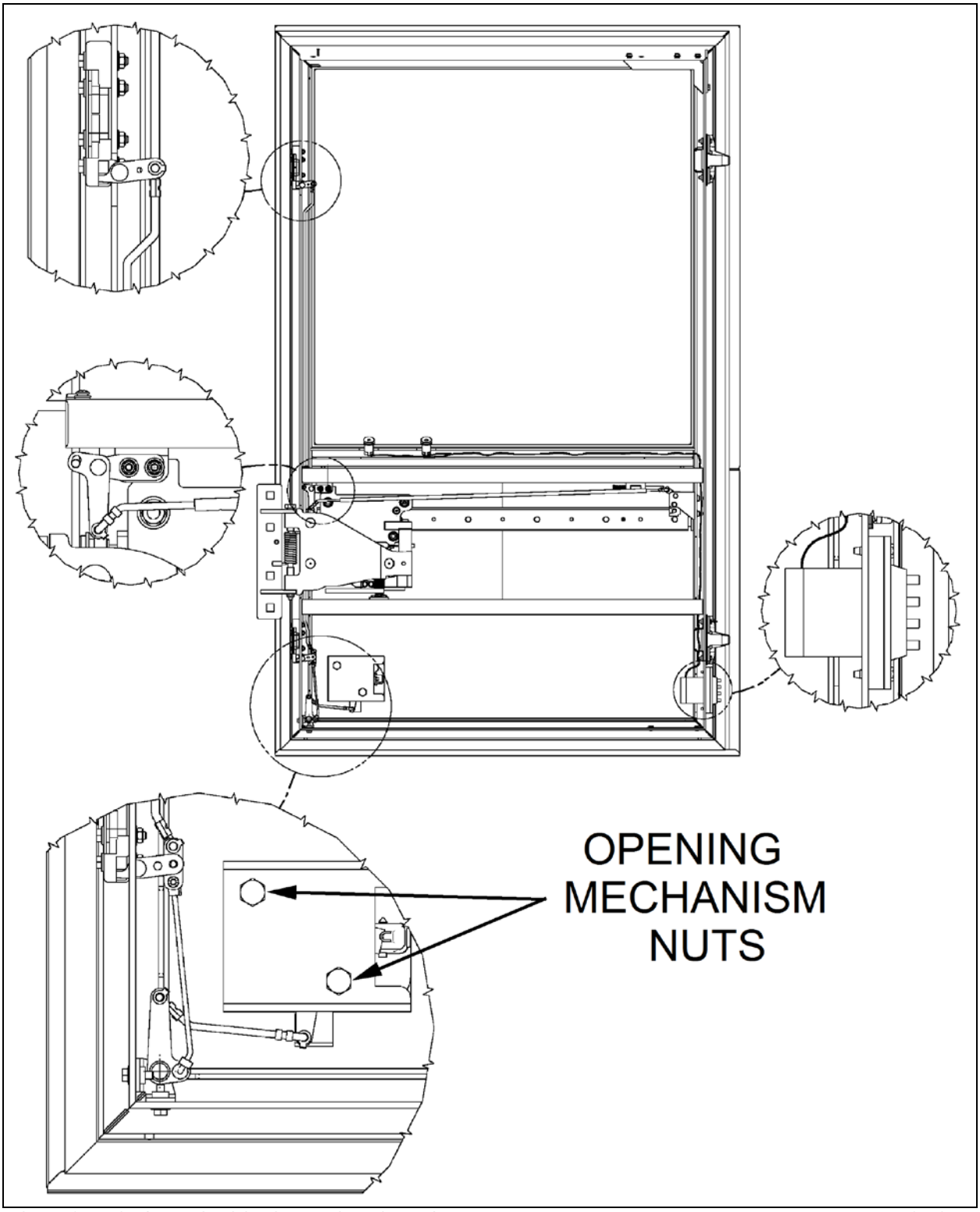

FIGURE 64: WCL SLIDING DOOR OPENING MECHANISM **18740**

22. BAGGAGE COMPARTMENT DOORS

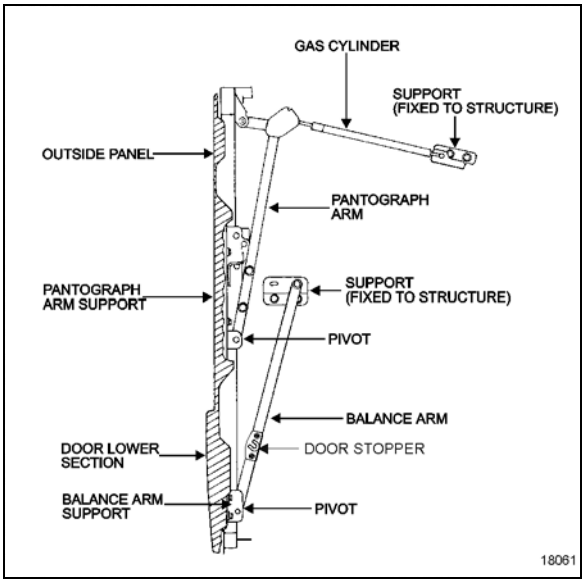

FIGURE 65: BAGGAGE COMPARTMENT DOOR

There are 6 pantograph doors serving as baggage compartment doors on the H3-41, while there are 8 on the H3-45 and the V.I.P (depending on options, VIP model may have even more pantograph doors). Each of these doors is of identical design. A centrally mounted, key-lockable door handle unlatches the door which can then be pulled out and raised up in a path parallel to the side of the vehicle. The door is held in open position by two fully extended gas-charged cylinders, giving clear access to the opening of the baggage compartment.

From its fully open position, the door can be closed by pulling down on the door panel, and letting go when you sense the door will close on its own. The door will easily hinge its way back in the contour of the compartment opening and will be held closed by two latches. Each door can be opened by lifting the centrally mounted handle to unlatch the door and lifting it all the way up. If the door does not remain in the fully open position, one or both gas cylinders on that door is (are) defective. To test the cylinders, first support the door in the fully open position with proper equipment. Disconnect the rod end of one cylinder and try to retract the rod. If strong resistance is felt, the gas cylinder is in good condition and can be reinstalled. If the rod retracts with little effort, the cylinder is defective and should be replaced at once. Test the other cylinder on that door the same way.

NOTE

In case of malfunctioning or in specific situations, use door stoppers to secure the door in the open position.

22.1 PANTOGRAPH ADJUSTMENT

WARNING

Park vehicle safely, apply parking brake, stop engine and set batteries master switches to the “OFF” position prior to working on the vehicle.

For more information concerning baggage compartment door adjustment, refer to the following procedures. You will find these procedures at the end of this section.

- ***SAV00589***
- ***SAV00590***

NOTE

Refer, if needed, to Figure 65 *for identification of door components.*

If the door bends when opening or if pantograph does not function properly, it is probably because the pantograph arms are misadjusted.

Measure distance between a pantograph arm end and a straight edge resting on structure. Repeat procedure for the other arm. The distance on each side should be equal. If not, bend appropriate arm until desired measure is obtained (Figure 67 & Figure 68).

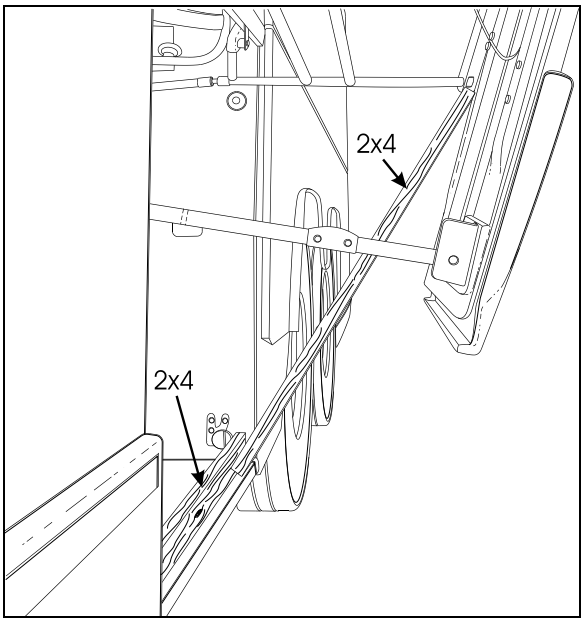

FIGURE 66: PANTOGRAPH ADJUSTMENT 18319

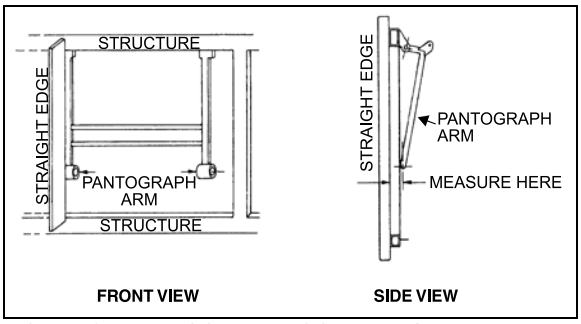

FIGURE 67: PANTOGRAPH DOOR ADJUSTMENT 18062

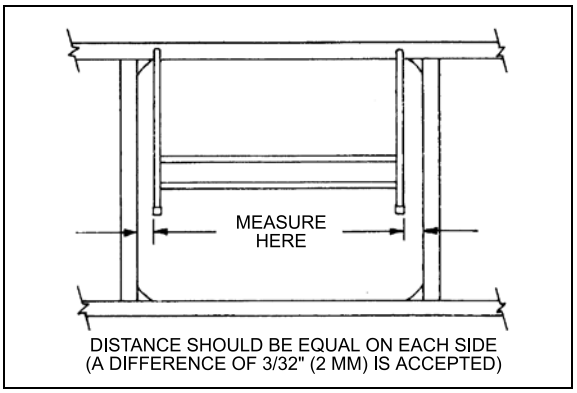

FIGURE 68: PANTOGRAPH DOOR ADJUSTMENT 18063

Doors can be adjusted by bending the arms as follows:

1. Open the door halfway up.
2. Install a piece of wood (a 2x4 will do) along the bottom of the baggage compartment. Arrange so it rests against the striker pins and is prevented from sliding further in the compartment.
3. Install another piece of 2x4 between the first piece and the bottom of the pivot of the lowest (or shortest) pantograph arm, (Figure 66).
4. Pull down on the opposite side of the door to bend the door around the pantograph arm pivot (prevented from moving by the 2x4).
5. When the door is straight, remove the 2x4's and check door operation and fit. A difference of 3/32" (2mm) between both sides is accepted (Figure 68).
6. Repeat as necessary.

23. DOOR HANDLES

Compartment door handles are non-serviceable. When a door handle has to be removed, proceed as follows:

1. Unscrew the four (4) retaining screws;
2. Remove the two (2) wires connecting the handle to the door latch locking mechanisms.
3. To install a new handle, reverse the procedure.

24. ENGINE COMPARTMENT DOOR

The engine compartment rear door (Figure 69) rises in the same way as the baggage compartment doors and is held open by three gas-charged cylinders (Prevost # 980024). The engine compartment opens by lifting a handle accessed from the R.H. side of the engine compartment.

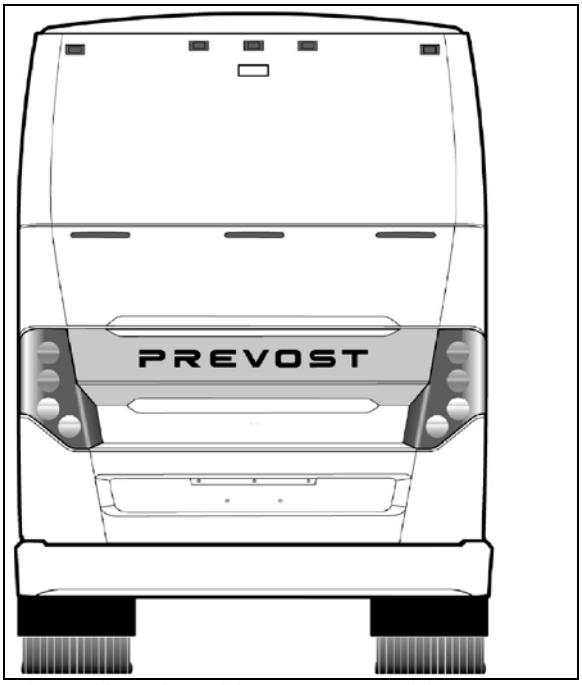

FIGURE 69: ENGINE COMPARTMENT DOOR 18497

When pushed up, the handle pulls on two steel wires, each steel wire connected to its respective door latch locking the rear door. Both steel wires are looped at the release handle and can be adjusted to proper length to ensure positive release of both catches when the handle is raised.

24.1 ENGINE DOOR ADJUSTMENT

As indicated above, the engine door mechanism is similar to the baggage door mechanism using a pantograph and 3 gas cylinders to move the door up and down.

For a minor horizontal or vertical adjustment:

1. Open the door mid-height;
2. With the help of an assistant, pull down one side of door while holding up the other side to bend the pantograph arms in the desired position;
3. Close the door and check the top edge parallelism between the door and the vehicle end cap structure. The space may be somewhere between 10 and 15 mm;
4. Repeat until satisfied.

24.2 MINOR TOP EDGE DEPTH ADJUSTMENT

Two rubber spring loaded stops may be adjusted. They are located near the top edge on each side of the rear door.

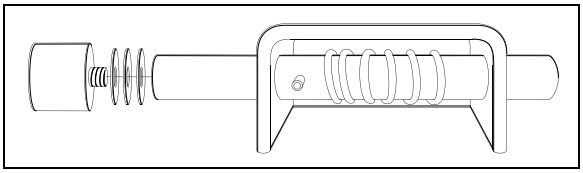

FIGURE 70: DOOR STOP 18324

To adjust:

1. Open door.
2. Unscrew rubber stop.
3. Add or remove washers as needed.
4. Firmly screw back rubber stop.

24.3 MINOR LOWER EDGE DEPTH ADJUSTMENT:

1. Open door.
2. Slightly loosen the striker pins on each side of door.
3. Using a hammer, strike striker pin gently in the desired direction (in or out).
4. Close the door slowly and check fit.
5. Repeat 3 and 4 to adjust the other striker pin.
6. When door depth is completed on the four corners, both vertical door sides should be parallel to the vehicle body structure.
7. Firmly tighten the striker pins (2) to lock them in position.

25. ENGINE AIR INTAKE GRILL

When needed, the engine air intake grill can be changed:

1. Cut the seal around the grill with a sharp edged knife.
2. Remove the grill from the vehicle.
3. On the vehicle grill opening, using the knife, remove as much adhesive as possible.
4. Sand the new grill backing edge to remove the glossy surface.
5. Clean with alcohol, wipe dry.

6. Apply SIKA 205 primer to the grill opening and the grill edges. Allow to dry at least 2 minutes for chemical evaporation.
7. Apply SIKA 255 FC adhesive on the grill edge.
8. Install the grill on the vehicle, adjust and fasten with masking tape. Allow 8 hours setting period.

26. RADIATOR DOOR ADJUSTMENT

26.1 DOOR HEIGHT ADJUSTMENT

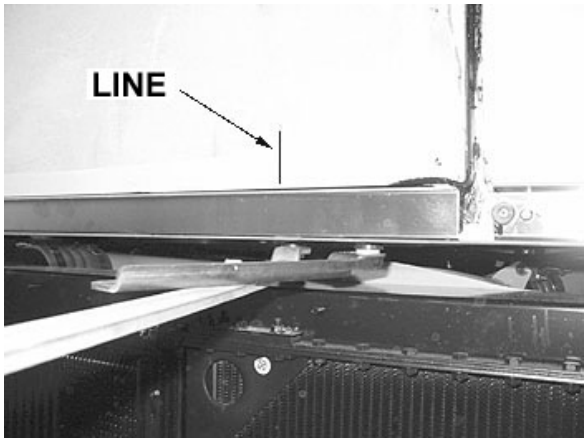

FIGURE 71: REFERENCE LINE

1. Using a pencil, draw a line onto the lateral panel in line with the balance arm.
2. Using a rubber mallet, adjust the lower part of pantograph arm in order to get 4 ± 1 mm between lateral panel and engine door (Refer to figures 64 and 66).

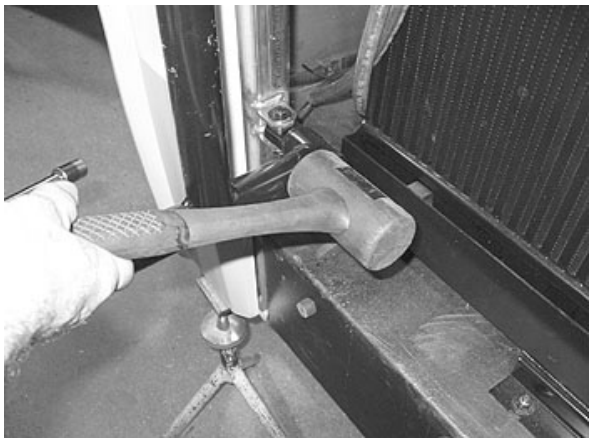

FIGURE 72: PANTOGRAPH ARM ADJUSTMENT

3. Tighten the bolt.

26.2 DOOR LATERAL ADJUSTMENT

FIGURE 73: DOOR LATERAL ADJUSTMENT

1. Using a rubber mallet, adjust radiator door positioning with reference to pantograph arm so that the door is parallel to the lateral panel and to the engine door.
2. Tighten the two bolts.

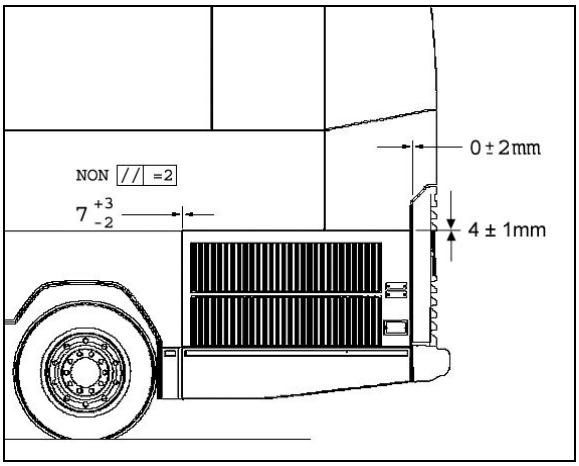

FIGURE 74: PROPER DOOR POSITIONING

26.3 DOOR DEPTH ADJUSTMENT

1. Close radiator door.
2. Check parallelism between radiator door and rear fender (max. 0 ± 2 mm).
3. If the door is too far inside, adjust using a rubber mallet (Refer to figure 68).
4. Tighten the bolt.
5. Close the radiator door in order to verify that latches adjustment is proper. If the gap is too small or too big, adjust latch positioning.

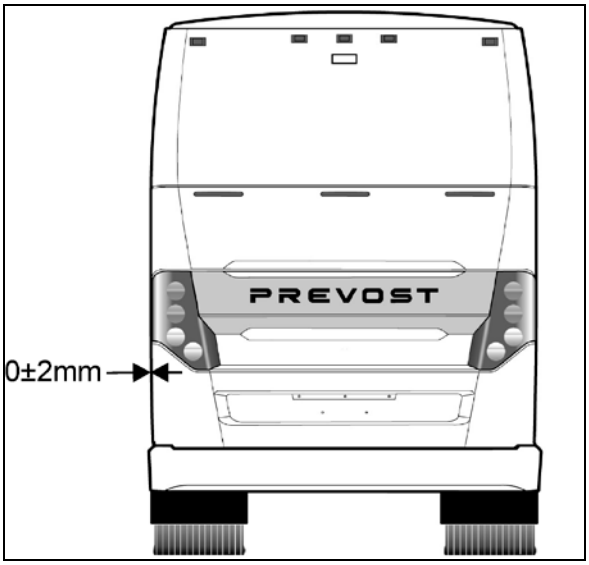

FIGURE 75: DOOR DEPTH ADJUSTMENT

6. Make sure that latch striker pin engages behind the strike plate at least 10 mm. Add or remove spacers if needed. Check door fit and operation. Tighten the latches bolts.

FIGURE 76: DEPTH ADJUSTMENT

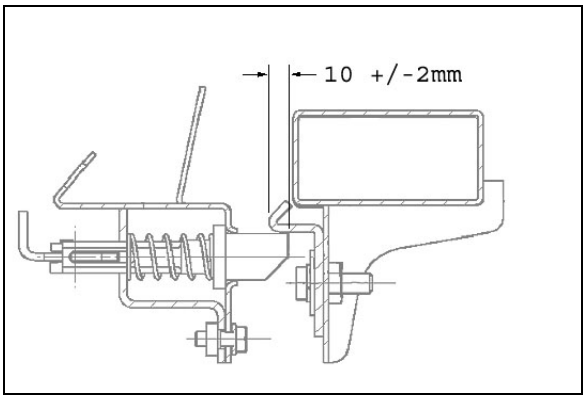

FIGURE 77: DOOR LATCHES ADJUSTMENT

27. CONDENSER DOOR ADJUSTMENT

1. Open the condenser door.
2. Loosen the nuts (1, Figure 78) holding the hinge (3, Figure 78) to hinge attachment (4, Figure 78). Loosening nuts (1, Figure 78) allows the condenser assembly to be shifted "LEFT or RIGHT" and "UP or DOWN".
3. Adjust condenser assembly position at the hinge.
4. Tighten the nuts.

5. Loosen bracket nuts holding the panel to condenser. Panel (6, Figure 78) may be shifted "IN or OUT", "LEFT or RIGHT" and "UP or DOWN".
6. Adjust condenser panel at brackets (2, Figure 78) and (5, Figure 78).
7. Tighten the nuts.
8. Respect the required gap between exterior finishing panels (Figure 60).
9. Check that the door swings freely and closes properly. It may be necessary to adjust the door latch to get proper fit and operation.

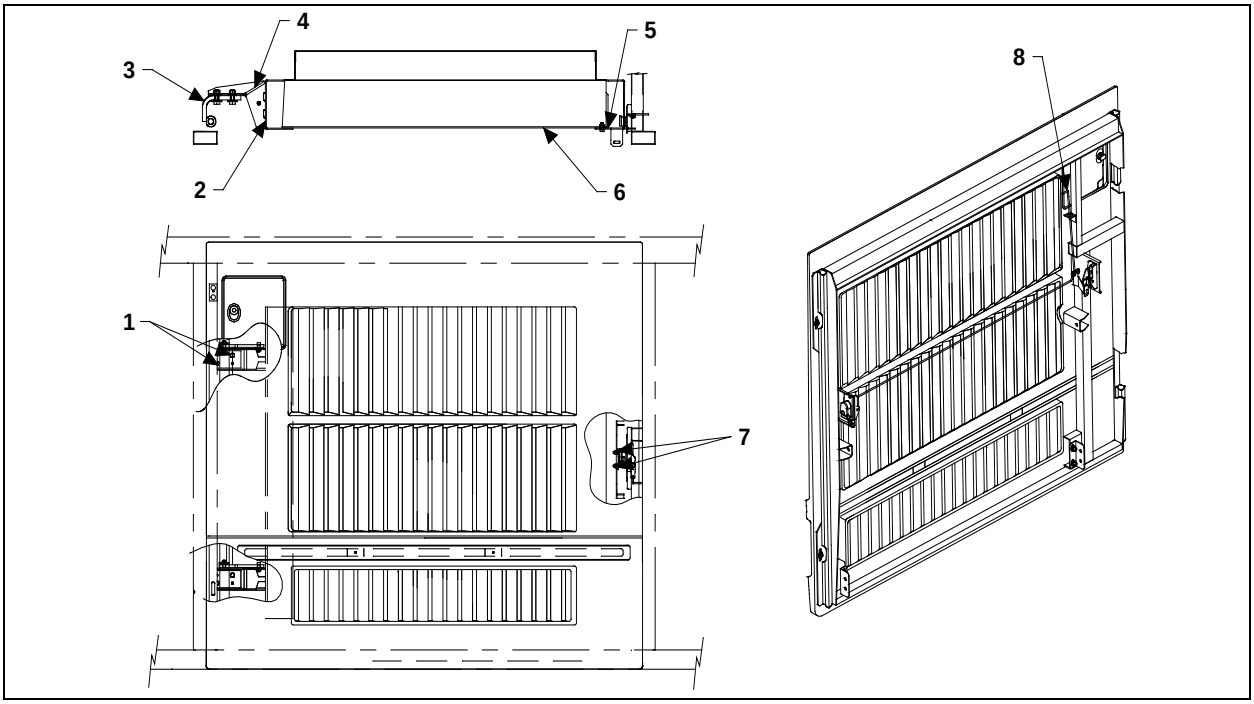

FIGURE 78: CONDENSER DOOR D280201

28. FUEL FILLER DOOR

1. Open the fuel filler door (1, Figure 79).

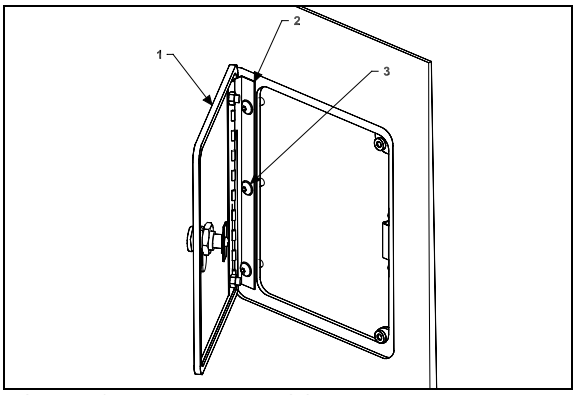

FIGURE 79: FUEL FILLER DOOR 1875003D

2. Loosen the screws (3,Figure 79) holding the panel to hinge (2,Figure 79) assembly.
3. Adjust the fuel filler door position according to distance required between exterior finishing parts (Figure 60).
4. Tighten the nuts.
5. Check that the door swings freely and closes properly.

29. FRONT SERVICE COMPARTMENT

Adjustment of the front service compartment door can be done by following these steps:

1. Open the door.
2. Loosen nut (2, Figure 80).
3. Move part (1, Figure 80), as close as possible to exterior of coach, so as to have enough clearance for proper door opening.
4. Tighten nut (2, Figure 80).
5. Loosen nut (3, Figure 80). Hinge allows the door to be shifted "IN or OUT".
6. Adjust door panel to have the same gap space as neighboring panels or refer to Figure 60for specified gap space. Only if necessary, use the adjustment allowed by moving part 1, Figure 80.

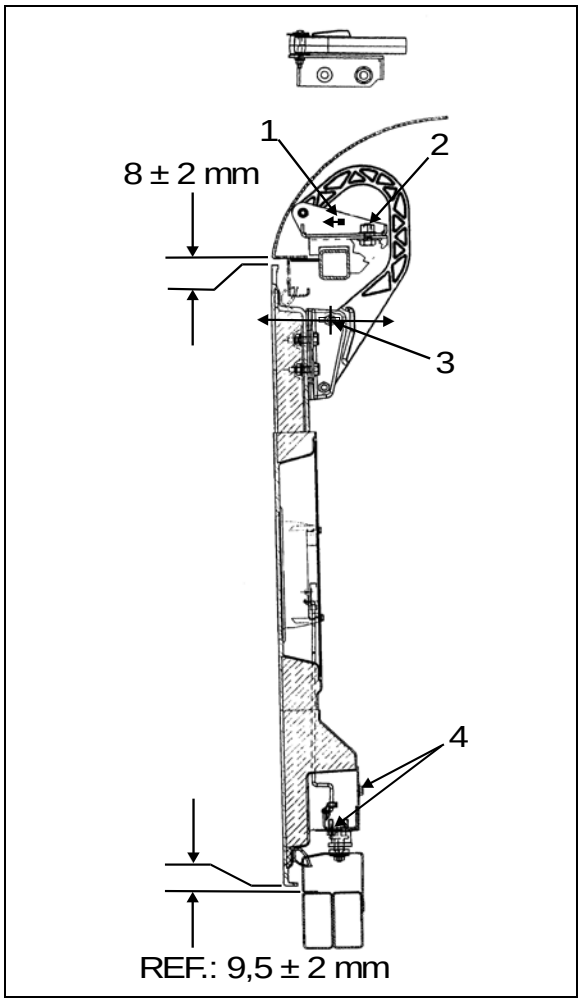

FIGURE 80: DOOR HINGE 18194

7. Loosen screws (5, Figure 81) to allow the door to be shifted "UP or DOWN".
8. Adjust the door position.
9. Tighten the screws.
10. Check that the door swings freely and closes properly. It may be necessary to adjust the door latch to get proper fit and operation.

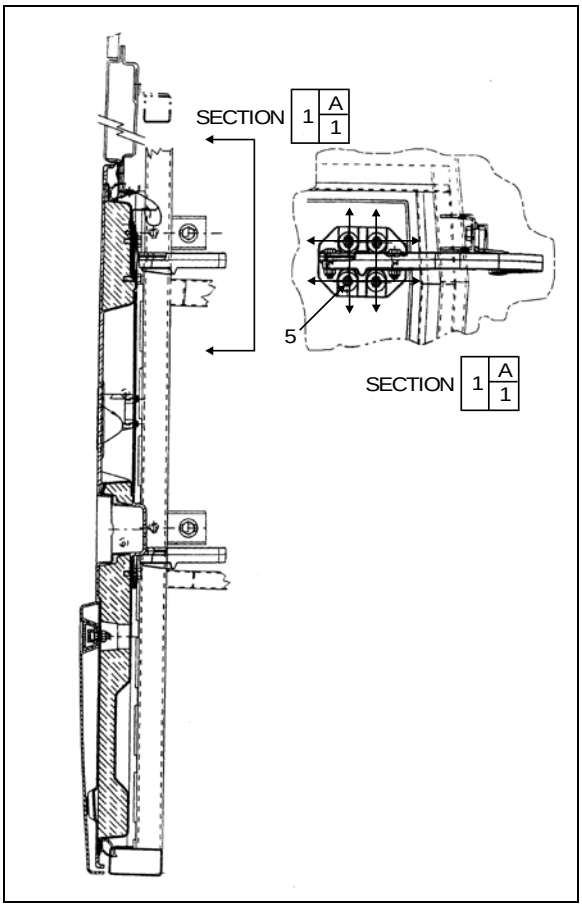

FIGURE 81: FRONT SERVICE DOOR 18195

29.1 LATCH MECHANISM ADJUSTMENT

To adjust the latch mechanism and the striker pin, open the door to access the striker pin. Slightly loosen the striker pin. Using a hammer, adjust the striker pin to center it in the door latch mechanism. Tighten the striker pin. Check door fit and operation.

30. ENGINE COMPARTMENT R.H. SIDE DOOR

The engine compartment R.H side door can be adjusted by following these steps:

1. Open the door.
2. Loosen nut (1, Figure 82).
3. Move part (3, Figure 82) as shown in figure for "LEFT or RIGHT" adjustment.
4. Tighten nut (1, Figure 82).
5. Loosen nut (2, Figure 82).
6. Hinge allows the door to be shifted "IN or OUT".

7. Adjust the door in accordance with the required distance between exterior finishing parts (Figure 60).
8. Loosen screws (4, Figure 83).
9. Screws allow the door to be shifted "UP or DOWN".
10. Adjust the door position according to the distance required between exterior finishing parts (Figure 60).
11. Tighten the screws.

Check that the door swings freely and closes properly. It may be necessary to adjust the door latch to get proper fit and operation.

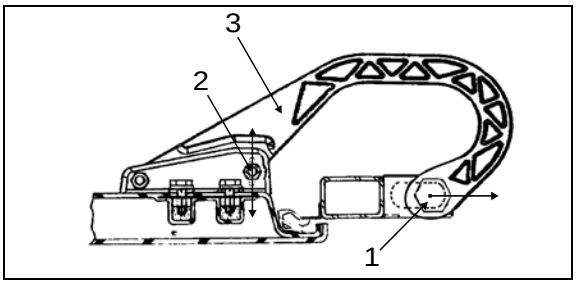

FIGURE 82: DOOR HINGE 18196

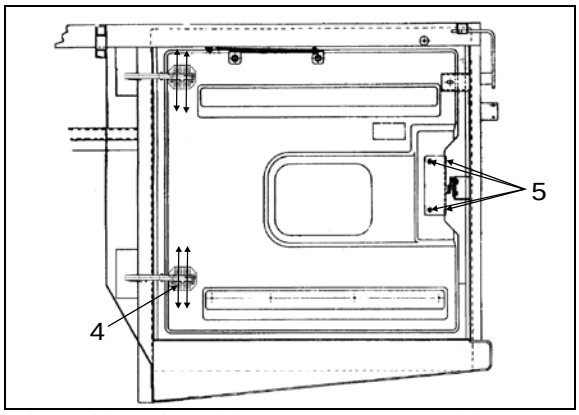

FIGURE 83: ENGINE COMPARTMENT R.H. DOOR 18197

30.1 LATCH MECHANISM ADJUSTMENT

To adjust the latch mechanism and the striker pin, open the door to access the striker pin. Slightly loosen the striker pin. Using a hammer, adjust the striker pin to center it in the door latch mechanism. Tighten the striker pin. Check door fit and operation.

31. EVAPORATOR DOOR ADJUSTMENT

1. Open the door.
2. Loosen nut (1, Figure 84).
3. Move part as shown in figure for "LEFT or RIGHT" adjustment.
4. Tighten nut (1, Figure 84).
5. Loosen nut (2, Figure 84). Hinge allows the door to be shifted "IN or OUT".
6. Adjust the door in accordance with the required distance between exterior finishing parts (Figure 60).
7. Loosen screws (3, Figure 84). Screws allow the door to be shifted "UP or DOWN".
8. Adjust the door position according to the distance required between exterior finishing parts (Figure 60).
9. Tighten the screws.

Check that the door swings freely and closes properly. It may be necessary to adjust the door latch to get proper fit and operation.

31.1 LATCH MECHANISM ADJUSTMENT

1. To adjust the latch mechanism and the striker pin:
2. Open the door to access the striker pin.
3. Loosen slightly the striker pin.
4. Using a hammer, adjust the striker pin to center it in the door latch mechanism.
5. Tighten the striker pin. Check door fit and operation.

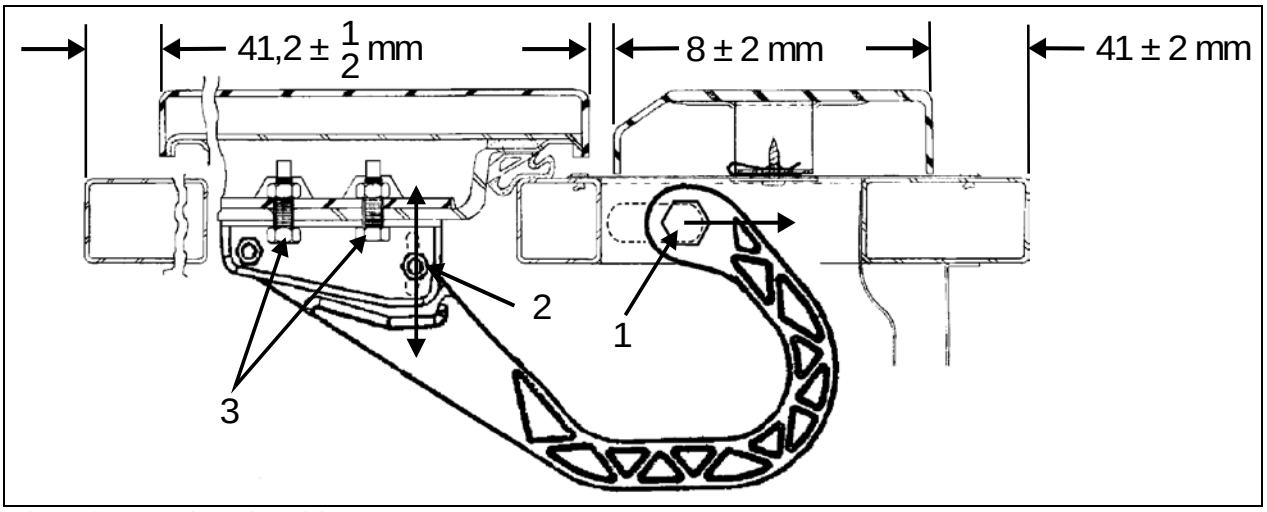

FIGURE 84: EVAPORATOR DOOR 18198

32. MAIN POWER COMPARTMENT

To adjust the main power compartment door:

1. Loosen nut (1, Figure 85).

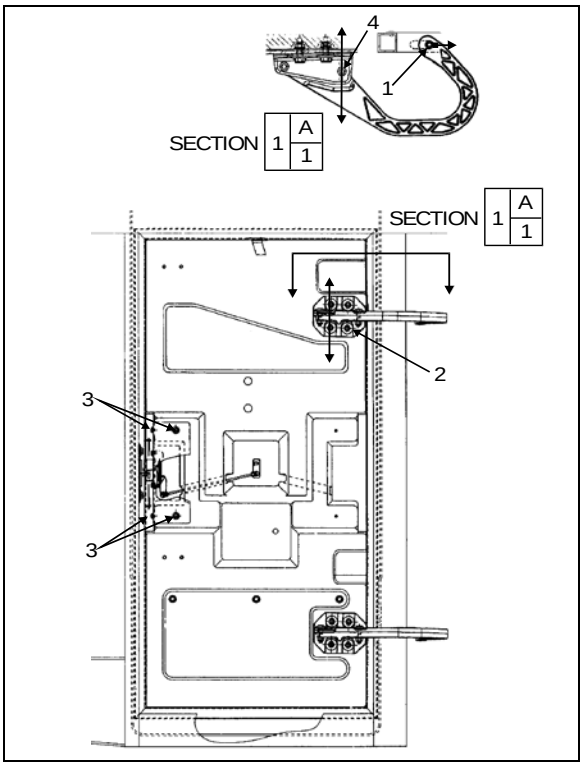

FIGURE 85: MAIN POWER COMP. DOOR 18199

2. Move part as shown in figure for "LEFT or RIGHT" adjustment.
3. Tighten nut (1, Figure 85).
4. Loosen nut (4, Figure 85).
5. Hinge allows the door to be shifted "IN or OUT".
6. Adjust door panel to have the same gap space as neighboring panels or refer to figure 45 for specified gap space
7. Loosen screws (2, Figure 85). Screws allow the door to be shifted "UP or DOWN".
8. Adjust the door position.

Tighten the screws.

Check that the door swings freely and closes properly. It may be necessary to adjust the door latch to get proper fit and operation.

32.1 LATCH MECHANISM ADJUSTMENT

To adjust the latch mechanism and the striker pin:

1. Open the door to access the striker pin.
2. Loosen slightly the striker pin.
3. Using a hammer, adjust the striker pin to center it in the door latch mechanism.
4. Tighten the striker pin.

Check door fit and operation.

33. FENDERS

On the "H" series vehicle, all fenders are easily removable for maintenance on brakes and suspension. Each rear fender has three mechanical spring-loaded holding devices fixing it to the vehicle’s structure.

33.1 REAR FENDER REMOVAL

1. Push the spring type rod sideways so that the lock disengages.

2. Support or have somebody hold the fender up.
3. As in 1, repeat to release both remaining holding devices.
4. Holding the fender firmly, pull it down until the top edge disengages from the holding plates.

To reinstall, reverse the procedure.

33.2 FRONT FENDER REMOVAL

1. At the bottom of fender, remove the retaining screws on one side of the fender.
2. Support or have someone hold the fender up.
3. Remove the screw on the other side of the fender.
4. Pull the fender down until the top edge disengages from the holding plates.

To reinstall, reverse the procedure.

34. REAR CAP

The fiberglass rear cap does not need any maintenance except painting as needed. For minor damages, refer to section 4 "Fiberglass Repair" and section 5 "Painting". If the rear cap ever has to be replaced:

1. Remove all accessories.
2. Drill out the retaining pop rivets.
3. With a sharp edge blade, cut the seal joint and remove the rear cap.
4. With the sharp edge blade, remove as much of the remaining seal pieces as possible.
5. Sand with #120 or #150 sandpaper.
6. Wipe clean with alcohol
7. Prepare surface with SIKA #205 and let dry for a minimum of 2 minutes.
8. Install a new seal using LOCTITE 414 glue.
9. Install the rear cap and fasten with pop rivets.

CAUTION

Do not attempt this procedure unless you are qualified and equipped to handle this job.

35. FRONT CAP

The front cap windshield frame does not need any maintenance. It is held in place with bolts and nuts. If it ever it has to be replaced, make an appointment at a Prevost service center near you.

36. SIDE PANEL INSTALLATION PROCEDURE FOR COACHES AND VIP

Material:

Anti-silicone (682989)	√	Blue cloth (682383)	√	Sika 206 G+P 1 liter (683446)	√
Tack cloth	√	Pure water	√	Sika 252 black	√
CHIX cloth (682384)	√	Scotchbrite gray (680226)	√	Masking tape	√

Equipment:

Glue gun	√	
Compression roller	√	

SECTION #1 SIDE PANEL INSTALLATION

1.00	**SS Body structure preparation**		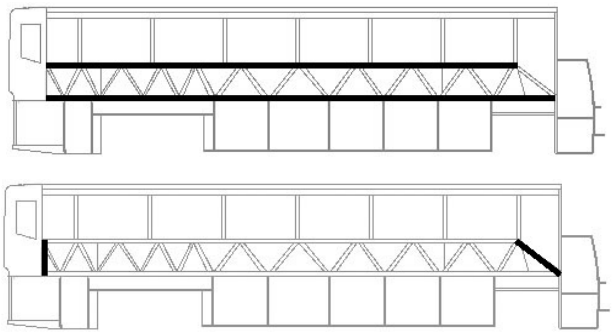
	A)	Clean using anti-silicone. See SAV000001 section A. Use Scotchbrite to sand structure. Use 1 side of Scotchbrite for 1 side of vehicle.	

SAV000001 Section A Alcohol or Anti-silicone

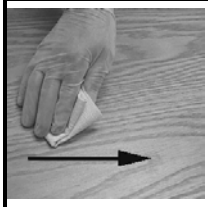

***1.* Apply**

CHIX cloth

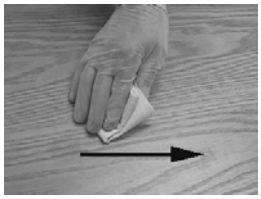

***2.* Dry immediately**

Blue cloth

***3.* Allow to dry**

Mandatory	**Minimum time : Wait for product to evaporate**
	After 2 hours: Start cleaning operation again
Before applying any other product	If surface seems dusty, greasy or with finger marks, start cleaning operation again.

1.05	**Fiberglass panel preparation (fiber side)**	

	A)	Clean using tack cloth. Repeat if surface seems dusty.	
	B)	Clean using anti-silicone See SAV000001 section A.	
	C)	Apply primer 206 G+P. See SAV000001 section D.	

PR000001 Section D Sika Primer 206 G+P

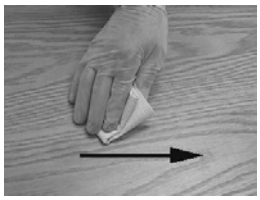

3. **Shake bottle to mix product**

4. **Apply a thin layer**

CHIX cloth

3. **Allow to dry**

Mandatory	**206 G+P**	**Minimum time : 10 minutes**
		After 2 hours: Remove dust using damp cloth (pure water)
		After 8 days : Reactivate with Aktivator as per section "C"
Before applying any other product		If surface seems dusty, dust using damp cloth.
		If surface seems greasy or with finger marks, reactivate with Aktivator.

1.10		**SS Body structure preparation**	
	A)	Clean using anti-silicone. Clean structure at least twice. Repeat is necessary until cloth comes clean. See SAV000001 section A.	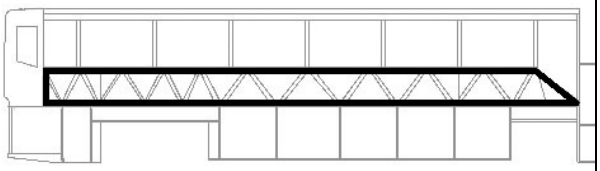
	B)	Apply 1 ¼" protective tape along bottom structural tubing.	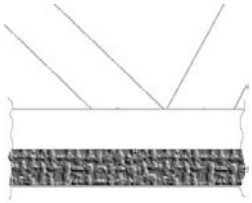

	C)	Apply 206 G+P onto structure. See SAV000001 section D.	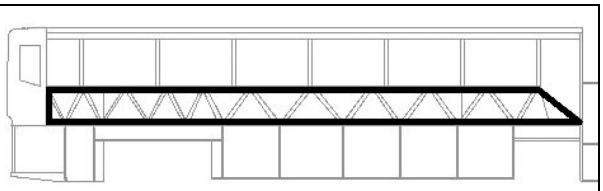
1.15		Seal entrance door perimeter using Sika 252 black, Smooth down the excess.	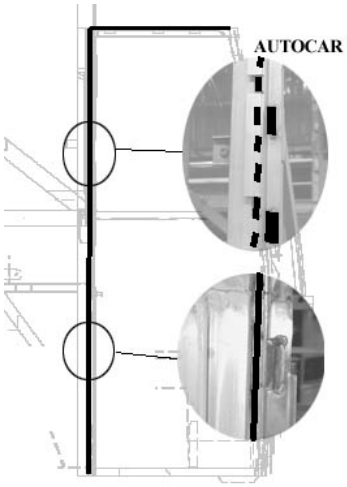
1.20		Install lateral panel supports onto bottom structural tubing. Install lateral panel onto supports to verify proper positioning.	
1.25	**Glue application**		
	A)	Set (timer) or record time. ***No more than 45 minutes should elapse between beginning of glue application and panel installation.***	
	B)	Apply Sika 252 black onto structure 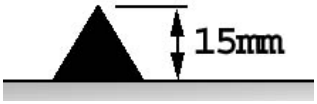	
1.30 *	A)	Install lateral panel onto supports and clamp panel in place using "C" clamps and square tubing to even out the pressure. **Note: A maximum of clamps should be used (every 6 inches) to ensure proper bonding. Do not tighten too much.**	

	B)	At the rear, adjust panel height so that it is level with rear cap	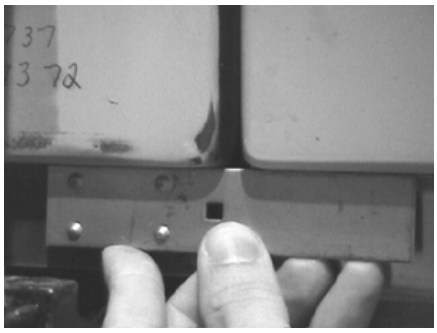
	C)	Gap between lateral panel and rear cap must be 6mm +4/-3 and panels must be aligned within 1.5mm.	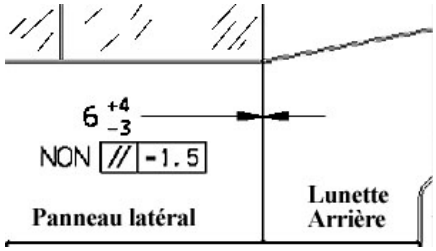
	D)	Using a ruler, adjust front of lateral panel.	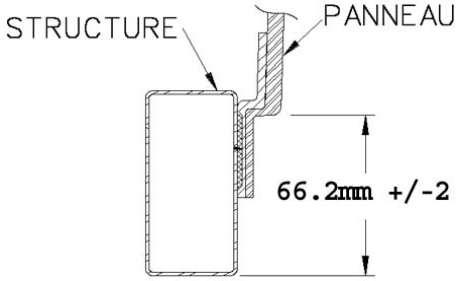
	E)	Verify if panel upper corner is in the middle of window post.	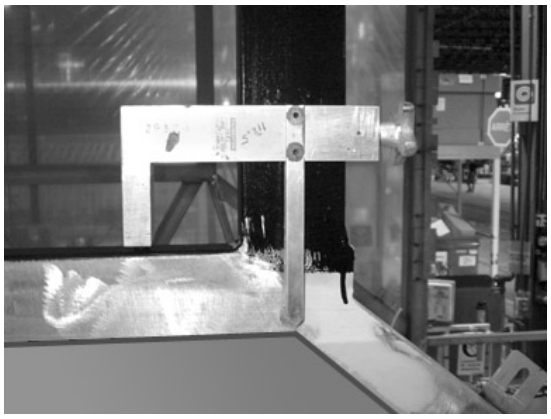
1.55	Remove excess of glue using a spatula. Apply a bead of Sika 252 at the top of panel Spray pure water onto all the joints to speed up drying process		
1.60	Remove protective tape (installed at step 1.10b).		

1.70	**Do not move the vehicle for 48 hours** **Make sure room temperature is superior to 20°C (68°F) before gluing** **Perform a visual inspection before installing side windows**

SECTION #2 DRIP MOLDING INSTALLATION			
2.00 *	A)	Clean using Anti-silicone See SAV000001 section A.	
	B)	Apply Sika 206 G+P See SAV000001 section D.	
2.05		Remove blue paper from drip molding. Remove protective tape from double-face self adhesive tape	
2.10		Glue drip molding. Allow a gap of 1mm minimum between top of drip molding and panel.	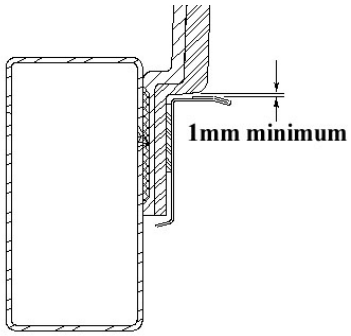
2.15		Compress drip molding using the compression roller to increase adherence.	
2.20		Round off rear and front drip molding corners.	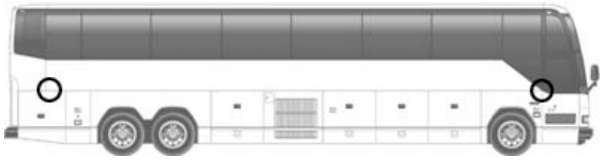

SECTION #3 REPAIR		
4.00	Remove fiberglass from structure using a screwdriver. Use wedges if necessary to hold down panel during the work.	
4.05	Remove as much glue as possible. If primer is removed, apply primer 206 G+P locally. If primer is OK, reactivate as per SAV000001 section D.	
4.10	Apply Ultrafast 2 glue (heated).	
4.15	Compress panel using clamps and a metal flat bar (for an even compression). Only use screws as a last resort to compress.	
4.20	**Vehicle must not move for the next 12 hours.**	

37. REAR VIEW MIRRORS (RAMCO)

Your vehicle is equipped with two exterior mirrors.

The mirrors may be equipped with an optional electric heating system which serves to minimize ice and condensation on the mirror glass in extreme weather conditions. Integral thermostats are installed in both mirrors to avoid continuous heating. Use the appropriate switch on the dashboard to activate the defroster system on both mirrors simultaneously. The mirrors can easily be adjusted by using the remote controls located on the L.H. side control panel. The mirrors have easy to replace glass in case of breakage. Remote control motors can also be replaced.

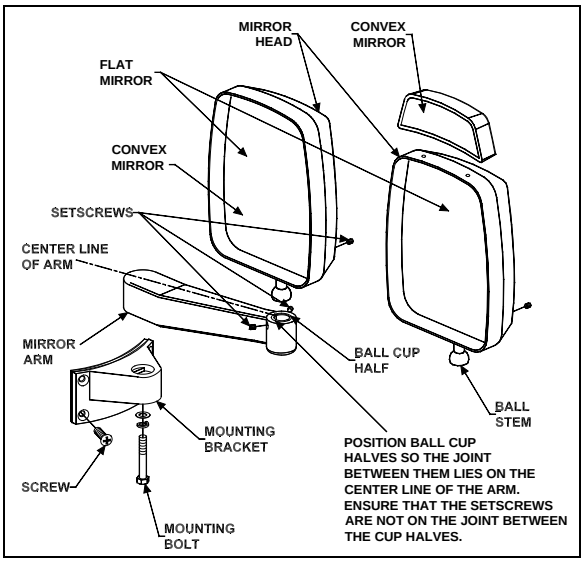

FIGURE 86: REAR-VIEW MIRROR (RAMCO) 18201

37.1 ADJUSTMENT

At the base of the mirror arm, loosen the mounting bolt to swing arm in or out.

To pivot the mirror head, loosen the setscrews on each side of the ball stub at the base of the mirror head to facilitate the adjustment.

37.2 DISASSEMBLY

At end of mirror arm, loosen the setscrews to relieve tension on the ball stem. Remove the ball stem from the arm.

Remove the four screws fastening the mirror arm base to the coach.

37.3 ASSEMBLY

Mount the mirror arm base to the coach.

Insert the ball stem into the mirror arm and tighten the socket setscrews.

NOTE
Position the ball cup halves so the joint between them lies on the centerline of the arm. Ensure that the setscrews are not on the joint between the cup halves.

37.4 REPLACEMENT OF MIRROR GLASS

Remove the broken glass.

Position new glass in mirror head and press to lock the Velcro in place.

37.5 HEATED / REMOTE CONTROLLED REAR VIEW MIRRORS

Heated/remote controlled external rear view mirrors may be provided to prevent the mirrors from frosting up in cold weather.

The remote controlled external rear view mirrors attach to support arms using a pivot collar secured by setscrews. Loosening the setscrews allows the whole head assembly to turn on the support arm for initial adjustment. A mounting bolt and washer hold the arm support to the mounting bracket. The arm support can be moved to position the mirror head into or away from the coach body.

The mirror heat switch is located to the left of the driver on the dashboard. This switch must be activated before the mirror heating element will energize. Once energized, the mirror heating element is kept at a sustained temperature (between 60-80°F) by a thermostat. Refer to wiring diagram annexed in the technical publication box.

CAUTION

Do not attach stick-on type convex mirror accessories to the heated mirror glass. This could impede uniform heat distribution on the mirror surface which could break the mirror.

37.5.1 Mirror Control

The remote control pointer knob(s) for the mirrors is (are) mounted on the L.H. side control panel. The harness to the mirror head runs through the arm support. The remote motor is mounted to the mirror head behind the mirror glass.

Turn pointer knob to the left for mirror head adjustments and to the right for convex mirror adjustment, then push down on either of the button's (4) sides to adjust the selected mirror viewing angle.

37.5.2 Disassembly

At end of mirror arm, loosen the setscrews to relieve tension on the ball stud. Remove the ball stud. Remove the ball stud from the arm and gently pull the harness out until the connector is exposed.

Remove the four screws fastening the mirror arm base to the coach. Slide the harness free of the mirror arm base.

37.5.3 Assembly

Attach a stiff wire (snake) to the end of the harness and insert the wire through the mirror arm base and arm, gently pull the harness through the arm and disconnect the "snake".

Connect the mirror head harness. Insert the harness connector back into the mirror arm.

Insert the ball stud into the mirror arm and tighten the socket setscrews.

NOTE

Position the ball cup halves so the joint between them lies on the centerline of the arm. Ensure that the setscrews are not on the joint between the cup halves

37.5.4 Convex & Flat Mirror Removal

The mirror glass assembly is mounted to the control mechanism or to mirror base with Velcro strips. Remove the mirror glass by gently pulling the lens to release the Velcro. Disconnect the heater grid at the two connectors.

Connect the connectors of the new mirror's grid to the harness. Install the lens by positioning the lens in the mirror frame and pressing to lock the Velcro in place.

SPECIFICATIONS

Door cylinder

Manufacturer ..... Bimba
Type ..... Pneumatic
I.D. ..... 1½" (mm)
Stroke ..... 8" (mm)
Prevost number 780595

Damper

Manufacturer ..... Koni
Prevost number 780565

Lock cylinder (upper)

Manufacturer ..... Bimba
Type ..... Air, single action, 1/8 NPT, hexagonal rod
I.D. ..... 7/8" (22 mm)
Stroke ..... 1" (25 mm)
Prevost number 641392

Lock cylinder (central)

Manufacturer ..... Bimba
Type ..... Air, single action, ¼ NPT
I.D. ..... 1¾" (45 mm)
Stroke ..... 1" (25 mm)
Prevost number 641209

Manifold solenoid

Manufacturer ..... Norgren
Type ..... 4 ports, 1/8 NPT
Voltage ..... 24 VDC
Power consumption ..... 6 watts
Maximum pressure ..... 150 psi (1035 kPa)
Prevost number 641448

Solenoid valve (Latching valve)

Manufacturer ..... Humphrey
Model 310
Operating range ..... 0 to 125 psi (0 to 860 kPa)
Voltage ..... 24 VDC
Voltage tolerance ..... +10%, -15% of rated voltage
Power consumption ..... 4 watts
Leak rate (max allowed) ..... 0.245 in3/min @ 100 psi (4cc/min @ 690 kPa)
Type of operation ..... Direct solenoid
Lubrication ..... Not required (factory pre-lubed)
Filtration ..... 40 micron recommended
Prevost number 641412

Pressure switch assembly

Prevost number 452831

MAINTENANCE INFORMATION

MI15-18

DATE :	MAY 2015	SECTION : 18 - Body
SUBJECT :	**STRUCTURE INSPECTION FOR CORROSION - HOW TO PREVENT CORROSION**	

IMPORTANT NOTICE
This maintenance is recommended by Prevost to increase your vehicle's performance. Note that no reimbursement will be awarded for carrying out this maintenance.

APPLICATION

Model	VIN
All Prevost models	

DESCRIPTION

This procedure was made in order to support Prevost customers who are worried about their vehicle structure behavior due to corrosion.

Five year old vehicles and older should be subjected to a thorough structural inspection; especially if clear signs of moderate or deep corrosion are visible. The inspection can be conducted as described in the following procedure.

In this procedure, you will find information about:

1) The important areas that should be inspected

2) When a structural inspection should be carried out

3) How to perform the inspection

4) What can be done to optimize corrosion protection during your vehicle's life

STRUCTURE INSPECTION – CORROSION	
DESCRIPTION	**INTERVAL**
Perform structural inspection for corrosion as described in this document	**Normal duty cycle vehicles and normal environment operation** Every 5 years starting from the 5th year in service
	Severe duty cycle vehicles and harsh environment operation Every 2 years starting from the 5th year in service
	Whenever a *visual inspection* discloses that corrosion seems to have caused damages to the structure such as perforation, flaking, separation of metal layers, loss of material, etc.

CAUTION

Reject member, chassis component, axle, etc. if:

Cracked, broken, separated by corrosion or corroded to a depth as to weaken member so as to affect the safety and structural integrity of the vehicle.

DANGER

Park vehicle safely, apply parking brake, stop engine. Prior to working on the vehicle, set the ignition switch to the OFF position and trip the main circuit breakers equipped with a trip button. On Commuter type vehicles, set the battery master switch (master cut-out) to the OFF position.

THE IMPORTANT AREAS THAT SHOULD BE INSPECTED

Front & rear sub-frames, drive axle cradle and tag axle (FIGURE 1) on Prevost structures are made of high strength steel. Although the structure on a Prevost vehicle receives a beneficial corrosion preventive compound application at the end of the manufacturing process, after many years of service with exposure to harsh environments (winter, frequent rains, road salt, stone projection, sand accumulation, etc.), the carbon steel can be subject to severe corrosion. The use of high strength steel remains a requirement to withstand peak loads.

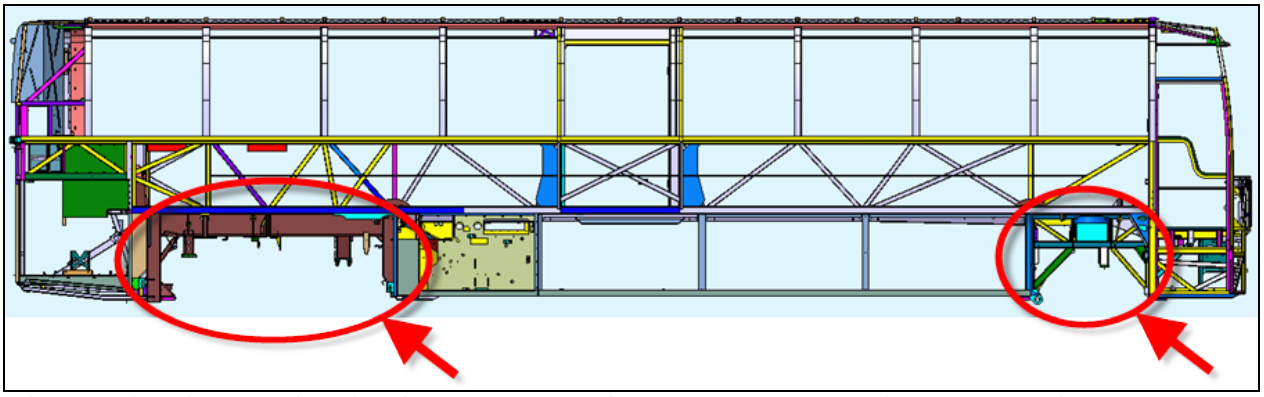

FIGURE 1 – CRITICAL AREAS: FRONT SUB-FRAME, REAR SUB-FRAME, DRIVE AXLE CRADLE AND TAG AXLE

WHEN SHOULD A STRUCTURE INSPECTION BE CARRIED OUT?

Vehicles operating in harsh environments without an appropriate corrosion protection compound applied to the front and rear sub-frames, drive axle cradle and tag axle could be subject to corrosion. If parts of the tag axle or front and rear sub-frames structures present metal flaking, separation of metal layers, loss of material, perforation, etc. then they should be inspected in order to confirm that the minimum wall thickness remains (FIGURE 2 to FIGURE 5).

FIGURE 2: METAL FLAKING. ACCUMULATED SAND AS SHOWN ON THE IMAGE SHOULD NOT BE LEFT IN PLACE

FIGURE 3: METAL FLAKING AND ACCUMULATED SAND

FIGURE 4: METAL FLAKING ON TAG AXLE - ACCUMULATED MATTER WILL RETAIN WATER THUS CREATING CONDITIONS PROMOTING ADDITIONAL CORROSION

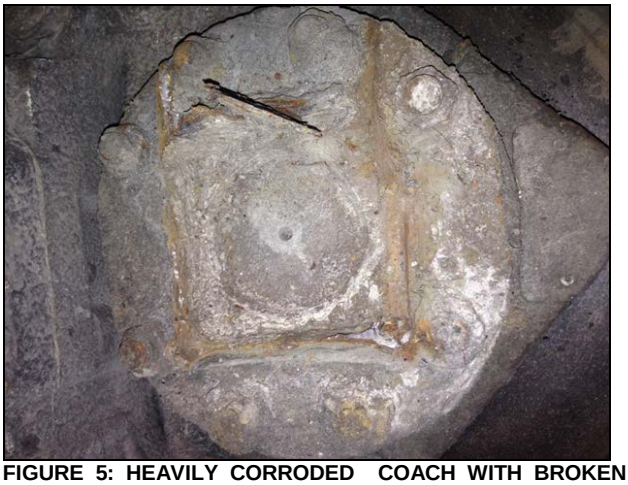

FIGURE 5: HEAVILY CORRODED COACH WITH BROKEN TAG AXLE. THIS IMAGE SHOWS THE SPINDLE MOUNTING PLATE SEPARATED FROM THE REST OF THE TAG AXLE

STRUCTURE INSPECTION PROCEDURE

The thickness of main carbon steel parts on rear & front sub-frames, drive axle cradle and tag axle beam must be **at least 1/8 inch (0.125") (3mm)**. There are two options to properly monitor the wall thicknesses:

1- Using an ultrasonic wall thickness gauge.

2- Drilling holes and measuring wall thickness.

1- Structural Inspection Procedure Using Ultrasonic Wall Thickness Gauge

The ultrasonic wall thickness gauge has to be used on bare metal. The surface where the gauge will be put on has to be cleaned of rust, paint or other material. If the thickness is more than 1/8 inch (3mm), repaint the cleaned surface to prevent corrosion from occurring on this spot.

Use a grinder or another tool to remove rust or paint on the spot to check. The gauge has to be placed on the center of the cleaned spot. The gauge has to be perpendicular to the surface to get an accurate measure.

Inspection using ultrasonic wall thickness gauge is recommended over drilling holes because it minimize risk of altering the vehicle structure.

FIGURE 6: CLEANED SPOT ON STRUCTURAL MEMBER

2- Structural Inspection Procedure Using Drilled Holes

Drill a ¼ inch (6 mm) diameter hole in the most corroded wall of the part being checked. Use a caliper to measure the thickness of the drilled metal. Wall thickness should be at least 1/8 inch (0.125") (3mm). Drilled hole must then be welded (filled with metal) and repainted after measurement to prevent water infiltration and corrosion from occurring around the hole.

Clean/remove flaking rust on frame. Drill hole in the most corroded wall. The hole must be welded after to prevent corrosion and water infiltration. Filled hole must be painted to prevent corrosion.

CAUTION

Holes and welding can increase the risk of crack initiation. **Ultrasonic wall thickness gauge method is recommended.**

FIGURE 7: HOLE DRILLED IN STRUCTURAL MEMBER

CORROSION PROTECTION ON OLD AND CORRODED FRAME

To maximize corrosion resistance on older frame exposed to harsh environment:

1) Clean rust on frame. If available, use sand blasting.

2) Apply a zinc-rich primer on cleaned surfaces.

3) Cover carbon steel parts with corrosion preventive compound Tectyl 185GW.

CAUTION
Avoid primer, paint, and corrosion preventive compounds on pneumatic valves and rubber bushings.

FIGURE 8: CLEAN RUST

PROTECTION TO PREVENT CORROSION

Tectyl 185GW should be used to prevent corrosion propagation on frame.

1) Clean rust and dirt on the frame.

2) Apply Tectyl following the manufacturer's recommendation.

3) Apply Tectyl every year or as needed.

CAUTION
Avoid primer, paint, and corrosion preventive compounds on pneumatic valves and rubber bushings.

For more details on Tectyl 185GW, see QC Lubricants web site:

http://www.qclubricants.com/TECTYL185GWBlack.htm

FIGURE 9: TECTYL 185GW BLACK APPLICATION

Tectyl 185GW Black

QC Lubricants carries Tectyl 185GW Black in pails and drums.

TECTYL® 185GW Black is a solvent cutback, thixotropic corrosion preventive compound. The dry film is semi-firm and has a semi-gloss appearance. TECTYL® 185GW Black provides outstanding protection in marine, tropical, and industrial environments, and is widely used for transportation equipment. TECTYL® 185GW Black possesses dielectric strength of 800 volts per dry mil of coating. TECTYL® 185GW Black provides galvanic corrosion protection and can be applied on battery terminals for insulating purposes.

PARTS / WASTE DISPOSAL

Discard according to applicable environmental regulations (Municipal/State[Prov.]/ Federal)

Access all our Service Bulletins on https://secureus5.volvo.com/technicalpublications/en/pub.asp
Or scan the QR-Code with your smart phone.

*E-mail us at **technicalpublications_prev@volvo.com** and type "ADD" in the subject to receive our warranty bulletins by e-mail.*

MAINTENANCE INFORMATION

MI15-41

DATE : AUGUST 2015	SECTION : 18 - Body
SUBJECT : CRACKING OF POLYCARBONATE TAILLIGHTS CAUSED BY INAPPROPRIATE CLEANING PRODUCTS	

APPLICATION

Model	VIN
ALL MODELS	

DESCRIPTION

Prevost would like to remind its customers that only **cleaning products designed for external washing of vehicles** should be used for exterior vehicle wash and in particular, for the washing of polycarbonate taillights.

POLYCARBONATE CRACKING

Degreasers designed to clean motors **must not be used** to clean the engine compartment door. These products are not compatible with polycarbonate. They cause cracking of the polycarbonate taillights housing and cracking of the bosses in which the mounting threaded rods are inserted (figures 2 & 3).

CLEANING PRODUCT COMPATIBLE WITH POLYCARBONATE

Cleaning products designed for external washing of vehicles shall be used to clean your vehicle. Prevost suggests a high PH cleaner compatible with polycarbonate. See the description of the product in the following table

Part No	Description	Qty
686037	EXTERIOR CLEANER (BODY)	1 gallon / 4 liters
686036	EXTERIOR CLEANER (BODY)	5.28 gallons / 20 liters
685841	EXTERIOR CLEANER (BODY)	55 gallons / 210 liters

NOTE
Material can be obtained through regular channels.

High PH cleaning product compatible with polycarbonate - product sheet

Traffic film remover

Will not make plastics crack

Perfect for trucks, cars, trains, buses and machinery. Safe for all types of plastics including polycarbonate. Designed for automatic or pressure washing.

ADVANTAGES

- Easily removes traffic film, insects and grease.
- Safe for car and truck paint.
- Safe for use on metal, rubber, chrome, glass and plastic surfaces.
- Does not leave any deposit.
- Concentrated.
- Eco-friendly.
- Easy to rinse.
- Dries evenly.

DIRECTIONS

Pressure washing :

1. Use product accordingly to dilution ratio.
2. Spray evenly on vehicle surface starting by the bottom.
3. Rinse thoroughly with cold or lukewarm water.

MORE DETAILS

Do not wash in direct sunlight. Do not allow product to dry on surface.

DILUTION RATIO

DIRT	RATIO
Mild	1 oz / 20 oz 50 ml / L
Average	1 oz / 10 oz 100 ml / L
Strong	1 oz / 6.67 oz 150 ml / L

PRECAUTIONS

Avoid all contact with eyes.
Avoid all contact with skin.
Wash hands with soap and water after handling.

FIRST AID

- Skin: Wash contaminated skin with soap and water.
- Eyes: Flush immediately with running water for at least 15 minutes, occasionally lifting the upper and lower eyelids. Seek medical help.
- Ingestion: Do not induce vomiting. If the person is conscious, have them drink several glasses of water or milk. Seek medical help.

PHYSICAL ATTIBUTE

PHYSICAL STATE:	Liquid
APPEARANCE:	Clear
COLOR:	Transparent
SCENT:	Chemical
PH:	13.1
DENSITY (25°C):	1.1

SECURITY

HEALTH	1
FLAMMABILITY	0
REACTIVITY	0
PERSONAL ROTECTION	B

0 =	NEGLIGIBLE
1 =	LOW
2 =	MODERATE
3 =	HIGHT
4 =	EXTREME

FIGURE 1: PRODUCT SHEET

IMAGES SHOWING THE CRACKING ISSUE

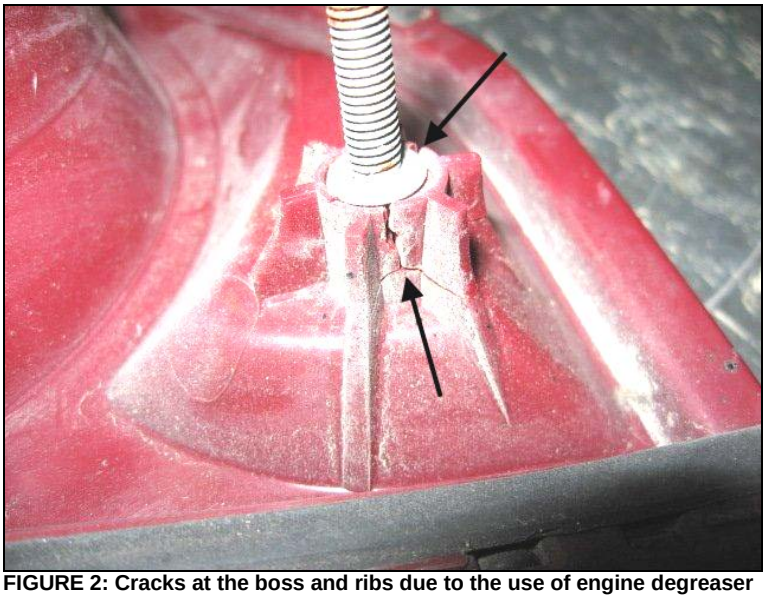

FIGURE 2: Cracks at the boss and ribs due to the use of engine degreaser

FIGURE 3: Cracking of the outer surface of the taillight due to the use of engine degreaser

Access all our Service Bulletins on https://secureus5.volvo.com/technicalpublications/en/pub.asp
Or scan the QR-Code with your smart phone.

*E-mail us at **technicalpublications_prev@volvo.com** and type "ADD" in the subject to receive our warranty bulletins by e-mail.*

CONTENTS

1 TORQUE TABLES 5

2 VEHICLE EXTERIOR 7

3 VEHICLE JACKING POINTS 10

3.1 HYDRAULIC JACK 11

4 TOWING THE VEHICLE 11

4.1 LIFTING AND TOWING 12
4.2 TOWING WITHOUT LIFTING 12
4.3 VOLVO I-SHIFT ALTERNATE TOWING MODE 13

5 VEHICLE STRUCTURE 14

6 VEHICLE EXTERIOR MAINTENANCE 14

6.1 CORROSION PREVENTION 14
6.2 PREVENTIVE MAINTENANCE SCHEDULE 15
6.3 RUST INHIBITOR APPLICATION 16

7 COMMON FIBERGLASS REPAIR PROCEDURE 21

7.1 REPAIR USING FIBERGLASS CLOTH 21
7.2 REPAIR USING FIBERGLASS PASTE 21
7.3 TYPICAL FIBERGLASS REPAIR PROCEDURE 22

8 COMMON PAINTING PROCEDURE 23

8.1 NEW PAINT CARE 23
8.2 PAINT TOUCHUP 23
8.3 PAINTING 24
8.3.1 Safety 24
8.3.2 Surface Preparation and Paint Application 24

9 X3-45 COACHES EXTERIOR FINISHING AND BODY REPAIR 25

9.1 ZONE 1 25
9.1.1 Front Bumper 26
9.1.2 Front Crest 26
9.1.3 Headlights 27
9.1.4 Rear View Mirrors (Ramco) 27
9.1.5 Windshield Wipers 28
9.1.6 Windshield 28
9.1.7 Entrance Door 29
9.1.8 Front Electrical & Service Compartment Door Body Panel and Window 38
9.1.9 Front Cap 43
9.2 ZONE 2 44
9.2.1 Lateral Fixed Window 44
9.2.2 Emergency Exit Windows 45
9.2.3 Roof Escape Hatch 46
9.3 ZONE 3 48
9.3.1 Rear Cap 49
9.3.2 Rear Bumper 50

9.3.3 Exhaust Aftertreatment System Access Door 50
9.4 ZONE 4 50
9.4.1 Rear Fender 51
9.4.2 Engine R. H. Side Access Door 51
9.4.3 Engine Radiator Door 55
9.5 ZONE 5 57
9.5.1 Baggage Compartment Doors (Aluminum) 58
9.5.2 Wheelchair Lift Cassette Compartment Door 60
9.5.3 Wheelchair Lift access door installation 62
9.5.4 Baggage Compartment Floor 65
9.5.5 Evaporator Compartment Door 70
9.5.6 Condenser Compartment Door 72
9.5.7 Fuel Filler Door 73
9.6 ZONE 6 74
9.6.1 Front Fender 74
9.7 ZONE 7 75
9.7.1 X3 Smooth Side Panel Replacement Procedure 75
9.7.2 Side Crest 83
9.8 BODY PANEL AND WINDOW SPACING 84
9.9 PASSENGER SEATS 85
9.9.1 Rotating Seats 85
9.9.2 Removing Fixed Seats 85
9.9.3 Upholstery Maintenance 86
9.10 TARABUS FLOOR COVERING REPAIR OR REPLACEMENT 87
9.10.1 Front Steps Replacement Procedure 89
9.10.2 Welding Of Joint Between White Safety Strip And "Tarabus" Floor Covering 92
9.10.3 Repair Of A Welded Joint 95

10 X3-45 VIP EXTERIOR FINISHING AND BODY REPAIR 96

10.1 ZONE 1 97
10.1.1 Front Bumper 98
10.1.2 Front Crest 98
10.1.3 Headlights 99
10.1.4 Rear View Mirrors 99
10.1.5 Windshield Wipers 100
10.1.6 Windshield 100
10.1.7 Front face Body Panel 102
10.1.8 Entrance Door 102
10.1.9 Front Electrical & Service Compartment Door 103
10.1.10 Upper Lateral Window 103
10.1.11 Front Cap 103
10.2 ZONE 2 105
10.2.1 Upper Side Panel 105
10.2.2 Fixed Windows 105
10.2.3 Electric Awning Windows 106
10.2.4 Electric Sliding Windows 109
10.3 ZONE 3 112
10.3.1 Rear Cap 112
10.3.2 Engine Compartment Doors 113
10.3.3 Rear Bumper 114
10.4 ZONE 4 115
10.4.1 Rear Fender 115
10.4.2 Engine R. H. Side Access Door 115

10.4.3 Engine Radiator Door 120
10.5 ZONE 5 122
10.5.1 Pantograph Baggage Compartment Doors (Aluminum) 122
10.5.2 Hinged Baggage Compartment Doors (Aluminum) 125
10.5.3 Condenser Compartment Door 127
10.5.4 Evaporator Compartment Door (Aluminum) 128
10.5.5 Fuel Filler Door 130
10.6 ZONE 6 131
10.6.1 Front Fender 131
10.7 ZONE 7 132
10.7.1 Side Panel for Vehicles Not Fitted With Slide-Out 132
10.7.2 Side Panel for Vehicles Fitted With Slide-Out 133
10.7.3 Side Crest 133
10.8 ZONE 8 134
10.8.1 Slide-Out Exterior Finishing Panels & Windows 134
10.9 ZONE 9 135
10.9.1 Slide-Out Exterior Finishing Panels & Windows 135
10.10 BODY PANEL AND WINDOW SPACING FOR X3-45 VIP NOT FITTED WITH SLIDE-OUT 136
10.11 BODY PANEL AND WINDOW SPACING FOR X3-45 VIP WITH FRONT AND REAR SLIDE-OUT 137
10.12 BODY PANEL AND WINDOW SPACING FOR X3-45 VIP FITTED WITH FRONT SLIDE-OUT 138

11 SPECIFICATIONS 139

SECTION CHANGE LOG

	DESCRIPTION	DATE
1		
2		
3		
4		
5		
6		

1 TORQUE TABLES

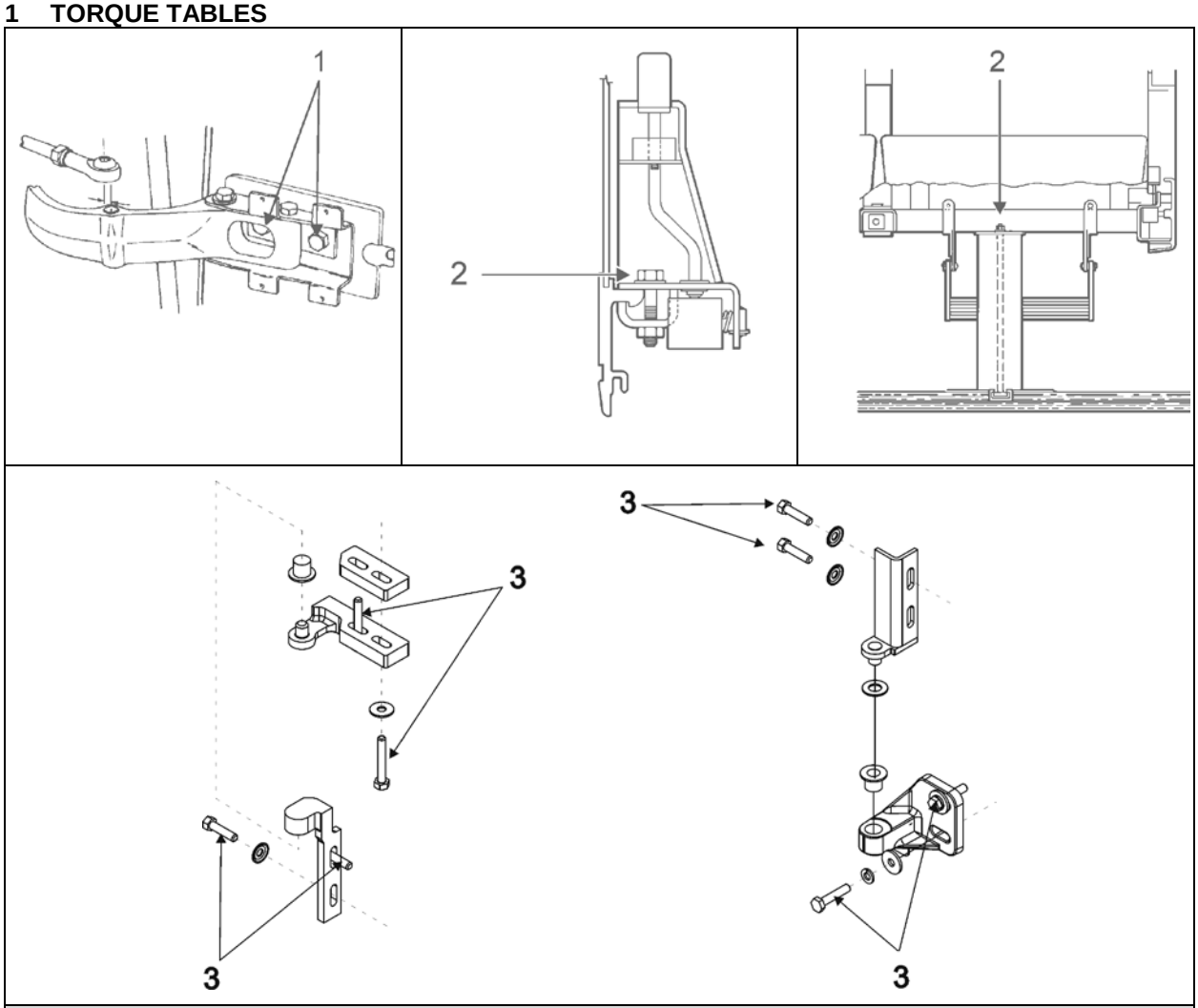

BODY		
No	DESCRIPTION	TORQUE
1	Entrance door horizontal adjusting bolts	55-65 lb-ft (75-88 Nm)
2	Passenger seat mounting nuts (to sidewall and pedestal)	27 lb-ft (37 Nm)
3	Radiator door hinges bolts	68 lb-in (8 Nm)

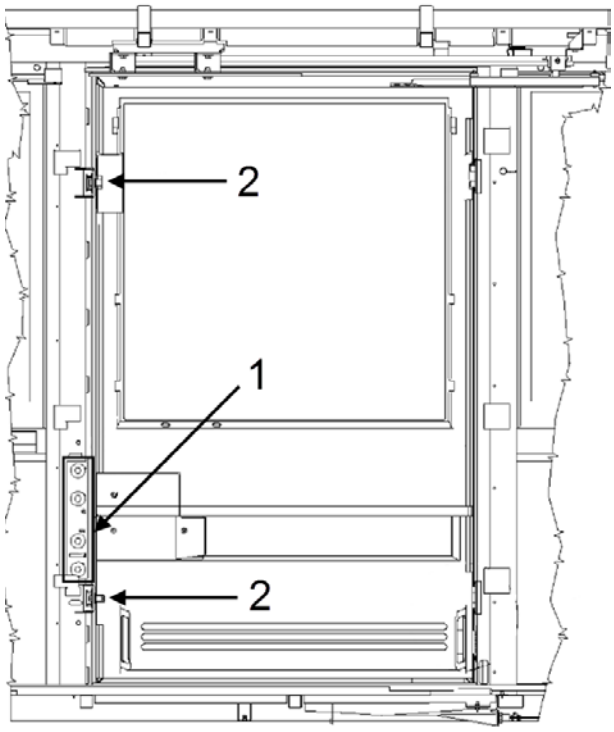

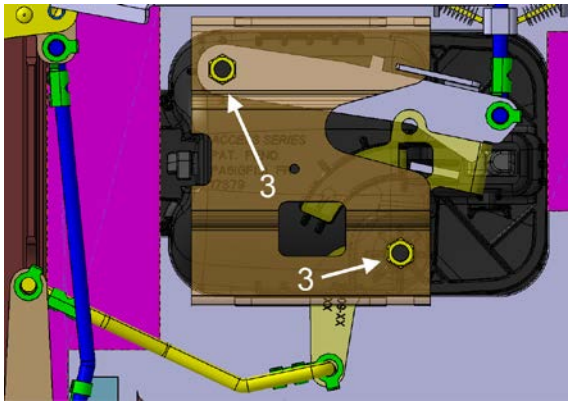

WHEELCHAIR LIFT DOOR		
No	DESCRIPTION	TORQUE
1	Wheelchair lift door – Center hinge bolts	31-38 lb-ft (42-52 Nm)
2	Wheelchair lift door - striker pin adjustment bolts	54-66 lb-ft (73-89 Nm)
3	Wheelchair lift door - opening mechanism nuts	2.5-3.5 lb-ft (3.39-4.75 Nm)

2 VEHICLE EXTERIOR

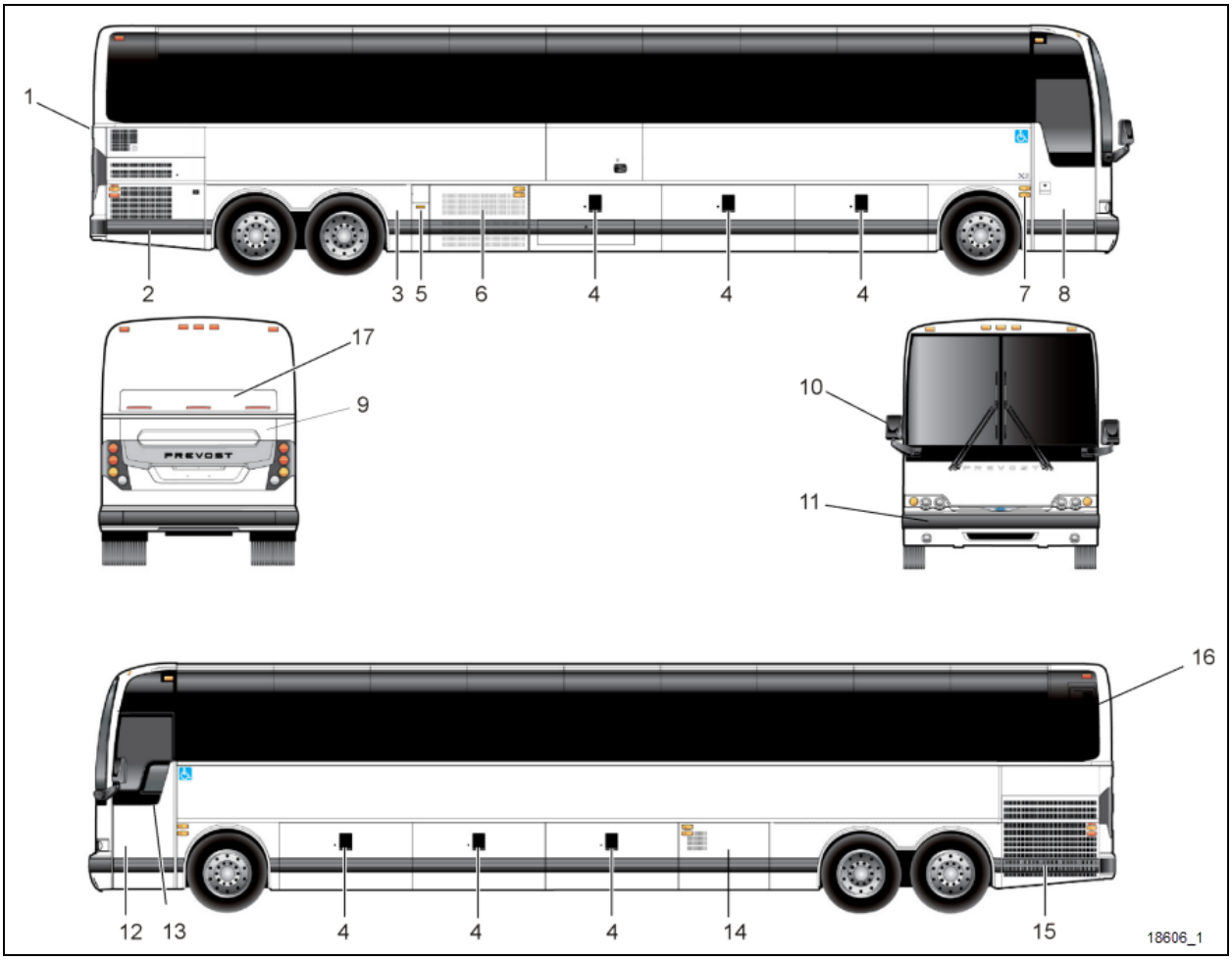

FIGURE 1: X3 COACHES EXTERIOR VIEW

1. Engine air intake
2. Engine compartment R.H. side door
3. Hinged rear fender
4. Baggage compartment
5. Fuel filler door
6. Condenser or baggage compartment
7. Entrance door switch
8. Entrance door
9. Engine compartment rear door
10. Rear-view mirror
11. Reclining bumper
12. Front electrical and service compartment
13. Driver’s power window
14. Evaporator or baggage compartment
15. Radiator door
16. Catalytic Converter access door
17. Slide-Out (Optional)
18. Exhaust Aftertreatment System access door

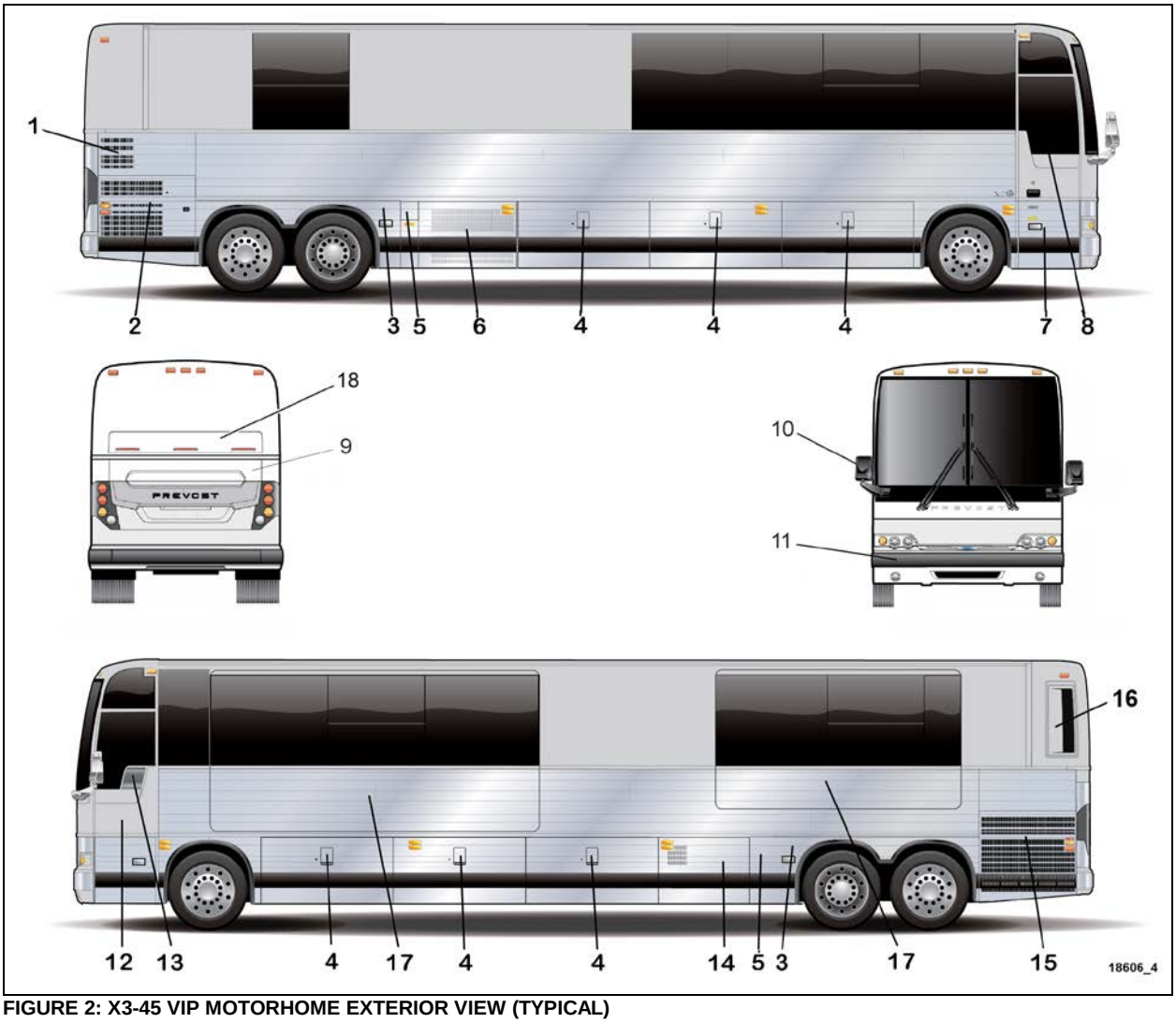

FIGURE 2: X3-45 VIP MOTORHOME EXTERIOR VIEW (TYPICAL)

1. Engine air intake
2. Engine compartment R.H. side door
3. Hinged rear fender
4. Baggage compartment
5. Fuel filler door
6. Condenser or baggage compartment
7. Entrance door
8. Entrance door power window
9. Engine compartment rear door
10. Rear-view mirror
11. Reclining bumper
12. Front electrical and service compartment
13. Driver's power window
14. Evaporator or baggage compartment
15. Radiator door
16. Catalytic Converter access door
17. Slide-Out (Optional)
18. Exhaust Aftertreatment System access door

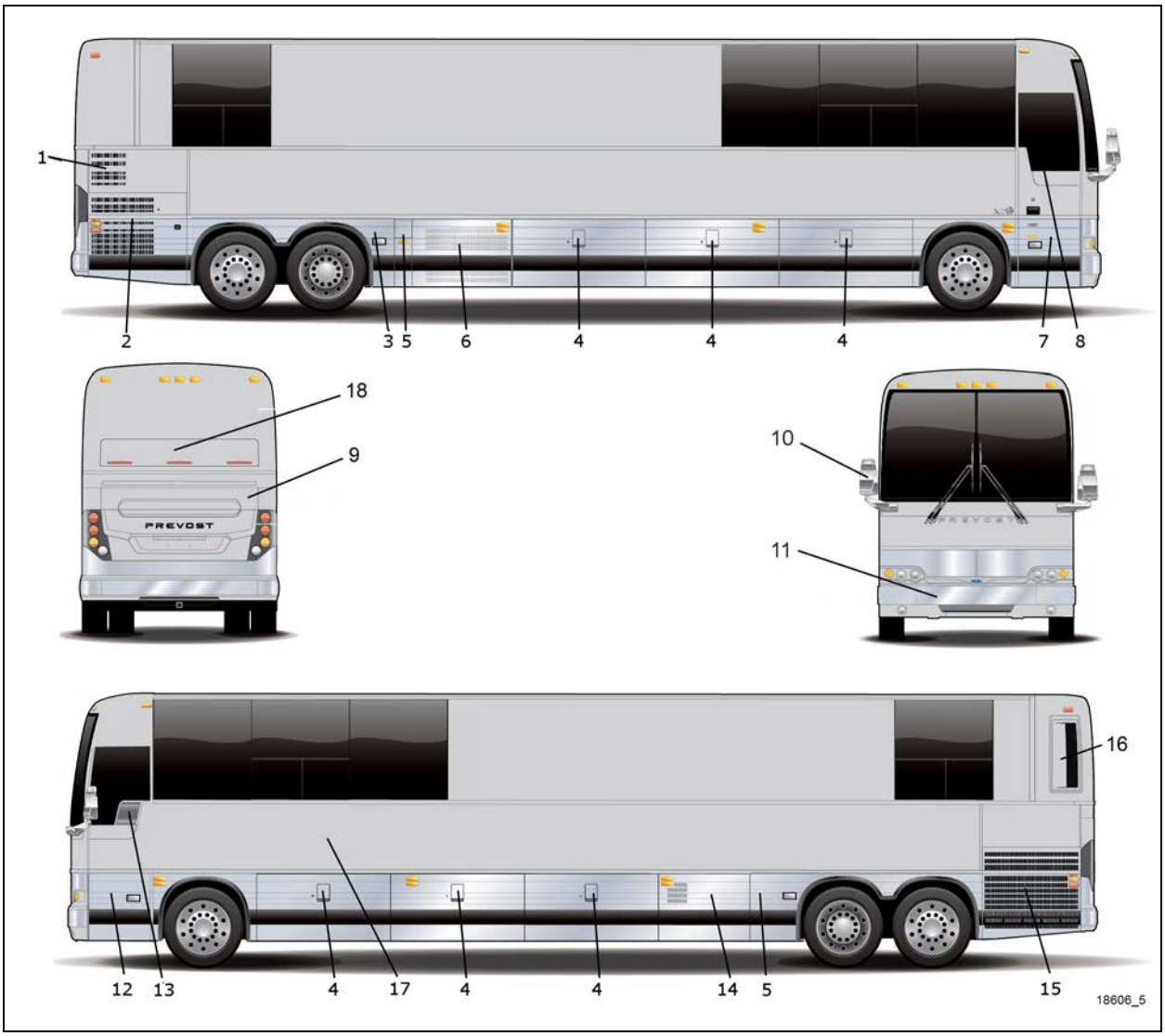

FIGURE 3: X3-45 VIP COMMERCIAL USE VEHICLE EXTERIOR VIEW (FRONT SLIDE-OUT)

1. Engine air intake
2. Engine compartment R.H. side door
3. Hinged rear fender
4. Baggage compartment
5. Fuel filler door
6. Condenser compartment
7. Entrance door
8. Entrance door power window
9. Engine compartment rear door
10. Rear-view mirror
11. Front reclining bumper
12. Front electrical and service compartment
13. Driver’s power window
14. Evaporator compartment
15. Radiator door
16. Catalytic Converter access door
17. Front Slide-Out (Optional)
18. Exhaust Aftertreatment System access door

3 VEHICLE JACKING POINTS

The vehicle can be lifted by applying pressure under body jacking points or front and drive axle jacking points. When it is necessary to lift the vehicle, care should be taken to ensure that the pressure is applied only on the specified areas. Equipment for lifting the front of the vehicle must have a combined lifting capacity of at least 20,000 lb. (9 100 kg). Equipment for lifting the rear of the vehicle must have a combined lifting capacity of at least 40,000 lb. (18 200 kg).

WARNING

DO NOT tow or jack vehicle with people on board.

WARNING

When it is necessary to raise the vehicle, care should be taken to ensure that pressure is applied only at the points indicated in Figure 4 to Figure 10.

WARNING

Extra lift capacity may be required if luggage or any other type of load (e.g. conversion equipment) are onboard the vehicle.

CAUTION

The suspension of the vehicle must be in the normal ride position before jacking. The "Level Low" system on X3-45 VIP must be in the "DRIVE" position prior to turning the ignition key "OFF".

Twelve jacking points are located on the vehicle: three are located on each side of the frame and two are located under each axle. Refer to the following illustrations for the location of jacking points.

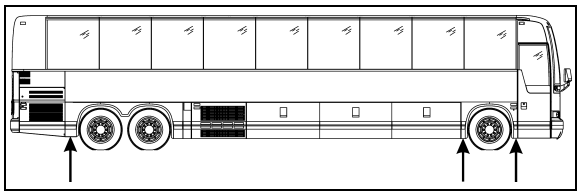

FIGURE 4: JACKING POINTS ON FRAME

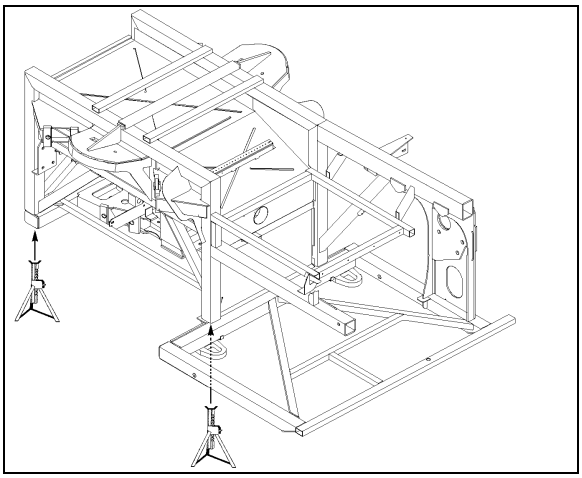

FIGURE 5: FRONT END JACKING POINTS 18592

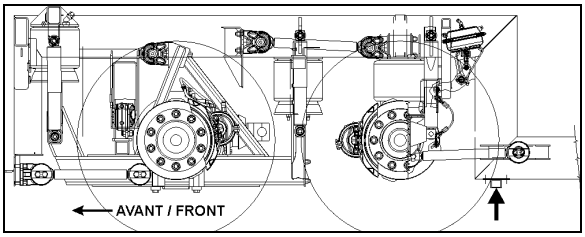

FIGURE 6: REAR END JACKING POINTS

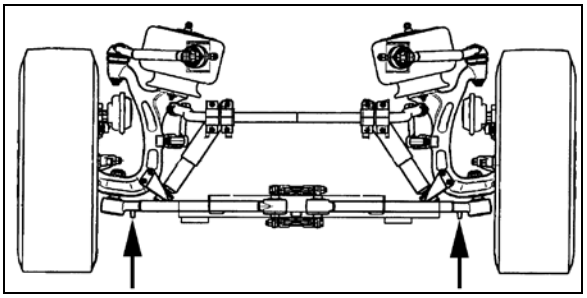

FIGURE 7: JACKING POINTS ON IND. SUSPENSION 16095

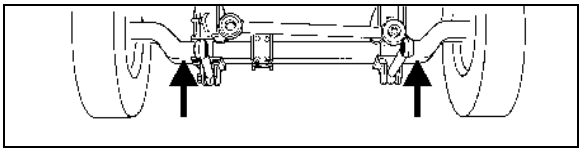

FIGURE 8: JACKING POINTS ON I-BEAM FRONT AXLE

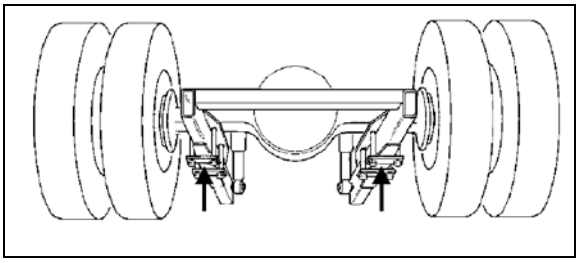

FIGURE 9: JACKING POINTS ON DRIVE AXLE OEH3B762

CAUTION

Always unload or retract the tag axle before jacking the vehicle from the front and drive axle jacking points to prevent damage to suspension components.

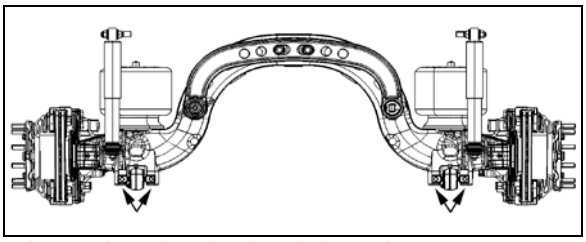

FIGURE 10: JACKING POINTS ON TAG AXLE OEH3B764

WARNING

The jacking points on the tag axle must be used for raising the tag axle only.

Several kinds of hydraulic jacks can be used. Only jack at the specified jacking points. Jack must support the following capacities:

Front axle: 20,000 lb. (9 100 kg);

Drive axle: 40,000 lb. (18 200 kg).

3.1 HYDRAULIC JACK

To raise: turn release valve clockwise. Insert handle in socket and raise vehicle by pumping.

To lower: remove handle and turn the release valve slowly counterclockwise.

Always keep ram and extension screw retracted when jack is not in use.

Service: Check oil level when jack fails to raise to full height. Lower ram completely with release valve open and jack in upright position, remove filler plug and refill to level of filler hole with hydraulic jack oil. Never use brake fluid.

DANGER

Jack is intended for lifting only. Do not get under the vehicle or load for any reason unless it is properly supported with safety stands and securely blocked.

DANGER

Do not overload jack above rated capacity. Prevent "side loading", make sure load is centered on ram. Do not push or tilt load off jack.

4 TOWING THE VEHICLE

The vehicle can be transported on a low bed semi-trailer of adequate gross axle weight capacity. When transporting a vehicle, apply parking brake and shut down the engine. Block all wheels and secure vehicle with tie-downs. Check that overall height will clear obstacles on the route to follow, and obtain required permits.

The vehicle can also be towed by lifting the front axle or by towing from the front with all wheels on the ground. These two methods are described below under their respective headings. Whatever the method used, the vehicle should be towed by truck operators authorized and experienced in towing highway coaches.

Observe normal precautions including, but not limited to, the ones listed below when towing the vehicle:

- Make sure the parking brake is released before towing.
- Do not allow passengers to ride onboard the towed vehicle.
- Tow the vehicle at a safe speed as dictated by road and weather conditions.
- Accelerate and decelerate slowly and cautiously.

To prevent damage to the vehicle, use the two tow eyes located under the back bumper and/or fixed to the vehicle's frame between the front axle and the front bumper. Use only a solid link tow bar and a safety chain to tow the vehicle. If required, connect an auxiliary air supply to the vehicle so brakes can be operated while towing.

WARNING

During a towing operation, the driver should be alone inside the vehicle.

CAUTION

To prevent damage to the drive train components, disconnect axle shafts or driveshaft before towing. Do not attempt to push or pull-start a vehicle equipped with an automatic transmission or automated mechanical transmission.

Failure to disconnect the driveshaft, remove the drive axle shafts or lift the drive wheels off the ground before towing can cause serious transmission damage and void the warranty..

CAUTION

Make sure axle shafts or driveshaft are installed correctly after towing. Tighten axle shaft and driveshaft nuts to the correct torque settings. Do not invert shafts

4.1 LIFTING AND TOWING

The towed vehicle must be lifted from under the front axle only. The tow truck must be equipped with the proper lifting equipment to reach under the front axle since no other lifting points are recommended. Lifting and towing from any other point are unauthorized as it may cause serious damage to the structure. Do not unload or raise the tag axle when lifting and towing to prevent overloading the drive axle.

1. Remove both drive axle shafts to prevent damage to the transmission. Plug axle tube to prevent oil loss. Refer to Arvin Meritor *"Maintenance manual no.5"* included on your Technical Publications USB flash drive, for correct procedure.

CAUTION

Transmission lubrication is inadequate when towing. The drive axle shafts must be removed to avoid serious damage to the transmission.

Failure to disconnect the driveshaft, remove the drive axle shafts or lift the drive wheels off the ground before towing can cause serious transmission damage and void the warranty..

2. Operate the engine when towing to maintain brake system air pressure. If the engine cannot be operated, connect an external air pressure line from the tow truck to the emergency fill valve in the engine compartment.
3. The emergency fill valve in the front service compartment does not supply air pressure to the brake system. The air pressure must be a minimum of 75 psi (520 kPa), and the line should be attached to the air line with a clip-on chuck.

WARNING

Do not tow the vehicle without external air pressure applied to the emergency fill valve if the engine does not operate. Without brake system air pressure, the brakes may apply automatically if system air drops below 60 psi (413 kPa). If failure prevents releasing the parking brakes with air pressure, disengage the parking brakes mechanically.

4. Lift the vehicle from under the front axle, and adequately secure the underside to the tow vehicle lifting attachment with chains.
5. Observe safety precautions when towing.

4.2 TOWING WITHOUT LIFTING

WARNING

When towing vehicle without lifting, use only a tow truck with a solid link tow bar and related equipment. All other means of towing are unauthorized. Tow only from the front of the vehicle.

1. Remove both drive axle shafts to prevent damage to the transmission. Plug axle tube to prevent oil loss. Refer to Arvin Meritor *"Maintenance manual no.5"* included on your Technical Publications USB flash drive, for correct procedure.

CAUTION

Transmission lubrication is inadequate when towing. The drive axle shafts must be removed to avoid serious damage to the transmission.

CAUTION

Failure to disconnect the driveshaft, remove the drive axle shafts or lift the drive wheels off the ground before towing can cause serious transmission damage and void the warranty.

2. Operate the engine when towing to maintain brake system air pressure. If the engine cannot be operated, connect an external air pressure line from the tow truck to the emergency fill valve in the engine compartment. The emergency fill valve in the front service compartment does not supply air pressure to the brake system. The air pressure must be a minimum of 75 psi (520 kPa), and the line should be attached to the air line with a clip-on chuck.

WARNING

Do not tow the vehicle without external air pressure applied to the emergency fill valve if the engine does not operate. Without brake system air pressure, the brakes may apply automatically if system air drops below 60 psi (413 kPa). If failure prevents releasing the parking brakes with air pressure, disengage the parking brakes mechanically.

3. Position the tow truck so that the tow bar contacts the front bumper of the vehicle.
4. Attach the tow truck chains only in the tow eyes of the vehicle under the bumper and take up all the slack.
5. Attach safety chains as applicable.
6. Observe safety precautions when towing.

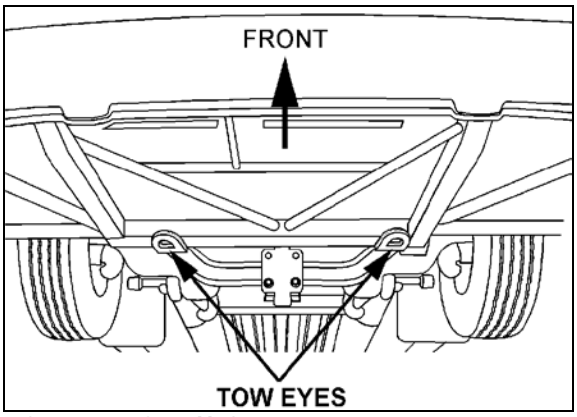

FIGURE 11: TOW EYES

4.3 VOLVO I-SHIFT ALTERNATE TOWING MODE

If the standard towing procedure can't be followed due to road condition or local road regulations (tunnels, bridges, etc), follow the alternate procedure described below.

CAUTION

This procedure applies only to coaches with **D series** Volvo **I-Shift** transmissions **(AMT-D)** provided with alternate towing mode software.

Forward towing only! Reverse towing (backing-up) is not allowed with this procedure or damage to the gearbox will occur.

CAUTION

This procedure should not be used in replacement of the standard towing procedure.

This procedure does not have any indicator confirming mode activation, therefore, if any of the steps below are not fulfilled, transmission damage may occur.

Applying the procedure will allow tow mode to be activated and vehicle to be towed without the removal of the driveshaft for whatever distance the vehicle needs to be towed.

Towing gear **3 HR** will be engaged if conditions below are fulfilled in the following sequence:

A. *Ignition key must be in the "ON" position*

B. *Engine not running*

C. *Adequate air pressure to the gearbox/ Vehicle must have electrical power*

D. *Shift pad must be in neutral*

E. *Vehicle must be towed FORWARD only*

5 VEHICLE STRUCTURE

The body of the X Series vehicles is an integral structure made of 14, 16 and 18 gauge welded and braced high tensile steel and stainless steel members. All stainless exterior panels are glued to anti-corrosion coated members. The complete structure is protected against corrosion prior to assembly. The front and rear caps are made of molded fiberglass. The main roof is made of high tensile aluminum panels riveted to the roof structure. The floor is made of 2 layers of ½" (13 mm) thick plywood separated by a 1/8" (3 mm) insulation to reduce power train and road noises.

Welding

Since welding is a procedure that may be carried out either as specific instructions from Prevost or by an independent decision of the owner, the following information pertaining to welding should be read before beginning any welding procedure. The prohibitions and requirements outlined below must be followed during welding procedure:

1. Welding must be done only by a qualified and experienced person.
2. Adequate ground contacts and shields must be positioned as required to protect components from damage due to heat, contact by weld splatter, arcing, or other potentially damaging events associated with welding.
3. The following precautions are to be taken to protect the electronic control components. Refer to section 00, paragraph 3: “PRECAUTIONS TO BE OBSERVED BEFORE WELDING” in this manual.
4. Always wear the appropriate safety equipment.
5. Weld in clean and well-ventilated area, and always have an appropriate fire extinguisher within your reach.

6 VEHICLE EXTERIOR MAINTENANCE

Regular washing to remove dust and dirt is recommended. See *"Owner's Manual"* for more details on washing and cleaning your vehicle.

6.1 CORROSION PREVENTION

Preventive maintenance is a key factor in avoiding corrosion and must be considered as part of the regular service intervals. The entire underside of the vehicle is sprayed with a heavy application of asphalt base undercoating.

The operating environment the vehicle is subjected to will largely influence the amount of dirt and corrosion that will accumulate over a given period. Corrosion is one of the most costly factors of part failure and shortened part life. It is, however, an item that can be controlled when it is conscientiously looked after and the proper steps are taken in a timely manner.

Certain areas of the coach are more vulnerable to corrosion than others, and it is these areas that should be addressed. For example, the rear baggage compartment bulkhead in the rear wheelhousing area contains many key components and should be examined regularly for corrosion. Other areas include the front wheelhousing area and the engine compartment.

Road splash will affect undercarriage, condenser coil and engine compartment. These areas must be thoroughly cleaned to remove dirt accumulations from flanges, channels and ledges. These places accumulate dirt and salt and hold it in direct contact with steel and aluminum surfaces. Use an understructure high pressure spray as part of a regular wash. Damaged undercoating or paint should be promptly repaired before corrosion can start.

Frequency of wash periods depends on operating conditions. During periods of exposure to salt, daily washing as described above is recommended. If underbody parts show evidence of rust or corrosion, treat as follows:

1. Remove dirt, grease and oil by solvent washing.
2. Remove corrosion as well as all loose coating by cleaning with a wire brush or sandblasting.

CAUTION

Sandblasting can be used for cleaning bulkheads, brackets and other structural

members. It should not be used for exterior side paneling. Extreme care should be taken not to sandblast excessively.

3. Apply correct primer, paint and undercoating after removing all corrosion to prevent further damage.

6.2 PREVENTIVE MAINTENANCE SCHEDULE

NOTE

TECTYL 185 GW rust inhibitor may have been applied on your vehicle underbody as an option, if this is the case, follow this procedure thoroughly. For future application of product, refer to paragraph 3.3 in this section.

DESCRIPTION	INTERVALS		MAINTENANCE	CORRECTIVE ACTION	REFERENCE
	MONTHS	KM MILES			
BODY, EXTERNAL WINDOW FRAME	6	40 000 25 000	VISUALLY INSPECT SEALING BEADS CONDITION	REPAIR OR REPLACE SEALING BEADS IF NECESSARY	
VEHICLE UNDERBODY	12	100 000 60 000	USE A LOW PRESSURE SPRAY TO CLEAN UNDER-STRUCTURE AND VISUALLY INSPECT FOR CALCIUM DEPOSIT, CORROSION OR ANY DIRT ACCUMULATED ONTO EXPOSED SURFACES. VISUALLY INSPECT SEALING BEADS CONDITION. VISUALLY INSPECT IF UNDERFLOOR IS PEALING. VISUALLY INSPECT WHEELHOUSING COATING. MAKE SURE DISCHARGE TUBES ARE FREE FROM OBSTRUCTIONS	APPLY UNDERCOATING LOCALLY AS NECESSARY. APPLY UNDERCOATING LOCALLY AS NECESSARY REMOVE ANY OBSTRUCTION OR REPLACE DEFECTIVE TUBE	
SUSPENSION AND UNDER-STRUCTURE	12	100 000 60 000	VERIFY THE CONDITION OF ALL SUSPENSION AND UNDERSTRUCTURE FASTENERS AND CLAMPS	TIGHTEN OR REPLACE DEFECTIVE OR MISSING FASTENERS	
FLOOR COVERING	3	20 000 12 500	VISUALLY INSPECT IF FLOOR COVERING IS SHOWING SIGNS OF DETERIORATION SUCH AS CUTS, BURNS, ETC. ALSO, VISUALLY INSPECT SEALANT ALONGSIDE TRACKS. INSPECT WALL PANELS FROM BOTTOM TO WINDOWS	REPAIR OR REPLACE DEFECTIVE COVERING. MAKE SURE PROPER SEALANT IS USED.	
FLOOR CLEANING			CLEAN FLOOR COVERING AS NECESSARY		

WARNING

Failure to follow this preventive maintenance schedule will result in warranty void.

6.3 RUST INHIBITOR APPLICATION

Material: Tectyl 185 GW R1KG21

Safety Rules: Use safety glasses
Supplied air hood
Solvent-resistant rubber gloves

1.0 Wash both wheelhousing mechanical parts before masking.	A water-hose nozzle is recommended. Water may be hot to reduce washing time especially during winter. If parts are soiled with oil, clean using R1KG21. Avoid rubber parts.
2.0 Dry all water sprayed parts. Surface temperature and dew point must be respected before applying rust inhibitor.	Air pressure system may be used, refer to annex 1 for surface temperature and dew point.
3.0 **Front wheelhousing** a) Mask all rubber joints. Braking system must also be protected (refer to arrows). Commercial aluminum foil may be used for masking.	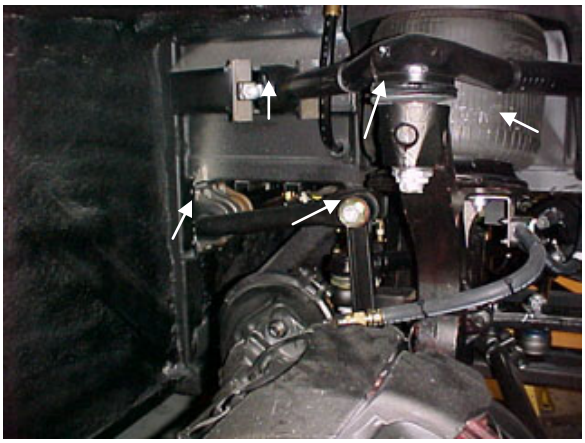
3.1 **Front wheelhousing** Front view	

3.2 **Front wheelhousing**	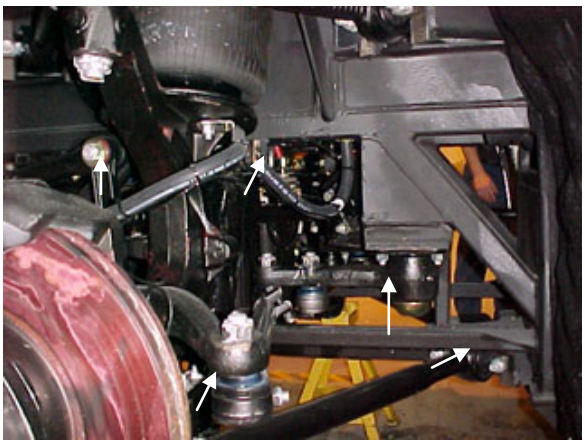
3.3 **Front wheelhousing** (Entire braking system)	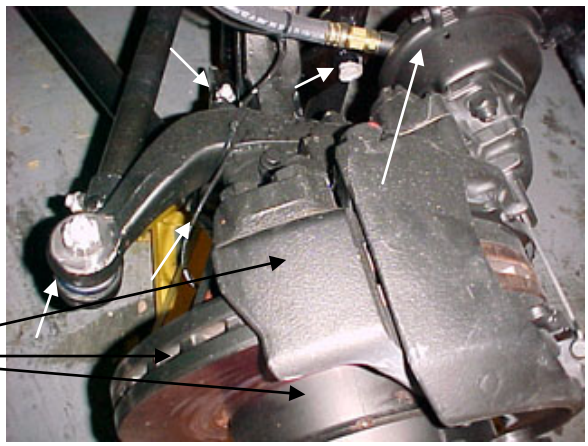
4.0 **Rear wheelhousing** a) Mask all rubber joints. Braking system must also be protected (refer to arrows). Commercial aluminum foil may be used for masking (Entire braking system)	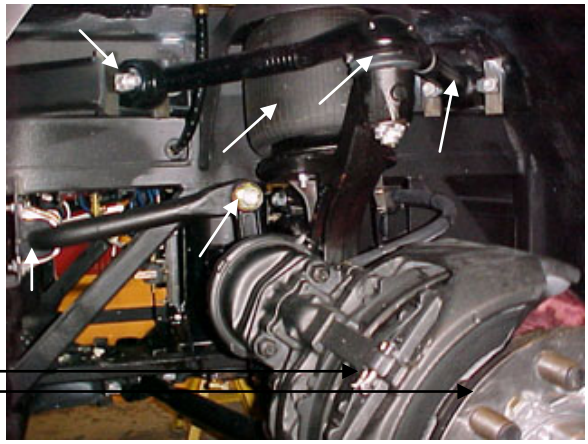

4.1 **Rear wheelhousing** (Entire braking system)	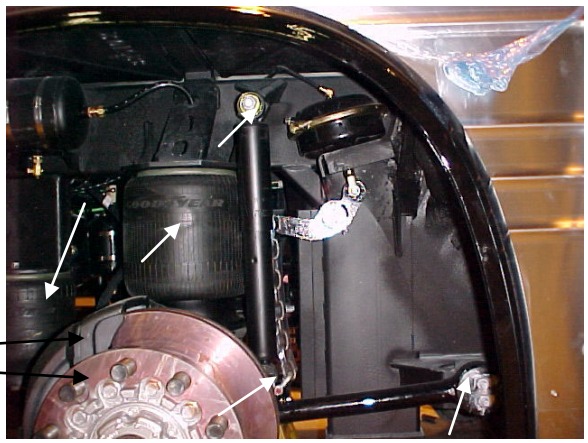
4.2 **Rear wheelhousing** (Entire braking system)	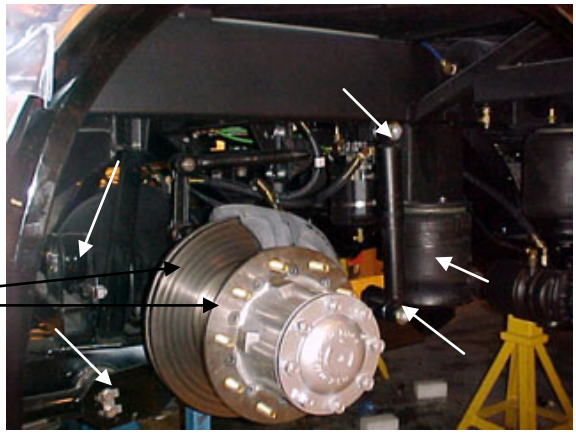
4.3 **Rear wheelhousing**	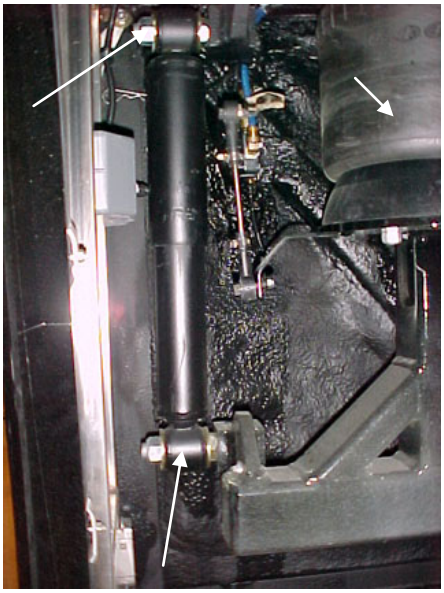
5.0 Close off wheelhousing using masking paper.	Prevent rust inhibitor from coming in contact with paint. To close off wheelhousing, a polythene sheet may be used.
6.0 Apply TECTYL 185 GW black rust inhibitor onto wheelhousing mechanical parts.	A spray gun and pumping system are required to apply the rust inhibitor. If the application is done inside a paint room, select high speed ventilation. **Minimum required**

	thickness is 10 mils wet or 5 mils dry.
7.0 Remove all masking material 30 minutes after application.	

ANNEX 1

1. Check and confirm that dew point and surface temperature are in accordance with the following criteria:

   Surface temperature > 10°C

   Surface temperature > or = to dew point + 3°C

NOTE
Use the following table to determine dew point.

2. Check and confirm that TECTYL temperature is between 10°C and 35°C.

DEW POINT

	Relative Humidity (%)									
	10	20	30	40	50	60	70	80	90	100
Temp (c)										
0	---	-16	-11	-8	-5	-3	-1	0	1	3
1	---	-15	-10	-7	-5	-3	-1	1	2	4
2	---	-14	-10	-6	-4	-1	0	2	3	5
3	---	-13	-9	-5	-3	-1	1	2	4	6
4	---	-13	-8	-5	-2	0	2	4	5	7
5	---	-11	-7	-4	-1	1	3	5	6	8
6	---	-11	-8	-3	0	2	4	6	7	9
7	-18	-10	-6	-2	0	2	5	6	8	10
8	-17	-9	-5	-1	1	4	6	7	9	11
9	-16	-9	-4	-1	2	4	6	9	10	12
10	-16	-8	-3	0	3	5	7	10	11	13
11	-15	-7	-3	1	4	6	9	10	12	14
12	-14	-6	-1	2	5	7	10	11	13	15
13	-14	-6	-1	2	6	8	10	12	14	16
14	-13	-5	0	4	6	9	11	14	15	17
15	-12	-4	1	4	7	10	12	14	16	18
16	-11	-4	1	5	9	11	13	15	17	19
17	-10	-3	2	6	9	12	14	16	18	20
18	-10	-2	3	7	10	13	15	17	19	21
19	-9	-1	4	8	11	14	16	18	20	22
20	-9	0		5	9	12	15	17	19	21	23
21	-8	0		5	10	13	16	18	20	22	24
22	-7	1		6	11	14	16	19	21	23	25
23	-6	2		7	11	15	17	20	22	24	26
24	-6	2		8	12	16	19	21	23	25	27
25	-5	3		9	13	16	20	22	24	26	28
26	-4	4		10	14	17	20	23	25	27	29
27	-4	5		11	15	19	21	24	26	28	30
28	-3	6		11	16	19	22	25	27	29	31
29	-2	6		12	17	20	23	26	28	30	32
30	-1	7		13	17	21	24	27	29	31	33
31	-1	8		14	19	22	25	27	30	32	34
32	0	9		15	20	23	26	29	31	33	35

7 COMMON FIBERGLASS REPAIR PROCEDURE

All repairs to fiberglass parts consist of filling the damaged area with fiberglass cloth and resin or strand fiberglass and resin. The repair is allowed to harden, and then finishing operations may be performed. Use of the various materials is determined by the type of repair to be made. Large holes, torn sections and separate joints require the adhesive qualities of the resin and the reinforcing qualities of the fiberglass. Small dents, scratches or pits can be repaired using resin and strand fiberglass and filler mixed into paste. Instructions for either mix are explained under their respective headings in this section. For best results when making repairs, temperature should be between 70 and 75 ^{o}F (21-24 ^{o}C). Some people experience a skin reaction to resins. In such cases, wipe resin off with denatured alcohol or a good thinner. Use of protective hand cream is recommended.

WARNING

Always wear a respirator and goggles when grinding or sanding.

Extreme care must be taken if the sander is electrically operated, as dust from some resins is combustible when subjected to sparks or open flames. The proper tool for sanding resin is a low speed, air driven disc sander with a water attachment or a dry sander having a vacuum bag. Either will eliminate flying glass and resin dust.

The following additional tools and materials will assist in making repairs: hacksaw blade, assorted files, emery paper or cloth (150 or finer), scissors or tin snips, wax paper or cellophane sheets, a 3" (75 mm) paint roller, paint brush, putty knife, acetone and one or more heat lamps.

7.1 REPAIR USING FIBERGLASS CLOTH

Where necessary, sand paint away around damaged area and scrape away undercoating, if any, and wipe clean with solvent. Grind or file the damaged area to form a "V" at the broken or cracked portion. Sides of "V" should have a shallow pitch for maximum bonding area.

NOTE

Roughening the surface improves adhesion of resin.

If part is warped from original shape, use clamping equipment to straighten the surface. Preheat area to be repaired with one or two heat lamps placed 18 to 24 inches (450-610 mm) from repair.

CAUTION

Temperature should not exceed 140 ^{o}F (60 ^{o}C) during 30 minutes in order to avoid distortion.

Cut fiberglass cloth with scissors or tin snips, 1 to 3 inches (25-75 mm) larger than area to be repaired. Build area to desired height.

Mix resin and hardener following instructions on their containers. Saturate layers of fiberglass with mixture and place laminates over damaged area. Smooth out wrinkles and make sure general contour of area is maintained. Bubbles and wrinkles can be eliminated with a roller.

CAUTION

The pot life of the mix is approximately 15 minutes. Any accidental contamination to the skin, clothing, tools, etc. must be removed within this period. Use acetone to remove uncured resin.

Heat resin material again by placing heat lamps 18 to 24 inches (450-610 mm) from repaired area. Allow 12 to 15 minutes for repair to cure. After repair is cured, grind, file or sand to contour. Files other than body files may be more suitable. Featheredge and finish sanding.

If small pits or irregularities appear after making repair, correct by using a liberal amount of chopped strand or filler mixed with resin to form a paste. Refer to heading *"Repair using Fiberglass Paste"* in this section.

7.2 REPAIR USING FIBERGLASS PASTE

Fiberglass paste is used for repairing small dents, scratches, and pits. Paste is made by mixing resin, hardener and fiberglass strand or filler to the consistency of putty. Where it may be necessary, sand paint away around damaged area. On underside of coach, scrape away

undercoating from damaged area, and wipe clean with solvent.

Preheat the area to be repaired using heat lamps. Mix desired quantities of resin and hardener according to manufacturer's instructions. Add powdered fiberglass strand into mixture to thicken it into a putty state.

NOTE
If repair is made on a vertical surface, adding powdered filler material to mixture will reduce tendency of hot resin to flow or run.

Apply the material with a putty knife or similar object, building material up to the desired contour. For deep filling and on vertical surfaces, several layers of material may be used.

A hacksaw blade, held flat to adjacent contour and then moved in a sawing action across the repair when the resin is in a gel state, will remove excess resin from repair. Finish repair with the same procedure as when using fiberglass cloth.

7.3 TYPICAL FIBERGLASS REPAIR PROCEDURE

Remove all loose particles or damaged material using a power sander or rasp. Clean area, overlapping hole approximately 1" to 1-½" (25-40 mm) all around. Remove all dirt, grease and paint from area to ensure good bonding surface. Feather the cleaned area all around (Figure 12).

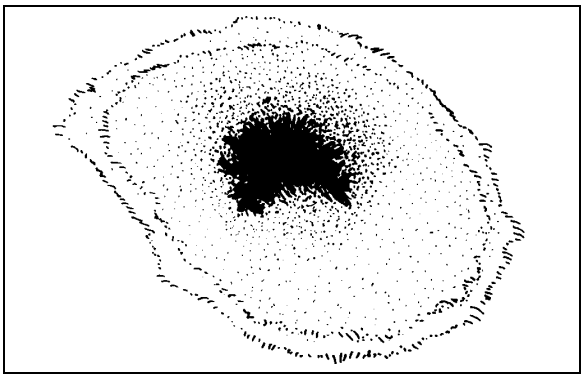

FIGURE 12: FIBERGLASS REPAIR 18089

Cut a piece of fiberglass mat slightly larger than area being repaired. Impregnate mat with general purpose polyester resin catalyzed normally. Use a clean paint brush to apply the polyester resin. Apply impregnated mat over hole and press onto surface with brush to obtain good adherence. Another coat of general purpose polyester resin can be applied at this time (Figure 13).

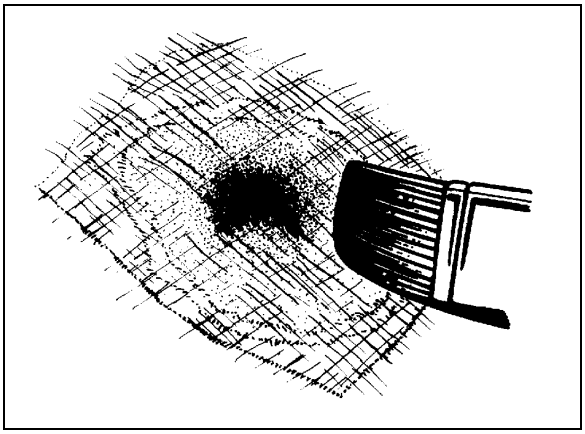

FIGURE 13: FIBERGLASS REPAIR 18090

NOTE
Remove all air between surfaces being joined. Allow area to harden and sand surface to remove any wax.

Apply another mat, followed by a cloth patch, and another mat. All layers must be thoroughly impregnated with polyester resin, brushed well and free of air. Apply more layers of mat and cloth as required until the desired strength and thickness is obtained, minimum two 1-½ oz (43 g) mats and one 9 oz (255 g) cloth (Figure 14).

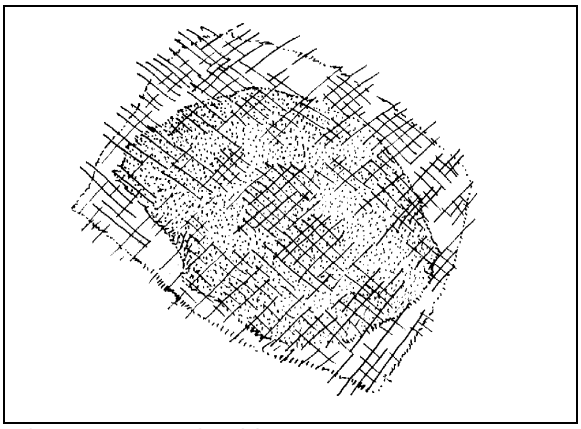

FIGURE 14: FIBERGLASS REPAIR 18091

Allow area to harden and contour the area with coarse sandpaper #100 (Figure 15).

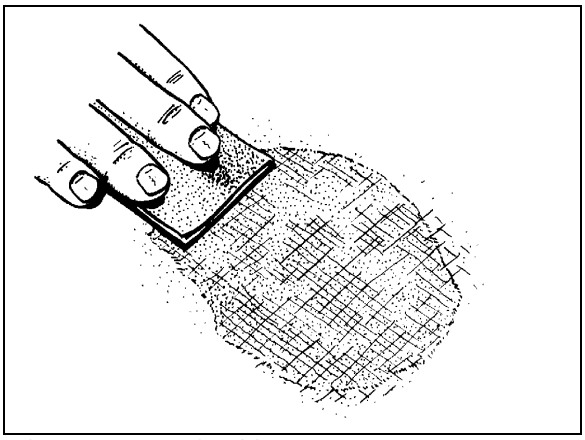

FIGURE 15: FIBERGLASS REPAIR 18092

Cover the area with a layer of resin putty and allow drying for approximately 15 to 20 minutes (Figure 16).

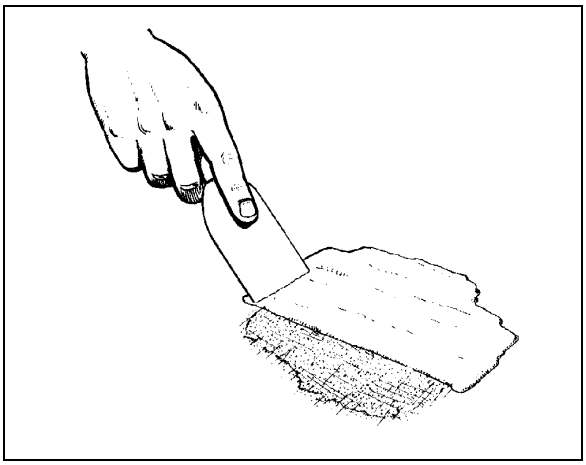

FIGURE 16: FIBERGLASS REPAIR 18093

Smooth off surface with coarse sandpaper #100 to desired shape. Further smooth surface with fine sandpaper #120 until repaired surface matches surrounding area paneling. Prime and paint the area to match surrounding paintwork.

8 COMMON PAINTING PROCEDURE

8.1 NEW PAINT CARE

Our paint supplier recommends that you follow these simple precautions the first months of your new vehicle's life.

CAUTION

Apply these recommendations after repainting vehicle.

During the first 30 days:

- Do not use a commercial bus wash. Stiff brushes or sponges could mar the finish and damage the surface. Wash the vehicle by hand only and with cool water and a very mild bus wash solution. Be careful to use only a soft cloth or sponge;
- Wash vehicle in the shade, never in direct sunlight;
- Do not "dry wipe" vehicle –always use clean water. Dry wiping could scratch the finish;
- Avoid extreme heat and cold. Park vehicle in the shade whenever possible;
- Do not park under trees which drop sap or near factories with heavy smoke fallout. Tree sap and industrial fallout may mar or spot a freshly painted surface;
- Trees are also likely to attract birds. Bird droppings are highly acidic and will damage a freshly painted surface. Bird droppings, tree sap and industrial fallout should be washed off as soon as possible;
- Do not spill oil, gasoline, antifreeze, transmission fluid or windshield solvent on new finish. IMMEDIATELY rinse off any such spill with clean water, DO NOT WIPE;
- Do not drive on gravel roads. Paint finish easily chips during the first 30 days;
- Do not scrape ice or snow from the surface. A snow scraper can act like a paint scraper if the finish is new. Brush off loose material with a soft snow brush.

During the first 90 days:

- Do not wax or polish the vehicle. This will allow the finish to dry and harden completely.

8.2 PAINT TOUCHUP

When paint touchup or partial repainting is necessary, refer to the vehicle's paint scheme for color codes and paint brand.

Prevost recommends using the original paint brand to ease color matching.

In the event you sand through to the gelcoat surface you should prime the area with Standox “Non Stop Fill Primer (ST-11000)”.

If you sand through to metal surface, first prime with Standox “Etch Primer (ST-11858)” then with Standox “Non Stop Fill Primer (ST-11000)”.

CAUTION

Be sure to heed all paint manufacturer’s recommendations, especially concerning paint dilution and application.

8.3 PAINTING

The standard paint used on the exterior of the vehicle is Standox Basislack. It is a high gloss polyurethane enamel finish designed for exposure to extreme conditions. Other types of paint may be called for as options by owner but are not dealt with in this section.

8.3.1 Safety

Care should be exercised in storing, handling, mixing, and applying paint and chemicals listed in this manual. The topcoat, primer, solvent, catalysts, accelerators, and cleaners are highly volatile and/or toxic if not properly used. Observe all safety instructions marked on the different packaging, as well as the following:

1. Do not smoke in the paint room or in adjacent area exposed to residue fumes.
2. Wear respirators approved by the governing safety and health regulations.
3. Maintain adequate ventilation at all times.
4. Dispose of any leftover paint mix properly.
5. Wear rubber gloves, rubber apron, and face shield during all phases of paint and chemical handling

8.3.2 Surface Preparation and Paint Application

	Aluminum and / or Stainless Steel	Fiberglass	Comments
Surface Preparation	Sand using P-150 grit sandpaper. It is recommended to sandblast rivets and panel edges with OLIMAG 35-70 blast media.	Sand using P-180 or P-240 sandpaper.	Do not use paint remover over aluminum or fiberglass.
Cleaning	STANDOX silicone remover ST-16203		
Priming	STANDOX Reactive Etch Primer ST-13908 * Wait 30 minutes then apply STANDOX HS primer ST-15161	STANDOX Non-Stop Füllprimer ST-11000 (68-2973)	Refer to product Technical Data sheet for proper mixing
Basecoat	Refer to paint scheme or coach record for proper color code and paint brand. We recommend using the same paint brand to ease color matching.		Refer to product Technical Data sheet for proper mixing
Clearcoat	Axalta Imron Clear 8430 S Allow 16 hours for drying		Refer to product Technical Data sheet for proper mixing

NOTE

Product listing above is based on factory applied products. Local VOC (Volatile Organic Compound) regulations may vary, consult your paint supplier and use a VOC compliant product that matches the factory recommendations if required to do so.

9 X3-45 COACHES EXTERIOR FINISHING AND BODY REPAIR

The following procedures explain the steps to be followed for proper repair, installation and replacement for various doors, panels and windows. The paragraph divides the vehicle into zones to facilitate the search; each zone is then sub-divided into components.

Refer to the appropriate zone then component for complete procedure.

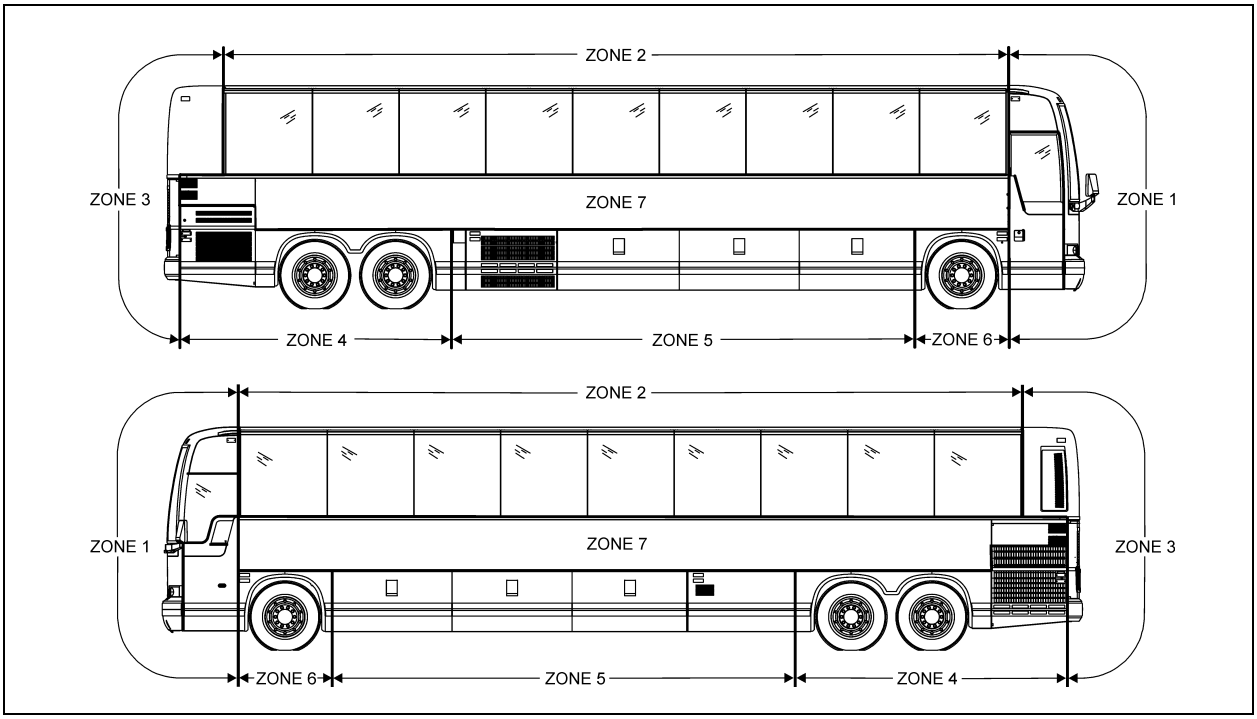

FIGURE 17: X3 COACHES ZONING 18623

9.1 ZONE 1

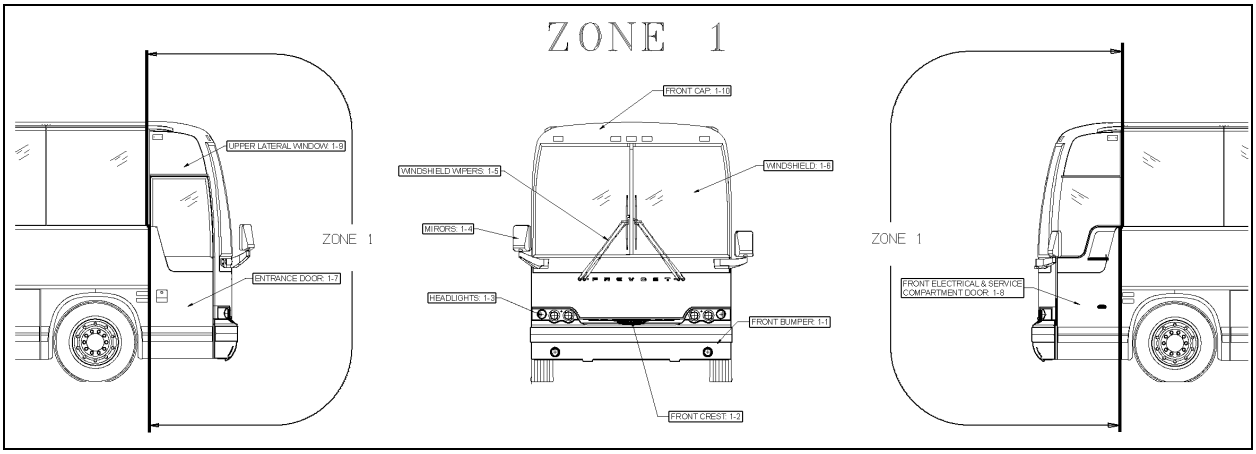

FIGURE 18: ZONE 1 18624

9.1.1 Front Bumper

The front bumper is hinged to give access to the spare wheel and tire compartment. Pull the handle located in the front service compartment to open the spare wheel and tire compartment. Bumper must first be tilted down before its removal. Two people are required to remove and install the front bumper. Safely support the bumper and remove the two bolts on each bumper side to separate the bumper from the spare wheel compartment door. To install bumper, reverse the removal procedure.

WARNING

Front bumper is heavy. Use proper lifting equipment to support the bumper during the removal and installation operations to avoid personal injury.

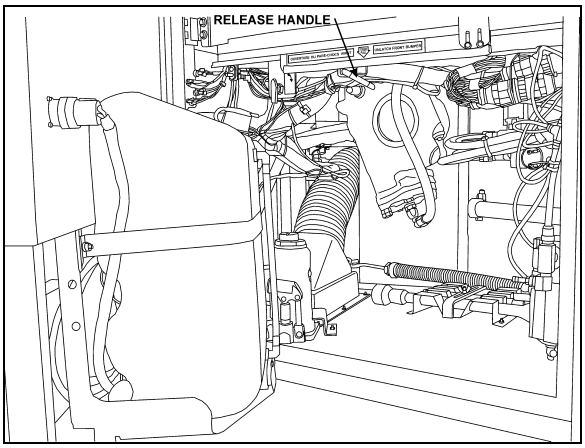

FIGURE 19: FRONT BUMPER RELEASE HANDLE 18613

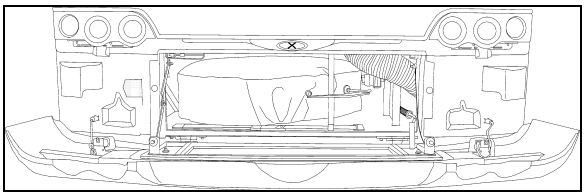

FIGURE 20: FRONT BUMPER 18614

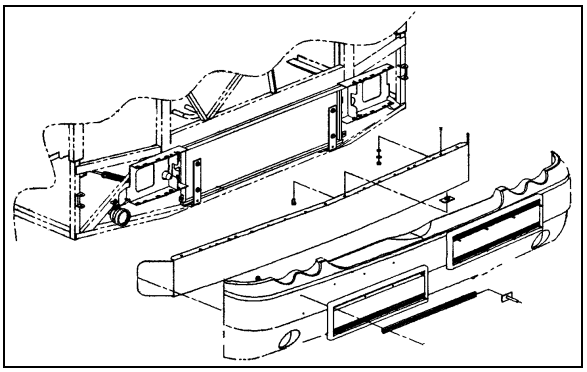

FIGURE 21: FRONT BUMPER REMOVAL 18565

9.1.2 Front Crest

- Use a Chix cloth and anti-silicone to clean the surface where the crest will be applied.

CAUTION

Do not exceed the crest dedicated surface.

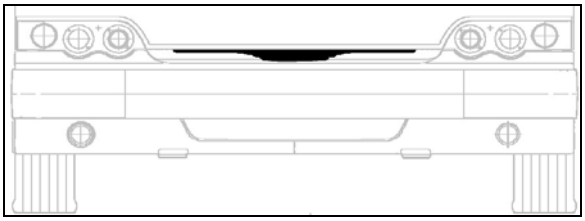

- Peel the back from the self-adhesive crest side pieces.

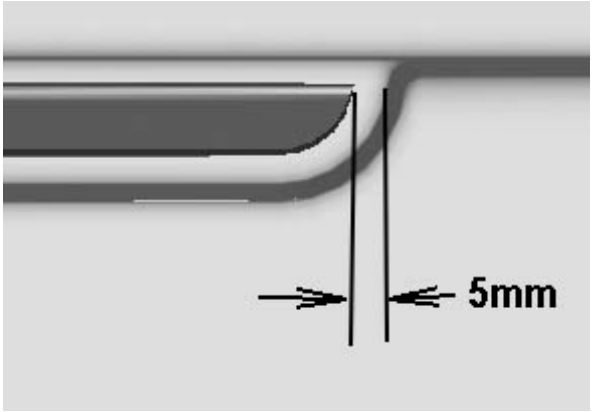

- Peel the back from the self-adhesive crest center piece. Center crest and apply.
- Compress the crest three pieces using your hands.

FIGURE 22: REAR VIEW MIRROR (RAMCO) 18398A

9.1.3 Headlights

Refer to Paragraph Headlights, included in Section 06: Electrical of the Maintenance Manual for complete information on headlights.

9.1.4 Rear View Mirrors (Ramco)

Your vehicle is equipped with two exterior mirrors.

The mirrors may be equipped with an optional electric heating system which serves to minimize ice and condensation on the mirror glass in extreme weather conditions. Integral thermostats are installed in both mirrors to avoid continuous heating. Use the appropriate switch on the dashboard to activate the defroster system on both mirrors simultaneously. The mirrors can easily be adjusted by using the remote controls located on the L.H. side control panel. The mirrors have easy to replace glass in case of breakage. Remote control motors can also be replaced.

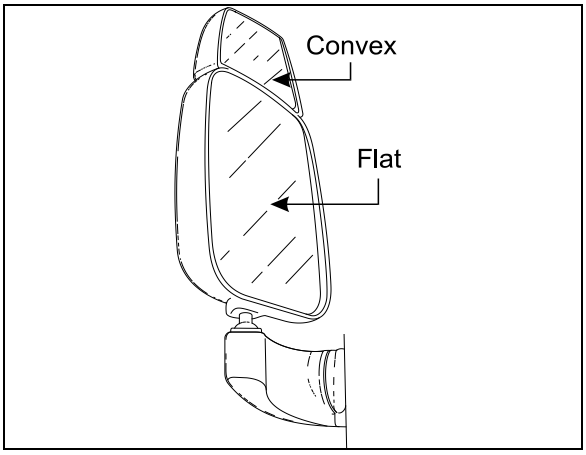

- **Adjustment**

At the base of the mirror arm, loosen the mounting bolt to swing arm in or out.
To pivot the mirror head, loosen the setscrews on each side of the ball stub at the base of the mirror head to facilitate the adjustment.

- **Disassembly**

At end of mirror arm, loosen the setscrews to relieve tension on the ball stem. Remove the ball stem from the arm.
Remove the four screws fastening the mirror arm base to the coach.

- **Assembly**

Mount the mirror arm base to the coach. Insert the ball stem into the mirror arm and tighten the socket setscrews.

NOTE
Position the ball cup halves so the joint between them lies on the centerline of the arm. Ensure that the setscrews are not on the joint between the cup halves.

- **Replacement of Mirror Glass**

Remove the broken glass.

Position new glass in mirror head and press to lock the Velcro in place.

- **Heated / Remote Controlled Rear View Mirrors**

Heated/remote controlled external rear view mirrors may be provided to prevent the mirrors from frosting up in cold weather.

The remote controlled external rear view mirrors attach to support arms using a pivot collar secured by setscrews. Loosening the setscrews allows the whole head assembly to turn on the support arm for initial adjustment. A mounting bolt and washer hold the arm support to the mounting bracket. The arm support can be moved to position the mirror head into or away from the coach body.

The mirror heat switch is located to the left of the driver on the dashboard. This switch must be

activated before the mirror heating element will energize. Once energized, the mirror heating element is kept at a sustained temperature (between 60-80°F) by a thermostat. Refer to wiring diagram annexed in the technical publication box.

CAUTION

Do not attach stick-on type convex mirror accessories to the heated mirror glass. This could impede uniform heat distribution on the mirror surface which could break the mirror.

Mirror Control

The remote control pointer knob(s) for the mirror(s) is (are) mounted on the L.H. side control panel. The harness to the mirror head runs through the arm support. The remote motor is mounted to the mirror head behind the mirror glass.

Turn pointer knob to the left for mirror head adjustments and to the right for convex mirror adjustment, then push down on either of the button's (4) sides to adjust the selected mirror viewing angle.

Disassembly

At end of mirror arm, loosen the setscrews to relieve tension on the ball stud. Remove the ball stud. Remove the ball stud from the arm and gently pull the harness out until the connector is exposed.

Remove the four screws fastening the mirror arm base to the coach. Slide the harness free of the mirror arm base.

Assembly

Attach a stiff wire (snake) to the end of the harness and insert the wire through the mirror arm base and arm, gently pull the harness through the arm and disconnect the "snake".
Connect the mirror head harness. Insert the harness connector back into the mirror arm.
Insert the ball stud into the mirror arm and tighten the socket setscrews.

NOTE

Position the ball cup halves so the joint between them lies on the centerline of the arm. Ensure that the setscrews are not on the joint between the cup halves.

Convex & Flat Mirror Removal

The mirror glass assembly is mounted to the control mechanism or to mirror base with Velcro strips. Remove the mirror glass by gently pulling the lens to release the Velcro. Disconnect the heater grid at the two connectors.
Connect the connectors of the new mirror's grid to the harness. Install the lens by positioning the lens in the mirror frame and pressing to lock the Velcro in place.

9.1.5 Windshield Wipers

Refer to Paragraph "Windshield Wipers and Washers", included in Section 23: Accessories of the Maintenance Manual for complete information on windshield wipers.

9.1.6 Windshield

For the removal or installation of windshield, you will need:

A rope,

A plastic spatula to lift the rubber seal lip,

A metal rod or screwdriver to clean the seal groove,

A filler insertion tool,

Goggles and protective gloves.

- From inside of vehicle, remove center post and interior finishing panels surrounding the windshield. In this case, we are replacing the R.H. side windshield.
- From outside of vehicle, remove filler located inside rubber seal to ease damaged windshield removal.
- From inside of vehicle, push against the top L.H. side corner of windshield for the removal of a R.H. side windshield. If the L.H. side windshield had to be removed, you would have to push against the top R. H. side corner.

NOTE

We are referring to the L.H and R.H. side as viewed from the inside of the vehicle.

- At the same time, another person gradually lifts the rubber lip from the vehicle exterior using a plastic spatula from top to bottom.

- Remove the entire damaged windshield and broken glass if applicable.
- If applicable, using a screwdriver or metal rod, remove black butyl sealant residue from rubber seal then clean with Sika 205.

- **Windshield Installation**

NOTE
Rubber seal may have to be replaced if it was used on several windshield replacements.

- Spray rubber seal with soapy water to ease windshield insertion.
- Insert rope into rubber extrusion leaving enough length at each corner to make a loop. Spray soapy water onto rope and rubber extrusion (Figure 23).
- Slide windshield into rubber seal groove starting with the bottom curved side edge. Using a plastic spatula, move the rubber seal lip aside to gradually insert the windshield into the groove.
- Spray soapy water on a regular basis to ease this operation.
- Using the same type of plastic spatula, repeat the same operation from inside of vehicle, gradually inserting the windshield into the groove.

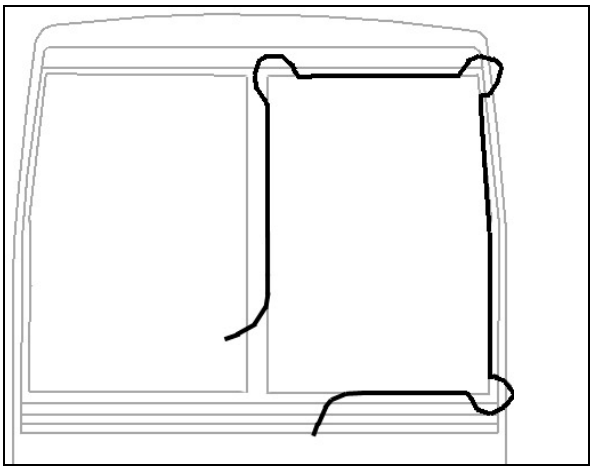

FIGURE 23: WINDSHIELD INSTALLATION USING ROPE

NOTE
Make sure windshield bottom edge is well inserted into the rubber seal groove before proceeding with the sides.

- Then, working from both sides of windshield bottom to top, gradually move the rubber seal lip aside to insert the windshield into the groove. Use also soapy water on the inside of vehicle to insert the windshield into the rubber seal groove.
- Insert the top curved corner then finish with the top of windshield.
- At the top of windshield, clean surface between fiberglass and rubber extrusion using Sika 205.
- Apply Sika 221 black (Figure 24) between fiberglass and rubber extrusion
- Spray filler and rubber seal groove generously with soapy water.
- Using the special filler insertion tool, insert the filler into the rubber seal groove.
- Gradually insert filler into the rubber seal groove ensuring to leave a 2 inch excess length at the filler extremity.
- Every 6 inches or so, it is important to compress the filler due to its tendency to contract during drying process.
- When filler insertion is almost complete, cut filler leaving ¼" of excess length to thwart filler contraction over time then insert filler into groove.

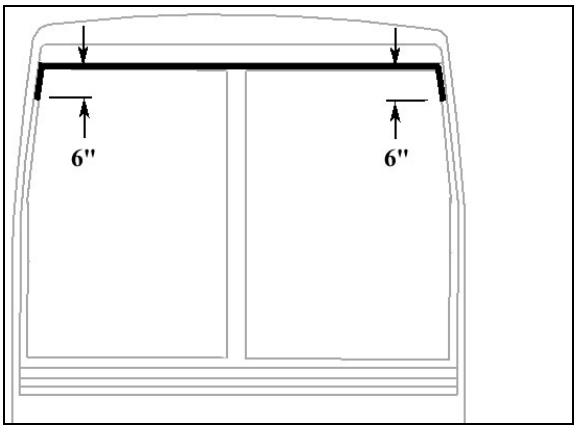

FIGURE 24: APPLICATION 0F SIKA 221 BLACK

- Reinstall center post and interior finishing panels.
- Clean windshield surface of butyl residue.

9.1.7 Entrance Door

An air operated "sedan type" entrance door, with an air door cylinder and damper assembly are

installed under the right hand dash. The opening and closing door speed cycle is adjustable by a damper mounted in parallel with the door cylinder on the door hinge. Door activation is controlled by a panel (Figure 25), located near the defroster and wiper motors. The accessory air reservoir supplies air to this system.

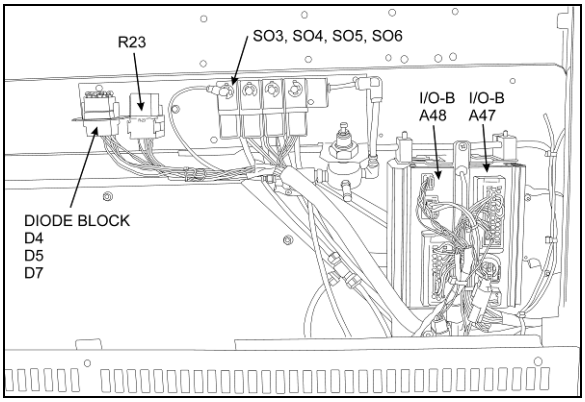

FIGURE 25: ENTRANCE DOOR & WIPER CONTROL PANEL 06619

The door is held in the closed position during coach operation by a two air cylinder locking mechanisms (Figure 27). Air cylinders with return spring in the cylinder body are used. Air cylinders are controlled by an electrically operated solenoid valve energized by a rocker switch located under the right hand dashboard.

To open the door, initial movement of the rocker switch energizes the air lock solenoid valve, venting the door locking cylinders. The return locking spring pulls the door lock away from the latch, unlocking the door. Door movement starts only when pressure in the central air door lock is below 10 psi. The “air cylinder open solenoid valve” opens and allows air to flow to the door cylinder, “the air cylinder close solenoid valve” exhausts air from the rod side of the cylinder.

To close the door, initial movement of the switch energizes the “air cylinder close solenoid valve” and air flows to the cylinder by its rod side port. The “air cylinder open solenoid valve” exhausts air from cylinder. When the reed switch signals the door as closed, the air lock solenoid valve is de-energized and loads the door lock cylinders. The cylinder moves the door lock in a position which engages a latch on the entrance door, holding the door positively closed.

Emergency exit valve, which opens the air valve circuit should be used only in emergencies, or when the door control system does not function properly.

Refer to the air system schematic diagram annexed at the end of section 12, “Brakes” and to page 22 of the wiring diagram.

- **Operation**

The air-operated door is controlled from inside the coach by two push-button switches located on the R.H. dashboard.

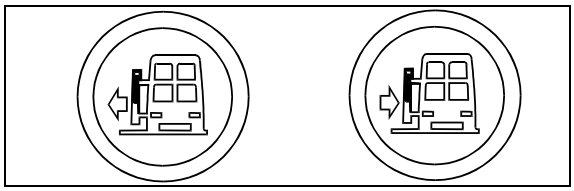

FIGURE 26: ENTRANCE DOOR OPERATING BUTTONS 06464

Opening and closing of the door from outside the coach is accomplished by a momentary toggle switch located under the front R.H. side marker light (Figure 28).

To close the door, the switch must be pushed towards the rear of the coach and held in position until the door has completed its movement.

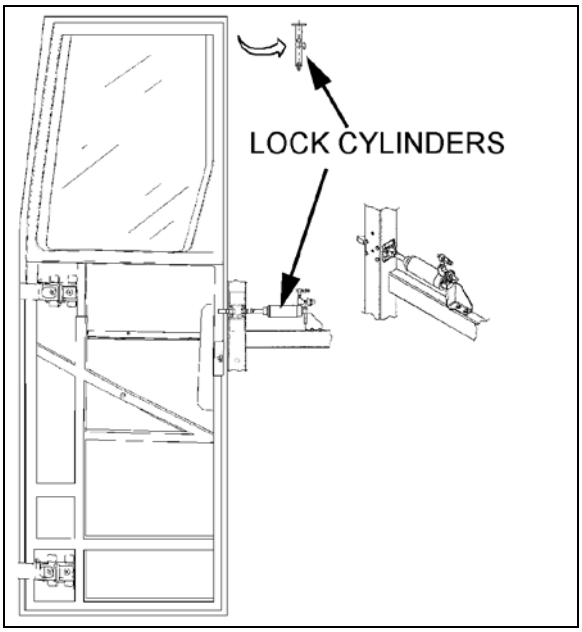

FIGURE 27: COACH ENTRANCE DOOR 18642

To open the door, the switch must be pushed towards the front of the coach and held in position. When the door reaches the fully opened position, the system will keep pressure in the cylinder locking the door in that position.

The door can be stopped in any position by releasing the switch. The door is not locked in position when not fully opened or closed.

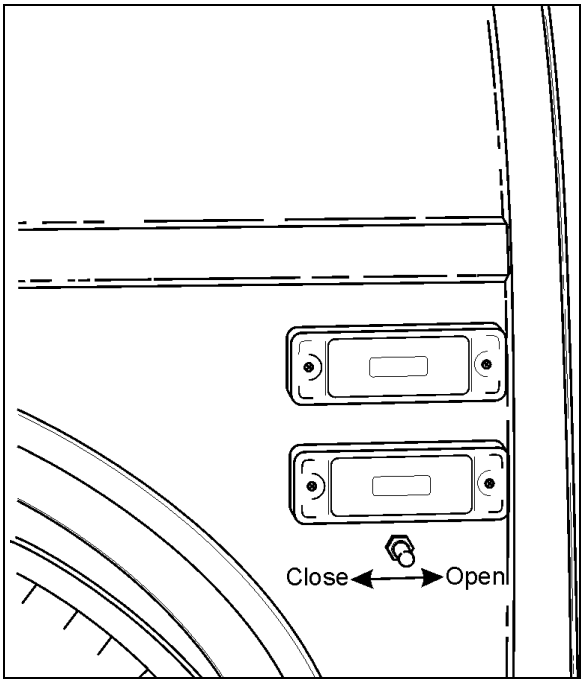

FIGURE 28: ENTRANCE DOOR CONTROL SWITCH 18599

If the door has been locked with the key, a lever on the door can be moved to unlock.

- **Emergency Exit Valves**

From inside the vehicle, an emergency exit valve located near the door on the dash panel, releases the pressure from the lock cylinder. From the exterior, an emergency exit valve located in the front service compartment, also releases the air from the lock cylinder.

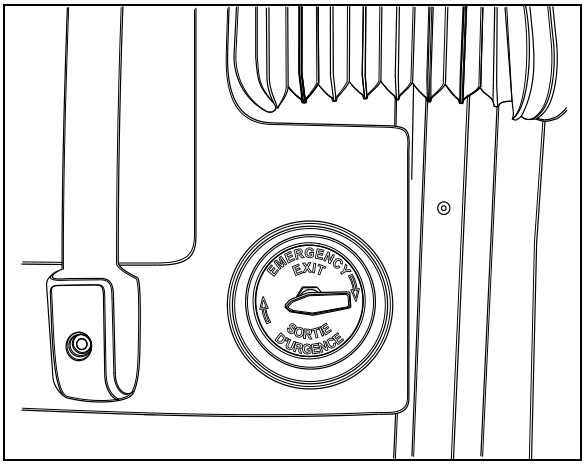

FIGURE 29: INTERIOR UNLATCH AIR VALVE 18330

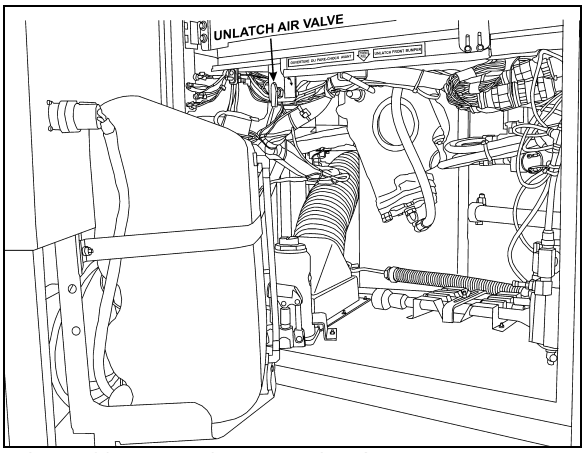

FIGURE 30: EXTERIOR UNLATCHES AIR VALVE 12209

Without Air and/or Without Electricity

If the air pressure drops while the coach has or hasn't any electricity, the spring loaded cylinders will unlatch the door. In such a case, unlock the door by moving the lever on the door or by using the key, then open the door manually.

With Air but Without Electricity

From inside the vehicle, turn the emergency exit valve to the "UNLOCK" position. Move the lever. From the exterior, turn the emergency exit valve to the "UNLOCK" position. Open the door. Close it, lock with the key and reset the outside emergency exit valve to the "NORMAL" position.

- **Door Cycle Speed Adjustment**

To do any adjustment, remove the two panels located next to the door hinge, as well as the door's upper hinge control.

CAUTION

It is important to make sure that damper does not reach end of stroke when door is completely closed or opened. The door cylinder must stop the door on opening. Screw or unscrew rod end to adjust if necessary.

To adjust opening and closing cycle speed on damper (Figure 31):

1. Remove the damper from the vehicle and hold it vertically with the lower eye or pin attachment in a vice. Use clamp plates to prevent damage.
2. Fully close the damper while turning the dust cap or piston rod slowly CCW until it is felt that the cams of the adjusting nut engage in

the recesses of the foot valve assembly (Figure 31).

NOTE
In Figure 31*, if there is an indentation (B) in the dust cap (C) and the cover shows two holes (A), the damper is fitted with a bump rubber (D). If so, fully extend the damper and insert a round bar or screwdriver through the holes. Push the bump rubber down and remove. Remove the split plastic collar (E) (if fitted) from the piston rod.*

3. The damper may have already been adjusted. Therefore check whether the damper is adjusted or not by keeping it closed and gently turning further CCW, counting at the same time the half-turns until a stop is felt. Stop turning and do not force.
4. While keeping the damper closed, make two CW half-turns. In case of prior adjustment, add the number of half-turns previously counted. The total range is about five half-turns. Pull the damper out vertically without turning for at least 3/8" (1cm) to disengage the adjusting mechanism. The dust cap or piston rod may now be turned freely.
5. The damper can now be refitted in the vehicle.

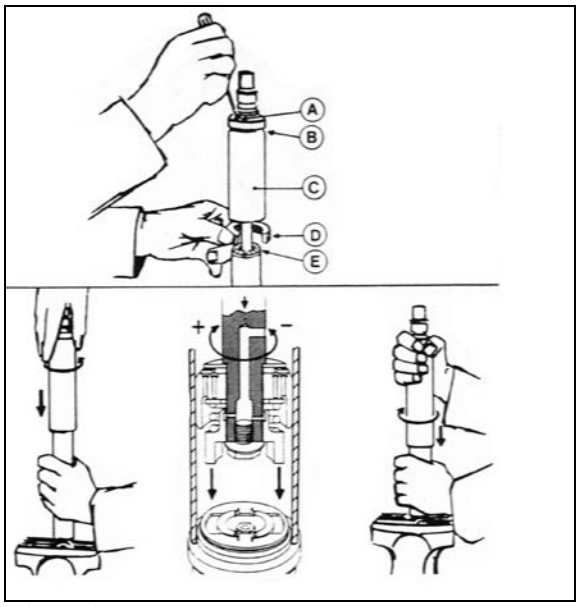

FIGURE 31: DAMPER 18643

NOTE
*Where a bump rubber was installed, refit same inside the dust cap and by fully closing the damper, the rubber will seat again at top of the dust cap. Refit the split plastic collar E (*Figure 31*).*

6. Reinstall panels and entrance door hinge cover.

- **Horizontal And Vertical Adjustment**

Before attempting to correct any door operating problem by adjusting any part of the air cylinder assembly, first perform the following mechanical checks and procedure.

Check around the perimeter of the door for binding. If any binding is found, adjust as follows:

1. Remove the screws and the plastic molding covering each of the hinges.

NOTE
Ask an assistant to help you to perform the following adjustments.

2. Remove the Allen button head screw and the washer retaining the rod end with bearing to the upper hinge. See Figure 32.
3. Support the door with a wooden block and a hydraulic jack.
4. Loosen the horizontal bolts retaining the door to the hinges. Adjust the door horizontally and vertically with the jack. Tighten the bolts.

   TORQUE: 55-65 lb-ft (75-88 Nm)

   Remove the jack and the wooden block.

⚠ **CAUTION**
Make sure the front side door does not interfere with the exterior panel.

5. Pull and fasten the rod end to the hinge with the washer and the button screw.
6. Screw the plastic moldings covering the hinges.

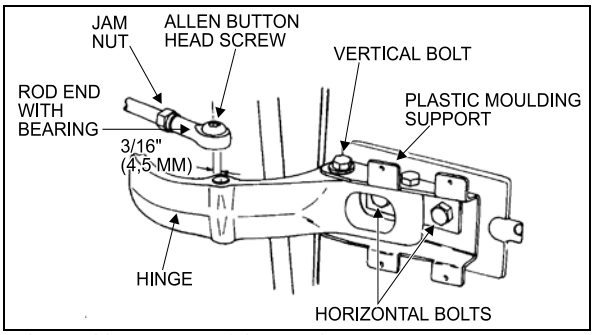

FIGURE 32: UPPER DOOR HINGE 18058

Seal Compression Adjustment

1. Turn the emergency exit valve to the “UNLOCK” position and close the door.
2. From the outside of vehicle, insert a straight edge in the gap along the door outside perimeter. Measure the distance between the door frame and the door outside surface at the door four corners (refer to Figure 33).

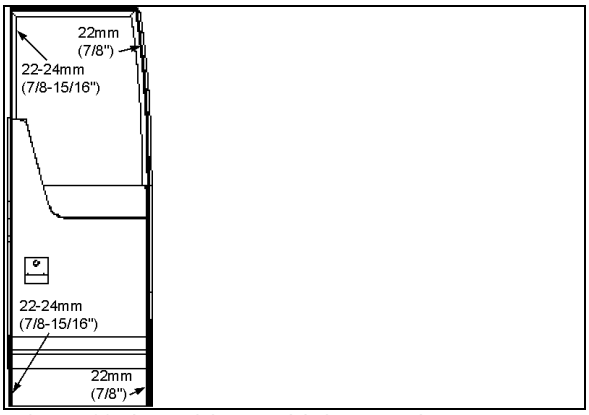

FIGURE 33: SEAL COMPRESSION ADJUSTMENT 18632

NOTE
The front measurements are the most important. If required, ask an assistant to help you to perform the following adjustments.

3. If required loosen the bolts retaining the door to the hinges. Adjust the bolts to obtain the proper seal compression.

Door Seal Replacement

1. Inspect the seal; if cracked or torn, it must be replaced:
2. Remove the old seal and with a sharp edge knife, scrape tape left on the fiberglass door surface.
3. Sand the surface of the door where a new seal will be applied with 240 grit sandpaper.
4. Clean the surface with alcohol or anti-silicone.

WARNING
Wear rubber gloves and do not smoke when cleaning.

5. Peel off protective paper from the seal. Position the seal flush with the top, sides and lower edges of the door.
6. Progress slowly all around the door.
7. Cut the seal and glue both ends with LOCTITE 414 glue.
8. To assure bonding, press a small conical roller on top of the new seal all around 3 times.

- **Troubleshooting**

SYMPTOM	PROBABLE CAUSE	REMEDY
DOOR WILL NOT OPEN FROM EXTERIOR SWITCH.	Manual door locks engaged.	Release manual door locks.
	Upper and lower solenoid locks do not disengage.	Check voltage at solenoid locks when door is open. If the voltage is 24 volts then replace solenoid #641217. Else, check circuit power.
	Relay module do not receive current.	Reset breaker "ON" or check batteries power supply.
	Opening solenoid door does not receive current.	Check voltage at opening solenoid door. If the voltage is 24 volts then replace it. Else replace control relay.
	Switch malfunction.	Replace switch.
DOOR WILL NOT CLOSE FROM EXTERIOR SWITCH.	Switch malfunction.	Replace switch.
	Solenoid failure.	Check voltage at solenoid. If the voltage is 24 volts then replace solenoid. Else replace control relay.
DOOR WILL NOT OPEN FROM INTERIOR SWITCH.	Manual door locks engaged.	Release manual door locks (open position) from vehicle exterior.
	Upper and lower solenoid locks do not disengage.	Check voltage at solenoid locks when door is open. If the voltage is 24 volts then replace solenoid #641217. Else, check circuit power and replace control relay.
	Module relay does not receive electric current.	Reset breaker "ON" or check batteries power supply.
	Door opening solenoid does not receive current.	Check voltage at door opening solenoid. If the voltage is 24 volts then replace it. Else replace control relay.
	Switch malfunction.	Replace switch.
	Upper lock stays engaged	Lubricate upper lock assembly. Check wear and replace parts if necessary.
DOOR WILL NOT CLOSE FROM INTERIOR SWITCH.	Switch malfunction.	Replace switch.
	Door closing solenoid does not receive electric current.	Check voltage at door closing solenoid. If the voltage is 24 volts then replace it. Else replace control relay.
DOOR WILL NOT OPEN AFTER DRAINING AIR FROM SYSTEM BY EMERGENCY VALVE(S).	Manual door locks engaged.	Release manual door locks (open position) from vehicle exterior.
	Damper cylinder blocks the door.	Adjust or replace damper cylinder.
	The upper lock blocks the door.	Adjust upper lock. Lubricate upper latch bolt. Adjust upper latch height.
DOOR LOCKS STAY ENGAGED WHEN DOOR IS OPEN.	Power supply is cut at solenoid.	Place switch in open position.
	Lock solenoid does not disengage.	Check voltage at solenoid lock when door is OPEN. If the voltage is 24 volts then replace solenoid #641217. Else, check circuit power and replace control relay.
DOOR LOCKS DO NOT LOCK WHEN DOOR IS CLOSED.	Emergency valve is open.	Close emergency valve.
	Lock solenoid stays electrified.	Check latch bolt ground on door frame. If needed clean locks for better contact. Check ground circuit.

SYMPTOM	PROBABLE CAUSE	REMEDY
	Lock solenoid works in reverse.	Reverse air hoses at solenoid locks.
	Relay does not function.	Replace relay.

- **Lubrication**

Part	Lubricant	Frequency
▪ Latches ▪ Upper door catch ▪ Door cylinder rod end with bearing grease fitting	*Low temperature grease*	Every six months
▪ Door locking mechanism	*White grease*	Every six months
▪ Key hole ▪ Damper pins ▪ Hinges	*Low viscosity oil*	Every six months

- **Entrance Door Body Panel and Window**

  Window

For the removal of entrance door window, you will need:

Pneumatic hammer tool (Zip Gun);
Razor sharp window scraper;
“Olfa” knife;
Face shield.

- Open entrance door.
- Mark the position of the entrance door window for future reference.
- Remove interior finishing panel.
- From inside of vehicle, cut Sika bead around window perimeter using a “Zip gun” while another person hold the window from the outside.

NOTE
Wear ear plugs during this operation.

- Then, move outside of vehicle and cut Sika bead to free window while somebody else hold the window from the inside.
- Carefully remove window from frame, ask for help if needed.
- Using a razor sharp window scraper, remove Sika bead and double-face self-adhesive tape residue from window frame.
- Clean window using window cleaner.
- Apply Sika Aktivator around window perimeter.
- Clean door frame using anti-silicone.
- Using a scratch pad “Scotch Brite”, scratch the perimeter of the window frame where the adhesive will be applied.
- Clean door frame again using anti-silicone.
- Apply some Sika 206 G+P onto door frame.
- Apply Sika 255 onto door frame structure.

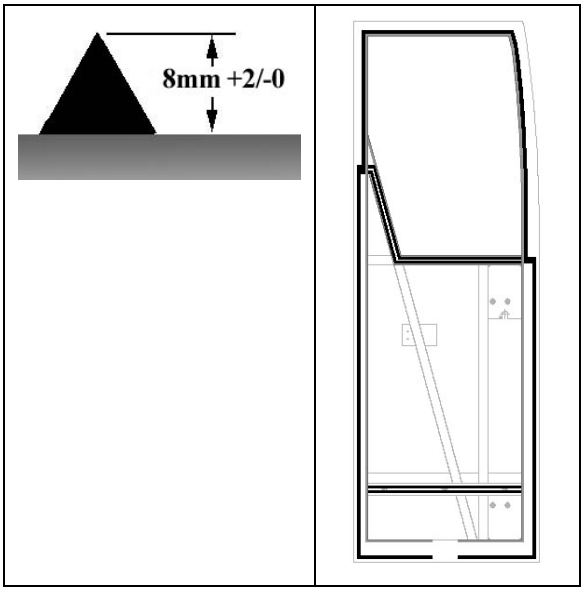

- Apply Sika 255 at junction of frame and window.

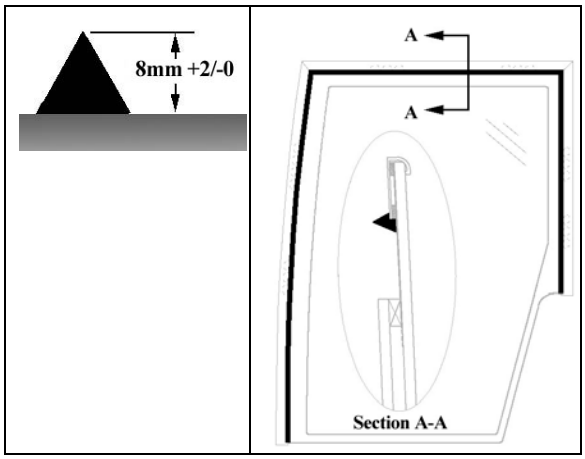

- Install and center window onto door frame. Using your hands, compress window.
- Discard waste according to applicable environmental regulations, use dangerous waste containers.
- Apply masking tape before applying Sika glue to protect paint and adjacent surfaces during surface treatment

Body Panel

For the removal of entrance door body panel, you will need:

Pneumatic hammer tool (Zip Gun);
Razor sharp window scraper;

- Open entrance door.
- Remove interior finishing panels to access rub rail fixing bolts, then remove rub rail.
- Remove door lock and interior lighting.
- Using the "**Zip Gun**", cut Sika bead located ¼ inch (7-8 mm) from each body panel edge.

NOTE
Wear ear plugs during this operation.

- Separate body panel from door.
- Using a razor sharp window scraper, remove from door frame Sika bead and double-face self adhesive tape residue.
- Using a scratch pad "Scotch Brite", scratch the perimeter of the door frame where the adhesive will be applied.
- Clean door frame again using anti-silicone.
- Apply some Sika 206 G+P onto door frame.

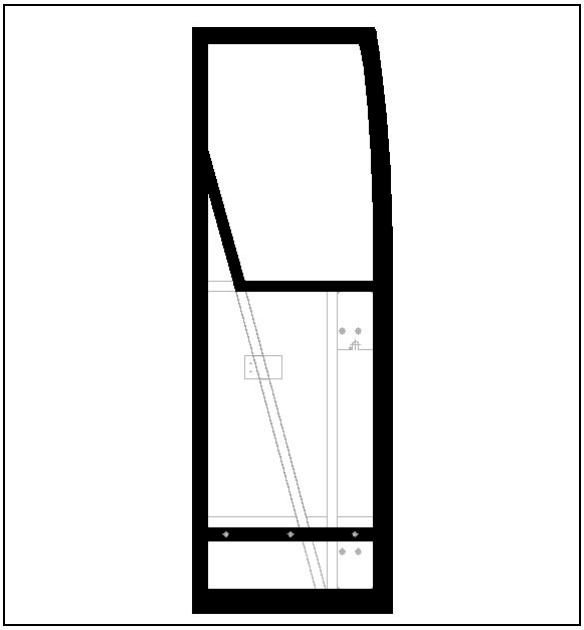

- Using a scratch pad "Scotch Brite", scratch the perimeter of the body panel where the adhesive will be applied.
- Clean body panel using anti-silicone.
- Apply some Sika 206 G+P onto body panel.

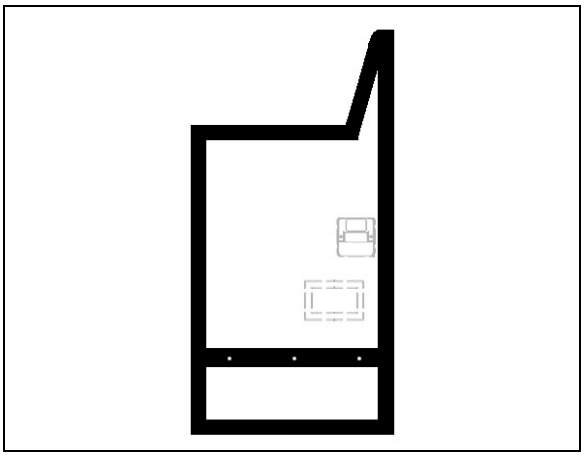

- Apply 1/8 x1/4 double face self-adhesive tape onto door frame.

NOTE
Leave some space at the bottom (50mm) for water dripping

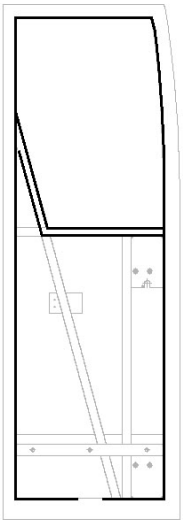

- Apply Sika 255 onto door frame structure.

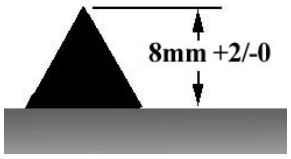

Note: Leave some space at the bottom (50mm) for water dripping.

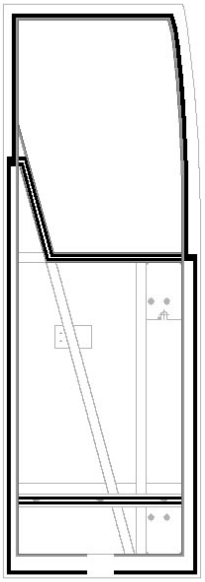

- Install and center fiber glass body panel onto door frame leaving an excess of 3mm all around the frame.

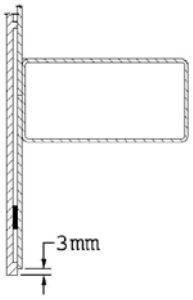

SECTION A-A

- Line-up body panel with window. There must be a gap of 4±2mm between window and body panel.

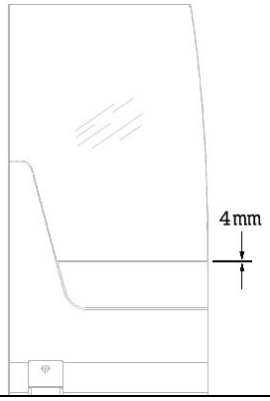

- Apply some masking tape **1mm** from window edge and body panel.
- Fill the gap between window and body panel with Sika 255.
- Smooth down the joint with a plastic scraper then remove masking tape.
- Wet Sika joint using water to accelerate the curing process and put the finishing touch with your finger.

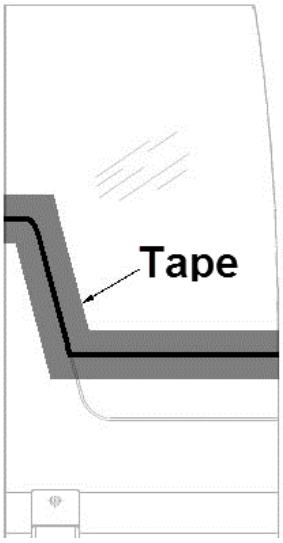

- Discard waste according to applicable environmental regulations, use dangerous waste containers.

9.1.8 Front Electrical & Service Compartment Door Body Panel and Window

Door Body Panel

For the removal of front electrical & service compartment door body panel, you will need:

Pneumatic hammer tool (Zip Gun);

Razor sharp window scraper;

- Open service door.
- Remove interior finishing panels to access rub rail fixing bolts, then remove rub rail.
- Remove windshield washer reservoir, door lock and power window connector.
- Using the "**Zip Gun**", cut Sika bead located ¼ inch (7-8 mm) from each body panel edge.

NOTE
Wear ear plugs during this operation.

- Separate body panel from door.
- Using a razor sharp window scraper, remove from door frame Sika bead and double-face self-adhesive tape residue.
- Clean door frame using anti-silicone.
- Using a scratch pad "Scotch Brite", scratch the perimeter of the door frame where the adhesive will be applied.
- Clean door frame again using anti-silicone.
- Apply some Sika 206 G+P onto door frame.

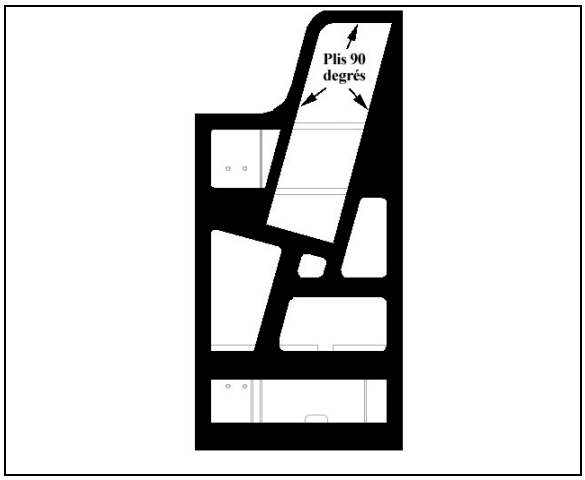

- Prepare new body panel using a scratch pad "Scotch Brite".
- Use a tack cloth to remove any dust or residue from the body panel surface.
- Clean body panel using anti-silicone.
- Apply some Sika 206 G+P onto body panel.

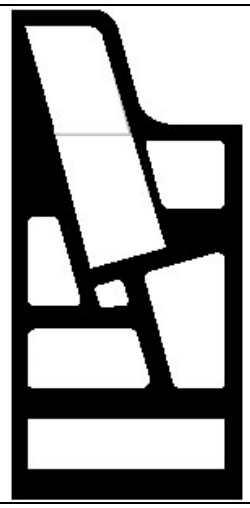

➢ Apply an even coat of Sika 255 onto the door frame.

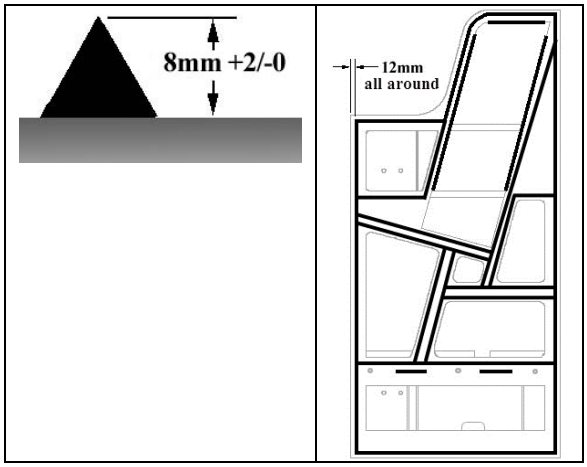

➢ Position body panel onto door frame and compress with your hands. Use a ruler.

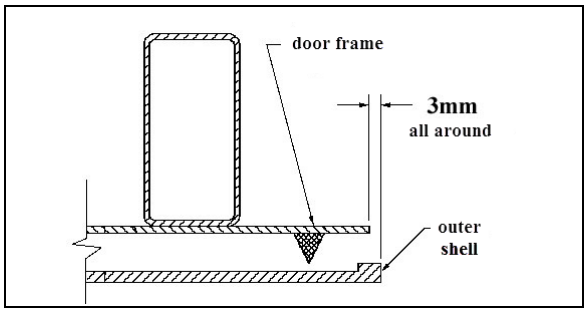

- Check body panel flatness using a 2-foot ruler (must be within 2mm).

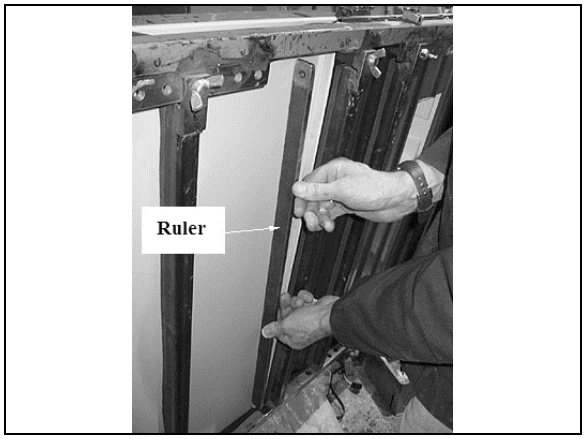

- Check proper power window sliding inside window frame.
- If applicable, remove excess of Sika adhesive all around door frame using Sika 208.
- From the inside of the door, apply some Sika 221 between door body panel and frame and on welding spots as per figure.

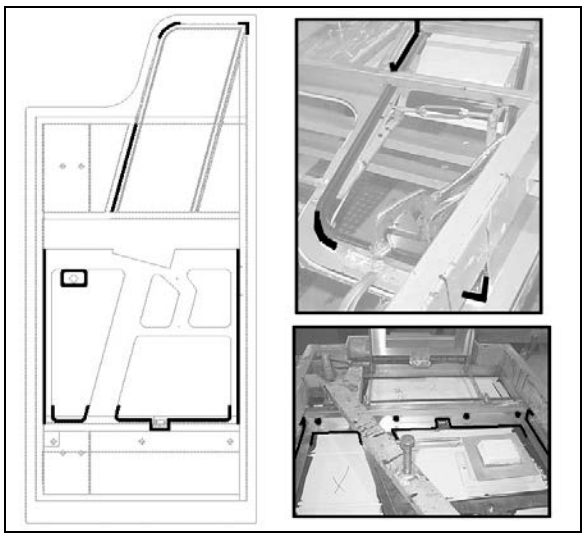

- Apply some #680066 glue inside fiber glass groove and fix power window wiper.

NOTE
Anti-friction side must be on glass side.

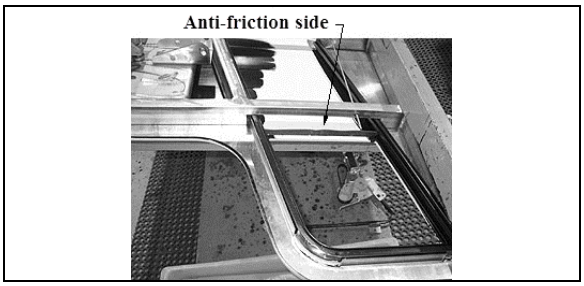

- From inside the door, apply some Sika 252 at the corners of window wiper.

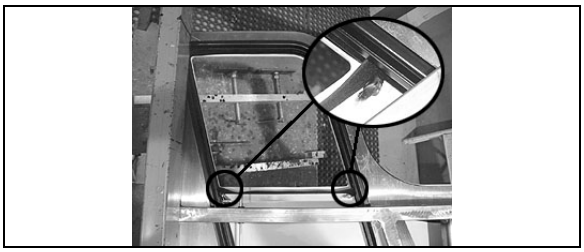

- Apply some #680066 glue inside finishing panel groove and fix power window wiper.

NOTE
Anti-friction side must be on glass side.

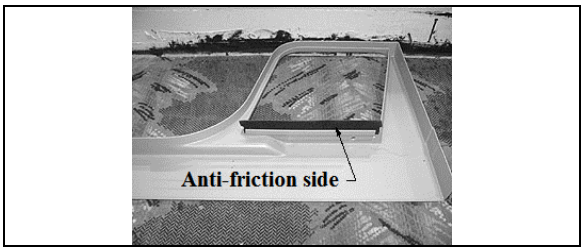

- Discard waste according to applicable environmental regulations, use dangerous waste containers.

Electrical Power Window

- Insert 2 seals in the window frame.
- Apply some #680066 glue at the intersection of the 2 seals and also sparingly in order to fix the seal to the window frame.

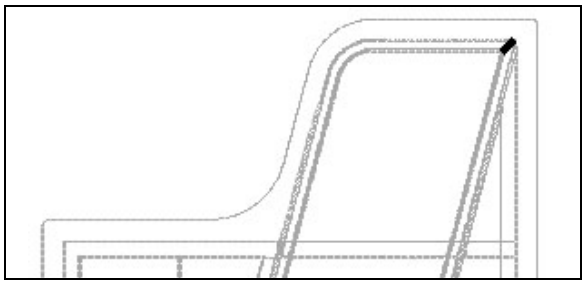

- Clean window using window cleaner.
- Insert window into frame.
- Secure window pane to raising mechanism.

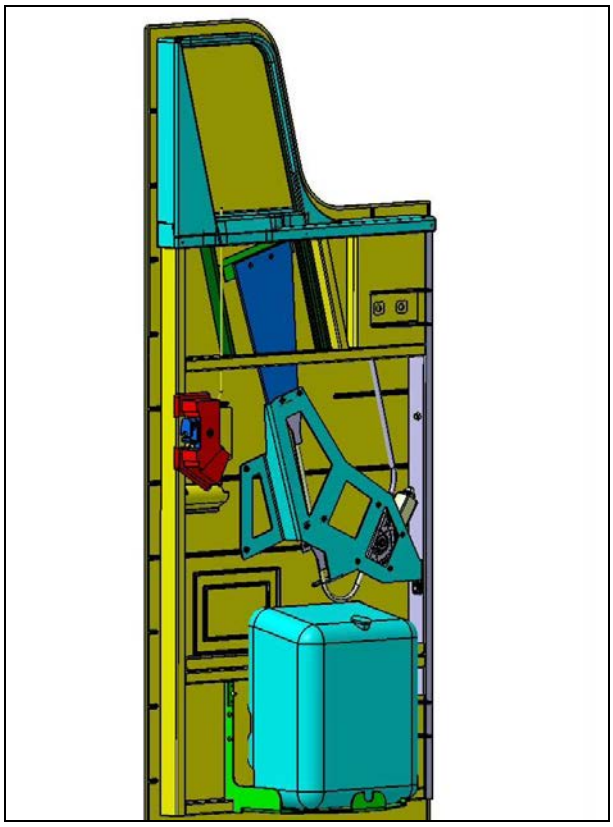

- Adjust window travel (6±3mm above window wiper).

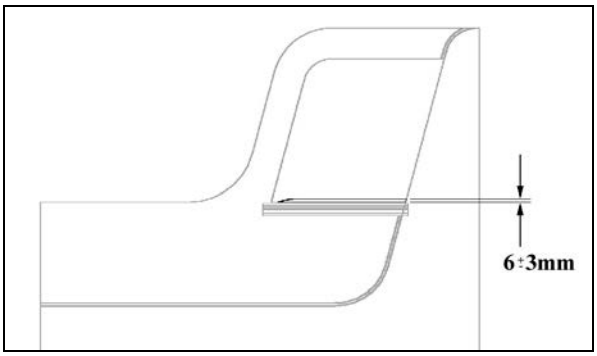

Driver's Window Gutter

- Dry fit the gutter on the vehicle. If required, straighten up gutter using a hammer and a wooden block.

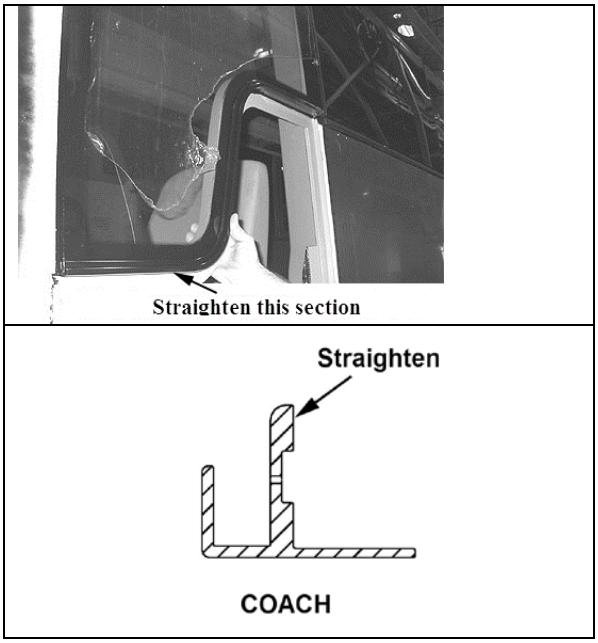

- Apply anti-silicone inside right angle.

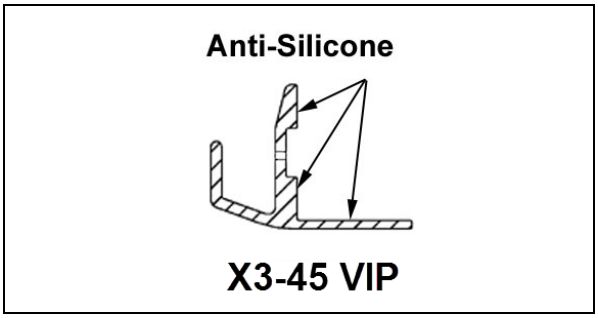

- Apply Sika 205 inside right angle.

- Apply 1/16 x1/4 double face self-adhesive tape onto gutter.

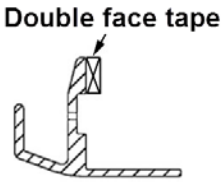

- Peel the back from double face self-adhesive tape.
- Apply Sika 252 inside right angle.

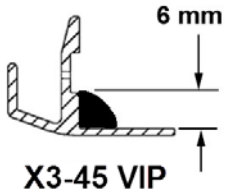

- If applicable, remove plastic film at the bottom of driver's window.
- Remove excess of Sika underneath driver's window.
- Clean bottom of driver's window using window cleaner.
- Apply Sika Aktivator at the bottom of driver's window.
- Install gutter under driver's window then compress in order to fix double face self-adhesive tape.
- Install 3 clamps and allow curing for 4 hours.

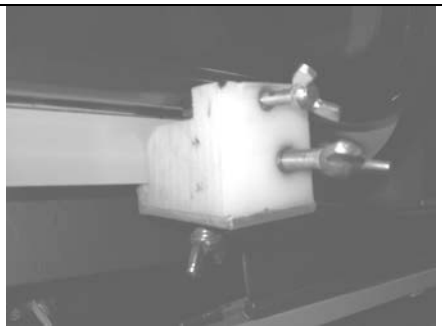

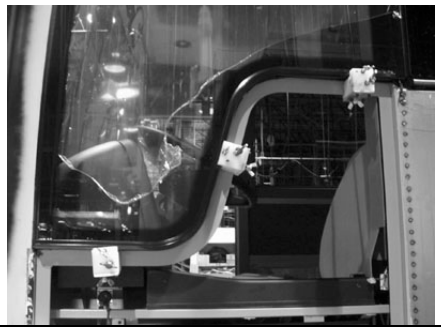

- **Upper Lateral Window**

For the removal of driver's window or upper lateral window, you will need:

Pneumatic hammer tool (Zip Gun);
Razor sharp window scraper;
"Olfa" knife;
Face shield.

- In the case of driver's window only, open front service compartment door.
- Mark the position of the driver's window for future reference.
- From inside of vehicle, cut Sika bead around window perimeter using a "Zip gun" while another person hold the window from the outside.

NOTE
Wear ear plugs during this operation.

- Then, move outside of vehicle and cut Sika bead to free window while somebody else hold the window from the inside.
- Carefully remove window from frame, ask for help if needed.
- Using a razor sharp window scraper, remove from window frame Sika bead and double-face self adhesive tape residue.
- First of all, check Sika 205 cleaner expiration date.

- Before applying Sika cleaner, fold “Chix” cloth twice for proper width.
- Apply an even coat onto the inside of window frame and allow drying for 2 minutes (maximum 2 hours).
- Discard waste according to applicable environmental regulations, use dangerous waste containers.
- Apply masking tape before applying Sika glue to protect paint and adjacent window during surface treatment.

For gluing of upper lateral window, refer to procedure **SAV00632**.

- **Glued Molding Installation**
  - Clean window gluing area using window cleaner.
  - Apply Sika Aktivator onto gluing area making sure to avoid Sika adhesive if it is not cured yet.

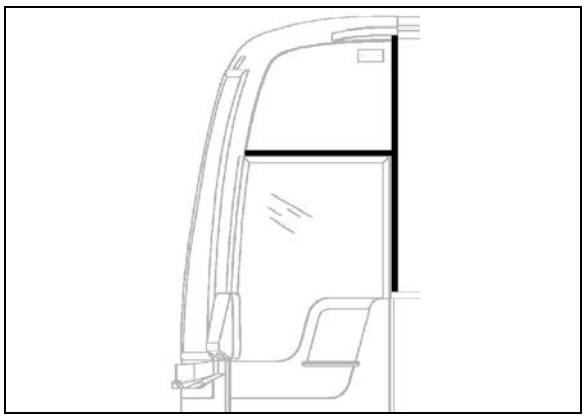

  - Apply anti-silicone onto molding.
  - Apply Sika 205.

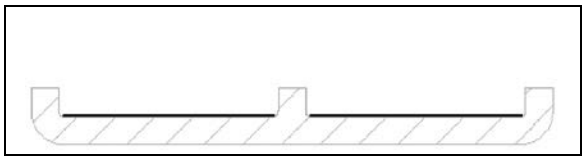

  - Clean gutter using anti-silicone.

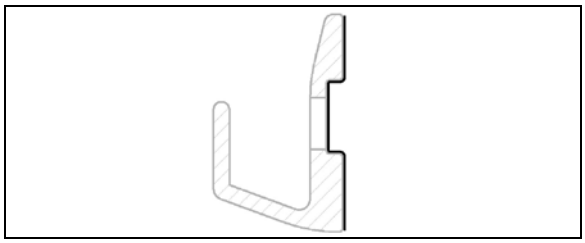

  - To seal screw holes, remove screw, apply Sika 205 inside the hole then apply Sika 252.

  - Apply a double-face self adhesive tape 1/8 by ¼ inch inside the molding onto the whole length.

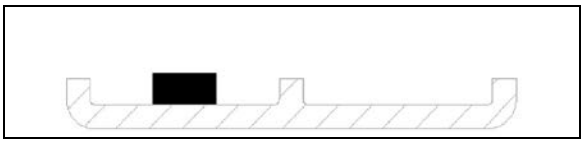

  - Apply a double-face self adhesive tape 1/32 by ¼ inch onto the whole length of the gutter.

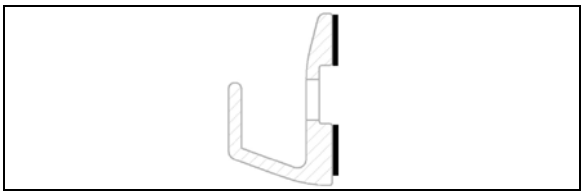

  - Apply Sika 252 inside the moldings onto the whole length.

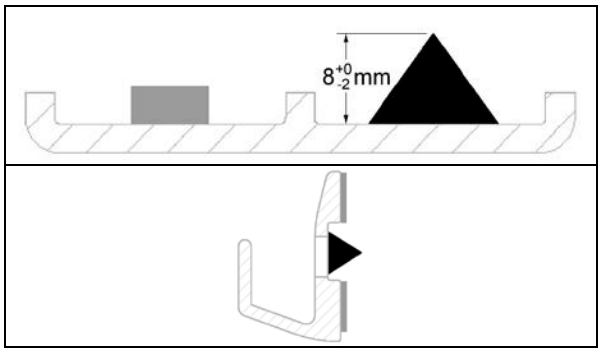

  - Position and fix vertical molding. Lean vertical molding against lateral molding. Make sure vertical molding lines up with structural tubing.

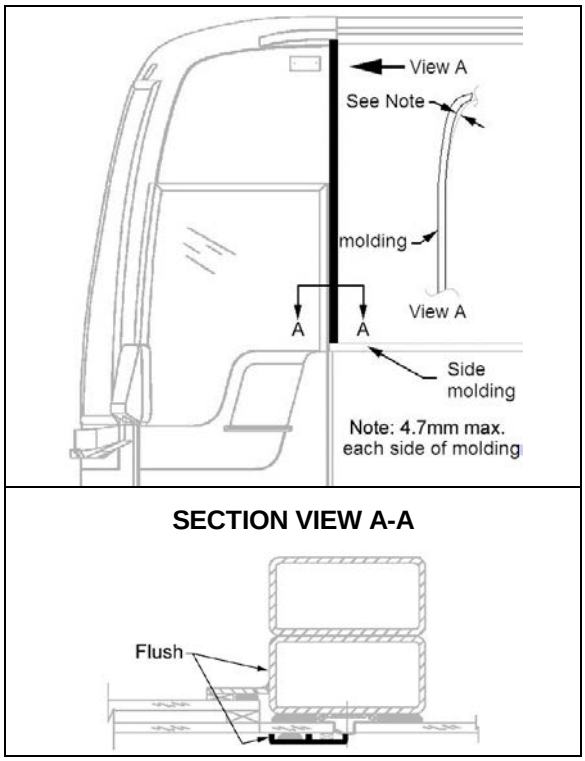

- Position and fix horizontal molding (gutter). Lean gutter against vertical molding. Position gutter just above Sika finishing joint.

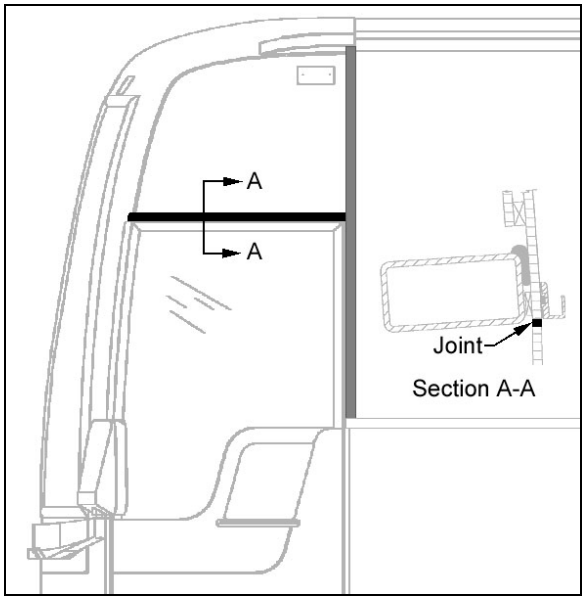

- Apply masking tape on each side of vertical molding. Apply Sika 252 to fill the gap between molding and windows.
- Smooth down the joint with finger.
- If required, clean surfaces using Sika 208.

9.1.9 Front Cap

The fiberglass front cap does not need any maintenance except painting as needed. It is held in place with adhesive. If ever it has to be replaced, make an appointment at a Prevost service center near you. For minor damages, refer to paragraph 7 “COMMON FIBERGLASS REPAIR PROCEDURE” and paragraph 8 “COMMON PAINTING PROCEDURE”.

9.2 ZONE 2

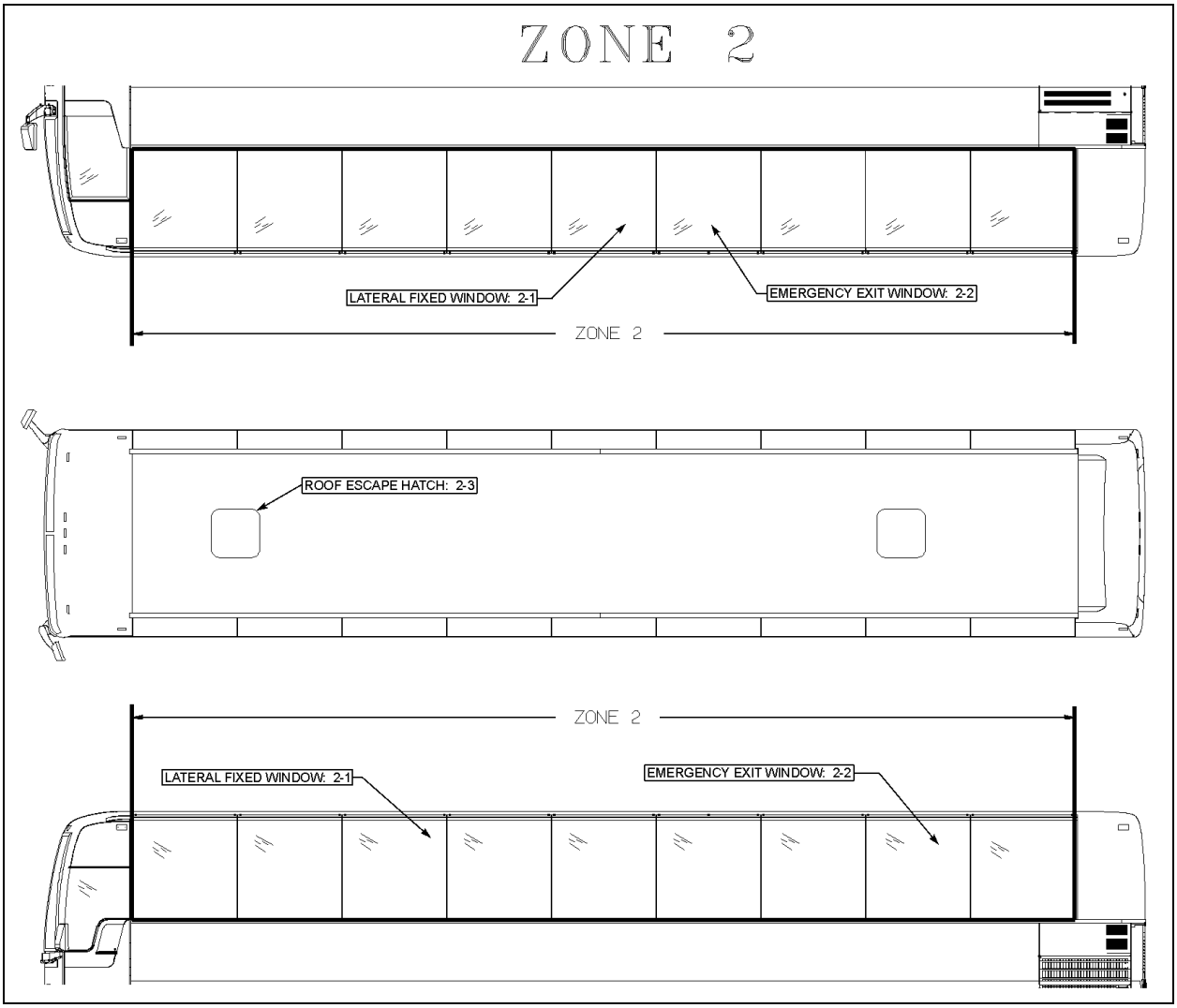

FIGURE 34: ZONE 2 18625

9.2.1 Lateral Fixed Window

Nine passenger side windows are provided on each side on X3-45. They are made of fixed, single or double-glazed, heat absorbing AS-3 glass. Windows are mounted in painted aluminum extrusions, which hold the glass in place from the top rail of the coach. The extrusion also serves as a hinge to allow the window to swing open when needed. The single-glazed windows are made of tinted tempered safety glass, while the double-glazed windows are made of tinted tempered safety glass outside and clear tempered glass inside.

For the removal or installation of a fixed side window, you will need:

Hammer or drill equipped with a sharp pointed rod into which a small hole was drilled;

Braided windshield wire and a pair of handles;

Gloves, goggles or face shield.

- **Fixed Window Removal**

  Method A

  - Apply a sticky plastic film onto window outside surface (thermos) and break

window. For single pane, apply a sticky plastic film on both sides of window.

Method B

- Using a drill equipped with the special sharp pointed rod, drill through the window seal into one of the bottom corners, from a 30º angle with reference to the vehicle.
- This procedure requires accuracy and it is possible not to succeed on the first attempt. From the inside of vehicle, a second person ensures the rod passes through.
- Remove the rod, thread the wire into the small hole. Reinsert the rod and the wire into the hole far enough so that the person inside the vehicle can pull the rod using a pair of pliers.
- Attach the wire ends to the specially designed handles.
- Pull in turn from the inside and the outside of vehicle to gradually cut the Sika bead on the window perimeter.
- When you reach top corner, detach wire from the outside handle, secure it to a fish wire or rod and thread it underneath the aluminum molding behind the rivets.
- Detach wire from fish wire and continue cutting using the handle.
- Cut Sika bead until you come back to starting point, then you can remove the window by carefully pushing it out from the inside of vehicle.

- **Preparation of Structure and Installation of Window**

Preparation of Structure

- Remove old Sika adhesive.
- If primer was removed at the same time than Sika, perform the following steps:
  - Clean using anti-silicone.
  - Remove from structure old primer using a sander (120-150 grit).
  - Clean again using anti-silicone.
  - Apply 206 G+P primer.
- Reactivate 206 G+P primer.

Installation of Window

- Use window cleaner around window interior perimeter and edges to remove any oily film while inspecting for damages.
- Apply Sika Aktivator.
- Using a triangular nozzle (20mm X 10mm), apply Sika Ultrafast II onto structure.

NOTE
You only have 8 minutes to install window once the SIKA ULTRAFAST II product is applied.

- Install window.

⚠ **CAUTION**
To prevent damaging the Sika joint, do not raise the window once it as touched the bead.

- Before compressing window against Sika joint, install two stops into the aluminum extrusion one inch from each window edge.

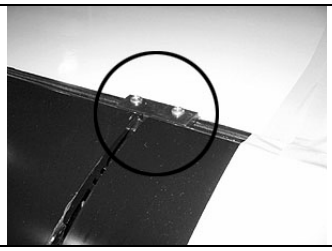

- Verify window alignment with reference to adjacent surfaces.
- Vehicle must remain stationary for 30 minutes at a temperature above 23°C.

9.2.2 Emergency Exit Windows

Three of the windows on curb side of the X3-45 serve as emergency exits, while there are four on driver's side. See Figure 35. Except for the top window side, the three other glass sides are unprotected, which causes the workers to be exceptionally careful when manipulating or installing such windows.

In addition, when it becomes necessary to lay down the unprotected edges of the glass window, never use a steel or concrete floor as support. It is recommended to use a wooden support, or even better, a padded surface.

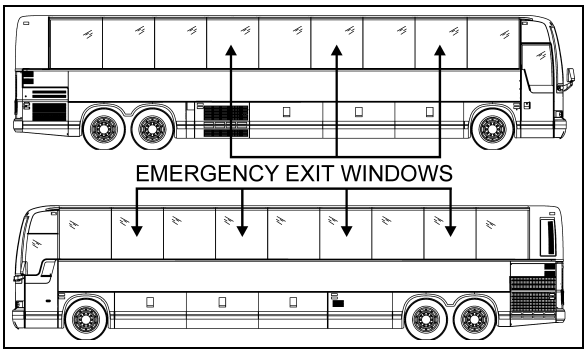

FIGURE 35: X3-45 COACH 18617

An emergency exit window can be opened by pulling the lower part of the release bar to disengage the safety latches, and then by pushing out the window frame (Figure 36).

Emergency operating instruction decals are affixed under each emergency exit window. To close the window, pull back the window and push down the release bar.

- **Emergency Exit Release Bar**

The emergency exit release bar system is generally maintenance free. It has been designed to answer the twenty pound resistance criteria for opening the emergency window. If this handle should be replaced:

1. Remove the screws and bolts securing it to the emergency exit window;
2. Install a new release bar, reverse the procedure.

NOTE
Check the legal requirement of twenty pound maximum resistance to be sure to comply with FMVSS No 217.

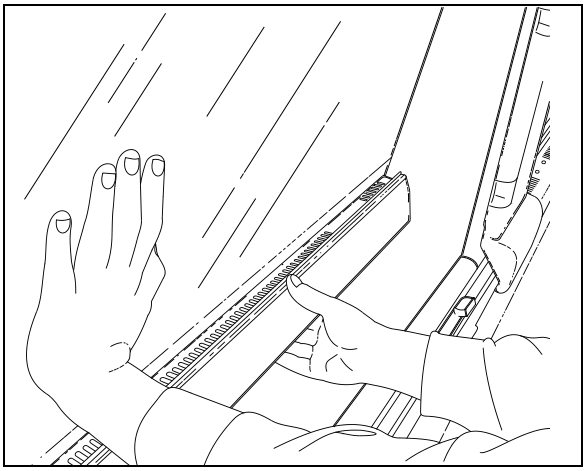

FIGURE 36: EMERGENCY EXIT WINDOW 18008

- **Emergency Exit Window Adjustment**

Emergency exit windows should be checked periodically for easy opening and closing. Pulling the lower part of the release bar with both hands placed near the safety latches should disengage both locks on the window simultaneously. The tension required to release the window should not exceed twenty pounds (9 kg) of force.

The release bar mechanism itself has been designed such as no adjustments are necessary.

If too much effort is required to disengage the locks when pulling the release bar or if the window doesn't close tightly or rattles, check for interference by foreign objects or nearby parts into mechanism, such as the microswitch, rubber seal, wires, etc. Correct situation immediately.

NOTE
Tangs on the lock must be in a horizontal position.

- **Emergency Exit Window Replacement**

1. Lift the bar release system;
2. Remove the stop blocks from the top exterior of the window.
3. Push the glass window out ninety degrees (90°).

WARNING
The window may fall out.

4. The window is free and can be unhooked.

Reverse the procedure to install a new emergency exit window.

9.2.3 Roof Escape Hatch

The vehicle can be equipped with one or two escape hatches. The escape hatch is designed to provide years of reliable service with a minimum of maintenance. All components are rust proof, and moving parts are Teflon coated to eliminate need for lubrication. Should water infiltrate the vehicle from the escape hatch, refer to the heading "Sealing" in this paragraph for procedures on how to seal this area.

CAUTION

Use of lubricants, paints, or other coatings such as graffiti deterring sprays is not recommended.

Suggested maintenance includes periodic inspection of fasteners for evidence of loosening due to tampering, and regular cleaning with mild soap and water.

Although there are other cleaning solutions available, some contain solvents and other chemicals that can attack the high strength materials used in the production of the escape hatch.

CAUTION

Ensure that cleaning solutions are compatible with the materials used on the escape hatch.

Graffiti removing cleaners often contain acetone, ether, lacquer thinner or other solvents known to destroy the high strength properties of many plastics. Use of these cleaners must be avoided. Graffiti-resisting coatings often leave a sticky residue that interferes with smooth up/down movement of the hatch mechanism. Some of these coatings also contain solvents that will reduce the strength of certain components.

CAUTION

Use of these coatings is at considerable risk and should be avoided.

- **Repair**

All components used in the production of the escape hatch are available as service parts, except for one hinge that represents a possible hazard when improperly reattached to a hidden tapping plate, itself often damaged whenever the hinge is damaged. The tapping plate is permanently laminated between the inner and outer cover assemblies, and it cannot be inspected or replaced. It is therefore necessary to replace the entire assembly following damage to the hinge. See Figure 37.

CAUTION

Hinge assembly is critical and hinge should never be removed from cover assembly. Fasteners used in this assembly are special and have critical torque requirements and tamper-resistant heads to discourage tampering.

- **Sealing**

1. Open and tilt up the escape hatch cover.
2. Join the 2 ends of the rubber seal.

CAUTION

Seal joint should be toward rear of vehicle.

3. Apply rubber adhesive CA-40 (Prevost # 681285) in the gap between the seal ends.
4. Apply Sikaflex 221 sealant (Prevost # 680532) along the outline of the escape hatch on the roof of vehicle.

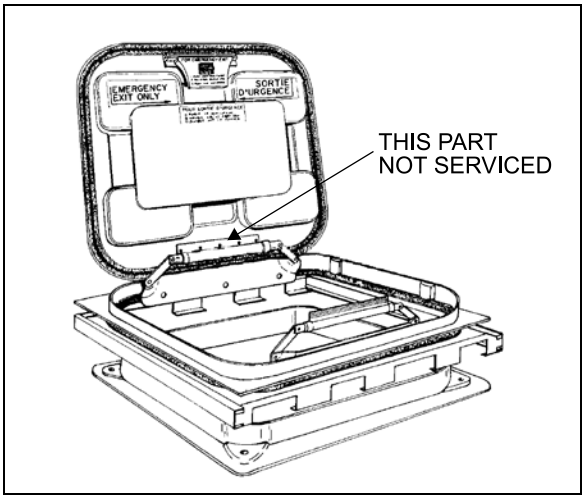

FIGURE 37: ESCAPE HATCH 18104

- **Escape Hatch Panel Assembly**

The frame of the escape hatch is riveted to the roof of the vehicle. The escape hatch panel assembly can be replaced as a unit and a new panel assembly installed in the existing frame. To remove the panel assembly, remove the 4 bolts fastening the 2 hinges to the escape hatch frame and retain the 4 flat washers. Reinstall the panel assembly by fastening the 2 hinges with the 4 bolts and flat washers removed earlier.

CAUTION

When installing, roof escape hatch's hinge must be toward the front of vehicle, to prevent the hatch from being ripped out if accidentally opened while vehicle is running.

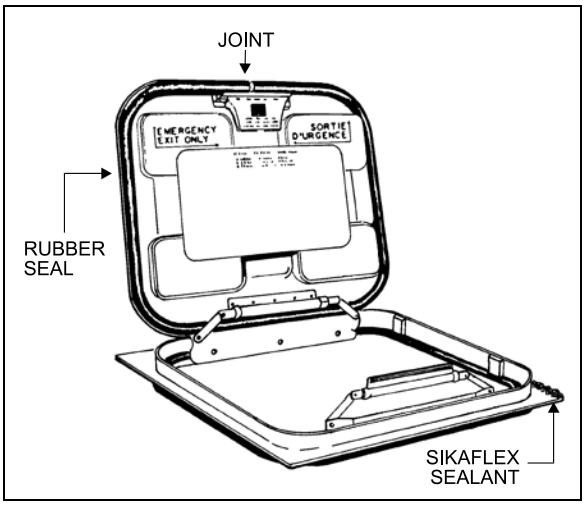

FIGURE 38: ESCAPE HATCH 18105

- **Escape Hatch Frame**

When necessary, the escape hatch frame can be removed and replaced in the following way:

1. Support the frame from inside the vehicle.
2. Remove rivets.
3. Cut the rubber seal with a sharp edge knife and remove the hatch frame.
4. On vehicle top, using the knife, remove as much as possible the remaining rubber seal.
5. Drill holes (if needed) in the new metal frame.
6. Clean both vehicle top and new hatch frame with SIKA 205.
7. Apply rubber adhesive SIKA 221 under the hatch frame surface.
8. Install the frame in place and fix it with rivets.
9. Remove excess adhesive and clean all around.

9.3 ZONE 3

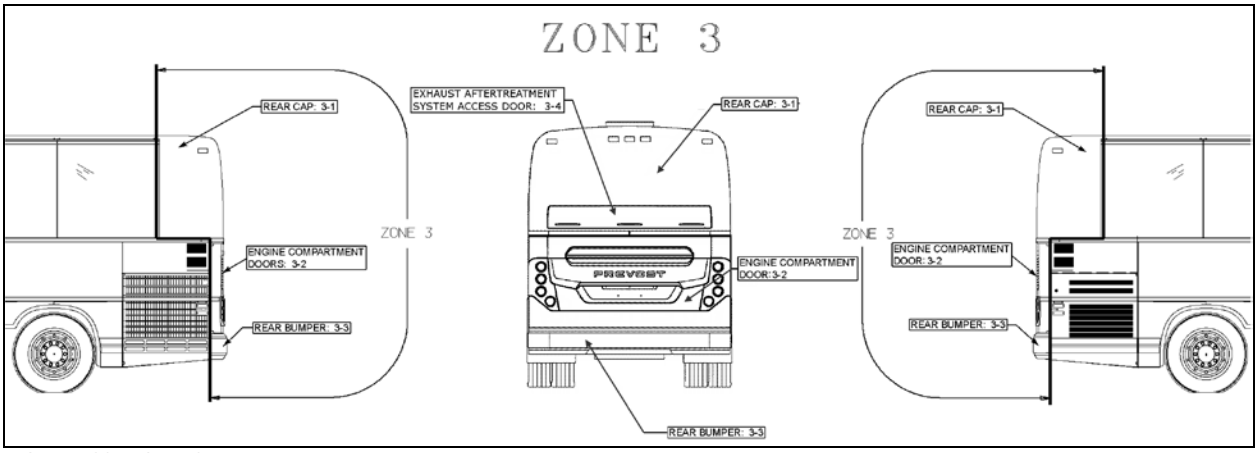

FIGURE 39: ZONE 3 18626

9.3.1 Rear Cap

The fiberglass rear cap does not need any maintenance except painting as needed. It is held in place with adhesive. If ever it has to be replaced, take an appointment at a Prevost service center near you. For minor damages, refer to Paragraph 4 "Common Fiberglass Repair Procedure" and Paragraph 5 "Common Painting Procedure".

1.1.1 Engine Compartment Door

The engine compartment door may be adjusted for proper fit by untightening support bolts:

NOTE
*Consult the "BODY PANEL AND WINDOW SPACING DIAGRAM" for proper door gaps adjustment. (*Figure 77*)*

1. To adjust the door VERTICAL position, loosen the bolts (4 on each side) holding the door supporting arm and gas springs bracket to the *vehicle structure* (Figure 40).
2. To adjust the door LATERAL position, loosen the bolts (3 on each side) holding the door supporting arm and gas springs bracket to the *door* (Figure 40).
3. Adjust the door FORE & AFT position by screwing/unscrewing the rubber door stops on each side of the door opening (Figure 40).
4. Check that the door swings freely and close properly. *It may be necessary to adjust the door latch to get proper fit and operation*.

To adjust the latch mechanism and the striker pin:

1. Open the door to access the striker pin.
2. *Slightly* loosen the striker pin.
3. Using a hammer, adjust the striker pin to center it in the door latch mechanism.
4. Tighten the striker pin.
5. Check door fit and operation.

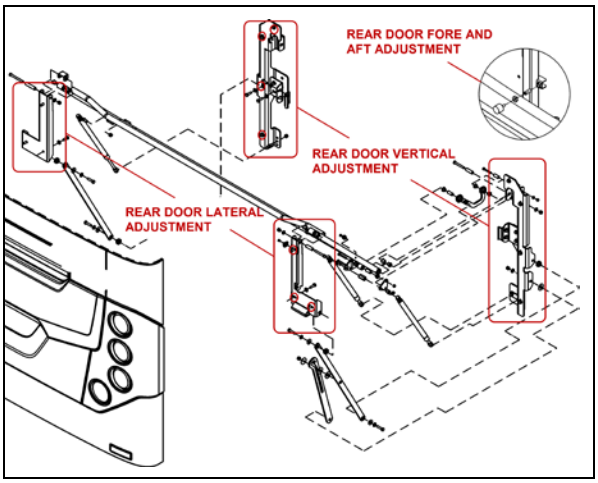

FIGURE 40: ENGINE COMPARTMENT DOOR 18633_1

9.3.2 Rear Bumper

Remove three bolts on each side holding bumper to vehicle and remove bumper.

To install bumper, reverse the procedure.

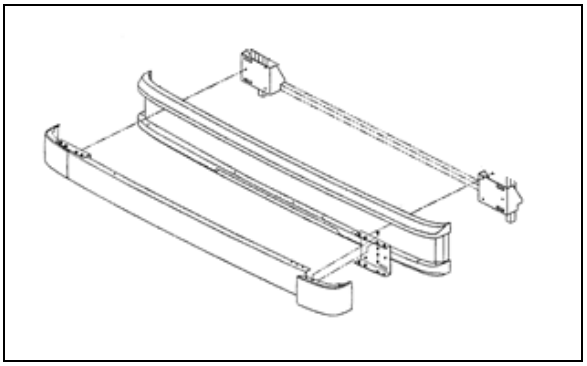

FIGURE 41: REAR BUMPER 18634

9.3.3 Exhaust Aftertreatment System Access Door

1. Open exhaust aftertreatment system access door.
2. Loosen the screws holding the panel to hinge assembly.
3. Adjust the door position according to distance required between exterior finishing parts.
4. Tighten the nuts.
5. Check that the door swings freely and closes properly.

9.4 ZONE 4

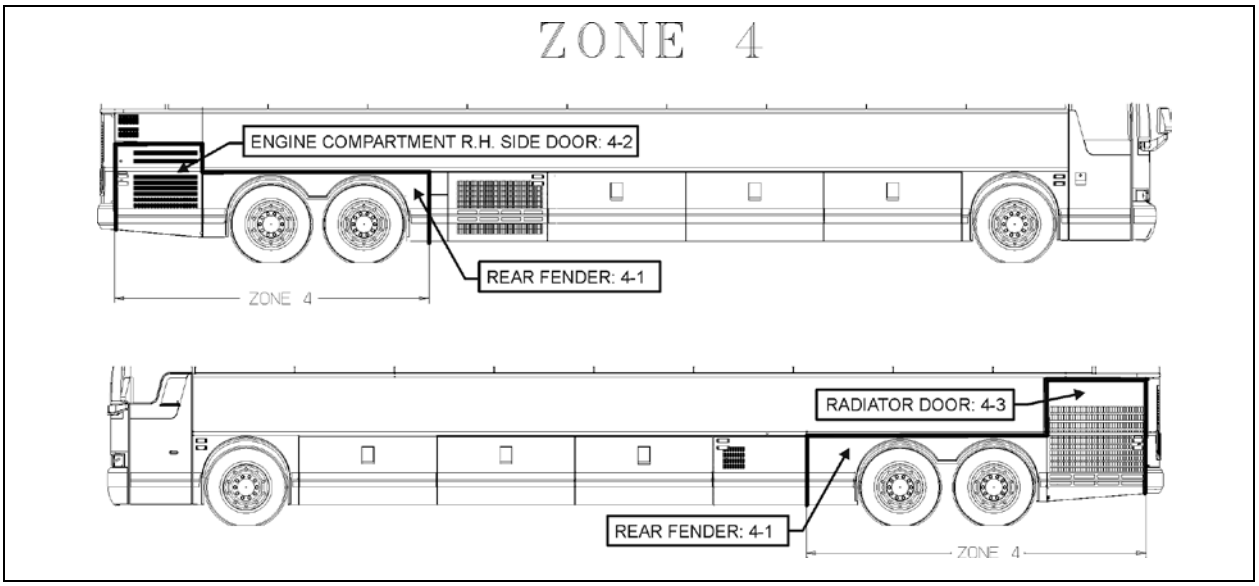

FIGURE 42: ZONE 4 **18627**

9.4.1 Rear Fender

On the "X3" series vehicle, rear fenders are hinged for maintenance on brakes and suspension. Each rear fender panel has two mechanical spring loaded holding devices fixing it to the vehicle's structure. Push the spring type rod sideways to disengage the lock.

9.4.2 Engine R. H. Side Access Door

Engine R. H. side access door may be adjusted for proper fit. To do so, follow the steps below:

1. To adjust the position, the door must be free to move without any restriction. For this reason, remove pin E and strike plate C (Figure 43).

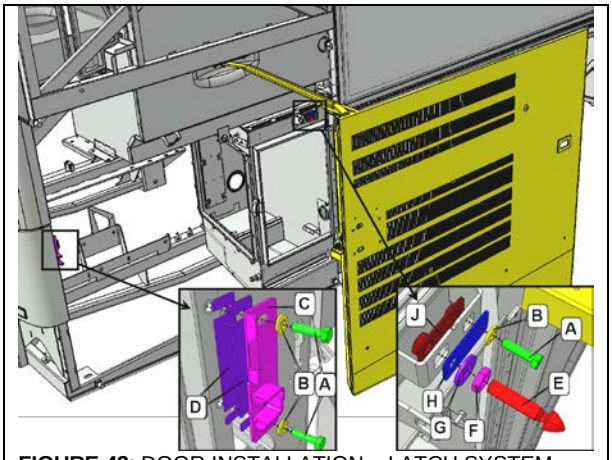

FIGURE 43: DOOR INSTALLATION – LATCH SYSTEM

A - BOLT
B - BELLEVILLE WASHER
C - STRIKE PLATE
D - SPACER
E - PIN
F – LOCK NUT
G - BELLEVILLE WASHER
H - PLATE

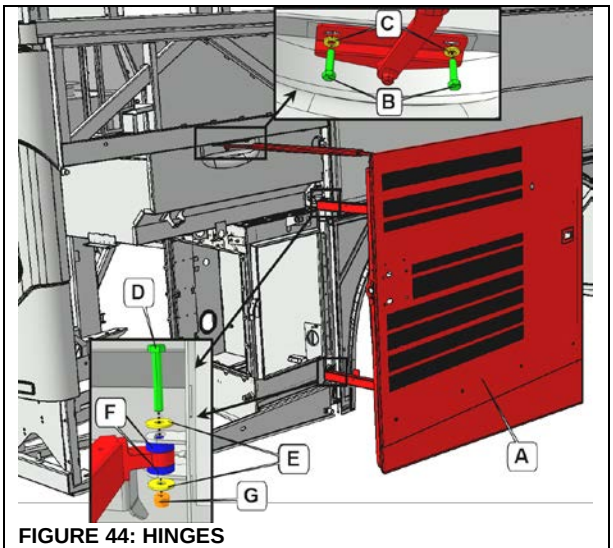

FIGURE 44: HINGES

A – ENGINE R.H. SIDE ACCESS DOOR
B - BOLT
C - BELLEVILLE WASHER
D - BOLT
E - WASHER
F –SPACER
G - NUT

Vertical adjustment

2. Make sure bolts A are tight (**FIGURE 45**).

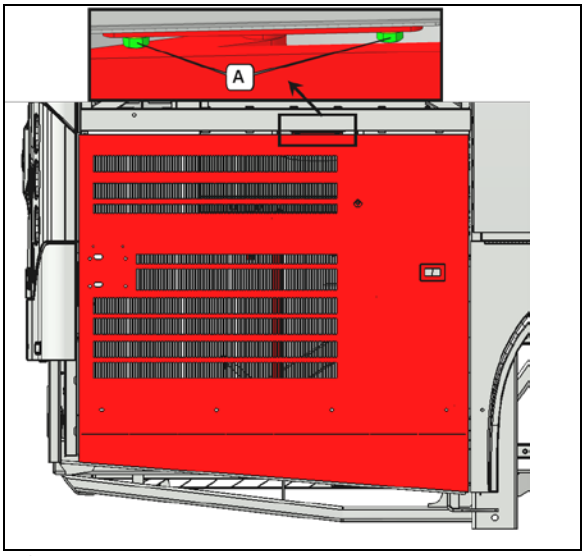

FIGURE 45

3. Compare the lower edge of the door level with the lower edge of the rear fender. The door should be flush with the fender (FIGURE 46).

   Tolerance is ± 3/32" (± 2mm)

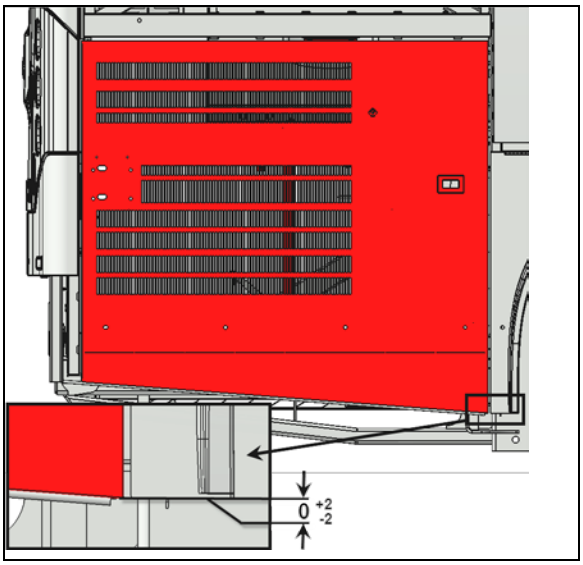

FIGURE 46

4. If the vertical position is out of tolerance, rotate the door using the adjustment provided on the inner side of the door, at the attachment points between the arm and the door (**FIGURE 47**).

   Perform the adjustment with the lower adjustment point preferably.

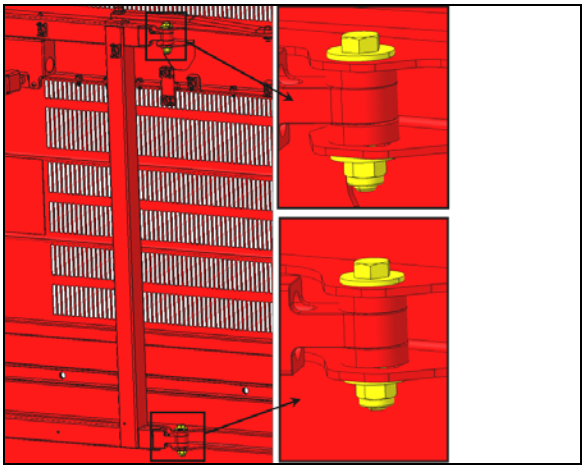

FIGURE 47

Longitudinal adjustment

5. Check the gap between the door and the adjacent panel at the level of the upper attachment point of the arm on the door. The gap should be ¼" (6 mm) (FIGURE 48).

   Gap 1/4" (6 mm)

   Tolerance is ± 3/64" (± 1mm)

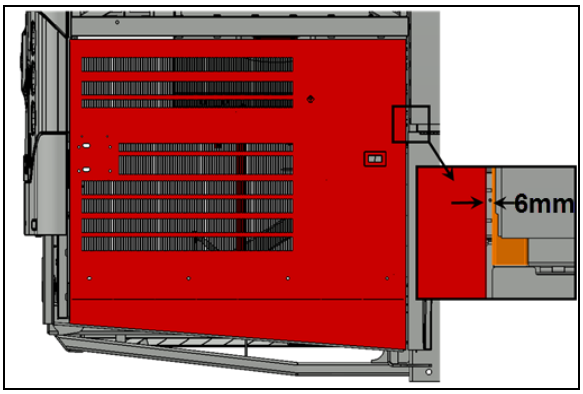

FIGURE 48

6. If the longitudinal position is out of tolerance, adjust using the adjustment provided on the inner side of the door, at the upper attachment point of the arm on the door (FIGURE 49).

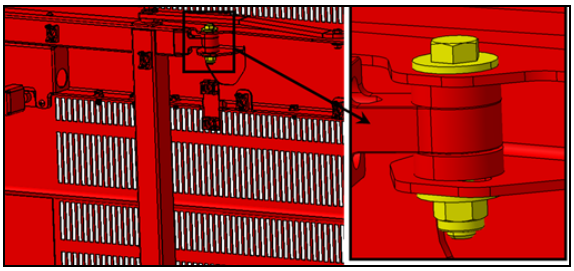

FIGURE 49

7. Check the gap between the door and the adjacent panel at the level of the lower attachment point of the arm on the door. The gap should be ¼" (6 mm) (FIGURE 50).

   Gap 1/4" (6 mm)

   Tolerance is ± 3/64" (± 1mm)

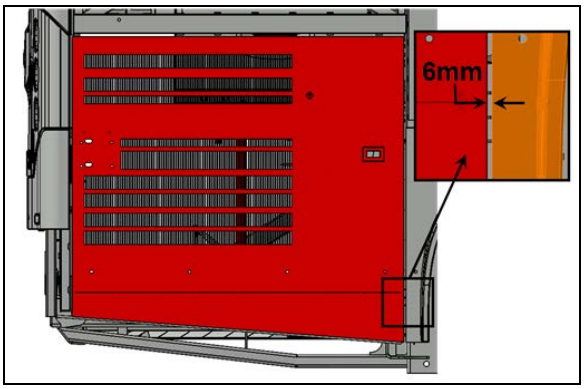

FIGURE 50

8. If the longitudinal position is out of tolerance, adjust using the adjustment provided on the

lower attachment point of the arm on the vehicle chassis (FIGURE 51).

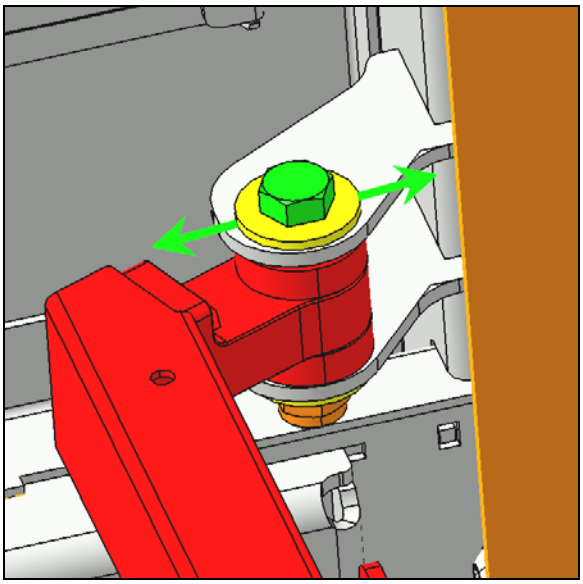

FIGURE 51

Latch installation

9. Install strike plate C and pin E centered in the available adjustment position provided by respective slotted holes (FIGURE 52). The components should be snug but not tight so that they can move when the door will be closed later on in this procedure.

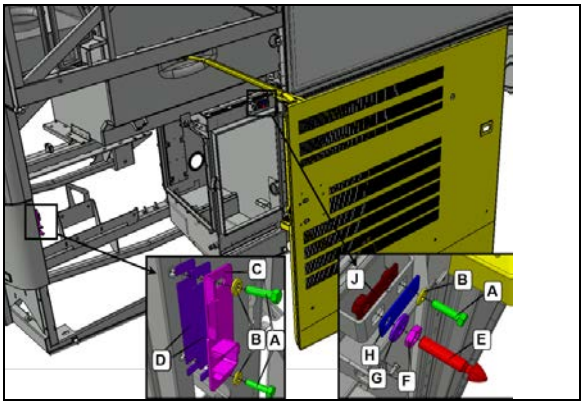

FIGURE 52

10. Check that the two items identified with arrows are snug but not tight (FIGURE 53).

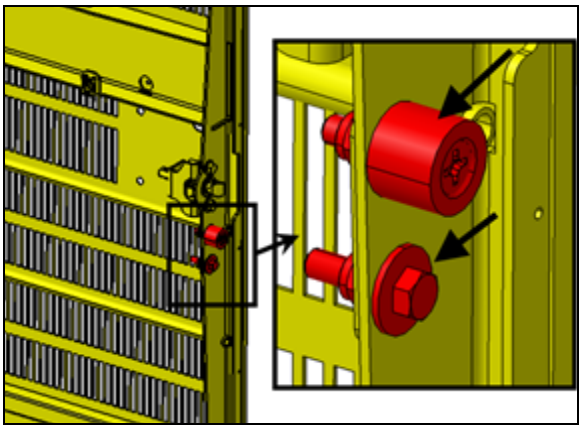

FIGURE 53

11. Before adjusting the pin, make sure that it doesn't exceed more than 2" (50mm) at the first closing of the door (FIGURE 54). Damage to the door can result if this condition is not respected.

Not more than 2" (50mm)

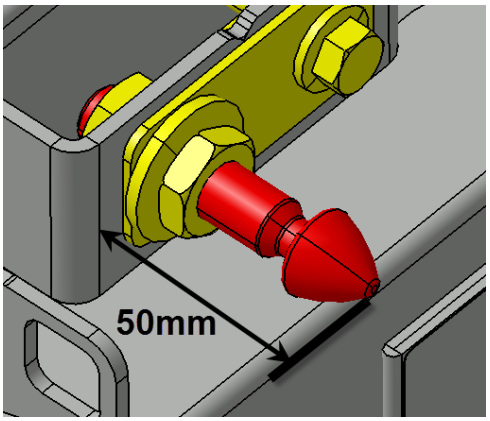

FIGURE 54

12. Close the door gently.

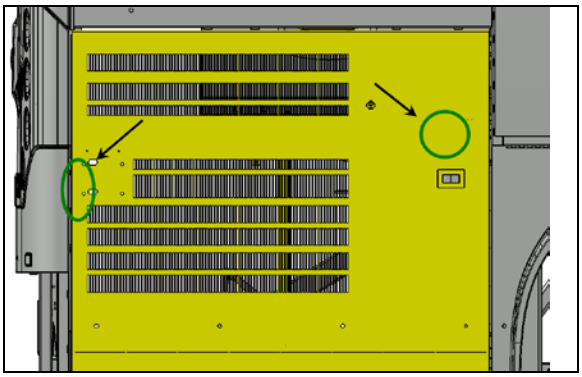

FIGURE 55

13. Open the door and perform a final tightening to the items indicated with arrows (FIGURE 56).

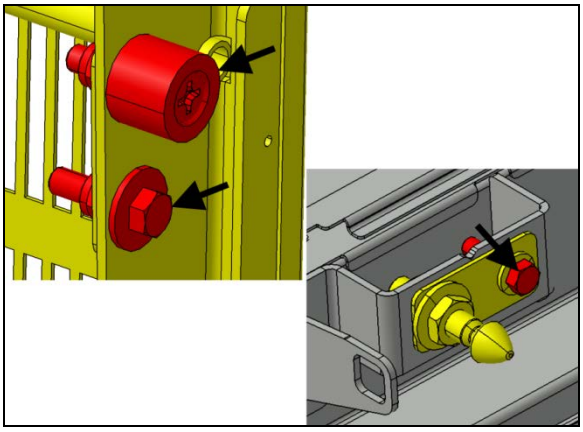

FIGURE 56

Transversal adjustment

14. Once closed, the door surface must be even with the adjacent steel panel.

    Tolerance is 3/64" (1mm)

FIGURE 57: USE A RULER (SHOWN IN BLACK) TO CHECK THAT SURFACES ARE EVEN

15. Use the pin to adjust the door so it is even with the adjacent steel sheet. Screw or unscrew the pin as required and then apply final tightening to the jam nut (FIGURE 58).

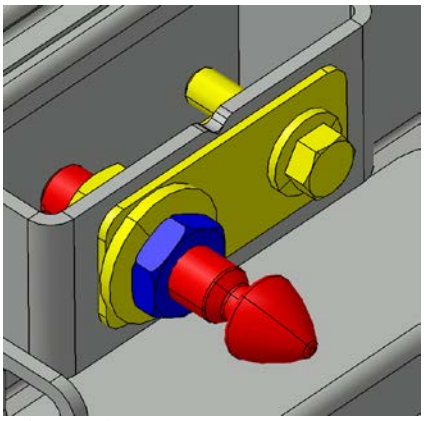

FIGURE 58

16. The R.H. side engine access door must exceed the engine compartment by 5/32" (4mm).

    Tolerance is ±3/64" (±1mm)

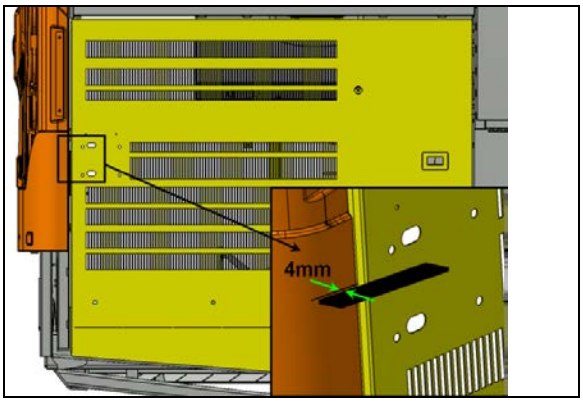

FIGURE 59

17. Perform the transversal adjustment by moving the strike plate using the slotted holes (FIGURE 60).

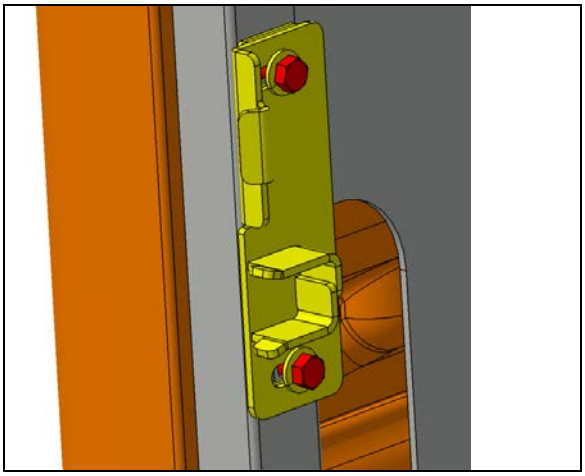

FIGURE 60

18. The latch bolt must engage not less than 13/32” (10mm) behind the strike plate.

    13/32” (10mm) min

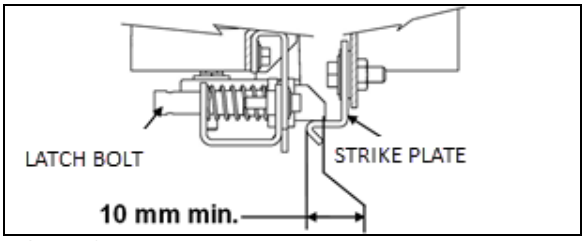

FIGURE 61

19. Screw in or out the two upper stoppers so that the upper part of the door exceeds the horizontal member by 5/32" to 3/16" (4mm to 5mm) (see FIGURE 62 & FIGURE 63).

20. Adjust the lower stopper in order to have the lower part of the door even with the fender.

    Tolerance is ± 3/64" (± 1mm)

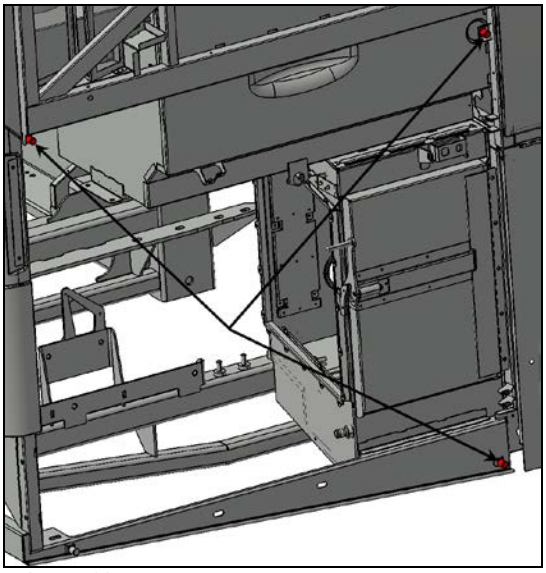

FIGURE 62

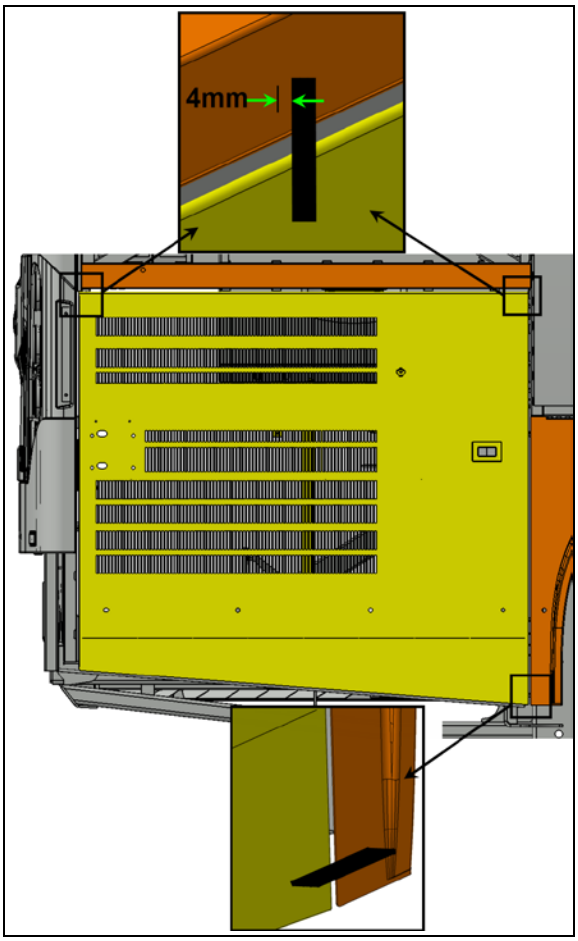

FIGURE 63

9.4.3 Engine Radiator Door

Radiator door may be adjusted for proper fit by untightening hinge bolts:

1. Loosen the bolts, (“A” & “C”, Figure 65) holding the hinge to the vehicle structure to shift the door "LEFT or RIGHT".

2. Loosening the bolts (“B” and “D”, Figure 65) allows the door to be shifted "UP or DOWN".

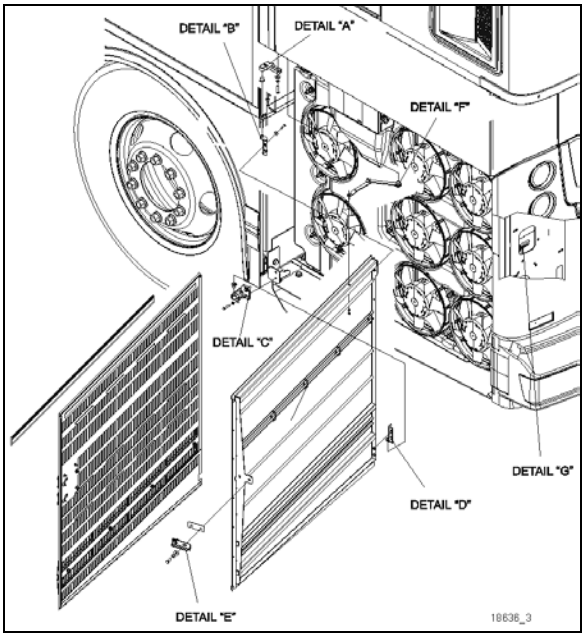

FIGURE 64: RADIATOR DOOR

3. Adjust the door position depending on the gap needed between exterior finishing panels.
4. Tighten the bolts

   Torque : 68 lb-in (8 Nm)
5. Check that the door swings freely and closes properly. It may be necessary to adjust the door latch tab to get proper fit and operation.

To adjust the latch mechanism ("E" and "G", Figure 65) and the striker pin:

1. Open the door and slightly loosen the latch tab ("E", Figure 65).
2. Place shims between tab and door frame to increase tab engagement length in the latch.
3. Move tab left or right to increase engagement depth in the latch.
4. Check door fit and operation.

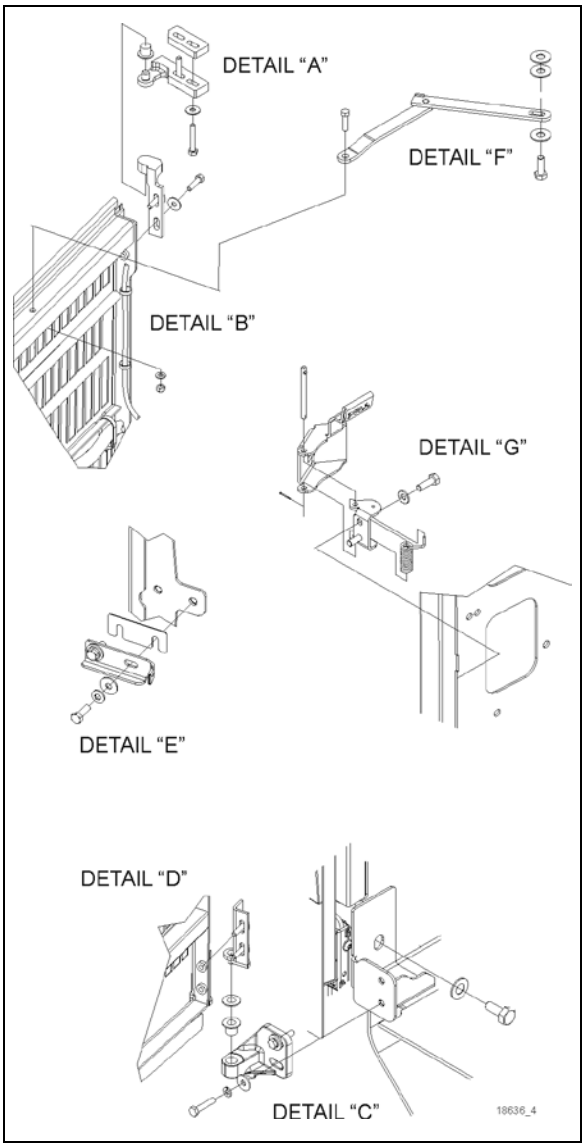

FIGURE 65: RADIATOR DOOR DETAILS

NOTE
The striker pin must engage at least 13/32" (10mm). Add spacers between the latch and the vehicle body to adjust the engagement.

NOTE
There should be no gap between the washer and the hinge upper and lower halves.

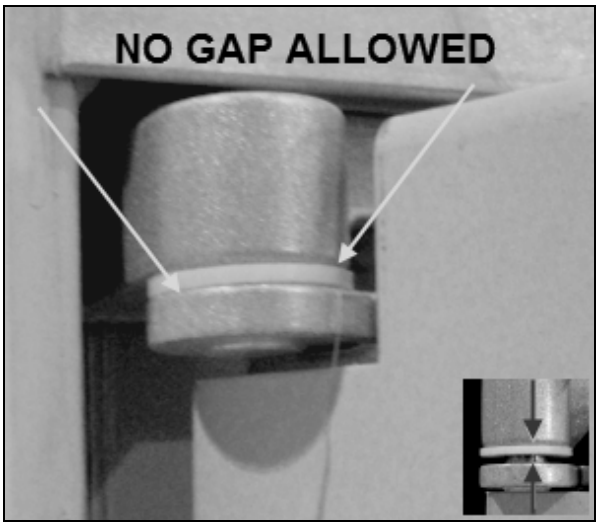

9.5 ZONE 5

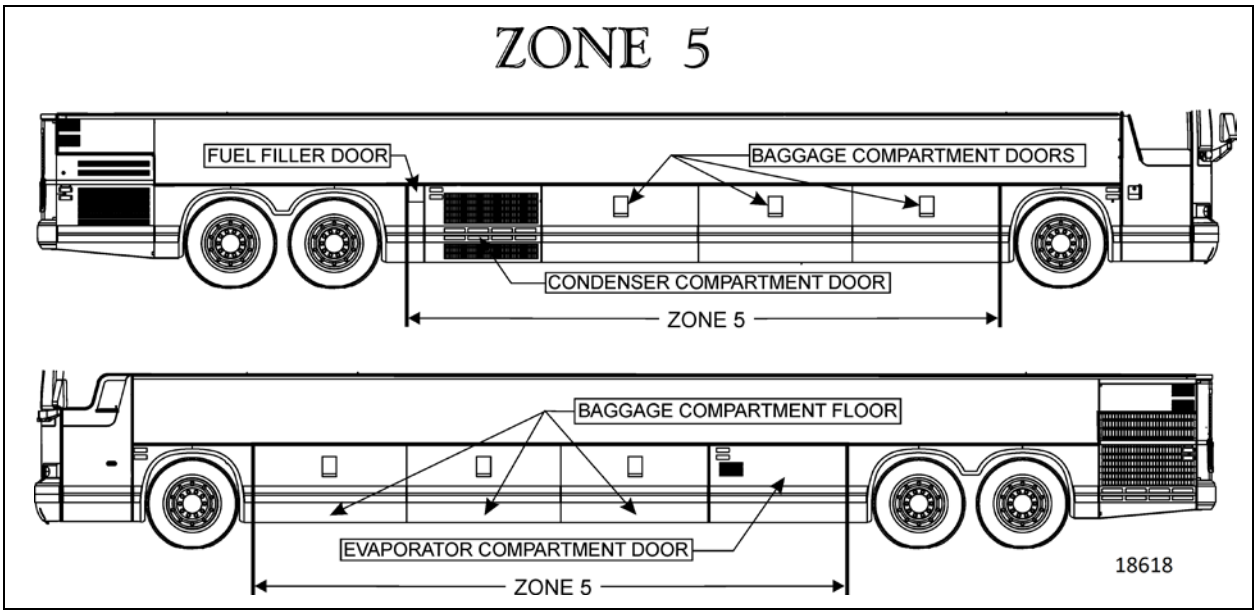

FIGURE 66: ZONE 5

9.5.1 Baggage Compartment Doors (Aluminum)

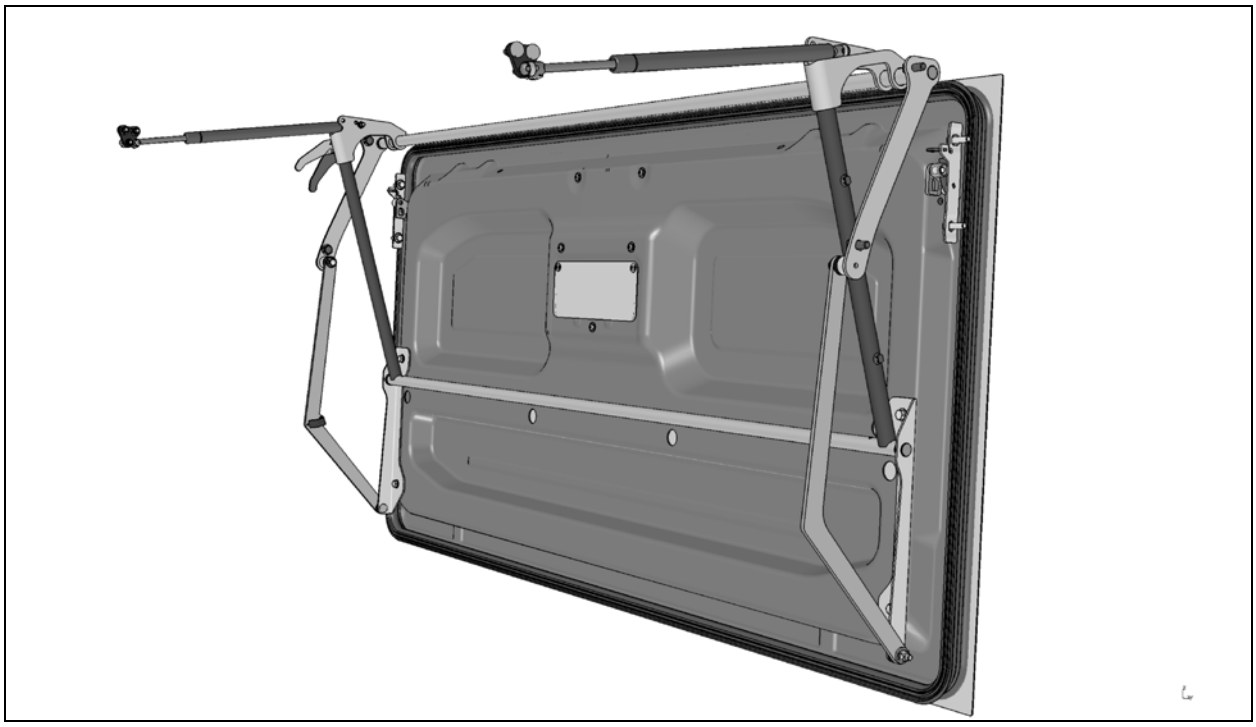

For the removal and installation of a baggage compartment door body panel, you will need:

A drill with drill bits;

Pneumatic hammer tool (Zip Gun);

Razor sharp window scraper or putty knife;

- Open damaged compartment door and unfasten rub rail fixing bolts. Remove rub rail.
- Unfasten bolts and disconnect cable if necessary in order to remove door from vehicle.
- Preferably install the door onto a work surface where it can be solidly fixed.

- **Door Panel replacement**
  - Refer to SAV10054-67.
- **Baggage Compartment Door Adjustment**

1. Adjust door to get a 6mm gap at the top.
2. All adjustments are to be made with door closed, unless specified.

NOTE
Vertical adjustment is achieved by moving the door along the mounting plate slots.

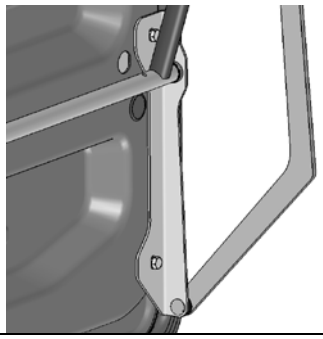

3. Center door in the opening using the retaining rings.

NOTE
Lateral adjustment is made by adding/ removing retaining rings in these locations.

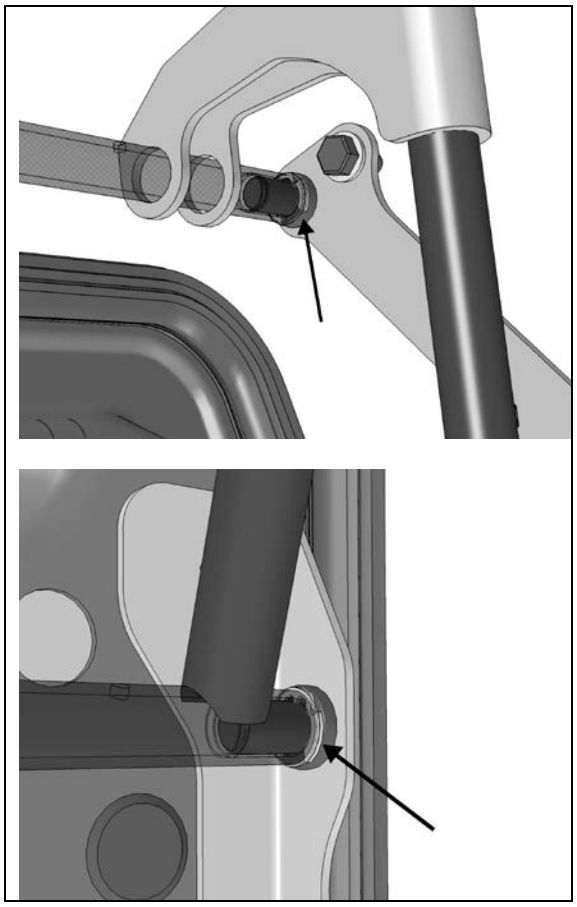

4. Adjust door position and evenness with reference to adjacent panels and doors.

NOTE

Adjustment is made by moving IN or OUT the lock plates. Adjust one corner at a time.

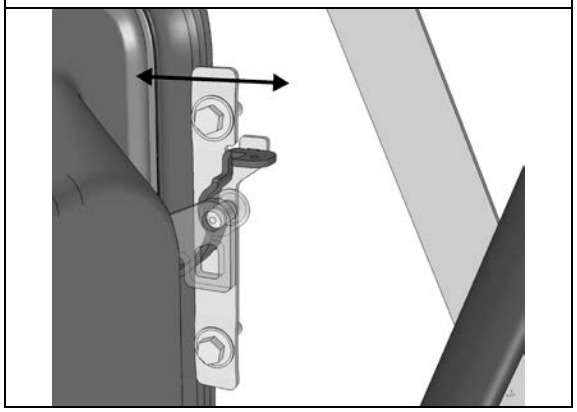

5. Check handle adjustment. Handle must remain tight against its plastic housing.

NOTE

Adjustment is made by moving UP or DOWN the lock plates.

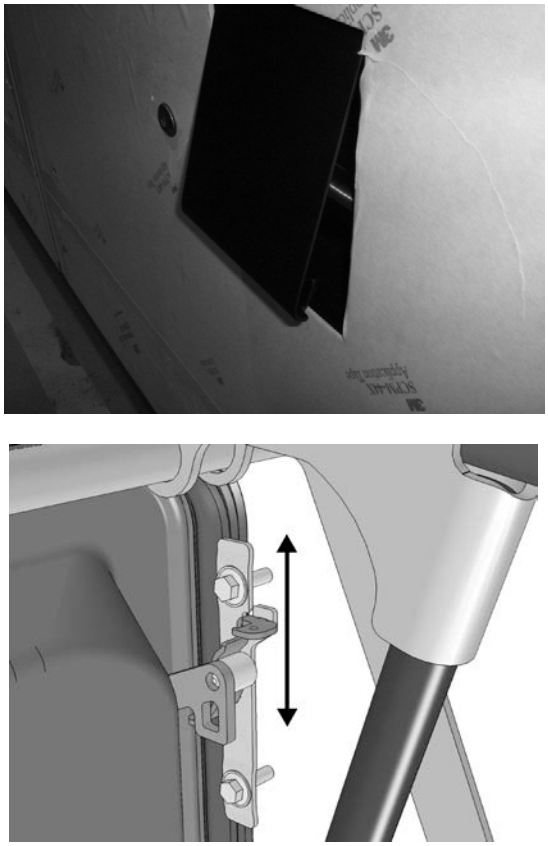

6. Open baggage compartment door and adjust using the cylinder mounting block.

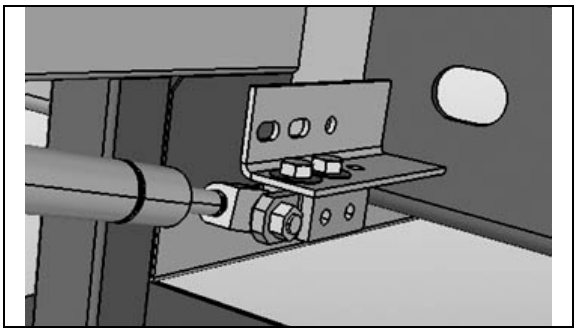

7. Door should be adjusted in reference to neighboring doors.
8. Target is to have 5 ½" (140mm) from bus body panel to door panel and +/- 2mm vertically between doors.

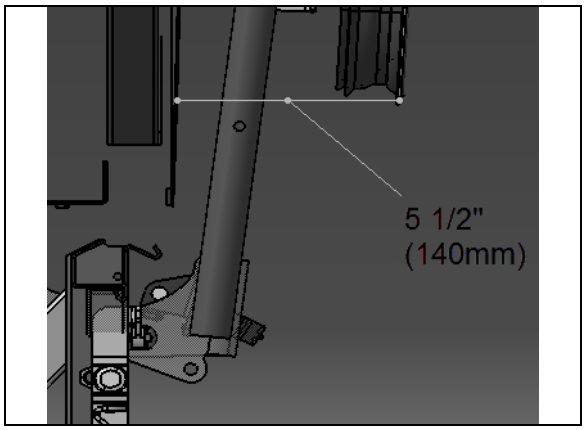

9. Tighten cylinder block fixing screws.

10. Door bottom edge compression can be adjusted by moving in or out the pantograph arms at this location.

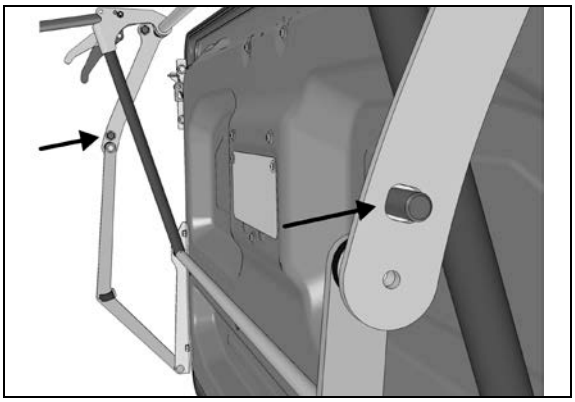

9.5.2 Wheelchair Lift Cassette Compartment Door

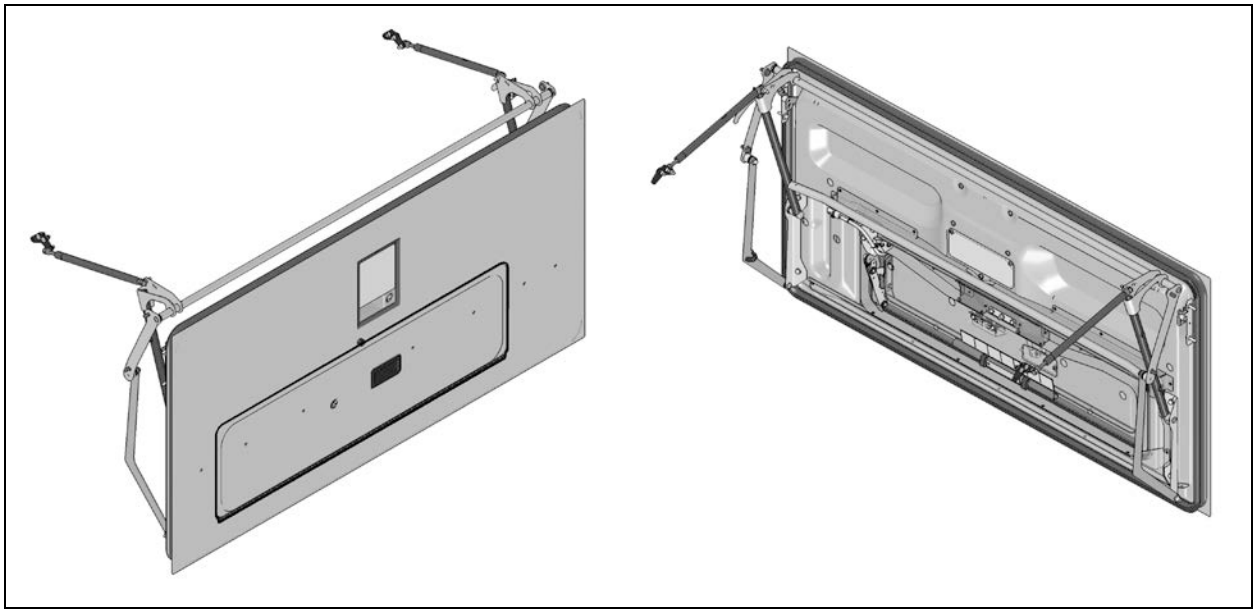

For the removal and installation of a wheelchair lift (WCL) cassette compartment door body panel, you will need:

A drill with drill bits;

Pneumatic hammer tool (Zip Gun);

Razor sharp window scraper or putty knife;

- ➢ Open damaged compartment door and unfasten rub rail fixing bolts. Remove rub rail.
- ➢ Unfasten bolts and disconnect cable if necessary in order to remove door from vehicle.
- ➢ Preferably install the door onto a work surface where it can be solidly fixed.

- **Door Panel replacement**
  - ➢ Refer to SAV10054-67.
- **Compartment Door Adjustment**
  - ➢ Refer to baggage compartment door procedure.
- **WCL Cassette Door Adjustment**

The small door has a piano hinge on its lower edge.

1. Install only two of the mounting screws, at each end to adjust the door.

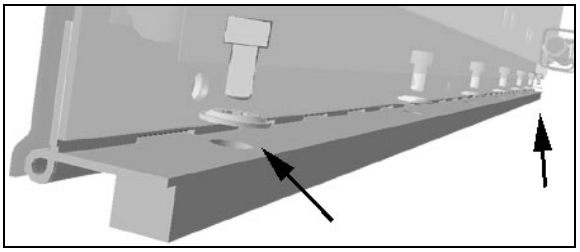

2. Close door and adjust in opening. A 1mm maximum difference between left and right measured gap is accepted.
3. Door should close flush with the larger door panel. Maximum flatness deviation within 1mm.
4. Install the remaining screws and seal with liquid Teflon #680098.

- **WCL Cassette Door latch adjustment**

To allow adjustment of the latch mechanism, lightly tighten the retaining hardware on receptacle and striker support (arrows).

1. Place centering tool G34148_500 in the receptacle cavity.

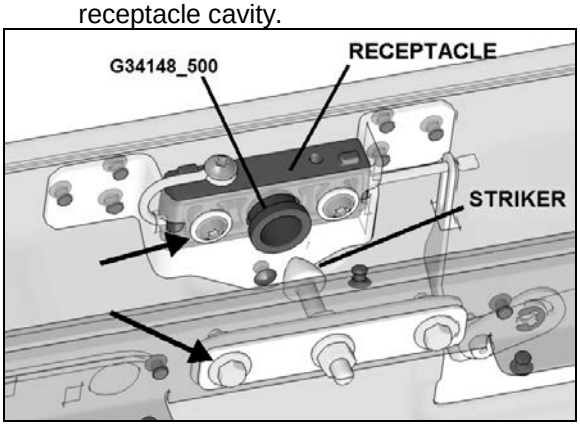

2. Close the door to center the latch mechanism.
3. Tighten screws
4. Check that the door swings freely and closes properly without interference or excessive force

9.5.3 Wheelchair Lift access door installation

⚠ **CAUTION**
Install the sliding door onto a suitable lifting device that will allow proper lifting and positioning.

1. Lift and move the sliding door near the opening.
2. Push the door into the opening making sure the positioning lugs are properly inserted into their housing then pivot the main hinge and secure the door using 4 bolts. Do not fully tighten the bolts yet.
3. Remove the lifting device from the sliding door.

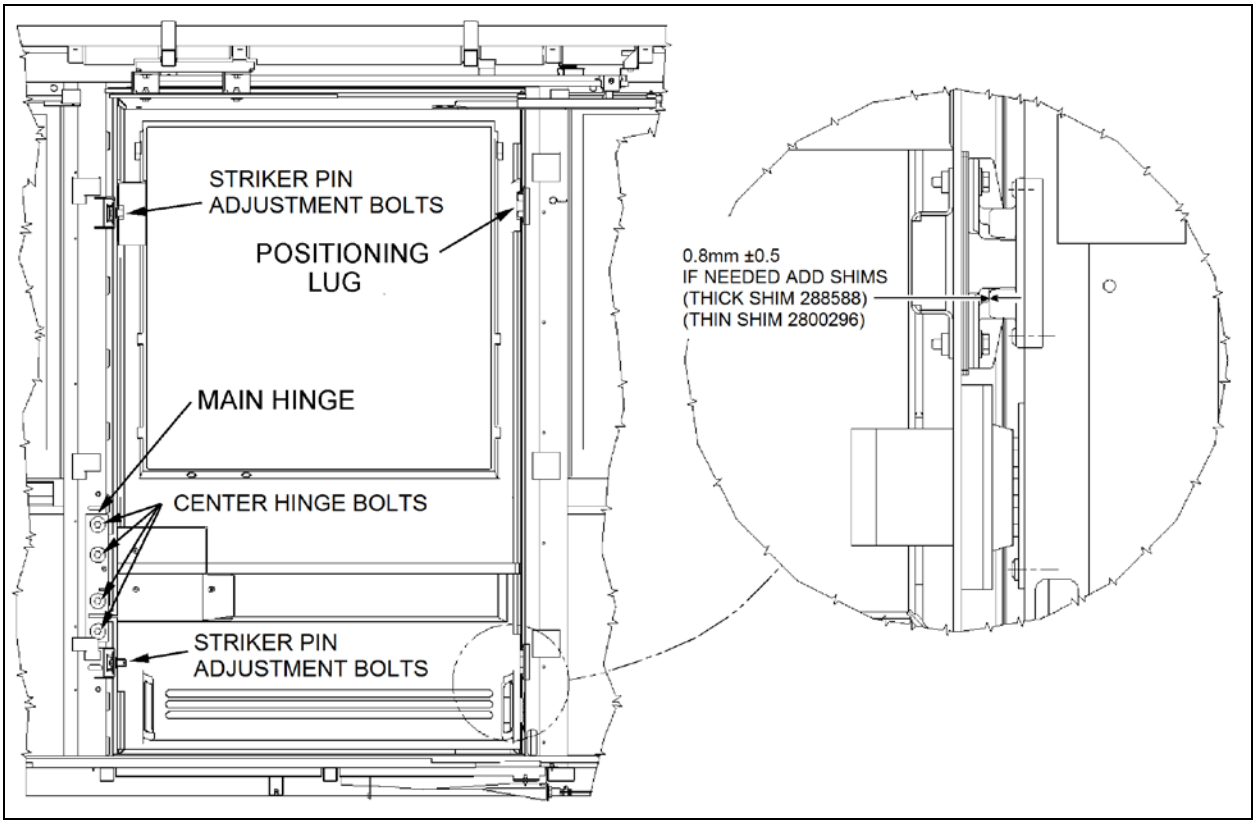

FIGURE 67: WCL SLIDING DOOR INSTALLATION **18739**

Adjustment:

1. Adjust sliding door height with reference to the side panels and windows.
2. Slide the top rail into the upper arm then bolt the rail to the structure. Do not fully tighten (Refer to Figure 68).

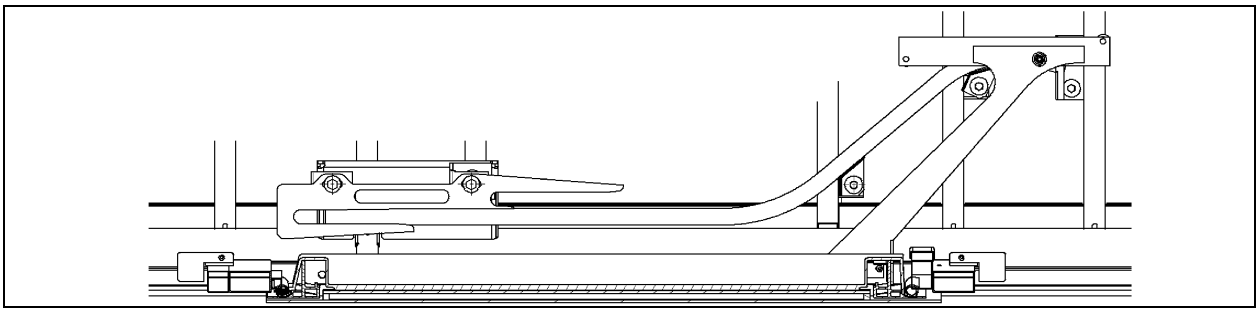

FIGURE 68: WCL UPPER ARM AND RAIL

3. Pull the door in or push from the outside to adjust the door with reference to the vehicle outside surface.
4. - Unfasten the upper arm bolt located on the door side.
   - Position the top rail at 3mm from the ceiling bracket.
   - Force the upper arm down then tighten the upper arm fixing bolt.
   - Pull the upper rail towards the inside in order to remove the play between the roller and the upper rail then tighten the rail fixing bolt at the back.
   - Push the lower rail towards the outside in order to remove the play between the roller and the lower rail then tighten the rail fixing bolt at the back.

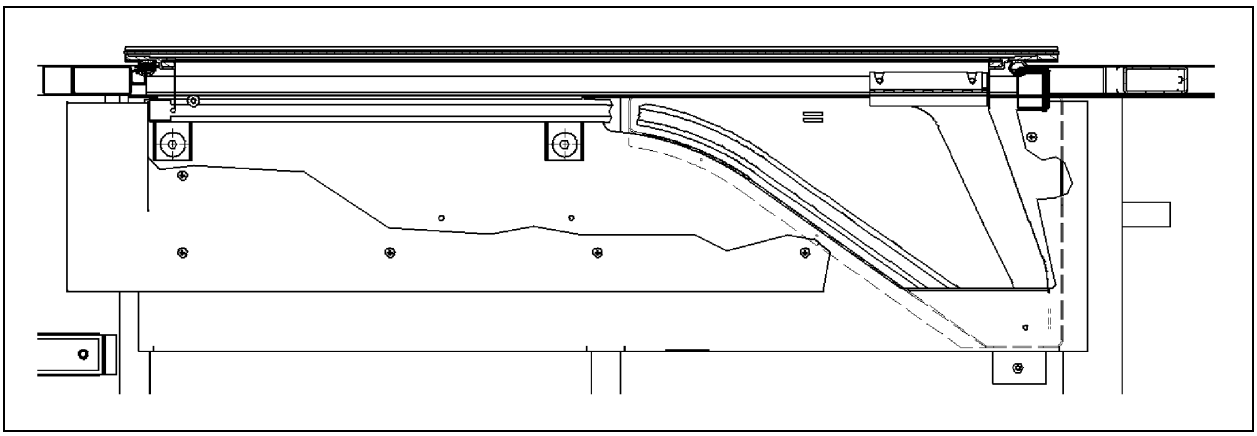

FIGURE 69: WCL LOWER RAIL INSTALLATION

5. Adjust the gap between the positioning lugs and their housing, required gap: 0.5 – 1.5mm. Add shims underneath the lugs to get the proper adjustment.
6. Take away the plays from the upper arm assembly by lifting the main hinge using a crowbar. Tighten the main hinge bolts

TORQUE: 31-38 lb-ft (42-52 Nm)

NOTE
Do not exert too much force to lift the door.

7. Open WCL sliding door completely.

8. - Pull the upper rail towards the inside in order to remove the play between the roller and rail then bolt the rail at front and center. Add some shims if necessary between the rail and the structure before tightening the bolts.
   - Push the lower rail towards the outside of the vehicle in order to remove the play between the roller and rail then bolt the rail at front and center. Make sure the rollers stay in contact with the support when starting to close the door.
9. Adjust the distance between the bottom of the guide and the roller when the door is completely open. Required distance: 2 – 3mm. Make sure the roller stay in contact with the guide.
10. Install and adjust striker pins.

TORQUE: 54-66 lb-ft (73-89 Nm)

NOTE
Make sure that a 2mm gap exists between the door structure and the striker.

11. Adjust latches releasing, the two latches must open simultaneously.

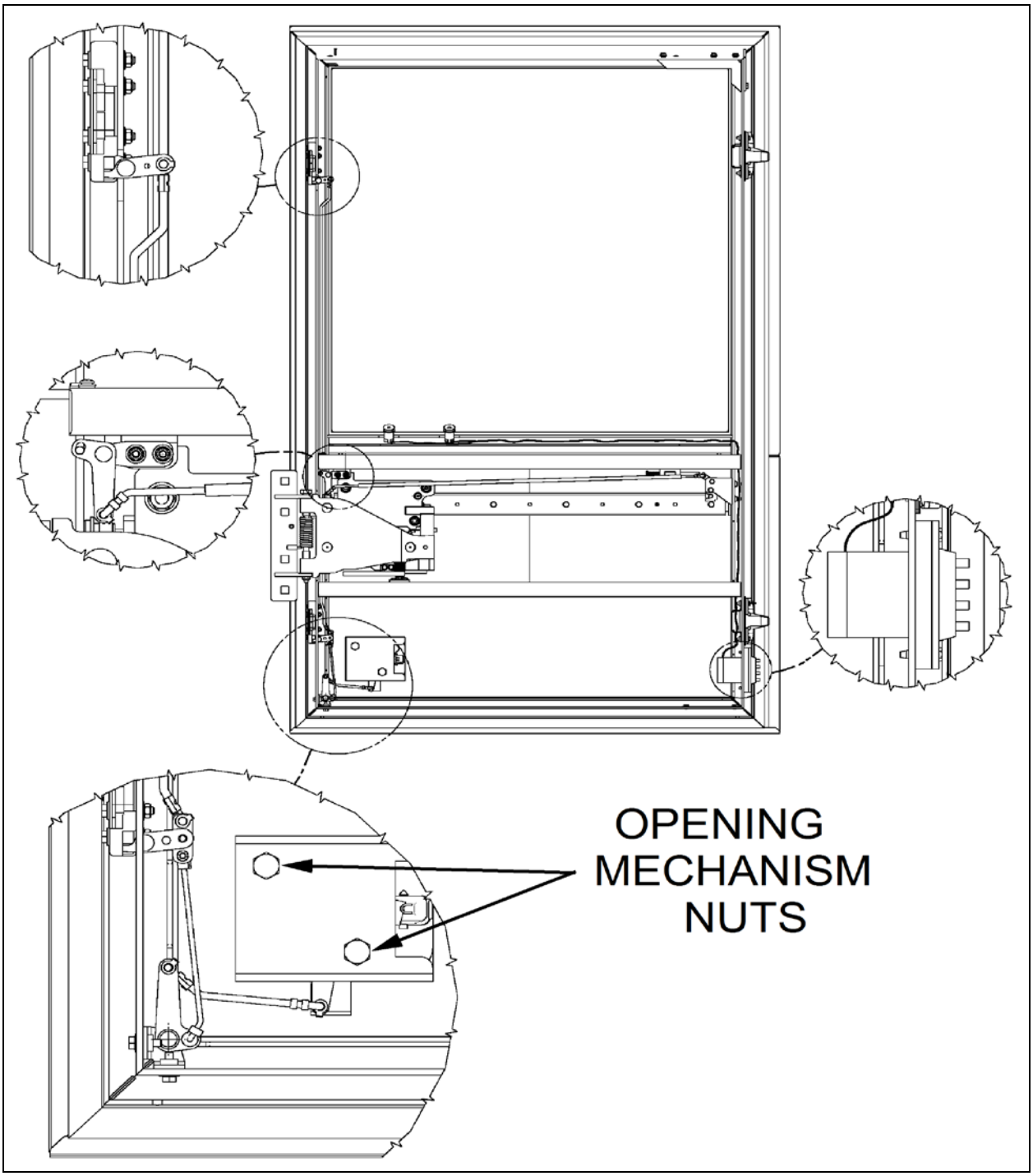

FIGURE 70: WCL SLIDING DOOR OPENING MECHANISM **18740**

9.5.4 Baggage Compartment Floor

- **Repair of Mantex Urethane Covering**

Minor Repair

Use “Dupont IMRON” paint. Apply using a paint brush or roller depending on gravity.

Paint Code: #J4099U

Major Repair (Hole)

Chamfer the whole perimeter of the damaged area. If applicable, remove loose covering. Remove dust and particles.

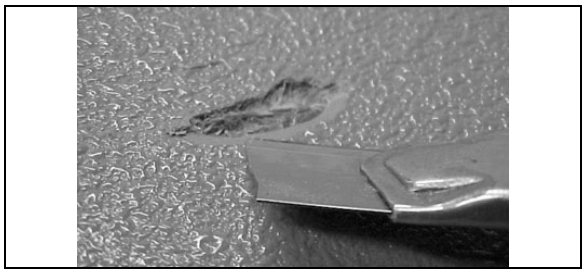

Cover and protect damaged area surroundings.

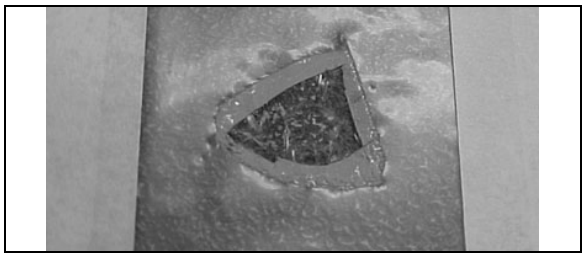

Using a plastic spatula, apply some Sika 221 grey onto the damaged area.

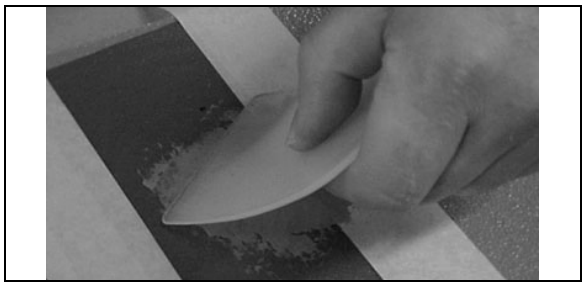

Remove masking tape and protection around damaged area.

Spray pure water onto Sika. Use a floor sample to create some texture onto the adhesive.

If possible spray some more water onto the adhesive to accelerate curing.

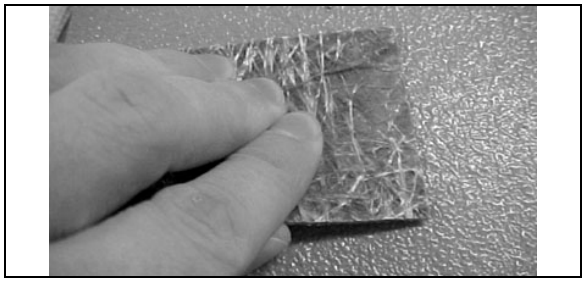

Allow drying for at least **2 hours** then repaint as per paragraph: Minor Repair.

- **Baggage Compartment Floor Installation**

Preparation and Installation

Clean baggage compartment support structure using anti-silicone.

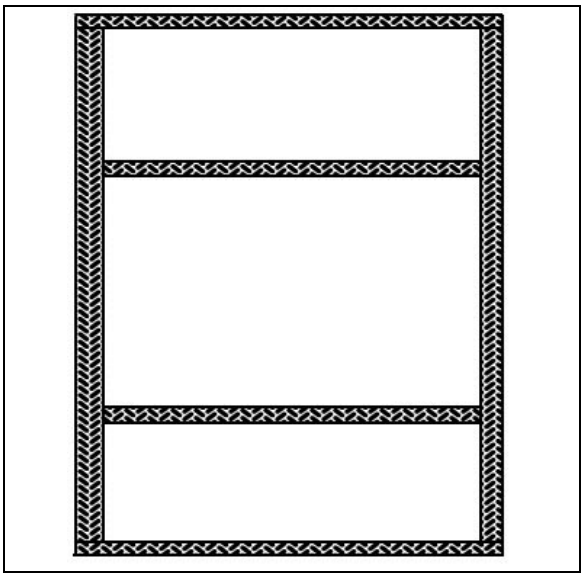

Glue spacers (790392) about 16-inch apart.

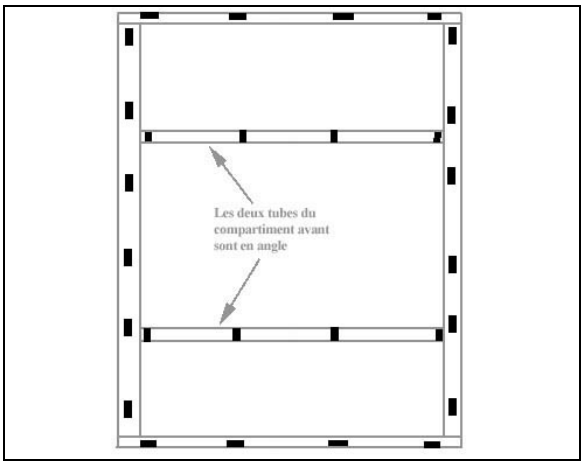

Rear baggage compartment without WCL.

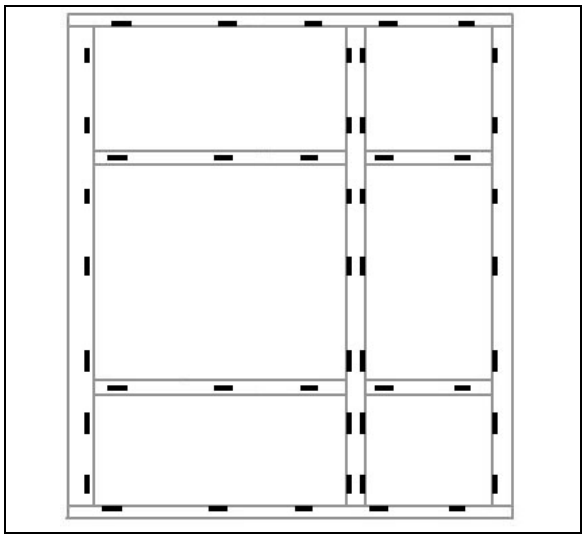

Rear baggage compartment equipped with WCL

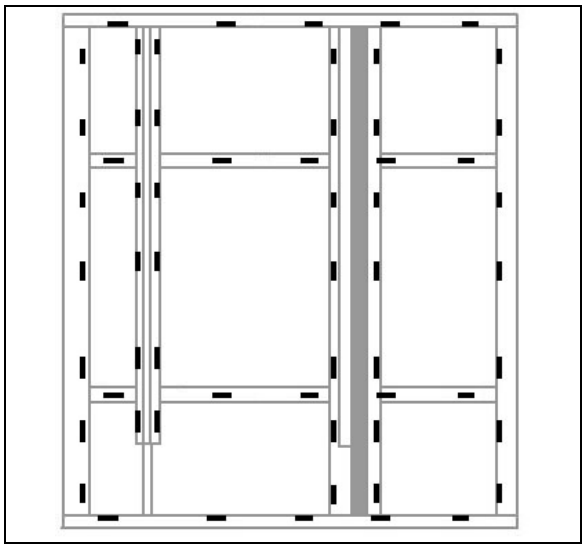

Prepare baggage compartment Mantex floor. Clean panel underside and edges.

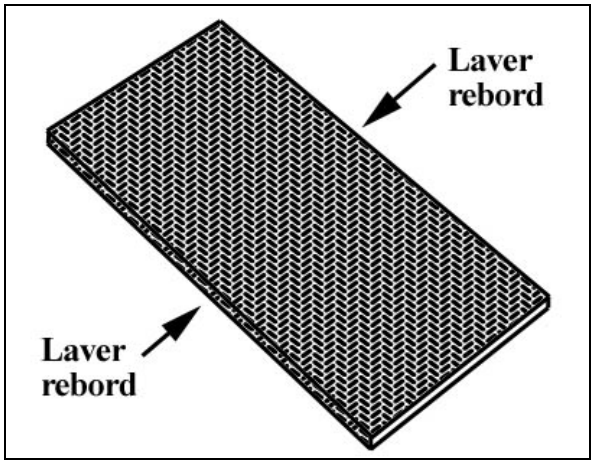

Using a triangular nozzle, apply “Simson” glue (685126) onto support structure.

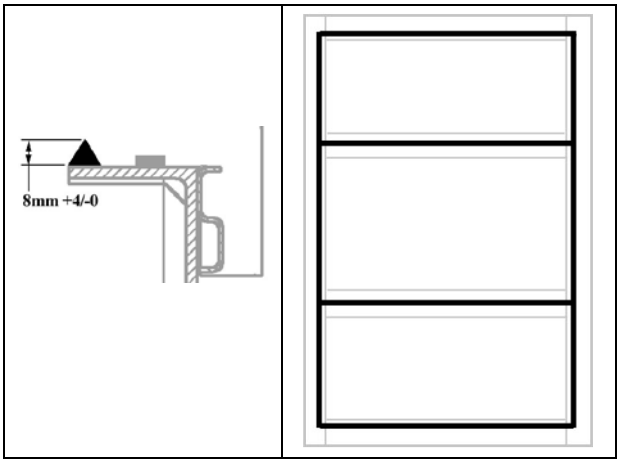

Rear baggage compartment without WCL.

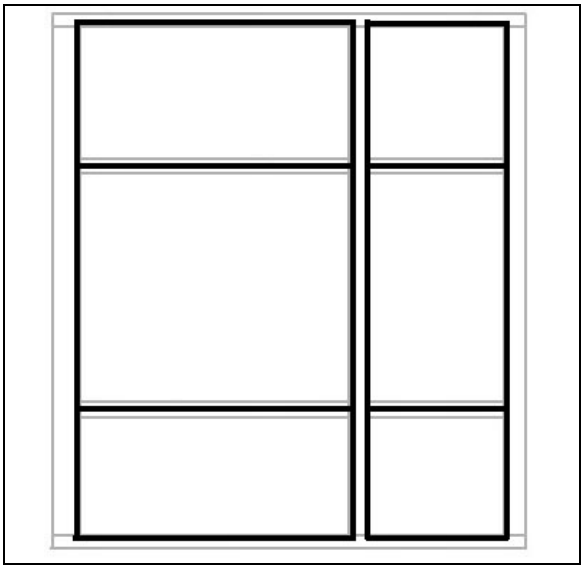

Rear baggage compartment equipped with WCL

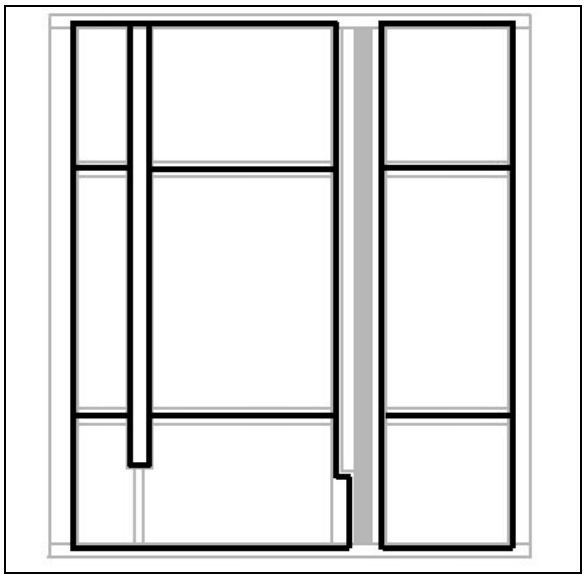

Carefully install panel onto support structure.

Evenly distribute and install conforming weights (6 to 8) (80 to 100 lbs **total**) onto panel for at least **4 hours**. Make sure panel does not move.

Finishing Joints

In the case of lateral finishing joint, apply some masking tape ¼“ from panel edge and ¼” above panel.

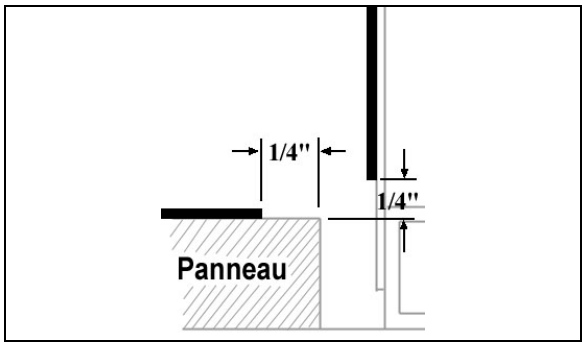

In the case of front finishing joint, apply some masking tape on each side of joint.

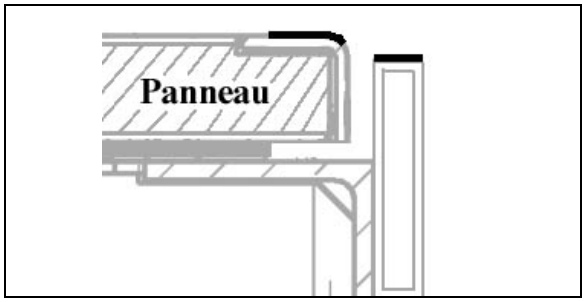

Clean with anti-silicone the area where the Simson glue will be applied.

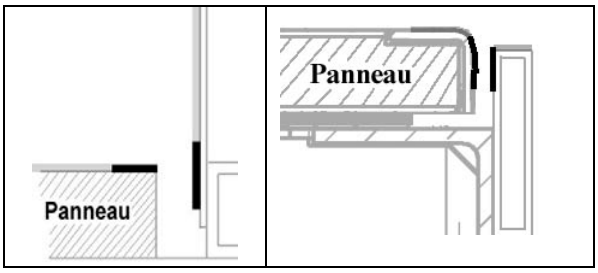

Apply some Simson glue to fill the gap.

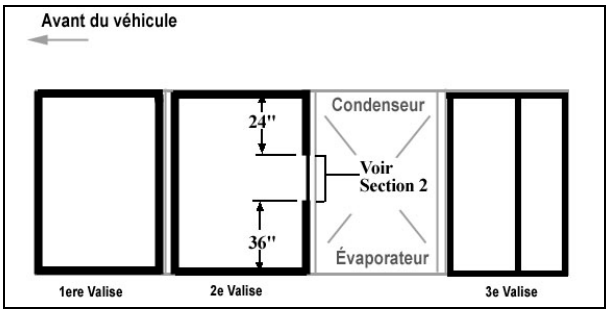

Front finishing joint

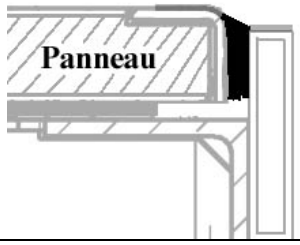

Section 2
Flat joint in front of fuel tank access panel

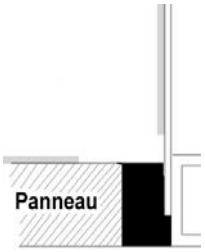

Use plastic spatula #682838 to perform radius

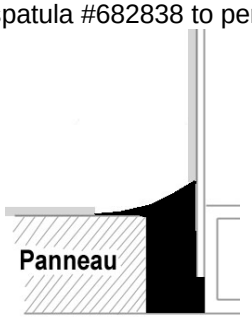

Rear baggage compartment equipped with WCL

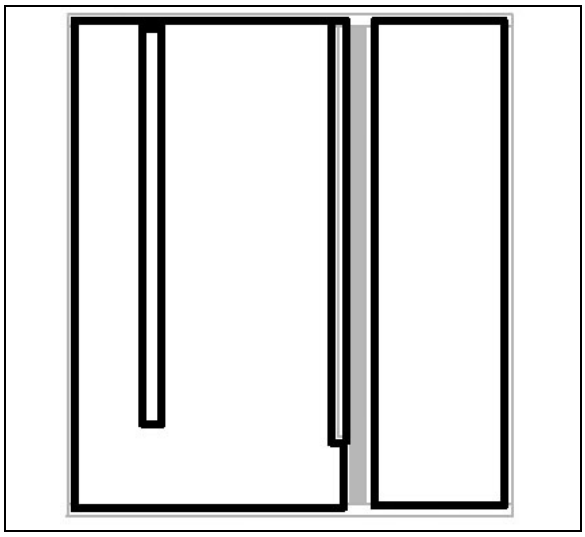

Rear baggage compartment without WCL.

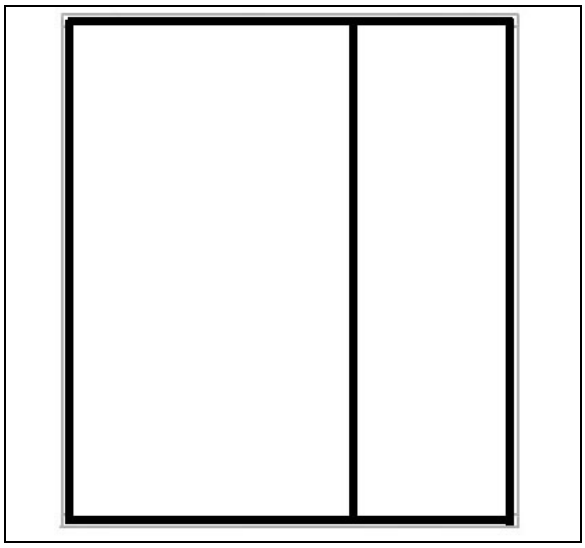

Remove masking tape.

Smooth down joints using soapy water.

9.5.5 Evaporator Compartment Door

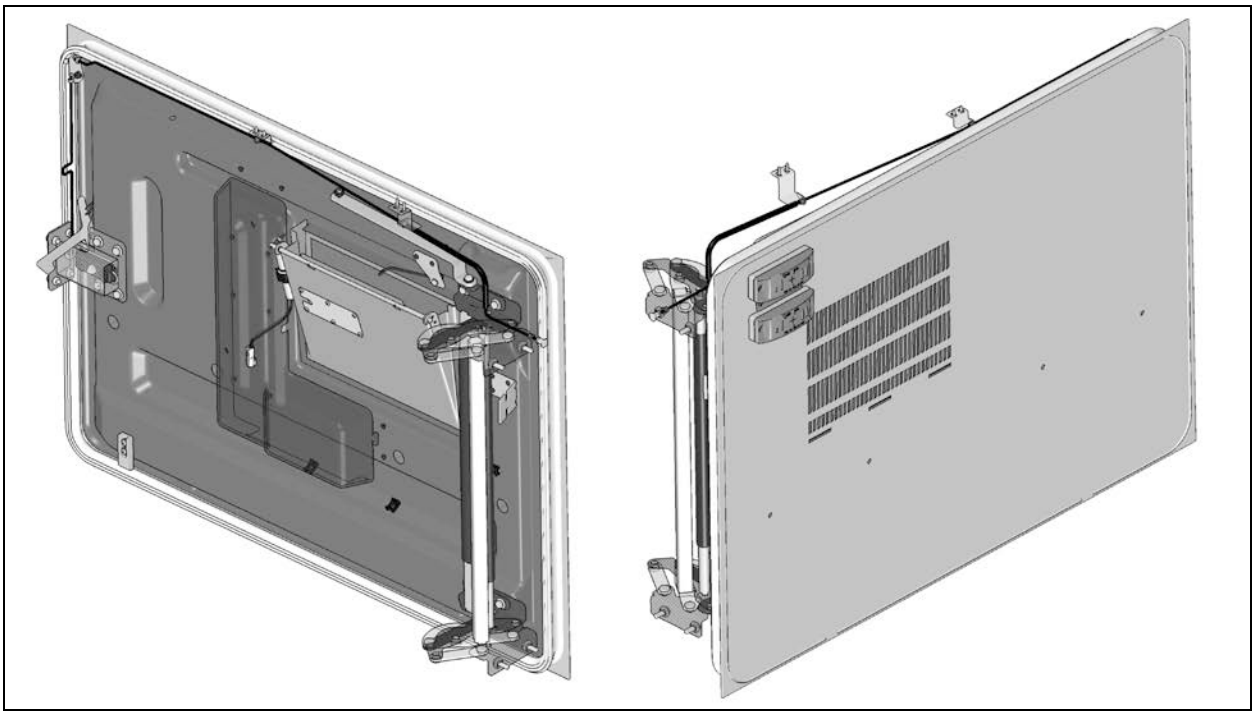

FIGURE 71: EVAPORATOR DOOR (ALUMINUM)

For the adjustment of an evaporator door, you will need:

- Centering tool G34148_500

- **Door adjustment**

1. Open the evaporator door.
2. Loosen the screws fixing the hinge to hinge attachment or hinge to door assembly. Loosening the screws allows the evaporator door assembly to be shifted "LEFT or RIGHT" and "UP or DOWN" or “IN and OUT”.
3. Adjust evaporator door assembly position at the hinge.
4. Door exterior panel on hinge side should be positioned at 29mm +/- 2mm measured from bus frame out.

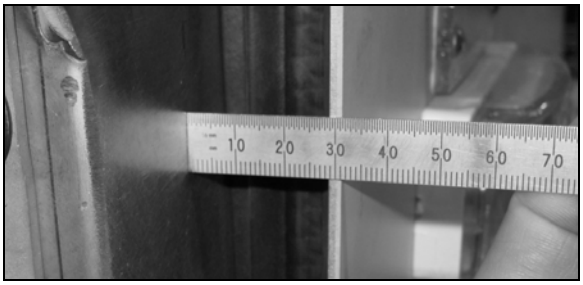

5. Respect the required gap between exterior finishing panels.
6. Tighten the hinge screws.
7. To allow adjustment of the latch mechanism, lightly tighten the retaining hardware on receptacle and receptacle support to frame.
8. Place centering tool G34148_500 in the receptacle cavity.

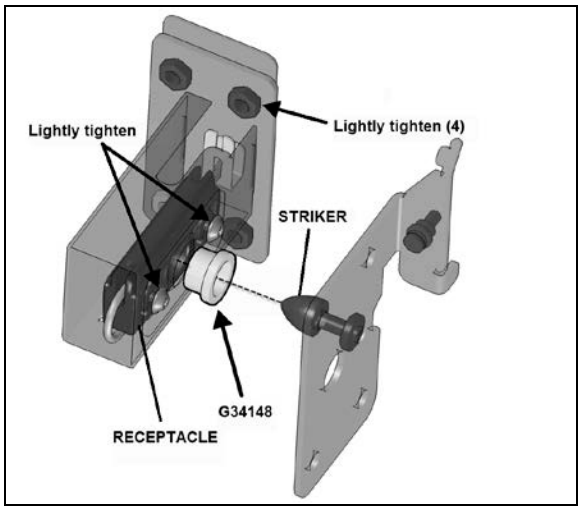

9. Close door to center the latch assembly.
10. Tighten the Receptacle screws only.
11. .Door exterior panel on latch side should be positioned at 8mm +1mm from frame. Make the adjustments by moving the receptacle support.

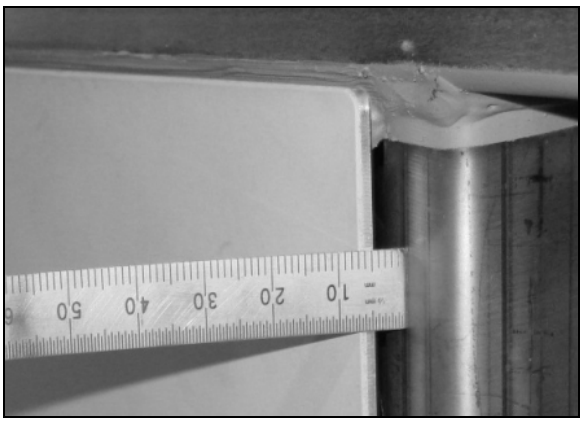

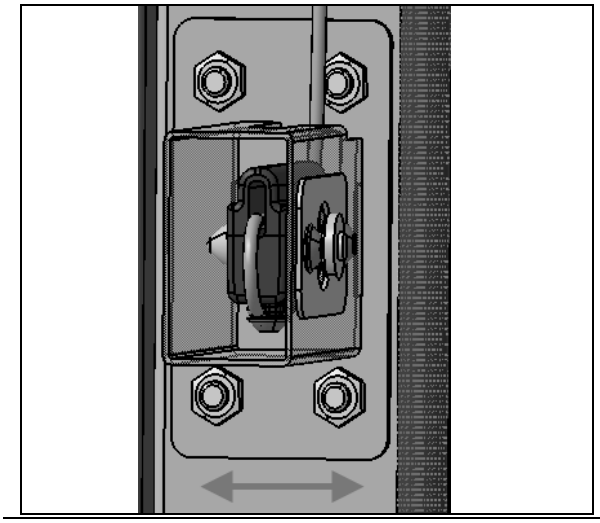

12. Make sure that backing plate is parallel to structure before tightening hardware
13. Make sure that skid bar only touches slightly bus structure at bottom. The door should not move up when closing.

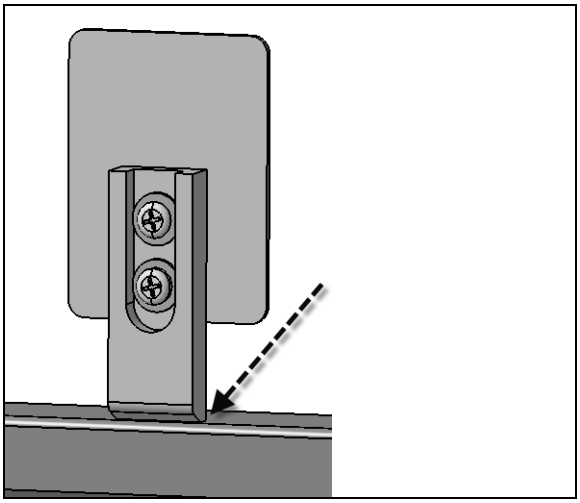

14. Check that the door swings freely and closes properly.

- **Door release in the event of a latch failure.**

If the door release mechanism is damaged or ceases to function for any reason, the door can be released by removing these screws on the fore wall of the fender side

9.5.6 Condenser Compartment Door

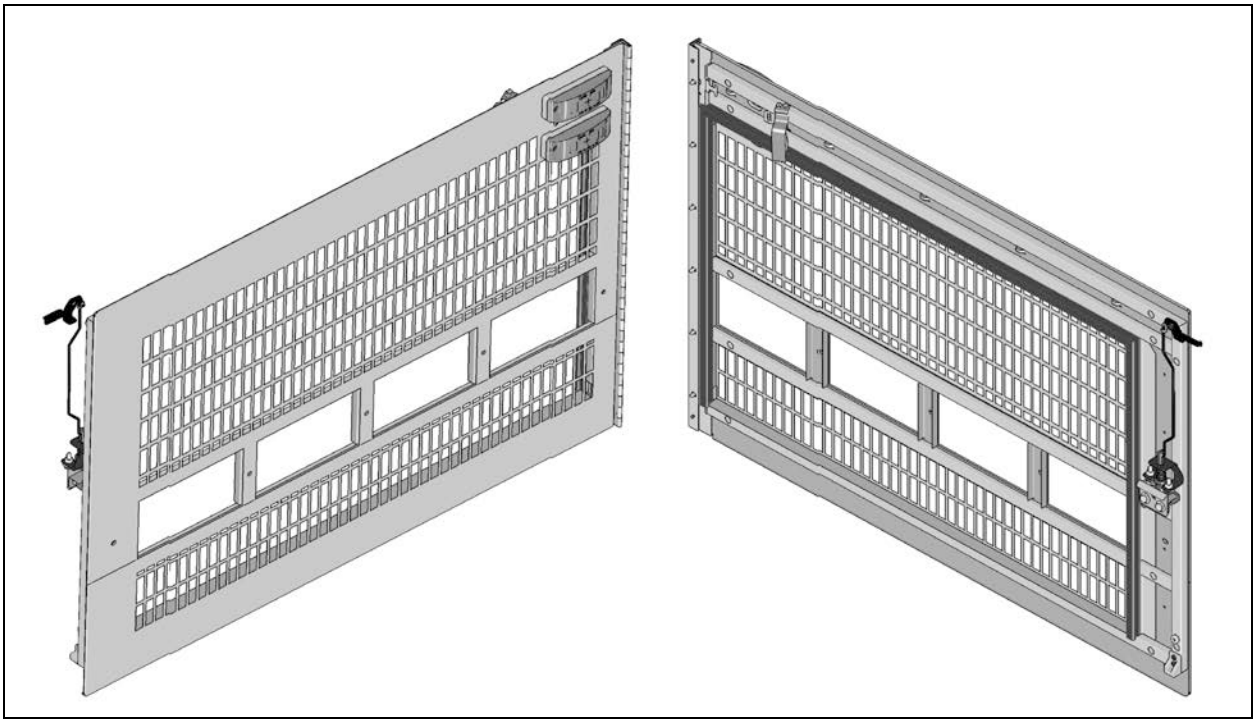

FIGURE 72: CONDENSER DOOR

1. Open the condenser door.

2. Loosen the screws fixing the hinge to hinge attachment or hinge to door assembly. Loosening the screws allows the condenser door assembly to be shifted "LEFT or RIGHT" and "UP or DOWN" or “IN and OUT”.
3. Adjust condenser door assembly position at the hinge.
4. Respect the required gap between exterior finishing panels.
5. Tighten the screws.
6. Check that the door swings freely and closes properly. It may be necessary to adjust the door latch to get proper fit and operation.

9.5.7 Fuel Filler Door

1. Open the fuel filler door.
2. Loosen the screws holding the panel to hinge assembly.
3. Adjust the fuel filler door position according to distance required between exterior finishing panels.
4. Tighten the nuts.
5. Check that the door swings freely and closes properly.

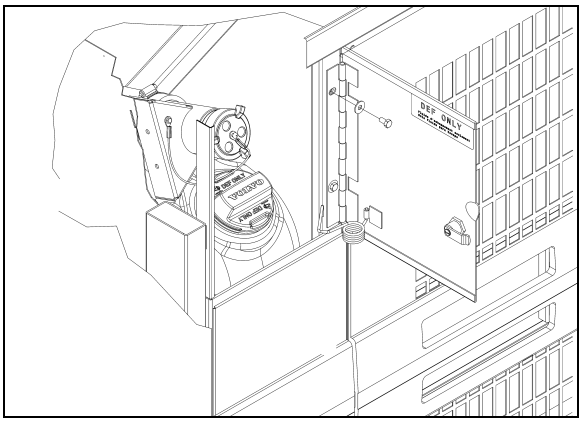

FIGURE 73: FUEL FILLER DOOR 03046

9.6 ZONE 6

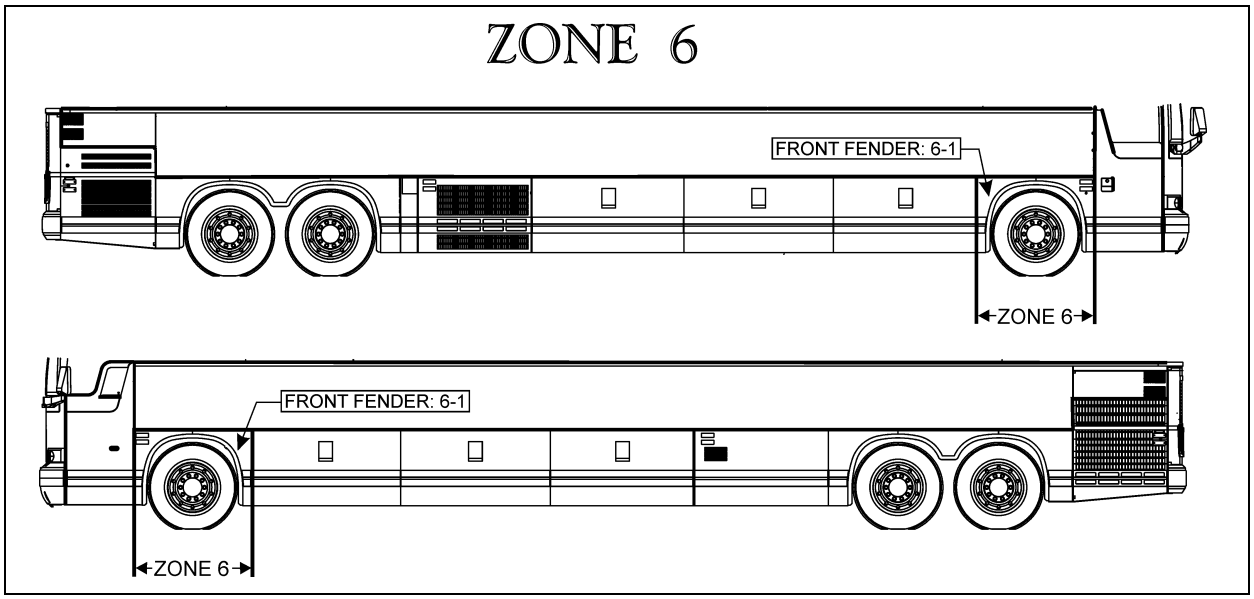

FIGURE 74: ZONE 6 18629

9.6.1 Front Fender

Front fender may be removed using the following procedure:

Remove the nuts on the inside of the fender. Remove the fender from the vehicle. To reinstall, reverse the procedure.

9.7 ZONE 7

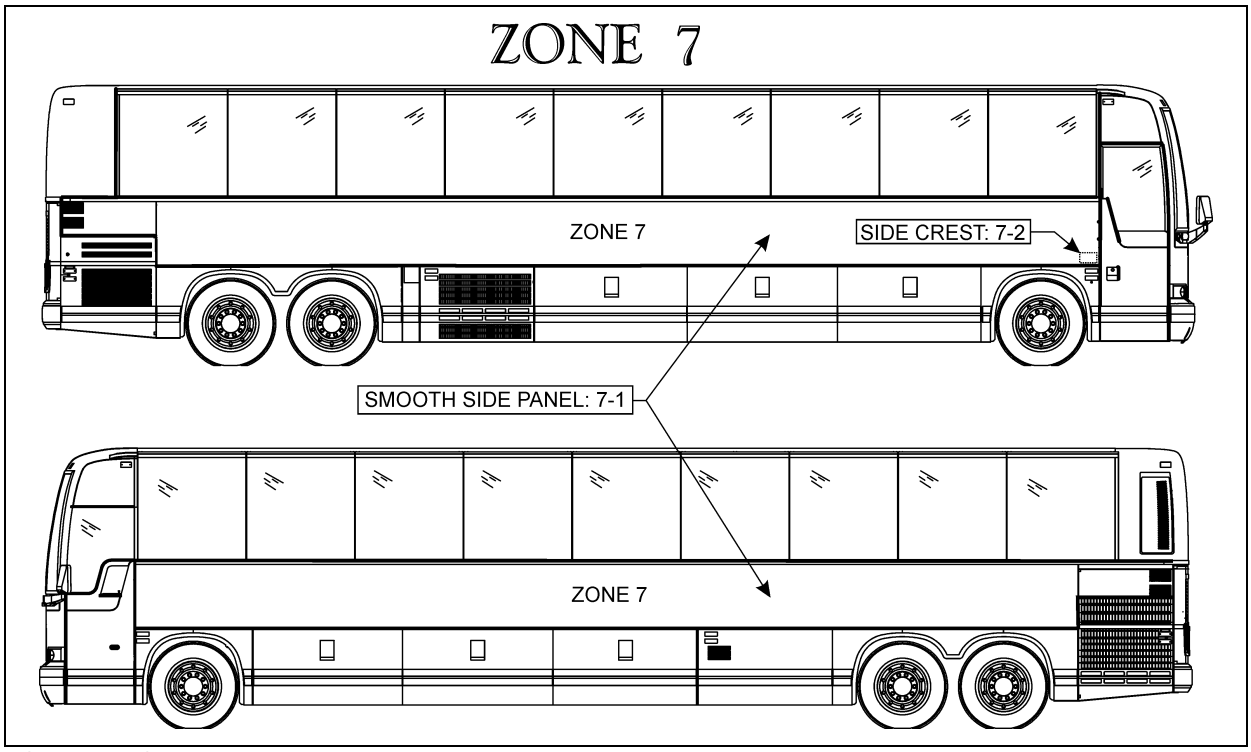

FIGURE 75: ZONE 7 18630

9.7.1 X3 Smooth Side Panel Replacement Procedure

Material:

Anti-silicone (682989)	√	Scotchbrite gray (680226)	√	Sika 221 gray	√
CHIX cloth (682384)	√	Sika 205 1liter (683097)	√	Sika 252 black	√
Blue cloth (682383)	√				

Equipment:

Glue gun	√	
Pencil	√	

SECTION 1 SMOOTH SIDE PANEL REMOVAL			
1.00	**REMOVAL**		
	A)	Remove finishing molding. Insert a screwdriver into snap-on finishing molding joint. Bend finishing molding enough to be able to fix a pair of locking pliers. Using the pair of locking pliers, pull the stainless steel molding and at the same time gradually cut Sika bead with a sharp knife.	Be careful not to damage the adjacent surfaces.
	B)	Using a hammer and punch, drive out rivet shanks from top and bottom and from front and rear finishing molding supports. Use a #11 titanium drill bit to remove rivet heads.	

	C)	Grind tig weld spots at each end of side panel.	
	D)	Safely support or temporary fix side panel.	**Warning: Panel weights over 200 pounds**
	E)	Insert a flat screwdriver between the side panel and the vehicle chassis, in the top left and right corners. Make sure to separate side panel from structure.	Be careful not to damage the adjacent surfaces.
	F)	Use the c-clamp to separate the side panel from the back structural panel and at the same time gradually cut Sika bead with a sharp knife.	Ideally, the hoist or chain block must be fastened to the floor while pulling from a 45° angle so as not to damage the vehicle structure
	G)	Remove as much glue as possible from the structure using a putty knife or pneumatic knife without damaging 206 G+P primer.	Never heat SikaFlex adhesive to remove.
	H)	Check panel horizontal supports for straightness using a straight edge. Take measurements with a ruler.	Tolerance : 1mm towards the outside and 1.5mm towards the inside.

SECTION 2 PREPARATION OF SURFACES			
2.00	**VEHICLE SURFACE PREPARATION**		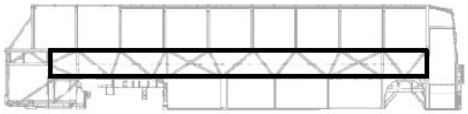
	A)	Clean using "anti-silicone" until all clothes come clean. See SAV00001 section A.	
	B)	Use the belt sander (grit coarse) Use a new paper on each vehicle side.	
	C)	Clean using "anti-silicone" until all clothes come clean. See SAV00001 section A.	
	D)	Apply – Sika 205 See SAV00001 section C.	
2.05	**SIDE PANEL PREPARATION**		
	A)	Clean using “anti-silicone” until all clothes come clean. See SAV00001 section A.	
	B)	Use the belt sander (grit coarse) Use a new paper on each vehicle side panel.	
	C)	Clean using “anti-silicone” until all clothes come clean. See SAV00001 section A.	
	D)	Apply – Sika 205 See SAV00001 section C.	

SAV00001 Section A Alcohol or Anti-silicone

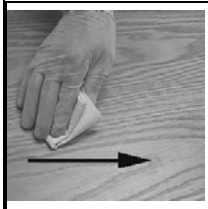 ***1.*** **Apply** **CHIX cloth**	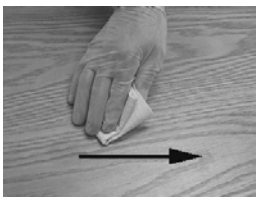 ***2.*** **Dry immediately** **Blue cloth**

3. **Allow to dry**

Mandatory	**Minimum time : Wait for product to evaporate**
	After 2 hours: Start cleaning operation again
Before applying any other product	If surface seems dusty, greasy or with finger marks, start cleaning operation again.

Section B Sika 205

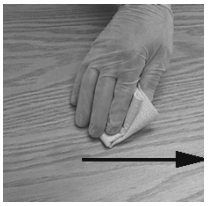

1. **Apply**

CHIX cloth

2. **Allow drying**

Mandatory	**Minimum time**	**- For a smooth surface (aluminum, stainless, steel, fiber glass (gelcoat side), etc.):**	**2 minutes**
		- Pour a porous surface (fiber glass (non gelcoat side), etc.)	**10 minutes**
	After 2 hours : Reactivate surface with Sika 205		
Before applying any other product	If surface seems dusty, greasy or with finger marks, start operation again.		

SECTION 3 SIDE PANEL INSTALLATION

3.00	A)	Using a pencil, mark the double-face self-adhesive tape position onto vehicle side.	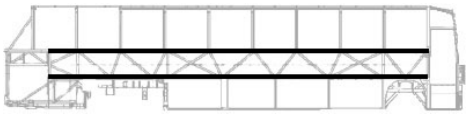
	B)	Apply 1/8 X ½"double-face tape as per marking.	
	C)	Compress tape	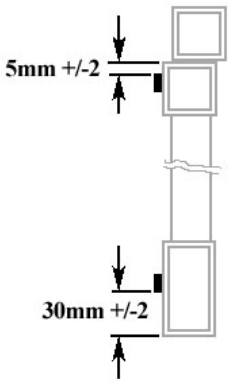
	D)	Remove protective film from double-face self-adhesive tape center section.	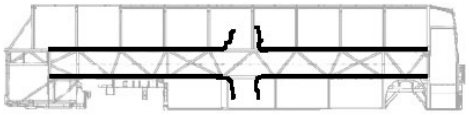
3.05	Install 1/8 X ½" foam tape onto middle reinforcement then compress.		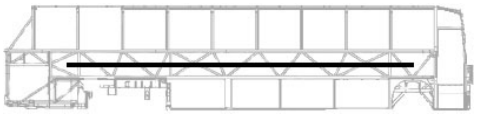
3.10	Apply Sika 252 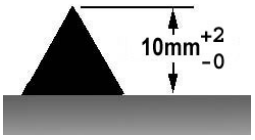 – Onto vehicle surface – Cut nozzle as per template – Use the guide for the application Bead must be continuous for the whole perimeter.		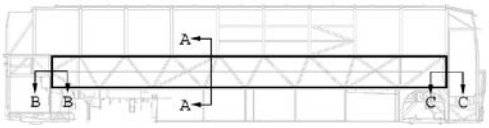 Section A-A / Section B-B / Section C-C 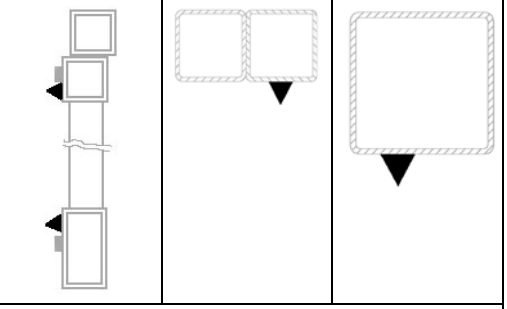
3.15	A)	Install side panel onto support jig.	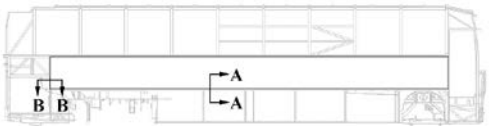

	B)	Position side panel in front of vehicle structure	**Section A-A**	**Section B-B**
			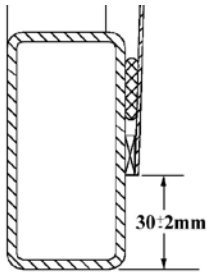	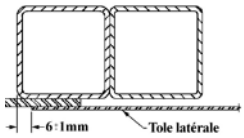
	C)	Perform final adjustment to make sure that side panel is true and square	– 30 mm. ± 2 with reference to bottom tubing – 6 mm ± 1 with reference to vertical tubing	
	D)	Sand rear of side panel 2" wide	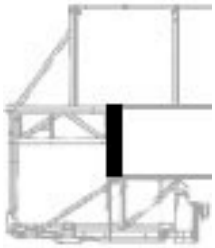	
	E)	Perform tig spot welding (1” apart)	Quantity of "tig spot": 30 minimum.	
3.20	A)	Install pulling equipment at the other end of side panel		
	B)	Make a final adjustment in height		
	C)	Sand front of side panel 2" wide		
	D)	Pull side panel so that panel moves 1/8”	Make sure the equipment pulls along the whole width of side panel	
	E)	Perform tig spot welding	Quantity of "tig spot": 30 minimum.	
3.30	Remove pulling equipment			
3.40	A)	Remove protective film from double-face self-adhesive tape.		

	B)	Compress top and bottom section of side panel	
3.50	A)	Cut excess of side panel. Make sure that cut is parallel with tubing.	
	B)	Grind side panel end to line up with door tubing.	
3.60	To seal each panel end, apply masking tape on each side of side panel joint. Use a caulking nozzle and grey Sikaflex 221 adhesive to fill the cavity between the panel and vehicle structure. Clean using Sika 205. Allow 5 minutes minimum for drying. Wear surgical gloves and smooth down the joint with your finger.		

SECTION 4 ENGINE AIR INTAKE PANEL INSTALLATION		
4.00	Make sure that sealing of structure has been performed properly	
4.05	Prepare vehicle surface as for side panel.	Refer to step # 2.00
4.10	Prepare air intake panel as for side panel	Refer to step # 2.05

4.15	Install foam tape 1/8" X ¼" onto structure, as shown in picture	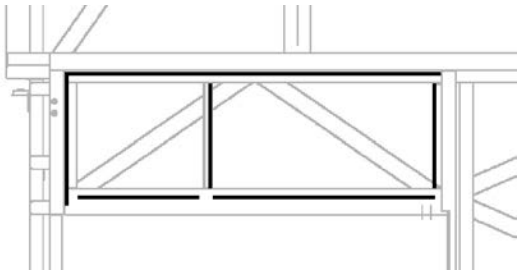
4.20	Install foam tape 1/16" X ¼ onto air intake panel pleat	
4.25	Apply a bead of 252 onto structure as per picture Important: Make sure bead is continuous Triangular bead: 10mm x 8mm	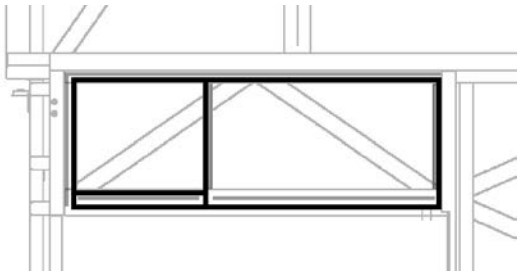
4.30	Install panel onto structure	Use a jig to make sure that panel is lined up with engine door tubing.
4.40	Use a brush to compress Sika bead	

5.00 *	**Finition Joint**		
	A)	Install a protective tape onto the tubing above welding	
	B)	Apply Sika 205 Use a plastic spatula inside a Chix cloth to ensure that Sika 205 reaches as far as the corner. See SAV00001 section C.	
	C)	Apply Sika 252 black at the junction of both tubing. Smooth down the joint	
	D)	Remove protective tape	

9.7.2 Side Crest

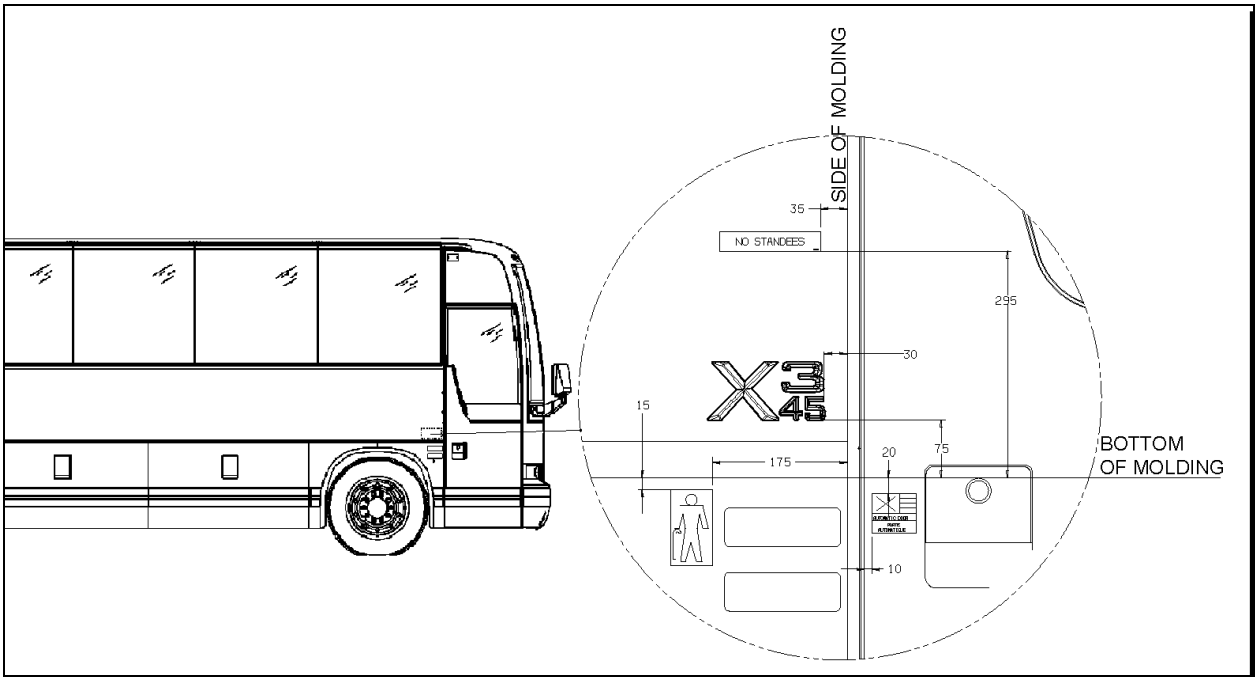

FIGURE 76: SIDE CREST POSITIONING 18639

- Clean vehicle surface using anti-silicone where the side crest and stickers will be applied.
- Using hands apply and compress side crest.
- Apply required stickers.

9.8 BODY PANEL AND WINDOW SPACING

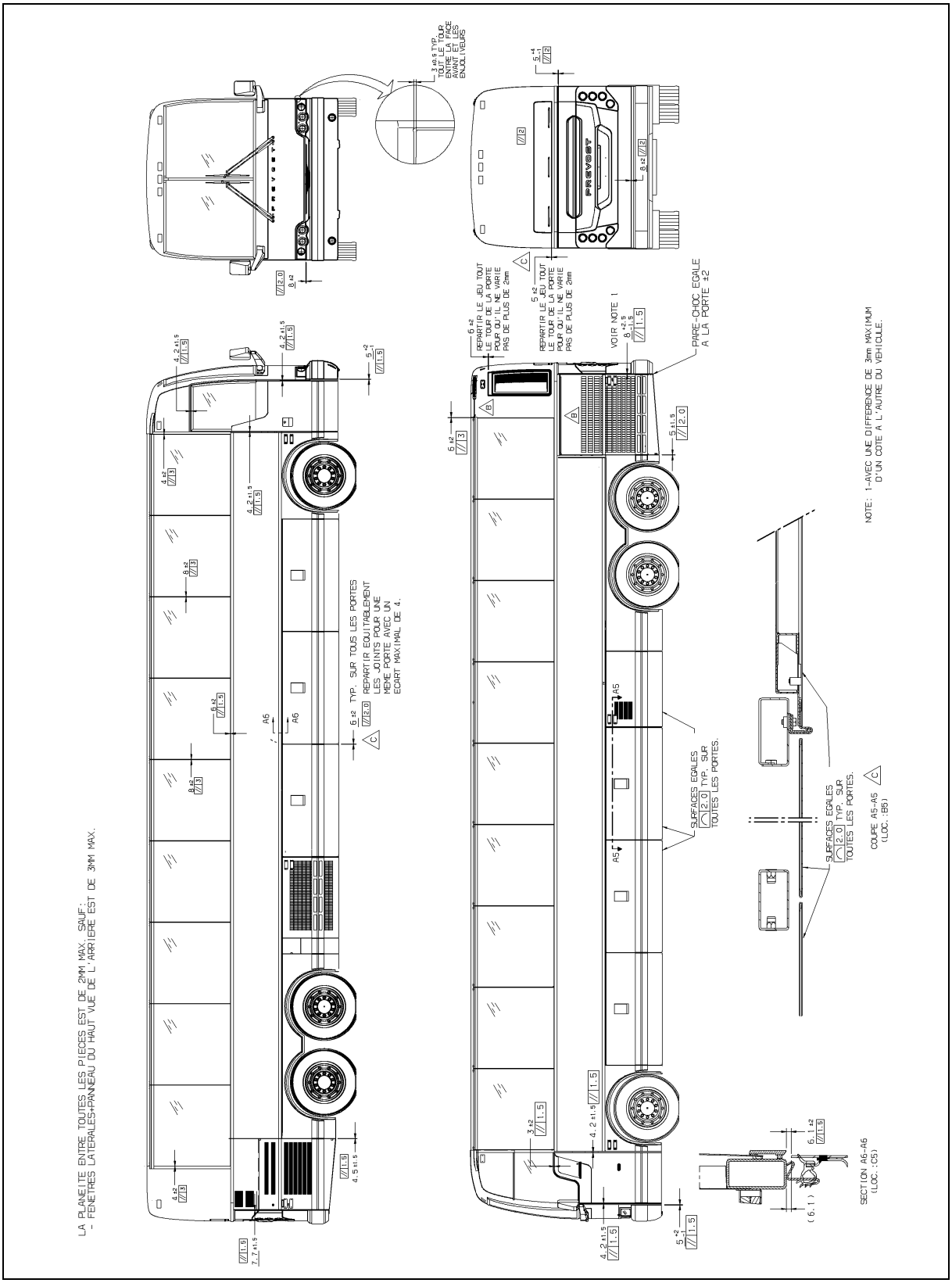

FIGURE 77: BODY PANEL AND WINDOW SPACING 18631

9.9 PASSENGER SEATS

X3 coaches can be equipped with any of 3 basic seat models and installed in a variety of seating arrangements:

1. The *"Tourismo 2"* seat is the base model and is available in heights of 40" (102 cm) and 42" (107 cm). Seating arrangement includes 2 card tables which can be folded and removed, and pivoting seats ahead of each card table. Each pair of seats is built on a welded steel frame fastened to the side wall and on a track-mounted pedestal.
2. The *"Silhouette"* seat is an optional model with each pair also built on a welded steel frame and mounted the same way as the *"Tourismo 2"* seat. Standard seating arrangement with "Silhouette" seat includes 2 card tables and 2 pivoting seats. Seating capacity is the same as with the *"Tourismo 2"* seat.
3. The *"V.I.P."* seat model is an optional seat. *"V.I.P."* seats are mounted on one row of paired seats built on a common frame on one side of the vehicle, and a row of single seats on the other side of the vehicle with an off-center aisle. Each *"V.I.P."* seat has its own set of armrests.

Each seat has a easily removable bottom cushion. Upholstery is clipped on the cushion frame for cleaning or replacement. To remove the fabric, simply unclip from the frame. The *"Tourismo 2"* and *"Silhouette"* seats have 3 armrests. The aisle and center armrests can be folded up and down manually, while the window armrest is fixed.

9.9.1 Rotating Seats

1. Remove 1 wing nut holding each seat bottom cushion from under the seat frame.
2. Lift front part of cushions and remove cushions.
3. Remove 4 wing screws fastening seat assembly to seat frame.
4. Pull seat toward aisle and rotate.
5. Align mounting holes and reinstall 4 wing screws.
6. Reinstall seat bottom cushions with wing nuts.

9.9.2 Removing Fixed Seats

NOTE
Seats on one row are not interchangeable with seats of the other row.

To remove fixed seats, proceed as follows:

1. Remove 1 nut holding each seat bottom cushion from under the front part of the seat frame.
2. Lift front part of cushions and remove cushions.
3. Remove 4 finishing screws holding plastic cover between side wall and seat frame.
4. Remove 2 cap screws, nuts, and washers holding seat frame to side wall and retain the 2 holding brackets. See Figure 78.
5. Remove 2 nuts and washers holding seat frame to pedestal rods. See Figure 79.

NOTE
Bottom end of rod is coated with Loctite and threaded in a steel block which slides in the floor track. Removal of rod is possible if loosened from block. Otherwise, slide rod and block assembly to the front end of track after removing all seats located in front.

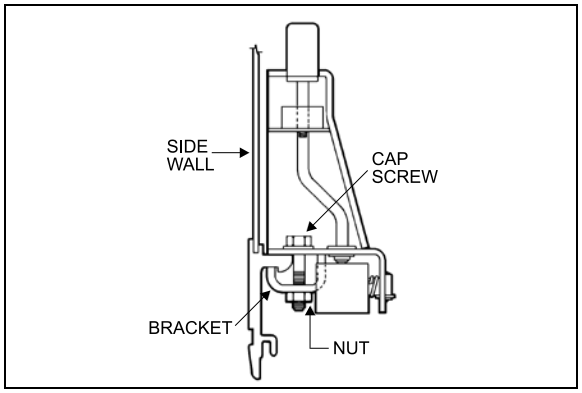

FIGURE 78: ARMREST 18106

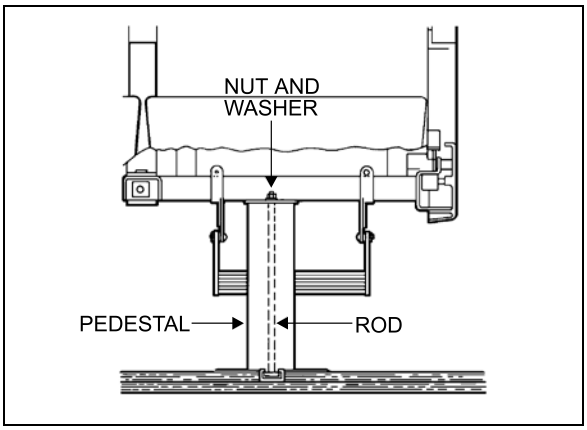

FIGURE 79: SEAT PEDESTAL ASSEMBLY 18107

6. Remove seat assembly.
7. Reverse the above procedure to install seat assembly. Tighten mounting nuts.

TORQUE: 27 lb-ft (37 Nm)

NOTE
On newer vehicles, the rod consists of a carriage bolt inserted in a square plate sliding in the floor track. Removal is possible only by the front or rear end of track.

9.9.3 Upholstery Maintenance

Coach seats are lightweight, with foam-padded backs and cushions. For both appearance and durability, best results are obtained if upholstery is cleaned at regular intervals before dirt, dust and grit have been ground into the fabric. Seat fabric is made of 50% wool, 33% cotton, 9% nylon, and 8% acrylic.

- **Routine Cleaning**

All that is required to remove the dirt is a gentle beating with the hand or the back of a brush. This will bring the dirt to the surface where it is easily removed with a vacuum or brush in the direction of the pile which can easily be recognized by running a hand lightly over the pile. If the fabric becomes excessively dirty, particles of grit will cause gradual wear, reducing the life span of the fabric.

- **Dry Cleaning**

If covers are to be removed for cleaning, dry cleaning is recommended since washing might cause some shrinkage, preventing the covers from being reapplied to the seats without damage. Other than spot cleaning the covers while they are in place, dry cleaning is not recommended, since the resulting fumes could be hazardous in the confines of the coach and the solvent could be detrimental to the foam padding of the seats.

- **Cleaning With Covers in Place**

The most effective and economical method to clean the fabric seat covers is by washing with either an approved foam upholstery cleaner or with a mild household detergent.

Thoroughly vacuum the upholstery. Remove any spots or stains before the seats are washed to avoid a cleaning ring.

Dilute household detergent or liquid foam cleaner according to directions on the container. Pour a small quantity into a flat pan and work into a thick foam with a sponge or brush.

Apply only the foam to the fabric with a sponge or brush. Clean a small area of the fabric at a time with the foam. DO NOT SOAK. Rub vigorously. Sponge the suds from the fabric with a clean sponge or cloth moistened with water. Rinse the sponge or cloth often and change the water when it becomes dirty.

Allow the upholstery to dry completely before the coach goes back into service. To speed up drying, excess moisture can be blown off the fabric with compressed air.

⚠ **CAUTION**
Oil in the air line will soil the fabric. Blow the line clear and test air discharge against a plain white piece of paper. It is also effective to press the edge of a flat hardwood stick down on the cushion and slowly draw it across the fabric.

Even very soiled areas can be returned to their original appearance by a thorough cleaning, but a regular schedule of cleaning that keeps the upholstery reasonably clean at all times will greatly enhance the life span of upholstery.

9.10 TARABUS FLOOR COVERING REPAIR OR REPLACEMENT

On X3-45 coaches equipped with “Tarabus” covering, it is possible to replace or repair this covering. The purpose of this paragraph is to explain the steps to be followed to ensure the best results and adherence.

MATERIAL

Part No	Description	Qty
680028	Adhesive, Tarabus Floor Covering (White)	A/R
684655	Adhesive, Contact (3M)	3.8L
684654	Adhesive, Contact (3M)	18.9L
680532	Sikaflex 221 Gray	A/R

NOTE

Material can be obtained through regular channels.

1. Remove number of passenger seats required to perform repair.
2. Cut and remove damaged section of floor covering.

NOTE

It would be preferable to cut under two rows of seats so that repair is not as noticeable.

3. Clean plywood using a scraper.

NOTE

Make sure that no staples are sticking out beyond surface. Adjacent plywood sheets must be leveled.

4. Fill up holes and imperfections using MAPI PRP 110 then sand.
5. Remove dirt and adhesive residue.

CAUTION

Do not leave floor covering folded down except temporarily during installation.

6. Apply floor covering adhesive (680028) onto plywood using a serrated spreader with 1/8-inch serration. If required, apply contact adhesive (3M) (684655 or 684654) onto aluminum molding and also onto section of floor covering, which will be in contact with molding (refer to Figure 80).

NOTE

Allow adhesive to dry (3 to 5 minutes).

7. Compress floor covering using a roller so as to remove any trapped air bubble.
8. Apply Sikaflex 221 gray sealant (680532) alongside passenger seat fixing tracks (refer to Figure 81).

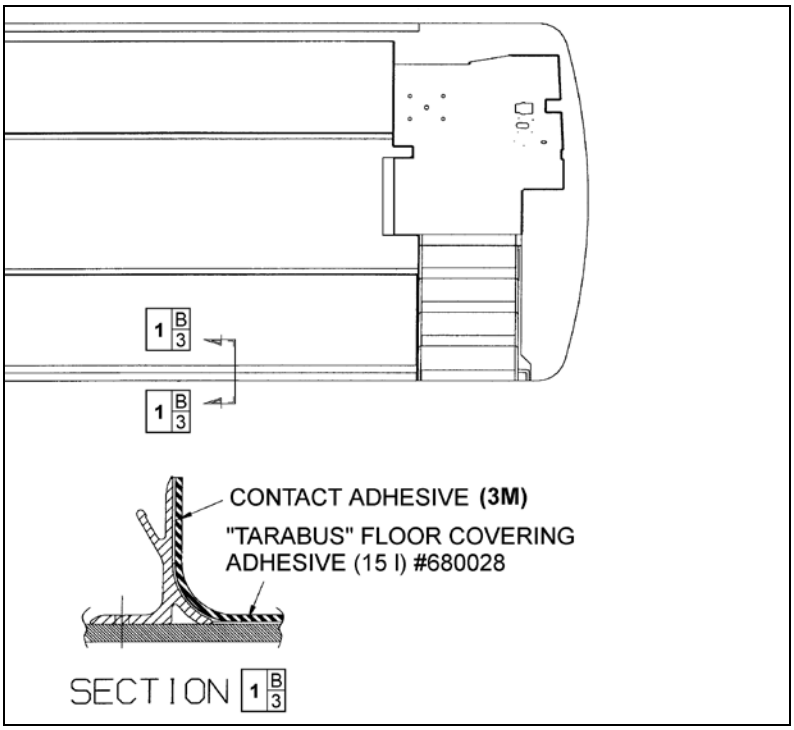

FIGURE 80: TARABUS FLOOR COVERING ADHESIVE APPLICATION 18640

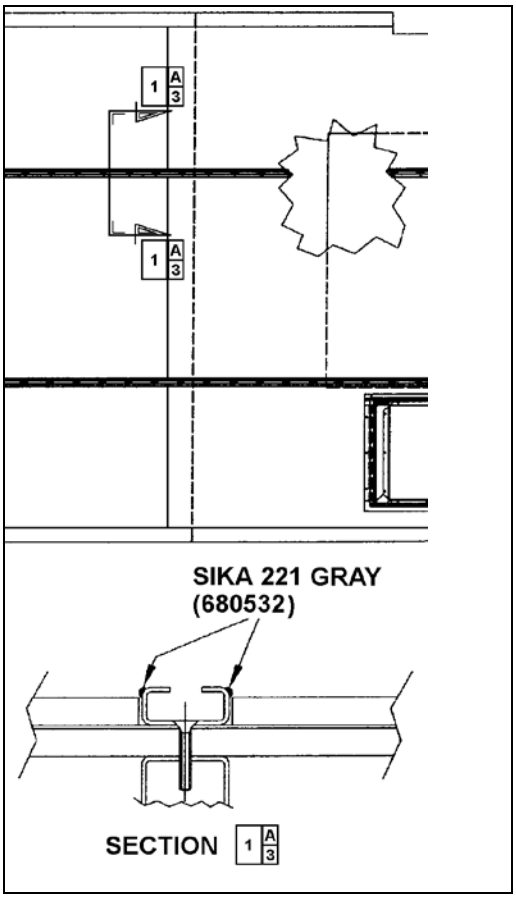

FIGURE 81: APPLICATION OF SIKA 221 GRAY 18641

9.10.1 Front Steps Replacement Procedure

MATERIAL

Part No	Description	Qty
682989	Anti-silicone	A/R
683097	Sika 205 (1 liter)	A/R
685101	Sika Remover 208	A/R
683916	Sika 215 (1 liter)	A/R

1. Cut and remove damaged step(s).
2. Remove dirt and adhesive residue.

NOTE
In wintertime, condensation and cold temperature may greatly influence bonding parameters. Working area must be at a temperature sufficient to prevent reaching condensation point. Mechanically preheat working area (heat lamp or heat gun) or wait until vehicle reaches room temperature.

PREPARATION OF "TARABUS" FLOOR COVERING

1. Sand under step using "Scotchbrite".
2. Clean using anti-silicone (refer to Section A).

Section A Alcohol or Anti-silicone	
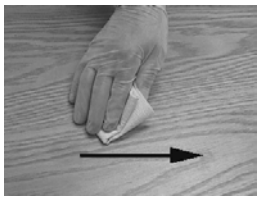 **1. Apply** **CHIX cloth**	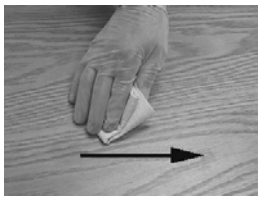 **2. Dry immediately** **Blue cloth**
***3.* Allow drying**	
Mandatory	**Minimum time : Wait for product to evaporate**
	After 2 hours: Start cleaning operation again
Before applying any other product	If surface seems dusty, greasy or with finger marks, start cleaning operation again.

3. Apply Sika Primer 215 (refer to Section D).

Section D Sika Primer 215		
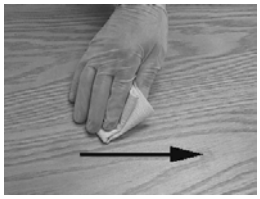	***1.*** **Shake bottle to mix product** ***2.*** **Apply a thin layer**	**CHIX cloth**
3. **Allow drying**		
Mandatory	**215**	**Minimum time : 20 minutes**
		After 2 hours : Remove dust using damp cloth (pure water)
Before applying any other product		If surface seems dusty, dust using damp cloth.
		If surface seems greasy or with finger marks, reactivate with Aktivator.

PREPARATION OF FIBERGLASS

1. Clean using anti-silicone (refer to Section A).
2. Apply Sika 205 (refer to Section B).

Section B Sika 205			
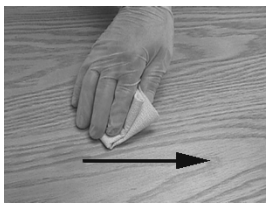	***1.*** **Apply** **CHIX cloth**		
2. **Allow drying**			
Mandatory	**Minimum time**	**- For a smooth surface (aluminum, stainless, steel, fiberglass (gelcoat side), etc.):**	**2 minutes**
		- For a porous surface (fiberglass (non gelcoat side), etc.)	**10 minutes**
	After 2 hours : Reactivate surface with Sika 205		
Before applying any other product		If surface seems dusty, greasy or with finger marks, start operation again.	

X3 VEHICLES FRONT STEPS GLUING

1. Use step nosing to measure and cut necessary length of white safety strip.
2. Use a screw to check depth of countersinking in step nosing. Screw top must not stick out beyond the aluminum surface. Countersink if needed.

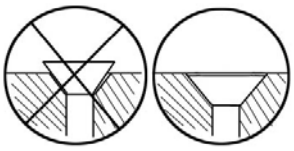

3. Apply some Sika 252 onto the step; make sure to cover the whole surface of the step. Use a serrated spreader with 1/8-inch serration to spread Sika.
4. Apply a bead of Sika 221 onto the perimeter of the step.
5. Install step and press with hands. If Sika overflows, clean with Sika 208. Repeat previous stages for each step if applicable.
6. Remove protective film from double-coated self-adhesive tape located underneath step nosing, position step nosing then press. Drill and fix using screws.

7. Clean top of step nosing using Sika 205 (refer to Section B).

8. Apply some Sika 221 onto white safety strip, spread with a spatula to cover the whole surface.

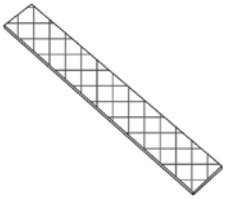

9. Position white safety strip then press using hands. If Sika overflows, clean with Sika 208.

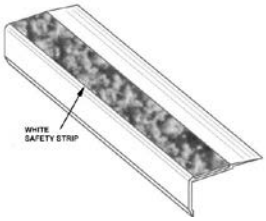

10. Temporarily fix white safety strip with a piece of duct tape, leaving 1 to 2 inches free at each end.

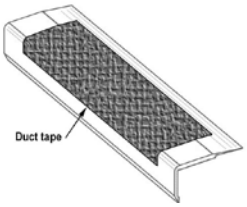

11. Apply some masking tape onto the step perimeter, clean using Sika 205 (refer to Section B) then apply a bead of Sika 252 black. Smooth out the joints then remove masking tape.
12. Install weights onto the steps. Minimum waiting time: 2 hours.

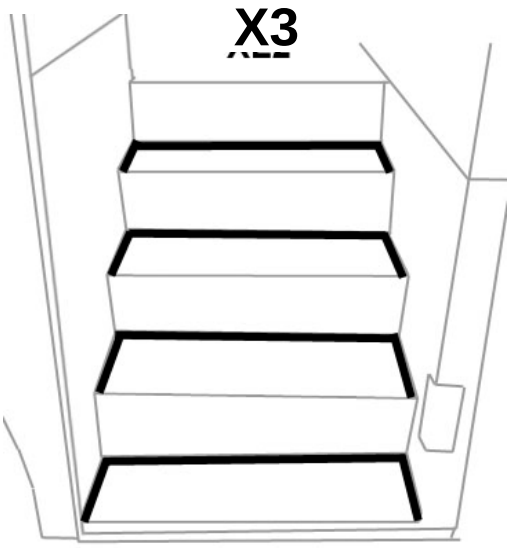

9.10.2 Welding Of Joint Between White Safety Strip And "Tarabus" Floor Covering

1. Pre-heat welding torch;

   Set welding torch to position #4.5 (temperature of 500 °C),

   Heating time: 5 minutes.
2. Before welding, visually ensure that a 1 to 1.5 mm gap exists between white safety strip and "Tarabus" floor covering. Use a knife if this is not the case.

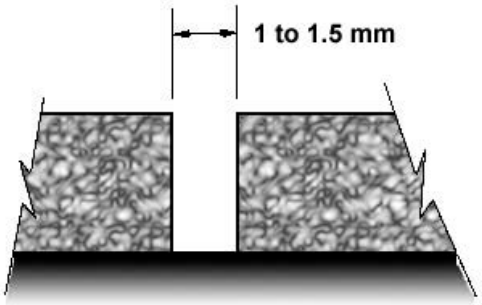

NOTE
There should be no excess of adhesive on top of surfaces, clean if required using "All-Sol".

3. Chamfer the joint.

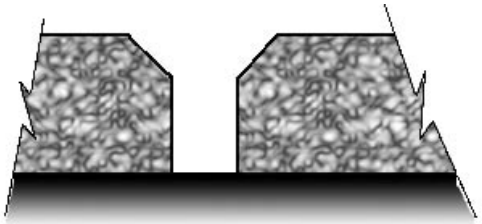

NOTE
The chamfer width must always be less than the filler bead diameter (between 2.5 and 3 mm).

4. Use chamfer knife. **Be careful not to overcut or to cut to the side to prevent damaging "Tarabus" covering.**

5. Add (about 6 inches) some length to the required length of filler bead to make the joint then cut.
6. Take position with welding torch. The proper position is with a slight slope to the rear.

7. Once the welding torch is ready, insert the filler bead into the nozzle and immediately start welding. Move in a regular manner while pressing slightly with torch.

8. The heel of the fast nozzle must not lean against “Tarabus” covering (always parallel to the surface).

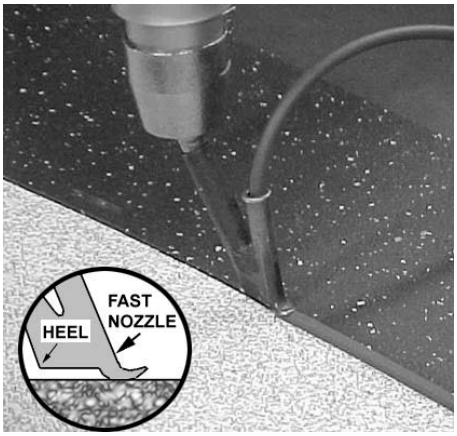

9. Allow cooling down of filler bead (about 5 minutes).

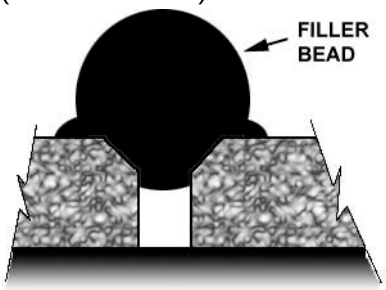

10. Shave filler bead to make it level to the floor. Use supplied knife designed for that purpose.

NOTE
To facilitate the cut, you can spray some soapy water onto the joint.

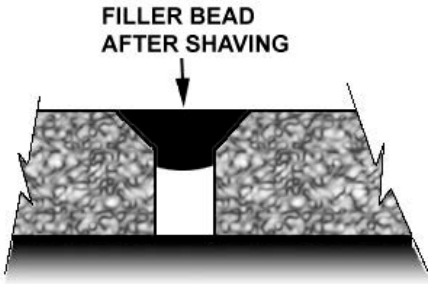

CAUTION
The procedure for turning the torch off must absolutely be followed. If this step is not taken, the element may burn.

11. Set temperature potentiometer to “0” position. Fan will evacuate residual heat. Leave the torch in operation as it is for 3 minutes.

12. Perform adhesion test using the tip of a flat screwdriver; apply a slight pressure on the joint.

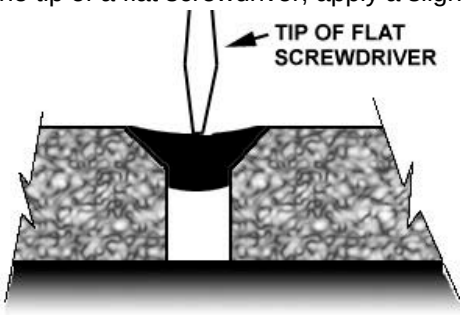

13. If welding was not performed properly, there will a loss of adhesion on one side. If this is the case, repair the joint.

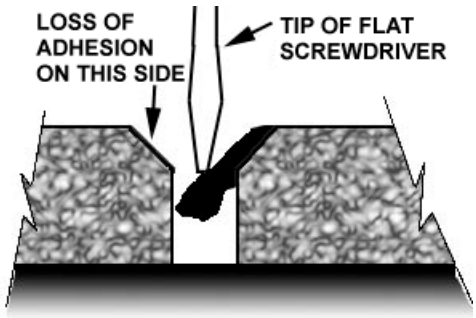

9.10.3 Repair Of A Welded Joint

NOTE
In wintertime, condensation and cold temperature may greatly influence bonding parameters. Working area must be at a temperature sufficient to prevent reaching condensation point. Mechanically preheat working area (heat lamp or heat gun) or wait until vehicle reaches room temperature.

1. Using a knife, remove portion of joint to be repaired.

NOTE
Loss of adhesion may be local. If this is the case, repair may also be local.

2. Chamfer the joint again as indicated in paragraph 6.10.2, Section: Welding Of Joint Between White Safety Strip And “Tarabus” Floor Covering.
3. Re-weld the joint as indicated in paragraphs 6, 7 and 8. Use your thumb to hold the filler bead end.

WARNING
Nozzle is hot.

4. Always add an extra inch of filler bead at the beginning and at the end of repair.
5. Perform steps indicated in paragraphs 9, 10 and 11.

10 X3-45 VIP EXTERIOR FINISHING AND BODY REPAIR

The following procedures explain the steps to be followed for proper repair, installation and replacement for various doors, panels and windows pertaining to X3-45 VIP. The paragraph divides the vehicle into zones to facilitate the search; each zone is then sub-divided into components.

Refer to the appropriate zone then component for complete procedure.

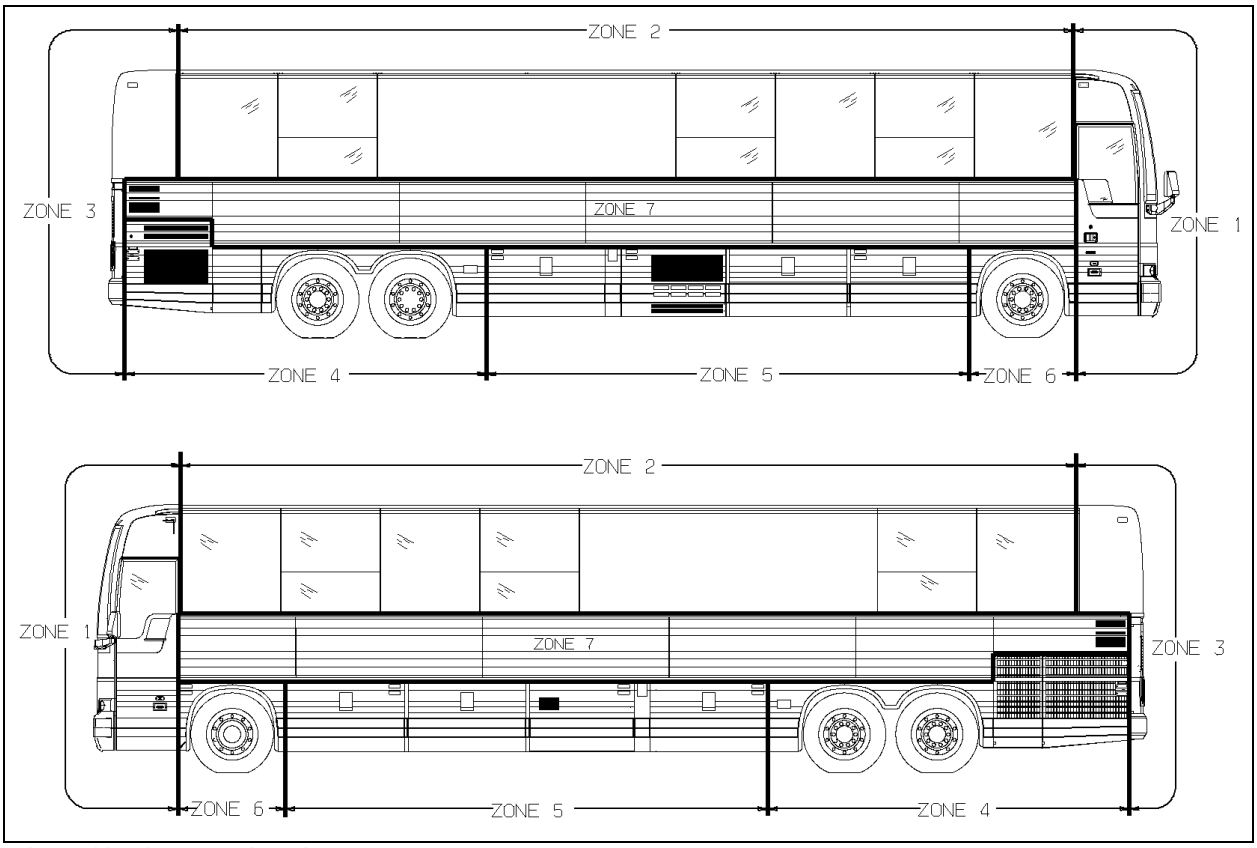

FIGURE 82: X3-45 VIP ZONING

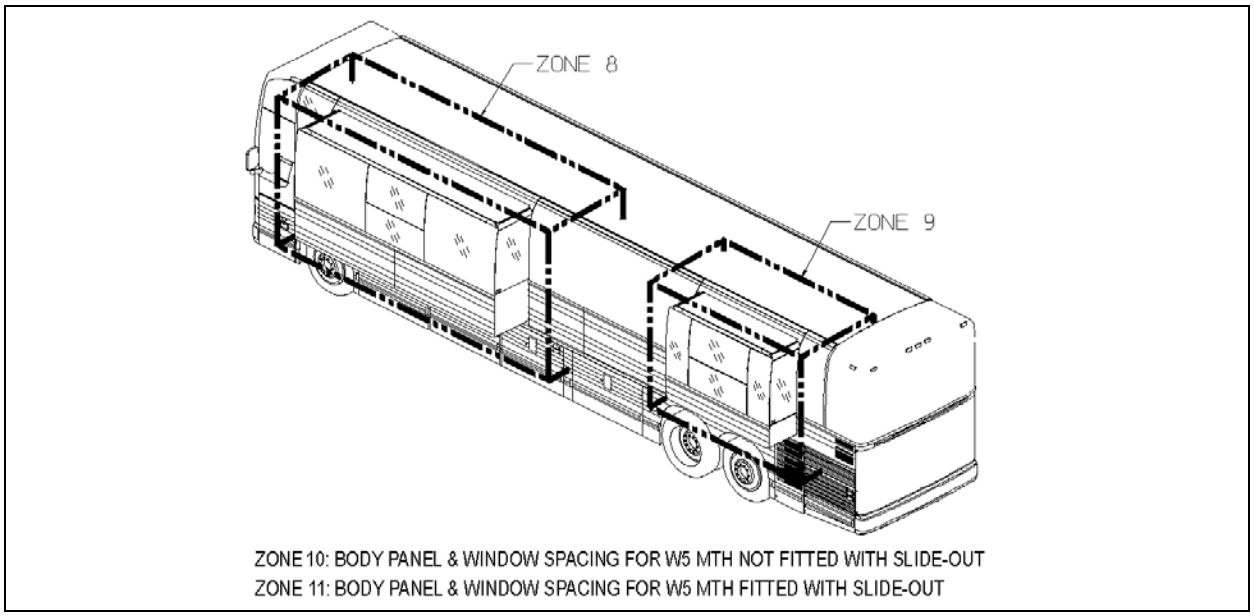

FIGURE 83: X3-45 VIP FITTED WITH SLIDE-OUT

10.1 ZONE 1

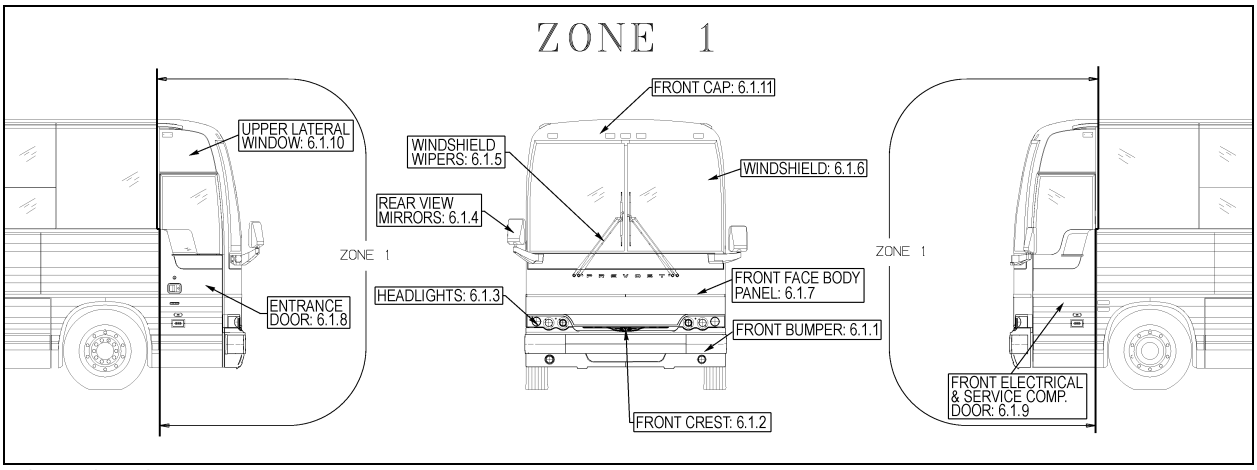

FIGURE 84: ZONE 1

10.1.1 Front Bumper

The front bumper can be tilted downward to give access to the bumper compartment. Pull the release handle located inside front service compartment to unlock. Tilt down the entire bumper assembly to access the compartment. Push the bumper back up firmly in place to lock in position.

Two people are required to remove and install the front bumper. Safely support the bumper and remove the two bolts on each bumper side to separate the bumper from the spare wheel compartment door. To install bumper, reverse the removal procedure.

WARNING

Front bumper is heavy. Use proper lifting equipment to support the bumper during the removal and installation operations to avoid personal injury.

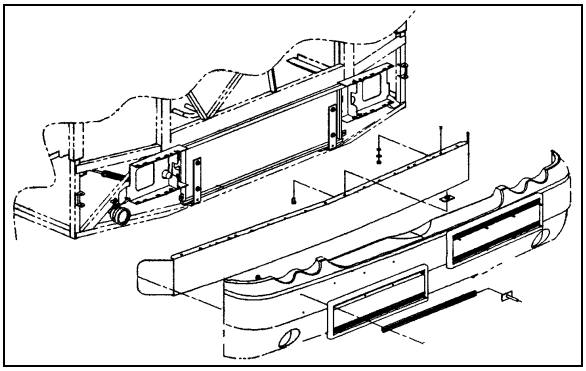

FIGURE 85: FRONT BUMPER REMOVAL

WARNING

The compartment behind the bumper is not designed for storage. Never store loose objects in this compartment since they can interfere with the steering linkage mechanism.

Use care when opening or closing the reclining bumper compartment to prevent personal injury.

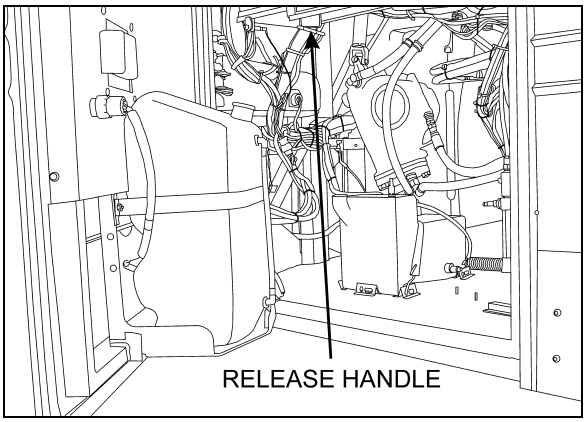

FIGURE 86: FRONT BUMPER RELEASE HANDLE 18613

For gluing of front bumper panel refer to procedure **SAV00198** .

10.1.2 Front Crest

* Use a Chix cloth and anti-silicone to clean the surface where the crest will be applied.

CAUTION

Do not exceed the crest dedicated surface.

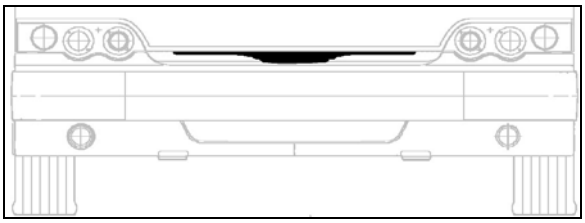

* Peel the back from the self-adhesive crest side pieces.

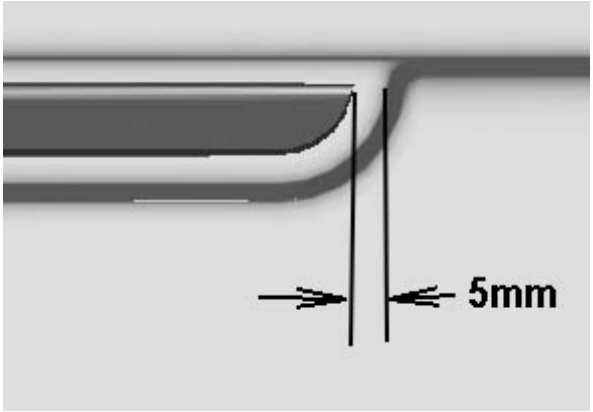

* Peel the back from the self-adhesive crest center piece. Center crest and apply.

* Compress the crest three pieces using your hands.

10.1.3 Headlights

Refer to Paragraph Headlights, included in Section 06: Electrical of the Maintenance Manual for complete information on headlights.

10.1.4 Rear View Mirrors

Your vehicle is equipped with two exterior mirrors.

The mirrors may be equipped with an optional electric heating system which serves to minimize ice and condensation on the mirror glass in extreme weather conditions. Integral thermostats are installed in both mirrors to avoid continuous heating. Use the appropriate switch on the dashboard to activate the defroster system on both mirrors simultaneously. The mirrors can easily be adjusted by using the remote controls located on the L.H. side control panel. The mirrors have easy to replace glass in case of breakage. Remote control motors can also be replaced.

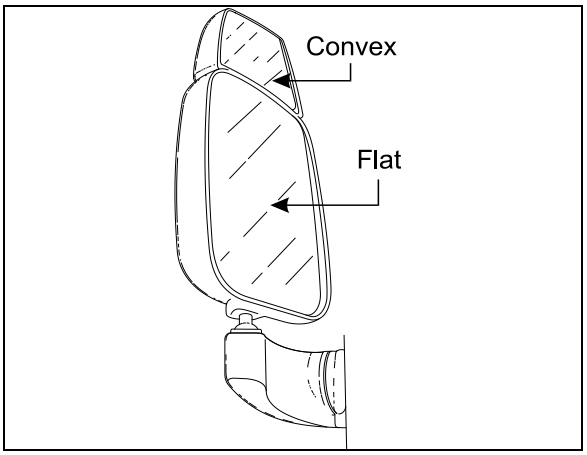

FIGURE 87: REAR VIEW MIRROR (RAMCO) 18398A

❖ **Adjustment**

At the base of the mirror arm, loosen the mounting bolt to swing arm in or out.

To pivot the mirror head, loosen the setscrews on each side of the ball stub at the base of the mirror head to facilitate the adjustment.

❖ **Disassembly**

At end of mirror arm, loosen the setscrews to relieve tension on the ball stem. Remove the ball stem from the arm.

Remove the four screws fastening the mirror arm base to the coach.

❖ **Assembly**

Mount the mirror arm base to the coach. Insert the ball stem into the mirror arm and tighten the socket setscrews.

NOTE
Position the ball cup halves so the joint between them lies on the centerline of the arm. Ensure that the setscrews are not on the joint between the cup halves.

❖ **Replacement of Mirror Glass**

Remove the broken glass.

Position new glass in mirror head and press to lock the Velcro in place.

❖ **Heated / Remote Controlled Rear View Mirrors**

Heated/remote controlled external rear view mirrors may be provided to prevent the mirrors from frosting up in cold weather.

The remote controlled external rear view mirrors attach to support arms using a pivot collar secured by setscrews. Loosening the setscrews allows the whole head assembly to turn on the support arm for initial adjustment. A mounting bolt and washer hold the arm support to the mounting bracket. The arm support can be moved to position the mirror head into or away from the coach body.

The mirror heat switch is located to the left of the driver on the dashboard. This switch must be activated before the mirror heating element will energize. Once energized, the mirror heating element is kept at a sustained temperature (between 60-80°F) by a thermostat. Refer to wiring diagram annexed in the technical publication box.

CAUTION

Do not attach stick-on type convex mirror accessories to the heated mirror glass. This could impede uniform heat distribution on the mirror surface which could break the mirror.

- Mirror Control

The remote control pointer knob(s) for the mirrors is (are) mounted on the L.H. side control panel. The harness to the mirror head runs through the arm support. The remote motor is mounted to the mirror head behind the mirror glass.

Turn pointer knob to the left for mirror head adjustments and to the right for convex mirror adjustment, then push down on either of the button's (4) sides to adjust the selected mirror viewing angle.

- Disassembly

At end of mirror arm, loosen the setscrews to relieve tension on the ball stud. Remove the ball stud. Remove the ball stud from the arm and gently pull the harness out until the connector is exposed.

Remove the four screws fastening the mirror arm base to the coach. Slide the harness free of the mirror arm base.

- Assembly

Attach a stiff wire (snake) to the end of the harness and insert the wire through the mirror arm base and arm, gently pull the harness through the arm and disconnect the "snake".
Connect the mirror head harness. Insert the harness connector back into the mirror arm.
Insert the ball stud into the mirror arm and tighten the socket setscrews.

NOTE

Position the ball cup halves so the joint between them lies on the centerline of the arm. Ensure that the setscrews are not on the joint between the cup halves.

- Convex & Flat Mirror Removal

The mirror glass assembly is mounted to the control mechanism or to mirror base with Velcro strips. Remove the mirror glass by gently pulling the lens to release the Velcro. Disconnect the heater grid at the two connectors.

Connect the connectors of the new mirror's grid to the harness. Install the lens by positioning the lens in the mirror frame and pressing to lock the Velcro in place.

10.1.5 Windshield Wipers

Refer to Paragraph 23.7 Windshield Wipers and Washers, included in Section 23: Accessories of the Maintenance Manual for complete information on windshield wipers.

10.1.6 Windshield

For the removal or installation of windshield, you will need:

- A rope,
- A plastic spatula to lift the rubber seal lip,
- A metal rod or screwdriver to clean the seal groove,
- A filler insertion tool,
- Goggles and protective gloves.

  - From inside of vehicle, remove center post and interior finishing panels surrounding the windshield. In this case, we are replacing the R.H. side windshield.
  - From outside of vehicle, remove filler located inside rubber seal to ease damaged windshield removal.

- From inside of vehicle, push against the top L.H. side corner of windshield for the removal of a R.H. side windshield. If the L.H. side windshield had to be removed, you would have to push against the top R. H. side corner.

NOTE
We are referring to the L.H and R.H. side as viewed from the inside of the vehicle.

- At the same time, another person gradually lifts the rubber lip from the vehicle exterior using a plastic spatula from top to bottom.
- Remove the entire damaged windshield and broken glass if applicable.
- If applicable, using a screwdriver or metal rod, remove black butyl sealant residue from rubber seal then clean with Sika 205.

❖ Windshield Installation

NOTE
Rubber seal may have to be replaced if it was used on several windshield replacements.

- Spray rubber seal with soapy water to ease windshield insertion.
- Insert rope into rubber extrusion leaving enough length at each corner to make a loop. Spray soapy water onto rope and rubber extrusion (Figure 88).
- Slide windshield into rubber seal groove starting with the bottom curved side edge. Using a plastic spatula, move the rubber seal lip aside to gradually insert the windshield into the groove.
- Spray soapy water on a regular basis to ease this operation.
- Using the same type of plastic spatula, repeat the same operation from inside of vehicle, gradually inserting the windshield into the groove.

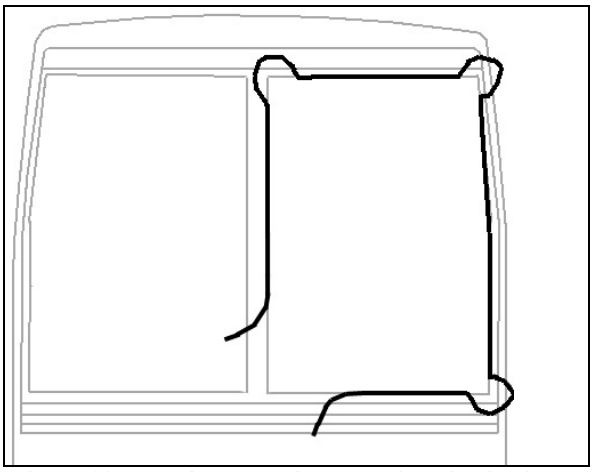

FIGURE 88: WINDSHIELD INSTALLATION USING ROPE

NOTE
Make sure windshield bottom edge is well inserted into the rubber seal groove before proceeding with the sides.

- Then, working from both sides of windshield bottom to top, gradually move the rubber seal lip aside to insert the windshield into the groove. Use also soapy water on the inside of vehicle to insert the windshield into the rubber seal groove.
- Insert the top curved corner then finish with the top of windshield.
- At the top of windshield, clean surface between fiberglass and rubber extrusion using Sika 205.
- Apply Sika 221 black (Figure 89) between fiberglass and rubber extrusion
- Spray filler and rubber seal groove generously with soapy water.
- Using the special filler insertion tool, insert the filler into the rubber seal groove.
- Gradually insert filler into the rubber seal groove ensuring to leave a 2 inch excess length at the filler extremity.
- Every 6 inches or so, it is important to compress the filler due to its tendency to contract during drying process.
- When filler insertion is almost complete, cut filler leaving ¼” of excess length to thwart filler contraction over time then insert filler into groove.

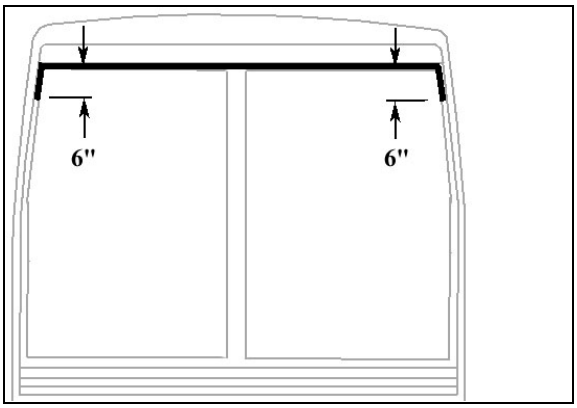

FIGURE 89: APPLICATION 0F SIKA 221 BLACK

- Reinstall center post and interior finishing panels.
- Clean windshield surface of butyl residue.

10.1.7 Front face Body Panel

For removal of front face body panel and molding, you will need:

Drill with drill bits,
Lever or similar tool,
Olfa knife,
“C”-clamp,
Razor sharp window scraper.

❖ **Front Face Molding Removal**

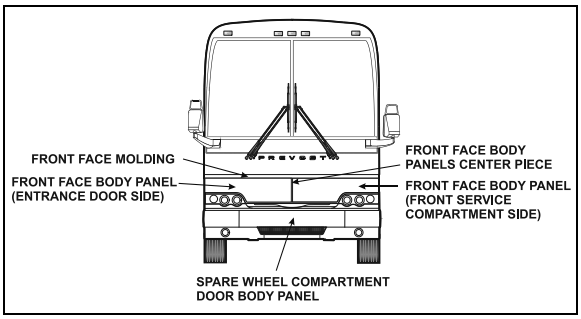

FIGURE 90: VIEW OF FRONT FACE

- First of all, pry loose the front face molding using the lever. Save molding if only the body panel needs to be changed.
- Using the Olfa knife, cut the Sika bead and the double-face self-adhesive tape. Remove the Sika bead and self-adhesive tape residue with the scraper.

❖ **Front Face Body Panel Removal**

- Using a drill and a 1/8” drill bit remove the rivets fixing the vertical molding. The stainless steel molding is located on the entrance door or service door frame side depending on body panel to be removed.
- Using the Olfa knife, cut the Sika bead and the double-face self-adhesive tape. Remove the Sika bead and self-adhesive tape residue with the scraper.
- Pry loose the front face body panel using the lever.
- While somebody cuts the Sika bead and double-face self-adhesive tape, another person pulls the body panel using the “C”-clamp to exert tension.
- Using the window scraper, remove any Sika bead or self-adhesive tape residue left on fiber glass surface.

❖ **Front Face Molding Installation**

For gluing of front face molding, refer to procedure **SAV00212** .

❖ **Front face Body Panel Installation**

For gluing of front face body panels, refer to procedure **SAV470047** .

10.1.8 Entrance Door

For the removal of entrance door body panel, you will need:

Pneumatic hammer tool (Zip Gun);
Razor sharp window scraper;

- Before removing body panel, you can to ease repair uninstall entrance door from vehicle. If applicable, remove reflector, keyless system keyboard and cornering light.
- You must also remove horizontal finishing molding located underneath the window. This molding is glued and will have to be replaced because it will be damaged at removal.
- Remove interior finishing panel to access rub rail fixing bolts, then remove rub rail.
- Using the “**Zip Gun**”, cut Sika bead located ¼ inch (7-8 mm) from each body panel edge and around cornering light.
- Separate body panel from door.
- Remove from door surface Sika bead and double-face self-adhesive tape residue using a razor sharp window scraper.

- Use a Chix cloth and anti-silicone to remove any dust or residue.

For assembly, gluing or finishing joints of entrance door, refer to procedure **SAV280020** .

For gluing of entrance door horizontal finishing molding, refer to procedure **SAV00213** .

For the installation of entrance door, refer to procedure **SAV280022**.

10.1.9 Front Electrical & Service Compartment Door

For the removal of front electrical & service door body panel, you will need:

Pneumatic hammer tool (Zip Gun);
Razor sharp window scraper;

- Before removing body panel, you can to ease repair uninstall front electrical & service door from vehicle. If applicable, remove reflector and cornering light.
- You must also remove horizontal finishing molding located underneath the window. This molding is glued and will have to be replaced because it will be damaged at removal.
- Remove interior finishing panel to access rub rail fixing bolts, then remove rub rail.
- Using the "**Zip Gun**", cut Sika bead located ¼ inch (7-8 mm) from each body panel edge and around cornering light.
- Separate body panel from door.
- Remove from door surface Sika bead and double-face self-adhesive tape residue using a razor sharp window scraper.
- Use a Chix cloth and anti-silicone to remove any dust or residue.

For assembly, gluing or finishing joints of front electrical & service compartment door, refer to procedure **SAV280021**.

For gluing of driver's window, refer to procedure **SAV290013**.

For gluing of front electrical & service compartment door horizontal finishing molding, refer to procedure **SAV00213**.

For the installation of front electrical & service compartment door, refer to procedure **SAV280022**.

10.1.10 Upper Lateral Window

For the removal of driver's window or upper lateral window, you will need:

Pneumatic hammer tool (Zip Gun);
Razor sharp window scraper;
"Olfa" knife;
Face shield.

- In the case of driver's window only, open front service compartment door.
- Mark the position of the driver's window for future reference.
- From inside of vehicle, cut Sika bead around window perimeter using a "Zip gun" while another person hold the window from the outside.

NOTE
Wear ear plugs during this operation.

- Then, move outside of vehicle and cut Sika bead to free window while somebody else hold the window from the inside.
- Carefully remove window from frame, ask for help if needed.
- Using a razor sharp window scraper, remove from window frame Sika bead and double-face self-adhesive tape residue.
- First of all, check Sika 205 cleaner expiration date.
- Before applying Sika cleaner, fold "Chix" cloth twice for proper width.
- Apply an even coat onto the inside of window frame and allow drying for 2 minutes (maximum 2 hours).
- Discard waste according to applicable environmental regulations, use dangerous waste containers.
- Apply masking tape before applying Sika glue to protect paint and adjacent window during surface treatment.

For gluing of upper lateral window, refer to procedure **SAV290016**.

10.1.11 Front Cap

The fiberglass front cap does not need any maintenance except painting as needed. It is held in place with adhesive. If ever it has to be

replaced, make an appointment at a Prevost service center near you. For minor damages, refer to paragraph 4 "Common Fiberglass Repair procedure" and paragraph 5 "Common Painting Procedure".

10.2 ZONE 2

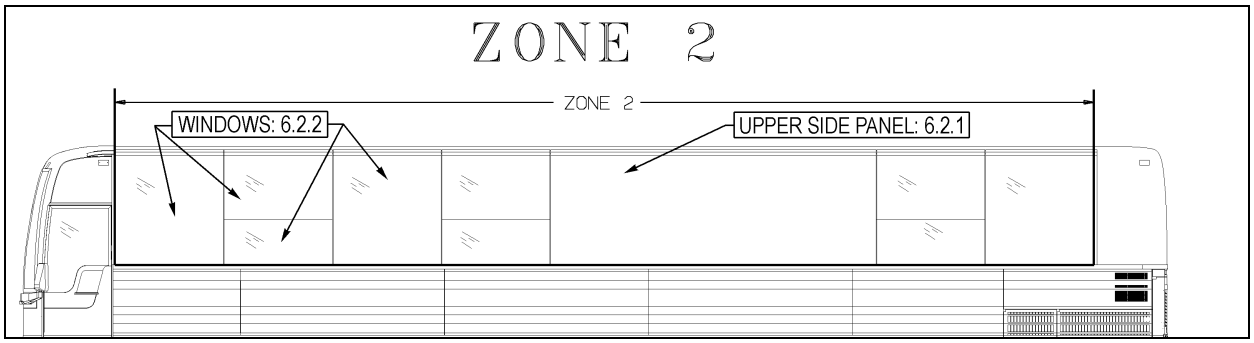

FIGURE 91: ZONE 2

10.2.1 Upper Side Panel

For structure preparation, refer to procedure **SAV00035**.

For installation of upper side panel neoprene foam tapes, refer to procedure **SAV00036**.

For installation of upper side panel, refer to procedure **SAV00041**.

10.2.2 Fixed Windows

Depending on the method chosen for fixed side window removal or installation, you may need:

* Drill equipped with a sharp pointed rod into which a small hole was drilled;
* Razor sharp window scraper;
* Braided windshield wire and a pair of handles;
* Gloves, goggles or face shield.

Fixed Window Removal

1st Method

NOTE
This method is used only in the case of a regular fixed side window. For the fixed upper portion of awning or sliding windows, you must use method number 2.

- o Apply a sticky plastic film onto all of window outside surface for safety reason.
- o Using a drill equipped with the special sharp pointed rod, drill through the window seal into one of the bottom corners, from a 30º angle with reference to the vehicle.
- o This procedure requires accuracy and it is possible not to succeed on the first attempt. From the inside of vehicle, a second person ensures the rod passes through.
- o Remove the rod; thread the wire into the small hole. Reinsert the rod and the wire into the hole far enough so that the person inside the vehicle can pull the rod using a pair of pliers.
- o Attach the wire ends to the specially designed handles.
- o Pull in turn from the inside and the outside of vehicle to gradually cut the Sika bead on the window perimeter.
- o When you reach top corner, detach wire from the outside handle, secure it to a fish wire or rod and thread it underneath the aluminum molding behind the rivets.
- o Detach wire from fish wire and continue cutting using the handle.
- o Cut Sika bead until you come back to starting point, then you can remove the window by carefully pushing it out from the inside of vehicle.

2nd Method

- o Apply a sticky plastic film onto all of window outside surface.
- o To limit as much damage as possible, remove any interior molding in the way. Install a plastic film on the window interior surface and secure using masking tape onto all of window perimeter.

NOTE

Do not stretch plastic film and leave enough play to be able to push window out without tearing the plastic film.

- Using a ball peen hammer, hit one of the window bottom corners from the **outside**.
- Carefully push window out and lift it up sufficiently to separate it from the aluminum molding.
- Attach the windshield wire to a fish wire and thread it underneath the aluminum molding behind the rivets.
- Detach wire from fish wire and continue cutting using the handle.
- Make a notch at each window top corner to make sure you pass underneath the remaining pieces of glass.
- Remove the aluminum molding and clean up the frame using the window scraper.

For gluing of lateral fixed window behind driver, refer to procedure **SAV00046**.

For gluing of lateral fixed half-window, refer to procedure **SAV00045**.

For the installation of awning or sliding window, refer to procedure **SAV00038**.

For gluing of lateral fixed window, refer to various procedures: **SAV00037** for gluing vertical and bottom rubber seals; **SAV00043** for the installation of lateral fixed window and **SAV00044** for making the Simson joint around fixed windows.

10.2.3 Electric Awning Windows

The electric awning windows are connected directly on the batteries 24 V DC terminal block. As a result, they can be operated regardless of the state open or close of the master switch.

Window Removal

Replacement awning window does not include a new motor. If in working order, transfer the motor of the replaced window to the replacement window. If not, the motor can be bought separately. When replacing the window, keep the components in working order as spare parts.

1. Push the vertical latch handle downwards to release the track and then open the window using the horizontal latch handle.
2. Take out the screw at the lower end of the track to let free the swiveling arm roller.
3. Unplug connectors. Dismount the gas spring from the window.
4. Loosen the set screws #5 (Figure 92) (rotate the arm to get to the second set screw) and disengage the swiveling arm from the motor shaft extension.
5. Push the glass window out ninety degrees (90°).

CAUTION

The window may fall out.

6. The window is free and can be unhooked.
7. Reverse procedure to install a new one.

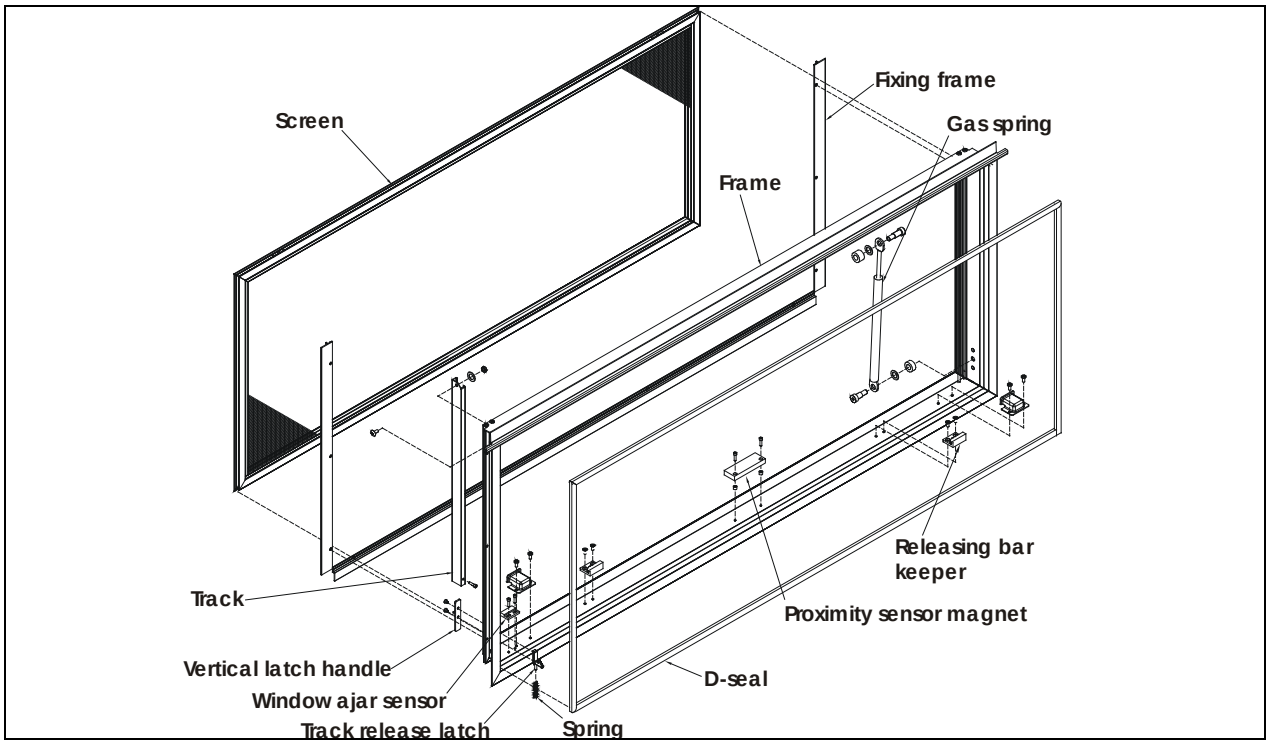

FIGURE 92: ELECTRIC AWNING WINDOW EXPLODED VIEW (FRAME) 18586

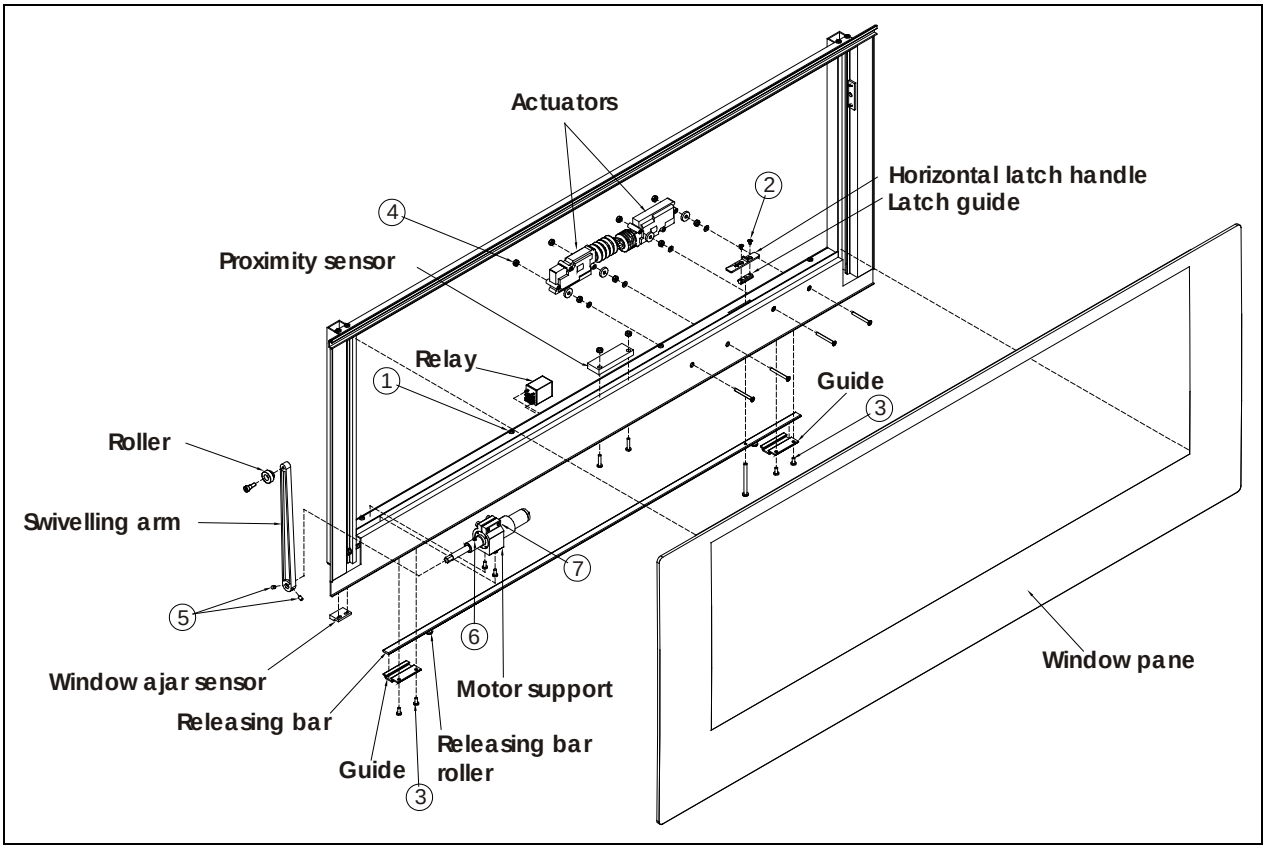

FIGURE 93: ELECTRIC AWNING WINDOW EXPLODED VIEW (SASH) 18583

Actuator Replacement

1. Push the vertical latch handle downwards to release the track and then unlatch the window using the horizontal latch handle.
2. Remove actuator access cover by taking out screws #1 (8x).
3. Take out screws #2 (2x) and remove horizontal latch handle and guide.
4. Take out the guide screws #3 (4x) and remove releasing bar.
5. Unplug connectors from defective actuator, unscrew nuts #4 (2x) and remove the actuator.
6. Reverse operations for reinstallation.

Motor Replacement

1. Push the vertical latch handle downwards to release the track and then unlatch the window using the horizontal latch handle
2. Take out the screw at the lower end of the track to let free the swiveling arm roller.
3. Remove actuator access cover by taking out screws #1 (8x).
4. Loosen the set screws #5 (rotate the arm to get to the second set screw) and disengage the swiveling arm from the motor shaft extension.
5. Unplug motor connector and dismount motor and support assembly.
6. The shaft extension is glued to the motor shaft. It has to be heated to break the binding to permit removal. Loosen set screw #6 and remove the shaft extension. Also loosen screw #7 and remove motor from the support.

Reverse operations for reinstallation.

ELECTRIC AWNING WINDOW – CONVERTER CHECKLIST	
Check the electrical circuit & proximity sensor	A: The latching system will not operate without power. Is there electrical power to the latching circuit? The horizontal latch handle, on the sill sash will be seen to move if there is power on this circuit, or it can be checked with an electrical tester. If there is no power to this circuit when the window is closed and either rocker switch are switched "ON", there is a problem with the electrical system. B: The Proximity Sensor on the sash may not be switching power to the latching circuit if the magnet is not getting close enough to the switch OR the Proximity Sensor may be broken (or stuck in one position). Is the proximity sensor switching when the window is closed?
Check the release force required to operate the horizontal latch handle	A: If the pull force required to move the latch is more than 20lbs the window will not latch properly. Average pull force during testing by manufacturer is 12lbs -15lbs. What is the force required to release the handle? Check using a force gauge (same test done by manufacturer).
Check Installation	A: If the window is too tightly installed OR if the sequence for tightening the clamping frame screws Is incorrect the window may not close properly. Was the window installed correctly? Was the correct sequence (see below) used when tightening the clamping frame screws? 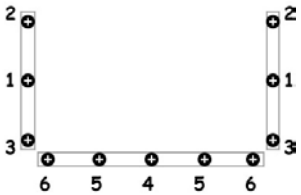 B: Removing the shipping blocks before the window is installed can create major problems.

	Were the shipping blocks in place during installation? C: Failure to remove the shipping blocks after installation can create interference between sash and frame. Have the shipping blocks been removed after installation? D: The window is misaligned or not installed squarely. Is there interference with any coach parts? Is there proper clearance between the bottom of the outer glass and the belt-line trim / seal?
Check for missing parts or misaligned parts	A: The frame and sash are misaligned. Is there any interference between the sash and frame? Is there clearance between the sash and the rocker switch covers? B: Releasing bar guides are missing. Check that the releasing bar guides are installed. There should be 4 installed on H windows, and 3 installed on X3-45 VIP windows.

10.2.4 Electric Sliding Windows

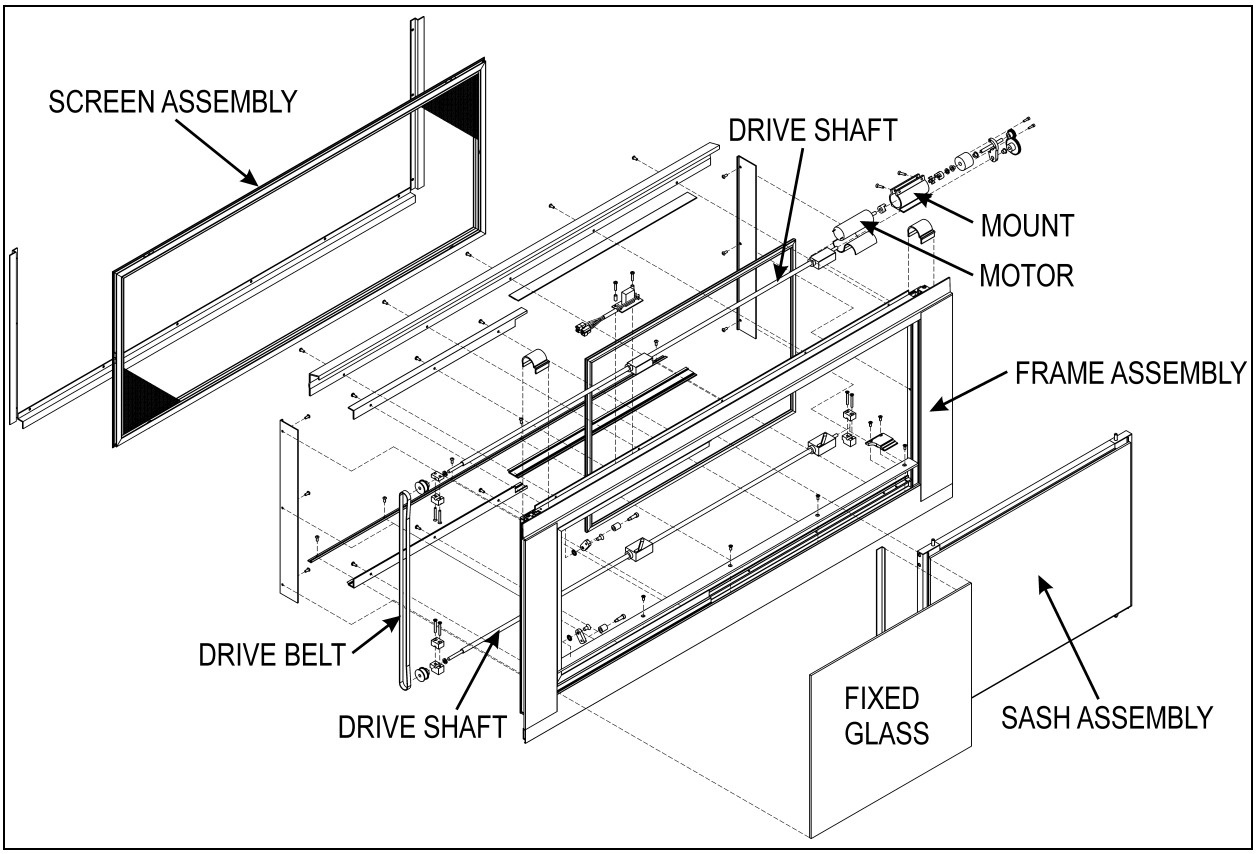

FIGURE 94: ELECTRIC SLIDING WINDOW EXPLODED VIEW

Sash Removal

1. Remove the Screen Assembly
2. Pull down on both release latches simultaneously and rotate the sash inwards approximately 10 degrees.(Figure 95)

FIGURE 95: REMOVING THE SASH

3. Lift the sash up and out to disengage the bottom of the sash from the window frame. (Figure 96)

FIGURE 96: DISENGAGING THE BOTTOM OF THE SASH

Installation

1. Align the leading edge of the slot on the lower cam follower block with the sash stop. Use the power toggle switch to obtain the correct alignment. (Figure 97)

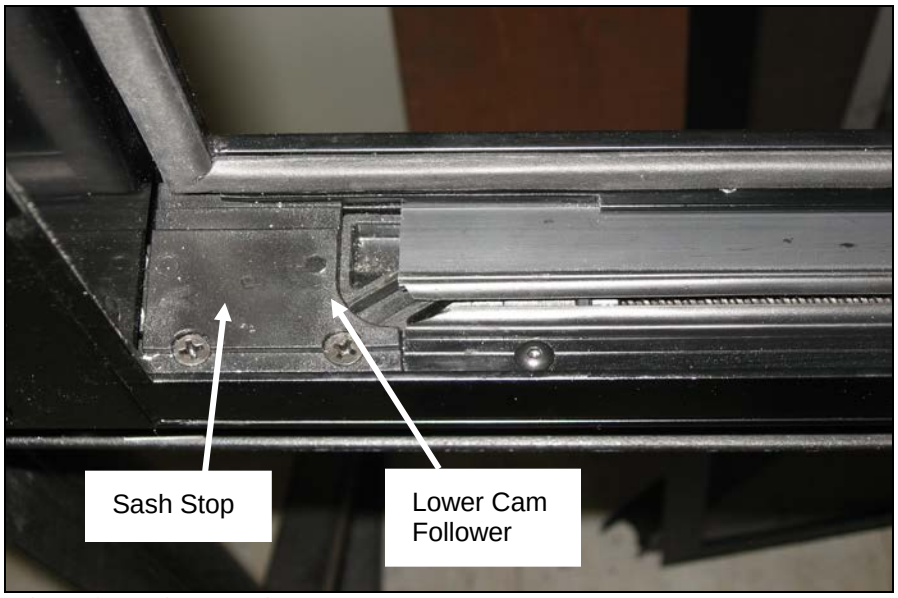

FIGURE 97: PROPER ALIGNMENT

2. Position the left hand lower corner of the sash over the front cam follower block (Figure 98)

FIGURE 98: POSITIONING THE LOWER LEFT CORNER OF THE SASH

3. Engage the sash pin with the leading edge of the slot of the cam follower block. Do the same at the rear of the sash.
4. Pull down on the release latches and rotate the sash inwards until it is parallel with the window frame.
5. Release the latches to engage the latch pins with the upper cam follower blocks.

6. Confirm that both latches are in the closed (latched) position. The upper edge of the latch opening must be aligned with upper edge of the sash opening (Figure 99)

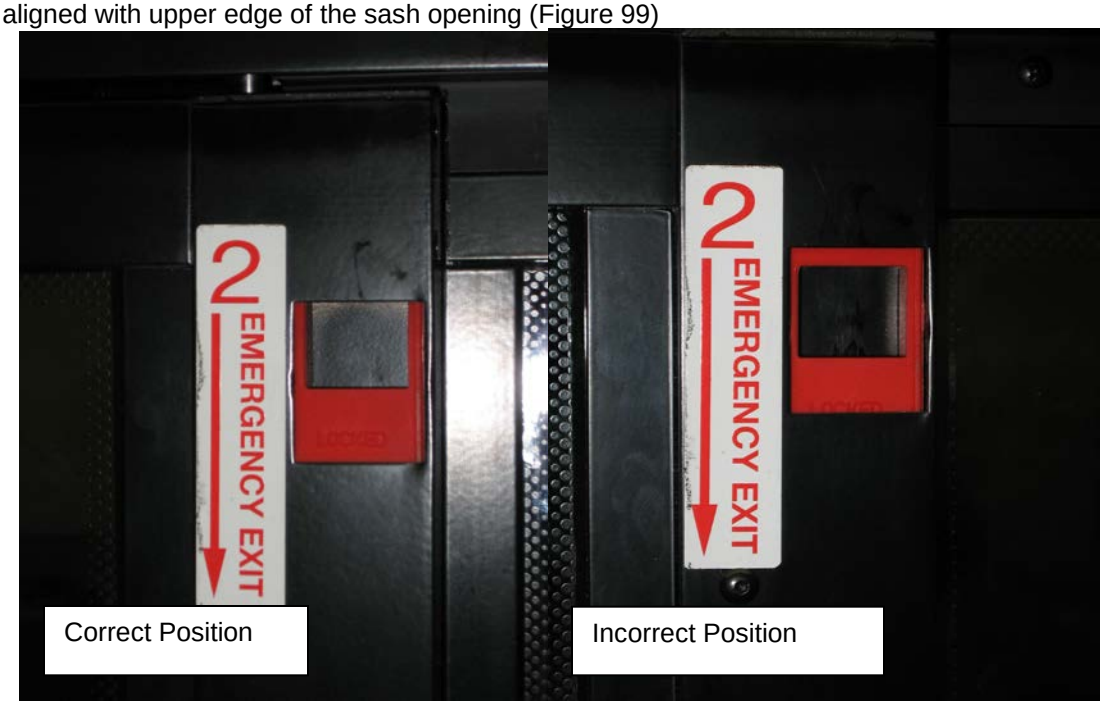

FIGURE 99: RELEASE LATCH PROPER POSITION

7. <u>* Failure to confirm this step may lead to the sash becoming disengaged with the frame and could result in personal injury.</u>
8. Operate the window to confirm that it opens and closes properly.
9. Install the screen assembly.

10.3 ZONE 3

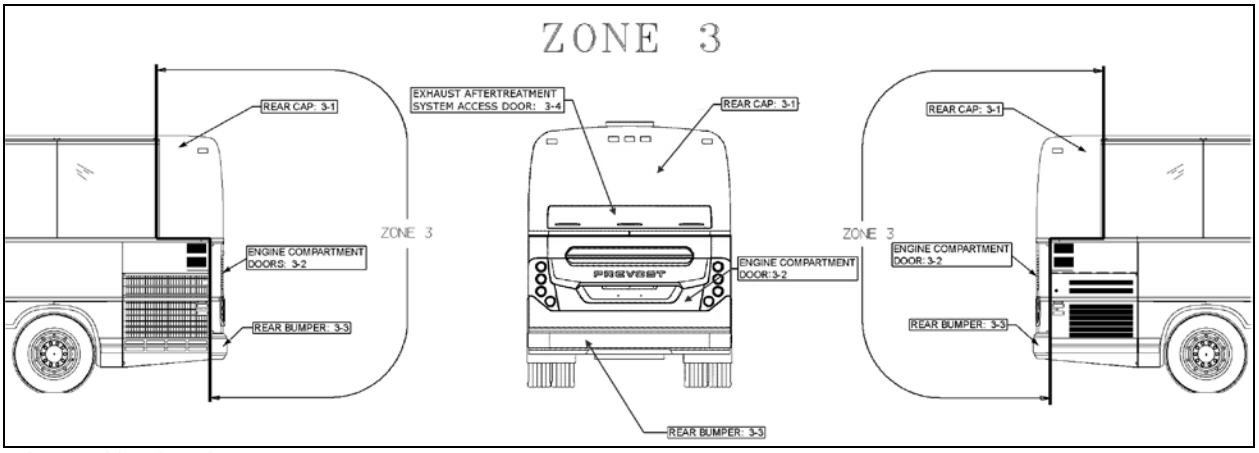

FIGURE 100: ZONE 3

10.3.1 Rear Cap

The fiberglass rear cap does not need any maintenance except painting as needed. It is held in place with adhesive. If ever it has to be replaced, make an appointment at a Prevost service center near you.

For minor damages, refer to Paragraph 4 "Common Fiberglass Repair Procedure" and Paragraph 5 "Common Painting Procedure".

10.3.2 Engine Compartment Doors

❖ **Engine Compartment Doors Adjustment**

The engine compartment door may be adjusted for proper fit by untightening support bolts:

NOTE
*Consult the "BODY PANEL AND WINDOW SPACING DIAGRAM" for proper door gaps adjustment. (*Figure 77*)*

1. To adjust the door VERTICAL position, loosen the bolts (4 on each side) holding the door supporting arm and gas springs bracket to the *vehicle structure* (Figure 101).
2. To adjust the door LATERAL position, loosen the bolts (3 on each side) holding the door supporting arm and gas springs bracket to the *door* (Figure 101).
3. Adjust the door FORE & AFT position by screwing/unscrewing the rubber door stops on each side of the door opening (Figure 101).
4. Check that the door swings freely and close properly. *It may be necessary to adjust the door latch to get proper fit and operation*.

To adjust the latch mechanism and the striker pin:

1. Open the door to access the striker pin.
2. *Slightly* loosen the striker pin.
3. Using a hammer, adjust the striker pin to center it in the door latch mechanism.
4. Tighten the striker pin.
5. Check door fit and operation.

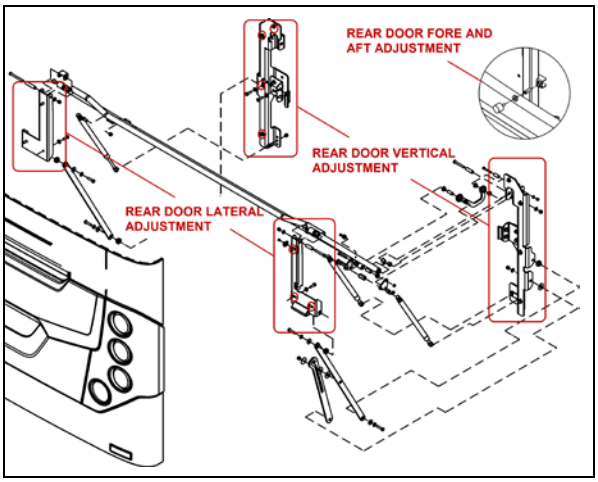

FIGURE 101: ENGINE COMPARTMENT DOOR 18633_1

❖ **Engine Compartment Door Body Panel Removal**

For the removal of engine compartment door body panel, you will need:

Pneumatic hammer tool (Zip Gun);
Razor sharp window scraper;
A pair of locking pliers;
Isopropyl alcohol.

- Remove damaged engine compartment door from vehicle.
- Install the damaged door onto an appropriate support.
- Wearing gloves, goggles and ear plugs, pry loose body panel using a “Zip gun” or lever starting from the edge opposite the curved side.
- Use the “Zip gun” to detach completely the stainless steel body panel from door frame.

CAUTION

Do not damage painted surface.

- Use a second person equipped with a pair of locking pliers to pull the body panel as you cut the Sika bead.

WARNING

Be very careful when pulling the body panel, somebody could get hurt if the body panel suddenly detach from the door surface without notice.

- Using the window scraper, remove any Sika bead or self-adhesive tape residue left on the fiber glass surface.

For gluing of engine compartment doors molding, refer to procedure **SAV00211**.

For engine compartment door body panel installation, refer to procedure **SAV280032**.

10.3.3 Rear Bumper

Remove three bolts on each side holding bumper to vehicle and remove bumper.

To install bumper, reverse the procedure.

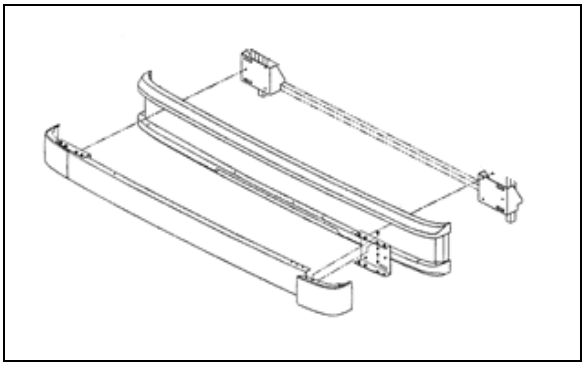

FIGURE 102: REAR BUMPER

10.4 ZONE 4

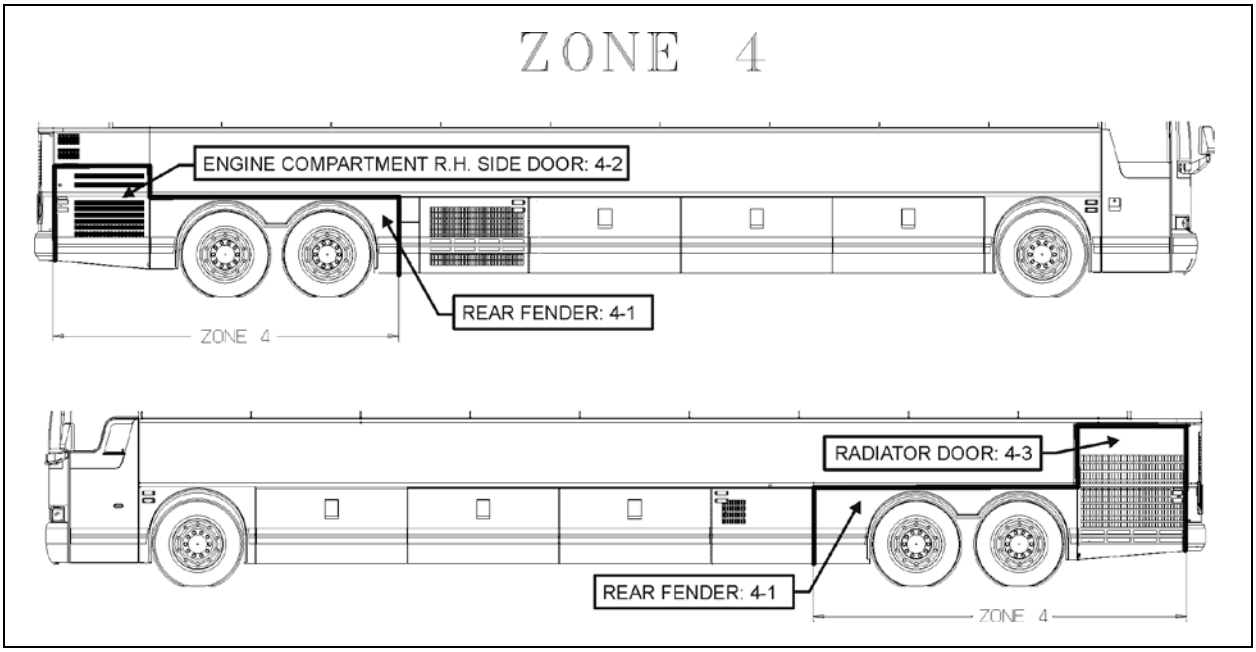

FIGURE 103: ZONE 4

10.4.1 Rear Fender

On X3-45 VIP vehicles, rear fenders are hinged for maintenance on brakes and suspension. Each rear fender panel has two mechanical spring loaded holding devices fixing it to the vehicle's structure. Push the spring type rod sideways to disengage the lock.

For the installation of rear fender body panel, refer to procedure **SAV470046**.

10.4.2 Engine R. H. Side Access Door

Engine R. H. side access door may be adjusted for proper fit. To do so, follow the steps below:

1. To adjust the position, the door must be free to move without any restriction. For this reason, remove pin E and stripe plate C (**FIGURE 104**).

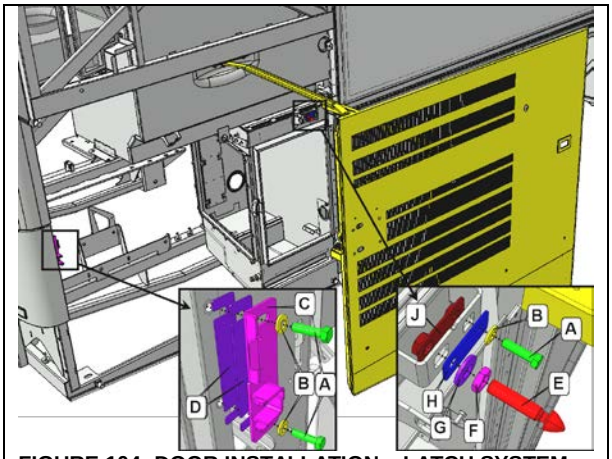

FIGURE 104: DOOR INSTALLATION – LATCH SYSTEM

A - BOLT
B - BELLEVILLE WASHER
C - STRIKE PLATE
D - SPACER
E - PIN
F – LOCK NUT
G - BELLEVILLE WASHER
H - PLATE

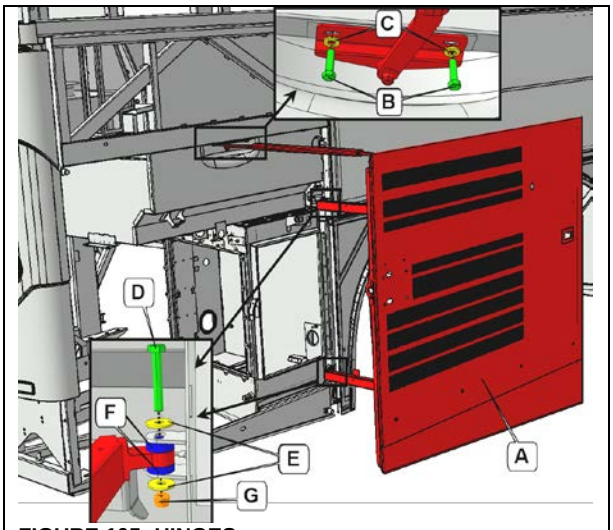

FIGURE 105: HINGES

A – ENGINE R.H. SIDE ACCESS DOOR
B - BOLT
C - BELLEVILLE WASHER
D - BOLT
E - WASHER
F –SPACER
G - NUT

Vertical adjustment

2. Make sure bolts A are tight (**FIGURE 106**).

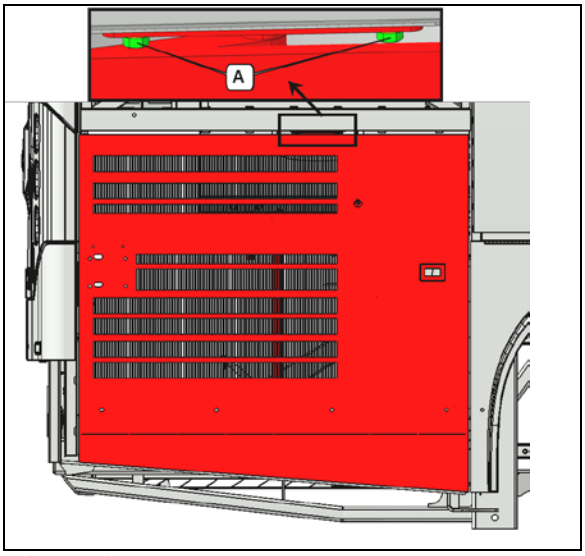

FIGURE 106

3. Compare the lower edge of the door level with the lower edge of the rear fender. The door should be flush with the fender (FIGURE 107).

   Tolerance is ± 3/32" (± 2mm)

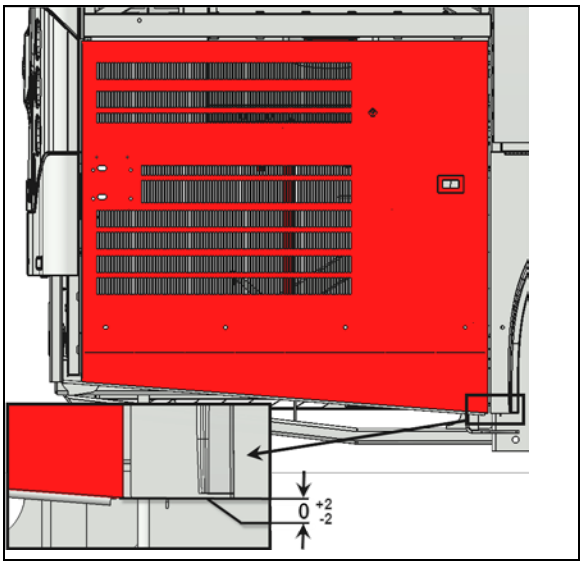

FIGURE 107

4. If the vertical position is out of tolerance, rotate the door using the adjustment provided on the inner side of the door, at the attachment points between the arm and the door (**FIGURE 108**).

   Perform the adjustment with the lower adjustment point preferably.

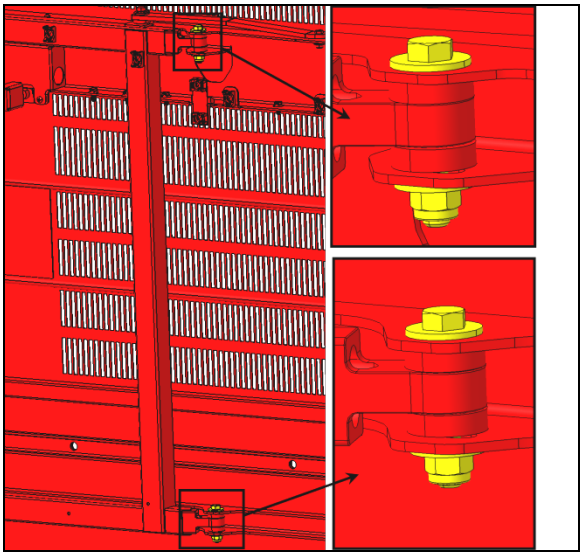

FIGURE 108

Longitudinal adjustment

5. Check the gap between the door and the adjacent panel at the level of the upper attachment point of the arm on the door. The gap should be ¼" (6 mm) (FIGURE 109).

   Gap 1/4" (6 mm)

Tolerance is ± 3/64" (± 1mm)

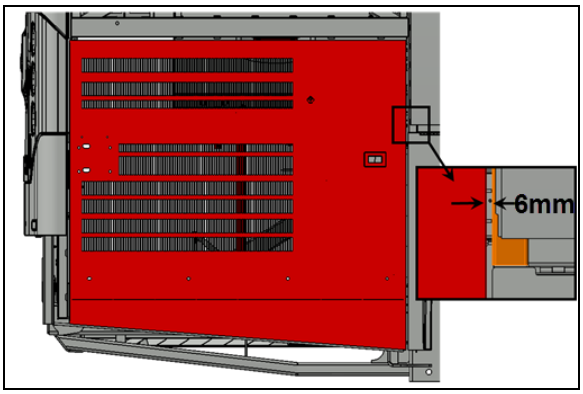

FIGURE 109

6. If the longitudinal position is out of tolerance, adjust using the adjustment provided on the inner side of the door, at the upper attachment point of the arm on the door (FIGURE 110).

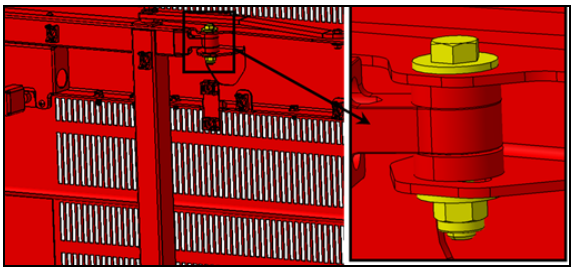

FIGURE 110

7. Check the gap between the door and the adjacent panel at the level of the lower attachment point of the arm on the door. The gap should be ¼" (6 mm) (FIGURE 111).

   Gap 1/4" (6 mm)

   Tolerance is ± 3/64" (± 1mm)

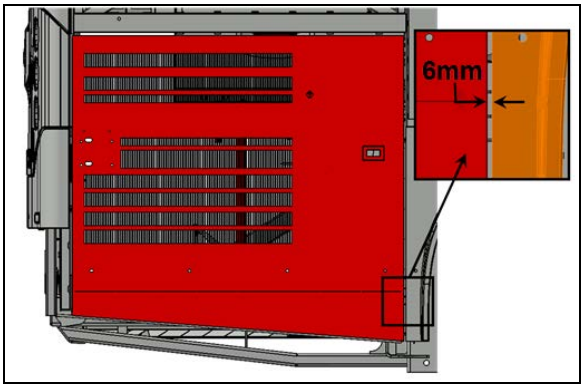

FIGURE 111

8. If the longitudinal position is out of tolerance, adjust using the adjustment provided on the lower attachment point of the arm on the vehicle chassis (FIGURE 112).

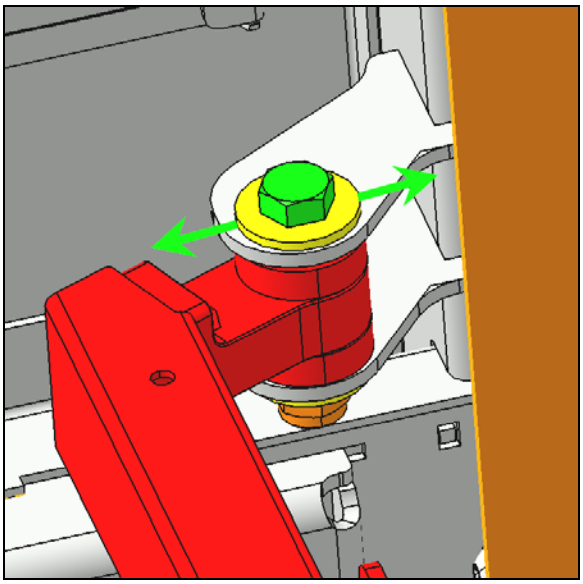

FIGURE 112

Latch installation

9. Install strike plate C and pin E centered in the available adjustment position provided by respective slotted holes (FIGURE 113). The components should be snug but not tight so that they can move when the door will be closed later on in this procedure.

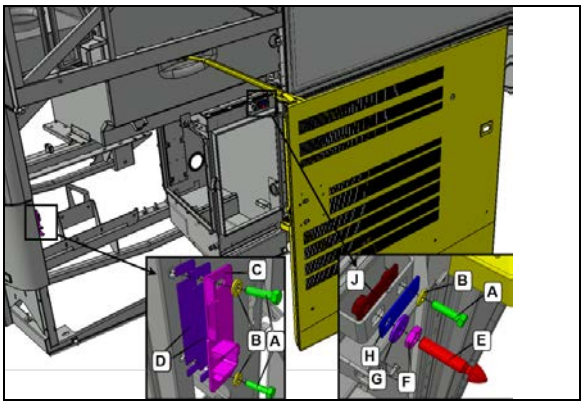

FIGURE 113

10. Check that the two items identified with arrows are snug but not tight (FIGURE 114).

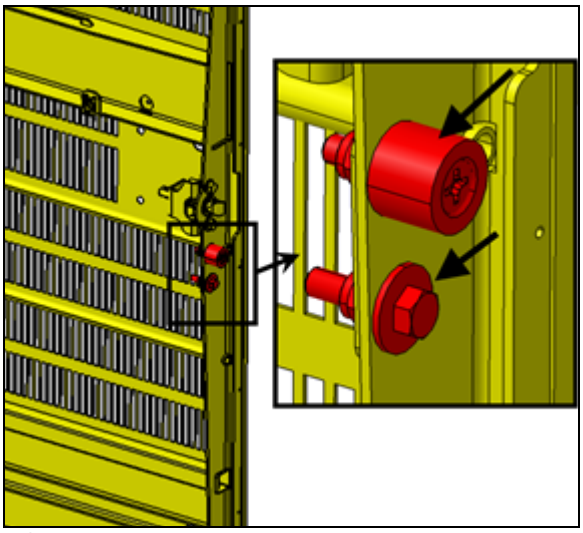

FIGURE 114

11. Before adjusting the pin, make sure that it doesn't exceed more than 2" (50mm) at the first closing of the door (FIGURE 115). Damage to the door can result if this condition is not respected.

    Not more than 2" (50mm)

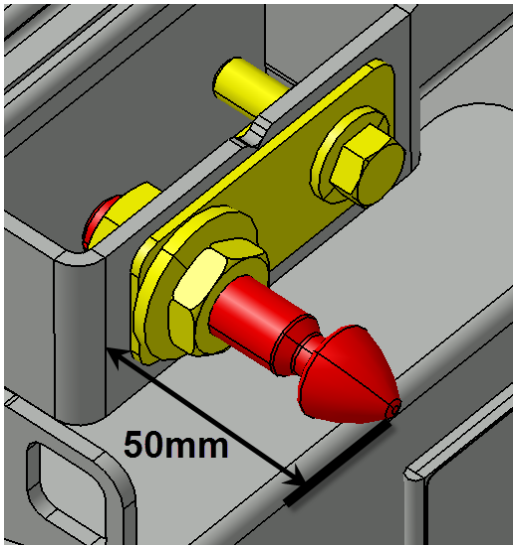

FIGURE 115

12. Close the door gently.

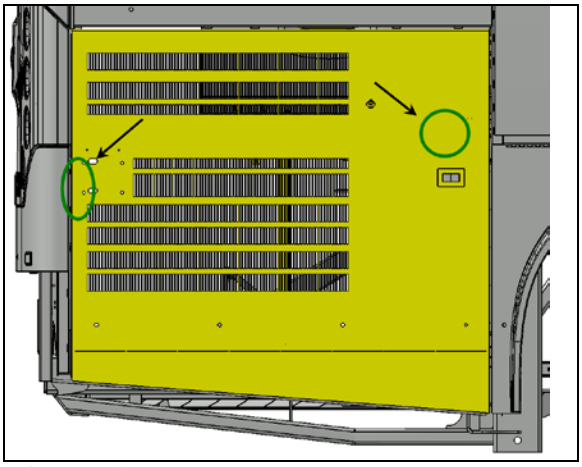

FIGURE 116

13. Open the door and perform a final tightening to the items indicated with arrows (FIGURE 117).

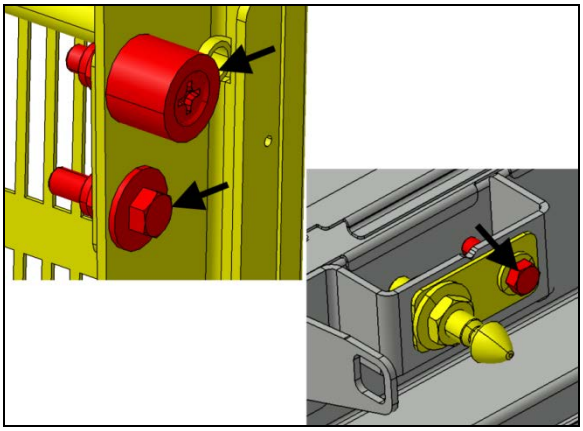

FIGURE 117

Transversal adjustment

14. Once closed, the door surface must be even with the adjacent steel panel.

    Tolerance is 3/64" (1mm)

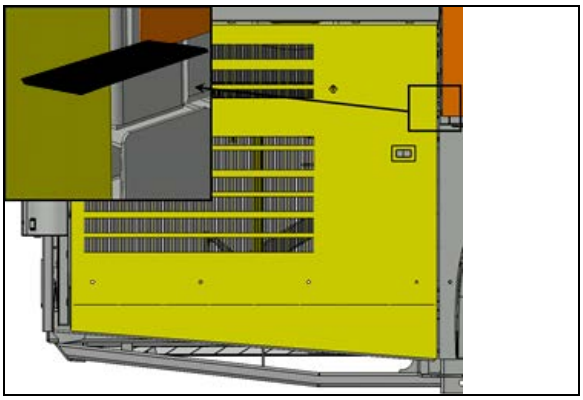

FIGURE 118: USE A RULER (SHOWN IN BLACK) TO CHECK THAT SURFACES ARE EVEN

15. Use the pin to adjust the door so it is even with the adjacent steel sheet. Screw or unscrew the pin as required and then apply final tightening to the jam nut (FIGURE 119).

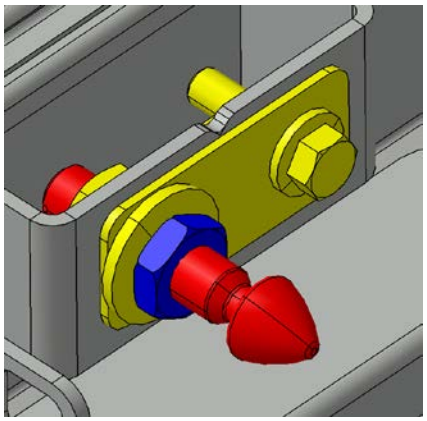

FIGURE 119

16. The R.H. side engine access door must exceed the engine compartment by 5/32" (4mm).

    Tolerance is ±3/64" (±1mm)

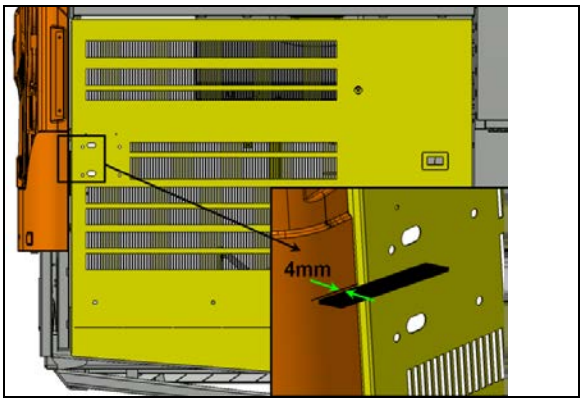

FIGURE 120

14. Perform the transversal adjustment by moving the strike plate using the slotted holes (FIGURE 121).

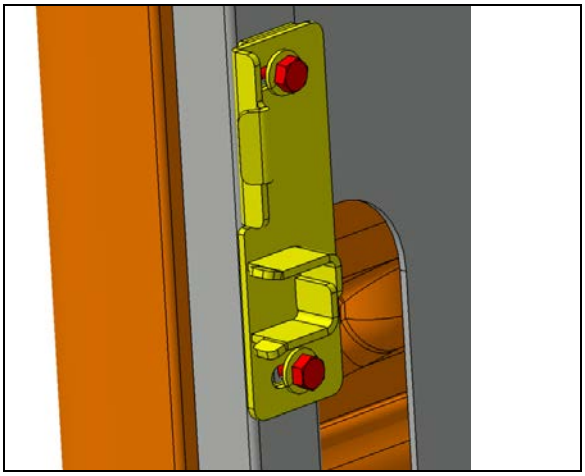

FIGURE 121

17. The latch bolt must engage not less than 13/32" (10mm) behind the strike plate.

    13/32" (10mm) min

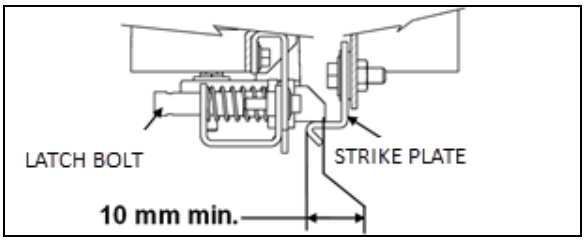

FIGURE 122

18. Screw in or out the two upper stoppers so that the upper part of the door exceeds the horizontal member by 5/32" to 3/16" (4mm to 5mm) (see FIGURE 123 & FIGURE 124).

19. Adjust the lower stopper in order to have the lower part of the door even with the fender.

    Tolerance is ± 3/64" (± 1mm)

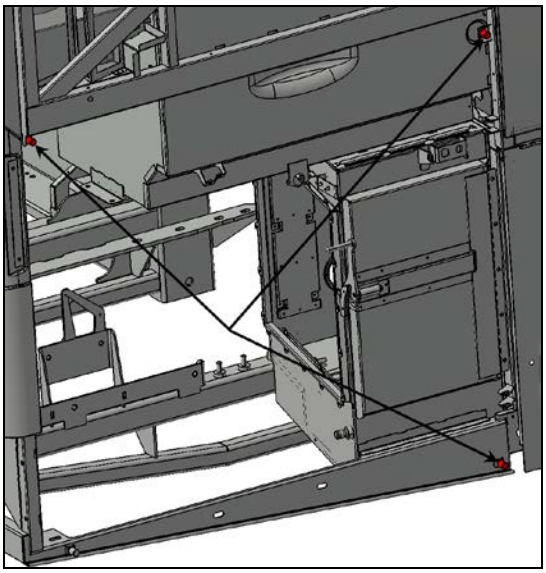

FIGURE 123

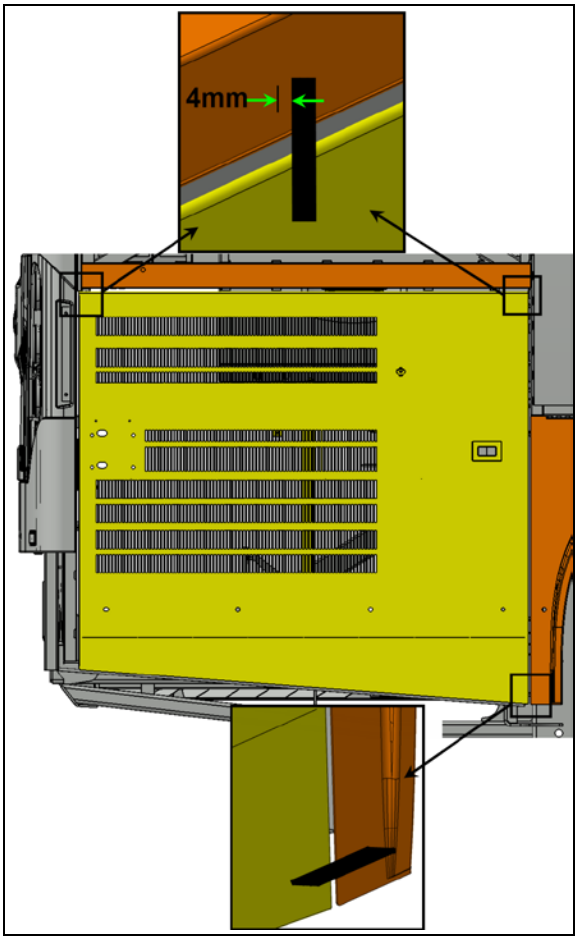

FIGURE 124

10.4.3 Engine Radiator Door

Radiator door may be adjusted for proper fit by untightening hinge bolts:

6. Loosen the bolts, (details “A” & “C”, Figure 125) holding the hinge to the vehicle structure to shift the door "LEFT or RIGHT".
7. Loosening the bolts (details “B” and “D”, Figure 125) allows the door to be shifted "UP or DOWN".

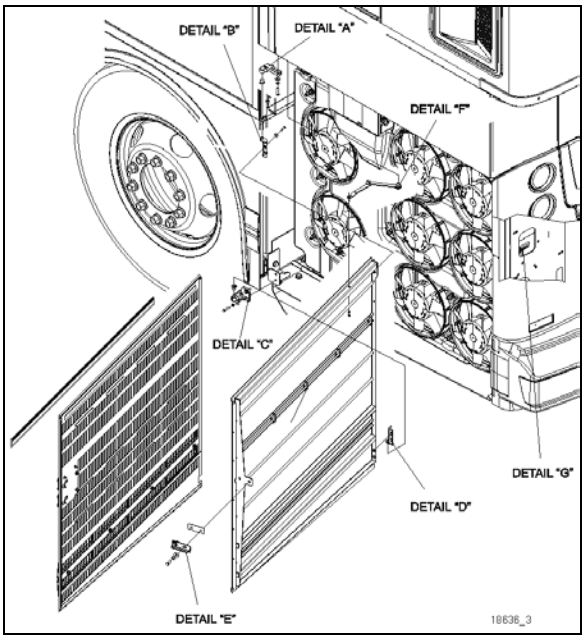

FIGURE 125: RADIATOR DOOR

8. Adjust the door position depending on the gap needed between exterior finishing panels.
9. Tighten the bolts.
10. Check that the door swings freely and closes properly. It may be necessary to adjust the door latch tab to get proper fit and operation.

To adjust the latch mechanism (details “E” and “G”, Figure 126) and the striker pin:

5. Open the door and slightly loosen the latch tab (detail “E”, Figure 126).
6. Place shims between tab and door frame to increase tab engagement length in the latch.
7. Move tab left or right to increase engagement depth in the latch.
8. Check door fit and operation.

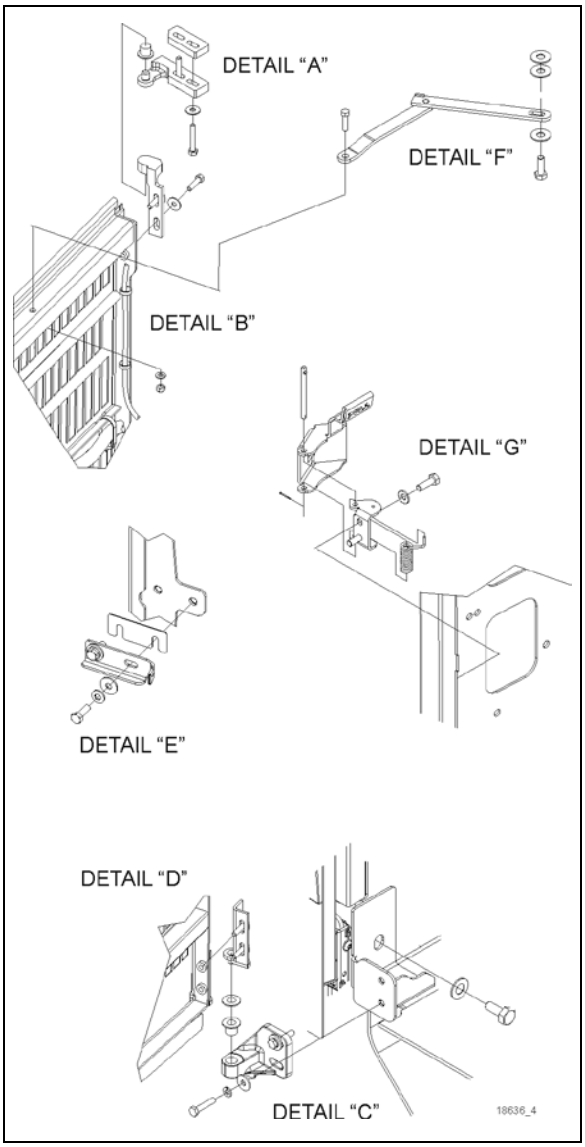

FIGURE 126: RADIATOR DOOR DETAILS

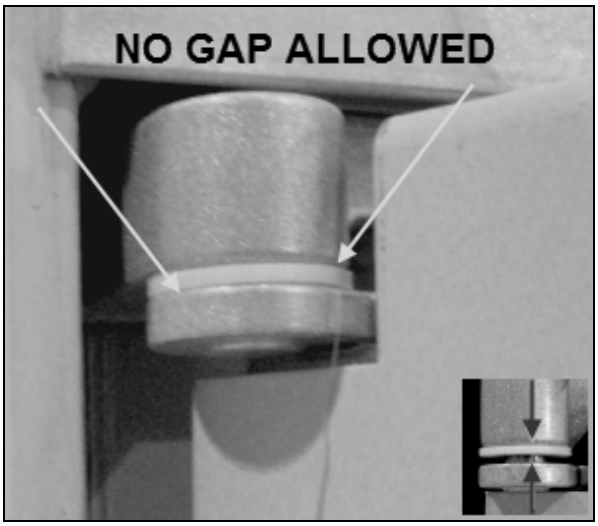

NOTE
The striker pin must engage at least 13/32" (10mm). Add spacers between the latch and the vehicle body to adjust the engagement.

NOTE
There should be no gap between the washer and the hinge upper and lower halves.

10.5 ZONE 5

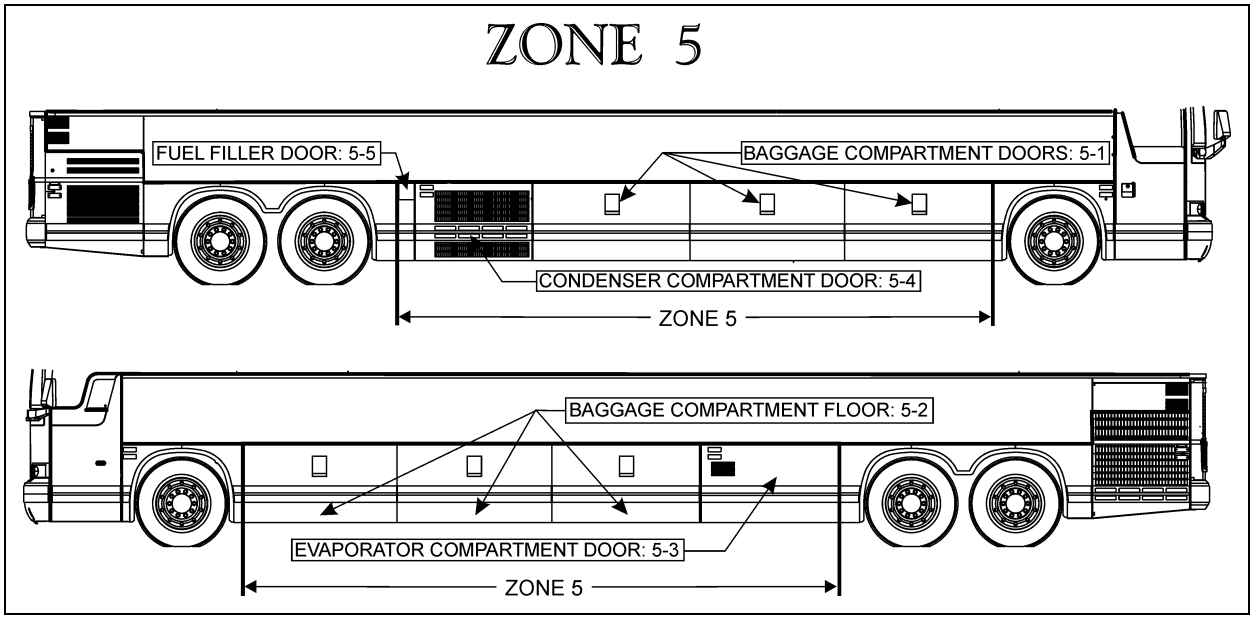

FIGURE 127: ZONE 5

10.5.1 Pantograph Baggage Compartment Doors (Aluminum)

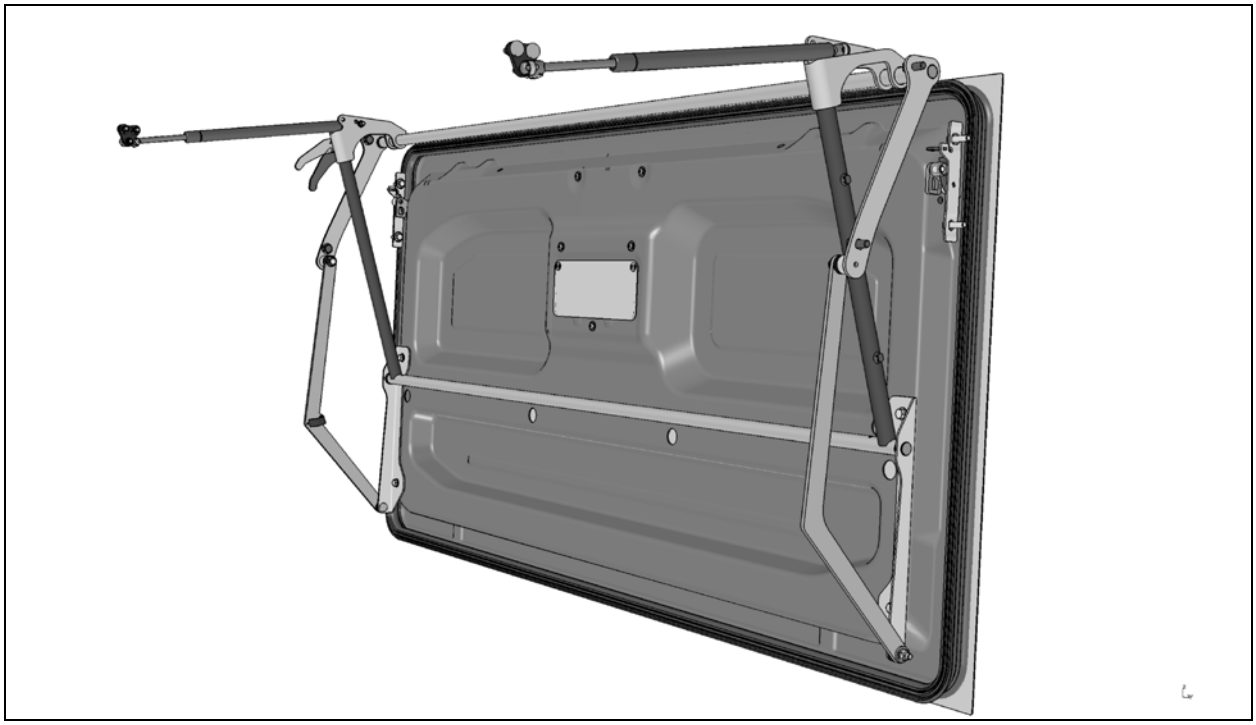

For the removal and installation of a baggage compartment door body panel, you will need:

- A drill with drill bits;
- Pneumatic hammer tool (Zip Gun);
- Razor sharp window scraper or putty knife;

➢ Open damaged compartment door and unfasten rub rail fixing bolts. Remove rub rail.

➢ Unfasten bolts and disconnect cable if necessary in order to remove door from vehicle.

➢ Preferably install the door onto a work surface where it can be solidly fixed.

- **Door Panel replacement**

➢ Refer to SAV10054-67.

- **Baggage Compartment Door Adjustment**

11. Adjust door to get a 6mm gap at the top.

12. All adjustments are to be made with door closed, unless specified.

13. Center door in the opening using the retaining rings.

NOTE
Lateral adjustment is made by adding/ removing retaining rings in these locations.

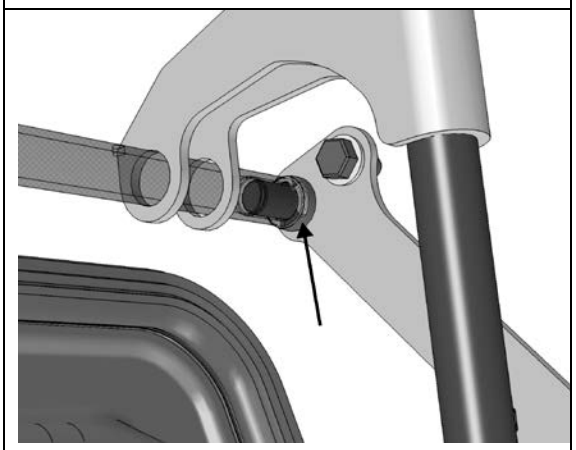

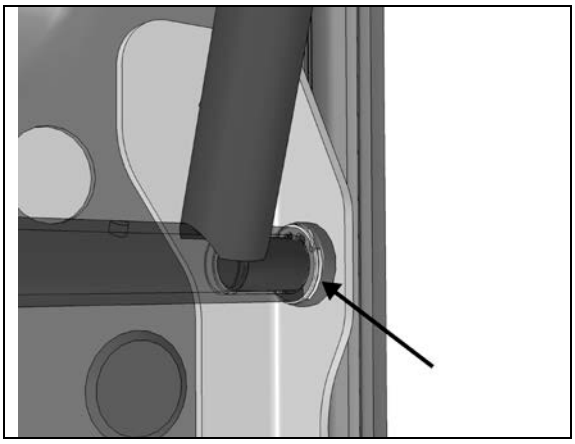

14. Adjust door position and evenness with reference to adjacent panels and doors.

NOTE
Vertical adjustment is achieved by moving the door along the mounting plates slots.

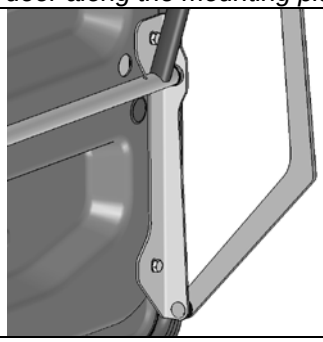

NOTE
Adjustment is made by moving IN or OUT the lock plates. Adjust one corner at a time.

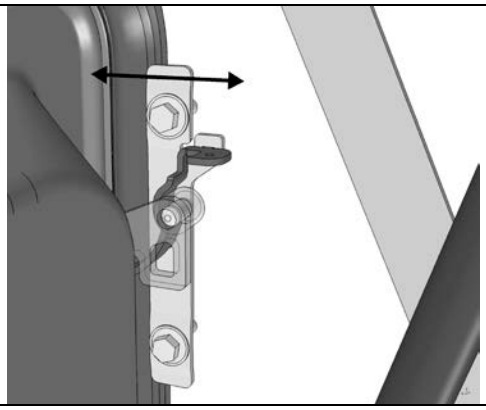

15. Check handle adjustment. Handle must remain tight against its plastic housing.

NOTE

Adjustment is made by moving UP or DOWN the lock plates.

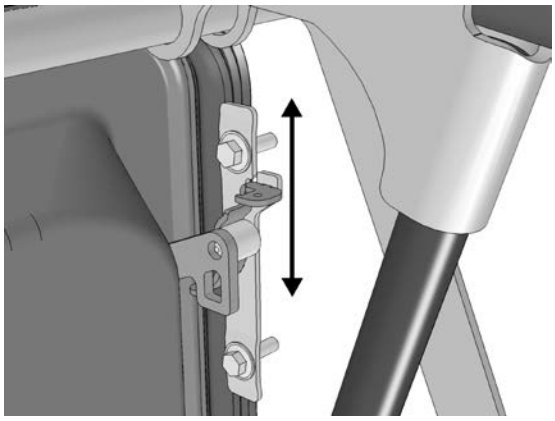

16. Open baggage compartment door and adjust using the cylinder mounting block.

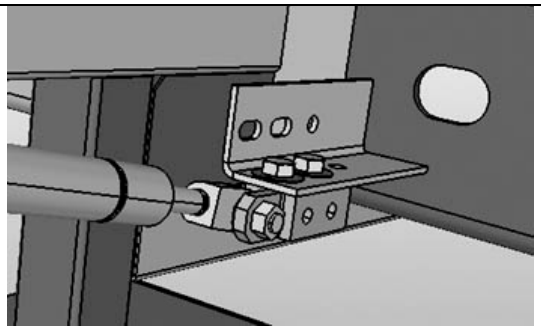

17. Door should be adjusted in reference to neighboring doors.
18. Target is to have 5 ½" (140mm) from bus body panel to door panel and +/- 2mm vertically between doors.

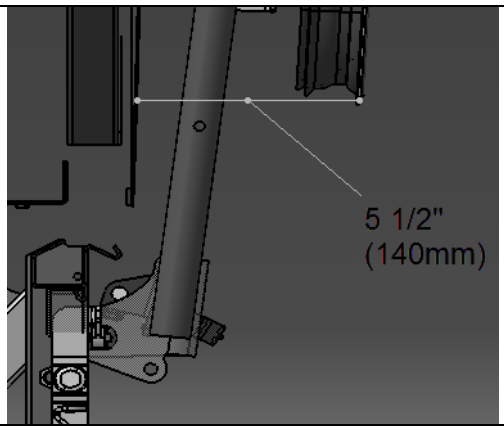

19. Tighten cylinder block fixing screws.
20. Door bottom edge compression can be adjusted by moving in or out the pantograph arms at this location.

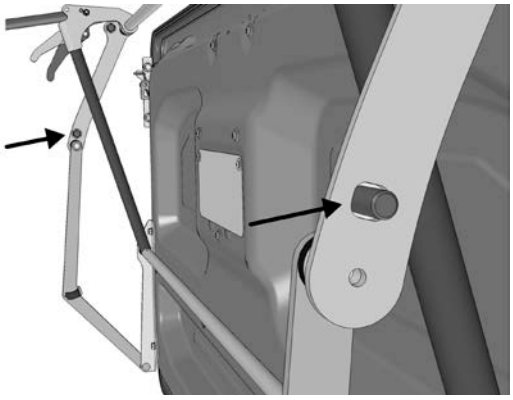

10.5.2 Hinged Baggage Compartment Doors (Aluminum)

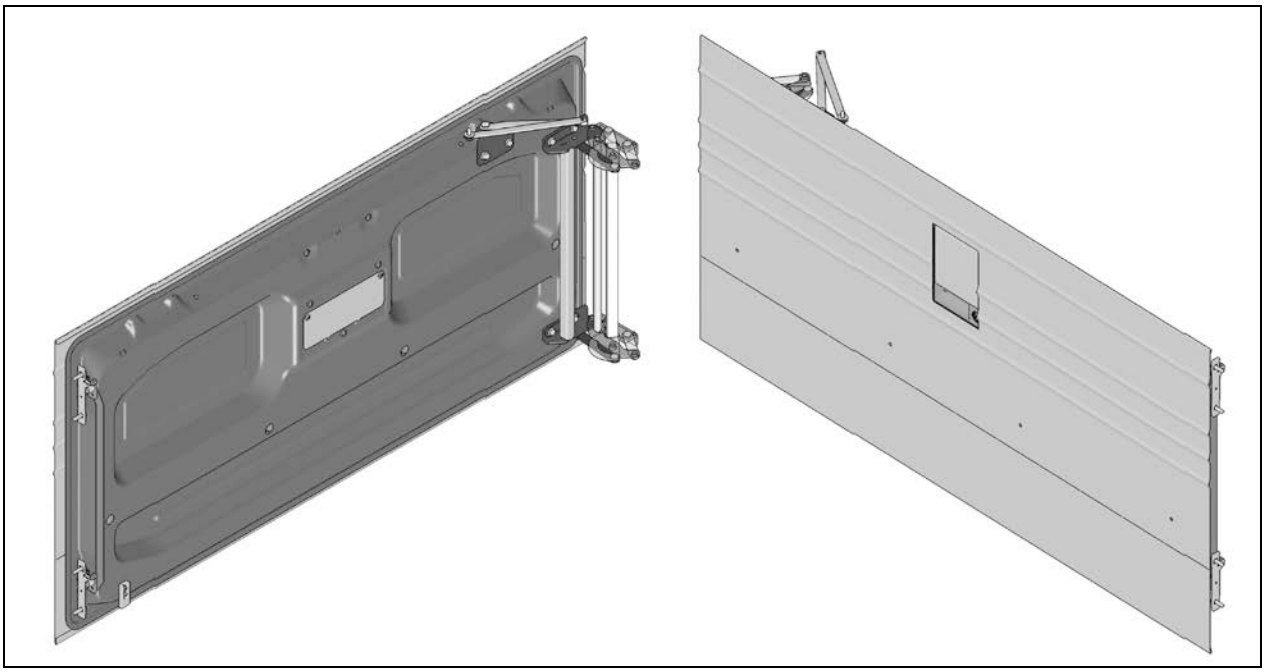

- **Door Adjustment**

1. Open the door.
2. Loosen the screws fixing the hinge to door assembly. Loosening the screws allows the door assembly to be shifted "LEFT or RIGHT" and "UP or DOWN".

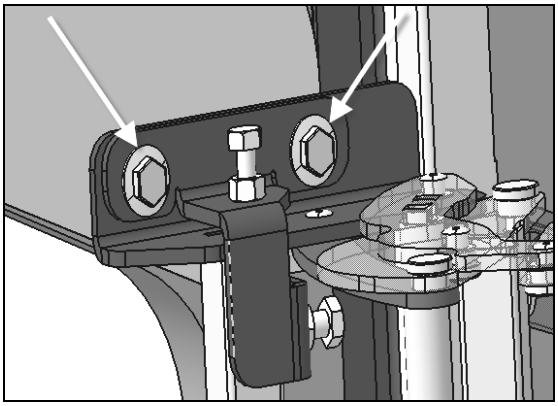

3. Using the top adjusting screws, adjust door to get a 6mm gap at the top.

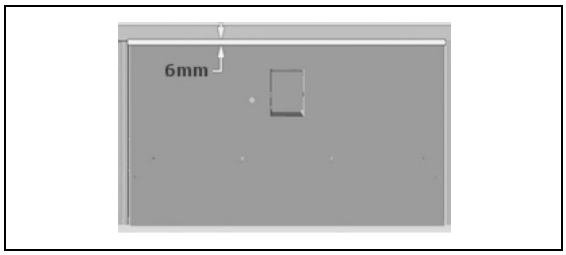

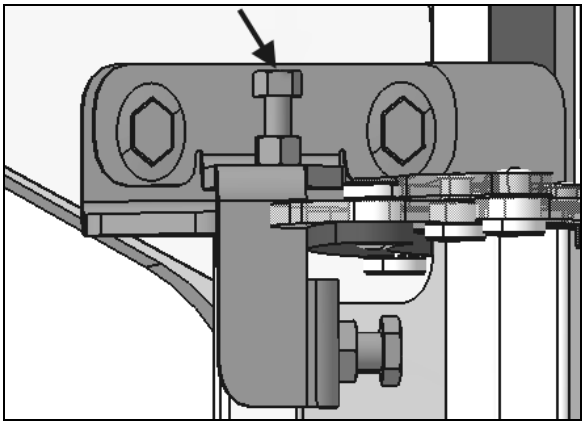

4. Using the 2 side adjusting screws (top and bottom), adjust door to get a 6mm to 8mm lateral gap (gap must be equal on both side).

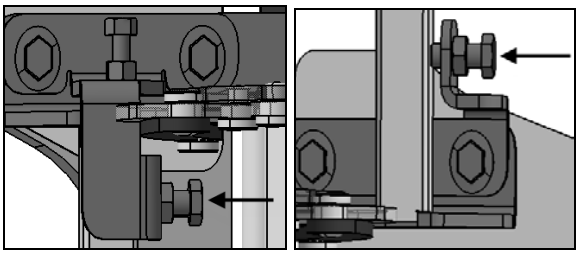

5. To adjust door depth, loosen the screws fixing the hinge to frame assembly and slide the hinge horizontally to move the door in or out. Depth should be calculated at 29mm +/- 2mm measured from bus frame out **or** 5mm +1mm if measurement is taken from small square tube on frame.

6. Tighten the hinge screws.

7. Make final adjustment of door position and evenness with reference to adjacent panels and doors as required.

8. Checks handle adjustment. Handle must remain tight against its plastic housing.

NOTE
Adjustment is made by moving UP or DOWN the lock plates.

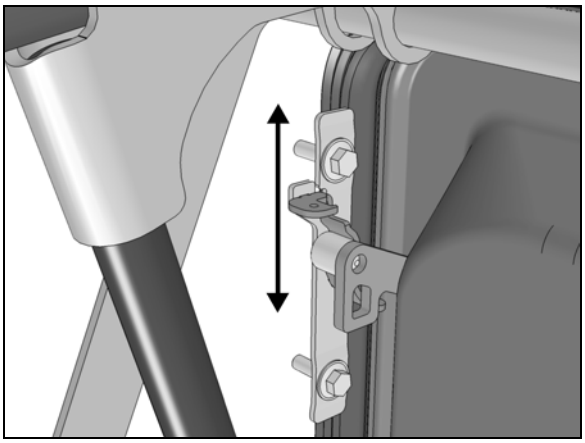

9. Make sure that skid bar only touches slightly bus structure at bottom. The door should not move up when closing.

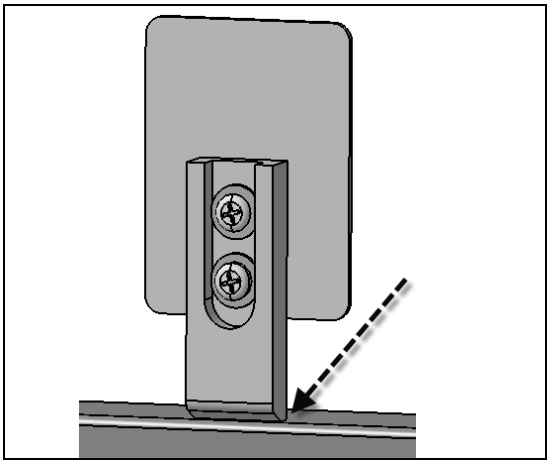

10.5.3 Condenser Compartment Door

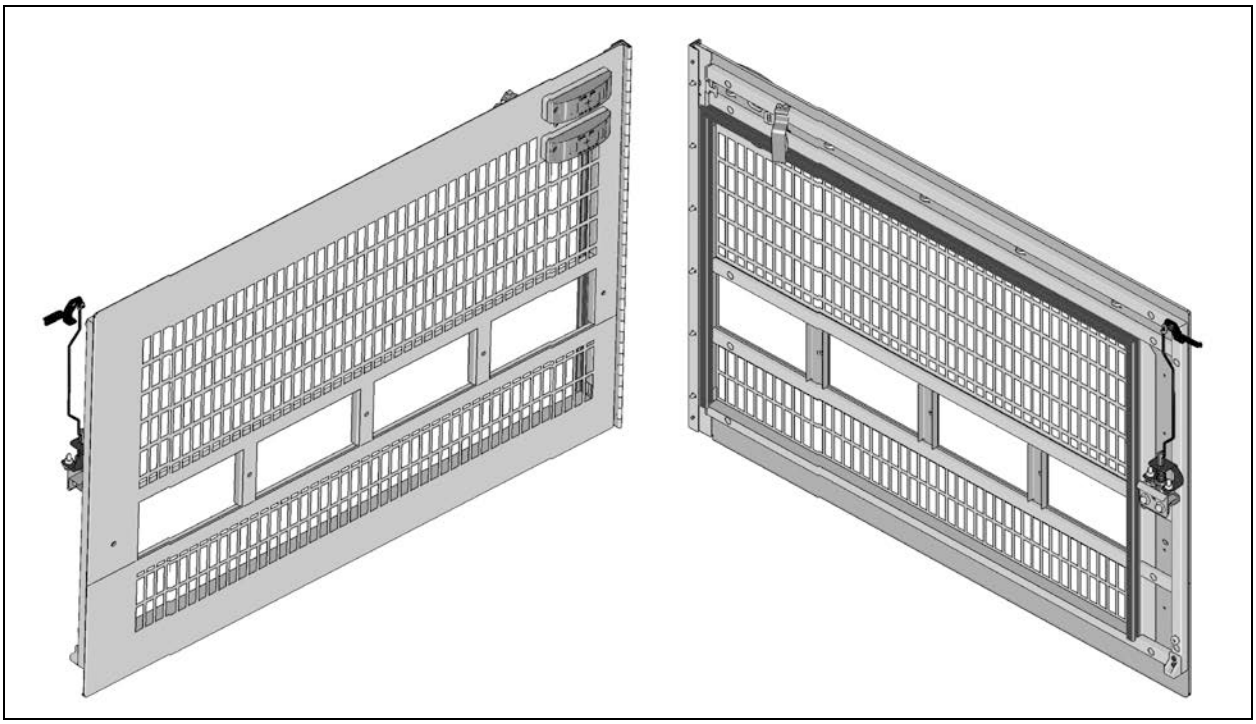

FIGURE 128: CONDENSER DOOR

- **Door Adjustment**

1. Open the condenser door.
2. Loosen the screws fixing the hinge to hinge attachment or hinge to door assembly. Loosening the screws allows the condenser door assembly to be shifted "LEFT or RIGHT" and "UP or DOWN" or “IN and OUT”.
3. Adjust condenser door assembly position at the hinge.
4. Respect the required gap between exterior finishing panels.
5. Tighten the screws.
6. Check that the door swings freely and closes properly. It may be necessary to adjust the door latch to get proper fit and operation.

10.5.4 Evaporator Compartment Door (Aluminum)

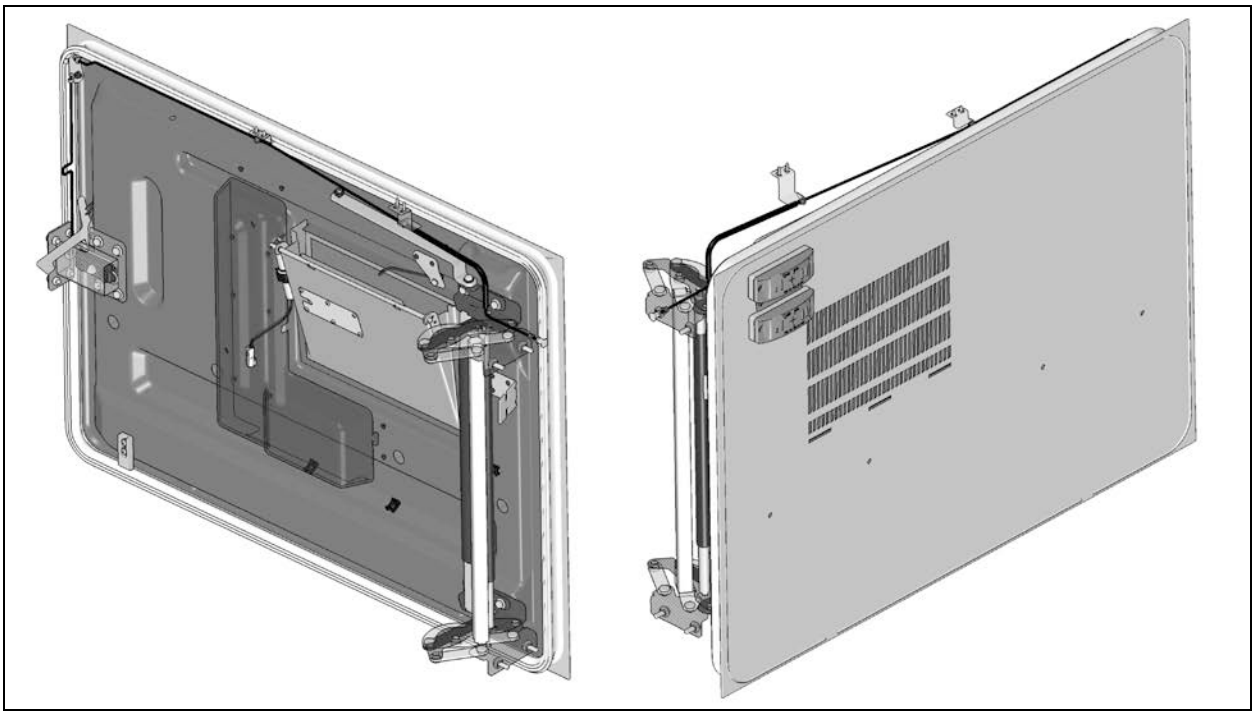

FIGURE 129: EVAPORATOR DOOR (ALUMINUM)

For the adjustment of an evaporator door, you will need:

- Centering tool G34148_500

- **Door Adjustment**

1. Open the evaporator door.
2. Loosen the screws fixing the hinge to hinge attachment or hinge to door assembly. Loosening the screws allows the evaporator door assembly to be shifted "LEFT or RIGHT" and "UP or DOWN" or “IN and OUT”.
3. Adjust evaporator door assembly position at the hinge.
4. Door exterior panel on hinge side should be positioned at 29mm +/- 2mm measured from bus frame out.

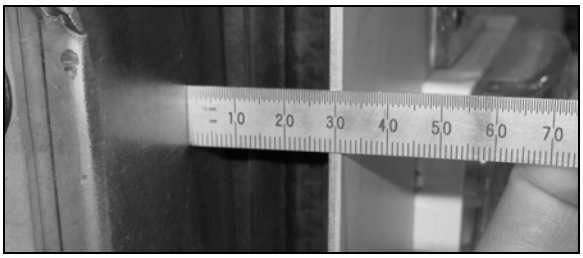

5. Respect the required gap between exterior finishing panels.
6. Tighten the hinge screws.
7. To allow adjustment of the latch mechanism, lightly tighten the retaining hardware on receptacle and receptacle support to frame.
8. Place centering tool G34148_500 in the receptacle cavity.

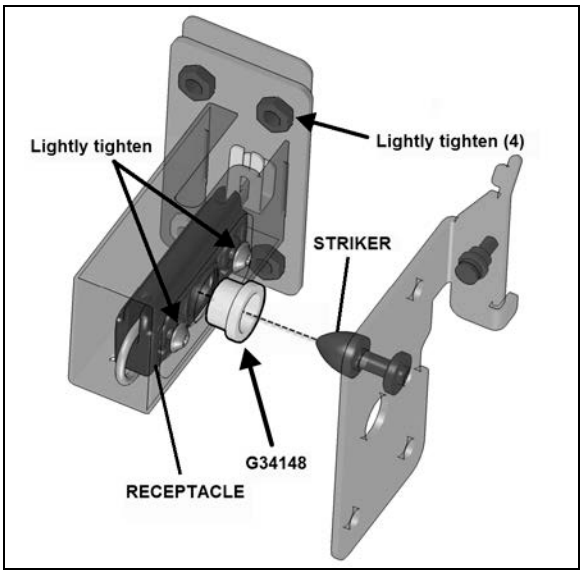

9. Close door to center the latch assembly.

10. Tighten the receptacle screws only.

11. .Door exterior panel on latch side should be positioned at 8mm +1mm from frame. Make the adjustments by moving the receptacle support.

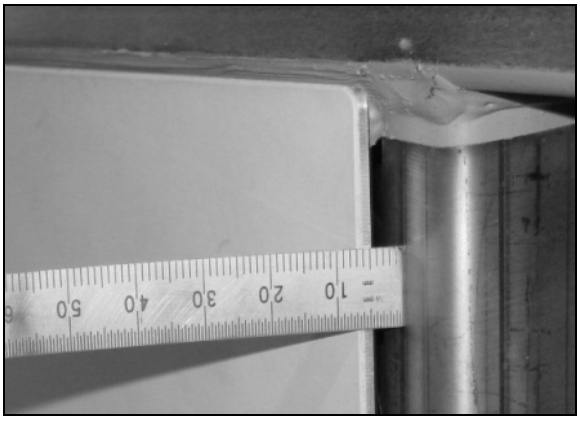

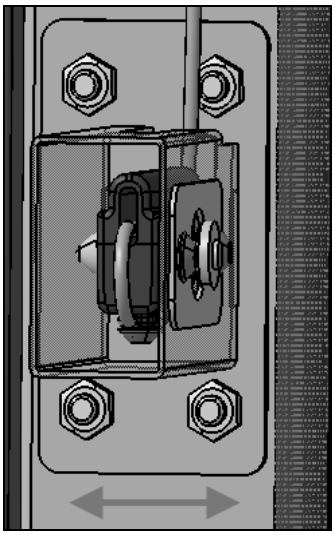

12. Make sure that backing plate is parallel to structure before tightening the retainer support hardware

13. Make sure that skid bar only touches slightly bus structure at bottom. The door should not move up when closing.

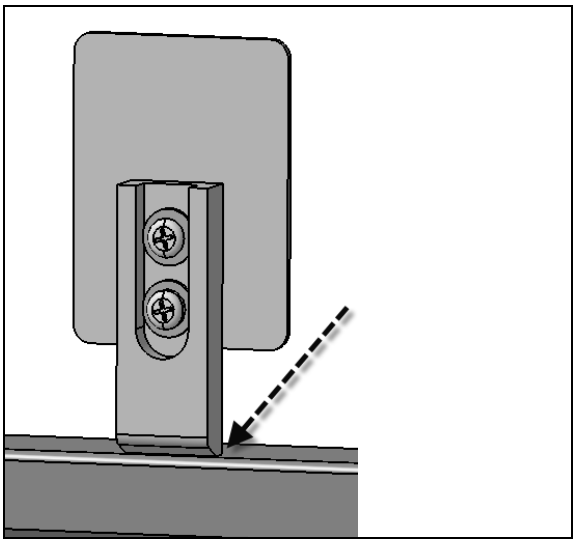

14. Check that the door swings freely and closes properly.

- **Door release in the event of a latch failure.**

If the door release mechanism is damaged or ceases to function for any reason, the door can be released by removing these screws on the fore wall of the rear fender side

10.5.5 Fuel Filler Door

- Open the fuel filler door.
- Loosen the screws holding the panel to hinge assembly.
- Adjust the fuel filler door position according to distance required between exterior finishing panels.
- Tighten the nuts.
- Check that the door swings freely and closes properly.

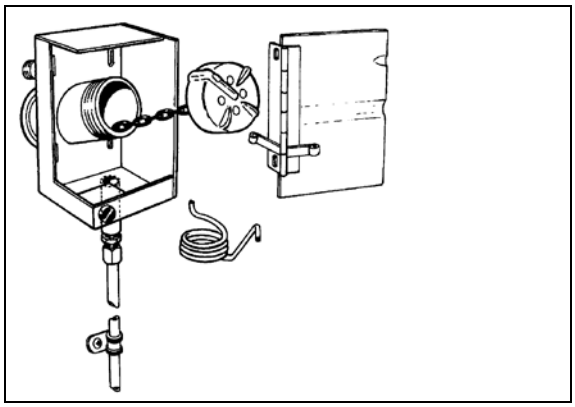

FIGURE 130: FUEL FILLER DOOR 03046

10.6 ZONE 6

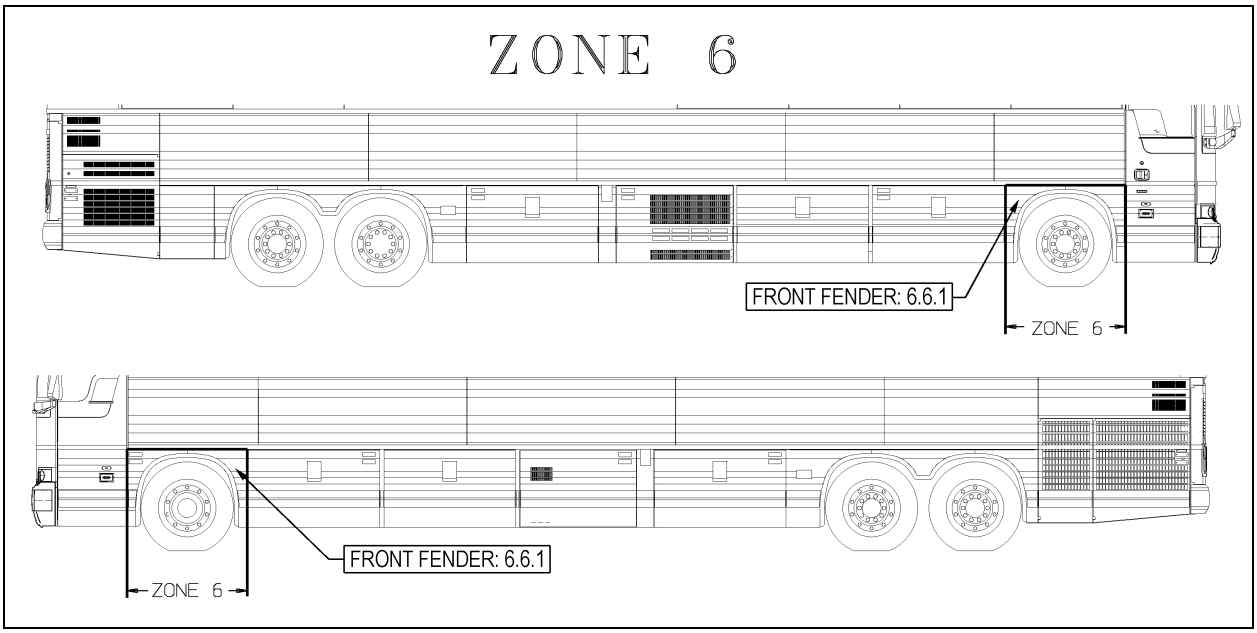

FIGURE 131: ZONE 6

10.6.1 Front Fender

Front fender may be removed using the following procedure:

Remove the nuts on the inside of the fender. Remove the fender from the vehicle. To reinstall, reverse the procedure.

For the installation of front fender body panel, refer to procedure **SAV470024**.

10.7 ZONE 7

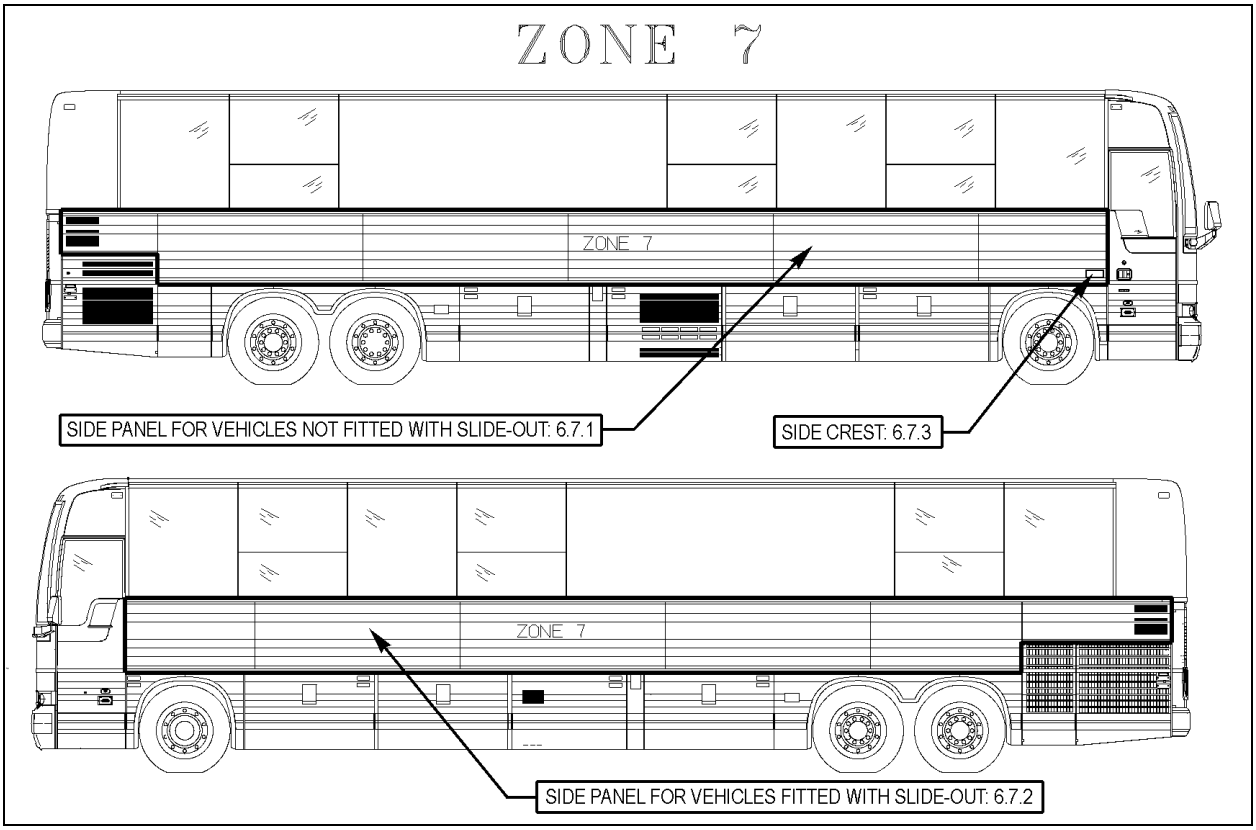

FIGURE 132: ZONE 7

10.7.1 Side Panel for Vehicles Not Fitted With Slide-Out

❖ **Removal**

Remove top and bottom finishing moldings. Insert a screwdriver into snap-on finishing molding joint. Bend finishing molding enough to be able to fix a pair of locking pliers. Using the pair of locking pliers, pull the stainless steel molding and at the same time gradually cut Sika bead with a sharp knife.	Be careful not to damage the adjacent surfaces You need to remove the finishing molding support and rivets in the case of engine air intake panel.
Insert a flat screwdriver between the side panel and the vehicle chassis, in the top left and right corners.	
Use the c-clamp to peel the side panel from the back structural panel as far as the middle and at the same time gradually cut Sika bead with a sharp knife. Do the same for the other corner.	Ideally, the hoist or chain block must be fastened to the floor while pulling from a 45° angle so as not to damage the vehicle structure
Remove as much glue as possible from the structure using a putty knife or pneumatic knife without damaging 206 G+P primer.	Never heat SikaFlex adhesive to remove.
Check panel horizontal supports for straightness	Tolerance: 1mm towards the outside and 1.5mm

using a straight edge. Take measurements with a ruler.	towards the inside.

For the structure preparation before the installation of a ridged side panel, refer to procedure **SAV00027**.

For gluing of ridged side panels, refer to procedure **SAV00028**.

For sealing the side panels' upper portion, refer to procedure **SAV00030**.

For gluing of horizontal finishing molding, refer to procedure **SAV00208**.

10.7.2 Side Panel for Vehicles Fitted With Slide-Out

❖ **Removal**

Refer to paragraph 7.7.1 for procedure.

CAUTION

Because most junction panels are only riveted and not spot welded, be careful when removing a side panel not to damage adjacent panels.

For the slide-out junction panel preparation before the installation of a ridged side panel, refer to procedure **SAV00031**.

For gluing of ridged side panels on vehicles fitted with slide-out, refer to procedure **SAV00029**.

10.7.3 Side Crest

- Clean vehicle surface using anti-silicone where the side crest and stickers will be applied.
- Using hands apply and compress side crest.
- Apply required stickers.

10.8 ZONE 8

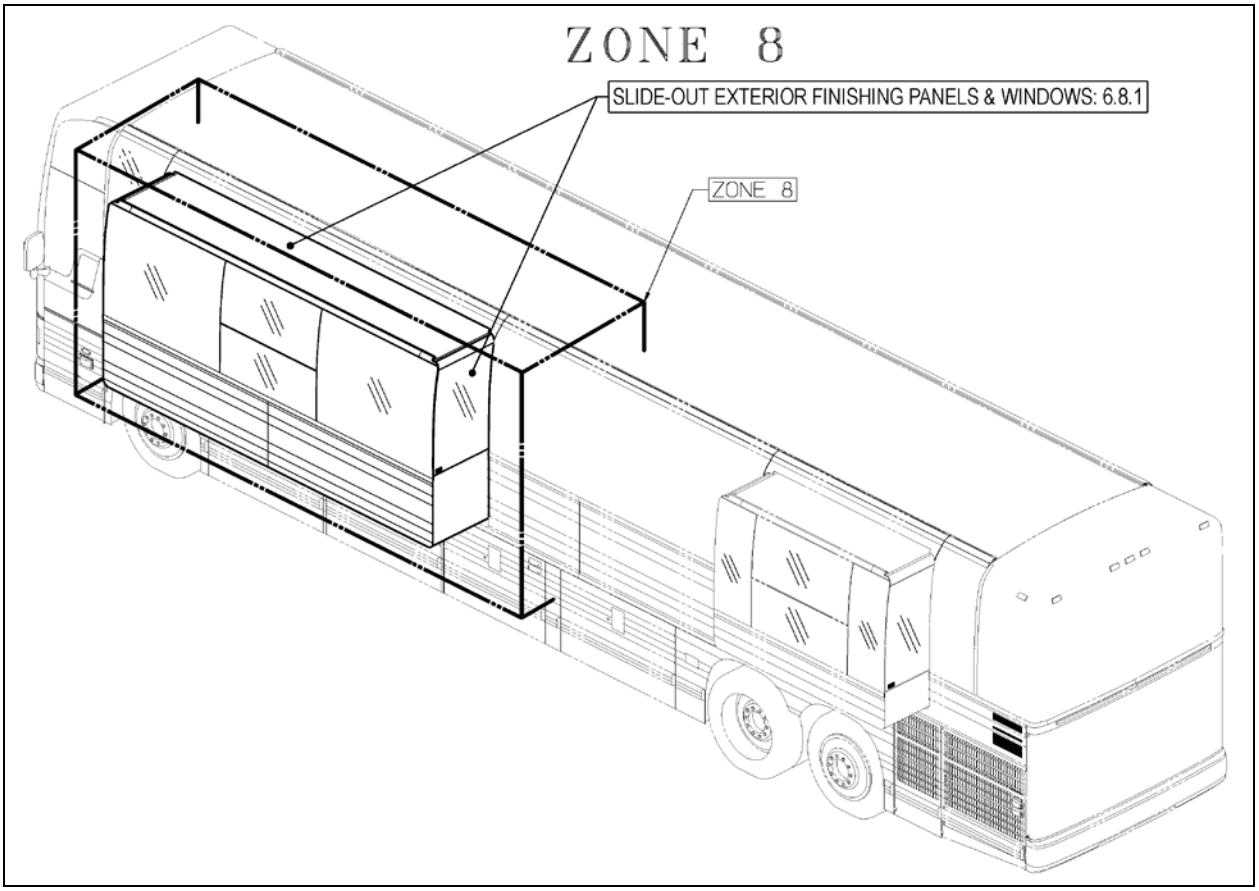

FIGURE 133: ZONE 8

10.8.1 Slide-Out Exterior Finishing Panels & Windows

For maintenance and procedures, refer to paragraphs on the vehicle's finishing panels and windows.

Methods, procedures, tools, cleaning products, adhesives and other products are the same as those used for the vehicle body.

10.9 ZONE 9

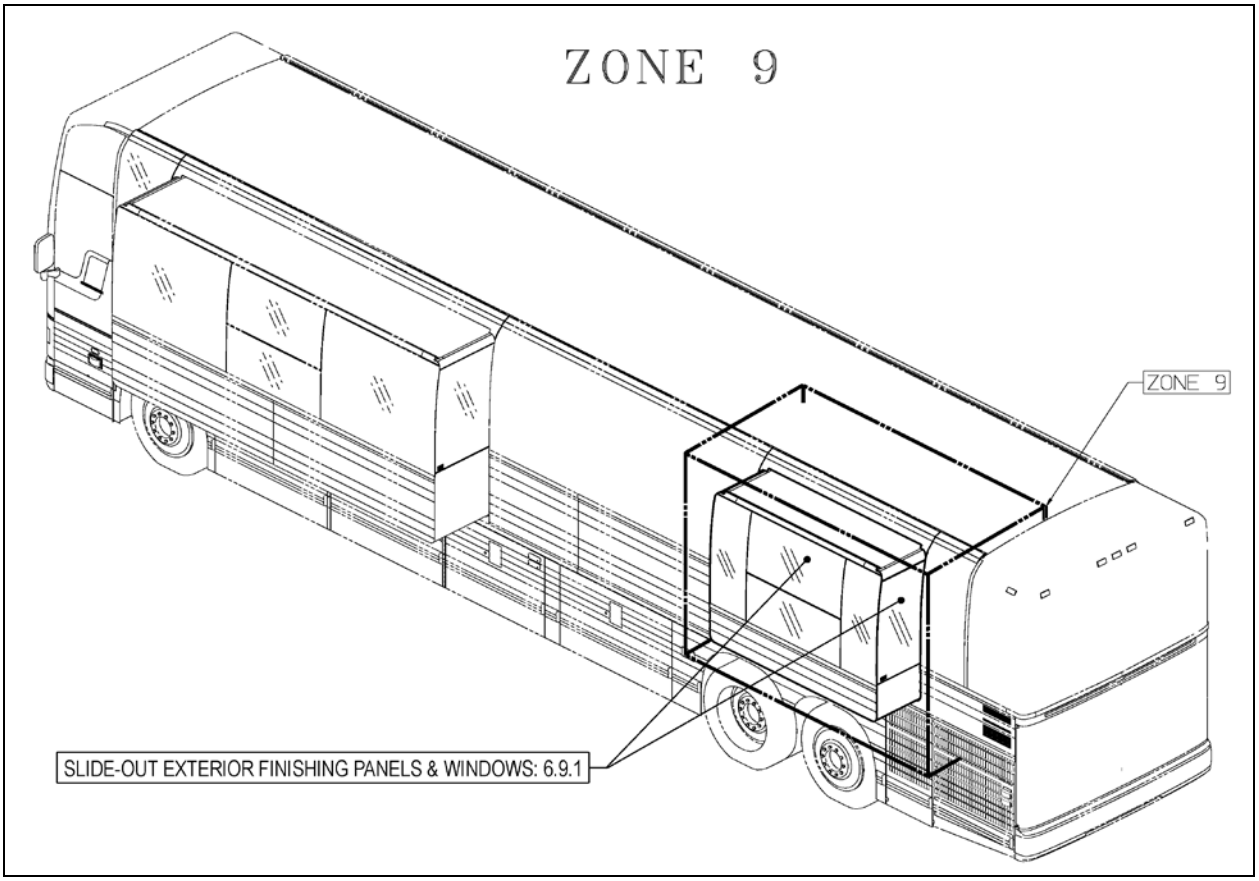

FIGURE 134: ZONE 9

10.9.1 Slide-Out Exterior Finishing Panels & Windows

For maintenance and procedures, refer to paragraphs on the vehicle's finishing panels and windows.

Methods, procedures, tools, cleaning products, adhesives and other products are the same as those used for the vehicle body.

10.10 BODY PANEL AND WINDOW SPACING FOR X3-45 VIP NOT FITTED WITH SLIDE-OUT

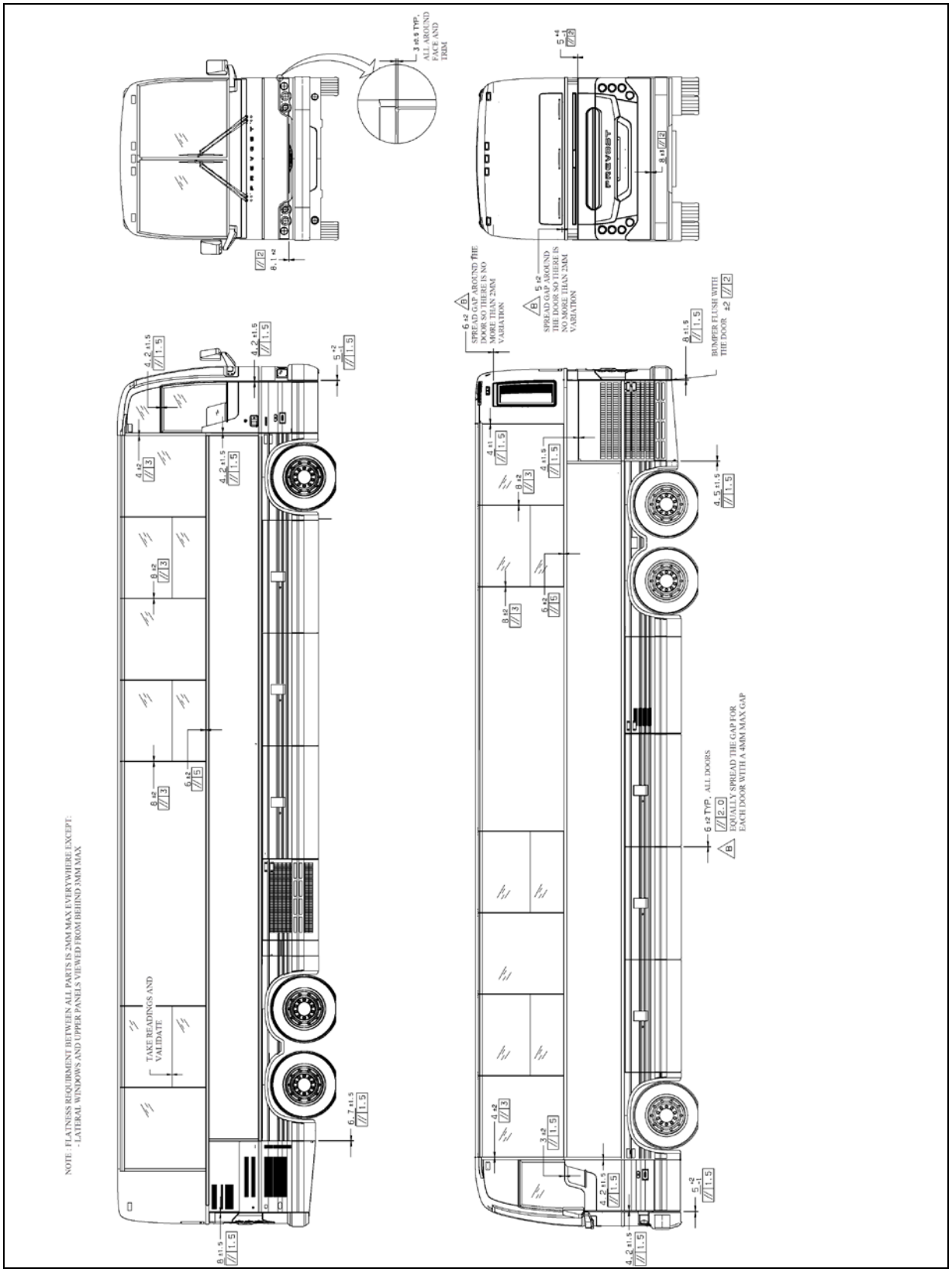

FIGURE 135: BODY PANEL & WINDOW SPACING FOR X3-45 VIP NOT FITTED WITH SLIDE-OUT

10.11 BODY PANEL AND WINDOW SPACING FOR X3-45 VIP WITH FRONT AND REAR SLIDE-OUT

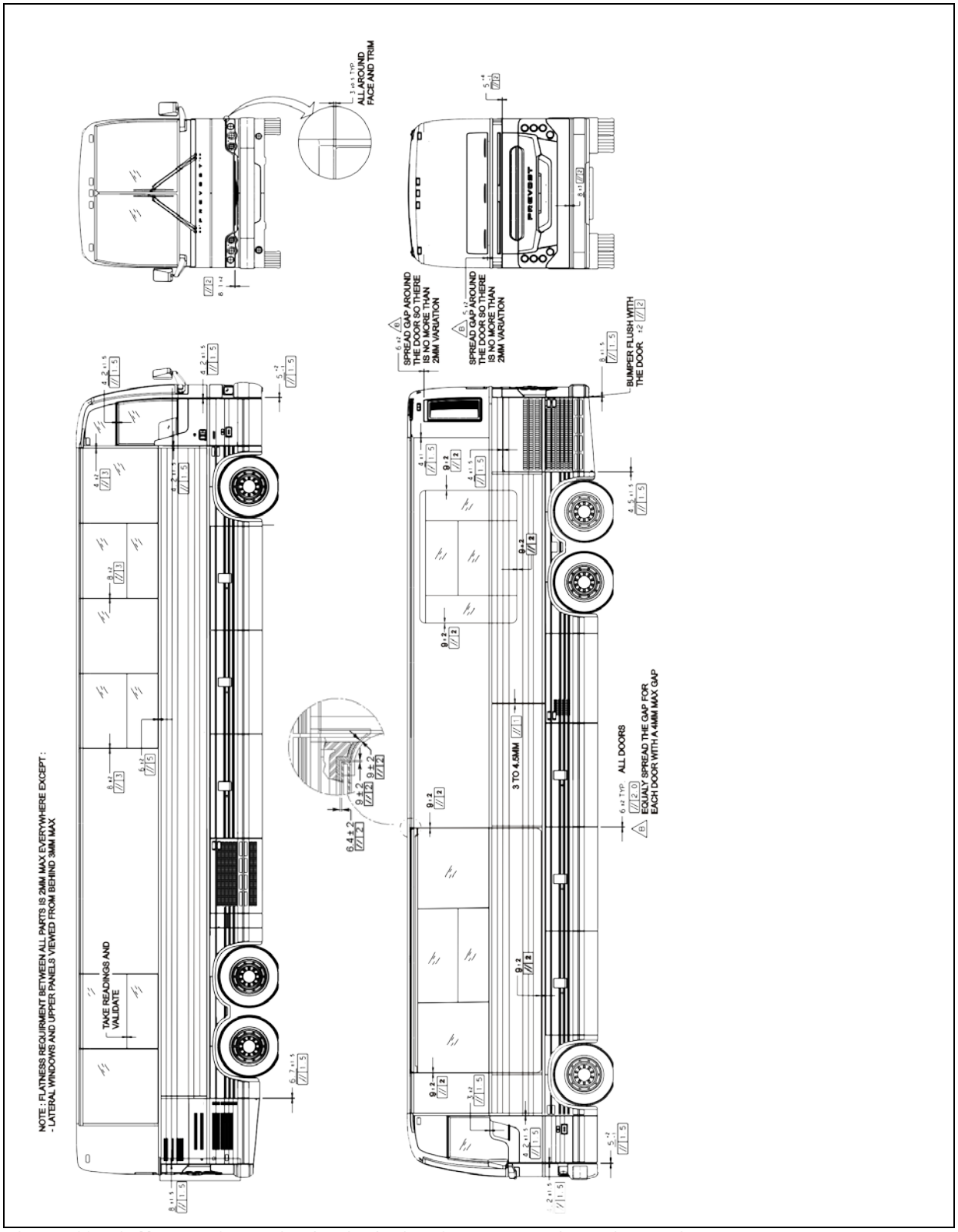

FIGURE 136: BODY PANEL & WINDOW SPACING FOR X3-45 VIP WITH SLIDE-OUT, FRONT AND REAR

10.12 BODY PANEL AND WINDOW SPACING FOR X3-45 VIP FITTED WITH FRONT SLIDE-OUT

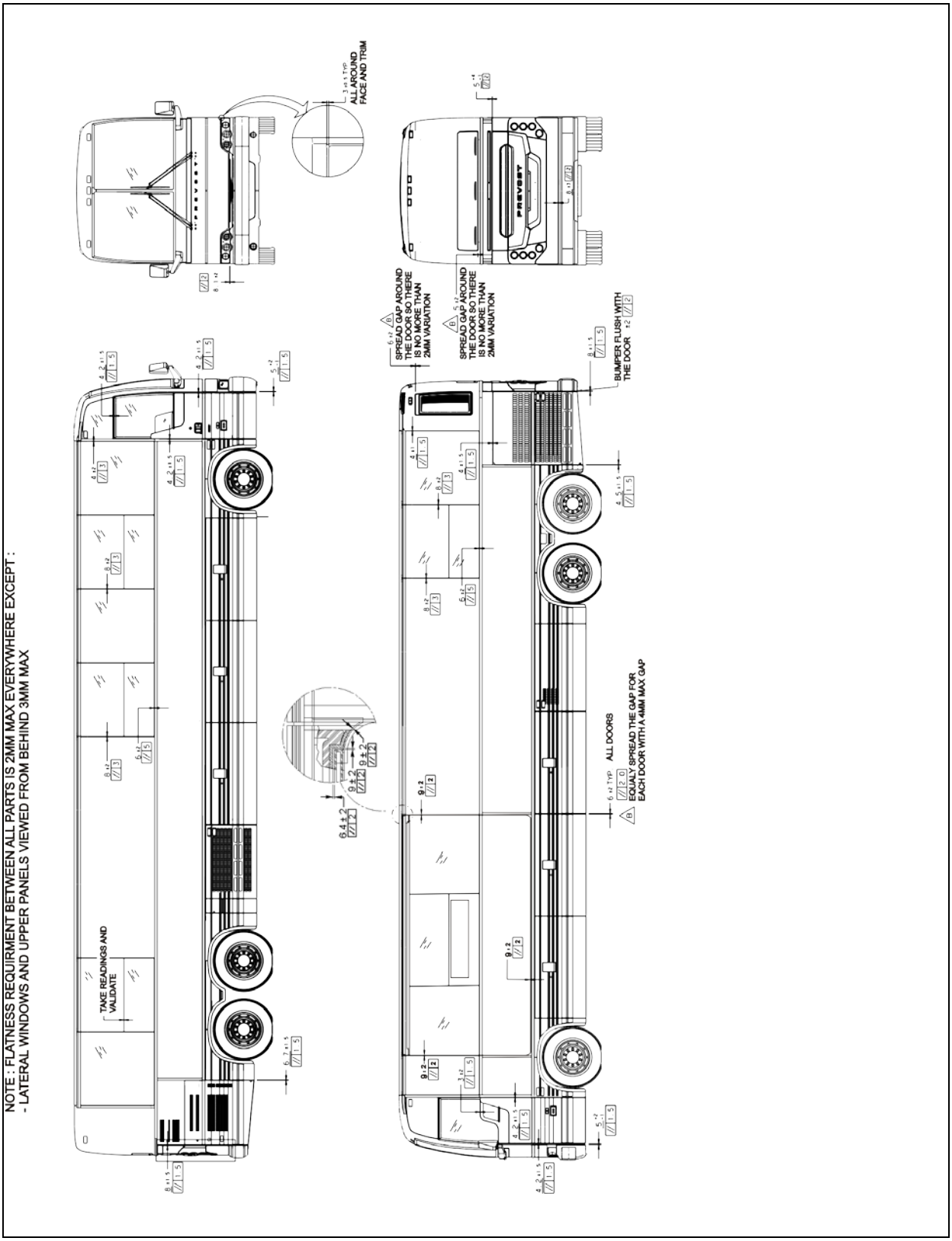

FIGURE 137: BODY PANEL & WINDOW SPACING FOR X3-45 VIP WITH SLIDE-OUT, FRONT

11 SPECIFICATIONS

Door cylinder

Manufacturer ..... Bimba
Type ..... Pneumatic
I.D. ..... 1½" (mm)
Stroke ..... 8" (mm)
Prevost number 780595

Damper

Manufacturer ..... Koni
Prevost number 780565

Lock cylinder (upper)

Manufacturer ..... Bimba
Type ..... Air, single action, 1/8 NPT, hexagonal rod
I.D. ..... 7/8" (22 mm)
Stroke ..... 1" (25 mm)
Prevost number 641392

Lock cylinder (central)

Manufacturer ..... Bimba
Type ..... Air, single action, ¼ NPT
I.D. ..... 1¾" (45 mm)
Stroke ..... 1" (25 mm)
Prevost number 641209

Manifold solenoid

Manufacturer ..... Norgren
Type ..... 4 ports, 1/8 NPT
Voltage ..... 24 VDC
Power consumption ..... 6 watts
Maximum pressure ..... 150 psi (1035 kPa)
Prevost number 641448

Solenoid valve (Latching valve)

Manufacturer ..... Humphrey
Model 310
Operating range ..... 0 to 125 psi (0 to 860 kPa)
Voltage ..... 24 VDC
Voltage tolerance ..... +10%, -15% of rated voltage
Power consumption ..... 4 watts
Leak rate (max allowed) ..... 0.245 in3/min @ 100 psi (4cc/min @ 690 kPa)
Type of operation ..... Direct solenoid
Lubrication ..... Not required (factory pre-lubed)
Filtration ..... 40 micron recommended
Prevost number 641412

Pressure switch assembly

Prevost number 452831

MAINTENANCE INFORMATION

MI15-18

DATE :	MAY 2015	SECTION : 18 - Body
SUBJECT :	**STRUCTURE INSPECTION FOR CORROSION - HOW TO PREVENT CORROSION**	

IMPORTANT NOTICE
This maintenance is recommended by Prevost to increase your vehicle's performance. Note that no reimbursement will be awarded for carrying out this maintenance.

APPLICATION

Model	VIN
All Prevost models	

DESCRIPTION

This procedure was made in order to support Prevost customers who are worried about their vehicle structure behavior due to corrosion.

Five year old vehicles and older should be subjected to a thorough structural inspection; especially if clear signs of moderate or deep corrosion are visible. The inspection can be conducted as described in the following procedure.

In this procedure, you will find information about:

1) The important areas that should be inspected

2) When a structural inspection should be carried out

3) How to perform the inspection

4) What can be done to optimize corrosion protection during your vehicle's life

STRUCTURE INSPECTION – CORROSION	
DESCRIPTION	**INTERVAL**
Perform structural inspection for corrosion as described in this document	**Normal duty cycle vehicles and normal environment operation** Every 5 years starting from the 5th year in service
	Severe duty cycle vehicles and harsh environment operation Every 2 years starting from the 5th year in service
	Whenever a *visual inspection* discloses that corrosion seems to have caused damages to the structure such as perforation, flaking, separation of metal layers, loss of material, etc.

CAUTION

Reject member, chassis component, axle, etc. if:

Cracked, broken, separated by corrosion or corroded to a depth as to weaken member so as to affect the safety and structural integrity of the vehicle.

DANGER

Park vehicle safely, apply parking brake, stop engine. Prior to working on the vehicle, set the ignition switch to the OFF position and trip the main circuit breakers equipped with a trip button. On Commuter type vehicles, set the battery master switch (master cut-out) to the OFF position.

THE IMPORTANT AREAS THAT SHOULD BE INSPECTED

Front & rear sub-frames, drive axle cradle and tag axle (FIGURE 1) on Prevost structures are made of high strength steel. Although the structure on a Prevost vehicle receives a beneficial corrosion preventive compound application at the end of the manufacturing process, after many years of service with exposure to harsh environments (winter, frequent rains, road salt, stone projection, sand accumulation, etc.), the carbon steel can be subject to severe corrosion. The use of high strength steel remains a requirement to withstand peak loads.

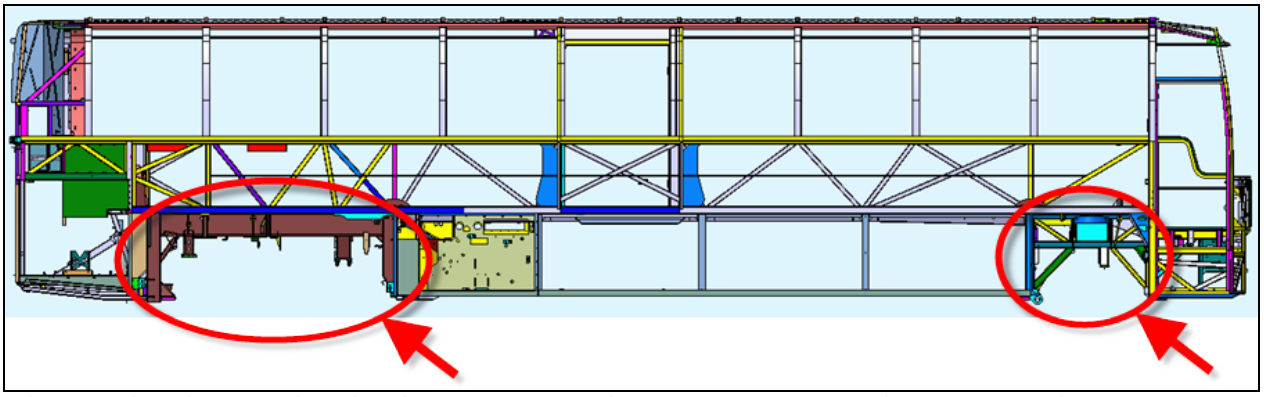

FIGURE 1 – CRITICAL AREAS: FRONT SUB-FRAME, REAR SUB-FRAME, DRIVE AXLE CRADLE AND TAG AXLE

WHEN SHOULD A STRUCTURE INSPECTION BE CARRIED OUT?

Vehicles operating in harsh environments without an appropriate corrosion protection compound applied to the front and rear sub-frames, drive axle cradle and tag axle could be subject to corrosion. If parts of the tag axle or front and rear sub-frames structures present metal flaking, separation of metal layers, loss of material, perforation, etc. then they should be inspected in order to confirm that the minimum wall thickness remains (FIGURE 2 to FIGURE 5).

FIGURE 2: METAL FLAKING. ACCUMULATED SAND AS SHOWN ON THE IMAGE SHOULD NOT BE LEFT IN PLACE

FIGURE 3: METAL FLAKING AND ACCUMULATED SAND

FIGURE 4: METAL FLAKING ON TAG AXLE - ACCUMULATED MATTER WILL RETAIN WATER THUS CREATING CONDITIONS PROMOTING ADDITIONAL CORROSION

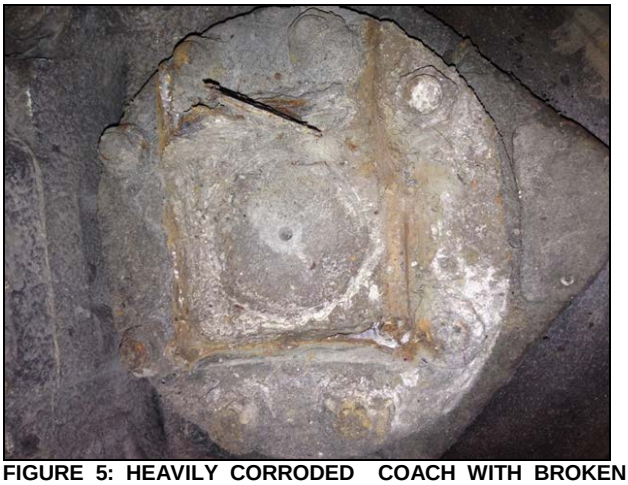

FIGURE 5: HEAVILY CORRODED COACH WITH BROKEN TAG AXLE. THIS IMAGE SHOWS THE SPINDLE MOUNTING PLATE SEPARATED FROM THE REST OF THE TAG AXLE

STRUCTURE INSPECTION PROCEDURE

The thickness of main carbon steel parts on rear & front sub-frames, drive axle cradle and tag axle beam must be **at least 1/8 inch (0.125") (3mm)**. There are two options to properly monitor the wall thicknesses:

1- Using an ultrasonic wall thickness gauge.

2- Drilling holes and measuring wall thickness.

1- Structural Inspection Procedure Using Ultrasonic Wall Thickness Gauge

The ultrasonic wall thickness gauge has to be used on bare metal. The surface where the gauge will be put on has to be cleaned of rust, paint or other material. If the thickness is more than 1/8 inch (3mm), repaint the cleaned surface to prevent corrosion from occurring on this spot.

Use a grinder or another tool to remove rust or paint on the spot to check. The gauge has to be placed on the center of the cleaned spot. The gauge has to be perpendicular to the surface to get an accurate measure.

Inspection using ultrasonic wall thickness gauge is recommended over drilling holes because it minimize risk of altering the vehicle structure.

FIGURE 6: CLEANED SPOT ON STRUCTURAL MEMBER

2- Structural Inspection Procedure Using Drilled Holes

Drill a ¼ inch (6 mm) diameter hole in the most corroded wall of the part being checked. Use a caliper to measure the thickness of the drilled metal. Wall thickness should be at least 1/8 inch (0.125") (3mm). Drilled hole must then be welded (filled with metal) and repainted after measurement to prevent water infiltration and corrosion from occurring around the hole.

Clean/remove flaking rust on frame. Drill hole in the most corroded wall. The hole must be welded after to prevent corrosion and water infiltration. Filled hole must be painted to prevent corrosion.

CAUTION

Holes and welding can increase the risk of crack initiation. **Ultrasonic wall thickness gauge method is recommended.**

FIGURE 7: HOLE DRILLED IN STRUCTURAL MEMBER

CORROSION PROTECTION ON OLD AND CORRODED FRAME

To maximize corrosion resistance on older frame exposed to harsh environment:

1) Clean rust on frame. If available, use sand blasting.

2) Apply a zinc-rich primer on cleaned surfaces.

3) Cover carbon steel parts with corrosion preventive compound Tectyl 185GW.

CAUTION
Avoid primer, paint, and corrosion preventive compounds on pneumatic valves and rubber bushings.

FIGURE 8: CLEAN RUST

PROTECTION TO PREVENT CORROSION

Tectyl 185GW should be used to prevent corrosion propagation on frame.

1) Clean rust and dirt on the frame.

2) Apply Tectyl following the manufacturer's recommendation.

3) Apply Tectyl every year or as needed.

CAUTION
Avoid primer, paint, and corrosion preventive compounds on pneumatic valves and rubber bushings.

For more details on Tectyl 185GW, see QC Lubricants web site:

http://www.qclubricants.com/TECTYL185GWBlack.htm

FIGURE 9: TECTYL 185GW BLACK APPLICATION

Tectyl 185GW Black

QC Lubricants carries Tectyl 185GW Black in pails and drums.

TECTYL® 185GW Black is a solvent cutback, thixotropic corrosion preventive compound. The dry film is semi-firm and has a semi-gloss appearance. TECTYL® 185GW Black provides outstanding protection in marine, tropical, and industrial environments, and is widely used for transportation equipment. TECTYL® 185GW Black possesses dielectric strength of 800 volts per dry mil of coating. TECTYL® 185GW Black provides galvanic corrosion protection and can be applied on battery terminals for insulating purposes.

PARTS / WASTE DISPOSAL

Discard according to applicable environmental regulations (Municipal/State[Prov.]/ Federal)

Access all our Service Bulletins on https://secureus5.volvo.com/technicalpublications/en/pub.asp
Or scan the QR-Code with your smart phone.

*E-mail us at **technicalpublications_prev@volvo.com** and type "ADD" in the subject to receive our warranty bulletins by e-mail.*

MAINTENANCE INFORMATION

MI15-41

DATE : AUGUST 2015	SECTION : 18 - Body
SUBJECT : CRACKING OF POLYCARBONATE TAILLIGHTS CAUSED BY INAPPROPRIATE CLEANING PRODUCTS	

APPLICATION

Model	VIN
ALL MODELS	

DESCRIPTION

Prevost would like to remind its customers that only **cleaning products designed for external washing of vehicles** should be used for exterior vehicle wash and in particular, for the washing of polycarbonate taillights.

POLYCARBONATE CRACKING

Degreasers designed to clean motors **must not be used** to clean the engine compartment door. These products are not compatible with polycarbonate. They cause cracking of the polycarbonate taillights housing and cracking of the bosses in which the mounting threaded rods are inserted (figures 2 & 3).

CLEANING PRODUCT COMPATIBLE WITH POLYCARBONATE

Cleaning products designed for external washing of vehicles shall be used to clean your vehicle. Prevost suggests a high PH cleaner compatible with polycarbonate. See the description of the product in the following table

Part No	Description	Qty
686037	EXTERIOR CLEANER (BODY)	1 gallon / 4 liters
686036	EXTERIOR CLEANER (BODY)	5.28 gallons / 20 liters
685841	EXTERIOR CLEANER (BODY)	55 gallons / 210 liters

NOTE
Material can be obtained through regular channels.

High PH cleaning product compatible with polycarbonate - product sheet

Traffic film remover

Will not make plastics crack

Perfect for trucks, cars, trains, buses and machinery. Safe for all types of plastics including polycarbonate. Designed for automatic or pressure washing.

ADVANTAGES

- Easily removes traffic film, insects and grease.
- Safe for car and truck paint.
- Safe for use on metal, rubber, chrome, glass and plastic surfaces.
- Does not leave any deposit.
- Concentrated.
- Eco-friendly.
- Easy to rinse.
- Dries evenly.

DIRECTIONS

Pressure washing :

1. Use product accordingly to dilution ratio.
2. Spray evenly on vehicle surface starting by the bottom.
3. Rinse thoroughly with cold or lukewarm water.

MORE DETAILS

Do not wash in direct sunlight. Do not allow product to dry on surface.

DILUTION RATIO

DIRT	RATIO
Mild	1 oz / 20 oz 50 ml / L
Average	1 oz / 10 oz 100 ml / L
Strong	1 oz / 6.67 oz 150 ml / L

PRECAUTIONS

Avoid all contact with eyes.
Avoid all contact with skin.
Wash hands with soap and water after handling.

FIRST AID

- Skin: Wash contaminated skin with soap and water.
- Eyes: Flush immediately with running water for at least 15 minutes, occasionally lifting the upper and lower eyelids. Seek medical help.
- Ingestion: Do not induce vomiting. If the person is conscious, have them drink several glasses of water or milk. Seek medical help.

PHYSICAL ATTIBUTE

PHYSICAL STATE:	Liquid
APPEARANCE:	Clear
COLOR:	Transparent
SCENT:	Chemical
PH:	13.1
DENSITY (25°C):	1.1

SECURITY

HEALTH	1
FLAMMABILITY	0
REACTIVITY	0
PERSONAL ROTECTION	B

0 =	NEGLIGIBLE
1 =	LOW
2 =	MODERATE
3 =	HIGHT
4 =	EXTREME

FIGURE 1: PRODUCT SHEET

IMAGES SHOWING THE CRACKING ISSUE

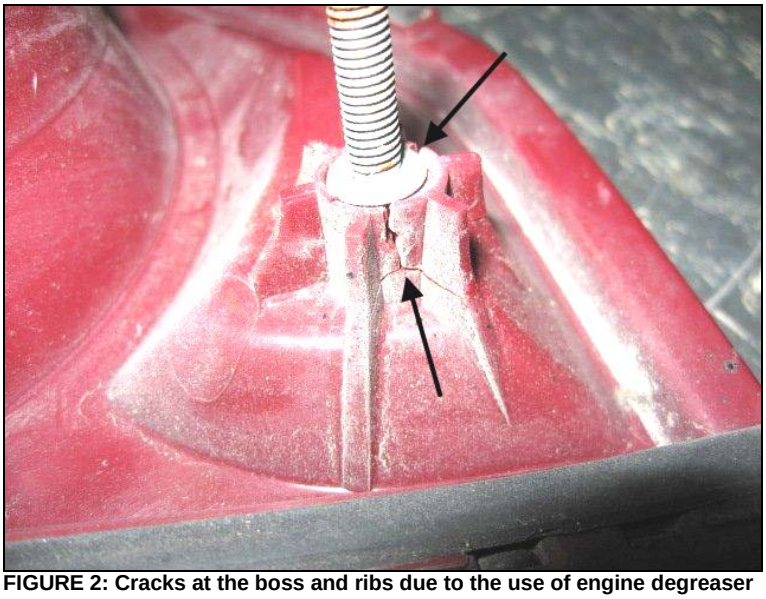

FIGURE 2: Cracks at the boss and ribs due to the use of engine degreaser

FIGURE 3: Cracking of the outer surface of the taillight due to the use of engine degreaser

Access all our Service Bulletins on https://secureus5.volvo.com/technicalpublications/en/pub.asp
Or scan the QR-Code with your smart phone.

*E-mail us at **technicalpublications_prev@volvo.com** and type "ADD" in the subject to receive our warranty bulletins by e-mail.*

CONTENTS

1. TORQUE TABLES 5

1.1 HIGH CAPACITY COMPRESSOR (CENTRAL HVAC SYSTEM) 5
1.2 HIGH/LOW PRESSURE SERVICE AND RECEIVER TANK VALVES 6
1.3 IDLERS & TENSIONERS 6
1.4 SMALL A/C SYSTEM X3-45 VIP 7

2. HVAC SYSTEM OVERVIEW 8

2.1 CENTRAL HVAC SYSTEM EVAPORATOR COMPARTMENT ARRANGEMENT 8
2.2 CENTRAL HVAC SYSTEM – H SERIES 9
2.3 CENTRAL HVAC SYSTEM – X SERIES 12
2.4 SMALL HVAC SYSTEM – H SERIES 14
2.5 SMALL HVAC SYSTEM – X SERIES 16

3. HVAC SYSTEM BASIC MAINTENANCE 18

3.1 COIL CLEANING 18
3.1.1 Driver's Unit 18
3.1.2 Passenger's Unit 18
3.2 DRIVER'S UNIT AIR FILTER 19
3.3 PASSENGER'S UNIT AIR FILTER – H3 SERIES 19
3.4 PASSENGER'S UNIT AIR FILTER – X3 SERIES 20
3.5 OVERHEAD COMPARTMENT FAN AIR FILTER 20
3.6 COMPRESSOR BELTS 21
3.6.1 Belt Replacement – Central System 21
3.6.2 Belt Tension Adjustment – Central System 21
3.6.3 Belt Tension Adjustment – Small HVAC System H-SERIES 22
3.6.4 Belt Tension - Small HVAC System X-SERIES 22
3.7 TORCH BRAZING 22
3.8 SOLDERING 23

4. HVAC SYSTEM COMPONENTS 23

4.1 COMPRESSOR – CENTRAL A/C SYSTEM 23
4.1.1 Suction and Discharge Hose Connection 23
4.1.2 Compressor Maintenance 23
4.1.3 Oil Level Check and Oil Change 23
4.1.4 Troubleshooting Guide 24
4.1.5 Electro-Magnetic Clutch 25
4.2 COMPRESSOR – SMALL HVAC SYSTEM 25
4.2.1 Removal - When the Compressor Is Operational 25
4.2.2 Removal - When the Compressor Is Inoperable 25
4.3 BRUSHLESS EVAPORATOR MOTOR 25
4.3.1 Removal 26
4.3.2 Installation 26
4.4 CONDENSER (CENTRAL A/C) 27
4.4.1 Condenser Fan Control 27
4.4.2 Condenser Fan Removal 28
4.5 CONDENSER (SMALL A/C) 28
4.6 RECEIVER TANK 29
4.7 FILTER-DRYER 30
4.7.1 Replacement of the Filter-Dryer After Pumping Down 30
4.8 MOISTURE INDICATOR 30

4.9 SHUT-OFF VALVE WITH SERVICE PORT 32
4.10 LIQUID REFRIGERANT SOLENOID VALVE 32
4.10.1 Typical malfunctions 32
4.10.2 Electrical Bypass/On Demand Opening of liquid refrigerant solenoid valves 33
4.10.3 Coil Replacement 33
4.10.4 Valve Disassembly 33
4.10.5 Valve Reassembly 33
4.11 THERMOSTATIC EXPANSION VALVE 34
4.11.1 Central System 34
4.11.2 Superheat Adjustment 35
4.11.3 Maintenance 36
4.11.4 Driver's Unit 36
4.12 HOT WATER PNEUMATIC VALVE 36
4.12.1 Valve Troubleshooting 38
4.13 HOT WATER CIRCULATING PUMP 38
4.13.1 Central HVAC system 38
4.13.2 Small HVAC system 39
4.13.3 Removal 39
4.13.4 Installation 39

5. HVAC SYSTEM TESTING AND TROUBLESHOOTING 40

5.1 ON DEMAND DISPLAY OF A/C SYSTEM HIGH AND LOW SIDE PRESSURE 40
5.2 ON DEMAND ACTIVATION OF HOT WATER CIRCULATING PUMP 40
5.3 TEMPERATURE SENSORS 41
5.4 TEST MODE FOR SWITCHES AND SENSORS 41
5.5 TEST MODE FOR ELECTRIC MOTORS 42
5.6 MODES OF OPERATION 42
5.7 HVAC ELECTRICAL SYSTEM TROUBLESHOOTING 43
5.7.1 Air Conditioning 45
5.7.2 Expansion Valve 47
5.8 TEMPERATURES & PRESSURES CHART 48
5.9 LEAK TESTING 48

6. CENTRAL HVAC SYSTEM 48

6.1 AIR CIRCULATION IN DRIVER'S AREA 49
6.2 AIR CIRCULATION IN PASSENGER'S AREA 50
6.3 HVAC SYSTEM OPERATION 51
6.3.1 Control Unit 51
6.3.2 Overhead Compartment Unit 51
6.4 HEATING 52
6.4.1 Driver's Unit Hot Water Pneumatic Valve 52
6.4.2 Passenger's Unit Hot Water Pneumatic Valve 52
6.4.3 Draining Heating System 52
6.4.4 Filling Heating System 55
6.4.5 Bleeding Heating System 55
6.5 COOLING 56
6.5.1 Refrigeration Cycle 56
6.5.2 Refrigerant 56
6.5.3 Refrigerant System Clean-out After Compressor Failure 58
6.5.4 Pumping Down 59
6.5.5 Adding Vapor State Refrigerant 61
6.5.6 Charging System 62
6.6 LIQUID REFRIGERANT RECOVERY 63

6.7 EVACUATING SYSTEM 63

7. SMALL HVAC SYSTEM 64

7.1 SYSTEM CONFIGURATION H-SERIES 64
7.2 SYSTEM CONFIGURATION X SERIES 64
7.3 AIR CIRCULATION 64
7.3.1 Auxiliary Unit 65
7.4 SYSTEM OPERATION 65
7.4.1 Driver's Unit 65
7.4.2 Auxiliary Unit - H3 VIP Vehicles Only 65
7.5 REFRIGERANT RECOVERY 65
7.6 EVACUATING SYSTEM PRIOR ADDITION OF REFRIGERANT (DRIVER'S OR AUXILIARY SYSTEM) 65
7.7 OIL ADDITION 66
7.8 COMPRESSOR OIL CONTAMINATION 66
7.9 OIL RETURN OPERATION 66

8. PREHEATING SYSTEM (OPTION) 66

8.1 PREHEATER FUEL FILTER 67
8.2 OPERATION 67
8.3 PREHEATING SYSTEM TIMER 68
8.3.1 Preheater timer instructions 68
8.4 PREHEATER TROUBLESHOOTING AND MAINTENANCE 68

9. SPECIFICATIONS 70

SECTION CHANGE LOG

	DESCRIPTION	DATE
1	Added low pressure switch on High capacity A/C compressor. From J-7446 (X series US), J-6245 (X series CAN), J-3997 (H series).	Nov. 2017
2		
3		
4		
5		
6		

1. TORQUE TABLES

1.1 HIGH CAPACITY COMPRESSOR (CENTRAL HVAC SYSTEM)

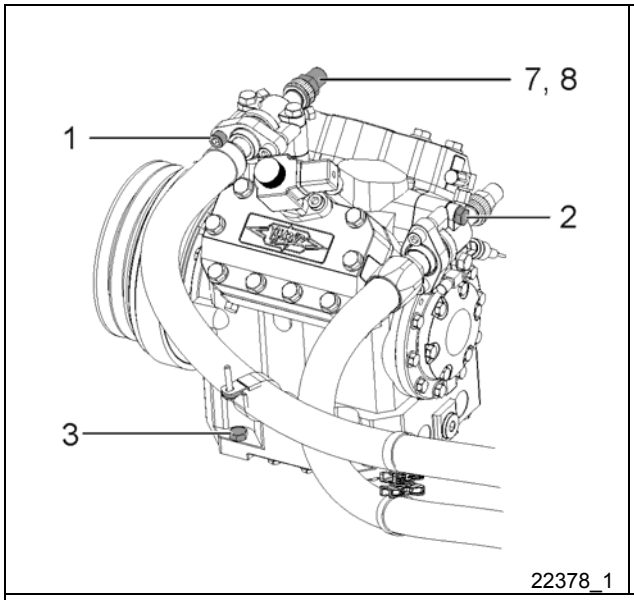

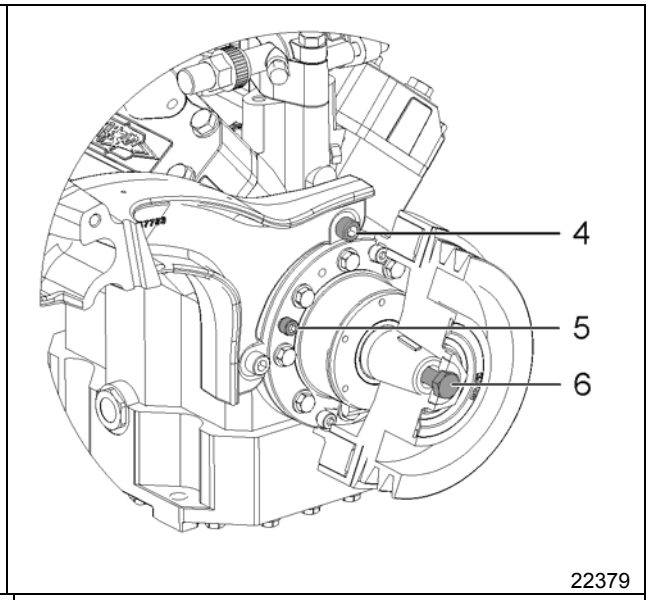

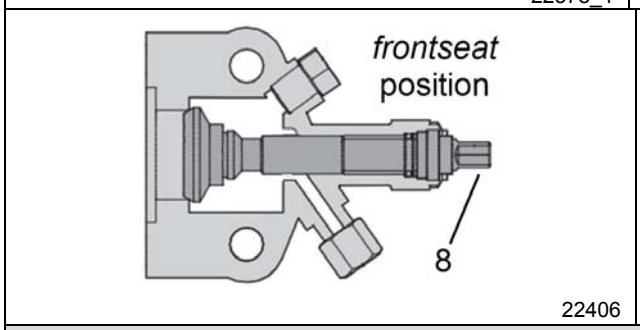

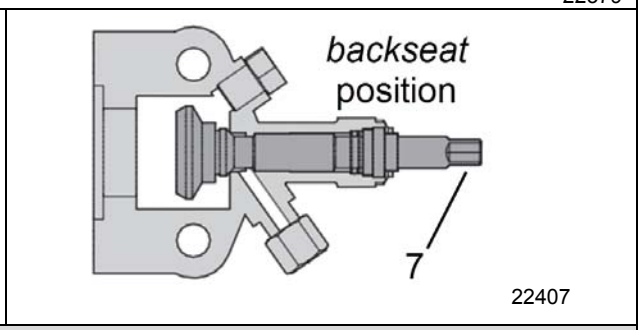

HIGH CAPACITY COMPRESSOR (CENTRAL HVAC SYSTEM)		
No	DESCRIPTION	TORQUE
1	Compressor flange connection screws	31-35 lb-ft (42-47 Nm)
2	Compressor discharge & suction port screws	38-42 lb-ft (52-57 Nm)
3	Compressor mounting bolts	74 lb-ft (100 Nm)
4	Support arm to compressor screws	38-42 lb-ft (52-57 Nm)
5	Clutch to compressor screws	20-24 lb-ft (27-33 Nm)
6	Clutch pulley to compressor shaft screw	58-62 lb-ft (79-84 Nm)
7	A/C service valve *backseat* position	Max 12 lb-ft (16 Nm)
8	A/C service valve *frontseat* position	Max 21 lb-ft (28 Nm)

1.2 HIGH/LOW PRESSURE SERVICE AND RECEIVER TANK VALVES

1-HIGH PRESSURE SERVICE VALVE	2-LOW PRESSURE SERVICE VALVE	3-RECEIVER TANK VALVE
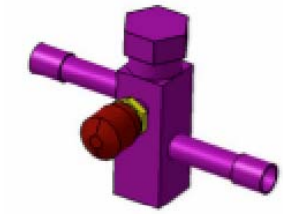	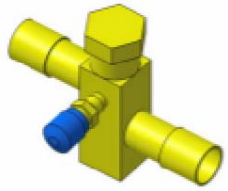	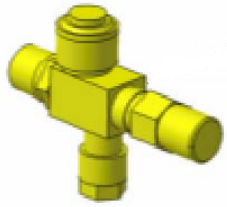

SERVICE AND RECEIVER TANK VALVE		
No	DESCRIPTION	TORQUE
1	High pressure service valve (both positions)	43 lb-ft (58 Nm)
2	Low pressure service valve (both positions)	21 lb-ft (28 Nm)
3	Receiver tank valve (both positions)	21 lb-ft (28 Nm)

1.3 IDLERS & TENSIONERS

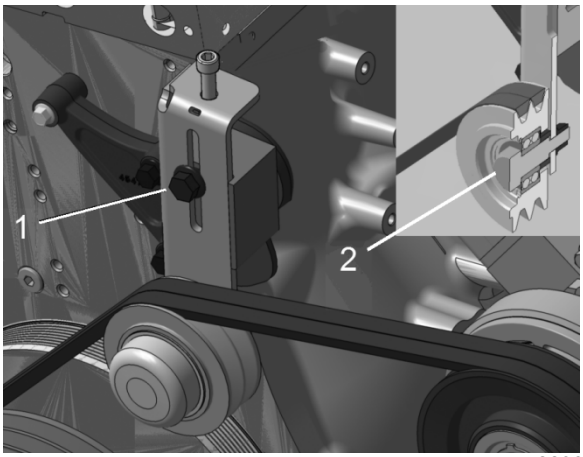

22381

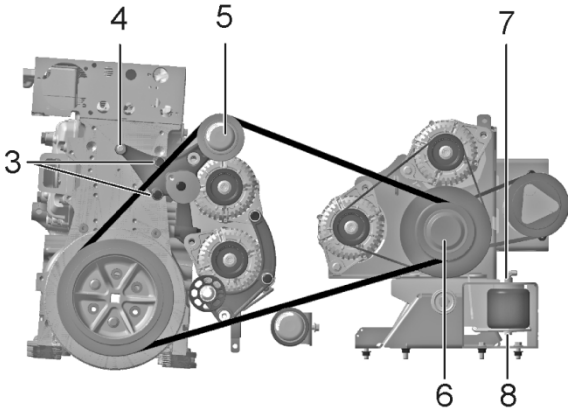

22382_1

IDLERS & TENSIONERS		
No	DESCRIPTION	TORQUE
1	Central A/C tensioner lock bolt	43 lb-ft (58 Nm)
2	Central A/C tensioner idler shaft bolt (M12 shoulder bolt)	31.5-38.5 lb-ft (43-52 Nm)
	Central A/C tensioner idler shaft bolt (M12 x 1.75 std bolt)	59 lb-ft (80 Nm)
3	Idler support bolt	21 lb-ft (28 Nm)
4	Idler support bolts	43 lb-ft (58 Nm)
5	Small A/C idler shaft bolt	135-165 lb-ft (183-224 Nm)
6	Small A/C / alternator transfer pulley shaft nut	135-165 lb-ft (183-224 Nm)
7	Air spring connection fitting nut	15-20 lb-ft (20-27 Nm)
8	Air spring mounting screw	15-20 lb-ft (20-27 Nm)

1.4 SMALL A/C SYSTEM X3-45 VIP

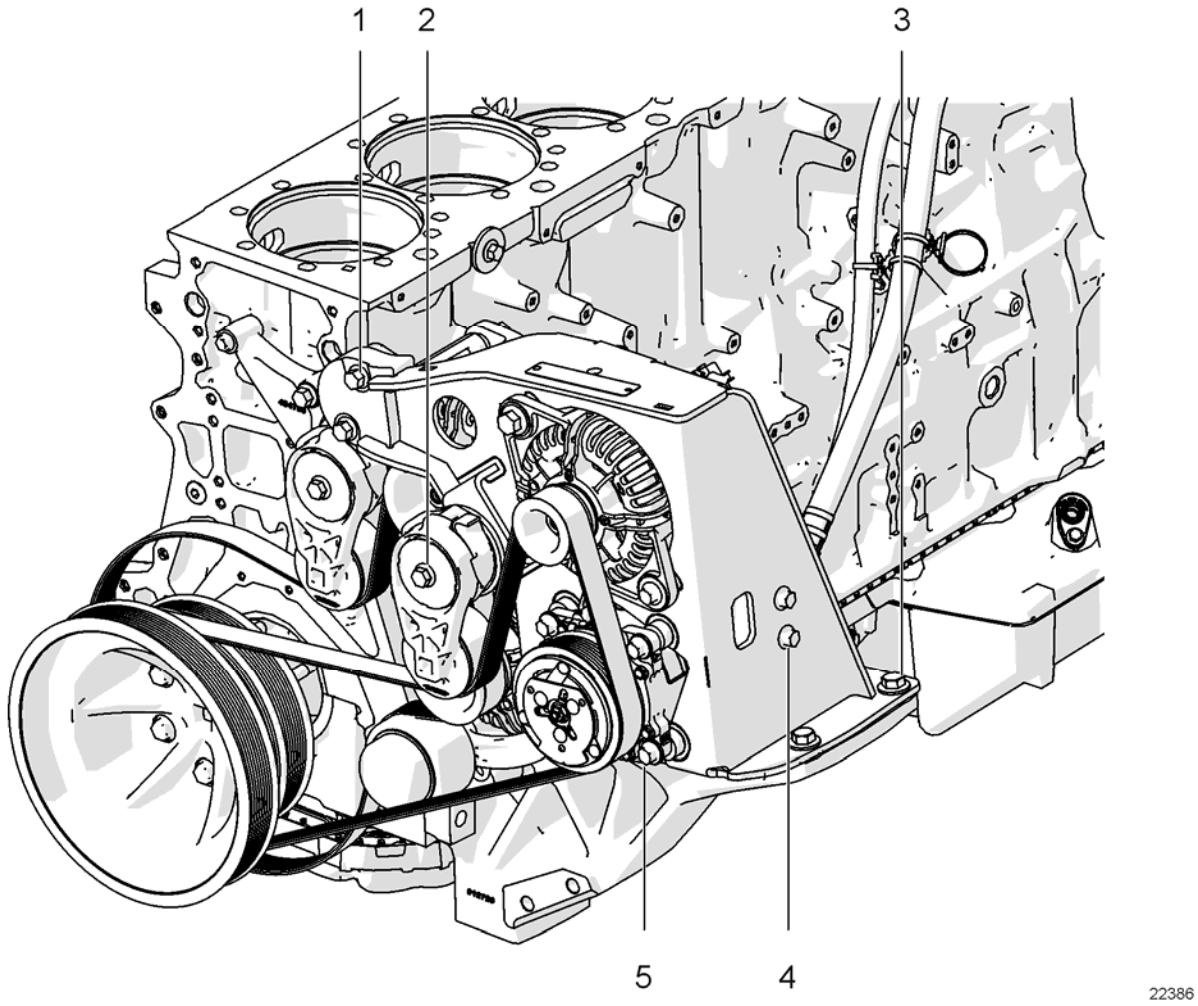

SMALL A/C SYSTEM X3-45 VIP		
No	DESCRIPTION	TORQUE
1	Upper mounting screws	48 lb-ft (65 Nm)
2	Belt Tensioner	48 lb-ft (65 Nm)
3	Lower mounting screws	82 lb-ft (111 Nm)
4	Compressor mounting fore bracket screws	35 lb-ft (47 Nm)
5	Compressor mounting screws	35 lb-ft (47 Nm)

2. HVAC SYSTEM OVERVIEW

The vehicle interior is pressurized by its Heating Ventilation and Air Conditioning (HVAC) system. Two HVAC systems are available: Small HVAC System and Central HVAC System.

Small HVAC System
- Driver's unit only
- Driver's unit with auxiliary system (H3 VIP only)

Central HVAC System
- Driver's unit and passengers' unit with optional overhead compartment A/C system and optional upper windshield defrost unit

If the vehicle is equipped with a Central HVAC System; air flow and controls divide the vehicle in two areas: driver's area and passengers' area. Each section has its own fresh air, returning air and discharge air ducting. Each section has its own evaporator coil and heater core but both sections share the same condenser

The exhaust is mainly done through the lavatory ventilator and through normal air-tightness losses.

NOTE
Air conditioning *Air conditioning is the artificial treatment of air to render the living conditions of persons more comfortable and healthful. Complete air conditioning involves adjustment and control of following operations performed on the air supply :* *Heating or cooling; Dehumidification; Ventilation; Filtering;*

2.1 CENTRAL HVAC SYSTEM EVAPORATOR COMPARTMENT ARRANGEMENT

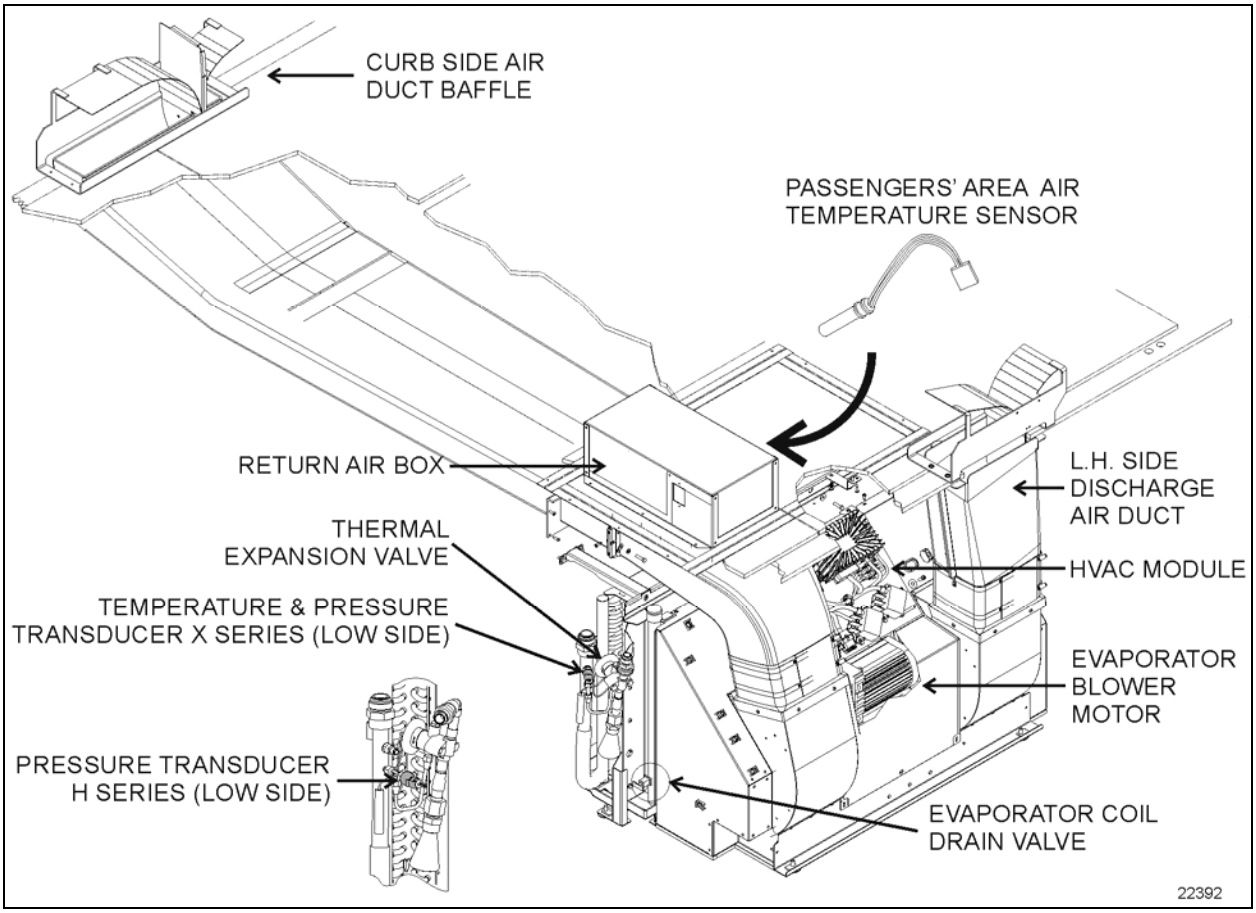

FIGURE 1: EVAPORATOR COMPARTMENT AND DISCHARGE DUCTING ARRANGEMENT

2.2 CENTRAL HVAC SYSTEM – H SERIES

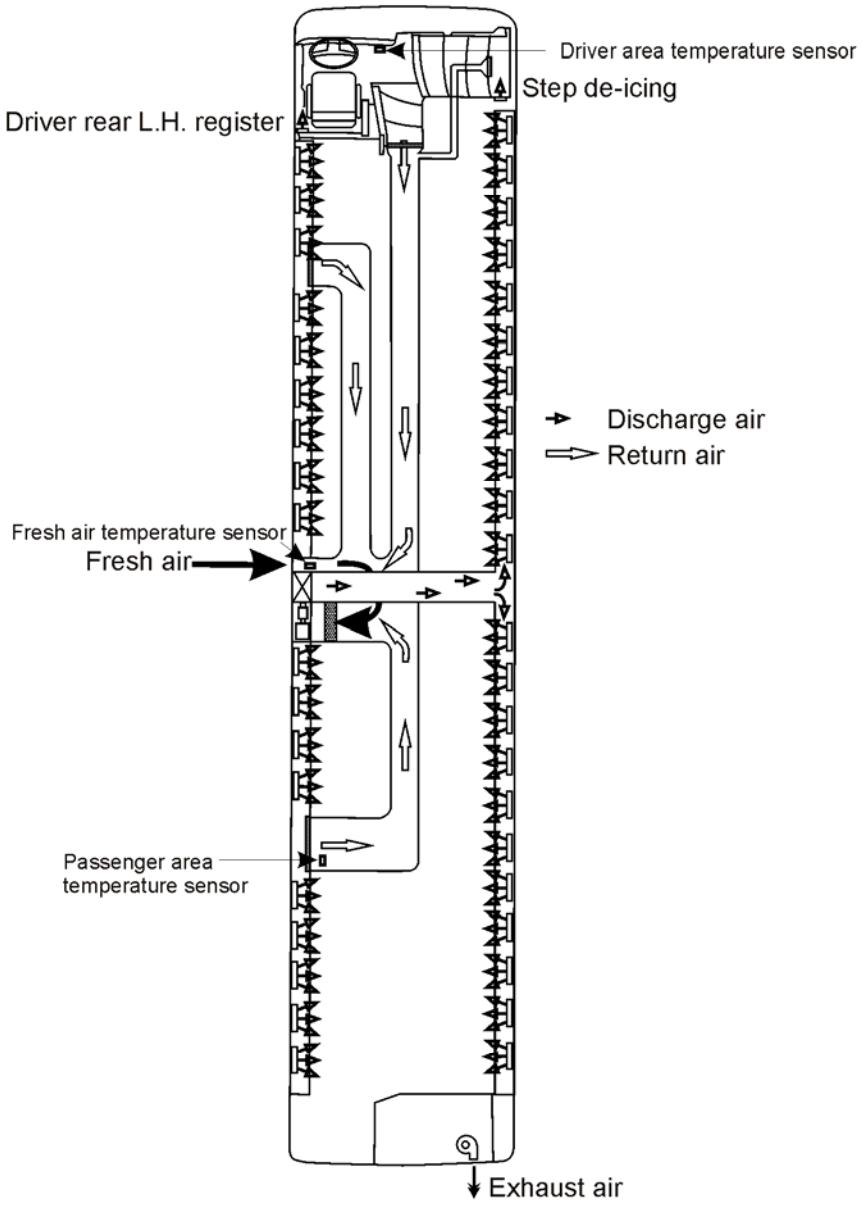

FIGURE 2: H3 COACHES CENTRAL HVAC SYSTEM – PASSENGER'S UNIT AIR CIRCULATION

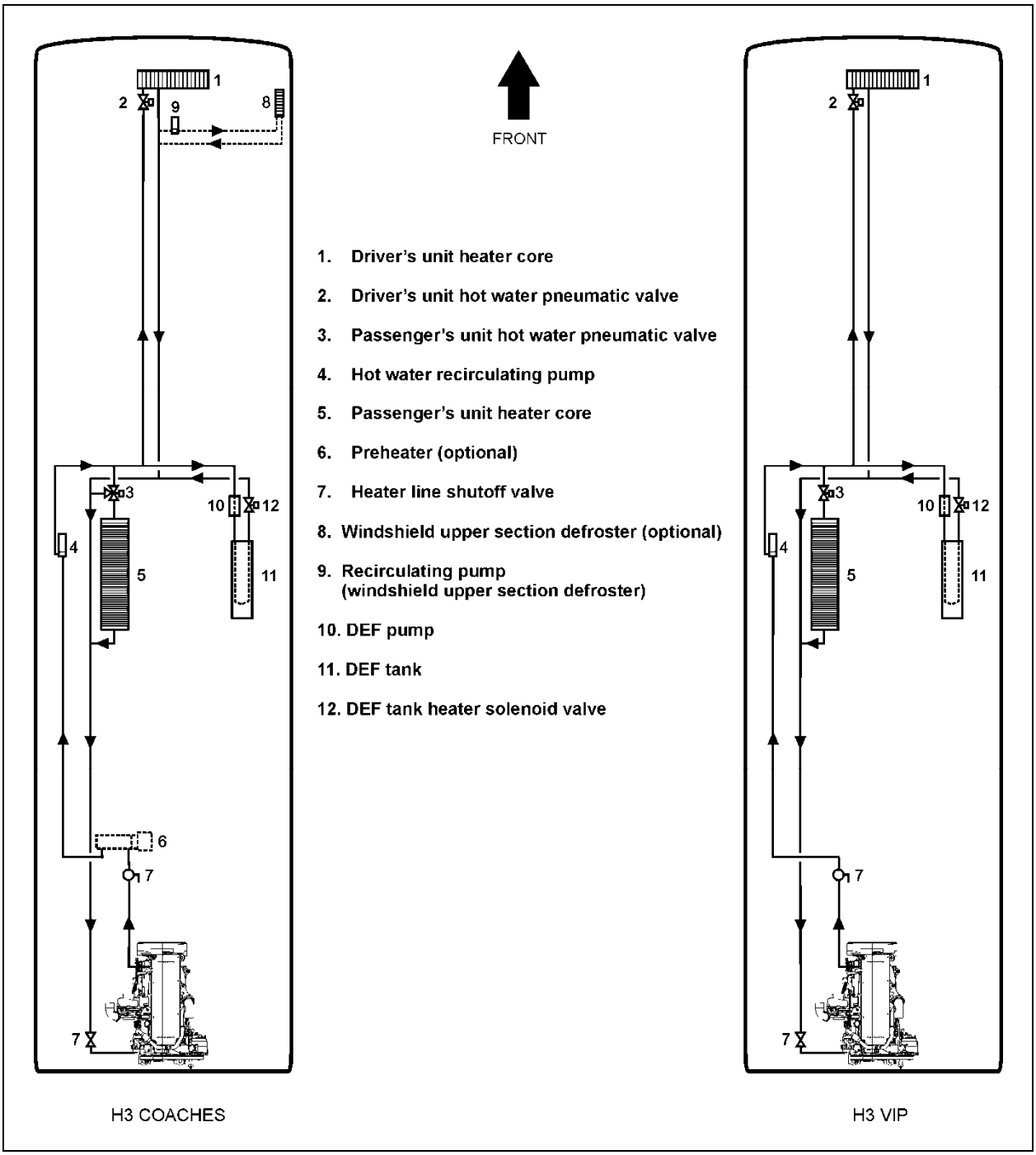

FIGURE 3: H3 SERIES CENTRAL HVAC SYSTEM – HEATING CIRCUIT 22262

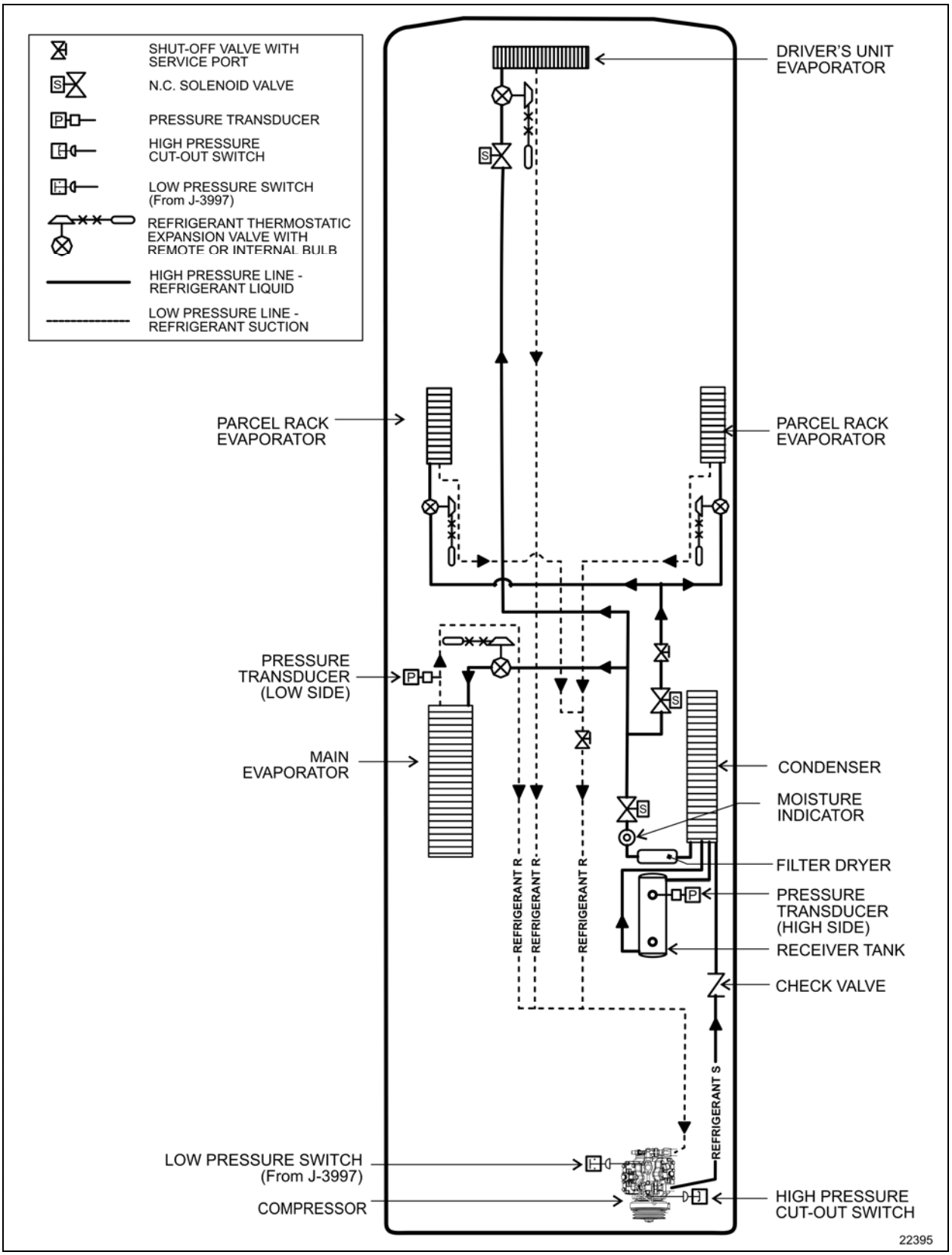

FIGURE 4: H3 SERIES CENTRAL SYSTEM – REFRIGERANT CIRCUIT WITH OVERHEAD COMPARTMENT EVAPORATOR

2.3 CENTRAL HVAC SYSTEM – X SERIES

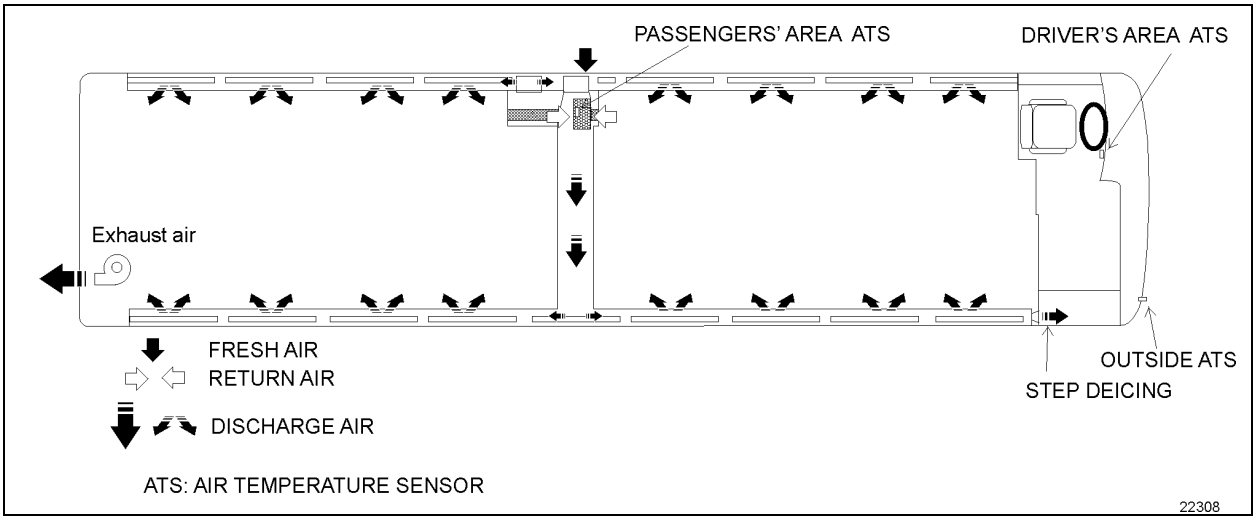

FIGURE 5: X3 COACHES CENTRAL HVAC SYSTEM - PASSENGER'S UNIT AIR CIRCULATION

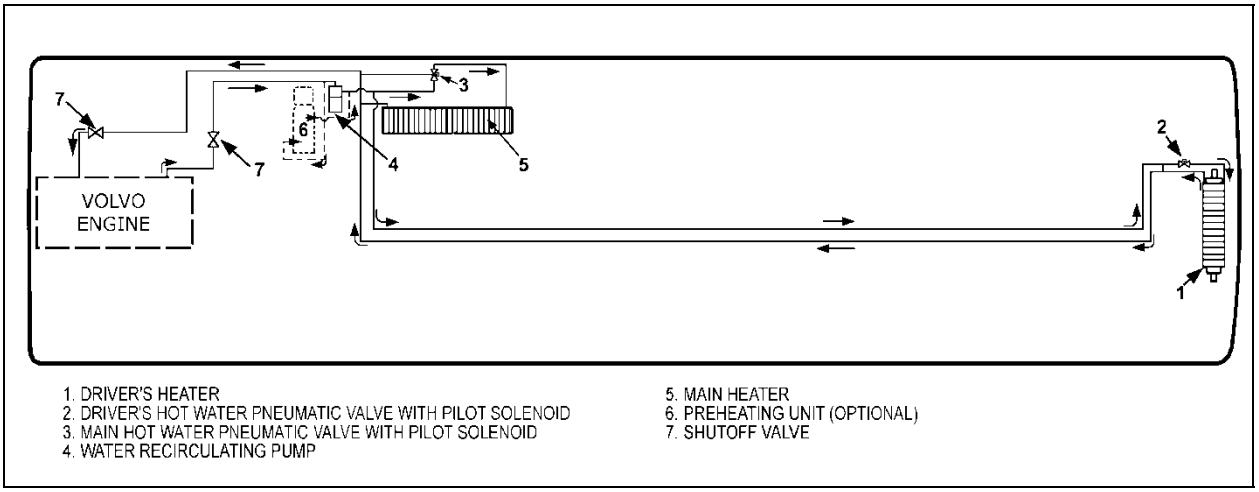

FIGURE 6: X3 SERIES CENTRAL HVAC SYSTEM – HEATING CIRCUIT

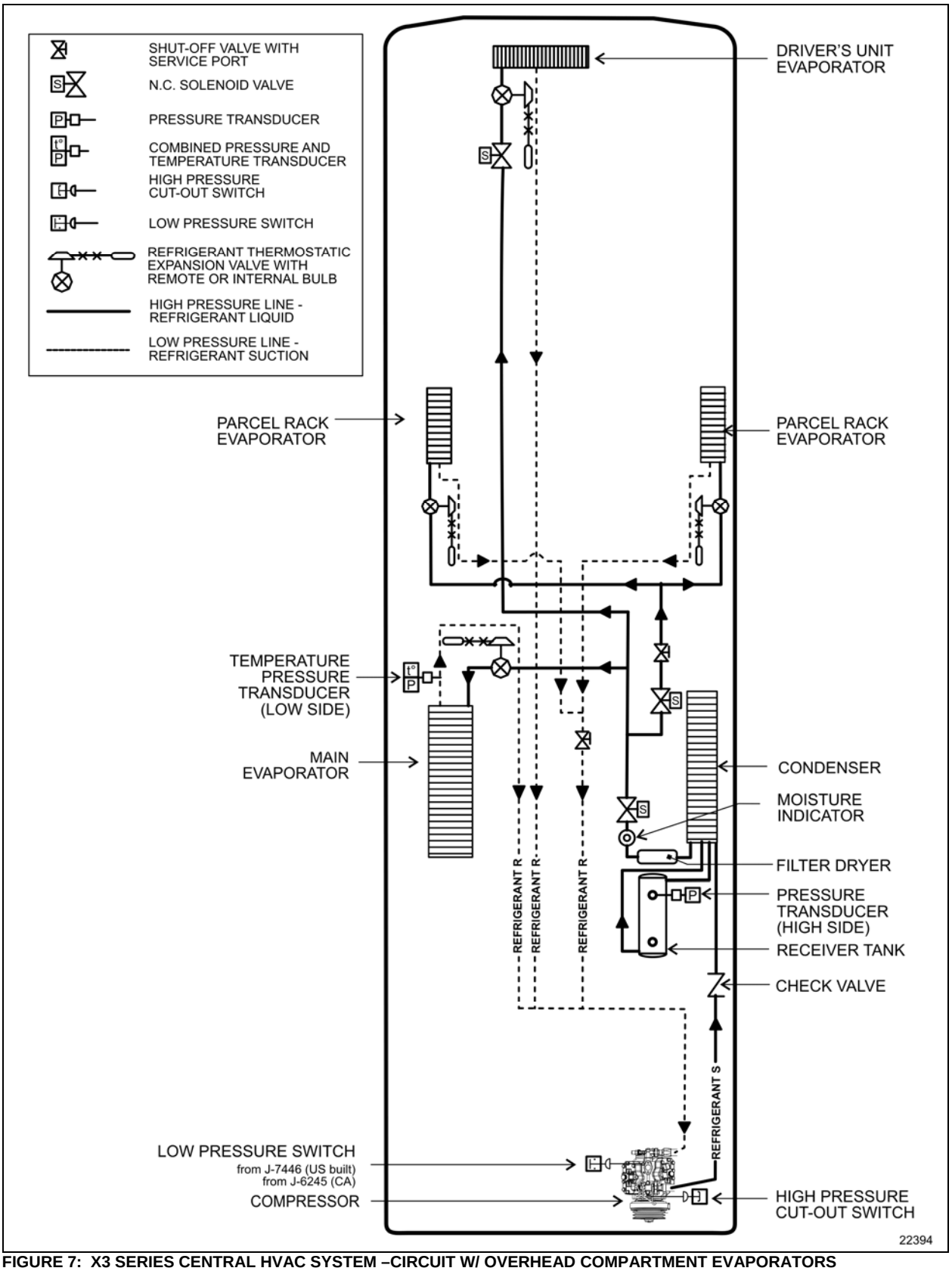

FIGURE 7: X3 SERIES CENTRAL HVAC SYSTEM –CIRCUIT W/ OVERHEAD COMPARTMENT EVAPORATORS

2.4 SMALL HVAC SYSTEM – H SERIES

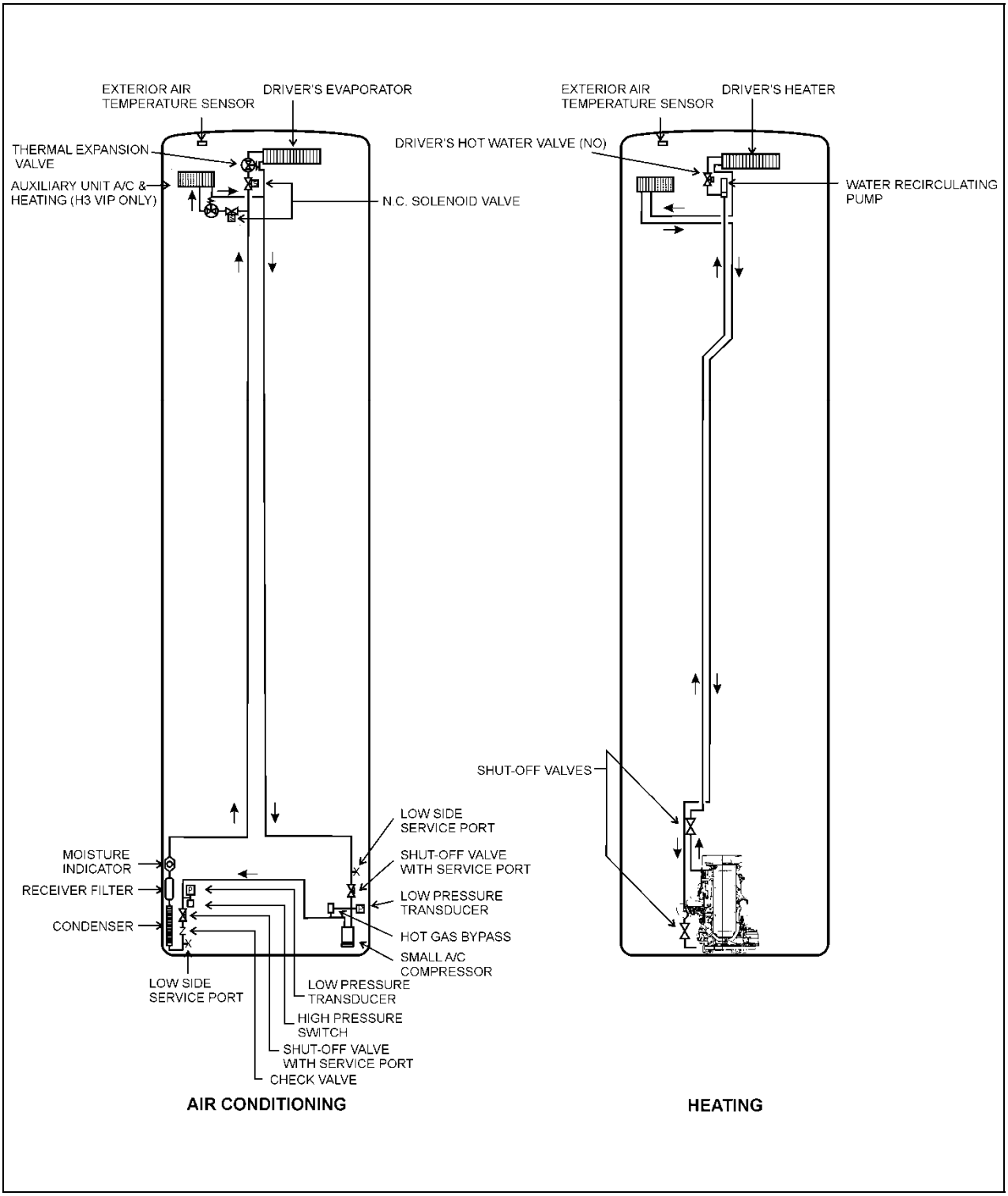

FIGURE 8: H SERIES SMALL HVAC SYSTEM – HEATING AND AIR CONDITIONING 22345

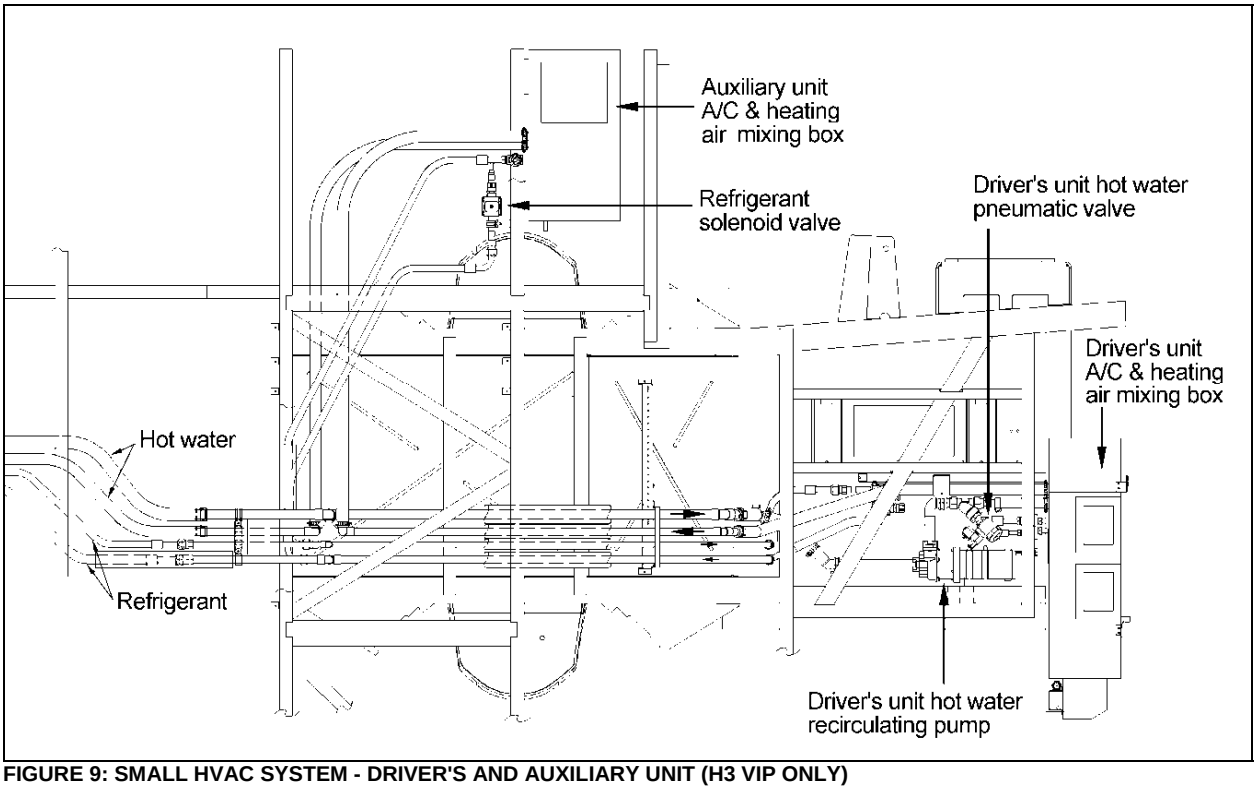

FIGURE 9: SMALL HVAC SYSTEM - DRIVER'S AND AUXILIARY UNIT (H3 VIP ONLY)

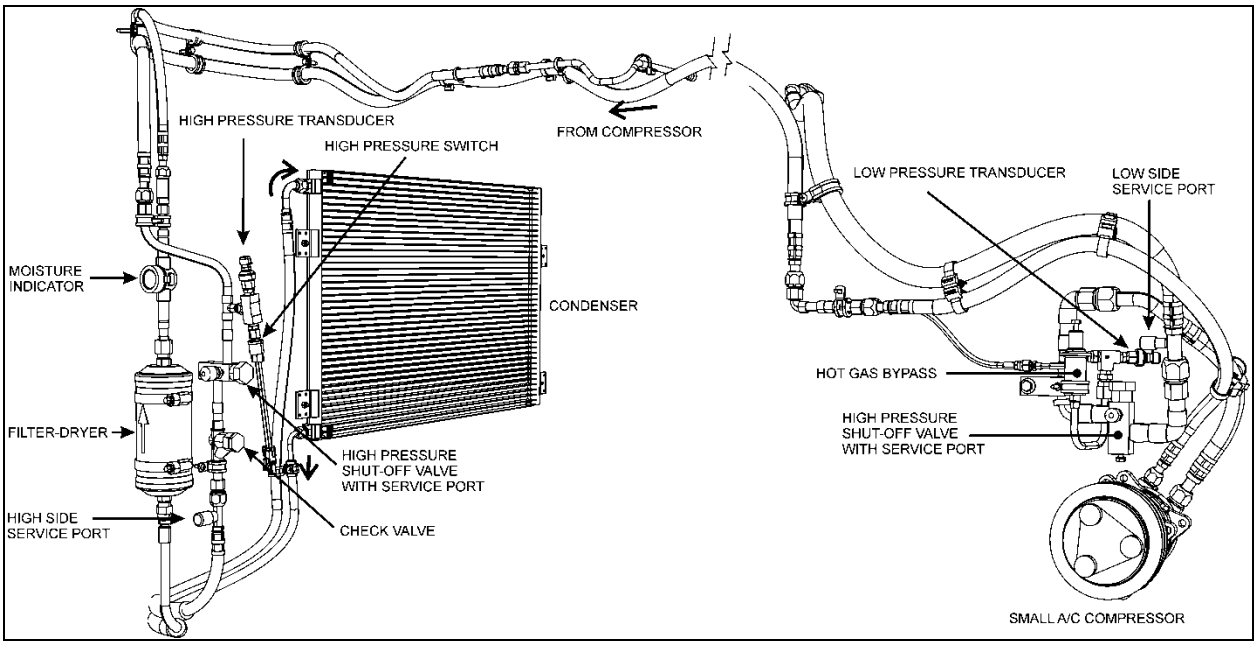

FIGURE 10: H SERIES SMALL HVAC SYSTEM – AIR CONDITIONING 22377

2.5 SMALL HVAC SYSTEM – X SERIES

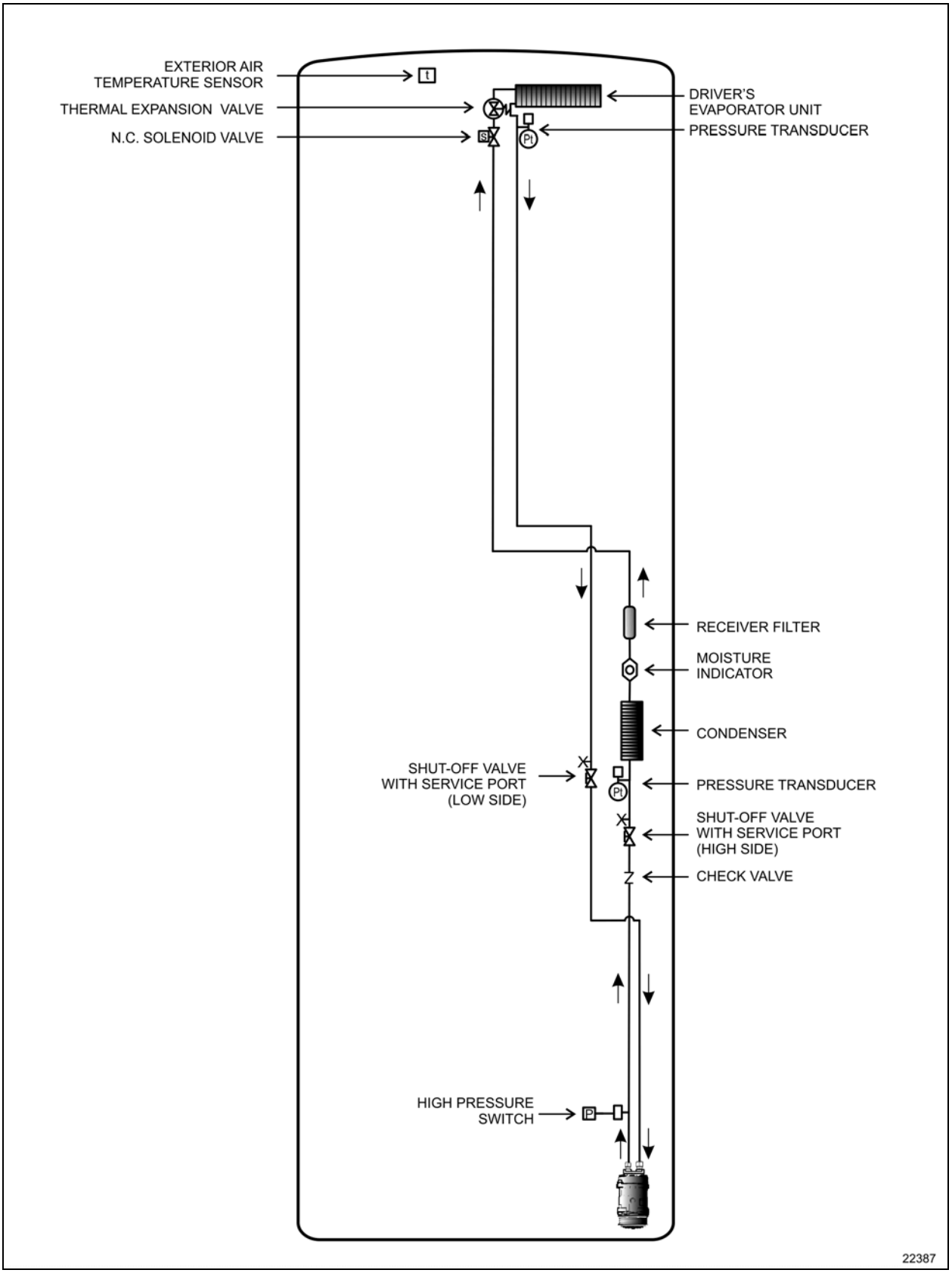

FIGURE 11: X3 SERIES SMALL HVAC SYSTEM - REFRIGERANT CIRCUIT

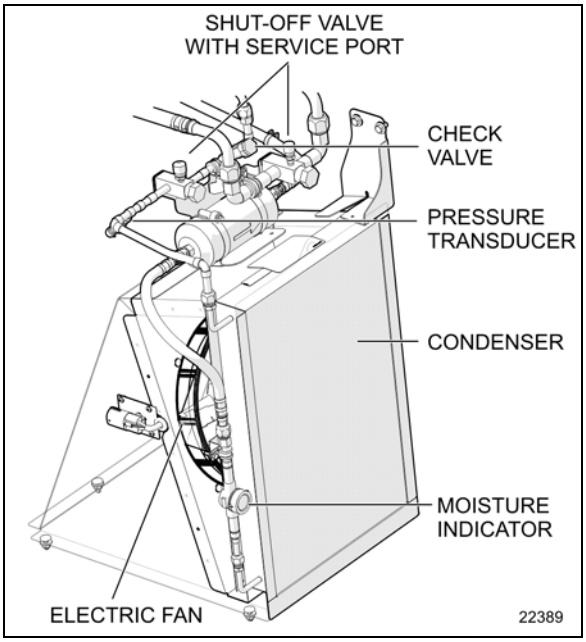

FIGURE 12: X-SERIES CONDENSER ARRANGEMENT

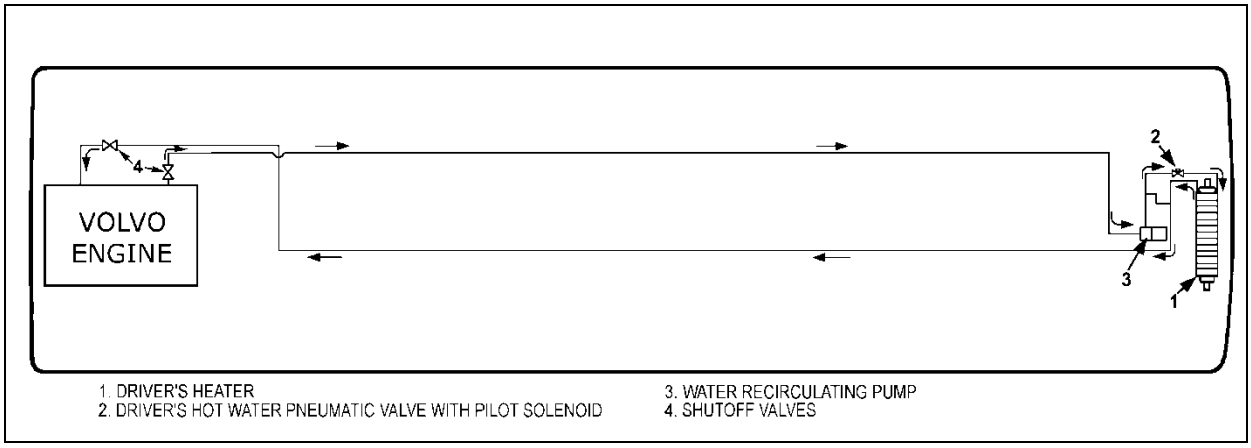

FIGURE 13: X-SERIES SMALL HVAC SYSTEM - HEATING CIRCUIT

3. HVAC SYSTEM BASIC MAINTENANCE

Basic maintenance required on the passenger's and driver's units consists in cleaning their respective coils and cleaning or replacing air filters.

However, periodic inspection for broken drains, hoses and charging of system should be done.

MAINTENANCE

Squeeze rubber discharge tubes located underneath the appropriate compartment to eliminate the accumulated water and dirt every three months.

3.1 COIL CLEANING

Check the external surface of the coils at regular intervals for dirt or any foreign matter.

3.1.1 Driver's Unit

MAINTENANCE

Once a year, gain access to the driver's unit, remove the coil access panel (Figure 14) and clean the **driver's** unit evaporator and heater coils with low pressure air jet, taking care not to damage fins. Clean the bottom of the defrost plenum.

For the optional windshield upper section defogger/defroster, remove the bottom access panel, remove the six bolts fixing the blower motor assembly. Use low air pressure to clean the coil.

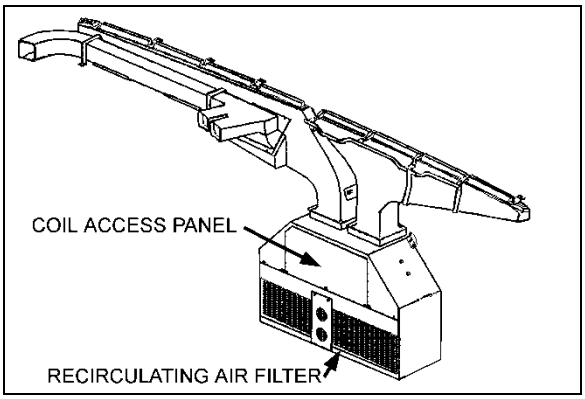

FIGURE 14: DRIVER'S UNIT AIR FILTERS 22171

3.1.2 Passenger's Unit

MAINTENANCE

With the air filters previously removed, clean the **passenger's** unit evaporator and heater coils with low air pressure or a stream low-pressure water **once a year**. Do not use a pressure washer as this will damage the fins. Remove the air filter and brush the evaporator coil from behind.

Once a year, clean the condenser with low-pressure air jet or a stream of low-pressure water, taking care not to damage fins (Figure 16).

CAUTION

Direct the pressure straight through the coil to prevent bending of fins and do not use extremely high pressure. Do not use hot water, steam or caustic soap.

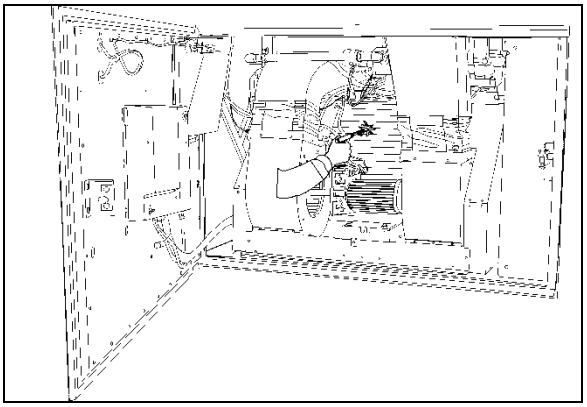

FIGURE 15: EVAPORATOR COIL CLEANING WITH LOW-PRESSURE AIR JET 22373

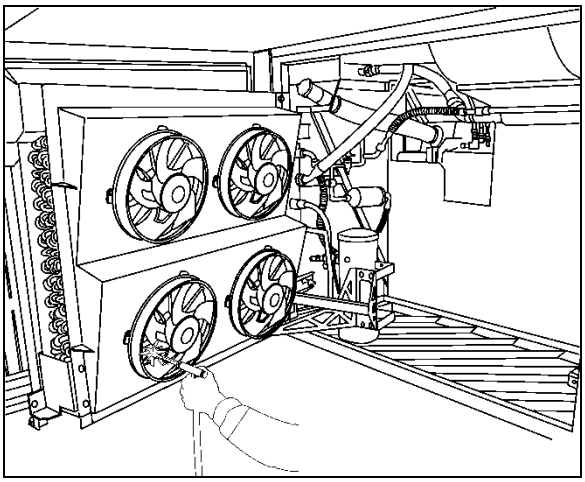

FIGURE 16: CLEANING PASSENGER'S UNIT CONDENSER COIL WITH LOW-PRESSURE AIR JET 22362

3.2 DRIVER'S UNIT AIR FILTER

The driver's unit is located behind the R.H. console panel. To gain access to the air filter, unscrew the R.H. console's grill located in the entrance stepwell. Remove the plastic cover and slide out the recirculating air filter (**FIGURE 18**).

The driver's HVAC unit is located behind the dashboard's R.H. side panel. To gain access to the A/C filters, unscrew the grille located at the top entrance step (Figure 17). Unscrew the plastic cover and slide out the recirculating air filter (**FIGURE 18**). Doing so will give you access to the fresh air filter (see item 18, Figure 71).

MAINTENANCE

Driver's unit return air filter

Clean or replace return air filter at the intervals specified by the Lubrication And Servicing Schedule in Section 24: LUBRICATION & SERVICING.

To clean filter, back flush with water or soapy water, then dry with air.

NOTE

If the windshield is continuously fogged, check that :

The driver's unit fresh air filter is not clogged;

The fresh air damper (flapper door) is open, i.e. the recirculation button on the HVAC control unit is not engaged.

On H3 series vehicles, a fresh air intake filter is located behind the R.H. side headlights assembly. Clean the steel wire screen as required.

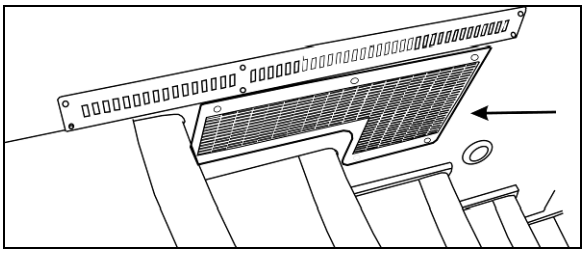

FIGURE 17: R.H CONSOLE AIR FILTER ACCESS GRILL (COACHES) 18505

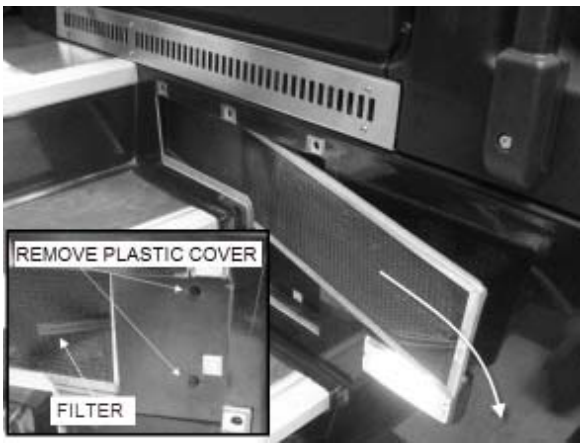

FIGURE 18: REMOVING DRIVER'S SECTION AIR FILTERS

3.3 PASSENGER'S UNIT AIR FILTER – H3 SERIES

The passenger's unit 2-part air filter is located in the evaporator compartment. To access the filter, locate the access panel in the baggage compartment at the left of the evaporator compartment. Open panels by turning the three screws of either panel ¼ of a turn (Figure 20), unsnap both fasteners on top of filter, and slide out filter (Figure 21).

MAINTENANCE

Passenger's unit air filter

Clean or replace filter at the intervals specified by the Lubrication And Servicing Schedule in Section 24: LUBRICATION & SERVICING.

To clean filter, back flush with water or soapy water, then dry with air.

CAUTION

Be sure not to reverse filter upon installation.

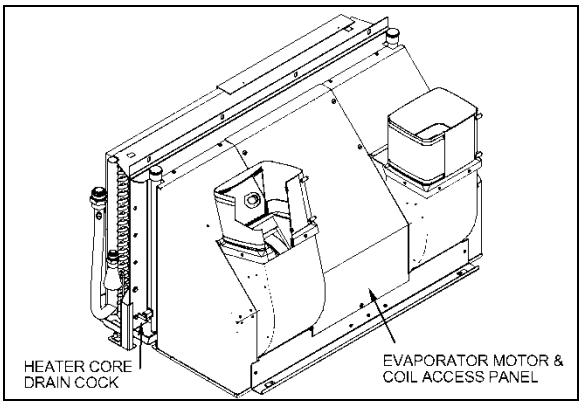

FIGURE 19: PASSENGER'S UNIT EVAPORATOR COIL
22332

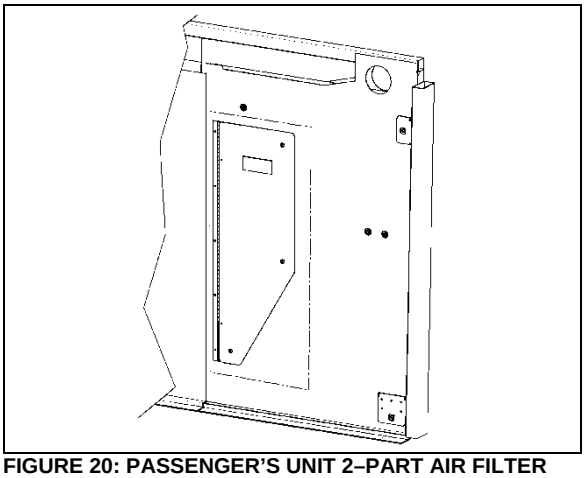

FIGURE 20: PASSENGER'S UNIT 2–PART AIR FILTER ACCESS PANEL H-SERIES

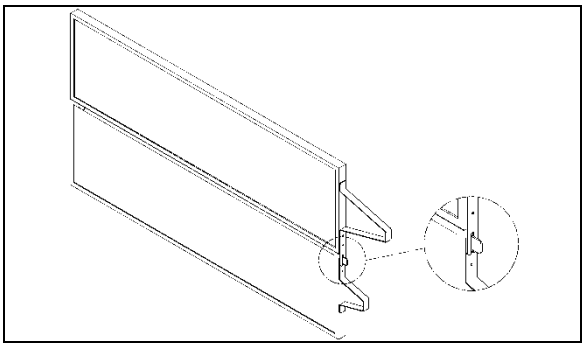

FIGURE 21: PASSENGER'S UNIT 2-PART AIR FILTER H SERIES

3.4 PASSENGER'S UNIT AIR FILTER – X3 SERIES

The cabin or passengers' section air filter is located in the evaporator compartment above the evaporator coil and fans (Figure 22).

MAINTENANCE

Passenger's unit air filter

Clean or replace filter at the intervals specified by the Lubrication And Servicing Schedule in Section 24: LUBRICATION & SERVICING.

To clean filter, back flush with water or soapy water, then dry with air

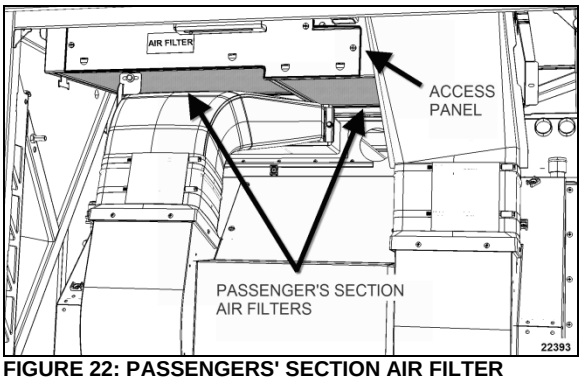

FIGURE 22: PASSENGERS' SECTION AIR FILTER

CAUTION

Be sure not to reverse filter upon installation.

3.5 OVERHEAD COMPARTMENT FAN AIR FILTER

Air conditioning evaporator coils may be installed in both overhead compartment air systems. Only the air filters are serviceable. The air filters are accessible from inside the overhead compartments (Figure 23).

MAINTENANCE

At the intervals specified by the Lubrication And Servicing Schedule in Section 24: LUBRICATION & SERVICING, slide out the filters, then back flush with water, dry with air and reinstall.

For air conditioning unit, ball valves are added on supply and return lines in the condenser compartment. They have service port to evacuate the A/C overhead compartment circuit. When work has to be done on an evaporator coil unit, it will be easier to remove it and repair it on a bench.

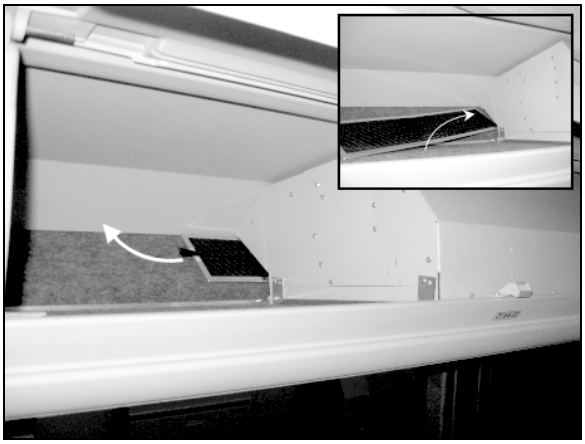

FIGURE 23: OVERHEAD COMPARTMENT FAN AIR FILTER 22201

3.6 COMPRESSOR BELTS

3.6.1 Belt Replacement – Central System

DANGER

Set the main battery disconnect switch to the OFF position. For greater safety, set the engine rear starter selector switch in engine compartment to the OFF position.

1. Open engine compartment rear door and locate A/C compressor drive belt tensioner. Loosen tensioner screw to release belt tension.
2. For vehicles equipped with a 3rd alternator, belt tensioning is also applied through air bellows (Figure 25). Turn the belt tensioner two-way control valve counterclockwise to release bellows pressure (Figure 27).
3. Remove the radiator fan drive belt (refer to Section 05 COOLING).
4. Slip the old compressor belts off and the new ones on.

NOTE

Both belts must always be replaced simultaneously to ensure an equal distribution of load on each of them.

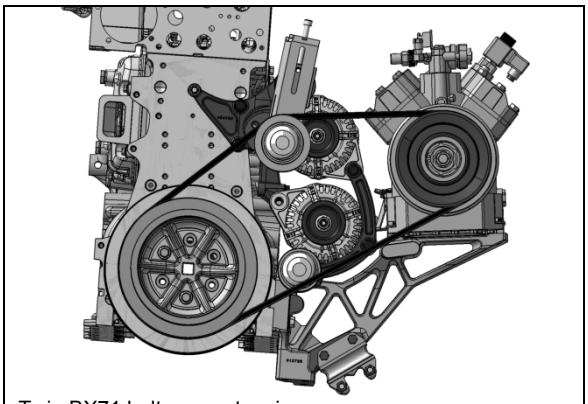

Twin BX71 belt proper tension
New: 90-100 lbs
Used: 75-85 lbs
Belt tension Tool:7770002

FIGURE 24: STANDARD BELT LAYOUT WITH CENTRAL HVAC SYSTEM

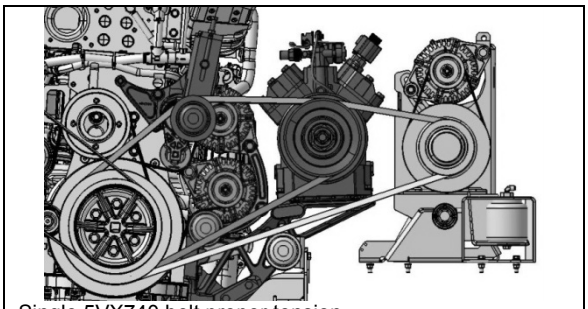

Single 5VX740 belt proper tension
New: 150-160 lbs
Used: 120-130 lbs
Belt tension Tool:7770002
Single 5VX940 belt to 3rd alternator proper tension
Automatic with pneumatic bellows

FIGURE 25: H SERIES BELT LAYOUT W/ 3RD ALT.

NOTE

Belts specifications may vary. For proper belt selection, always consult your vehicle Coach Final Record.

MAINTENANCE

A/C compressor drive belt

Clean belt tension, inspect for cracks or frayed material at the intervals specified by the Lubrication And Servicing Schedule in Section 24: LUBRICATION & SERVICING.

3.6.2 Belt Tension Adjustment – Central System

On the mechanical tensioner (Figure 26), slightly slack lock bolt (A). Adjust tension by turning

adjustment screw (B). Tighten the lock bolt (A) to preserve adjustment.

TORQUE: 43 lb-ft (58 Nm)

Should the idler bearing need to be serviced, tighten shoulder bolt (C) at reassembly.

TORQUE: 31.5-38.5 lb-ft (43-52 Nm)
(M12 shoulder bolt)

TORQUE: 59 lb-ft (80 Nm)
(M12 x 1.75 std bolt)

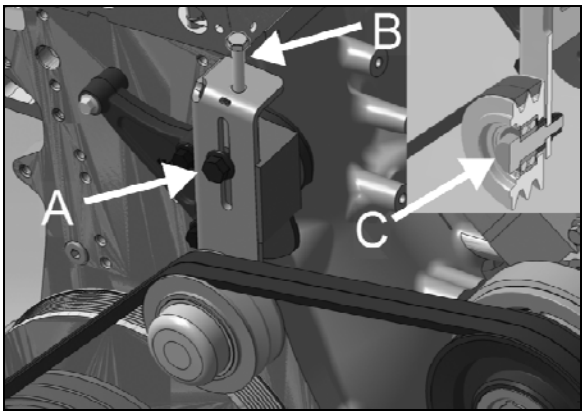

22381

FIGURE 26: TENSIONER ON CENTRAL A/C

For H Series vehicles equipped with a 3rd alternator, (Figure 25) belt tensioning is also applied through air bellows which is adjusted by an air pressure regulating valve pressure (Figure 27). The correct pressure of 45 psi is set at the factory. Periodically verify the pressure at the regulating valve using a pressure gauge and correct if required.

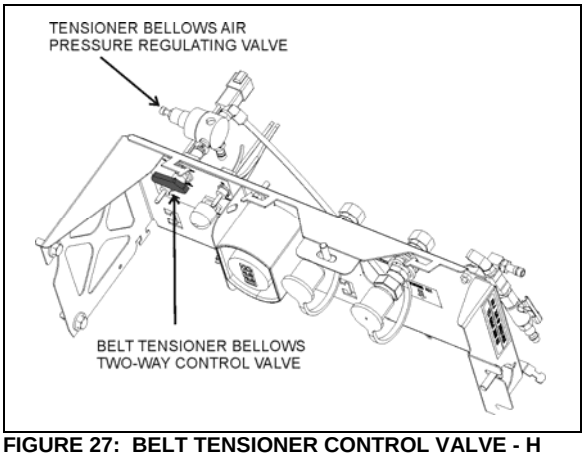

FIGURE 27: BELT TENSIONER CONTROL VALVE - H SERIES 12219

3.6.3 Belt Tension Adjustment – Small HVAC System H-SERIES

Belt tensioning is applied through air bellows which are adjusted by an air pressure regulating valve (Figure 27). The correct pressure of 45 psi.is set at the factory. Periodically verify the pressure at the regulating valve using a pressure gauge and correct if necessary.

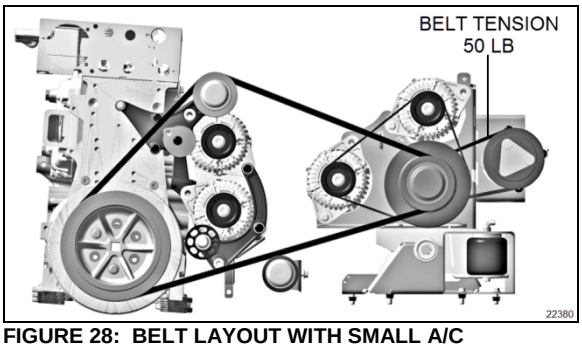

FIGURE 28: BELT LAYOUT WITH SMALL A/C COMPRESSOR H-SERIES

3.6.4 Belt Tension - Small HVAC System X-SERIES

Belt tension is achieved by an automatic belt tensioner. No adjustment is required.

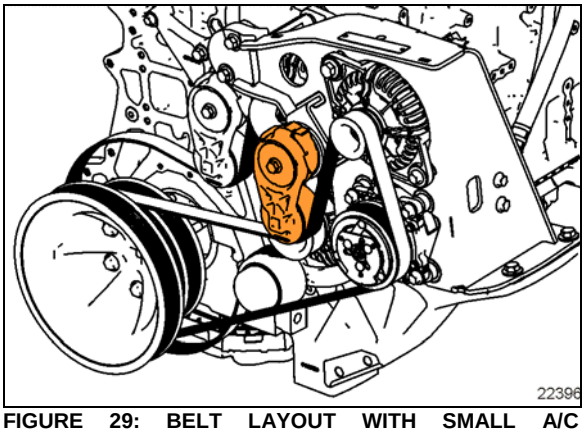

FIGURE 29: BELT LAYOUT WITH SMALL A/C COMPRESSOR X-SERIES

3.7 TORCH BRAZING

Use electrode containing 35% silver.

NOTE

A 3.5% silver low temperature brazing electrode can be used on low side pressure and liquid high side.

CAUTION

When using heat near a valve, wrap with water saturated rag to prevent overheating of vital parts.

DANGER

Before welding any part of refrigeration system, make sure the area is well ventilated.

3.8 SOLDERING

Before soldering any part of the system, make sure the area is well ventilated. Use (stay clean) flux sparingly and apply solder (95-5 round wire 1/8 inch [3,1 mm]). After completing repairs, test for leaks.

When using heat at or near a valve, wrap with a rag saturated of water to prevent overheating of vital parts.

4. HVAC SYSTEM COMPONENTS

4.1 COMPRESSOR – CENTRAL A/C SYSTEM

The central system is equipped with a **Bitzer 4-cylinder model 4NFCY** compressor. Refer to paragraph 9 “Specifications” at the end of this section.

4.1.1 Suction and Discharge Hose Connection

1. Before connecting suction and discharge refrigerant hoses to the compressor, apply POE compressor oil on new gaskets, **do not dip in oil**.
2. Tighten hose flange by hand in 2 sequences.
3. Apply a final torque on cap screws.

TORQUE: 31-35 lb-ft (42-47 Nm)

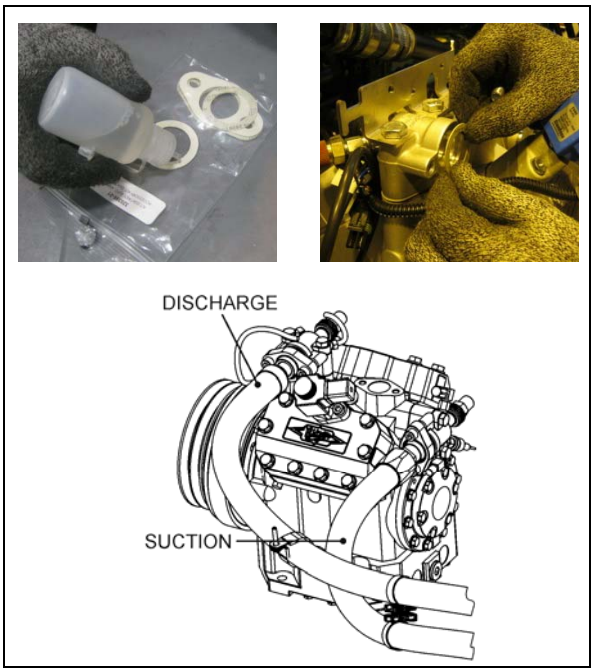

FIGURE 30: SUCTION AND DISCHARGE HOSE

4.1.2 Compressor Maintenance

For complete information on Bitzer A/C compressor maintenance, installation, torque chart, approved oils, refer to the following Bitzer manuals included with the technical publications in PDF format.

- Bitzer kb-540-3 Operating Instructions
- Bitzer ke-540-7 Spare Parts List
- Bitzer kw-541-2 Exchanging Shaft Seal
- Bitzer kt-510-5 Tech Info oils
- Bitzer kw-555-3 Tightening Torques
- Bitzer kt-100-3 Capacity Control (unloader)
- Bitzer kw-540-1 Maintenance Instruction

4.1.3 Oil Level Check and Oil Change

Oil level should be between ¼ and ¾ of sight glass height.

Oil Type: Polyolester ISO68.

- Bitzer BSE55 (POE)
- Castrol Icematic SW 68
- Mobil EAL Arctic 68
- Shell S4 FR-F 68, Clavus R68

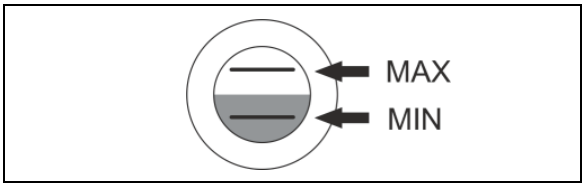

MAINTENANCE

A/C compressor oil

Check compressor oil level at the intervals specified by the Lubrication And Servicing Schedule in Section 24: LUBRICATION & SERVICING.

MAINTENANCE

The shaft seal oil tube collects oil seeping through the felt shaft seal. Empty the shaft seal oil collecting tube at the intervals specified by the Lubrication And Servicing Schedule in Section 24: LUBRICATION & SERVICING.

During the 250 hour run-in period of the shaft seal, an increased oil leak rate may occur.

Impurities from the system components or operation outside the application ranges can lead to deposits in the lubrication oil and darken its color. Change the oil in this case. At the same time, clean the oil filter and magnetic plug as well. Determine and eliminate the cause for operation outside the application ranges.

MAINTENANCE

Compressor oil

Change the oil, clean the oil filter and the magnetic plug at the intervals specified by the Lubrication And Servicing Schedule in Section 24: LUBRICATION & SERVICING.

FIGURE 31: SHAFT SEAL OIL COLLECTING TUBE

4.1.4 Troubleshooting Guide

A preliminary check may be made by simply feeling the cylinder heads with the unit in operation at ambient temperatures of 35°F (2°C) and over. The cylinder heads are internally divided into suction and discharge areas. The upper central section of the cylinder is the suction side and it should be relatively cool to the touch, as opposed to the hot discharge area which is the lower perimeter area of the cylinder head. If a valve plate or head gasket is blown, or a compressor unloader is stuck open, partially compressed refrigerant vapor will be circulated between the suction and discharge sides of the head. The affected cylinder head will then have a relatively even temperature across its surface and be neither as hot as the normal discharge temperature nor as cool as the normal suction temperature.

Blown Head Gaskets

Symptom:

- Loss of unit capacity at low temperature.
- Even cylinder head temperature.

Cause:

- Improperly torqued cylinder head bolts.
- Improperly positioned gasket at assembly.
- Warped cylinder head.
- Severe liquid refrigerant floodback.

Blown Valve Plate Gaskets

Symptom:

- Loss of unit capacity at medium and low temperatures.
- Very hot cylinder head surface.
- Higher than normal suction pressure.

Cause:

- Improperly torqued cylinder head bolts.
- Severe liquid refrigerant floodback.
- Oil slugging caused by an overcharge of oil or flood starts.
- Discharge valves not seated properly (liquid drainback during shutdown).

Broken Suction Valves

Symptom:

- Loss of unit capacity at all temperatures.

- Compressor unable to pull extremely low vacuum with suction service valve frontseated.

Cause:

- Repeated liquid refrigerant floodback.
- Flooded starts.
- Overcharge of oil.
- Discharge valves not seated properly (liquid drainback during shutdown).
- Expansion valve not controlling properly.

Unloader Valve Stuck Open

Symptom:

- Loss of unit capacity at all temperatures.
- Higher than normal suction pressure.
- Even cylinder head temperature.

Cause:

- Unloader body stem bent.
- Foreign material binding unloader piston or plunger.

4.1.5 Electro-Magnetic Clutch

Refer to ***Lang Electromagnetic clutch mounting-dismounting*** and ***Bitzer Maintenance Instruction kw-540-1*** provided with the technical publications in PDF format for further details on electro-magnetic clutch removal and installation.

4.2 COMPRESSOR – SMALL HVAC SYSTEM

Consult Ice Compressor Service Manual, found on your Technical Publications USB flash drive.

WARNING

Read the cautionary information in the small Compressor Service Manual included at the end of this section.

4.2.1 Removal - When the Compressor Is Operational

Perform the “OIL RETURN OPERATION” (Refer to paragraph 7.9).

NOTE

Belts specifications may vary. For proper belt selection, always consult your vehicle Coach Final Record.

4.2.2 Removal - When the Compressor Is Inoperable

- Perform the “Refrigerant Recovery” operation (paragraph7.5).
- Remove any tension on the belts

Slacken bolts fixing small compressor. (FIGURE 32 and Figure 33)

- Remove the compressor.
- Reinstall following system clean-out recommendations (Paragraph 7.6)

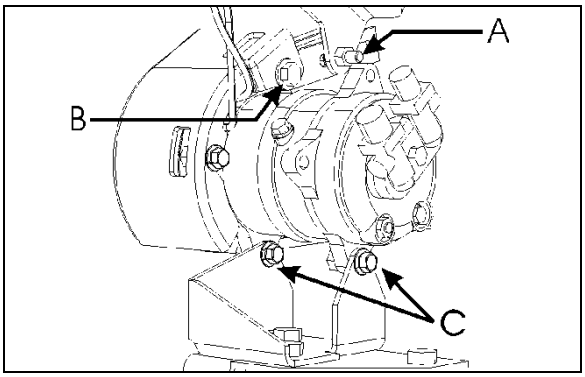

FIGURE 32: COMPRESSOR MOUNTING H-SERIES

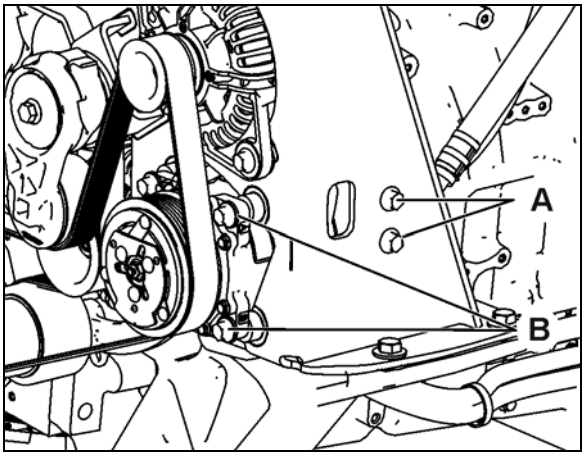

FIGURE 33: COMPRESSOR MOUNTING X-SERIES

4.3 BRUSHLESS EVAPORATOR MOTOR

The brushless evaporator motor is installed in the evaporator compartment (Figure 34). It is a 27.5 volt, 2HP (1,5 kW) motor which activates a double blower fan unit.

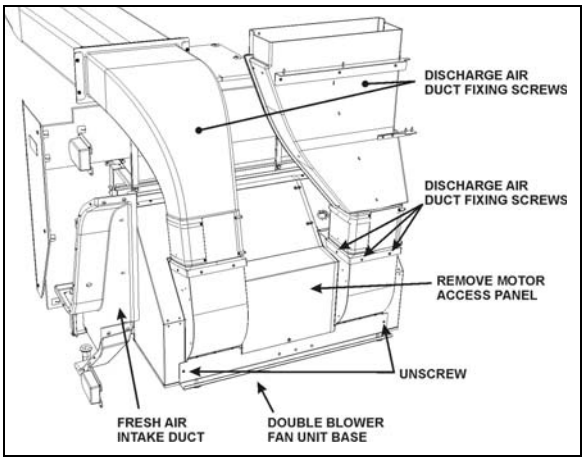

FIGURE 34: H3 SERIES EVAPORATOR COMPARTMENT

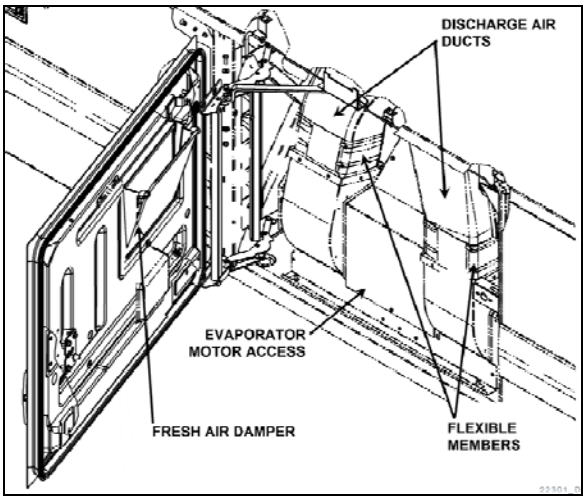

FIGURE 35: X3 SERIES EVAPORATOR COMPARTMENT

4.3.1 Removal

1. Set the battery master switch to the OFF position and trip circuit breaker CB3 (CB6 on X3 VIP).
2. Open the evaporator compartment door.
3. On the HVAC module. Disconnect circuit 90H1 from evaporator relay R12.
4. Identify the discharge ducts inside compartment and remove the Phillips head screws fixing the air duct to blower fan unit.
5. Remove the motor access panel.
6. Disconnect electrical motor speed control wire (white wire, circuit 2F), power cable and ground cable from motor terminals.
7. From under the vehicle, remove the eight bolts fixing the double blower fan unit base. Remove the complete unit from the evaporator compartment (Figure 36).

CAUTION

Never support evaporator motor assembly by its output shafts while moving it. Always use double blower fan unit base.

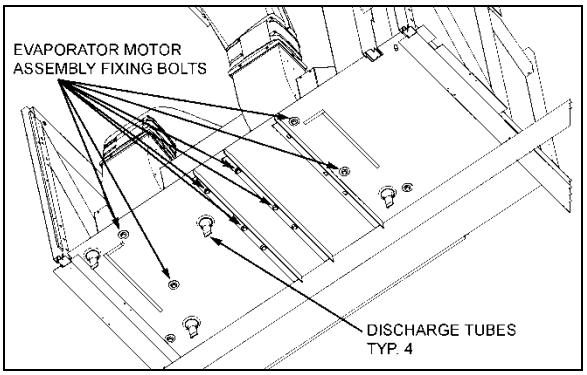

FIGURE 36: EVAPORATOR MOTOR BOLTS 22315

8. Install the complete unit on a work bench, unfasten the fan square head set screws, the Phillips head screws retaining cages to base and slide out the assemblies from the evaporator motor output shaft.
9. Remove motor from double blower fan unit base.

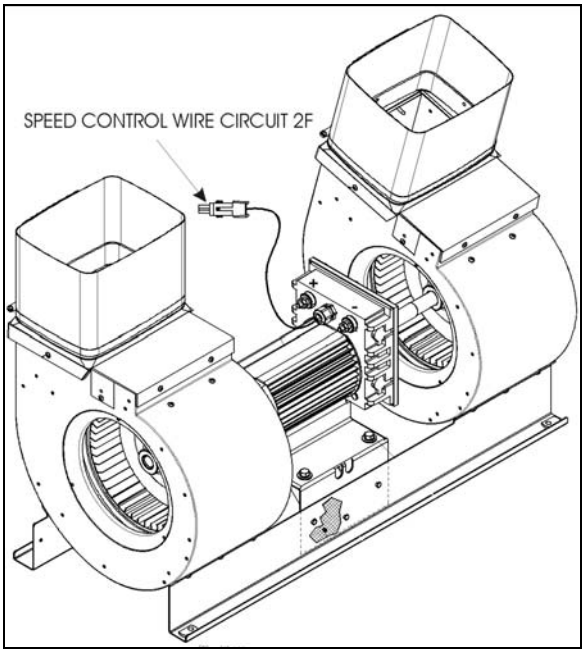

FIGURE 37: EVAPORATOR MOTOR ASSEMBLY

4.3.2 Installation

To reinstall the evaporator motor, reverse "Evaporator Motor Removal" procedure.

4.4 CONDENSER (CENTRAL A/C)

The central A/C system condenser coil is hinge mounted on the R.H. side of the vehicle on the condenser compartment door. Since condenser's purpose is to dissipate heat from the hot refrigerant, it is important to keep the cooling coils and fins clean. A clogged coil will cause high discharge pressure and insufficient cooling.

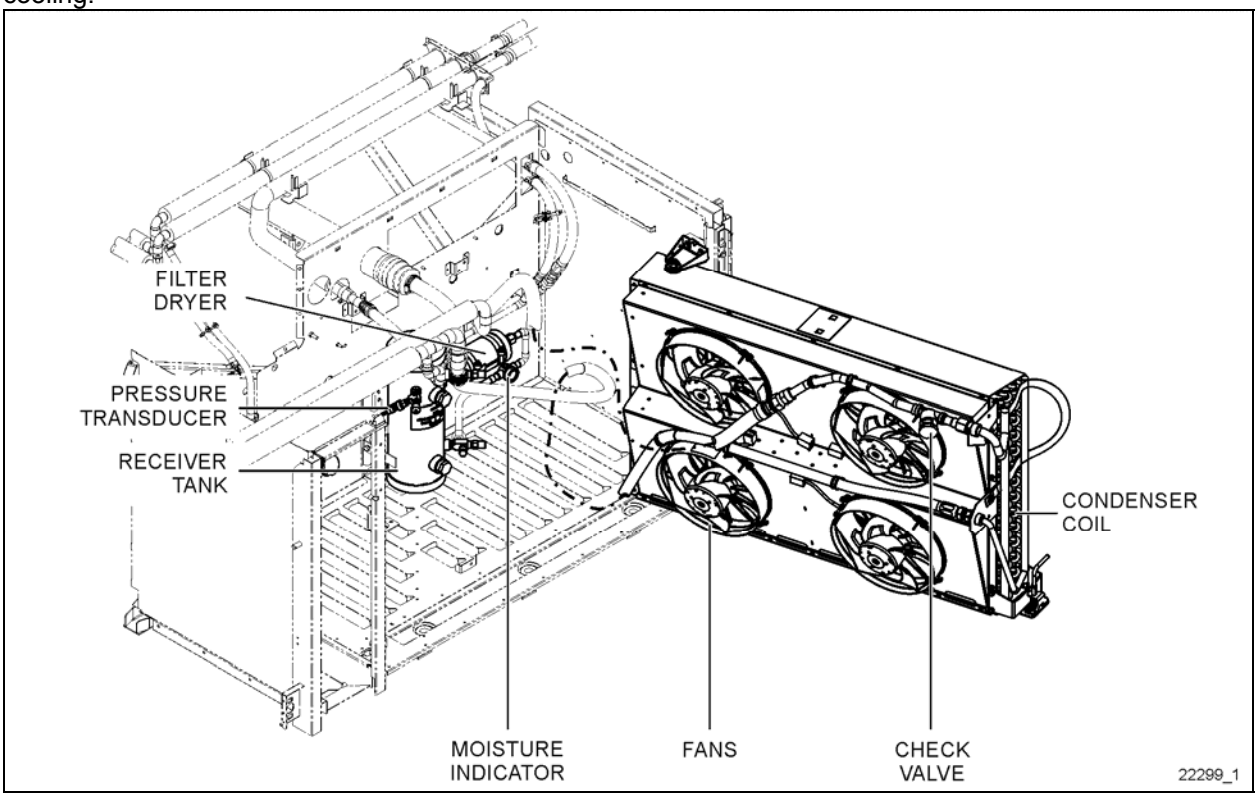

FIGURE 38: CENTRAL A/C CONDENSER

4.4.1 Condenser Fan Control

Four brushless motors fan are installed in condenser compartment on R.H. side of vehicle in order to ventilate the condenser coil. The fans pull outside air through the condenser coil and discharge it through an opening at bottom of compartment.

Fan speed is controlled by the multiplex program and varies according to high side pressure. A Pulse Width Modulation (PWM) signal is used to control fan speed.

You will notice fan speed ramp up to full speed between 100 psi and 200 psi, and a ramp down from 200 psi to 100 psi. Below 100psi, the fans are not running. Refer to Figure 39 below.

NOTE
During normal conditions, fan function according to the following specifications: Full speed: 6200cfm, 37A at 28 VDC Fan motor speed: 2950 rpm at full speed

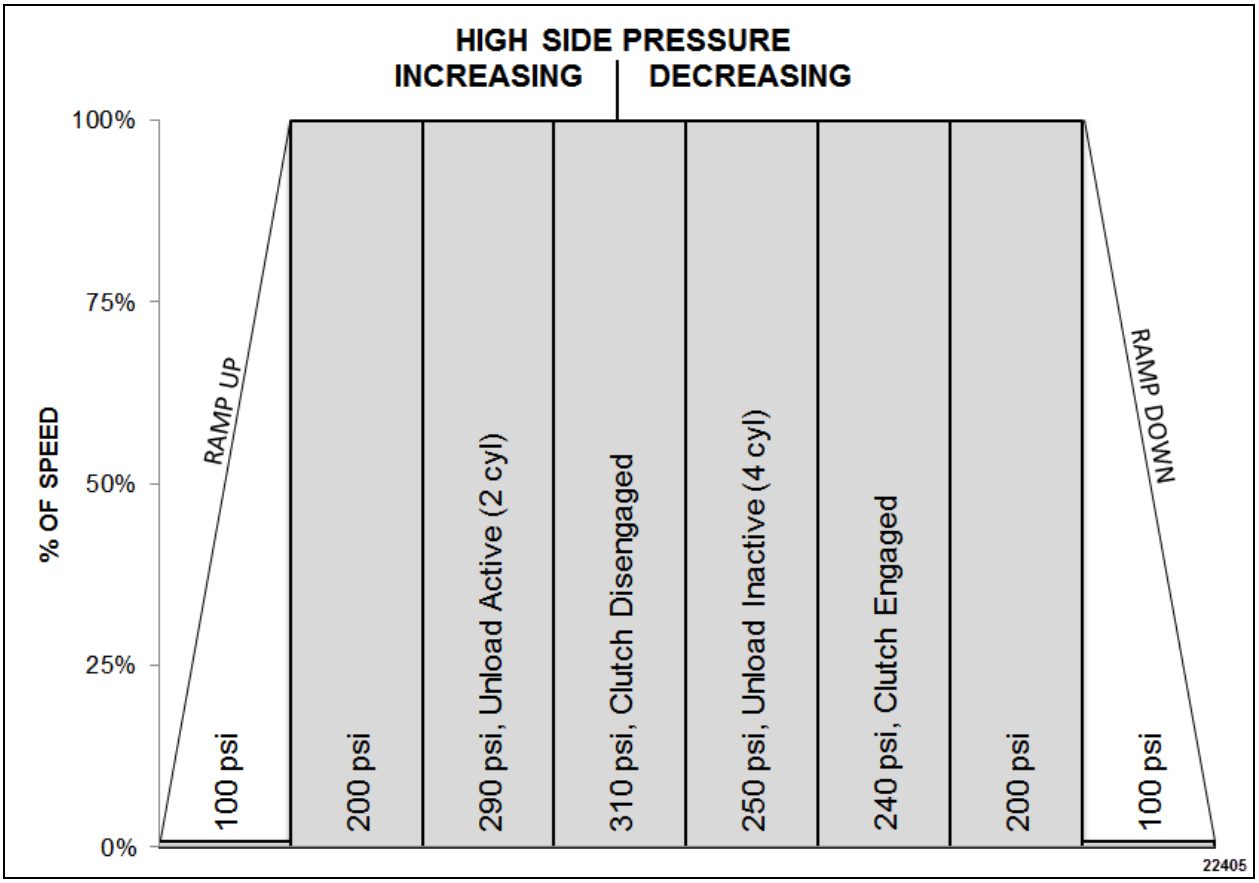

FIGURE 39: CONDENSER FAN SPEED AND COMPRESSOR EVENTS IN RELATION WITH HIGH SIDE PRESSURE

4.4.2 Condenser Fan Removal

1. Set the battery master switch to the OFF position.
2. Unplug the fan harness connector (Figure 40).
3. Remove the four hexagonal head cap screws retaining the fan assembly to the shroud.
4. Remove the motor.

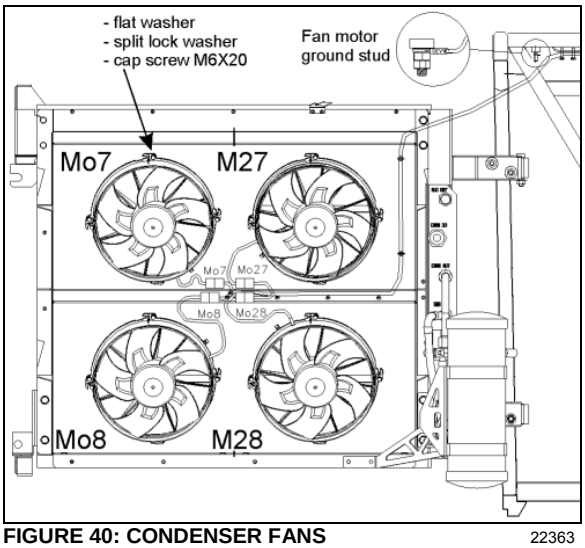

FIGURE 40: CONDENSER FANS 22363

4.5 CONDENSER (SMALL A/C)

On H3-series vehicles, the condenser is installed over the radiator and benefits from the existing airflow in this location.

On X3-series vehicles the condenser is installed in the 4th baggage compartment and has its own MUX controlled electrical fan.

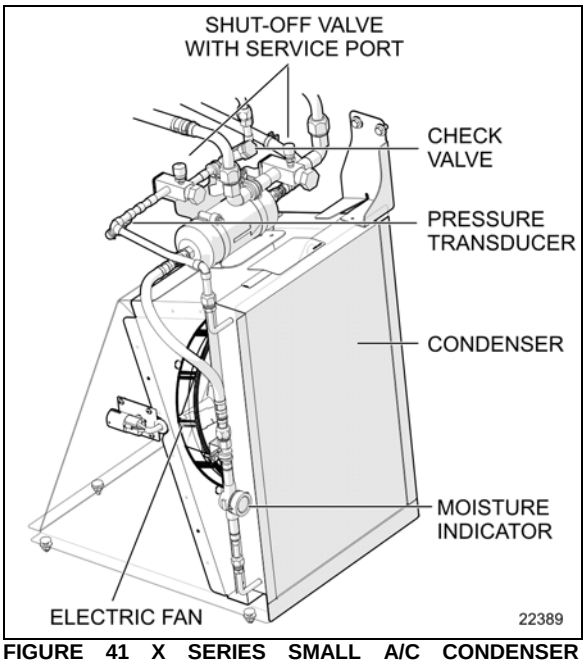

FIGURE 41 X SERIES SMALL A/C CONDENSER ASSEMBLY.

4.6 RECEIVER TANK

The receiver tank is located in the condenser compartment (Figure 42). The function of the receiver tank is to store the liquid refrigerant. During normal operation, the level of the refrigerant should be approximately at the mid-point of the lower sight glass.

MAINTENANCE

Check refrigerant level and add if necessary, at the intervals specified by the Lubrication And Servicing Schedule in Section 24: LUBRICATION & SERVICING.

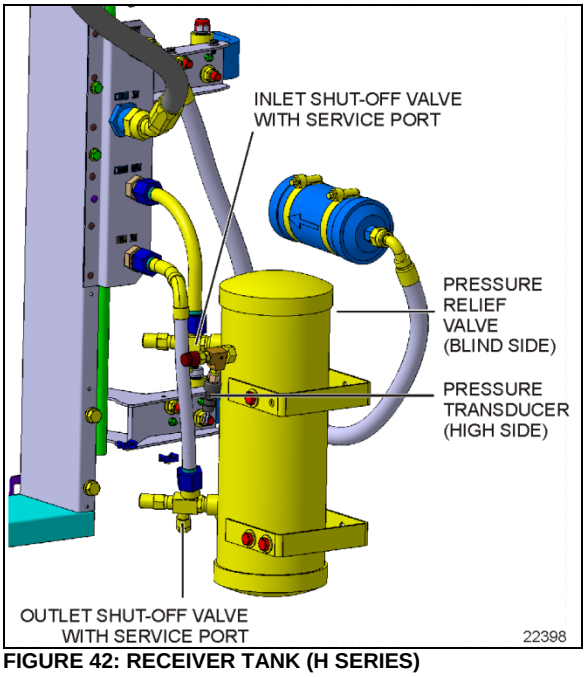

FIGURE 42: RECEIVER TANK (H SERIES)

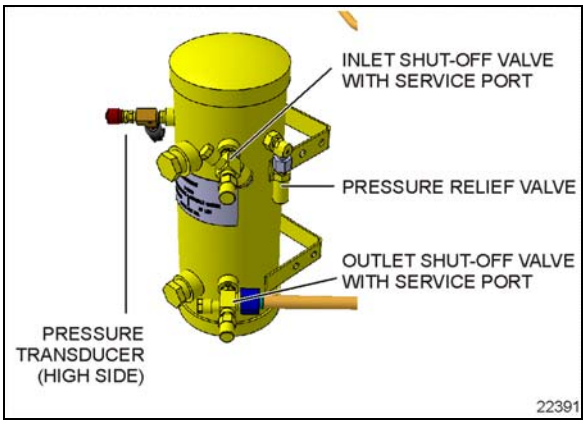

FIGURE 43 RECEIVER TANK X SERIES

In case of extreme pressure there will be a rise in the liquid receiver tank. A pressure relief valve will break at 450 psi and relieve the receiver tank pressure.

The receiver tank incorporates an inlet valve on the inlet side (upper section) which allows the tank to be isolated or serviced. An outlet valve on the outlet side (lower section) permits complete isolation from the rest of the system.

During **normal operation**, inlet and outlet shut-off valves are in backseated position (stem out).

When connecting a gauge to the service port, make sure the shut-off valve is in backseated position because the service port is not fitted with a Schrader valve.

4.7 FILTER-DRYER

A filter-dryer, also located in the condenser compartment, is installed on the liquid refrigerant line after the receiver tank. It is used to absorb moisture and foreign matter from refrigerant before it reaches the expansion valves.

The filter-dryer should be replaced after a severe system failure, after a prolonged exposure and most important, when the moisture indicator sight glass turns to pink.

4.7.1 Replacement of the Filter-Dryer After Pumping Down

The filter-dryer is of the disposable type. When replacement is required, remove and discard the complete unit and replace with a new unit of the same type according to this procedure:

1. Perform the pumping down procedure to isolate refrigerant in the receiver tank.
2. Disconnect C24 to isolate the section of the system located between the receiver tank outlet shut-off valve and the passengers unit liquid solenoid valve.
3. Change the filter-dryer.

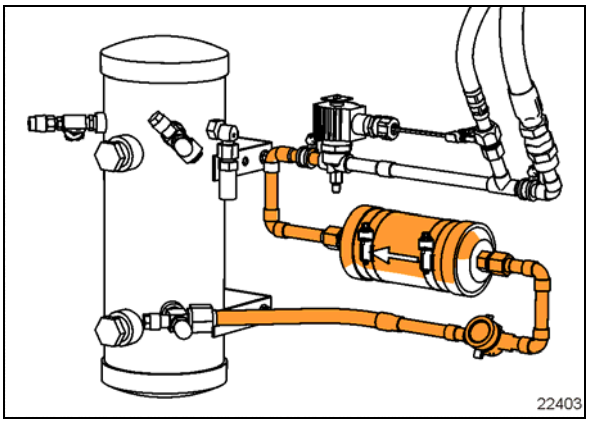

FIGURE 44: ISOLATED SECTION X SERIES

4. Once the filter-dryer has been replaced, it is necessary to evacuate the opened section of the refrigerant circuit. Evacuate the isolated section of the system using a vacuum pump connected to the service port of the receiver outlet shut-off valve.
5. Evacuate the section of the refrigerant piping as needed and in accordance with best practices, using a micron gauge to monitor the depth of vacuum. Evacuate to a system pressure less than 1000 microns.
6. Turn off the vacuum pump.
7. Backseat the outlet shut-off valve and then disconnect the vacuum pump hose.

CAUTION

Do not use carbon tetrachloride or similar solvents to clean parts. Do not use steam gun. Use mineral spirits or naphtha. All parts should be thoroughly cleaned. Use a stiff brush to wash dirt from grooves, holes, etc.

DANGER

Cleaning products are flammable and may explode under certain conditions. Always handle in a well ventilated area.

4.8 MOISTURE INDICATOR

The moisture sensitive element consists of a color changing ring which is reversible from pink to blue and vice versa as the moisture content in the refrigerant changes.

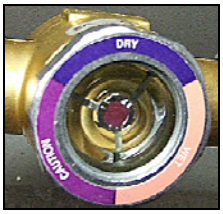

- PINK: high levels of moisture detected.
- PURPLE (caution): low levels of moisture detected.
- BLUE: dry, optimal operating conditions.

Since temperature changes affect the solubility, color change will also vary with the refrigerant temperature. The above table shows the color change for R-134a at various moisture levels and liquid line refrigerant temperatures.

MAINTENANCE

Check refrigerant moisture indicator at the intervals specified by the Lubrication And Servicing Schedule in Section 24: LUBRICATION & SERVICING.

Replace filter-dryer unit according to moisture indicator

COLOR INDICATOR			
TEMPERATURE	BLUE (ppm)	LIGHT VIOLET (ppm)	PINK (ppm)
75°F (24°C)	20	35	130
100°F (38°C)	35	55	160
125°F (52°C)	60	65	190
p.p.m.= parts per million (moisture content)			

A moisture level of less than 15 p.p.m. for R-134a indicated in the blue color range of the above table is generally considered dry and safe. A color indication of light blue to light violet indicates the caution range of moisture level. For positive protection, the drying of the system should be continued until the color of the element turns to deep blue.

The liquid refrigerant is readily visible through the center opening of the moisture element where the presence of bubbles or flash gas indicates an insufficient system charge, low head pressure, insufficient liquid sub cooling or some form of restriction in the liquid line.

Moisture is one of the main causes of chemical instability or contamination in air conditioning systems. If moisture is present, it can corrode the valves, condenser and evaporator coils, compressor and other components causing a malfunction and eventual failure of the system. Uncontrolled moisture in the system can result in very expensive multiple component replacements if not corrected at an early stage. The moisture indicator permits an early detection of moisture in the system and when corrected by a desiccant charge, system contamination is greatly minimized.

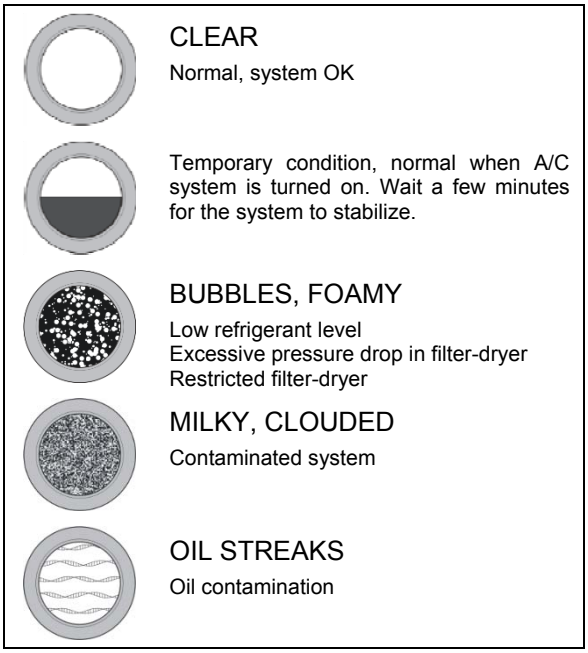

FIGURE 45: CONDITIONS THAT MAY BE OBSERVED IN THE MOISTURE INDICATOR SIGHT GLASS

4.9 SHUT-OFF VALVE WITH SERVICE PORT

This shut-off valve (FIGURE 46) is located in the condenser compartment. It is used to isolate one section of the refrigerant circuit. The service port is equipped with a Schrader valve.

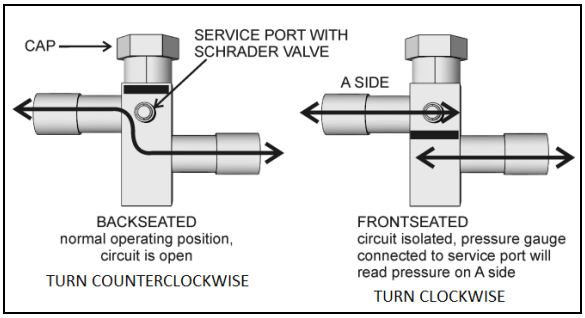

FIGURE 46: REFRIGERANT CIRCUIT SHUT-OFF VALVE

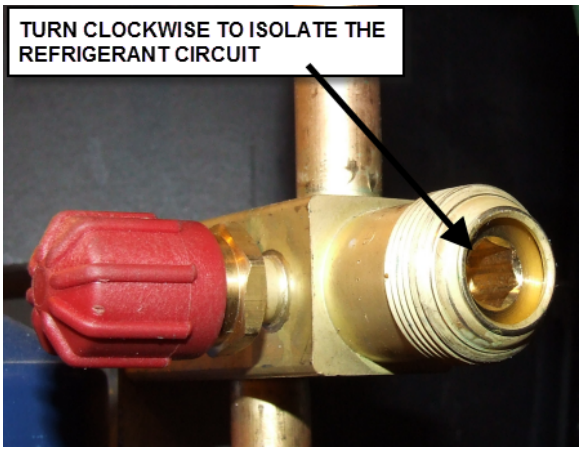

FIGURE 47: REFRIGERANT CIRCUIT SHUT-OFF VALVE

4.10 LIQUID REFRIGERANT SOLENOID VALVE

The flow of liquid refrigerant to the driver's unit evaporator, passengers' unit evaporator (main evaporator) and overhead compartments evaporator is controlled by one NC (normally closed) solenoid valve on each circuit, for a total of three solenoid valves.

The driver's unit solenoid valve is located on the ceiling of the spare wheel compartment (FIGURE 48) and is accessible through the reclining bumper.

Two identical NC (normally closed) refrigerant solenoid valves are found in the condenser compartment (FIGURE 49). One is used to control flow of refrigerant to the overhead compartments evaporator while the other is used to control flow to the driver's and passenger's main evaporators.

On H3 VIP, one identical refrigerant solenoid valve is used on the small HVAC system auxiliary unit (Figure 9).

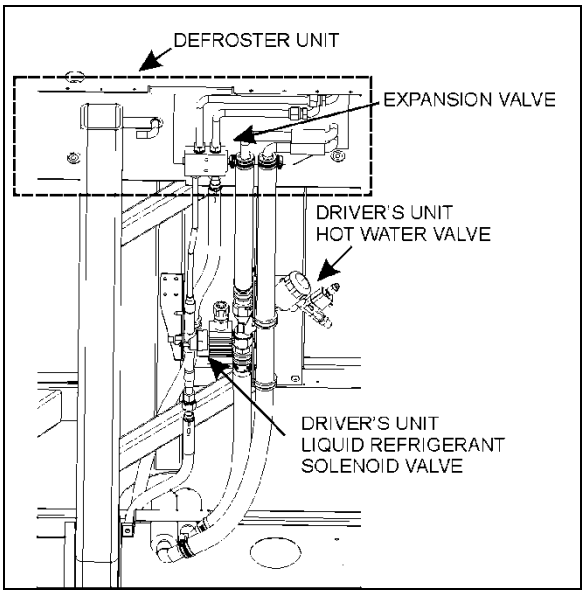

FIGURE 48: DRIVER'S UNIT LIQUID SOLENOID VALVE

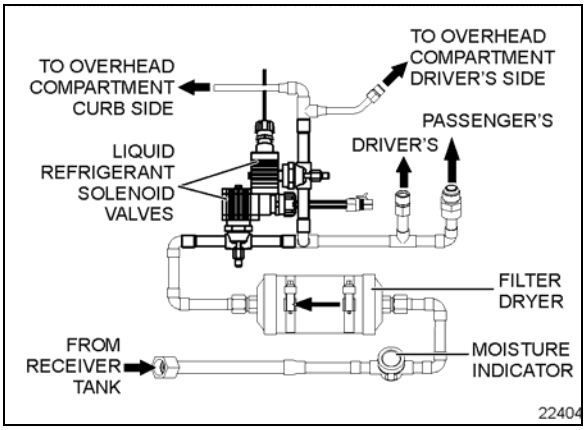

FIGURE 49: LIQUID REFRIGERANT SOLENOID VALVES IN CONDENSER COMPARTMENT (X-SERIES)

4.10.1 Typical malfunctions

Faulty control circuit: Check the electric system by energizing the solenoid with 24-V DC. A metallic clicking noise indicates that the solenoid is operating. Absence of clicking indicates a loss of power or a defective solenoid. Check for open breaker, open-circuited or grounded coil, broken lead wires.

Burned-out coil: Check for open-circuited coil. Replace coil if necessary.

Low voltage: Check voltage across the coil leads. Voltage must be at least 85% of nameplate rating.

Excessive leakage: Disassemble valve and clean all parts. Replace worn or damaged parts with a complete repair kit for best results.

There are only three main possible malfunctions:

1. Coil burnout.
2. Failure to open.
3. Failure to close.

Each is discussed in *Sporlan Parker Hannifin Solenoid Valve Installation and Servicing* bulletin included on your Technical Publications USB flash drive.

4.10.2 Electrical Bypass/On Demand Opening of liquid refrigerant solenoid valves

To ease purging, pumping down and refilling of refrigerant, it is possible to open the liquid solenoid valves (normally closed NC). To do so, uncap and connect plug and socket housings of connector **C24 together for the passengers' unit and overhead compartment units liquid solenoid valves** (located on the HVAC module in evaporator compartment) or **C44 for the driver's unit liquid solenoid valve** (located on the ceiling of the spare wheel compartment). During normal use, both plug and socket housings of connector C24 or C44 are to be kept unplugged and capped.

CAUTION

Connectors C24 & C44 must be disconnected and their caps reinstalled after this procedure. Leaving them connected will keep the driver's, passengers and overhead compartment liquid solenoid valves open, and result in battery draining if the bus remains unused for several days.

4.10.3 Coil Replacement

1. Unplug coil connector.
2. Take out the retaining screw at the top of the coil housing. The entire coil assembly can then be lifted off the enclosing tube.
3. Place the new coil on the enclosing tube. Lay data identification plate in place.
4. Insert the coil retaining screw, rotate coil housing to proper position and tighten screw securely.
5. Plug coil connector.

4.10.4 Valve Disassembly

1. Because of possible damage to valve components due to the high temperature of soldering and brazing, it is necessary to completely disassemble the **A & B series** valves before any heat is applied to the valve body. For **E series** (extended copper connections), braze into the line without disassembly because the valve contains extended connections. Use caution by placing a wet cloth or chill block on the extensions at the body to prevent excessive overheating.
2. Remove the coil as stated previously.
3. Pump down the system as stated in this section.
4. Remove the enclosing tube and locknut, all internal parts, and manual lift stem assembly.

NOTE

The previous procedure must be followed before brazing solder-type bodies into the line.

CAUTION

Be careful not to damage the machined faces while the valve is apart.

4.10.5 Valve Reassembly

1. Place the seat disc into the valve body with the smaller diameter end facing up.
2. Place the enclosing tube gasket onto the valve body above the threads.
3. Hold the plunger with one hand so that the pointed end is resting in the pilot port of the disk. Make sure the small spring is in place on the top of the plunger.
4. With the other hand, place the enclosing tube over the plunger, making sure the enclosing tube gasket is in position.
5. Put back the enclosing tube locknut and tighten. Do not over tighten.

TORQUE: 20-40 lb-ft (27-54 Nm)

6. Put back manual lift stem. Tighten lift stem assembly and seal cap.

TORQUE: 11 lb-ft (15 Nm)

7. Place the coil assembly.

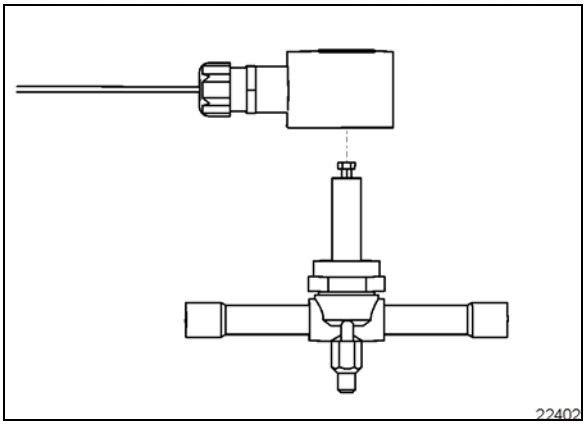

FIGURE 50: TYPICAL REFRIGERANT SOLENOID VALVE

CAUTION

The filter-dryer must be replaced after a severe system failure or if a line in the system has been opened over a prolonged period of time. The line will then have to be properly evacuated.

Best practice would be to replace the filter-dryer each time a line is opened.

CAUTION

Be careful not to damage the machined faces while the valve is apart.

4.11 THERMOSTATIC EXPANSION VALVE

4.11.1 Central System

The expansion valve for the main system is a thermo-sensitive valve with a remote control bulb head attached to the evaporator outlet line and is accessible by the evaporator filter access door. The valve regulates the flow of refrigerant liquid into the evaporator coils and is controlled by the suction gas temperature leaving the evaporator. The bulb head senses the refrigerant gas temperature as it leaves the evaporator. High temperature will cause expansion and pressure on the power head and spring. Such action causes the assembly valve to open, allowing a flow of refrigerant liquid into the evaporator.

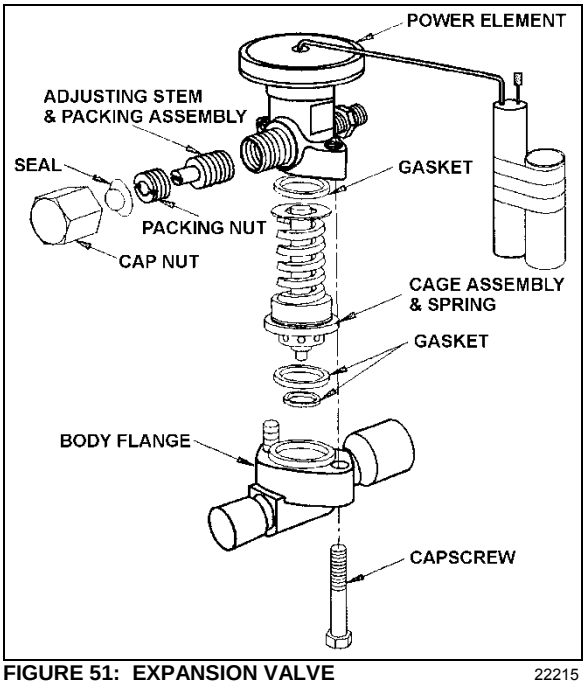

FIGURE 51: EXPANSION VALVE 22215

The remote bulb and power assembly is a closed system. The pressure within the remote bulb and power assembly corresponds to the saturation pressure of the refrigerant temperature leaving the evaporator and moves the valve pin in the opening direction. Opposed to this force, on the under side of the diaphragm and acting in the closing direction, is the force exerted by the superheat spring. As the temperature of the refrigerant gas at the evaporator outlet increases above the saturation temperature corresponding to the evaporator pressure, it becomes superheated. The pressure thus generated in the remote bulb and power assembly surpasses the combined pressures of the evaporator pressure and the superheat spring, causing the valve pin to move in the opening direction.

Conversely, as the temperature of the **refrigerant** gas leaving the evaporator decreases, the pressure in the remote bulb and power assembly also decreases and the combined evaporator and spring pressures cause the valve pin to move in the closing position.

As the operating superheat is raised, the evaporator capacity decreases, since more of the evaporator surface is required to produce the superheat necessary to open the valve. It is obvious, then, that it is most important to adjust the operating superheat correctly and that a minimum change in superheat to move the valve

pin to full open position, is of vital importance because it provides savings in both initial evaporator cost of operation.

Accurate and sensitive control of the refrigerant liquid flowing to the evaporator is necessary to provide maximum evaporator capacity under load conditions. The spring is adjusted to give 12 to 16° F (-11.1 to -8.8 ° C) of superheat at the evaporator outlet.

This ensures that the refrigerant leaving the evaporator is in a completely gaseous state when drawn into the suction side of the compressor. Liquid would damage the compressor valve, piston and heads if allowed to return in the suction line.

A vapor is said to be superheated when its temperature is higher than the saturation temperature corresponding to its pressure. The amount of the superheat is, of course, the temperature increase above the saturation temperature at the existing pressure.

As the refrigerant moves along in the evaporator, the liquid boils off into a vapor and the amount of liquid decreases until all the liquid has evaporated due to the absorption of a quantity of heat from the surrounding atmosphere equal to the latent heat of vaporization of the refrigerant. The gas continues along in the evaporator and remains at the same pressure. However, its temperature increases due to the continued absorption of heat from the surrounding atmosphere. The degree to which the gas refrigerant is superheated is related to the amount of refrigerant being fed to the evaporator and the load to which the evaporator is exposed.

4.11.2 Superheat Adjustment

Expansion valves are factory preset for optimum superheat settings. This setting should be modified only if absolutely necessary. The readjustment should be at the lowest expected evaporating temperature.

1. Operate coach for at least one-half hour at fast idle with temperature control set at 82°F (27,7°C), Then set temperature to minimum to keep the compressor on 4 cylinders.

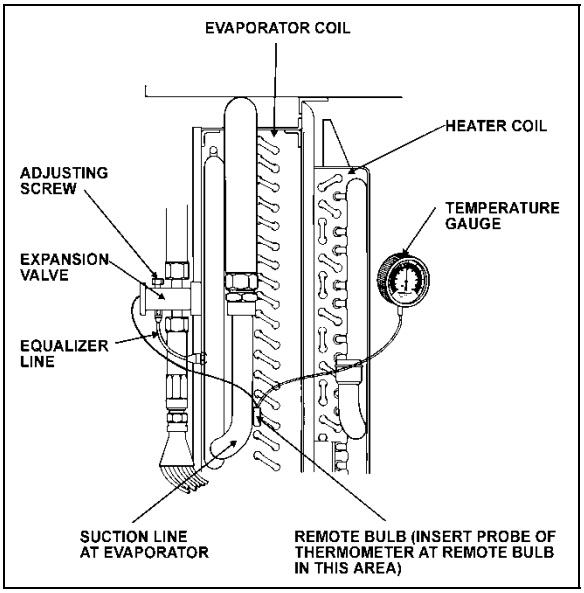

FIGURE 52: SUPERHEAT ADJUST. INSTALLATION 22046

2. In the DID “Gages” Menu note the indicated “LoS” (Low side) pressure.
3. Use a remote reading thermometer or thermocouple / multimeter to measure temperature at the evaporator outlet line near the existing remote bulb (Figure 52).
4. Apply thermostatic tape around the bulb and evaporator outlet line to get a true reading of the line temperature.
5. Block condenser if necessary to keep pressure over 150 psi.
6. Check approximately 5 readings of pressure at 2-minute intervals and convert to temperature using the vapor-pressure table. Likewise check the temperature reading at the remote bulb at the same 2-minute intervals and record the low and high swing readings of the needle (Figure 53).

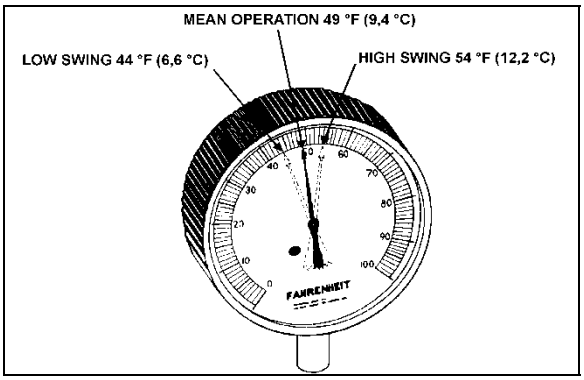

FIGURE 53: HIGH & LOW SWING TEMPERATURE AT REMOTE BULB 22047

Example of readings taken:

A/C pressure gauge at compressor suction converted to temperature with chart	40°F
Temperature on remote bulb	Low swing 44°F
	High swing 54°F
Average of low and high swing	49°F
Formula for superheat T° at bulb – T° suction = T° superheat 49°F – 40°F = 9°F	

NOTE

The low swing of the superheat should be a minimum of 4°F (2,2°C) higher at the remote bulb and have an average of 12 to 16°F (4 to 6°C) higher range at the bulb than the fitting at the expansion valve.

NOTE

The thermal expansion valve has a MOP (maximum operating pressure) of 55 psi. At this setting, the valve is completely opened.

If the temperature at the bulb is greater than 50°F, do not try to adjust superheat as the valve is almost completely opened.

NOTE

To reduce the superheat, increase refrigerant flow by turning adjusting screw counterclockwise on expansion valve. To increase superheat, flow of refrigerant is reduced by turning adjustment screw of clockwise.

7. Regulate suction pressure to temperature reading according to temperature chart or to the R-134a temperature scale on the pressure gauge.

Example: Suction pressure 30 psi (207 kPa) converted to 32°F (0°C) on chart. If temperature reading is 40°F (4,4°C), subtract 32°F (0°C) and the result will be 8°F (4,4°C) of superheat.

CAUTION

Before proceeding with the expansion valve adjustment, check for restriction on suction side for plugged filter-dryer and partially open valves. These conditions will give a high superheat.

4.11.3 Maintenance

1. Pump down the system as previously indicated in this section.
2. Disconnect the external equalizer line from the underside of the power head, and unclamp the remote control bulb from the evaporator coil outlet line.
3. Remove the two cap screws holding the power assembly to the valve body flange. Lift off the power assembly and remove the cage assembly.
4. When reassembling, replace with the new gaskets in proper location. Make sure the two lugs on the cage assembly fit into grooves provided in the power assembly. Do not force the valves together. The cage must fit properly before tightening the body flange. Tighten bolts evenly.
5. Check for leaks.

Safety Instructions

1. Make sure the valve is installed with the flow arrow on the valve body corresponding to the flow direction through the piping system.
2. Before opening any system, make sure the pressure in the system is brought to and remains at the atmospheric pressure. Failure to comply may result in system damage and/or personal injury.

4.11.4 Driver's Unit

The function and operation of the driver's unit expansion valve are similar to the central system, but no superheat adjustment is required (**FIGURE 48**).

4.12 HOT WATER PNEUMATIC VALVE

No maintenance is needed unless a malfunction occurs. Refer to Prevost parts manual for available service kits. Valve is normally closed.

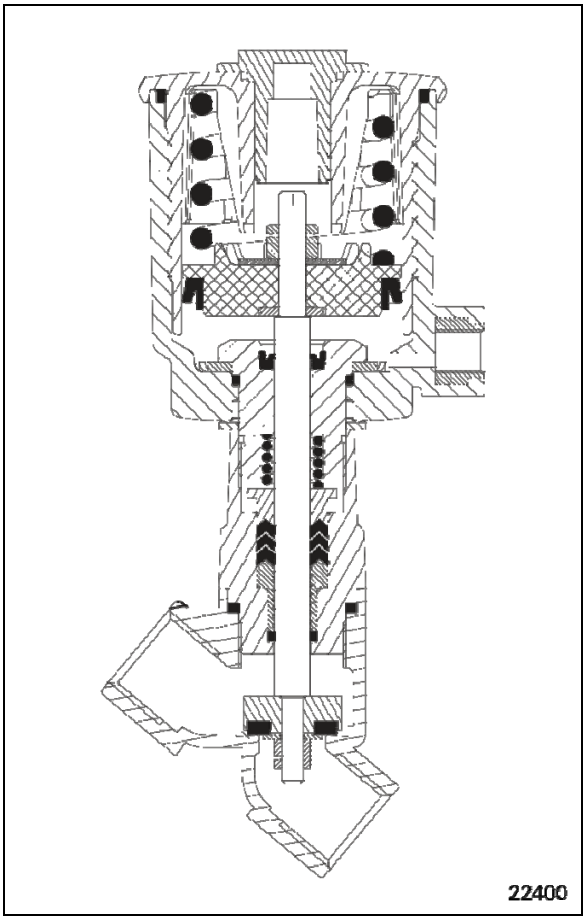

FIGURE 54: PASSENGER'S UNIT PNEUMATIC HOT WATER VALVE – TYPICAL CUT-OUT VIEW

4.12.1 Valve Troubleshooting

PROBLEM	PROCEDURE
Valve fails to close	1. Check electrical supply with a voltmeter. It should agree with nameplate rating. 2. Check pressure at pilot solenoid valve inlet. It must be at least equal to the minimum pressure stamped on the nameplate. It should not go below minimum while valve is operating.
Valve fails to open	1. Check that the closure member assembly, and that main actuator and cylinder springs are free to travel. 2. Check that there is no restriction to the air escaping from the actuator casing. 3. Make sure that pilot solenoid valve operates properly.

4.13 HOT WATER CIRCULATING PUMP

4.13.1 Central HVAC system

The vehicle is provided with a seal-less/brushless water circulating pump which is located in:

- H3 Series - evaporator compartment
- X3 Series - coolant preheater compartment (Figure 56)
- Additional circulating pump in the first curbside baggage compartment with optional upper windshield defrost unit

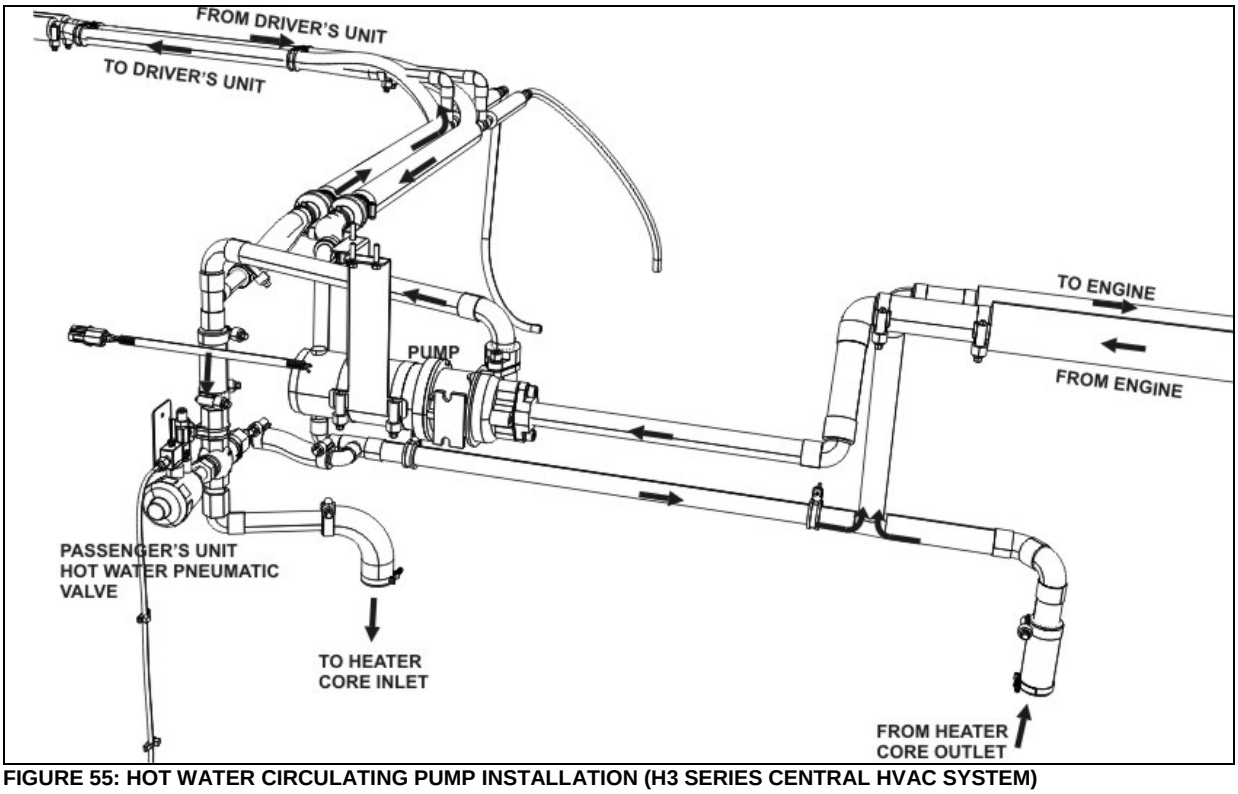

FIGURE 55: HOT WATER CIRCULATING PUMP INSTALLATION (H3 SERIES CENTRAL HVAC SYSTEM)

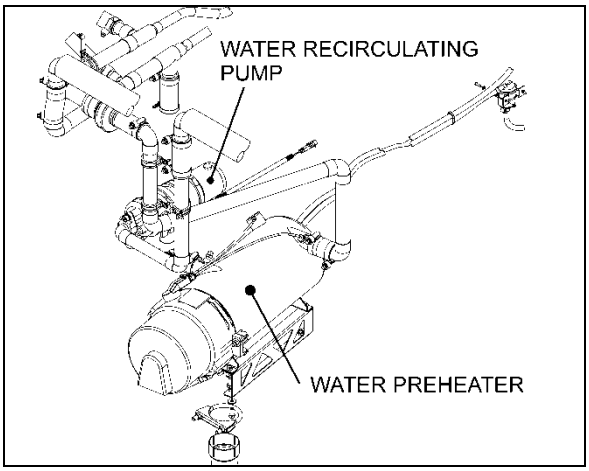

FIGURE 56: PUMP LOCATION – X3 SERIES (CENTRAL A/C) 22331

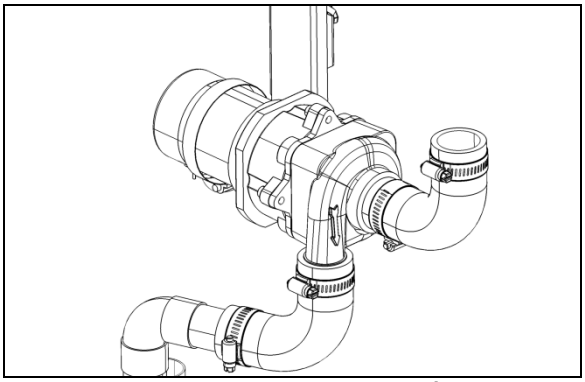

FIGURE 57: WATER CIRCULATING PUMP (CENTRAL A/C)

4.13.2 Small HVAC system

Water circulating pump which is located on the ceiling of the spare wheel compartment (Figure 58)

The water circulating pump consists of a centrifugal pump and an electric motor which are mounted in a compact assembly.

The seal-less/brushless pump requires no periodic maintenance. The pump motor is not repairable but can be separated from the impeller housing. In case of pump impeller failure, refer to Ametek 18 GPM Seal-Less ECDC Water Circulating Pump manual for repair. Inspection of the pump, to determine if the pump is working properly, should be made while the pump is in operation.

If there is evidence that the pump is not operating as per specifications, the unit must be disassembled for repair (impeller assembly only).

NOTE

For complete information on seal-less water circulating pump, refer to Ametek 18 GPM Seal-Less ECDC Water Circulating Pump manual. Take note that the motor described in this manual is different from the one installed on your circulating pump which is not repairable.

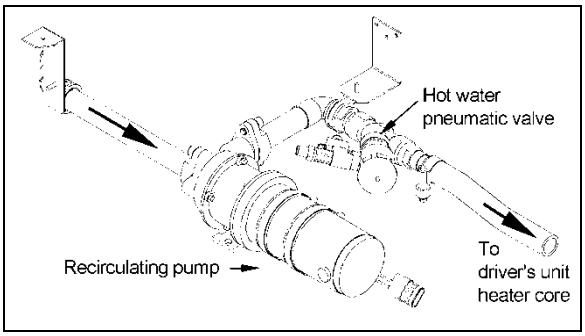

FIGURE 58: HOT WATER CIRCULATING PUMP INSTALLATION (SMALL HVAC SYSTEM) 22292

4.13.3 Removal

1. Stop engine and allow engine coolant to cool.
2. Close shutoff valves on the heater line. Refer to Figure 72 ou Figure 73 in this section to gain access to the heater line shutoff valve.
3. Disconnect the electrical wiring from the motor.

WARNING

Before proceeding with the following steps, check that coolant has cooled down.

4. Disconnect water lines from the pump at the fittings.
5. Remove the two clamps holding the pump motor to its mounting bracket. Remove the pump with the motor as an assembly.

4.13.4 Installation

1. Connect water lines to the pump. Position the pump and motor assembly on the mounting bracket. Position the mounting clamps over the motor and secure with mounting bolts.
2. Connect electrical wiring to the pump motor.

3. Open both shutoff valves.
4. Fill the cooling system as previously instructed in this section under 6.4.4 Filling Heating System and then bleed the system as previously instructed in this section.

5. HVAC SYSTEM TESTING AND TROUBLESHOOTING

Before undertaking any troubleshooting on the HVAC system, study the appropriate wiring diagrams to get a complete understanding of the HVAC components circuitry, read and understand section 06: ELECTRICAL of this manual under "Troubleshooting And Testing The Multiplex Vehicles" and "Test Mode For Switches And Sensors". The information included in these paragraphs is necessary for troubleshooting the HVAC system on Multiplex vehicles.

5.1 ON DEMAND DISPLAY OF A/C SYSTEM HIGH AND LOW SIDE PRESSURE

Refrigerant pressures can be displayed in the Driver Information Display (DID) by selecting “Gauges” menu and pressing the down arrow to the fifth displayed screen.

A/C Compressor Pressure

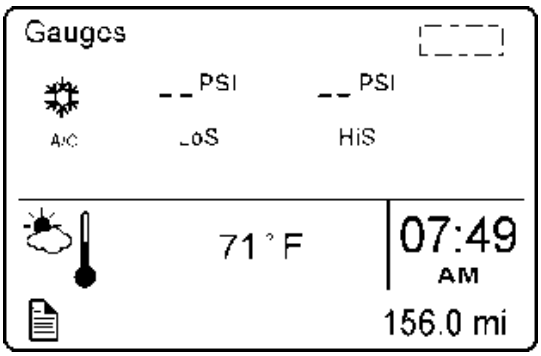

Displays the A/C system’s suction pressure value (LoS=low side) and discharge pressure value (HiS=high side).

NOTE

When starting the A/C compressor, allow enough time before checking pressures in order to give the system a chance to build its pressure. During the first 3 seconds after startup, the compressor is active on 4 cylinders and the A/C valve is open regardless of the pressure readings.

5.2 ON DEMAND ACTIVATION OF HOT WATER CIRCULATING PUMP

In Diagnostics/Vehicle Test mode on the DID, the heating system circulating pump can be turned on manually by selecting ACTIVATE HVAC PUMP command. This feature allows verification of the circulating pump when inside a garage. This is also useful when working on the heating system to remove air pockets trapped in the system.

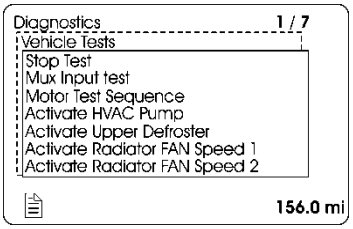

In normal operation, the heating system circulating pump operates only when the ambient temperature is 50°F or lower.

5.3 TEMPERATURE SENSORS

The following table can be used for troubleshooting the following temperature sensors:

1) Driver area temperature sensor (SE21);
2) Passenger area temperature sensor (SE25);
3) Outside air temperature sensor (SE20).

NOTE
The driver's area air temperature sensor is located below the dashboard, just ahead of the driver's right knee.

NOTE
VIP vehicles equipped with Small HVAC System have two air temperature sensors; the driver's area temperature sensor (same place as coaches) and the exterior temperature sensor located behind the reclining bumper.

The table values are for unloaded, disconnected temperature sensor (thermistor) probed at the temperature sensor connector pins.

If the temperature sensor resistance value is measured at the multiplex module inputs, the measured value includes a parallel 33 kohms resistor.

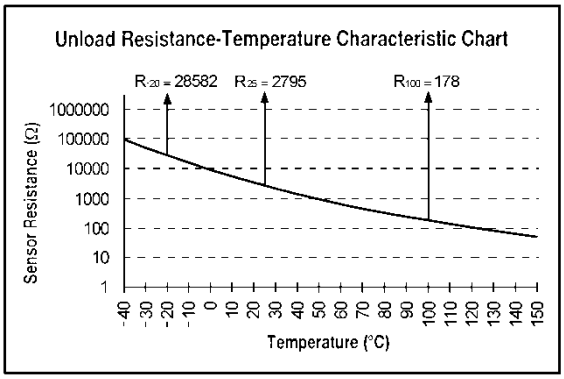

TEMPERATURE SENSOR		
Temp °C	**Temp °F**	**Resistance Ohms (temperature sensor disconnected)**
-40	-40	100865
-35	-31	72437
-30	-22	52594
-25	-13	38583
-20	-4	28582
-15	5	21371
-10	14	16120
-5	23	12261
0	32	9399
5	41	7263
10	50	5658
15	59	4441
20	68	3511
25	77	2795
30	86	2240
35	95	1806
40	104	1465
45	113	1195
50	122	980
55	131	808
60	140	670
65	149	559
70	158	468
75	167	394
80	176	333
85	185	283
90	194	241
95	203	207
100	212	178
105	221	153
110	230	133
115	239	115
120	248	100
125	257	88
130	266	77
135	275	68
140	284	60
145	293	53
150	302	47

5.4 TEST MODE FOR SWITCHES AND SENSORS

When in switch/sensor test mode (see Section 06: ELECTRICAL for complete information), the A/C compressor HI and LO pressure values are displayed one after the other instead of the outside temperature in the telltale panel LCD display. This feature can be used when the

vehicle is traveling to check the A/C compressor pressure values.

In test mode, with the parking brake applied and the passenger set point set to a value higher than 64°F (18°C), the hot water circulating pump is not set to OFF as it would normally do when the outside temperature gets above 50°F (10°C). This feature allows verification of the pump when inside a garage. This is also useful when working on the heating system to remove air pockets trapped in the system.

When performing an A/C cooling test and having the water pump shut off in switch/sensor test mode is required, just set the passenger set point temperature to the minimum 64°F (18°C) to shut off the pump.

5.5 TEST MODE FOR ELECTRIC MOTORS

The test mode allows testing the motors and electric contactors without the need to have the engine running.

Use this test mode for testing of the condenser fans, evaporator fans, overhead compartment fans, A/C compressor clutch activation, A/C compressor unloader activation, driver's unit hot water solenoid valve and refrigerant solenoid valve, passengers' unit hot water solenoid valve and refrigerant solenoid valve, water circulating pump. Refer to Section 06: ELECTRICAL under "TEST MODE FOR ELECTRICAL MOTORS" for complete information.

5.6 MODES OF OPERATION

COOLING DEMAND Conditions for engaging the 2nd speed on the evaporator motor	- The 2nd speed engages if the passengers' area temperature is 1 degree above the set point and it revert to speed 1 if the temperature gets equal or below the set point.
HEATING DEMAND Conditions for hot water circulating pump activation	- The pump turns ON if the outside temperature is equal or less than 50°F (10°C), when heating is more likely to be needed Note: To test pump operation, it is possible to keep it active even if the outside temperature is above 50°F (10°C). See paragraph 5.2 ON DEMAND ACTIVATION OF HOT WATER CIRCULATING PUMP.
The compressor unloader operation is based on pressure and on the difference between the passengers' area temperature and set point.	**right compressor cylinders** - Stop if: The passengers' area decreasing temperature becomes less than 0.4°F above the set point (68°F) or if compressor discharge pressure is above 290 psi, or if compressor suction pressure is below 23 psi. - Restart if: The Passengers' area temperature is 1.3°F or more above the set point and compressor discharge pressure is less than 250 psi and compressor suction pressure is above 32 psi.
A/C compressor deactivation pressure	- 310 psi - In case of high pressure, the high pressure transducer connected to the multiplex module deactivates the compressor - There is also a 350 psi pressure switch that acts to stop the compressor in the instance that the multiplex module fails.
Compressor turns on automatically if (2 required conditions)	outside temperature is above 32°F and return air temperature in passengers' area is 61°F or above (ΔT=7° with set point)

5.7 HVAC ELECTRICAL SYSTEM TROUBLESHOOTING

Always check DID for electrical faults before performing repairs. Address any modules not responding and take corrective action. This should be the first step in troubleshooting.

Problem/Symptom	Probable Causes	Actions
No temperature control in the passenger area Passenger temperature display indicates two dashes "--"	Problem with the temperature sensor located in the passenger's area return air duct or the sensor wiring	1. Instruct the driver to manually control the temperature by playing with the passenger set point. Set above 22°C (72°F) to heat and below 22° C (72°F) to cool
Defroster fan not functioning	Module AE47 is not powered or is faulty Module A24 is not powered or is faulty Module A30 is not powered or is faulty (H3 VIP & X3 VIP only)	2. Check the Diagnostics menu of the Driver Information Display (DID). Select Fault Diagnostics and Electrical System. The message "No Response ModA47 (or ModA24), Active" indicates a power problem on the module. (A CAN network problem would show the same message but doesn't produce these symptoms). 3. Check / reset circuit breaker CB1(CB3 on X3 VIP) 4. Check fuse F16 5. Probe gray connector on module to see if it is powered.
HVAC condenser fans not functioning	Circuit breaker CB7 (CB5 on X3 VIP) tripped Seized bearing Bad wiring Module A54 is not powered or is faulty	1. Check / reset circuit breaker CB7(CB5 on X3 VIP) 2. Check/reset CB15, CB16, CB17, CB18 on HVAC control module 3. Check / replace condenser power relay R10 (probe R10 coil power circuit 67A, should be 24 volts). 4. Check the Diagnostics menu of Driver Information Display (DID). Select Fault Diagnostics and Electrical System. The message "No Response ModA54, Active" indicates a power problem on the module. (A CAN network problem would show the same message but doesn't produce this symptom). 5. Check fuse F67 Check CB5 except: X3 VIP check CB7

Problem/Symptom	Probable Causes	Actions
HVAC condenser fans not functioning in speed 1	Module A49 (A54 on H3 VIP & X3 VIP) is not powered or is faulty	1. Check the Diagnostics menu of Driver Information Display (DID). Select Fault Diagnostics and Electrical System. The message “No Response ModA49, Active” indicates a power problem on the module. (A CAN network problem would show the same message but doesn't produce this symptom). 2. Check / reset circuit breaker CB5 except: X3 VIP check CB7 3. Check fuse F65 except : H3 VIP check F67+F68 X3 VIP check F67 4. Probe gray connector on module to see if it is powered.
HVAC condenser fans not functioning in speed 2	Circuit breaker CB7 (CB5 on X3 VIP) tripped Seized bearing Bad wiring	1. Check / reset circuit breaker CB7 2. See *HVAC condenser fans not functioning* & *HVAC condenser fans not functioning in speed 1* above.
Defroster fan is functioning but no heat or cooling available in the driver’s area	Module A46 is not powered or is faulty Bad wiring	1. Check the Diagnostics menu of Driver Information Display (DID). Select Fault Diagnostics and Electrical System. The message “No Response ModA46, Active” indicates a power problem on the module. (A CAN network problem would show the same message but doesn't produce these symptoms). 2. Check / reset circuit breaker CB1(CB7 on X3 VIP) 3. Check fuse F12V & F13 except X3 VIP 4. X3 VIP check fuse F65 5. Probe gray connector on module to see if it is powered.
The A/C compressor clutch does not engage	Module A52 is not powered or is faulty	1. Check the Diagnostics menu of Driver Information Display (DID). Select Fault Diagnostics and Electrical System. The message “No Response ModA52, Active” indicates a power problem on the module. (A CAN network problem would show the same message but doesn't produce this symptom). 2. Check / reset circuit breaker CB5 3. Check fuse F65 4. Probe gray connector on module to see if it is powered.

Problem/Symptom	Probable Causes	Actions
Evaporator fan not functioning	Circuit breaker CB3 (CB6 on X3 VIP) tripped Module A54 is not powered or is faulty	1. Check / reset circuit breaker CB3 (CB6 on X3 VIP) 2. Check the Diagnostics menu of Driver Information Display (DID). Select Fault Diagnostics and Electrical System. The message “No Response ModA54, Active” indicates a power problem on the module. (A CAN network problem would show the same message but doesn't produce this symptom). 3. Check / reset circuit breaker CB5 except: X3 VIP check CB7 4. Check fuse F67 5. Probe gray connector on module to see if it is powered. 6. Check / replace condenser power relay R12 (probe R12 coil power circuit 67, should be 24 volts).

5.7.1 Air Conditioning

TROUBLE	CAUSE
Low suction pressure and frosting at dryer outlet.	Clogged filter.
Low Oil Level.	Check for oil leaks and for leaking oil seal. Do not attempt to check oil level unless system has been stabilized at least 20 minutes. See oil level verification.
Excessively cold suction line And High superheat	Loss of contact between the expansion valve bulb and the suction line or sticking of the expansion valve. Improper insulation. Check for corrosion and clean, repair or replace the valve.
Noisy or knocking compressor.	Check for broken internal parts. Overhaul if required.
Compressor vibrates excessively.	Check and tighten compressor mounting bolts and belt tension.
Low refrigerant level	Check for refrigerant leaks and add refrigerant as required.
Suction pressure rises fast after shutdown.	Check compressor valve for breakage or damage.
Insufficient air flow.	Dirty or iced evaporator. Dirty air filter. Blowers inactive. Clogged ducts.
No flow of refrigerant through expansion valve.	Filter-dryer is clogged. Remote bulb has lost charge or expansion valve is defective.
Expansion valve hisses. Bubbles in moisture and liquid indicator.	Gas in liquid line. Add refrigerant.
Loss of capacity	Clogged filter. Obstructed or defective expansion valve.

TROUBLE	CAUSE
Superheat too high.	Reset superheat adjustment. Check for clogged external equalizer line, or filter-dryer.
Reduced air flow: a. Dirty or clogged air filter; b. Evaporator motor inoperative; or c. Plugged return air ducts.	Dirty or iced evaporator coil. Clean air filter screen. Check return ducts for obstructions. Check blower motor.
Frequent starting and stopping on low pressure control switch.	Lack of refrigerant. Check for leaks. Recharge.
Compressor intermittently starts and stops.	Intermittent contact in electrical control circuit. Compressor valves not in operating position.
Non-condensable in the refrigeration system.	Leak on system, system in vacuum in low temp. Specific symptom, pressure in system will not correspond to ambient temperature on shutdown. Only non-condensable will cause this. (Example: Pressure of idle R-134a system in 80°F (26.6°C) room should be 86.4 psi (595.7 kPa). See temperature chart in this section.) An evaporator just does a proper cooling job without sufficient air. Shortage of air can be caused by the following: o Dirty filters; or o Dirty coils.

Testing condenser pressure.
NOTE: R-134A pressure varies according to temperature.

Example, for an exterior temperature of 100°F.
Exterior temperature (100°F) + 30°F = 130°F.
Take note: 30°F is added to ambient temperature by definition.
Refer to paragraph "5.8 Temperature & Pressure".
Note the corresponding pressure for a temperature of 130°F, 199.8 psi.
Read the condenser pressure, example 171.9 psi.
171.9 psi & 199.8 psi, the pressure in the condenser is inferior to the pressure corresponding to the exterior temperature, in this case the condenser pressure may be too low. Check for refrigerant leaks and add refrigerant if necessary. If the pressure corresponding to the condenser temperature is superior to the pressure corresponding to the exterior temperature, then the air cooled condenser pressure may be too high. Most frequent causes are:

Reduced air quantity. This may be due to:
* Non-condensable in system;
* Dirt on the coil;
* Restricted air inlet or outlet;
* Dirty fan blades;
* Incorrect rotation of fan;
* Fan speed too low;
* Fan motor going out on overload; or
* Prevailing winds.
* Too much refrigerant in system. Remove refrigerant if necessary.

5.7.2 Expansion Valve

PROBABLE CAUSE	PROBABLE REMEDY
LOW SUCTION PRESSURE-HIGH SUPERHEAT	
EXPANSION VALVE LIMITING FLOW:	
Gas in liquid line due to pressure drop in the line or insufficient refrigerant charge.	Locate cause of line flash and correct by use of any of the following methods. Add R-134a. Replace filter-dryer.
Superheat adjustment too high.	Adjust superheat as outlined under "Superheat Adjustment".
Power assembly failure or partial loss of charge.	Replace expansion valve.
Air filter screen clogged.	Clean or replace air filter screen.
Plugged / kinked / chaffed lines.	Clean, repair or replace lines.
LOW SUCTION PRESSURE-LOW SUPERHEAT	
Uneven or inadequate evaporator loading due to poor air distribution or liquid flow.	Balance evaporator load distribution by providing correct air or liquid distribution.
HIGH SUCTION PRESSURE-HIGH SUPERHEAT	
Internally leaking compressor	Locate leak. Repair/ replace.
HIGH SUCTION PRESSURE-LOW SUPERHEAT (DEFECTIVE UNLOADER)	
Valve superheat setting too low.	Adjust superheat as outlined under "Superheat Adjustment".
Compressor discharge valves leaking.	Replace or repair discharge valve.
Incorrect superheat adjustment.	Superheat adjustment 12 to 16°F.
FLUCTUATING DISCHARGE PRESSURE	
Insufficient charge.	Add R-134a to system.
HIGH DISCHARGE PRESSURE	
Air or non-condensable gases in condenser.	Purge and recharge system.
Overcharge or refrigerant.	Recover to proper charge.
Condenser dirty.	Clean condenser.

5.8 TEMPERATURES & PRESSURES CHART

R134a VAPOR-PRESSURE			
TEMPERATURE		PRESSURE	
°F	°C	psi	kPa
-100	-73.3	27.8	191.7
-90	-67.8	26.9	185.5
-80	-62.2	25.6	176.5
-70	-56.7	23.8	164.1
-60	-51.1	21.5	148.2
-50	-45.6	18.5	127.6
-40	-40.0	14.7	101.4
-30	-34.4	9.8	67.6
-20	-29	3.8	26.2
-10	-23	1.8	12.4
0	-18	6.3	43.4
10	-12	11.6	80
20	-7	18.0	124.1
30	-1	25.6	176.5
40	4	34.5	237.9
50	10	44.9	309.6
60	16	56.9	392.3
70	21.1	70.7	487.5
80	27	86.4	595.7
90	32.2	104.2	718.5
100	38	124.3	857.0
110	43.3	146.8	1012.2
120	49	171.9	1185.3
130	54.4	199.8	1377.6
140	60	230.5	1589.3
150	65.6	264.4	1823.0
160	71	301.5	2078.8
170	76.7	342.0	2358.1
180	82.2	385.9	2660.8
190	87.8	433.6	2989.7
200	93.3	485.0	3344.1
210	98.9	540.3	3725.4

5.9 LEAK TESTING

Some methods such as nitrogen pressure and soap, and electronic sniffer can be used for leak testing. However, the most common method used is a "Halide" torch consisting of an acetylene tank, a burner and a suction test hose. Proceed as follows:

DANGER

Do not inhale fumes from leak detector.

The flow of acetylene to the burner causes a depression in the test line. Any gas refrigerant present will be drawn through the hose and into the burner where it decomposes into free acids.

These acids come in contact with the hot copper reaction plate in the burner, causing color reaction in the flame. A small concentration is indicated by a green tint and a large concentration by an intense blue. Do not confuse this change in color with the change caused by shutting off the air supply through the hose by holding the end too close to an object.

The procedure for testing is:

1. Adjust flame so that the top of the cone is approximately level or within one-half inch above the plate.
2. Probe end of suction test tube around all joints, valves, etc. When a leak has been found at a soldered joint, this specific section of the system must be pumped down. Do not solder as pressure will force hot solder out. If the system is empty, it is more economical to put in just enough R-134a to produce about 15 psi (103 kPa). The pressure can be raised to about 150 psi (1034 kPa) with dry nitrogen.

NOTE

This gas is put into the suction and discharge shutoff valves at the compressor. The receiver valves must be opened. If no leaks are found, recover this mixture, evacuate the system and fill with refrigerant.

6. CENTRAL HVAC SYSTEM

The passenger's unit evaporator fan, located in the evaporator compartment on the L.H. side of vehicle is protected by circuit breaker CB3 (CB6 on X3 VIP), 90 amp with manual-reset mounted

in the main power compartment/junction panel (Figure 60 & Figure 61).

The passenger's unit condenser coil mounted on the opposite side of the evaporator is ventilated by four brushless axial fans. The fan motors are protected by circuit breaker CB7 (CB5 on X3 VIP), 70 amp with manual-reset mounted in the main power compartment/junction panel.

Furthermore, the following relays, diodes and multiplex module are located in the evaporator compartment. They are mounted on top of the fan housing.

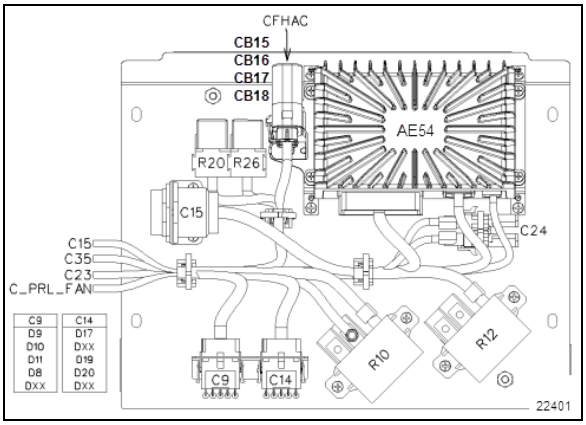

FIGURE 59: HVAC MODULE

A/C Junction Box	
Multiplex Module	
AE54	I/O-B
Relays	
R10	Condenser fan power
R12	Evaporator fan power
R20	Water circulating pump relay
R26	Water Preheater Relay
Diodes	
D8	Overhead compartment Liq. Sol. Valve
D9	Water circulating pump
D10	Water circulating pump
D11	Pass. Liq. Sol. Valve
D17	3rd Baggage Compartment Lights
D19	2nd Baggage Compartment Lights
D20	1st Baggage Compartment Lights
Relevant Breakers	
CB15	15A, Condenser fan up-fore
CB16	15A Condenser fan down-fore
CB17	15A Condenser fan up-aft
CB18	15A Condenser fan down-aft

Multiplex Module (evaporator compartment)	
A54	I/O-B
Relays (evaporator compartment)	
R10	24V Condenser fans
R12	24V Evaporator fan
R20	Water pump
R26	Pre-heating

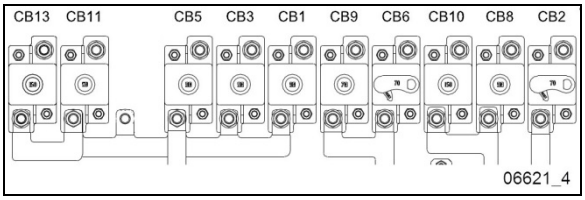

FIGURE 60: X3 SERIES REAR ELECTRICAL JUNCTION PANEL WITH CIRCUIT BREAKERS

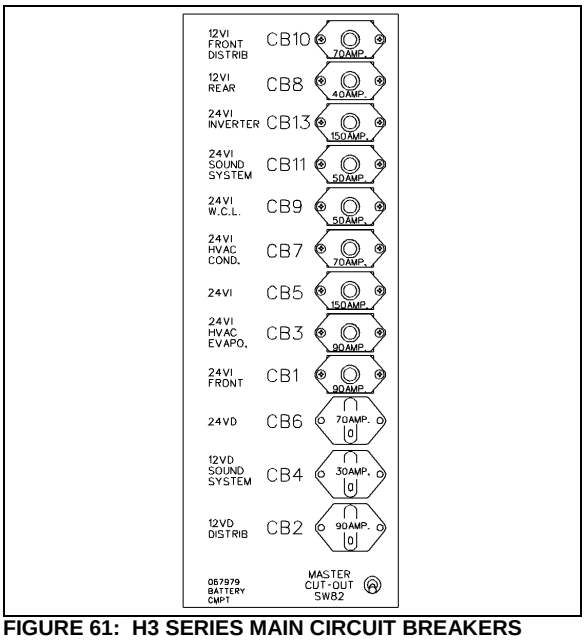

FIGURE 61: H3 SERIES MAIN CIRCUIT BREAKERS
06582A

6.1 AIR CIRCULATION IN DRIVER'S AREA

Fresh air is taken from behind the R.H. side headlights assembly (H3 series) or from a plenum underneath the front service compartment (X3 Series) and enters the mixing box through a ON/OFF damper. Return air is taken through the right console into the mixing box (Figure 69). Mixed air goes through cooling and heating coils, fans and discharge ducts.

Both right and left discharge ducts defrost one half of the windshield. The driver can also divert some air flow to the console, from which he can

direct air to his knees and/or upper body with adjustable HVAC air registers and to his feet with the appropriate button (see FIGURE 62 and Owner's or Operator's manual).

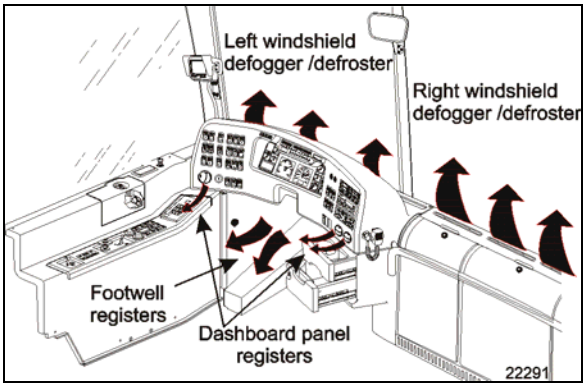

FIGURE 62: DRIVER'S UNIT AIR CIRCULATION

An additional air is located in the stepwell for step de-icing (Figure 2 & Figure 5). This air flow is supplied by the passengers' air ducting system.

X3 coaches are also equipped with a defogger/defroster system in the upper windshield section. Similar system is optional on H3 coaches.

6.2 AIR CIRCULATION IN PASSENGER'S AREA

Fresh air enters from the left side of vehicle through a damper located:

- H3 Series - Inside the air intake duct at the left of the evaporator compartment.
- X3 Series - On the evaporator compartment door (Figure 63).

The damper can be fully opened for normal operation or partially closed for extreme weather or highly polluted areas. The recirculation REC button is located on the HVAC control unit. Press down the button to partially close the fresh air damper (refer to the Owner's or Operator's Manual for more details).

MAINTENANCE

Passenger's area fresh air intake filter (X3 Series only)

Clean or replace filter at the intervals specified by the Lubrication And Servicing Schedule in Section 24: LUBRICATION & SERVICING.

To clean filter, back flush with water or soapy water, then dry with air.

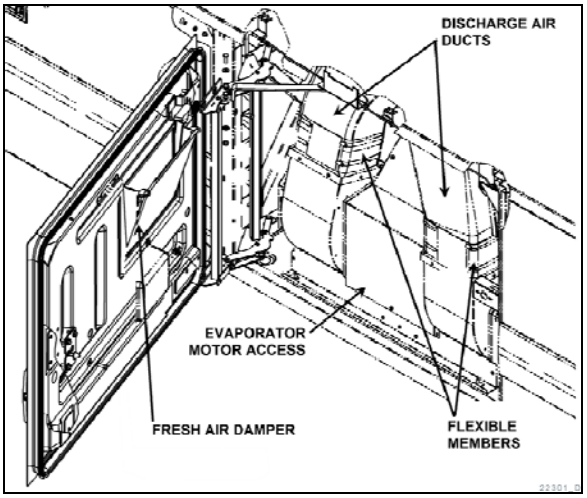

FIGURE 63: X3 SERIES PASSENGERS' AREA FRESH AIR DAMPER

NOTE

Opening the entrance door also partially closes the fresh air damper.

Return air is drawn through:

- H3 coaches - the first entrance step, last entrance step riser and from the lower section of the floor ducts in two locations: one in the rear section of vehicle and the other in the front section of vehicle on the L.H. side (Figure 2).
- X3 coaches - Return air is drawn from inside the vehicle through the register duct located on L.H. side of vehicle (Figure 5).

A double blower fan unit, which is activated by the evaporator motor, draws mixed air through an air filter, cooling and heating coils, then forces this air in the ventilation ducts (upper section) along the walls, and finally exhausts it at the bottom of the windows.

The coaches are equipped with an overhead compartment ventilation system equipped with adjustable registers in the passenger's overhead console to control air flow. Return air is drawn just below the middle side windows through an air filter into the overhead compartment fan; discharge air is fed to the rotating registers through the ventilation duct (Figure 64).

The lavatory ventilator found on coaches acts as the main exhaust for the whole vehicle, eliminates odors, and finally heats or cools the lavatory with the vehicle's ambient air.

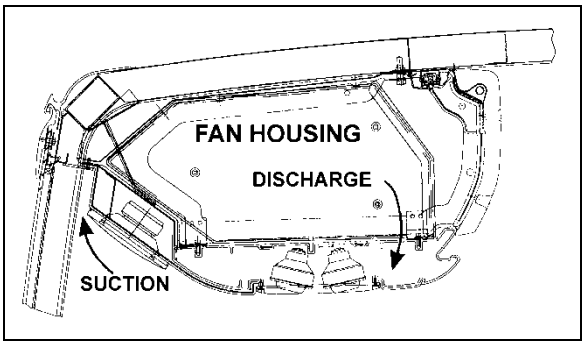

FIGURE 64: OVERHEAD COMPARTMENT VENTILATION SYSTEM 22211

6.3 HVAC SYSTEM OPERATION

To operate the HVAC system when the vehicle is stationary, engine should run at fast idle. During operation of the HVAC system, windows should be kept closed and door not left open longer than necessary. In order to prevent battery discharge, the HVAC system will not operate if the battery voltage drops below 24 volts.

The vehicle is divided into two areas:

- Driver's area (driver's HVAC unit).
- Passengers' area (passengers' HVAC unit).

The A/C compressor starts automatically when the two following conditions are satisfied:

1. The outside temperature is above 32°F (0°C).
2. The passengers' area temperature is within 7° (4°C) of the set point or higher (if set point is 68°F for example, return air temperature must be above 61°F, at this moment, enough heat is available from the engine to warm up the area while the air conditioning will remove moisture in air and prevent fogging up of the windows).

NOTE
Upon starting, if the outside temperature is above 32°F (0°C) and then drops below 32°F (0°C), the compressor will keep running up to a temperature of 15°F (-9°C) to prevent fogging up of the windows.

NOTE
To perform a test of the driver's section windshield defroster, it is possible to run the system without running the engine.

6.3.1 Control Unit

The temperature control in the driver's area is provided directly by the DRIVER control on the L.H. side of the HVAC control unit.

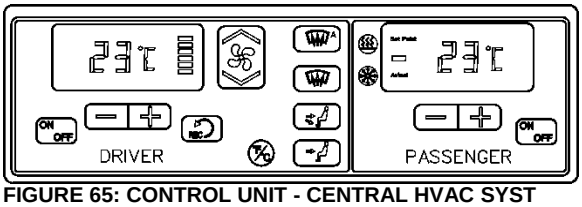

FIGURE 65: CONTROL UNIT - CENTRAL HVAC SYST 22276

The driver's unit piping is paralleled with the passenger's unit piping. Both units use the same refrigerant and coolant, and are linked to the same condenser and compressor, even if they are individually controlled. It requires engagement of the A/C compressor magnetic clutch; consequently, the driver's unit cannot be operated alone in the air conditioning mode.

NOTE
The driver's HVAC unit turns on automatically at starting of the engine (multiplex receives the "engine running" signal) when the multiplex system receives an "engine running" signal.

The PASSENGER control on the R.H side of the HVAC control unit enables the selection of the temperature in the passenger's section.

Temperature control is provided in conjunction with a thermistor sensor located inside return duct, on L.H. side of vehicle (Figure 2, Figure 5).

The flow of hot water to the passenger's unit heater core is controlled by the solenoid pilot pneumatic hot water valve which varies the cycling rate depending on selected temperature. A red LED indicator, located on the HVAC control unit, illuminates when the heating mode is one. A green LED indicator illuminates when compressor clutch is in operation.

NOTE
It is not uncommon for both the red Heat LED and the green AC LED to be illuminated at the same time. This indicates that the temperature control is requesting heat and the HVAC control is calling for compressor operation for dehumidification.

6.3.2 Overhead Compartment Unit

Optional A/C evaporator coils may be added to both overhead compartment air systems. This

air conditioning unit permits a wider temperature range in the passenger's area.

6.4 HEATING

The schematic of FIGURE 3 shows the central HVAC system heating arrangement.

On coaches, in addition to the normal heating provided by the engine, an optional preheating system (104,000 Btu/hr) may have been installed above the rear wheelhousing on the L.H. side.

6.4.1 Driver's Unit Hot Water Pneumatic Valve

The flow of hot water to the driver's unit heater core is controlled by a normally-open (NO) pneumatic valve like. The valve, located at the ceiling of the spare wheel compartment (Figure 66), is designed so that the pilot solenoid valve, which is part of the assembly, opens and closes a port which directs air pressure to the actuator casing, thereby opening or closing the valve.

When the vehicle is operating without electrical supply to the pilot solenoid valve, no air pressure is admitted to the actuator casing, the cylinder spring pushes up against the cylinder, thereby keeping the water valve open.

Air pressure at port + 24-V signal at coil = valve closed

The driver's unit hot water valve requires a minimum amount of maintenance. The valve should be free of dirt sediment that might interfere with its operation. No other maintenance is needed unless a malfunction occurs.

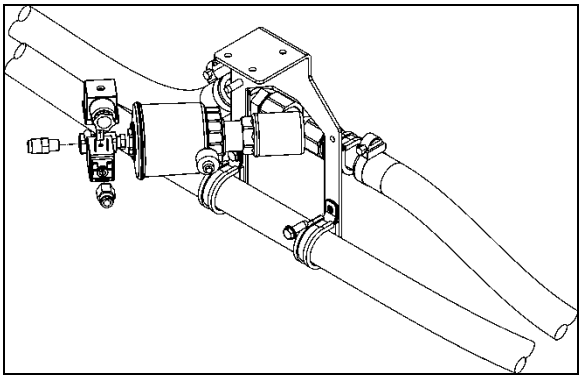

FIGURE 66: DRIVER'S UNIT HOT WATER PNEUMATIC VALVE ASSEMBLY

6.4.2 Passenger's Unit Hot Water Pneumatic Valve

The flow of hot water to the vehicle's central heater core is controlled by a normally-open NO 3-way pneumatic water valve assembly (Figure 67). The valve, located in the evaporator compartment, is designed so that the pilot solenoid valve, which is part of the assembly, opens and closes a port which directs air pressure to the actuator casing, thereby opening or closing the valve.

When the vehicle is operating without electrical power to the pilot solenoid valve, no air pressure is admitted to the actuator casing, the cylinder spring pushes up against the cylinder, thereby keeping the water valve open.

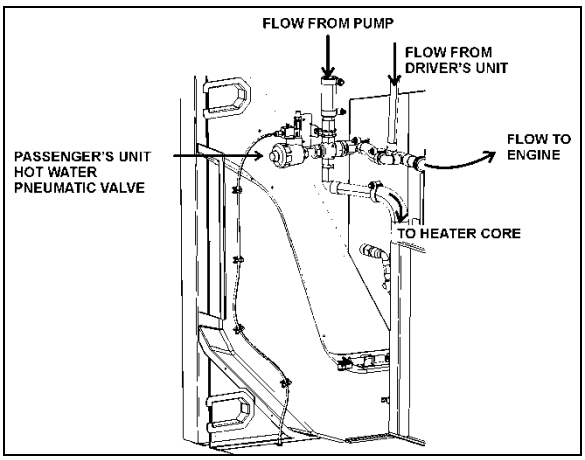

FIGURE 67: PASSENGER'S UNIT PNEUMATIC HOT WATER VALVE ASSEMBLY 22240

6.4.3 Draining Heating System

To drain the entire system, refer to SECTION 05 COOLING SYSTEM. If only the driver's unit heater core or passenger's unit heater core must be drained, refer to the following instructions.

<u>Draining Driver's Unit Heater Core</u>

1. Stop engine and allow engine coolant to cool.
2. Locate the normally open hot water pneumatic valve on the ceiling of the spare wheel compartment (Figure 66), disconnect its wiring connector, and then connect a 24-volt external power source, using jumper cables, to close valve.
3. Close the hot water lines shut-off valves located next the engine on street side (see Figure 72 or Figure 73).

WARNING

Before proceeding with the following steps, check that coolant has cooled down.

3. Loosen hose clamp, install an appropriate container to recover coolant, and disconnect silicone hose from hot water pneumatic valve.
4. From inside of vehicle, remove the two finishing panels in front of unit. Remove the three screws fixing the unit front panel. Open the purge valve located inside the driver's unit (Figure 69). If present, open the manual vent located inside the HVAC unit, on the driver's side (Figure 68) to ensure an efficient draining.

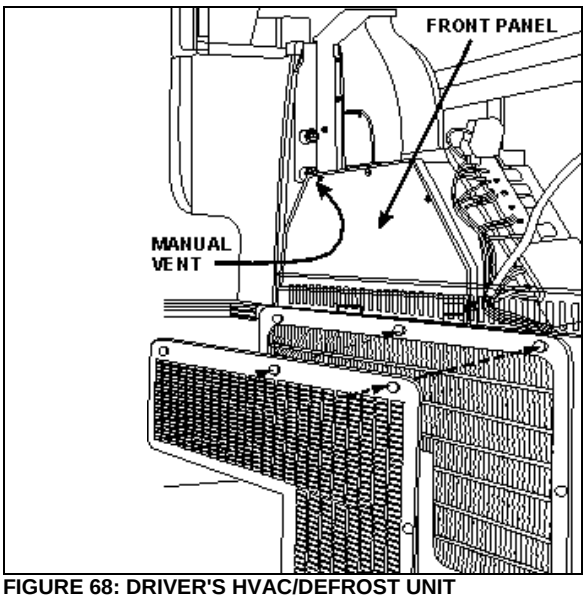

FIGURE 68: DRIVER'S HVAC/DEFROST UNIT

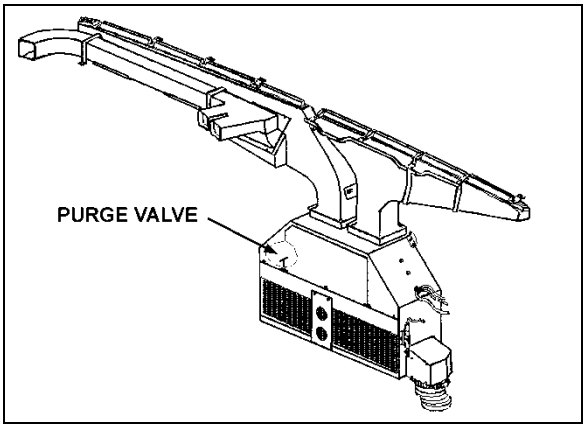

FIGURE 69: DRIVER'S UNIT AIR MIXING BOX 22171PV

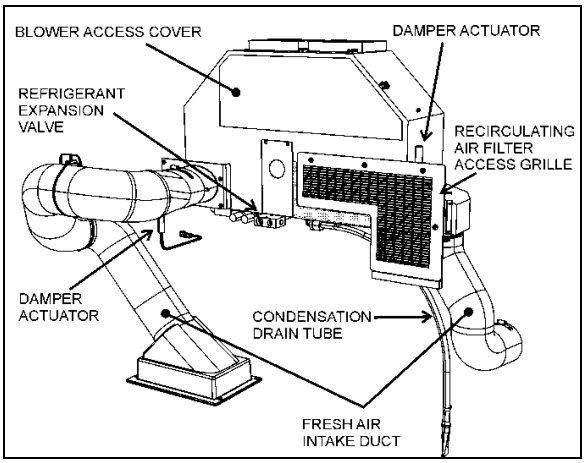

FIGURE 70: DRIVER'S HVAC UNIT

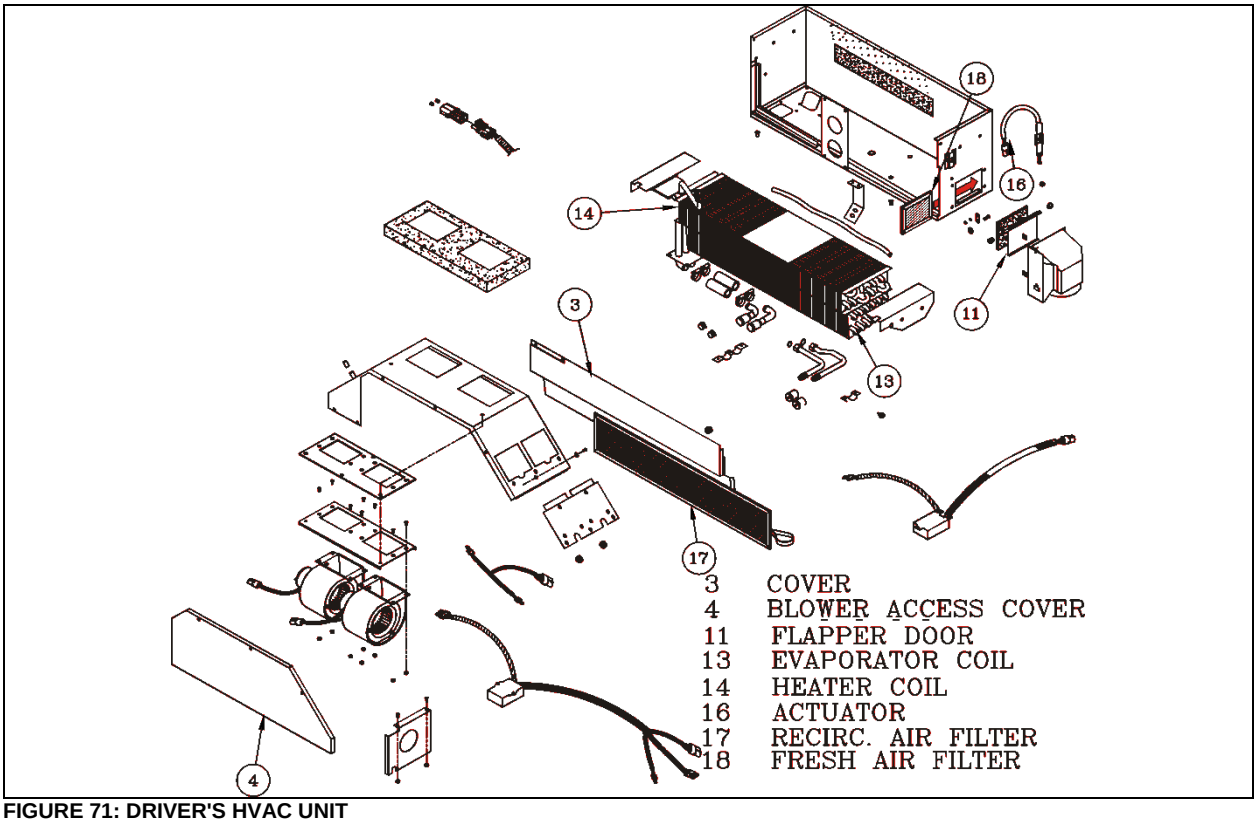

FIGURE 71: DRIVER'S HVAC UNIT

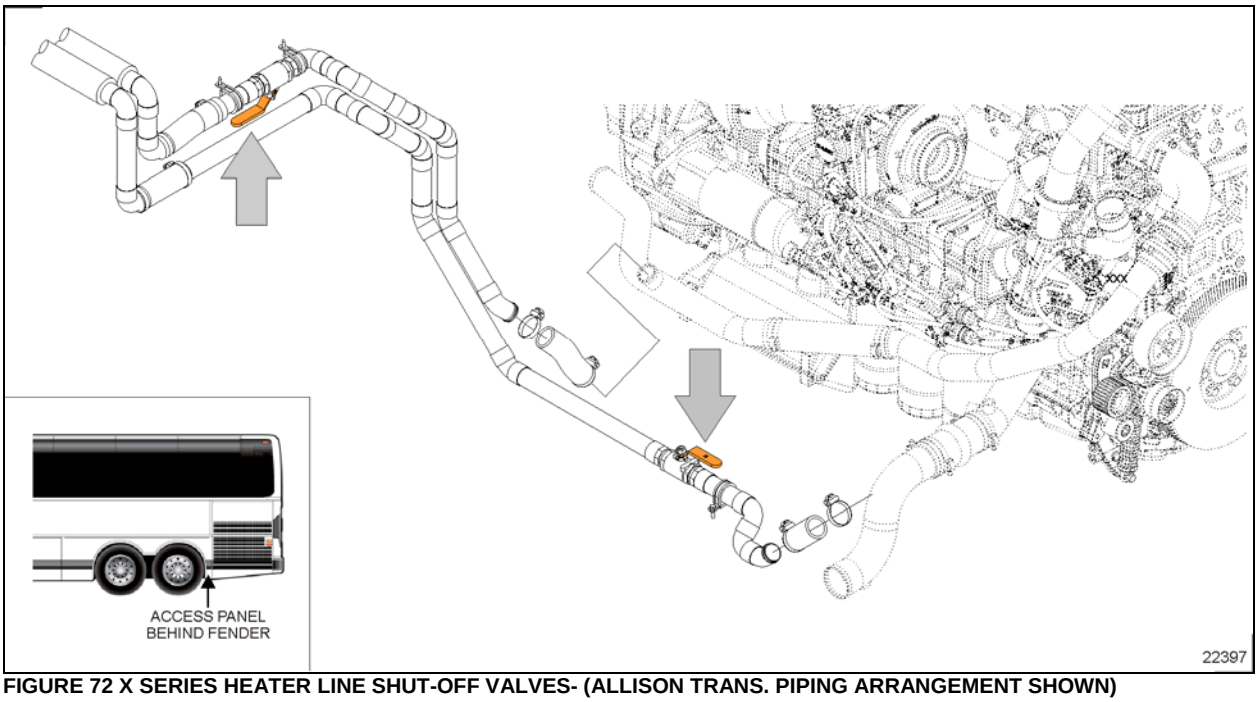

FIGURE 72 X SERIES HEATER LINE SHUT-OFF VALVES- (ALLISON TRANS. PIPING ARRANGEMENT SHOWN)

Draining Passenger's Unit Heater Core

1. Stop engine and allow engine coolant to cool.
2. Close both heater line shutoff valves (Figure 72 or Figure 73). One is located in the engine compartment, lower road side, near the radiator while the other one is located behind the L.H. hinged rear fender near the preheater.
3. Open the evaporator compartment door.

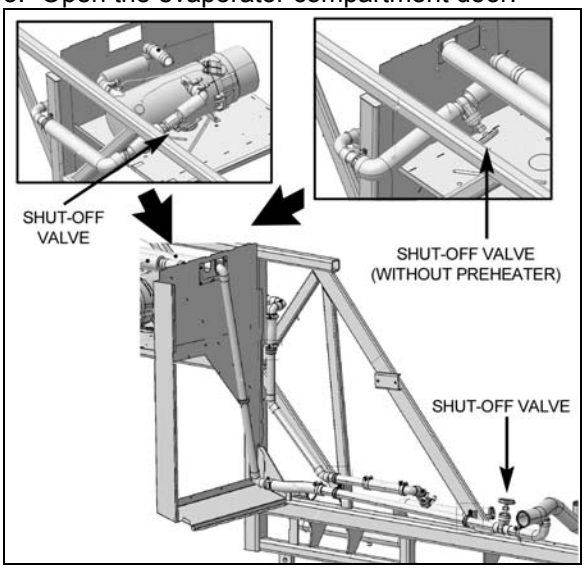

FIGURE 73: H3 SERIES HEATER LINE SHUTOFF VALVES 05144

WARNING

Before proceeding with the following step, check that coolant has cooled down.

4. Open drain cock in bottom of heater core (Figure 74) you can unfasten a hose connection on top of heater core in order to allow air to enter while draining. The main heater core drain cock is located in the evaporator compartment. To access the valve, open baggage compartment door located in front of the evaporator compartment (L.H. side). Open the evaporator compartment access panel.

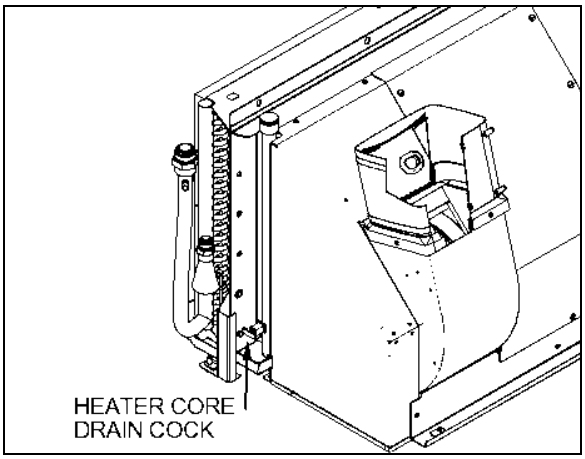

FIGURE 74: HEATER CORE DRAIN COCK LOCATION

6.4.4 Filling Heating System

1. Ensure that the driver's unit heater core purge valve and the passenger's unit heater core drain cock are closed.
2. Open the surge tank filler cap and slowly fill the tank to top of sight glass.
3. After initial filling, the hot water shutoff valves should be open and the water circulating pump should be energized to assist in circulating coolant through the heating system. To perform this operation, start the engine, switch on the HVAC control unit, both driver and passenger sections, and set temperature to their maximum positions in order to request the heating mode in each of these sections.
4. When coolant level drops below the surge tank sight glass, slowly fill the tank to top of the sight glass.
5. If vehicle is equipped with a windshield upper section defroster, open front baggage compartment R.H. side door. Locate circulating pump on top of front wheelhousing, momentarily pinch the hose located between the circulating pump suction and the defroster outlet connector to ensure windshield upper section defroster complete filling.
6. Once the level has been stabilized, replace cap

6.4.5 Bleeding Heating System

Whenever the heating system has been drained and refilled, or the system has run low on coolant and coolant has been added, it is necessary to bleed air from heating system.

Locate the purge valve illustrated in Figure 69 & Figure 74, and open them momentarily until no air escapes from the lines. If present, open the manual vent located inside the HVAC unit, on the driver's side (Figure 68).

NOTE
In test mode (see paragraph 5.4 TEST MODE FOR SWITCHES AND SENSORS), with the parking brake applied and the passenger set point set to a value higher than 64°F (18°C), the hot water circulating pump is not set to OFF as it would normally do when the outside temperature gets above 50°F (10°C). This feature is useful when working on the heating system to remove air pockets trapped in the system.

6.5 COOLING

The central system is equipped with 4-cylinder 4NFCY Bitzer compressor with an air conditioning capacity of 7½ tons. The receiver tank and filter-dryer are mounted inside the condenser compartment.

The schematics of FIGURE 4 and FIGURE 7 show the central HVAC system's cooling function arrangement.

6.5.1 Refrigeration Cycle

Refrigeration may be defined as the transfer of heat from a place where it is not wanted to a place where it is unobjectionable. The air conditioning system used is the "closed" type using R134a refrigerant.

1. The refrigerant flowing to the compressor is compressed to high pressure and reaches a temperature higher than the surrounding air. It is passed through the air-cooled fins and tubes of the condenser causing the hot, high pressure gas to be condensed into a liquid form.
2. The liquid refrigerant flows to the receiver tank, then back to the condenser sub-cooler. It leaves the condenser and passes through a filter-dryer where moisture, acids and dirt are removed and then through a moisture indicator which indicates if any moisture is present in the system.
3. By its own pressure, the liquid refrigerant flows through a thermal expansion valve where the pressure drop causes the refrigerant to vaporize in a vapor-liquid state at a low temperature pressure.
4. The cold low pressure refrigerant passes through the passenger's and driver's unit evaporator coils which absorb heat from the air passing over the fins and tubes, and changes into gas. In this form, the refrigerant is drawn into the compressor to repeat the air conditioning cycle.
5. The success of the air conditioning system depends on retaining the conditioned air within the vehicle. All windows and intake vents should be closed. An opening of approximately 8 in^2 (5162 mm^2) could easily neutralize the total capacity of the system.
6. Other causes of inadequate cooling are dirty coils or filter. Dirt acts as insulation and is also serves as a restriction to the air flow.
7. The refrigeration load is not constant and varies. It is also affected by outside temperature, relative humidity, passenger load, compressor speed, the number of stops, etc.

The compressor will load depending on operating conditions.

6.5.2 Refrigerant

The A/C system of this vehicle has been designed to use R134a refrigerant as a medium. Regardless of the brand, only R134a must be used in this system. The chemical name for this refrigerant is 1,1,1,2-Tetrafluoroethane.

WARNING
Refrigerant in itself is nonflammable, but if it comes in contact with an open flame, it will decompose.

<u>Procurement</u>

Refrigerant is shipped and stored in metal cylinders. It is serviced in 30 and 100 pound cylinders.

Approximately 24 lbs are needed in the Central HVAC system plus an additional 2 lbs will be needed for the overhead compartment A/C system if equipped.

For vehicles equipped with the Small HVAC System, approximately 4 lbs of refrigerant are needed.

Refrigerant charge (Approximate)

Central A/C system:	*24 lbs*
Small A/C system:	*4 lbs*
Overhead comp. A/C system:	*2 lbs*

It will be impossible to draw the entire refrigerant out of the cylinder. However, the use of warm water or heating blanket when charging the system will assure the extraction of a maximum amount of refrigerant from the cylinder.

Precautions in Handling Refrigerant

1. Do not leave refrigerant cylinder uncapped.
2. Do not subject cylinder to high temperatures, do not weld or steam clean near system or cylinder.
3. Do not fill cylinder to more than 80% liquid full to allow for refrigerant expansion.
4. Do not discharge vapor into an area where a flame is exposed.
5. Do not expose the eyes to liquid refrigerant.

All refrigerant cylinders are shipped with a heavy metal screw cap. The purpose of the cap is to protect the valve and safety plug from damage. It is a good practice to replace the cap after each use of the cylinder for the same reason. If the cylinder is exposed to the sun's radiant heat pressure increase resulting may cause release of the safety plug or the cylinder may burst.

For the same reason, the refrigerant cylinder should never be subjected to excessive temperature when charging a system. The refrigerant cylinder should be heated for charging purposes by placing it in 125°F (52°C) water. Never heat above 125°F (52°C) or use a blowtorch, radiator, or stove to heat the cylinder.

Welding or steam cleaning on or near any refrigerant line or components of the A/C system could build up dangerous and damaging pressures in the system.

If a small cylinder is ever filled from a large one, never fill the cylinder completely. Space should always be allowed above the liquid for expansion. Weighing cylinders before and during the transfer will determine the fullness of the cylinders.

WARNING

One of the most important precautions when handling refrigerant consists in protecting the eyes. Any liquid refrigerant which may accidentally escape is approximately -40°F (-40°C). If refrigerant comes in contact with the eyes, serious injury could result. Always wear goggles to protect the eyes when opening refrigerant connections.

Treatment in Case of Injury

If liquid refrigerant comes in contact with the skin, treat the injury as if the skin was frost-bitten or frozen. If liquid refrigerant comes in contact with the eyes, consult an eye specialist or doctor immediately. Give the following first aid treatment:

1. Do not rub the eyes. Splash eyes with cold water to gradually bring the temperature above the freezing point.
2. Apply drops of sterile mineral oil (obtainable at any drugstore) in the eyes to reduce the possibility of infection. The mineral oil will also help in absorbing the refrigerant.

Precautions in Handling Refrigerant Lines

1. All metal tubing lines should be free of kinks, because of the resulting restrictions on the flow of refrigerant. A single kink can greatly reduce the refrigeration capacity of the entire system.
2. The flexible hose lines should never be allowed to come within a distance of 2-½" (6,3 cm) from the exhaust manifold.
3. Use only sealed lines from parts stock.
4. When disconnecting any fitting in the refrigeration system, the system must first be discharged of all refrigerant. However, proceed very cautiously, regardless of gauge readings. If there happens to be liquid refrigerant in the line, disconnect fittings very slowly, keeping face and hands away so that no injury can occur. If pressure is noticed when fitting is loosened, allow it to bleed off very slowly.

WARNING

Always wear safety goggles and gloves when opening refrigerant lines.

5. In the event that any line is opened to the atmosphere, it should be immediately capped to prevent entrance of moisture and dirt.
6. The use of the proper wrenches when making connections on O-ring fittings is important. The use of improper wrenches may damage the connection. The opposing fitting should always be backed up with a wrench to prevent distortion of connection lines or components. When connecting the flexible hose connections, it is important that the swaged fitting and the flare nut, as well as the coupling to which it is attached, be held at the same time using three different wrenches to prevent turning the fitting and damaging the ground seat.
7. The O-rings and seats must be in perfect condition. The slightest burr or piece of dirt may cause a leak.
8. **O-rings and gaskets should be coated with refrigeration oil** and installed on the line before the line is inserted into the fitting to prevent damaging the O-ring. If leaks are encountered at the couplings or connectors, no attempt should be made to correct the leaks by tightening the connections beyond the recommended torque. The O-rings are designed to seal at the specified torque and overtightening the connection does not result in a satisfactory and permanently sealed connection. The connection must be disassembled and the cause of the leak (damaged O-ring, defective lines, etc.) corrected. Use new O-ring.

6.5.3 Refrigerant System Clean-out After Compressor Failure

Although the vast majority of reciprocating refrigerant compressors manufactured today are extremely reliable, a small percentage do fail. These failures usually result in minor or extensive system contamination depending on the severity of the failure. When an open type compressor becomes damaged internally, this provokes small particles of bearings, steel, brass, copper, and aluminum and, in severe cases, carbonized oil, which could contaminate the system. To prevent repeated failures, the problem which caused the failure should be corrected, and depending upon the severity of the failure, the system should be thoroughly cleaned out using one of the cleanout procedures mentioned.

Determining Severity of Failure

The severity of compressor failure can be categorized as minor or major. A failure is considered minor when the contamination is limited to the compressor with little or no system contamination. A major failure, or burnout, results in extensive system contamination as well as compressor damage. Extensive system contamination can be determined by withdrawing a small sample of compressor oil and checking its color, odor and acidity. A Virginia Chemical "TKO" one step acid test kit is one of several compressor oil test kits that may be used. A high acid content would indicate a major failure or burnout. A small amount of refrigerant gas may be discharged. A characteristic burned odor would also indicate severe system contamination.

Clean-out after Minor Compressor Failure

1. Be sure to correct the problem which caused the failure.
2. Change liquid line filter-dryer.
3. Run the unit for 2 hours on high speed cool only.
4. Check compressor oil level to ensure compressor is not overcharged with oil. Sometimes a significant amount of oil is pumped out of the compressor to other parts of the system when a compressor fails. This oil will return to the replacement compressor when it is started, causing an overcharge of oil in the sump of the replacement compressor. In this case, it is important that the oil level be adjusted to the proper level.
5. Withdraw a sample of the compressor oil and check its color, odor, and acidity, using instructions supplied above. If the oil is contaminated, change the oil and filter-dryer, and repeat the procedure until the system is clean.
6.

Clean-out After Major Compressor Failure

1. Reclaim the refrigerant into a refrigerant bottle through a filter-dryer to filter out contaminants.
2. Remove the failed compressor and repair it if possible.
3. Install new or repaired compressor.
4. Change the filter-dryer using prescribed method.
5. Circulate clean R-134a with the reclaimer to clean out many of the contaminants collected in the coil valves, TXV (Thermal Expansion Valve), solenoid valves, check valves, and any other mechanical component that may have collected contaminants.
6. Evacuate and charge the system normally.
7. Run the unit for 8 hours and monitor the pressure drop across the filter-dryer. Also check the liquid line dryer for signs of restriction. If the pressure drop across the filter-dryer exceeds 12 to 14 psig (82,75 to 96,5 kPa) with a 40°F (5°C) evaporator coil temperature, stop the unit and change the liquid line and suction line filter-dryer. After 4 or 5 hours of operation, stop the unit and replace the filter-dryer.
8. After 8 hours of operation, stop the unit and remove a sample of the compressor oil and check its color, odor, and acidity, using instructions supplied above. If the oil is contaminated, replace the oil and repeat step 7. If the oil is not contaminated, change the filter-dryer again and replace the moisture-liquid indicator.
9. After approximately 7 days of operation, recheck the compressor oil for cleanliness and acidity.

6.5.4 Pumping Down

This procedure is intended to reduce refrigerant loss, on the central system only, by isolating it in the compressor and the receiver tank, as well as in their connecting line, in order to carry out repairs on other sections of the air conditioning system (lines and components).

NOTE

Once this pull down procedure has been properly done, any component from the outlet hose on the receiver tank, the filter-dryer, the liquid solenoid valves, the evaporators, the expansion valves, and all lines associated with them can be serviced, ***then properly evacuated.***

It must be noted that there is STILL refrigerant under pressure in the compressor, the discharge lines, condenser, and receiver tank and that these items cannot be serviced. To service these items, it is required to recover the refrigerant using a recovery unit.

CAUTION

The filter-dryer should be changed each time a line in the system is opened.

NOTE

Before attempting any repair between compressor and receiver tank, use a recovery unit to remove refrigerant from the system.

WARNING

To prevent any injury, when air conditioning system must be opened, refer to previous paragraph “Precautions In Handling Refrigerant” to prevent any injury.

NOTE

For this procedure to be done properly, it is assumed the proper amount of refrigerant is in the refrigeration system. If there is any doubt, use a recovery unit to recover and weight the amount of refrigerant in the system.

NOTE

On vehicles equipped with small HVAC system, refer to “ICE TM-16HD Compressor Service Manual".

Procedure

1. Energize driver’s unit and passengers’ unit (main HVAC system) section liquid solenoid valve. To do so, connect male and female

connector housings of C24 together for the passengers' area (found on the HVAC module in evaporator compartment) and C44 for the driver's area (located on the ceiling of the spare wheel compartment). During normal use, both male and female housings of connector C24 and C44 are kept unplugged.

CAUTION

Connectors C24 & C44 must be disconnected and their caps reinstalled after this procedure. Leaving them connected will keep the driver's, passengers and overhead compartment liquid solenoid valves open, and result in battery draining if the vehicle remains unused for several days.

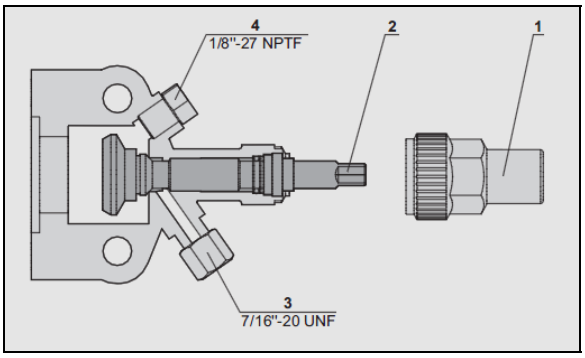

FIGURE 75: COMPRESSOR SHUT-OFF VALVE BACKSEATED POSITION (NORMAL OPERATING POSITION)

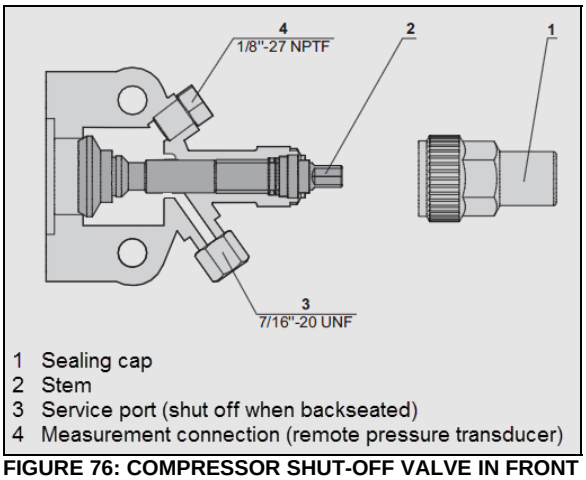

FIGURE 76: COMPRESSOR SHUT-OFF VALVE IN FRONT SEATED POSITION

2. Run the system for 10 minutes and then shut it off.

3. Close (frontseat) the receiver tank outlet shut-off valve by turning the stem clockwise (Figure 42 and Figure 76).

   MAX TORQUE: 21 lb-ft (28 Nm)

4. Backseat the compressor suction shut-off valve (FIGURE 75).

   MAX TORQUE: 12 lb-ft (16 Nm)

5. Install an appropriate pressure gauge set on the service port and then turn the shut-off valve forward ¼ turn more or less until a visual check of the suction pressure is possible.

6. Disconnect the low pressure transducer. The multiplex system will establish a default value of 34 psig and this will allow pulling down the A/C compressor to 0 psig. **Note: the low pressure transducer must be reconnected after the pumping down operation is complete.**

7. Run the A/C compressor until suction pressure is pulled down to 0 psig.

8. Disconnect the compressor clutch to stop the compressor from pulling the system into a vacuum. Vacuum is not required. The pressure will probably slowly increase on the suction side. When it reaches 10 psig, reconnect the clutch and repeat the pull down to pull down this residual pressure. This process might need to be repeated a couple of times until the suction pressure drops and remains to 0 psig.

9. Stop the compressor.

10. Close (frontseat) the suction shut-off valve on the compressor (Figure 76).

    MAX TORQUE: 21 lb-ft (28 Nm)

11. At this point, C24 can be disconnected to isolate the section of the system located between the receiver tank outlet shut-off valve and the passengers' unit liquid solenoid valve. Doing so would be useful to perform replacement of the filter-dryer for example.

NOTE
During this operation, care must be taken not to fill the receiver tank over the upper sight glass. If so, stop process immediately. Always allow refrigerant piping and units to warm up to the ambient air temperature before opening system or sweating will take place inside the lines.

6.5.5 Adding Vapor State Refrigerant

Addition of vapor state refrigerant is carried-out to compensate for hose permeation and shaft seal losses over a long period and is done from the suction side while compressor is in operation.

A typical sign of refrigerant low charge would be A/C lower performance experienced by the user.

Perform the usual leak inspection and correct any leaks before adding refrigerant.

Verification

Perform the following verifications:

1- A vehicle stopped for more than 4 hours should show the lower receiver tank sight glass full at room temperature or with some level if ambient temperature is high. This method is less accurate when ambient temperature gets high.

2- With the AC on for at least 10 minutes, the moisture indicator sight glass (FIGURE 77) should be clear, not milky, without bubbles in the stream of refrigerant. Bubbles in the moisture indicator sight glass are sign of refrigerant low charge. The filter-dryer nearby should be near constant temperature, less than 5°F differential between inlet and outlet. A partially blocked filter will make some flash gas and give a "milky" sight glass.

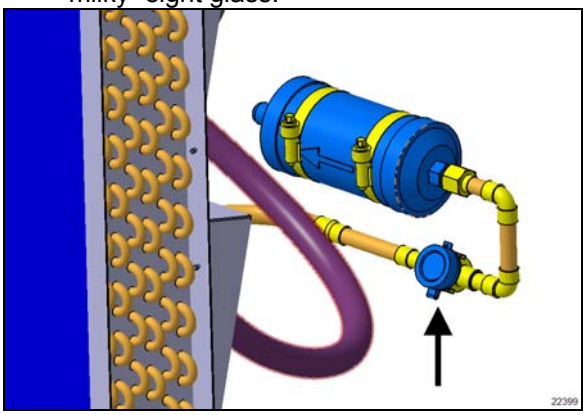

FIGURE 77: MOISTURE INDICATOR SIGHT GLASS

3- At fast idle, the high side pressure should be near the following calculation: add 30° F to the ambient temperature in Fahrenheit. In the refrigerant chart (see paragraph 5.8), find this temperature and the corresponding saturation pressure and add 10 psi for the pressure drop between compressor and condenser.

Calculation example:

At 70°F outside, add 30°F. In the chart (paragraph 5.8 **), find the pressure value for a temperature of 100°F. For 134a refrigerant gas, you will find a value of 124 psi. Add 10 psi to this value for the compressor to condenser line, this result gives 134 psi. So a high side pressure value between 129 to 139 psi should be OK.**

Refrigerant addition

NOTE
Use a bottle that is more than half full.
Always charge the system with the cylinder upright and the valve on top to avoid drawing liquid out of the cylinder.

1. Install a heated refrigerant bottle at the back of the vehicle, on a scale, straight up.

   Refer to section "Precautions in Handling Refrigerant" for the proper heating method.

2. Connect the yellow hose of your manifold gage set to the red (vapor) valve on the bottle. Connect the blue valve of the gage set on the suction shut-off valve service port of the compressor. Connect the red valve of the gage set to the discharge shut-off valve service port. Hoses should be purged of air at installation (evacuated).

WARNING
Secure manifold gage hoses so they will not be damaged by engine belts and pulley.

3. Midseat the compressor suction and discharge shut-off valves.

4. In order to speed up the charging, unplug the unloader to keep all compressor cylinders active.

5. Let the door and hatches open and maybe open side windows to prevent cooling down the coach too rapidly. Preferably, the interior would be hot, at least over 68°F.

WARNING

If discharge pressure is above 100 psig, the condenser fans will be running. Keep hands clear of fans

6. Start engine.
7. Switch to fast idle for faster fill and battery protection.
8. Open the blue gage valve. The suction pressure should go up meaning the compressor is sucking from the tank also. If there is almost no pressure rise, the tank is too low or too cold.
9. Check the moisture indicator sight glass and the discharge pressure to meet the criteria described above.
10. When the sight glass gets clear, you can add some reserve, up to 2 pounds, as long as the high pressure does not move up.
11. When finished, close gage valves and bottle valve.
12. Before stopping the engine, check the compressor oil level and note it in the repair book as well as the amount of refrigerant added.
13. Shut down engine and backseat suction and discharge shut-off valves (FIGURE 75).

    MAX TORQUE: 12 lb-ft (16 Nm)
14. Remove gages and replace caps.
15. Perform a road test for final verification.

6.5.6 Charging System

When a system has been opened or if there are any questions about the air or moisture in the system, evacuate the system. **Charging of an evacuated system** may be accomplished by forcing liquid R-134a directly into the receiver tank. This may be accomplished by placing the refrigerant cylinder upside down on a scale with the valves at the bottom. This ensures that only liquid will enter the **receiver tank**.

When charging an empty system, weigh the amount of refrigerant put into the system. This will eliminate any possibility of overfilling.

A Central HVAC System nominal charge requires 24 pounds. If the vehicle is equipped with the overhead compartment A/C system, a full charge requires an additional 2 lbs.

After charging the system, it may be necessary to add refrigerant. Vapor state refrigerant addition will be done from the suction side of the compressor while the compressor is in operation.

1. Using connector C24 and C44, energize and open the liquid solenoid valves (driver's unit, passengers' unit and overhead compartment units). To do so, uncap and connect male and female connector housings of C24 together for the passengers' area (located on the HVAC module in evaporator compartment) or C44 for the driver's area (located on the ceiling of the spare wheel compartment).
2. Backseat (stem out) the two compressor shut-off valves (FIGURE 75).

   MAX TORQUE: 12 lb-ft (16 Nm)
3. Install A/C pressure gauges at the compressor shut-off valves service ports (item 4, FIGURE 75).
4. Midseat the two compressor shut-off valves.
5. Ensure that the two receiver shut-off valves are in backseated position (stem out).
6. Remove the cover cap from the service port on the receiver inlet shut-off valve (Figure 42).
7. Attach an evacuated charging hose (purged from air and moisture) to the R-134a tank.
8. Connect the evacuated charging hose to the service port on the receiver tank inlet shut-off valve.
9. Open the R-134a tank valve. The refrigerant supply tank should be kept warm to allow more refrigerant to be transferred into the system. Use a heating blanket for this matter.
10. Midseat the receiver inlet shut-off valve. The R-134a will now enter the system.
11. The proper charge of R-134a is 24 lbs, to this, add 2 lbs for overhead compartments A/C system. When the scale indicates this amount of charge, backseat the receiver valve and close the R-134a tank valve.
12. Disconnect the charging hose. Replace the cover caps.
13. Disconnect C24 & C44.
14. The system is now ready for operation.

CAUTION

The evacuation of the system must be made by authorized and qualified personnel only. Refer to local laws for R-134a recuperation.

6.6 LIQUID REFRIGERANT RECOVERY

Liquid recovery is performed the same way as standard vapor recovery except that liquid recovery will be done by connecting to the high side of the system. Recovering liquid is ideal for recovering large amounts of refrigerant.

1. Energize driver's unit and passengers' unit (main HVAC system) section liquid solenoid valve. To do so, connect male and female connector housings of C24 together for the passengers' area (located on the HVAC module in evaporator compartment) and C44 for the driver's area (located on the ceiling of the spare wheel compartment). During normal use, both male and female housings of connector C24 or C44 are kept unplugged.
2. Backseat (normal operating position) the compressor suction and discharge shut-off valves.

   MAX TORQUE: 12 lb-ft (16 Nm)
3. Connect manifold gauges on the service port and then turn the compressor shut-off valves forward just enough to enable a visual check of the suction and discharge pressure.
4. Make sure the receiver outlet shut-off valve is in backseated position (normal operating position). Connect the recovery unit hose to the receiver outlet shut-off valve service port (FIGURE 78).

FIGURE 78: RECOVERY UNIT CONNECTED TO RECEIVER SERVICE PORT

5. Perform the recovery of the refrigerant as prescribed by the recovery unit manufacturer.

6.7 EVACUATING SYSTEM

When A/C system has been opened or if there are any questions about the air or moisture in the system, evacuate the system.

Backseat (stem out) both compressor shut-off valves. Evacuate the entire system including compressor using a **vacuum pump** connected to the high and low pressure sides.

A steady vacuum (i.e. pressure does not rise within two hours) less than 0.02 psi (1.5 mbar) must be maintained once the vacuum pump is turned off.

CAUTION

The evacuation of the system must be made by authorized and qualified personnel only. Refer to local laws for R-134a recuperation.

1. Make sure both receiver tank shut-off valves are is the normal backseated position (stem turned out).
2. Clean the area around the compressor shut-off valves.
3. Remove the blue and red caps from the service ports on suction and discharge shut-off valves. Connect two hoses to the vacuum pump.
4. Mid seat the compressor suction and discharge shut-off valves.
5. Using connector C24 and C44, energize and open the liquid solenoid valves (driver's unit, passengers' unit and overhead compartment units). To do so, uncap and connect male and female connector housings of C24 together for the passengers' area (located on the HVAC module in evaporator compartment) or C44 for the driver's area (located on the ceiling of the spare wheel compartment).
6. Start the vacuum pump.
7. The pressure will drop to approximately 29 in-HG gauge vacuum.
8. Evacuate to a system pressure of 500 micron.

9. Shut down the vacuum pump. Validate that the vacuum holds. If the pressure rises, it indicates a leak.
10. Backseat the compressor shut-off valves by turning “out” all the way.
11. Remove the hoses.
12. Reinstall the red and blue caps at the suction and discharge shut-off valves service ports.
13. Disconnect C24 & C44.

7. SMALL HVAC SYSTEM

The small HVAC system is found only on motorhomes and has a much lower heating and air cooling capacity than the central system because it is designed to provide air conditioning to the driver’s area only.

7.1 SYSTEM CONFIGURATION H-SERIES

On H3-series vehicles, the compressor is installed away from the engine and uses a pneumatic belt tensioner.

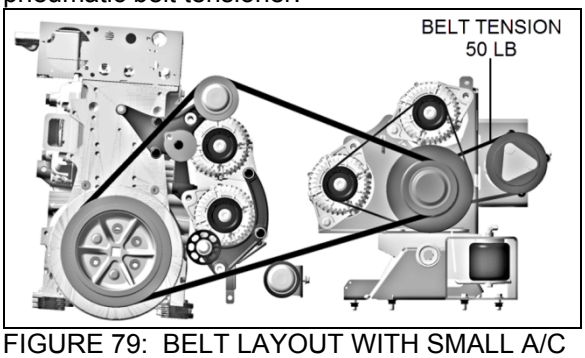

FIGURE 79: BELT LAYOUT WITH SMALL A/C COMPRESSOR h3-45 VIP 22380

In this configuration, the condenser is installed over the radiator and benefits from the existing airflow in this location. All the associated service ports and shut-off valves are close to the compressor.

7.2 SYSTEM CONFIGURATION X SERIES

On X-series vehicles, the compressor is installed on a support attached to the central A/C pedestal on the engine and uses an automatic belt tensioner.

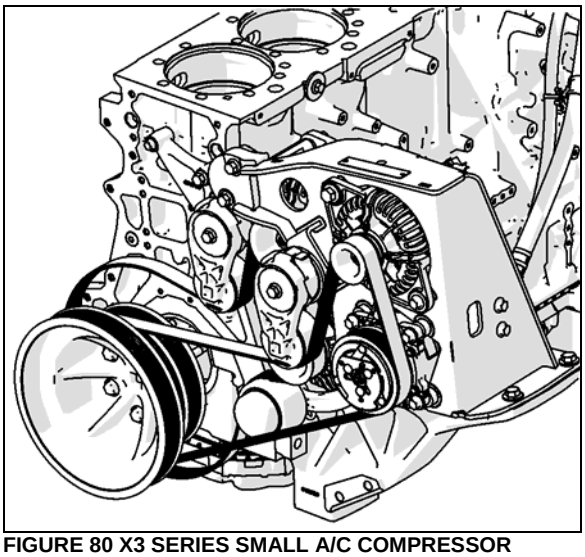

FIGURE 80 X3 SERIES SMALL A/C COMPRESSOR

In this configuration, the condenser is located in the 4th luggage compartment it has its own electric fan to provide the required cooling. All the associated service ports and shut-off valves are on top of the condenser frame.

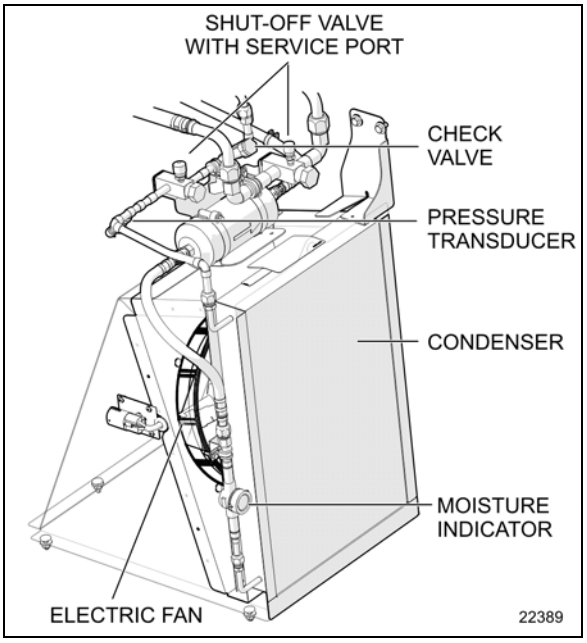

FIGURE 81: CONDENSER CONFIGURATION X3-45 VIP

7.3 AIR CIRCULATION

Fresh air is taken from behind the R.H. side headlights assembly (H3 series) or from a plenum underneath the front service compartment (X3 Series) and enters the mixing box through a damper. Return air is taken through the right console into the mixing box. Mixed air goes through cooling and heating coils, fans and discharge ducts.

Both right and left discharge ducts defrost one half of the windshield. The driver can also divert his air flow to the dashboard, from which he can direct vent to his upper body with adjustable HVAC register and to his feet with the appropriate button (see FIGURE 82 and Owner's manual).

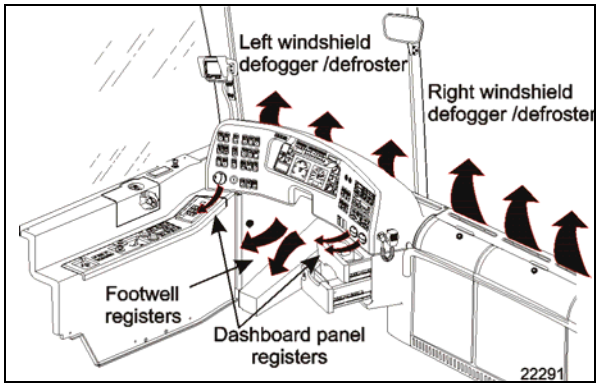

FIGURE 82: DRIVER'S UNIT AIR CIRCULATION

7.3.1 Auxiliary Unit

H3 VIP vehicles equipped with the small HVAC system are equipped with an auxiliary system that provides five additional registers. Three are located behind the driver's seat and the other two are located near the entrance door, at bottom of first lateral window. The auxiliary unit comes with cooling and heating coils, fan and discharge ducts.

7.4 SYSTEM OPERATION

7.4.1 Driver's Unit

The small HVAC system driver's unit is similar to the central HVAC system driver's unit, except that the circulating pump is located on the ceiling of the spare wheel compartment (Figure 9).

On H3 VIP series vehicles, an auxiliary unit is added in series on the return line of the small system, it increases the whole system heating capacity and gives the driver more options.

The temperature control in the driver's area is provided directly by the HVAC control unit mounted on the dashboard R.H. side.

NOTE
X3 Series - The driver's area air temperature sensor is located behind the grill of the R.H. side console.

NOTE
X3 Series - The outside air temperature sensor is located near the RH headlight.

7.4.2 Auxiliary Unit - H3 VIP Vehicles Only

The temperature control is provided by the small system HVAC control unit. The R.H. portion of the HVAC control unit enables to actuate the auxiliary unit and to regulate the fan speed.

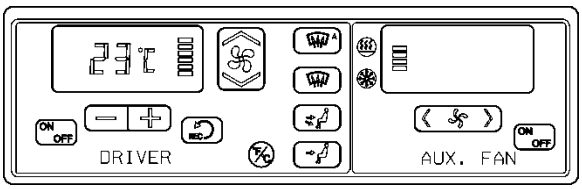

FIGURE 83: CONTROL UNIT - SMALL HVAC SYST. 22286

7.5 REFRIGERANT RECOVERY

The release of refrigerant into the atmosphere must be avoided. Whenever refrigerant is to be released from the air conditioning system, a refrigerant recovery unit must be used to recover the refrigerant. This refrigerant can then be recycled and reused, which is both environmentally safe and economical.

For complete system recovery, any of the High and Low service ports can be used. Energize liquid solenoid valve and measure the quantity of oil recovered. For the compressor only, use the service valve port and close the valves. The service valves open permits full flow of refrigerant to service port. Service valve closed permits flow of refrigerant from compressor to service port.

7.6 EVACUATING SYSTEM PRIOR ADDITION OF REFRIGERANT (DRIVER'S OR AUXILIARY SYSTEM)

When a system has been opened for repairs, change the filter-dryer and evacuate the system. Use the high-pressure service port and low-pressure port. It would be good practice to open the solenoid valve.

1. Connect two hoses equipped with a micron gauge between the high-pressure service port, the low-pressure service port and the vacuum pump.
2. With the unit service valves open and the vacuum pump valves open, start the pump and draw the manifold and hoses into a very deep vacuum (700 microns).
3. Close manifold valve

4. Shut down the vacuum pump.
5. Check to insure that vacuum holds. (If the pressure continues to rise, it indicates a leak or moisture in the system).
6. Charge the system with the proper amount of refrigerant through the service port near the check valve using recommended charging procedures.
7. Remove the hoses.

7.7 OIL ADDITION

The chart below shows the approximate amount of oil to be added to the system when replacing a component.

Component replaced	Typical amount of oil
Evaporator	50 ml (1.7 ozs)
Condenser	30 ml (1.0 ozs)
Filter-Dryer	10 ml (0.3 ozs)

The amount of oil recovered with the refrigerant recovery should be added at the same time.

7.8 COMPRESSOR OIL CONTAMINATION

Unlike engine oil, no cleaning agent is added to the compressor oil. Even if the compressor is run for a long time, the oil never becomes turbid as long as there is nothing wrong with the compressor or its method of use. Inspect the extracted oil for any of the following conditions:

- Dirt in the oil.
- Change to a varnish color.
- Presence of foreign substance, metal shavings, etc. in the oil. When the oil extracted from the compressor is as described above, replace the oil as follows:
    1. Clean the interior of the system with approved method.
    2. Replace the filter-dryer.
    3. Supply with new oil as specified in small Compressor Service Manual included at the end of this section

7.9 OIL RETURN OPERATION

There is a close affinity between oil and refrigerant. During normal operation, part of the oil recirculates with the refrigerant in the system. Therefore, when checking the amount of oil in the system or replacing any system component, the compressor must be run in advance to ensure return. This procedure is as follows:

- If the amount of refrigerant in the system has decreased, charge to the proper amount.
- Start the engine and select fast idle.
- Set the fan speed to full air/full A/C and let run for 20 minutes.

8. PREHEATING SYSTEM (OPTION)

This Auxiliary Preheating System is used for preheating and retaining the heat of water-cooled engines. It can be used before starting the engine to ease its starting and to provide immediate inside heat upon operation of the heating system. It can also be used with engine running to maintain coolant heat and maintain the set temperature inside vehicle.

The preheater operates independently from the vehicle engine. It is connected to the cooling and heating circuits, the fuel system and the electrical system of the vehicle.

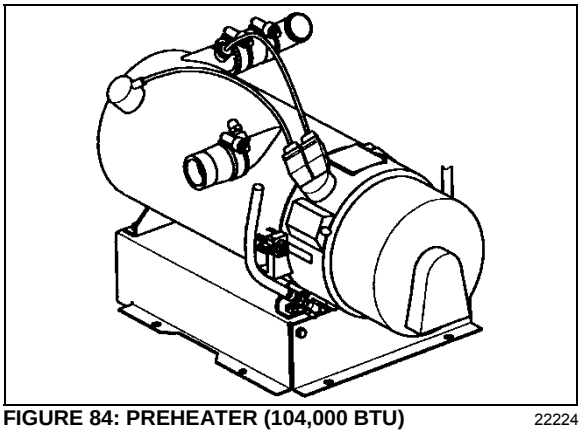

FIGURE 84: PREHEATER (104,000 BTU) 22224

The pilot lamp turns on when the preheater is switched on. Combustion air flows in to flush out the combustion chamber and the water circulation pump is put into operation. The fuel metering pump conveys fuel in precise doses to the combustion chamber where fuel and combustion air form a combustible mixture which is ignited by the glow plug.

Once the flame sensor has signaled to the control unit that combustion has taken place correctly, the glow spark plug and ignition coil are switched off.

The hot combustion gases are diverted at the end of the flame pipe, then pass through the indirect heating surfaces of the heat exchanger

and transmit their heat to the water passing through the heat exchanger.

The heat is thermostatically controlled and operates intermittently, i.e. the switched-on times of the burner vary depending on the heat requirement. The water temperature depends on the setting of the built-in water thermostat.

The water circulation pump remains in operation as long as the preheater is operating, even in the regulation intervals and during the delayed cutout of the switched-off preheater. The pump can also be operated independently from the preheater by means of an appropriate circuit. The preheater can be switched on at any time, even during the delayed cutout period. Ignition takes place once this delay time is over.

When the preheater is switched off, the fuel supply is interrupted. The flame goes out, and at the same time a delayed cutout of some 2.5 minutes begins. The combustion air still flowing flushes the remaining combustion gases out of the chamber and cools off the hot parts on the exhaust side of the heat exchanger, while the water circulation pump, still running, transmits the heat present in the heat exchanger, thus preventing local overheats. Once the delayed cutout time is over, both the combustion air blower and the water circulation pump switch off automatically.

A cutout will take place in case of any failure of the preheater.

8.1 PREHEATER FUEL FILTER

The preheater fuel filter is located beside the preheater above the rear wheelhousing, behind the vehicle's L.H. side rear fender.

MAINTENANCE

Replace preheater fuel filter every 50,000 miles (80 000 km) or once a year, whichever comes first.

8.2 OPERATION

Switch on the preheater. The operation indicator lamp comes on and the preheater motor and circulating pump begin to run. After about 10-25 seconds the solenoid valve opens and fuel is sprayed into the combustion chamber. At the same time, the electronic ignition unit produces high voltage (8000 V) and the mixture of fuel and air in the combustion chamber is ignited by the spark on the ignition electrodes. The flame is indicated by the flame detector, then the electronic ignition unit stops producing high voltage and combustion continues by itself (spark on electrodes is required only to ignite the flame). At this moment, the preheater is working and producing heat.

If the preheater is switched off by the on/off switch, the solenoid valve interrupts fuel supply, combustion stops and indicator lamp turns off. Combustion air fan still blows air, cleaning the combustion chamber of any fumes and cooling down the combustion chamber. Coolant circulation pumps coolant, making a purge cycle for approximately 2-3 minutes, thus protecting the preheater against overheating.

If the preheater is not switched off by the on/off switch, the control thermostat will switch off the preheater when coolant temperature reaches 165° ± 6°F (75° ± 3°C) and turns it on at 154° ± 9°F (68° ± 5°C). During this time, the preheater (combustion) is off and the indication lamp and coolant pump are on. Combustion air fan blows air for 2-3 minutes and then turns off.

8.3 PREHEATING SYSTEM TIMER

The timer, located on L.H. lateral console is used to program the starting and stopping time of the preheating system. The system indicator light, located on the timer, illuminates when the system is functional.

In case of failure:

1. Shut off and turn on again.
2. Check main circuit breaker and overheat fuse.
3. Have system repaired in a specialized shop.

8.3.1 Preheater timer instructions

Instructions are shown in the operator's manual provided with the vehicle or in the Spheros instruction booklet, found on your Technical Publications USB flash drive. These references are also available on the Technical Publications Website.

Operational Failure Symptoms via Fault/Flash code

On preheaters equipped with a fault diagnosis system using coded light signals, the equipment-on indicator/operation indicator flashes. Refer to the following table.

8.4 PREHEATER TROUBLESHOOTING AND MAINTENANCE

Refer to the Spheros manual for more information.

NOTE
If there are no preheater faults, the preheater will go through a normal start cycle and regulate based on thermostat setting.

NOTE
Switch on the preheating system briefly about once a month, even during the warm season.

CAUTION
To avoid running down the batteries, do not turn on the preheating system for more than one hour before starting the engine.

WARNING
The preheating system uses the same fuel as the engine. Do not operate in a building or while refueling. Operate only in a well-ventilated area.

Failure Symptoms	Probable Cause	Check and Correct
1X Flash (F 01) No combustion after completion of startup sequence.	- Fuel system - Combustion air - Electronic ignition	- Fuel level - Type of fuel being used - Fuel filter - Fuel line connections (air bubbles in fuel lines) - Fuel nozzle plugged - Air intake or exhaust, restricted or plugged - Incorrect electrode gap
2X Flashes (F 02) Flame out during burner operation no restart possible	- Fuel supply (shortage of fuel)	- Restriction in the fuel system - Fuel filter - Fuel line connections (air bubbles in fuel lines) - Type of fuel being used
3X Flashes (F 03) Low voltage for more than 20 seconds	- Electrical system	- Load test batteries - Corrosion at connections - Loose connections
4X Flashes (F 04) Flame detector recognizes false flame signal during pre-start or shut-down cycle	- Defective flame detector	- Replace flame detector
5X Flashes (F 05) Flame detector	- Wiring - Defective flame detector	- Damaged wiring, open or short circuit - Replace flame detector
6X Flashes (F 06) Temperature sensor	- Wiring - Defective temperature sensor	- Damaged wiring, open or short circuit - Replace temperature sensor
7X Flashes (F 07) Fuel solenoid valve	- Wiring - Defective solenoid valve	- Damaged or corroded wiring, open or short circuit - Replace solenoid valve
8X Flashes (F 08) Combustion air fan motor	- Wiring - Wrong RPM - Defective combustion air fan motor	- Damaged wiring, open or short circuit - Replace combustion air fan - Replace combustion air fan
9X Flashes (F 09) Circulation pump motor	- Wiring - Defective circulation pump motor	- Damaged wiring, open or short circuit - Replace circulation pump motor
10X Flashes (F 10) Temperature limiter	- Overheat condition - Coolant flow - Wiring - Defective temperature limiter	- Reset temperature limiter - Coolant level or flow restriction - Air trapped in coolant circuit - Damaged or corroded wiring, open or short circuit - Replace temperature limiter
11X Flashes (F 11) Electronic ignition coil	- Wiring - Defective electronic ignition coil	- Damaged wiring, open or short circuit - Replace electronic ignition coil
12X Flashes (F 12) Heater lock out	- 3 repeated faults/flame-outs or 5 repeated start attempts	- Reinitialize control unit by switching heater on and disconnecting power.

9. SPECIFICATIONS

Passenger's unit evaporator motor

Make..... AMETEK ROTRON
Type .....BRUSHLESS DC MICROPROCESSOR CONTROLED
Voltage ..... 27.6 V DC
Current draw ..... 68 amps
Horsepower 2
Revolution ..... 1400 & 1700 rpm
Insulation .....Class F

Passenger's unit condenser fan motors

Make.....EBMPAST
Type .....12" AXIAL BRUSHLESS
Voltage ..... 24 V DC
Qty 4

Driver's unit evaporator motors

Make.....MCC
Voltage ..... 24 V DC
Quantity 1

Driver's unit evaporator air filter

Make.....MCC
TYPE .....Washable recirculating air 6-¼" x 28"
Make.....MCC
TYPE ..... Washable fresh air 3-5/8" X 5-1/4"

Refrigerant

Type R-134a
Quantity (central HVAC system) ..... 24 lbs
Quantity (central HVAC system with optional overhead compartment A/C system) ..... 26 lbs
Quantity (small HVAC system) ..... 4 lbs

Compressor (Central HVAC system)

Make.....Bitzer
Displacement ..... 41 CFM
Model, R-134a..... 4NFCY
No. of cylinders 4
Cylinder volume .....39 in^3 (647 cm^3)
Operating speed.....500 to 3500 rpm
Oil capacity.....2.8 quarts (2,6 liters)
Weight ..... 74 lbs (33 kg)
Oil type .....Polyolester ISO68

Magnetic clutch

Make..... Lang
Type KK73.1
Voltage ..... 24 V DC

A/C Compressor (Small HVAC system)

Make.....ICE (International Components Engineering)
Model..... TM-16HD
Prevost number.....950436
Approved oil .....OIL-ICE (PAG)

Condenser Fan (Small HVAC system)

Diameter ..... 12 in (30.5 cm)
Power..... 850W
Voltage (nominal) .....24 Volts
Voltage (operating range) ..... 16-32 Volts
Maximum speed ..... 4760 rpm
Sealing .....SAE J1455 IP67 / IP69K
Operating temperature range ..... -40 to 138°F (-40 to 59°C)

Receiver tank (with sight glasses)

Make.....Westermeyer
Maximum pressure..... 450 psig

Filter-dryer assembly

Make..... Emerson-Alco

Moisture indicator

Make..... Emerson-Alco

Liquid refrigerant solenoid valve

Make.....Sporlan Parker Hannifin
Type .....Normally closed with manual bypass
Voltage ..... 24 V DC

Passengers' unit hot water pneumatic valve

Make.....BURKERT
Type .....Normally open
Voltage ..... 24 V DC
Pressure range..... 0 to 230 psi
Max. temperature .....356°F

Driver's unit hot water pneumatic valve

Make.....Asco
Type .....Normally open
Voltage ..... 24 V DC

Hot water circulating pump

Make..... AMETEK
Flow..... 15 gpm
Inlet/outlet OD ..... 3/8”

Main expansion valve

Make..... Emerson-Alco

Preheating system

Make..... SPHEROS
Model..... THERMO 300
Capacity ..... 104 000 Btu/h (30 kW)
Heating medium ..... Coolant
Rated voltage ..... 24 V DC
Operating voltage ..... 20-28 V DC
Electric power consumption (without coolant recirc. pump)..... 110 watts
Fuel consumption ..... 1,2 US gallons/hr (4,5 liters/hr)

CONTENTS

1. TORQUE TABLES 3

1.1 TROUBLESHOOTING 7
1.2 HOW TO RECEIVE SERVICE FOR YOUR REI AUDIO AND VIDEO PRODUCTS 7
1.3 DASHBOARD RADIO 8
1.3.1 Removal/Installation 8
1.4 VSS-05 SOUND SELECTOR 8
1.4.1 Removal/Installation 8
1.5 400W DSP POWER AMPLIFIER 9
1.6 SPEAKERS 9
1.7 BOOM-TYPE MICROPHONE 9
1.7.1 Removal 9
1.7.2 Installation 9
1.8 HANDHELD PRIORITY MICROPHONE 10
1.9 WIRELESS MICROPHONE 10
1.10 TV TUNER 10
1.11 DRIVER'S SPEAKERS 10
1.12 MONITOR 10
1.13 SCENIC VIEWING SYSTEM 11
1.14 ROOF ANTENNA INSTALLATION 11

2. BACK-UP CAMERA AND MONITOR 11

3. HUB ODOMETER 13

3.1 DESCRIPTION 13
3.1.1 REMOVAL 13
3.1.2 INSTALLATION 13
3.2 OPERATION 13

4. DESTINATION SIGN 13

4.1 DESCRIPTION 13

5. SUNSHADES 14

5.1 WINDSHIELD SUNSHADES 14
5.1.1 End of Stroke Adjustment 14
5.2 PASSENGER SUNSHADES 15
5.2.1 Preload Adjustment 15

6. LAVATORY 15

6.1 DESCRIPTION 15
6.2 MAINTENANCE 15
6.3 VENTILATION FAN 15
6.3.1 Description 15
6.3.2 Maintenance 15
6.3.3 Removal and Installation 16
6.4 DOOR LOCK 16
6.5 LAVATORY LIGHT WITH MOTION SENSOR 16
6.5.1 Removal and Installation 16
6.5.2 Dip Switch Settings 16
6.6 EMERGENCY BUZZER 17
6.7 FRESH WATER TANK 17

6.7.1 Fresh Water Tank Heater (Optional) *17*
6.7.2 Fresh Water Tank Draining *17*
6.7.3 Fresh Water Tank Filling *17*
6.8 LIQUID SOAP DISPENSER 17
6.9 FLUSH PUSH-BUTTON 18
6.9.1 Pneumatic Timer Removal and Installation *18*
6.9.2 Timer Adjustment *18*
6.10 FLUSH PUMP 18
6.10.1 Flush Pump Pressure Adjustment *19*
6.11 SUMP TANK 19
6.11.1 Sump Tank Draining *19*
6.11.2 Sump Tank Filling *19*
6.12 CLEANING CABINET 19

7. AIR HORN VALVE 19

7.1 AIR HORN VALVE MAINTENANCE 20

8. HEADLIGHTS CLEANING SYSTEM 20

8.1 GENERAL DESCRIPTION 20
8.2 WASHER FLUID REFILLING 20
8.3 WASHER NOZZLES ADJUSTMENT 20

9. WINDSHIELD WIPERS AND WASHERS 21

9.1 GENERAL DESCRIPTION 21
9.2 WIPER ARM 22
9.2.1 Sweep Adjustment *22*
9.2.2 Removal *23*
9.2.3 Installation *23*
9.3 LOWER LINKAGE ADJUSTMENT 23
9.4 UPPER LINKAGE ADJUSTMENT 23
9.5 WINDSHIELD WIPER MOTORS 24
9.5.1 Lower Windshield Wiper Motor Replacement *24*
9.5.2 Upper Windshield Wiper Motor Replacement *25*

10. AUTOMATIC FIRE SUPPRESSION SYSTEM (AFSS) (OPTIONAL) 26

10.1 STARTING THE VEHICLE AFTER TRIGGERING OF A FIRE ALARM 26
10.2 PERIODIC MAINTENANCE 26

11. TIRE PRESSURE MONITORING SYSTEM (TPMS) 27

1. TORQUE TABLES

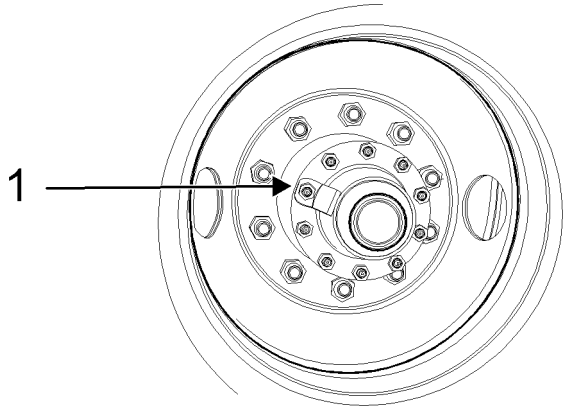

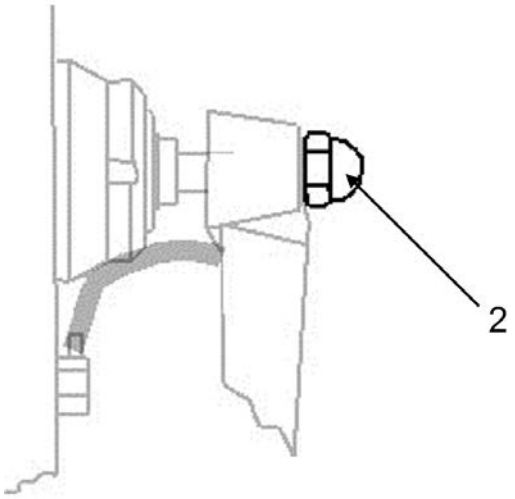

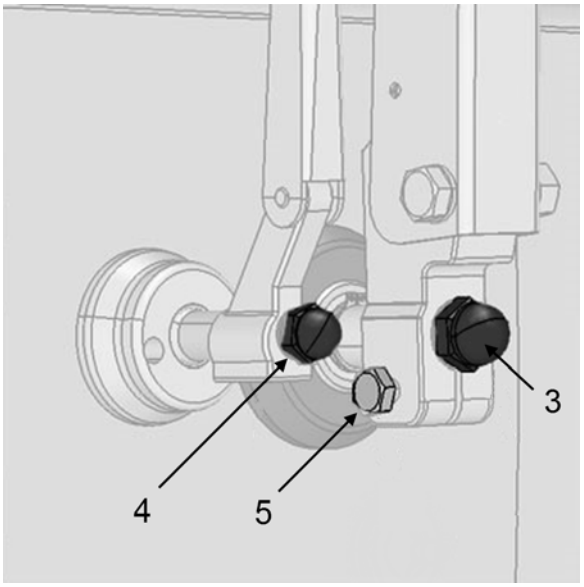

MISCELLANEOUS		
No	DESCRIPTION	TORQUE
1	Hubodometer mounting bolts	110-165 lb-ft (149-224 Nm)
2	Upper wiper arm cap nut	20-24 lb-in (2.26-2.71 Nm)
3	Lower wiper arm cap nut (drive arm)	20-24 lb-in (2.26-2.71 Nm)
4	Lower wiper arm cap nut (idler arm)	90-110 lb-in (10-12 Nm)
5	Lower wiper arm clamping screw	155-165 lb-in (18-19 Nm)

AUDIO AND VIDEO SYSTEM DESCRIPTION

The rack mounted components are gathered on the audio-video panel which is located in the first driver's side overhead compartment (Figure 1). In addition to the 400 watts power amplifier, an E-HDMI (automotive grade) switch provides options for systems such as TV, DVD, customer provided media player, scenic view and back-up cameras, GPS navigation system and wireless microphones. Options for AM/FM radio, satellite radio, karaoke, and other's entertainments systems may also be featured.

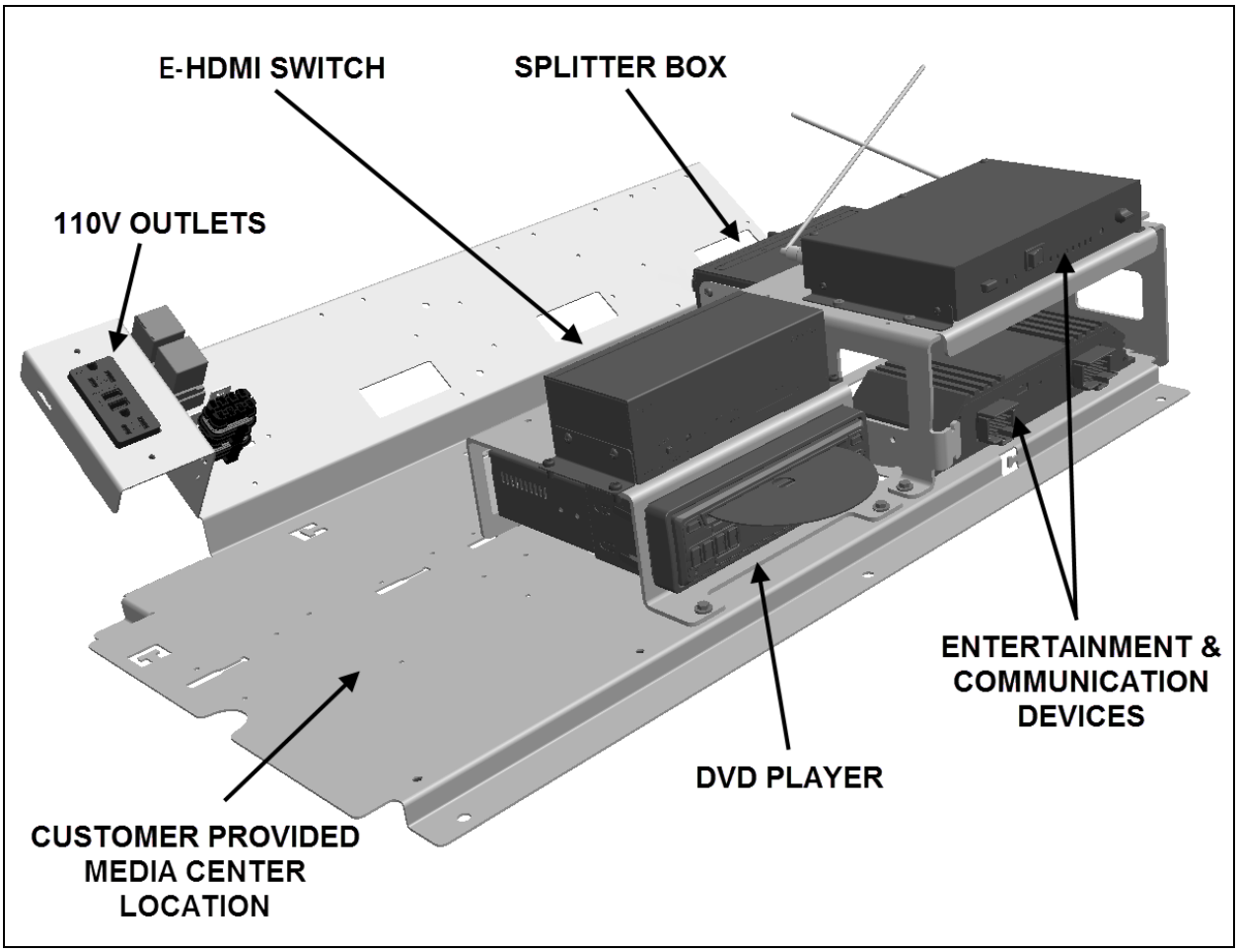

FIGURE 1: AUDIO-VIDEO PANEL IN PARCEL RACK

A splitter box is also mounted on the audio/video panel and provides connection for four LCD screens. On some vehicles, a second splitter box mounted in the first curb side overhead compartment will allow the use of a total of six LCD screens.

Each passenger's overhead console mounted to the underside of the parcel racks contains a 20-watt coaxial 10cm speaker. Powered by the amplifier, the speakers (24 in H3-41 or 28 in H3-45) are wired in stereo and arranged in a delta configuration.

A microphone outlet mounted in the driver's area is also provided as standard equipment.

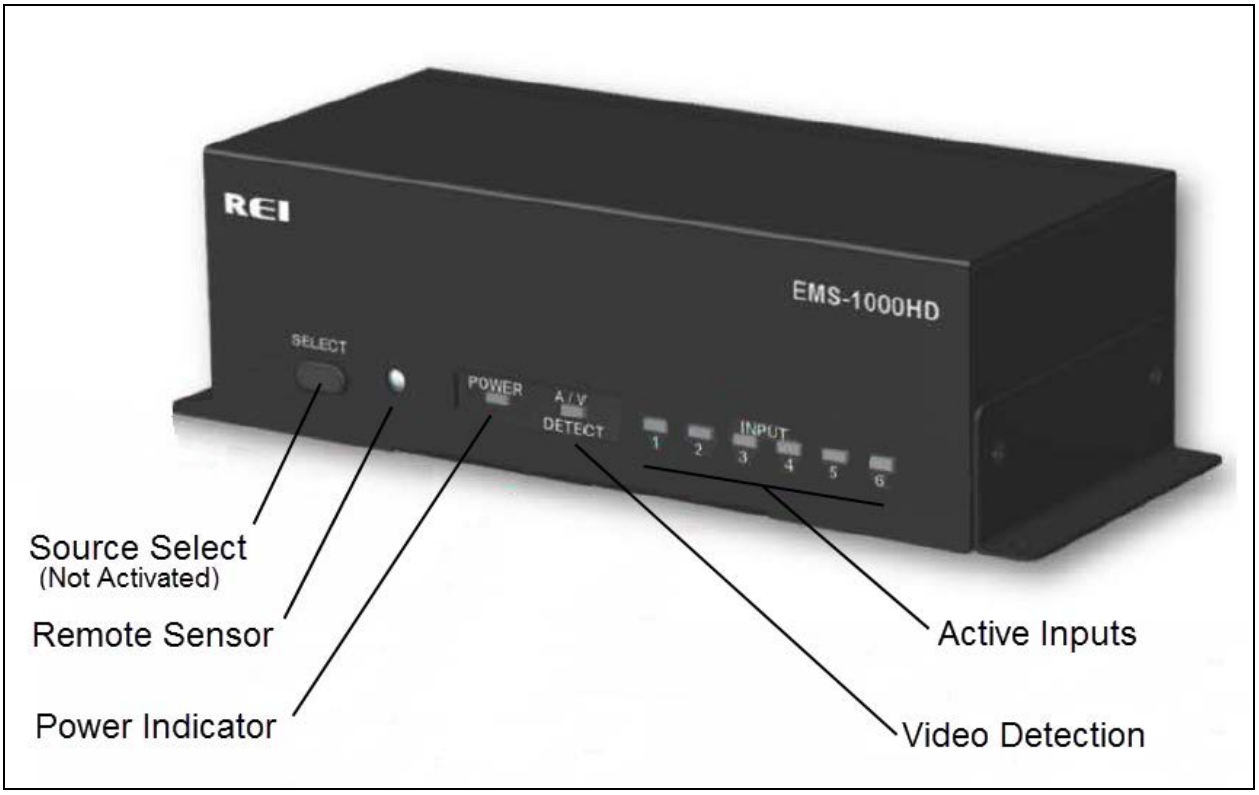

FIGURE 2: AUDIO-VIDEO CONTROLS AND INDICATORS ON THE FRONT FACE OF THE E-HDMI SWITCH

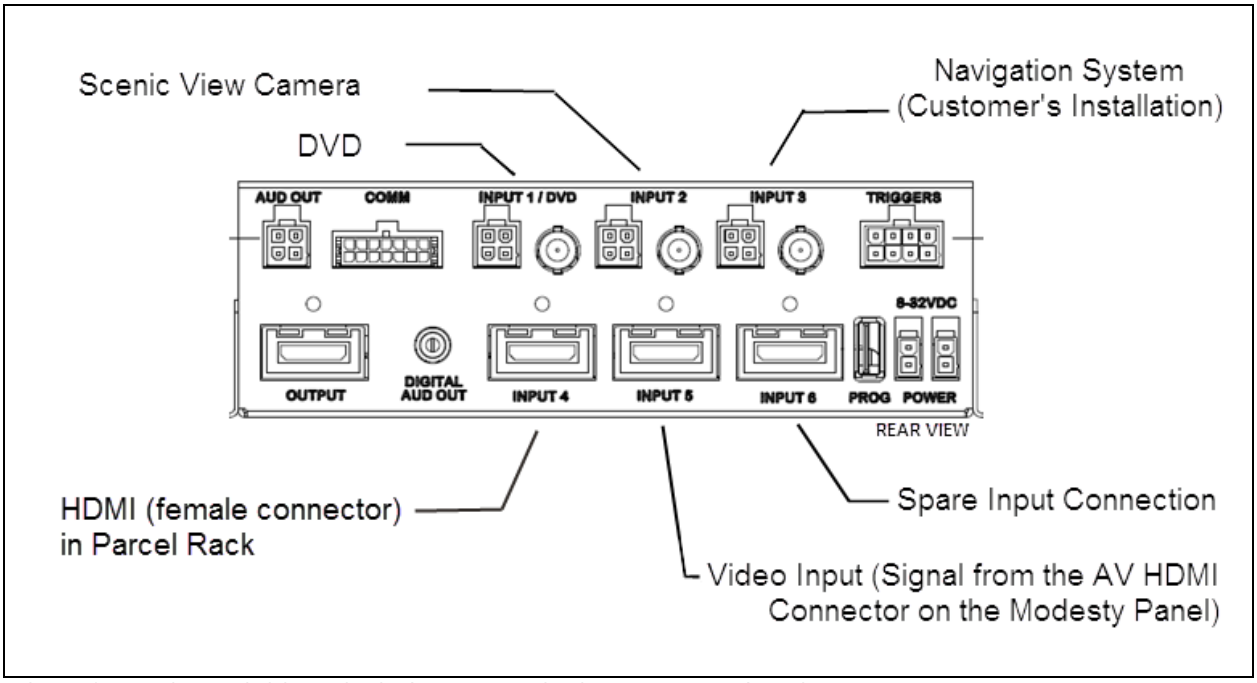

FIGURE 3: **AUDIO-VIDEO CONNECTIONS AT THE BACK OF THE E-HDMI SWITCH**

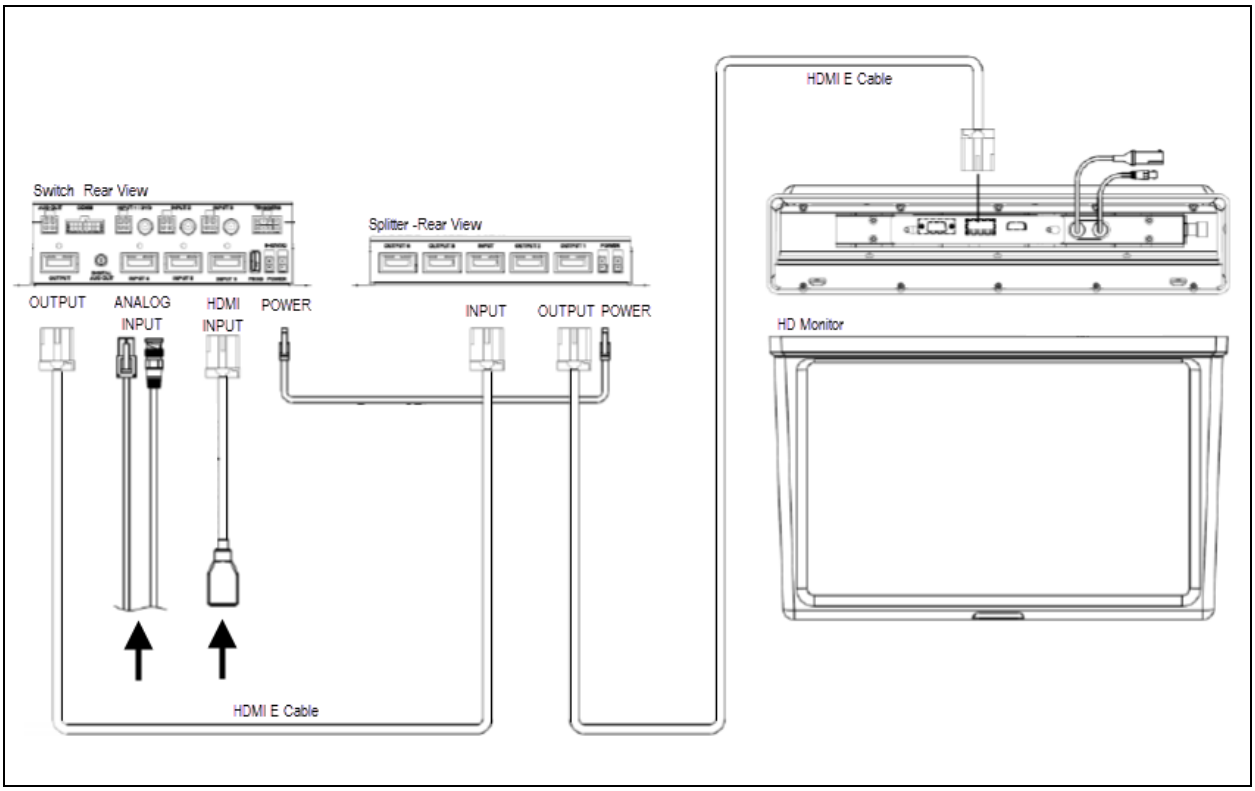

FIGURE 4: TYPICAL AUDIO-VIDEO CONNECTIONS USING FOUR OUTPUT SPLITTER BOX

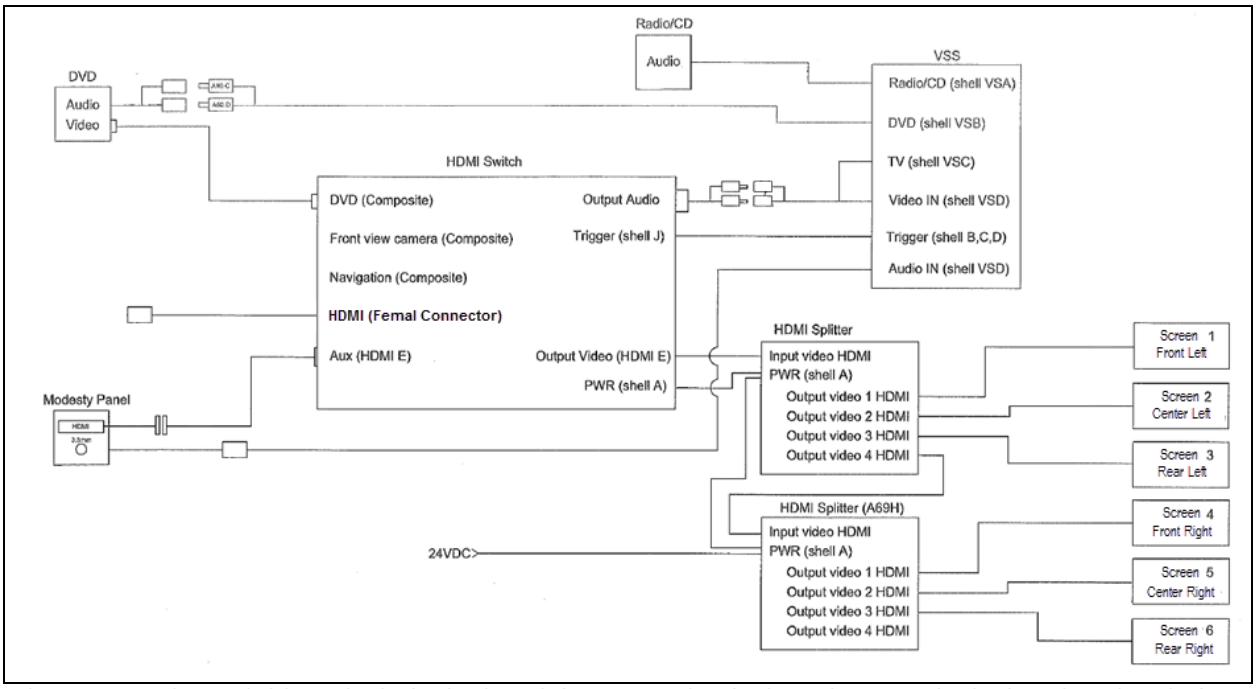

FIGURE 5: AUDIO-VIDEO CONNECTIONS USING TWO SPLITTER BOXES TO ALLOW THE USE OF SIX LCD MONITORS

1.1 TROUBLESHOOTING

Symptom	Possible Causes / Solutions
No picture, no sound	Check for proper voltage supply and correct cable connections. Ensure that the desired input is selected.
No picture	Check whether AV cable is properly connected. Check whether HDMI cables are properly connected. Verify that HDMI source is connected to “INPUT” connector and devices to “OUTPUT”. Verify power connection and voltage.
No sound	Check for proper cable connections. Verify that the source volume level is properly set.
Remote control not working	Check that remote control is pointed toward device sensor. Verify remote batteries.

1.2 HOW TO RECEIVE SERVICE FOR YOUR REI AUDIO AND VIDEO PRODUCTS

For assistance in obtaining service for REI products call toll free 877-726-4617 (Continental United States and Canada) between the hours of 7:00 A.M. - 5:00 P.M. CST Monday thru Friday (excluding Holidays).

For assistance in obtaining service for REI products call toll free 877-726-4617 (Continental United States and Canada only) between the hours of 7:00 A.M. - 5:00 P.M. CST Monday thru Friday (excluding Holidays).

Prior to calling REI, please have the part number, serial number, VIN number and detailed description of the problem ready to provide to the REI service representative. After providing information to REI, customers will be issued a return authorization number. When the REI service representative provides the return authorization number, they will also give instructions for returning the item. Any discrepancies in following this procedure may cause delays in the process.

24/7 Tech Support

CALL 1-877-726-4617

E-Mail to technicalsupport@radioeng.com

REI Authorized Repair Facilities

REI
6534 L Street
Omaha, Nebraska 68117

REI
1376 Bennett Drive, Unit 126
Longwood, Florida 32750

REI products that may be installed in your coach:

MONITOR, COLOR BACK-UP CAMERA
MONITOR, LCD 15.6”
MONITOR, CENTRAL LCD 15.6”
MONITOR, FLIP19”
MONITOR, 16:9 CENTRAL LCD 19”
INDIVIDUAL ENTERTAINMENT SYSTEM
AMPLIFIER, 8-CHANNEL
DVD PLAYER
DVD REMOTE CONTROL
CAMERA, COLOR BACK-UP
CAMERA, COLOR PANORAMIC
MICROPHONE, 10” CB TYPE
MICROPHONE, WIRELESS
RECEIVER, WIRELESS MIC 16-CHANNEL
ENHANCED MEDIA SWITCH (E-HDMI)
E-HDMI SPLITTER BOX

1.3 DASHBOARD RADIO

FIGURE 6: DASHBOARD RADIO

NOTE
Before attempting to solve an electrical problem on the sound system, refer to the wiring diagrams.

The radio operating instructions manual is included at the end of this.

1.3.1 Removal/Installation

To remove the radio from its location, proceed as follows:

1. Place the ignition switch in the ‘‘OFF’’ position.
2. Remove the dashboard cover.
3. Unplug the connectors from the radio and unfasten back plate securing nuts/screws.
4. On the front side of the unit, insert the removal tool #20584494 in the holes found each side in order to separate the unit from the support.
5. From behind, push the unit through the front dashboard panel.
6. Installation of a new unit is the same as removal but in reverse order.

1.4 VSS-05 SOUND SELECTOR

FIGURE 7: VSS-05 SOUND SELECTOR

1.4.1 Removal/Installation

To remove the Sound Selector from its location, proceed as follows:

4. Place the ignition switch in the ‘‘OFF’’ position.
5. Remove the dashboard cover.
6. Unplug the connectors from the radio and unfasten back plate securing nuts/screws.
4. On the front side of the unit, insert the removal tool #20584494 in the holes found each side in order to separate the unit from the support.
5. From behind, push the unit through the front dashboard panel.
6. Installation of a new unit is the same as removal but in reverse order.

The operating instructions are included in the Operator’s Manual.

1.5 400W DSP POWER AMPLIFIER

This 400-watt, 8 channels digital amplifier brings an added dimension to your stereo equipment and increases the total output of the system.

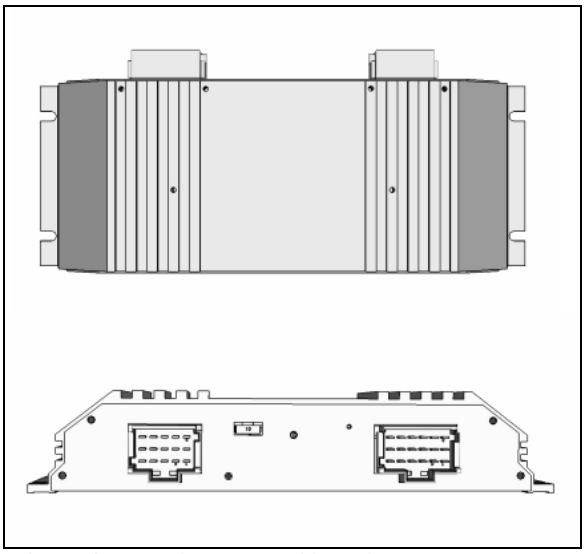

FIGURE 8:MULTICHANNEL 400W POWER AMPLIFIER

CONNECTOR 9-966140-2 PINOUT

Terminal	Function	Terminal	Function
1	R-DOOR (-)	9	L-DASH (-)
2	R-DASH (+)	10	GROUND
3	R-DASH (-)	11	GROUND
4	R-DOOR (+)	12	GROUND
5	L-DOOR (+)	13	+24V
6	L-DOOR (-)	14	+24V
7	REMOTE	15	+24V
8	L-DASH (+)	16	

CONNECTOR 9-966140-1 PINOUT

Terminal	Function	Terminal	Function
1	R-BUNK (-)	10	INPUT-RR (+)
2	WOOFER (1) (-)	11	INPUT-RR (-)
3	WOOFER (1) (+)	12	
4	R-BUNK (+)	13	INPUT-LR (-)
5	L-BUNK (-)	14	INPUT-LR (+)
6	L-BUNK (+)	15	INPUT-LF (+)
7		16	INPUT-RF (+)
8	WOOFER (2) (-)	17	INPUT-RF (-)
9	WOOFER (2) (+)	18	INPUT-LF (-)

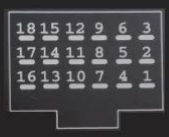

FIGURE 9: AMPLIFIER CONNECTORS PINOUT

1.6 SPEAKERS

Each passenger's overhead console mounted to the underside of the parcel racks contains a 20-watt coaxial 10cm speaker. The speakers (24 in H3-41 or 28 in H3-45) in the passenger's section, wired in stereo and arranged in a delta configuration are powered by the amplifier.

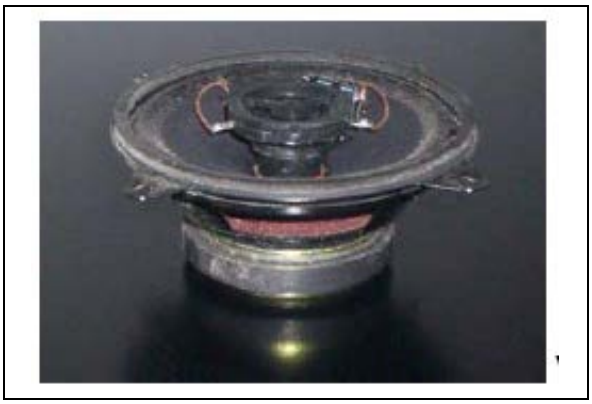

FIGURE 10: 10CM COAXIAL SPEAKER

The vehicle may be equipped with two additional Hi-Fi speakers in the driver's area, mounted one on each side. This arrangement provides the driver with clear stereo sound. Controls for the driver's audio are performed through the dashboard radio.

Two specially designed subwoofers are fixed under a passenger seat with anti-vibration supports.

1.7 BOOM-TYPE MICROPHONE

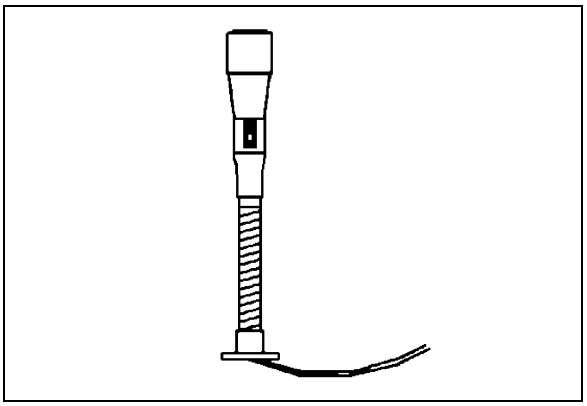

FIGURE 11: BOOM-TYPE MICROPHONE 23083

1.7.1 Removal

1. Place the ignition switch in the ''OFF'' position.
2. Remove the mounting screws at mounting flange.
3. Disconnect wiring.

1.7.2 Installation

1. Reconnect wiring.

2. Align mounting flange with holes and install screws.
3. Remove spacer block mounting screws.
4. Insert spacer block and install mounting screws.
5. Place the battery master switch in the ‘‘ON’’ position.

1.8 HANDHELD PRIORITY MICROPHONE

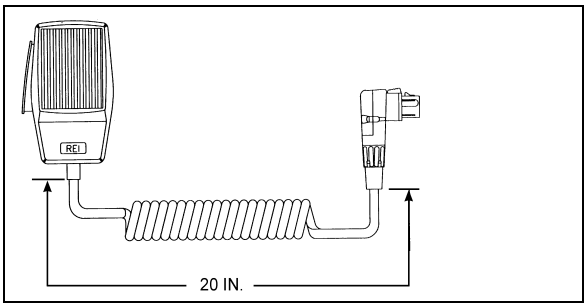

FIGURE 12: HANDHELD PRIORITY MICROPHONE 23216

1.9 WIRELESS MICROPHONE

The System 2000 16 channel wireless microphone, Receiver and Charging Cradle are custom designed units that allow for wireless PA communication from anywhere on the coach. The unit consists of a receiver mounted in the parcel area directly behind the driver, and a rechargeable hand-held microphone and charging unit. Instructions for proper use of the microphone are included in the *"REI Operating Manual"* which is provided in the technical publications box delivered with the vehicle.

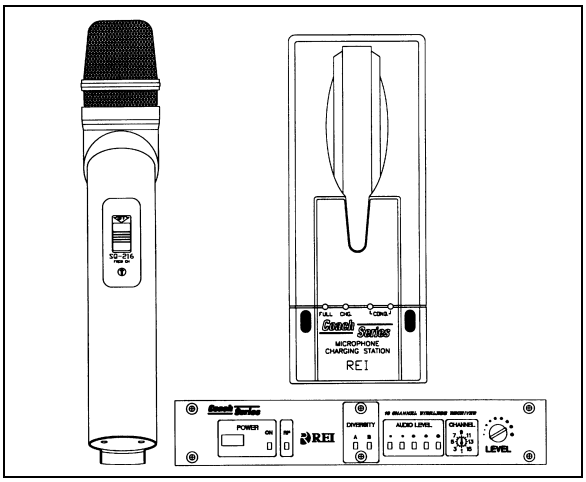

FIGURE 13: WIRELESS MICROPHONE

1.10 TV TUNER

For TV tuner control descriptions, refer toFigure 14.

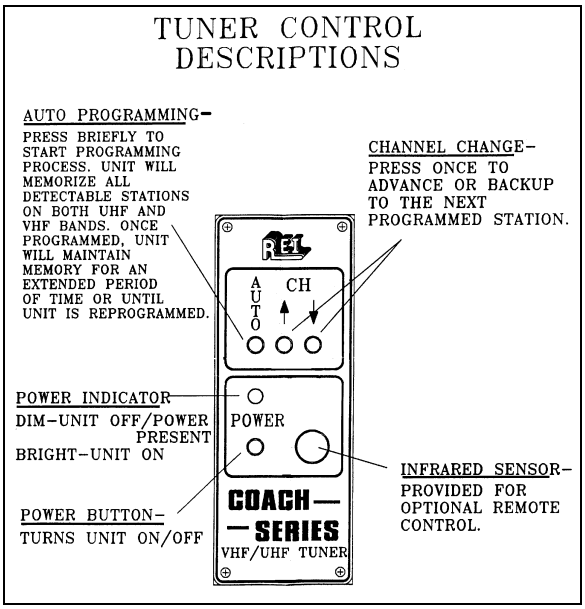

FIGURE 14: TUNER CONTROLS DESCRIPTION

1.11 DRIVER’S SPEAKERS

The driver’s speakers are mounted one on each side. This arrangement provides the driver with clear stereo sound. Controls for the driver’s audio allow selection between the radio and the auxiliary audio (independent of the passenger’s speakers) or muting the speakers.

1.12 MONITOR

1. Place the ignition switch in the ‘‘OFF’’ position.
2. Unfasten the retaining screw located on the monitor R.H. side.
3. Slide the monitor to the right to release it from the mounting bracket.

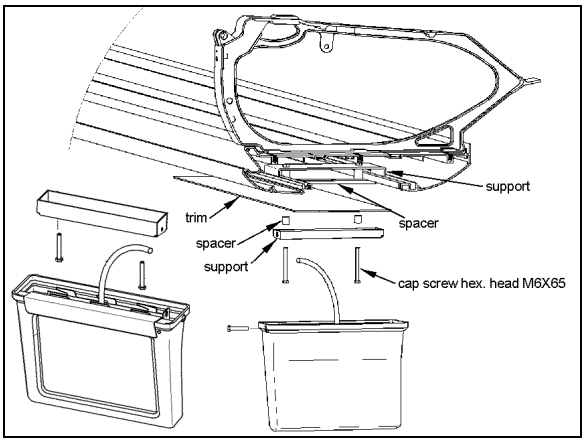

FIGURE 15: MONITOR MOUNTING **23221**

1.13 SCENIC VIEWING SYSTEM

The scenic viewing system enables the passengers to view the road ahead of the vehicle. This system is composed of a camera, a dashboard mounted ON/OFF switch and the video switcher located on the audio-video panel

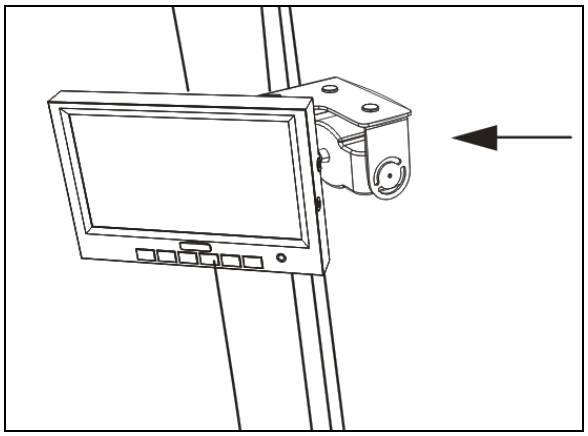

FIGURE 16: SCENIC VIEW CAMERA

1.14 ROOF ANTENNA INSTALLATION

1. Find the desire location and drill a hole according to specification.
2. To remove dirt and grease, wash hole edge with alcohol.
3. If so equipped, remove foam padding ring from antenna to free the metal surface (foam can produce air bulbs in new rubber seal).
4. With SIKA 205, wash the vehicle hole edge and the antenna base surface, wait at least two (2) minutes for chemical evaporation.
5. Apply new seal SIKA 221 on both, vehicle hole edge and antenna base.
6. Fix the antenna in place.
7. Remove excess seal and complete a finishing joint all around the antenna base.

2. BACK-UP CAMERA AND MONITOR

An optional back-up camera is available which provides the driver with visual assistance when backing-up. The camera is automatically activated when the transmission is put in reverse gear and the ignition switch is "ON".

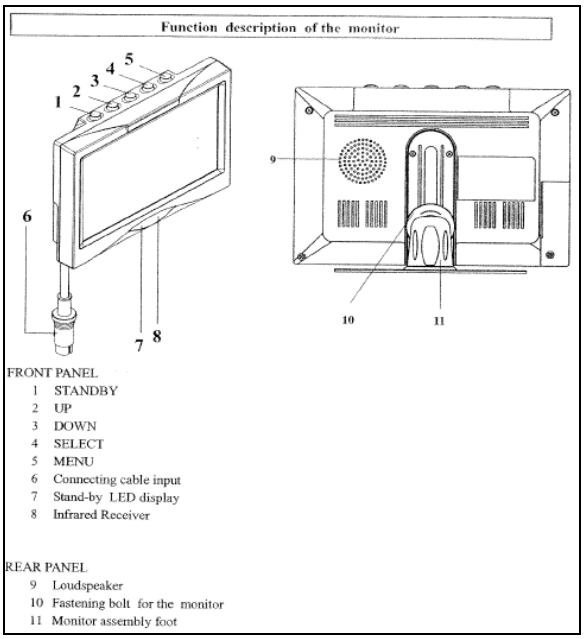

BUTTON DESCRIPTION

1) STANDBY On/Off switch

2) UP This key has 3 functions

- Increase of the volume during normal operation;
- Modification of the setting within a function e.g. contrast (after calling up the menu);
- By pressing this key when putting in the reverse gear, the distance markings move upwards;

3) DOWN This key has 3 functions

- Decrease of the volume during normal operation;
- Modification of the setting within a function e.g. contrast (after calling up the menu);
- By pressing this key when putting in the reverse gear, the distance markings move downwards;

4) SELECT This key has 3 functions

- Selection of the video sources (CA1→ CA2 → AV → CA1). Press less than 1.5 seconds;
- Selection of the functions e.g. picture setting (after calling up the menu);
- Deleting and calling OSD letters of title & time (press longer than 1.5 seconds) during normal operation;

5) MENU This key has 2 functions

- Activation of the dimmer function (press less than 1.5 seconds) during normal operation;
- Calling up the menu (press longer than 1.5 seconds, four menus can be called up). Press the key once again to call up the individual menus;
  - a) PICTURE= Functions for the image setting;
  - b) USER= Selection of the system function;
  - c) TIME= Setting time and date;
  - d) INSTALL= Setting the camera function (e.g. mirror function);

6) BUSH FOR THE MONITOR CABLE OF THE CONNECTION BOX

7) STANDBY DISPLAY

8) INFRARED RECEIVER

MONITOR MENU DISPLAY

The monitor (RV59 HD) is equipped with an On-Screen Display (OSD) function which displays date, camera, channel, mirror mode and distance markings. These functions can be selected on MENU. To calling up the menu, press longer than 1.5 seconds. Four menus can be called up. Press the key once again to call up the individual menus.

For calling up the menu PICTURE press the key **MENU** longer than 1.5 seconds. The menu PICTURE appears.

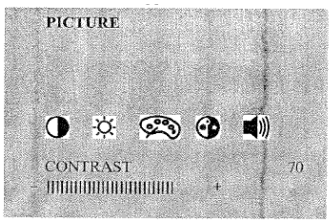

Graphic means the followings.

- ➔ CONTRAST
- ➔ BRIGHTNESS
- ➔ COLOR
- ➔ TINT
- ➔ VOLUME

Select the function (e.g. contrast) by pressing the key **SELECT** repeatedly. The setting within the function can be modified with the keys **UP** and **DOWN**.

For calling up the menu USER press the key **MENU** once again. The menu USER appears. Select the function (e.g. SELECTION) by pressing the key **SELECT** repeatedly as necessary. The setting within the function can be modified with the keys **UP** and **DOWN**.

USER	
LANGUE	ENG
SCREEN	WIDE
TITLE	ON
TIME	ON

POSSIBLE SETTINGS:

LANGUAGE: ENGLISH/GERMAN (ENG/DEUT)

SCREEN FORMAT: NOR 4:3, picture format 4:3
WIDE, picture format 16:9
FULL, picture format 16:9 middle enlarge

TITLE: CAMERA TITLE DISPLAY ON/OFF

TIME: TIME DISPLAY ON/OFF

For calling up the menu TIME press the key **MENU** once again. The menu TIME appears. Select the function (e.g. DATE) by pressing the key **SELECT** repeatedly as necessary. The setting within the function can be modified with the keys **UP** and **DOWN**.

TIME	
TIME	08:25
DATE	MAY01
YEAR	2005

- Hour-Month adjustable by UP BUTTON
- Minute/Date adjustable by DOWN BUTTON
- Year adjustable by UP/DOWN BUTTON

For calling up the menu INSTALL press the key **MENU** once again. The menu TIME appears. Select the function (e.g. SELECTION) by pressing the key **SELECT** repeatedly as necessary. The setting within the function can be modified with the keys **UP** and **DOWN**.

INSTALL	
REAR	CAM1
CAM1	MIR
CAM2	NOR

POSSIBLE SETTINGS:

REAR: Selection of priority camera (CAM1 or CAM2) which is triggered by rear gear.

CAM1: Selection of real picture or mirrored picture for camera 1

CAM2: Selection of real picture or mirrored picture for camera 2

NOTE1 The distance mark will appear on the picture of camera which set as MIR (mirrored).

NOTE2 Engaging the reverse gear, only distance mark will appear on the mirrored camera picture without any OSD. At the moment, no keys are available except UP/DOWN key for moving distance bar.

BACK-UP CAMERA MODULE (Power box)

The connection line consists of 6 branch lines as below:

RED	Voltage supply 12-volt to 24-volt (max. 32-volt)
BLACK/BROWN	Earth cable
WHITE	Control wire for switching on the dimmer function (night operation)
YELLOW	Control wire for switching on the side camera. The connection is to be made at the INDICATOR
ORANGE	Control wire for switching on the reversing camera. The connection is to be made at the reversing light

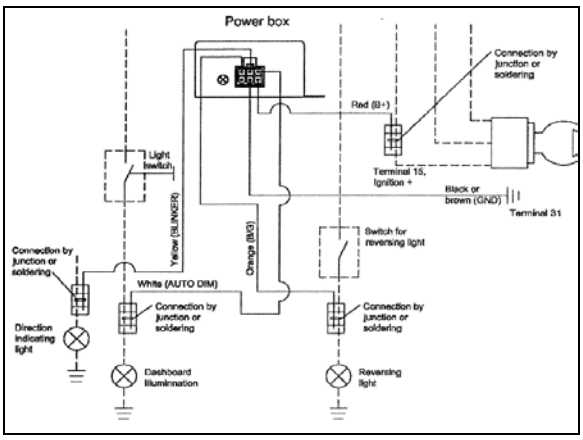

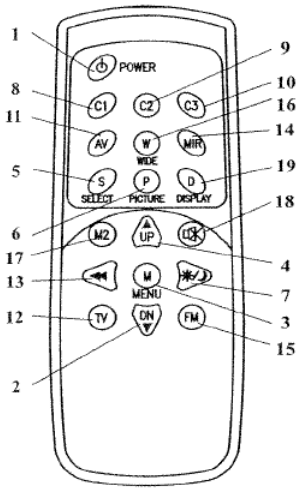

No	Key	Description
1	STANDBY	On/Off switch
2	DOWN▼	This key has 3 functions. – Decrease of the volume during normal operation. – Modification of the setting within a function e. g. brightness (after calling up the menu). – By pressing this key when putting in the reverse gear the distance markings move downwards.
3	MENU	Calling up the menu on the screen. Three menus can be called up : a: PICTURE = Functions for the image setting b: USER = Selection of the system function c: TIME = Setting time and date d: INSTALL = Setting the camera function (e.g. mirror function)
–4	UP ▲	This key has 3 functions. – Increase the volume during normal operation – Modification of the settings within a function e. g. contrast (after calling up the menu) – By pressing this key when putting in the reverse gear the distance markings move upwards.
5	SELECT	This key has 2 functions Selection of the video sources (CA1→CA2→AV) Selection of the functions e.g. picture setting (after calling up the menu)
6	PICTURER	Calls up the functions CONTRAST, BRIGHTNESS etc. directly for the picture setting. Carry out the setting with the key UP or DOWN.
7	DIMMER	Regulates the brightness to night operation temporarily
8	C1	Selection of the camera 1
9	C2	Selection of the camera 2
10	C3	Selection of the camera 3 (camera input 3 is not available))
11	AV	Selection of the video input (RCA)
12	TV	Not available
13	SEARCH	Not available
14	MIRROR	Reversing left and right of picture temporarily
15	FM	Not available
16	WIDE	Setting of the screen format NOR/NOR: 4:3, picture format 4:3 WIDE/WEIT, picture format 16:9 FULL/BREIT, picture format 16:9 middle enlarged
17	MONITOR2	Not available
18	MUTE	Switches off the tone temporarily
19	DISPLAY	This key has 2 functions – Deleting or calling OSD letters of Tile & Time temporarily – Leaving the menu

3. HUB ODOMETER

3.1 DESCRIPTION

An optional wheel hub odometer (Figure 17) may have been installed on the R.H. side of the drive axle. It indicates the total distance in miles or kilometers covered by the coach since it has left the factory, including road testing.

3.1.1 REMOVAL

To remove the unit, remove the two lock nuts and washers securing it to the wheel hub, and pull the unit off the studs.

3.1.2 INSTALLATION

Place the hub odometer unit over the wheel hub studs. Replace the lock washers and nuts. Torque stud nuts.

TORQUE: 110-165 lb-ft (149-224 Nm)

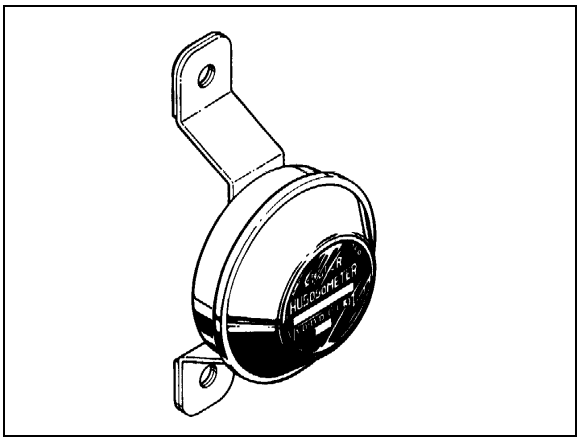

FIGURE 17: HUBODOMETER 23027

3.2 OPERATION

The hub odometer is calibrated for a specific wheel size (diameter). Wheel rotation causes a mechanism inside the hub odometer to record distance after a predetermined number of rotations. The unit should be serviced at a competent speedometer repair facility.

Note: *Do not use paint, solvent or thinner on hub odometer face or on plastic hubcaps. Do not weld on hub odometer.*

4. DESTINATION SIGN

4.1 DESCRIPTION

The destination sign is located at upper front of the vehicle.

ELECTRONIC DESTINATION SIGN (Optional)

To change the destination, depress the selecting switches until the desired destination appears in the LCD display.

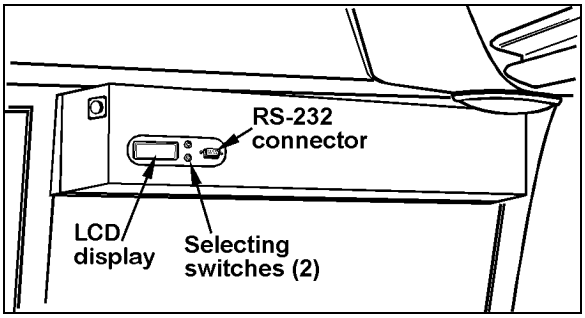

FIGURE 18: DESTINATION SIGN – ELECTRONIC
23123

Note: *The destination sign must be programmed with a computer connected to the RS-232 connector prior to first use. Follow the instructions on the computer disk to install and run the software.*

Note: *All destination sign models are equipped with lights (bulb light or fluorescent) which illuminates automatically when the headlight or fog light switch is activated.*

5. SUNSHADES

5.1 WINDSHIELD SUNSHADES

Two electrically-operated sunshades are installed in the driver's area at the top of the windshields. Two control buttons located on the steering wheel and two on the dashboard operate each sunshade individually. Refer to Operator's Manual: "Controls and Instruments" chapter for more information.

Caution: *The electric sunshades should only be operated electrically. Pulling down manually may damage the mechanism.*

5.1.1 End of Stroke Adjustment

The sunshades end positions are pre-adjusted at factory. If an adjustment is required, proceed as follows:

1. Place the ignition key to the ON position.
2. Insert a small nail or similar thin object into sunshade adjustment button access hole and press the appropriate sunshade DOWN button **simultaneously** and hold them until a beeping tone sounds. Release both buttons.

FIGURE 19: DRIVER'S SUNSHADE

FIGURE 20: L.H. SUNSHADES CONTROL BUTTON

3. Move the sunshade to the desired lower end of stroke position using the control button (never move sunshade by hand) and then release button.
4. Proceed to fine adjustment of lower end position by pressing the DOWN button repeatedly.
5. Press the sunshade UP (opposite direction) button to save #1 end position. The confirmation tone will sound.
6. Move the sunshade to the desired upper end of stroke position using the control button (never move sunshade by hand) and then release button.
7. Proceed to fine adjustment of upper end position by pressing the UP button repeatedly.
8. Press the sunshade DOWN (opposite direction) button to save #2 end position. The confirmation tone will sound. The adjustment mode is then deactivated.

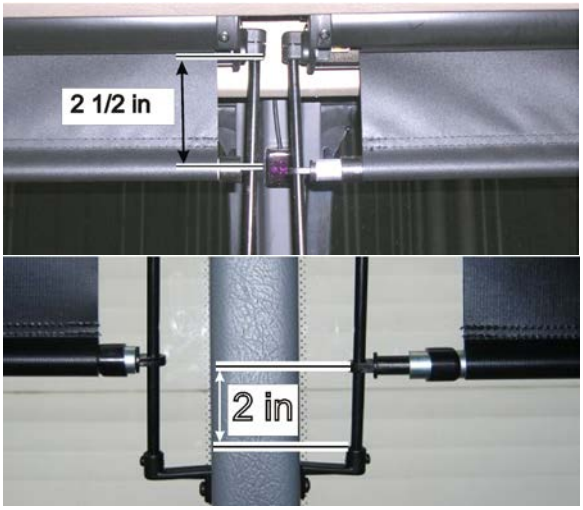

FIGURE 21: FACTORY ADJUSTMENT OF UPPER AND LOWER END POSITION

5.2 PASSENGER SUNSHADES

Manually operated passenger sunshades are factory installed on some vehicles. The sunshades are pulled down and can be locked in the window side moldings at half or full close position.

To release, simply disengage the sunshade from the moldings and release. Spring tension will pull back the sunshade to the full open position.

Correct spring tension is set at the factory and should not need further adjustment.

However, if for any reason a sunshade has to be removed from the vehicle, preloading of the recoil mechanism will be required before re-installation to ensure that the sunshade returns to the full open position when released.

Caution: *A special tool is required to remove the sunshade from the window support. Failure to use the special tool will result in permanent damage to the sunshade and/or window support.*

The special tool can be ordered from your Prevost part center under part # 685594

5.2.1 Preload Adjustment

Using the chart below, preload the sunshade mechanism before installing the sunshade in the window support.

Note: *When installed, lower the sunshade 6po (15cm) and release. The sunshade should retract freely to the full open position. Re-adjust preload as needed.*

Sunshade Type	Req. Preload
Std Sunshade	10 turns
Rear Sunshade	10 turns
Small Rear Sunshade	8 turns
Large WCL Sunshade	12 turns
Small Trapezoidal Sunshade	8 turns

6. LAVATORY

6.1 DESCRIPTION

The lavatory is located in the rear R.H. corner of the coach. It is equipped with a chemical flush toilet, bathroom tissue dispenser, washbasin, towel dispenser, waste container, mirror, ashtray, and a cleaning cabinet. A liquid soap dispenser and moist towel dispenser are optional.

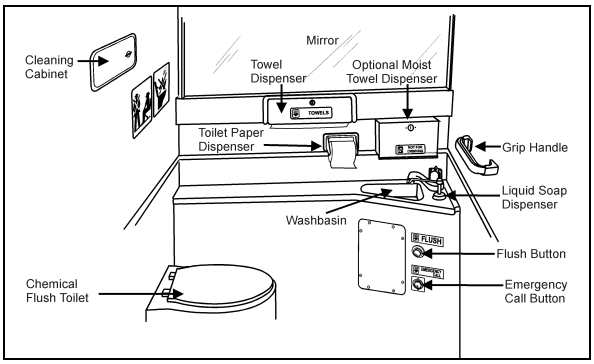

FIGURE 22: LAVATORY

Locking the lavatory door from the inside will illuminate a fluorescent light in the lavatory and two outside signs to indicate occupation. One sign is located on the outer wall of the lavatory and another sign is located over the windshield. An indicator light on the dashboard will illuminate to inform the driver when the lavatory is occupied. A night-light is permanently lit in the lavatory when the ignition switch is in the ON position.

6.2 MAINTENANCE

The servicing procedure for the lavatory is described in the *"Operator's Manual"* included in the technical publications box delivered with the vehicle.

6.3 VENTILATION FAN

6.3.1 Description

The lavatory ventilation fan, mounted in engine compartment over the oil reserve tank (Figure 23), serves two purposes. It exhausts objectionable odors and provides a constant air circulation in the lavatory compartment by heating or cooling the lavatory with the vehicle ambient air. Air flows in the lavatory compartment through a vent grill located in the upper section of the lavatory door and exhausts through a grill located next to the toilet.

Note: *This fan runs constantly when the ignition switch located on the dashboard is in the "ON" position.*

6.3.2 Maintenance

The frequency of preventive maintenance should be determined according to vehicle mileage and operating conditions. However, it is recommended to check this item every 50,000 miles (80 000 km) or once a year, whichever comes first.

Remove fan and motor assembly. Check for fan housing wheel and motor free operation. When defective motor occurs, new motor must be installed.

6.3.3 Removal and Installation

1. With the engine compartment rear door opened, remove hose clamp securing duct to ventilation fan inlet, and disconnect duct.
2. Disconnect the ventilation motor wiring connector.
3. Remove the two bolts retaining the ventilation fan housing support to the square tubing. Remove the ventilation fan assembly from its location.
4. The unit can now be disassembled and motor replaced.
5. Reverse previous steps to reinstall ventilation fan assembly on vehicle.

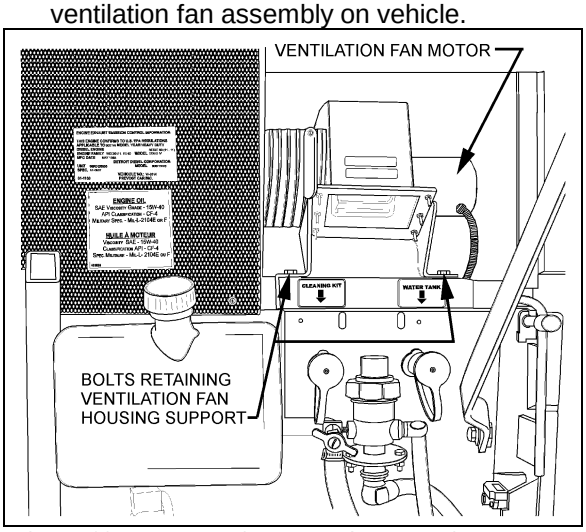

FIGURE 23: VENTILATION FAN INSTALLATION

6.4 DOOR LOCK

Lavatory door lock has inside and outside handles, as well as an inside latch to lock door from inside the compartment. If the lock fails to release, the door can be opened from the outside using a special key which is supplied to the driver. Lock assembly can be removed from the door, and then readily disassembled and parts replaced, if necessary. A thin coat of lubricant on all moving parts will ensure trouble-free operation.

6.5 LAVATORY LIGHT WITH MOTION SENSOR

The lavatory light, when dimmed, serves as a night-light and is illuminated as soon as the ignition switch is set to the “ON” position. A motion sensor will activate full light intensity whenever motion is detected in the lavatory compartment. The motion sensor will dim the light after a delay of 8 seconds when no additional motion is detected.

NOTE
The lavatory light motion sensor has a warm-up period of approximately 2 minutes after the ignition switch is set to the “ON”. During that warm-up period, the motion sensor will not detect motion and will not activate the lavatory light to full intensity.

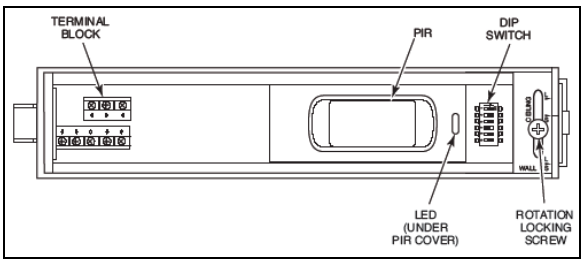

FIGURE 24: LAVATORY LIGHT MOTION SENSOR

6.5.1 Removal and Installation

1. Open the sensor housing by pressing on the latch with a screwdriver. The latch is located on the side of the sensor nearest the lens. Pull the cover up away from the sensor’s base.
2. Loosen rotation locking screw two (2) turns (do not remove). Then, remove PCB assembly from the back plate of the sensor.
3. Insert the wiring into one of the wire channels on the sensor’s back plate.
4. Securely affix the sensor’s back plate to the wall using #6X3/4 screws.
5. Reinstall the PCB assembly and then, tighten rotation locking screw.

6.5.2 Dip Switch Settings

Adjust DIP switches as follows:

1=off	2=off	3=off
4=on	5=off	6=off

6.6 EMERGENCY BUZZER

The lavatory emergency buzzer is mounted on the alarm junction box in the front service compartment and sounds when the emergency call push-button switch in the lavatory compartment is activated. For specific wiring information, refer to wiring diagrams. To remove the emergency call push-button switch, proceed as follows:

1. Remove both Phillips-head screws retaining pushbutton switch plate to wall.
2. Remove steel plate located on L.H. side of pushbutton switch.
3. Remove switch through this opening, taking care to disconnect electric wires.

6.7 FRESH WATER TANK

The fresh water tank located at rear of lavatory wall (over cleaning cabinet), supplies water to the washbasin by gravity. Two tubes are connected in the upper section of tank (Figure 27). One serves as overflow as well as vent tube and runs along the wall to the underside of the lavatory close to the engine air filter housing, while the other tube is connected to the fresh water fill valve which is mounted besides the engine oil reserve tank.

A third tube connected in the lower section of fresh water tank is provided with a T-connector and allows fresh water to flow to the washbasin faucet and to the low temperature water safety valve for automatic or manual draining. An access panel, located at rear of last R.H. side row of seats and secured in place using 6 Phillips-head screws, allow access to the cleaning cabinet and fresh water tank tubing, fresh water tank heater and different wiring connectors.

6.7.1 Fresh Water Tank Heater (Optional)

75 watts, 110 volts AC immersion-type water heater may have been installed in the bottom of the fresh water tank. The heated portion of element must be immersed at all times to ensure proper heater life. The 110-120 volts in-station connector mounted on the engine compartment rear door provides the water heater power source.

6.7.2 Fresh Water Tank Draining

The fresh water tank can be drained by simply opening the fresh water drain cock (Figure 27). Don't forget to close cock when draining is done.

Caution: *If fresh water tank heater is inoperative or not installed on your vehicle, water should be drained from reservoir under cold weather conditions since it might freeze and damage both reservoir and connecting links.*

6.7.3 Fresh Water Tank Filling

Plug the fresh water supply hose to the fresh water tank fill connection (Figure 27); fill the tank until the overflow tube leaks, signaling that tank is full.

Warning: *Never put antifreeze in fresh water tank; antifreeze is toxic.*
Warning: *If tank has not been drained for an extended period of time, draining and filling operations must be repeated three (3) times in order to clean tank and eliminate contaminated water.*

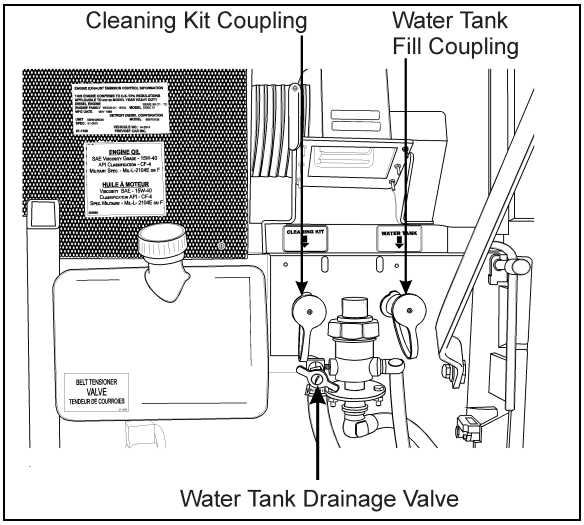

FIGURE 25: FRESH WATER TANK SERVICE VALVES

6.8 LIQUID SOAP DISPENSER

A liquid soap dispenser may have been installed as optional equipment. To refill dispenser, proceed as follows:

1. Turn cover slightly clockwise until it stops.

2. Insert projection at end of *"BOBRICK"* key into rectangular hole in cover (Figure 25). Push straight in. While holding *"BOBRICK"* key in, turn cover counterclockwise about 1/8 turn.

Caution: *Do not use "BOBRICK" key to turn cover.*

3. Lift out piston and spout, cover and supply tube.

4. Fill dispenser with soap. This model can dispense vegetable oil soaps, synthetic detergents, and lotion soaps.

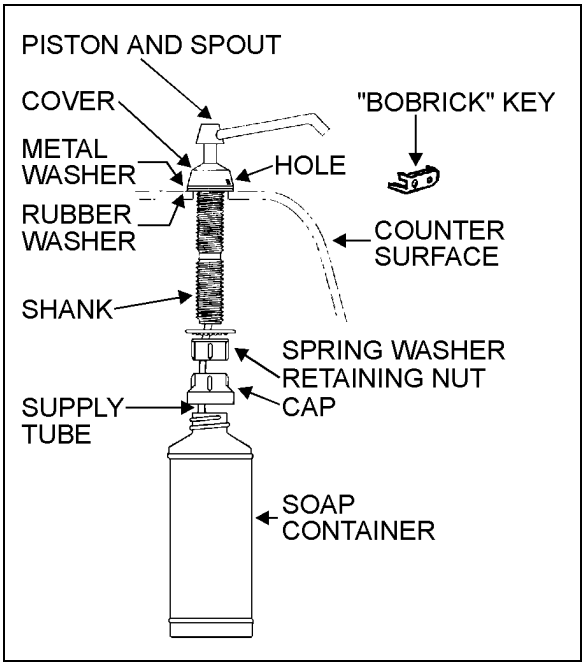

FIGURE 26: LIQUID SOAP DISPENSER **23039**

Caution: *Never use abrasive cleaners.*

5. Replace supply tube, piston, and spout mechanism reversing the steps above.
6. Secure the cover by turning clockwise until lock snaps into position.

Note: *The dispenser requires priming when extremely viscous lotion soaps are used. Remove piston and spout, cover and supply tube assembly. Pump water into assembly, then replace into dispenser.*

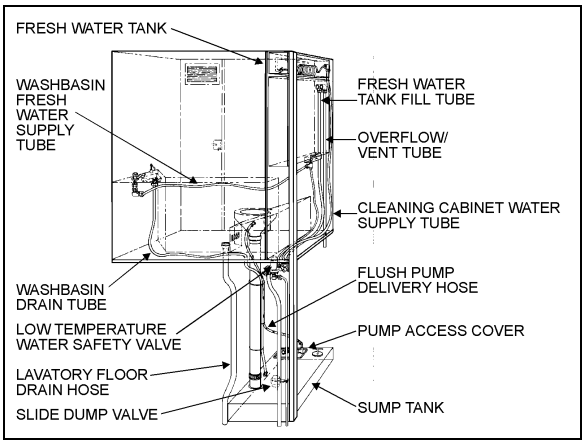

FIGURE 27: FUNCTIONING OF LAVATORY **23038**

6.9 FLUSH PUSH-BUTTON

The green flush push-button is located near the toilet. Press on push-button to actuate a pneumatic timer located on the other side of wall. This timer allows an electric current flow during a preset time to a pump into the sump tank.

6.9.1 Pneumatic Timer Removal and Installation

1. Unscrew and remove the flush push-button locking ring.
2. Remove steel plate located on L.H. side of pushbutton switch.
3. Remove pneumatic timer through this opening, taking care to disconnect electric wires.

Note: *Care must be taken to avoid losing the spacers installed on the mounting sleeve.*

4. Reverse the above procedure to reinstall timer. Tighten lock nut:

6.9.2 Timer Adjustment

Timer can be adjusted from 0.2 second to 3 minutes by turning the time adjustment screw clockwise to increase time, and counterclockwise to decrease time. To gain access to the time adjustment screw, repeat steps 1, 2 and 3 in the previous paragraph "*6.10.1 Pneumatic Timer Removal and Installation*".

6.10 FLUSH PUMP

The submersible-type flush pump is mounted inside an enclosure in the sump tank (Figure 28). The enclosure is provided with a screened side which,

serves as a strainer to prevent solid matters from entering the pump.

The pump requires no periodic maintenance other than cleaning of the strainer side using a water jet introduced through the circular cap opening, once the sump tank is completely drained. The pump can run dry periodically without damage. However, for maximum seal life, the run dry periods should be kept to a minimum.

Caution: *If vehicle is stored for an extended period of time, make sure to clean the strainer as solid matter will tend to pack, and will necessitate replacement of strainer.*

6.10.1 Flush Pump Pressure Adjustment

The flush pump is provided with a manually-adjustable control valve mounted on the flush pump enclosure cover and serves to limit the flush pump output pressure. To adjust, ask an assistant to activate the flush pushbutton and check the liquid projection while you manually adjust the control valve

6.11 SUMP TANK

6.11.1 Sump Tank Draining

To drain sump tank, unscrew cap a few turns then turn drain valve handle CCW. Flush tank and pump cage with clean water. Close drain valve by turning handle CW.

Caution: *The lavatory should be serviced by maintenance personnel after emergency draining. Lavatory tanks should be serviced only at suitably equipped stations.*

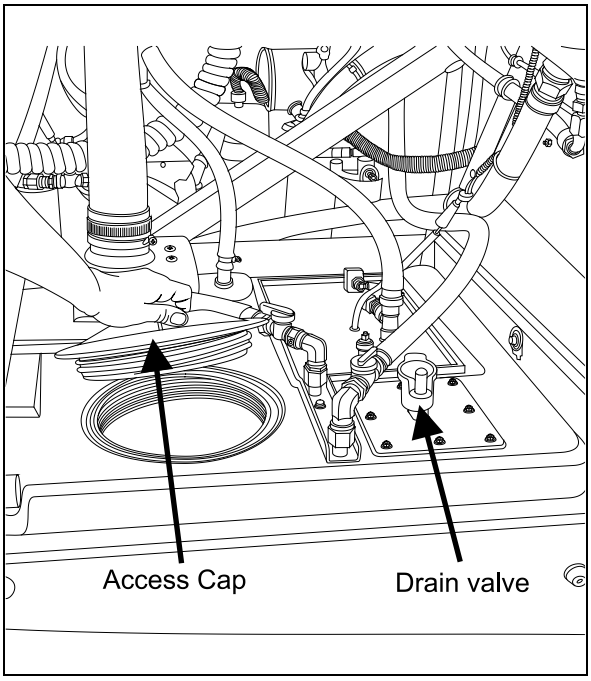

FIGURE 28: SUMP TANK 23294

6.11.2 Sump Tank Filling

Remove cap on sump tank. Fill Tank with 2 gallons (9 liters) of antifreeze and two gallons of water.

Caution: *Do not overfill sump tank.*

Note: *The antifreeze solution in the sump tank will be diluted by fresh water coming from the lavatory sink. Regular maintenance of the sump tank is required to prevent freezing.*

6.12 CLEANING CABINET

A coiled hose located in the cleaning cabinet above the toilet can be used during lavatory cleaning. To use, connect a fresh water supply to the "Hansen" quick-release coupling, identified as "Cleaning Kit", located besides the engine oil reserve tank (Figure 27). To prevent freezing during cold weather, drain the hose after every use. To drain the hose, uncoil and open the nozzle near the lavatory floor drain. Have an assistant push on the spring ball of the quick-release coupling to allow air into the system.

7. AIR HORN VALVE

The air horn valve is located in the front service compartment and the air horn valve button is on the steering wheel center.

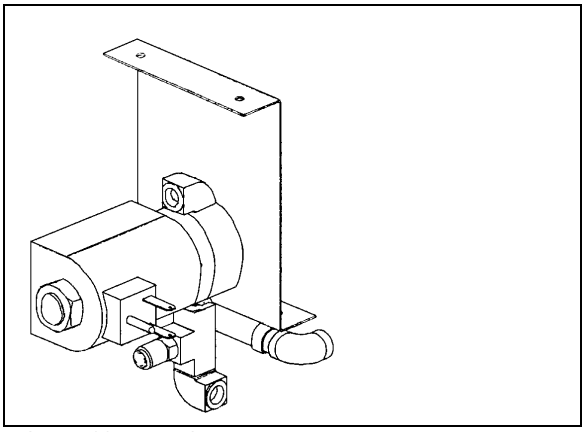

FIGURE 29: AIR HORN VALVE 23230

7.1 AIR HORN VALVE MAINTENANCE

When needed, the air horn valve can be serviced or replaced using the following procedure:

1. Unplug the cable connector;
2. Disconnect the air tubes;
3. Loosen the retaining bolts;
5. Service or replace the air horn valve;
6. Reinstall by reversing procedure.

8. HEADLIGHTS CLEANING SYSTEM

8.1 GENERAL DESCRIPTION

Note: *When inspecting the headlights cleaning system, check the washer fluid hoses, fittings and connectors to be sure they are properly connected and seal with no restriction to the flow of washer fluid. Check that the washer nozzles are properly aimed.*

The headlights cleaning system is independent from the windshield washer system and has its own washer fluid reservoir located in the front electrical and service compartment. However, this system shares the same switch than the upper windshield washer (refer to Operator or Owner's manual for operation). Each pressing of this switch produces 2 successive 0.7 seconds jets.

⚠ CAUTION ⚠

Do not operate the headlights washer while the washer fluid reservoir is empty.

This may damage the washer fluid pump.

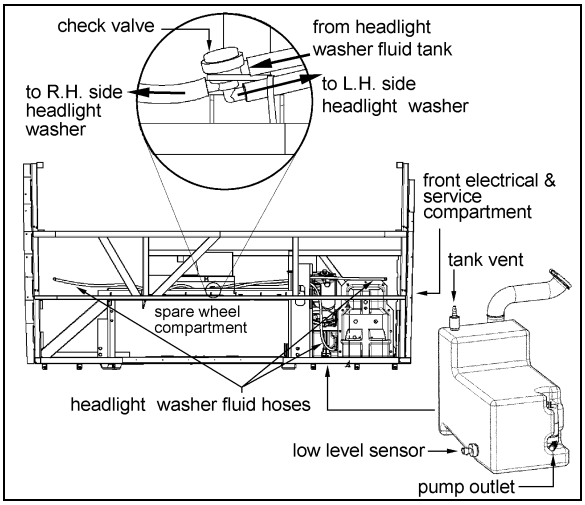

FIGURE 30: HEADLIGHT CLEANING SYSTEM 23361

8.2 WASHER FLUID REFILLING

Open the filler neck cap and had regular windshield washer fluid as required. The tank has a capacity of 10 liters (2.6 US gallons). You may use water or windshield washer fluid as well but, during cold weather days, use windshield washer fluid suitable for freezing temperature only.

8.3 WASHER NOZZLES ADJUSTMENT

To avoid waste of washer fluid, assure the fluid jets are properly aimed. Adjust nozzles so they aim as described in figure 31. Align the jet adjustment tool #800377 with the reference line shown on the front view detail. As seen on the side view, position the adjustment tool vertically for proper aiming.

⚠ CAUTION ⚠

Because they are made of plastic, firmly tighten nozzle and bulkhead fittings by hand only.

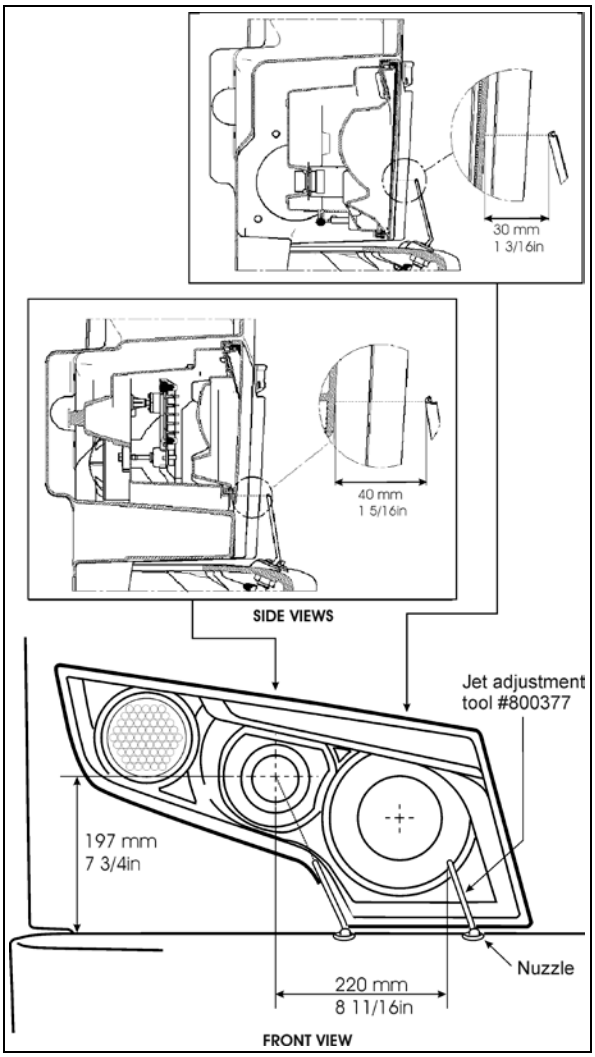

FIGURE 31: WASHER NOZZLES ADJUSTMENT 23386

9. WINDSHIELD WIPERS AND WASHERS

9.1 GENERAL DESCRIPTION

Note: *When installing a wiper motor, arm or blade, follow recommended procedures to prevent misalignment, binding or malfunction. Check the windshield washer liquid hoses, fittings and connectors to be sure they are properly connected and seal with no restriction to the flow of washer liquid. Check that wiper arms have the proper sweep position and the washer nozzles are aimed so that spray is within the proper wiper pattern.*

The windshield wipers are controlled by two electric wiper motors that are accessible for maintenance after raising the appropriate access panel at the front of the coach (refer to figure 32).

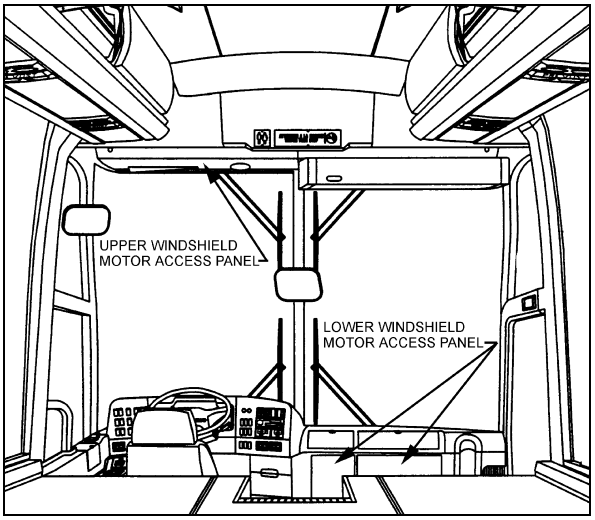

FIGURE 32: WIPER MOTORS LOCATION 23319

Each wiper motor is independently operated:

Depress the upper windshield wiper switch located on the dashboard L.H. side to the first position for intermittent wiping, and to the second position for continuous wiping (Figure 33).

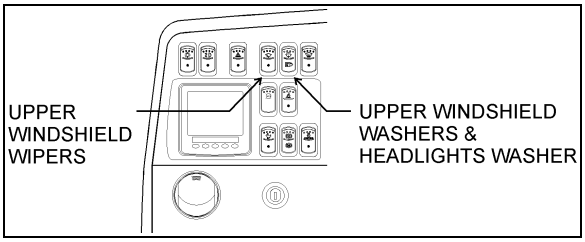

FIGURE 33: DASHBOARD

Rotate the multifunction lever forward to activate lower windshield wipers (arrow 2, Figure 34). The first position operates the wipers at low speed and the second position operates the wipers at high speed. Turning the lever backwards will operate the wipers in the intermittent mode.

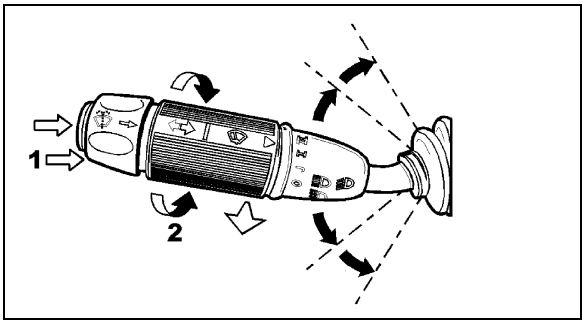

FIGURE 34: MULTIFUNCTION LEVER 23133

Each windshield washer pump is independently operated:

To activate the upper windshield washer pump, depress and hold the top of the rocker switch on dashboard L.H. side (Figure 33). The upper wipers will come on automatically and will shut off a few seconds after releasing the rocker switch.
The lower windshield washer pump is electrically operated and is controlled by a washer control ring on the multifunction lever (item 1, Figure 34).

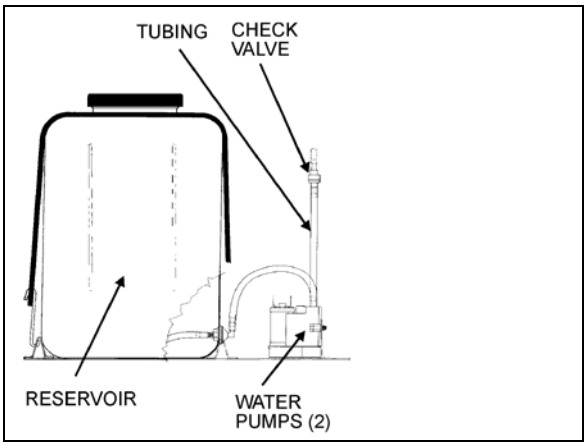

FIGURE 35: WINDSHIELD WASHER RESERVOIR
23085

The windshield washer reservoir is located in the front service compartment (Figure 35). This unit pumps the washer liquid to the spray nozzles where it is dispersed across the windshield. Adjust nozzles with a flat tip screwdriver as needed to get proper spray coverage.

9.2 WIPER ARM

Check operation of the wipers for proper blade sweep and angle.

Caution: *Do not attempt to manually move the wiper arms to make wiper blade sweep adjustments as damage to the wiper linkage or motor may occur. If it is necessary to adjust the sweep of blades, remove the arms and make adjustment by positioning the arms using serration on the wiper arm pivot shafts.*

9.2.1 Sweep Adjustment

On a dry windshield, to avoid possible damage to the arm assembly or wiper motors, hold the wiper arms away from the windshield by inserting a small nail, or other such object, through the holes at the base of each wiper arm specially drilled for this purpose.

Sweep adjustment is a rough adjustment. It must be followed by lower and upper linkage adjustment. See paragraph 10.3 and 10.4.

In order to obtain the sweep adjustment, it may be necessary to remove and reposition the wiper arms, proceed as follows:

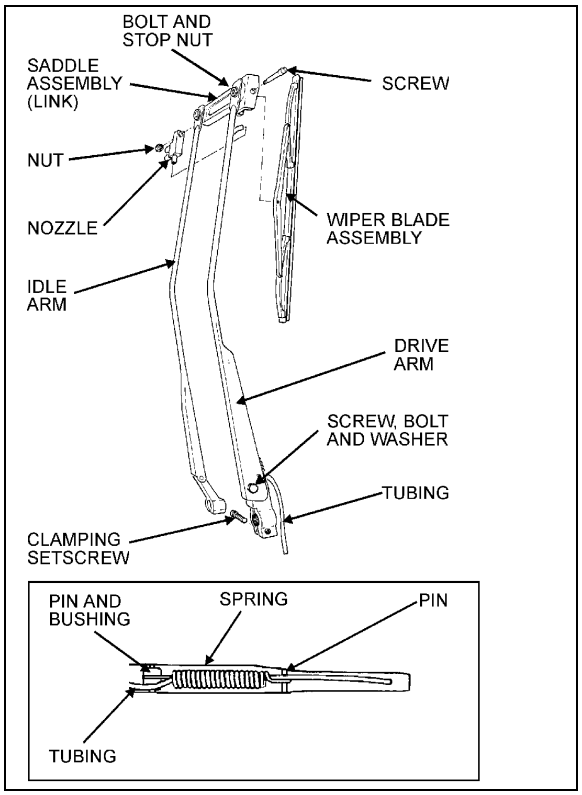

FIGURE 36: LOWER WINDSHIELD WIPER **23086**

1. Remove the cap nuts from the wiper arm pivot shafts (Figure 36 & Figure 37);
2. Disconnect the windshield washer tubing at the base of the wiper arm;
3. Lower windshield wiper: loosen the clamping set screw securing the drive arm to the knurled arm pivot shaft;
4. Remove the drive and idler arms or arm assembly;
5. Relocate the drive arm or arm assembly on its knurled pivot shaft to obtain the desired position;
6. Lower windshield wiper. Tighten the clamping set screw to secure the drive arm to the knurled shaft. Fit the idler arm onto the idler pivot shaft.

   TORQUE: 120-130 lb-ft (163-176 Nm)

7. Install the pivot shafts cap nuts.

   Drive arm pivot nut:

   TORQUE: 20-24 lb-in (2.26-2.71 Nm)

Idler arm pivot nut :

TORQUE: 90-110 lb-in (10-12 Nm)

8. Connect the windshield washer tubing at the base of the wiper arm;
9. Check the adjustment on a wet windshield.

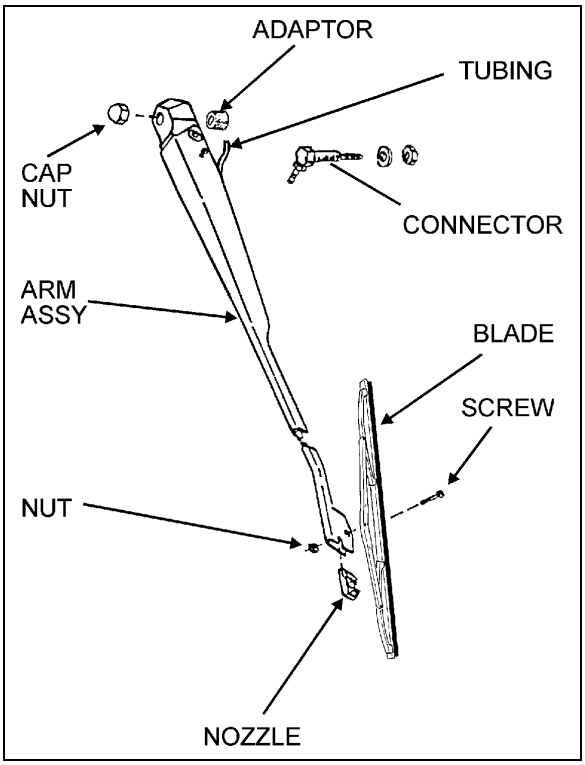

FIGURE 37: UPPER WINDSHIELD WIPER 23087

9.2.2 Removal

1. Remove the cap nuts from;
2. Disconnect the windshield washer tubing at the base of the wiper arm;
3. Mark the relationship of the arm head to the end of the knurled drive shaft to ensure the original position if the arm is to be reinstalled;
4. Lower windshield wiper: loosen the clamping set screw on the base of the drive arm;
5. Remove the wiper arm assembly.

9.2.3 Installation

1. Make sure the wiper motor is in the stop position. Lower windshield wiper: position the wiper arm on the knurled drive shaft and idler arm on the pivot shaft. Upper windshield wiper: position the wiper arm assembly on the knurled drive shaft;
2. If the original arm is reinstalled, align the marks made during removal;
3. Operate the wipers on a wet windshield to check the wiper blade sweep and angle. Readjust as necessary;
4. Lower windshield wiper: Tighten clamping nut onto the drive arm. Install cap nuts onto the arm shafts;
5. Connect the windshield washer tubing at the base of the wiper arm;
6. Check the adjustment on a wet windshield.

9.3 LOWER LINKAGE ADJUSTMENT

1. Make sure the wiper motor is in the stop position prior to working on the linkage.
2. Adjust the two pivot shafts vertically.
3. Adjust the rod length of the connecting pivot shafts. During rod length adjustment, maintain the pivot shafts in the vertical position.
4. Adjust the rod located between right pivot shaft and motor to a 40.5^{o} angle (Figure 38). The motor lever must be on the same axis as the rod.
5. Install the right wiper arm in its normal position (in the middle of the windshield). Refer to paragraph ‘’Sweep Adjustment’’.
6. The right wiper arm final adjustment is made by adjusting the smallest rod length.
7. Install the left wiper arm in its normal position (in the middle of the windshield). Refer to paragraph ‘’Sweep Adjustment’’.
8. The left wiper arm final adjustment is made by adjusting the longest rod length.
9. Check the adjustment on a wet windshield.

9.4 UPPER LINKAGE ADJUSTMENT

1. Make sure the wiper motor is in the stop position prior to working on the linkage.
2. Adjust rods length.
3. Install the left wiper arm in its normal position (in the middle of the windshield). Refer to paragraph ‘’Sweep Adjustment’’.
4. The left wiper arm final adjustment is made by adjusting the rod length to 8.46 inches (215 mm).

5. Install the right wiper arm in its normal position (in the middle of the windshield). Refer to paragraph ''Sweep Adjustment''.
6. The right wiper arm final adjustment is made by adjusting the rod length to 23.54 inches (598 mm).
7. Check the adjustment on a wet windshield

9.5 WINDSHIELD WIPER MOTORS

9.5.1 Lower Windshield Wiper Motor Replacement

The lower windshield wiper motor is located at lower front of the vehicle, behind the defroster panel. Refer to figure 32 for motor location.

Warning: *Park vehicle safely, apply parking brake, stop engine and set battery master switch to the ''OFF'' position prior to working on the vehicle.*

1. Remove the two Phillips-head screws retaining the defroster panel, and remove panel.
2. Disconnect wiring connector from the windshield wiper motor.
3. Loosen clamping screw retaining the lever at the end of the motor driving shaft.
4. Remove the three bolts holding the motor to the steel plate.
5. Remove the windshield wiper motor (Prevost #800304), reverse removal procedure to reinstall.

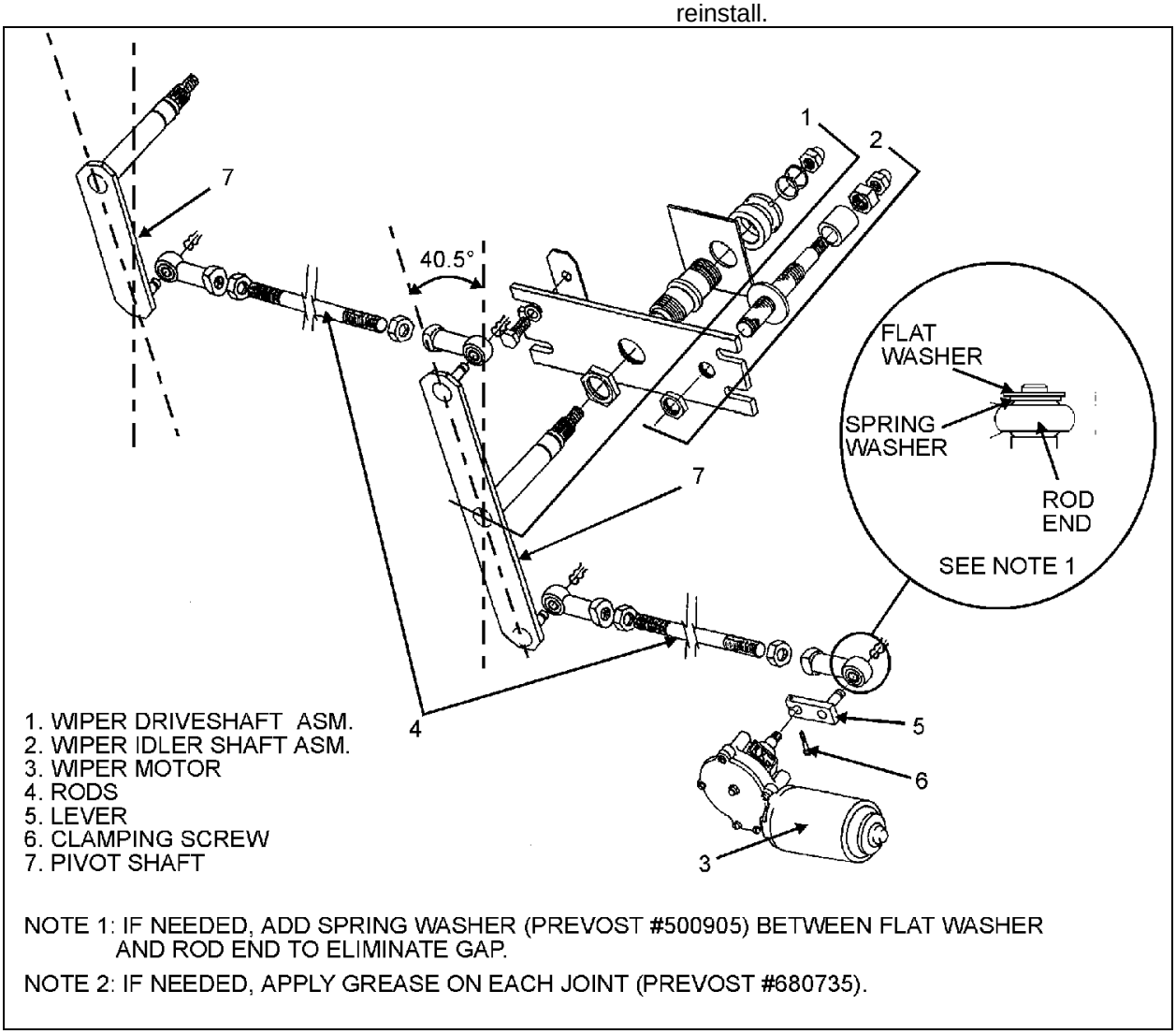

FIGURE 38: LOWER WINDSHIELD WIPER INSTALLATION **23088**

9.5.2 Upper Windshield Wiper Motor Replacement

The upper windshield wiper motor is located above L.H. upper windshield panel. To remove the motor, it is necessary to remove left sun visor and upper windshield panel.

Warning: *Park vehicle safely, apply parking brake, stop engine and set battery master switch to the "OFF" position prior to working on the vehicle.*

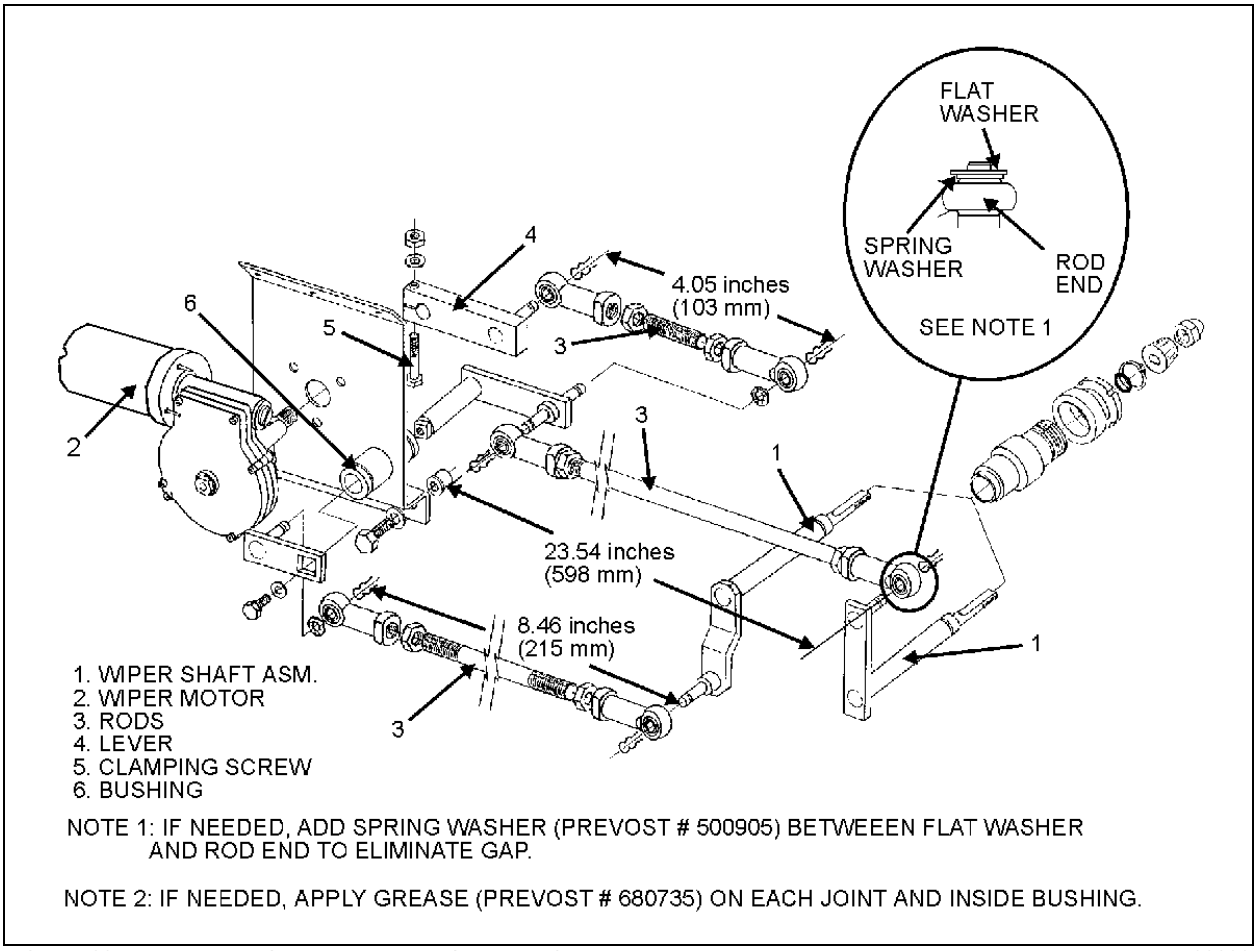

FIGURE 39: UPPER WINDSHIELD WIPER INSTALLATION **23089**

1. Pull out the wiring connector (black and red wires) located on sun visor L.H. side and disconnect.
2. Remove the two Phillips-head screws at the bottom end of the sun visor arms.
3. Remove the two Phillips-head screws on each roller side, pull out the sun visor.
4. Remove the Phillips-head screws retaining the upper windshield panel.
5. If equipped with blower defroster, loosen hose clamp to remove air duct from hose.
6. Disconnect wiring connector from the windshield wiper motor.
7. Loosen the bolt retaining the lever at the end of the motor driving shaft (Figure 39).
8. Remove the three bolts holding the motor to the steel plate.
9. Remove the windshield wiper motor (Prevost #800304), reverse removal procedure to reinstall.

10. AUTOMATIC FIRE SUPPRESSION SYSTEM (AFSS) (OPTIONAL)

This optional system is used to shut down the engine and to extinguish a fire in the engine compartment or in the vicinity of the preheating system if so equipped.

The system operation is fully automatic and does not require assistance from the operator, however if required, the system can be manually activated by the operator at any time.

Refer to Prevost Operator's Manual or Owner's Manual for system operation and operational sequence (fire).

If more information is needed on the system, please refer to Kidde Dual Spectrum "Operation & Maintenance Manual annexed at the end of this section.

10.1 STARTING THE VEHICLE AFTER TRIGGERING OF A FIRE ALARM

The vehicle may be started after a fire alarm without resetting the system. Refer to ignition switch sequence below. This will not reset the system, rather it will instruct the vehicle's multiplex system to ignore vehicle interface outputs from the protection panel. This feature is intended to be used only in emergency situations that require the vehicle to be restarted and moved a short distance prior to system reset. It should not be performed if the cause of the fire has not been clearly identified and corrected.

To start the vehicle, perform this ignition switch (key) sequence:

1. From the on position;
2. Turn to **OFF**, return to **ON** and **START** vehicle within 2 seconds.

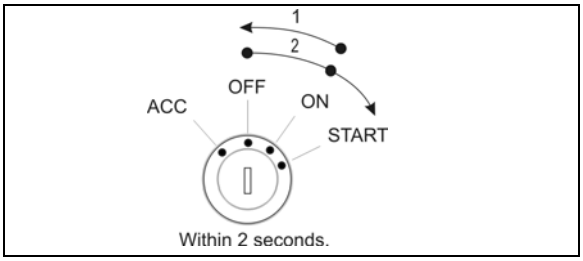

FIGURE 40: IGNITION SWITCH SEQUENCE

10.2 PERIODIC MAINTENANCE

PRE-TRIP

- o Verify that the Protection Panel "SYSTEM OK" lamp is on solid green.

EVERY 3000 MILES OR MONTHLY (whichever comes first)

General

- o Verify that neither the protected equipment nor the hazard has changed.
- o Verify that no obvious physical damage or condition exists that might prevent system operation.

Protection Panel

- o Verify that all warning lamps and the audible alarm are operational by pressing the "TEST/RESET" button.

Manual Activation Switch

- o Verify that the tamper seal is intact and access to the switch is unobstructed.

Fire Detectors

- o Optical
  - Verify that the status lamp on the detector face is on solid green.
  - Verify that nothing is blocking the detector's field of view.

- Verify that the windows on the face of the detector are free of excess contamination (dirt, oil, grease, etc.) – if necessary, clean using a water soaked non-abrasive towel.

o Linear Thermal

- Verify that there is no obvious physical damage and that the unit is free of excess contamination (dirt, oil, grease, etc.) – if necessary, clean using a water soaked non-abrasive towel.
- Verify that mounting is secure and taught.

Electrical Harness

o Verify that electrical connectors and electrical wiring have no visible damage and all connectors are securely seated.

Extinguisher & Distribution System

o Verify that that the extinguisher pressure gauge pointer is in the green arc at room temperature.

o Verify that distribution piping and nozzles are intact and unobstructed and that nozzle blow-off caps are in place.

EVERY 18000 MILES OR SEMI-ANNUALLY (whichever comes first)

o Perform a comprehensive fire system test using a Kidde Dual Spectrum System Test Set (Optical Test Kit P/N 420871-2).

o Service the extinguisher in accordance with KDS Document 160296, “KDS Pre-Engineered Fire Suppression System: Installation, Operation and Maintenance Manual”.

MAINTENANCE

EVERY SIX YEARS

Have the fire extinguisher rebuilt by a qualified fire protection equipment company familiar with Kidde Dual Spectrum equipment and in accordance with KDS Document 160296, “KDS Pre-Engineered Fire Suppression System: Installation, Operation and Maintenance Manual”. Rebuilt shall include actuator, O-ring seals and dry chemical replacement.

MAINTENANCE

EVERY TWELVE YEARS

Have the Extinguisher cylinder hydrostatically tested by a qualified fire protection equipment company familiar with Kidde Dual Spectrum equipment and in accordance with KDS Document 160296, “KDS Pre-Engineered Fire Suppression System: Installation, Operation and Maintenance Manual”.

11. TIRE PRESSURE MONITORING SYSTEM (TPMS)

The optional active tire pressure and temperature monitoring system is a sensing device designed to identify and display tire operating data and activate an alert or warning when pressure or temperature irregularities are detected.

For more information on the operation and troubleshooting of the system, refer to the Operator’s Manual, chapters “Controls and Instruments” and “Safety Features and Equipment”.

CONTENTS

1. TORQUE TABLES 3

2. DESCRIPTION OF AUDIO AND VIDEO SYSTEM INSTALLED ON X3-45 COACHES 4

2.1 HOW TO RECEIVE SERVICE FOR YOUR REI AUDIO AND VIDEO PRODUCTS 7
2.2 DASHBOARD AM/FM RADIO 9
2.3 VSS-05 SOUND SELECTOR 9
2.4 VD-404 MOBILE DVD PLAYER 9
2.5 MULTICHANNEL POWER AMPLIFIER VA400.8 10
2.6 SPEAKERS 10
2.7 BOOM-TYPE MICROPHONE 10
2.7.1 Removal 11
2.7.2 Installation 11
2.8 HANDHELD PRIORITY MICROPHONE 11
2.9 WIRELESS MICROPHONE 11
2.10 TV TUNER 11
2.11 KARAOKE 11
2.11.1 Karaoke Panasonic Sound System – MOBILE DVD PLAYER DV1500 12
2.12 DRIVER'S SPEAKERS 12
2.13 MONITOR 12
2.14 SCENIC VIEWING SYSTEM 12
2.15 ROOF ANTENNA INSTALLATION 12

3. BACK-UP CAMERA AND MONITOR 12

4. HUBODOMETER 15

4.1 DESCRIPTION 15
4.2 OPERATION 15
4.3 REMOVAL 15
4.4 INSTALLATION 15

5. ELECTRONIC DESTINATION SIGN INSTALLED ON X3-45 COACHES (OPTIONAL) 15

6. SUNSHADES 16

6.1 WINDSHIELD SUNSHADES 16
6.1.1 End of Stroke Adjustment 16
6.2 PASSENGER SUNSHADES 17
6.2.1 Preload Adjustment 17

7. LAVATORY INSTALLED ON X3-45 COACHES 17

7.1 DESCRIPTION 17
7.2 MAINTENANCE 17
7.3 VENTILATION FAN 19
7.3.1 Description 19
7.3.2 Maintenance 19
7.3.3 Removal and Installation 19
7.4 DOOR LOCK 19
7.5 LAVATORY LIGHT & NIGHT-LIGHT 20
7.6 EMERGENCY BUTTON 20
7.7 FLUSH PUSH-BUTTON 21

7.7.1 Flush push button removal and installation 21
7.8 FLUSH PUMP 21
7.8.1 Flush Pump Removal 21
7.9 SUMP TANK 21
7.9.1 Sump Tank Draining 22
7.9.2 Sump Tank Filling 22

8. HORN INSTALLATION 22

8.1 ELECTRIC OR AIR HORN MAINTENANCE 22

9. HEADLIGHTS CLEANING SYSTEM 23

9.1 GENERAL DESCRIPTION 23
9.2 WASHER FLUID REFILLING 23
9.3 WASHER NOZZLES ADJUSTMENT 23

10. WINDSHIELD WIPERS AND WASHERS 24

10.1 GENERAL DESCRIPTION 24
10.2 WIPER ARM 24
10.2.1 Wiper Arms Positioning 25
10.3 WINDSHIELD WIPER MOTOR 25
10.3.1 Windshield Wiper Motor Replacement 25
10.4 TROUBLESHOOTING 26

11. TIRE PRESSURE MONITORING SYSTEM (TPMS) 27

12. AUTOMATIC FIRE SUPPRESSION SYSTEM (AFSS) (OPTIONAL) 27

12.1 STARTING THE VEHICLE AFTER A FIRE ALARM 27
12.2 PERIODIC MAINTENANCE 28

1. TORQUE TABLES

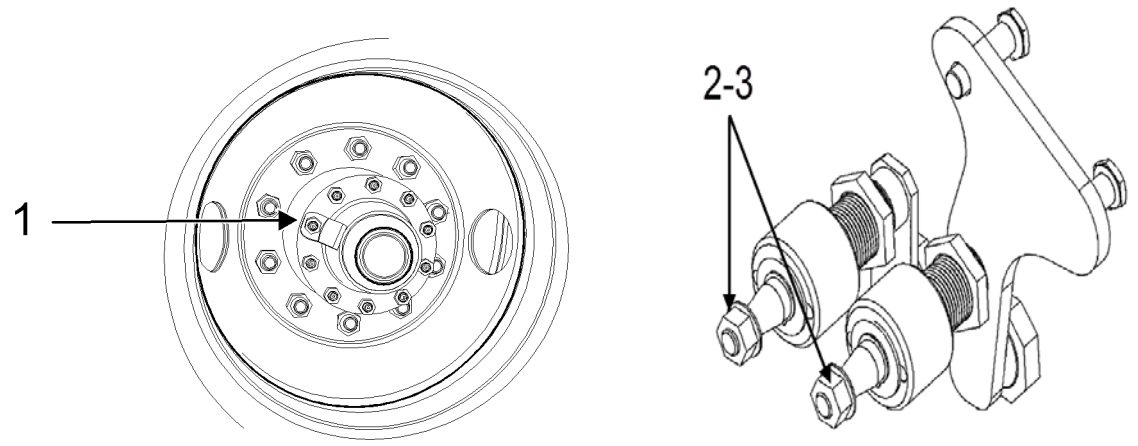

MISCELLANEOUS		
No	DESCRIPTION	TORQUE
1	Hubodometer mounting bolts	110-165 lb-ft (149-224 Nm)
2	Wiper arm mounting bolts (first tightening)	9 lb-ft (12 Nm)
3	Wiper arm mounting bolts (second tightening)	22 lb-ft (30 Nm)

2. DESCRIPTION OF AUDIO AND VIDEO SYSTEM INSTALLED ON X3-45 COACHES

The rack mounted components are gathered on the audio-video panel which is located in the first driver's side overhead compartment (Figure 1). In addition to the power amplifier, options for AM/FM radio, satellite radio, karaoke, wireless microphone, DVD, scenic view and back-up camera system and GPS Navigation System module may be featured.

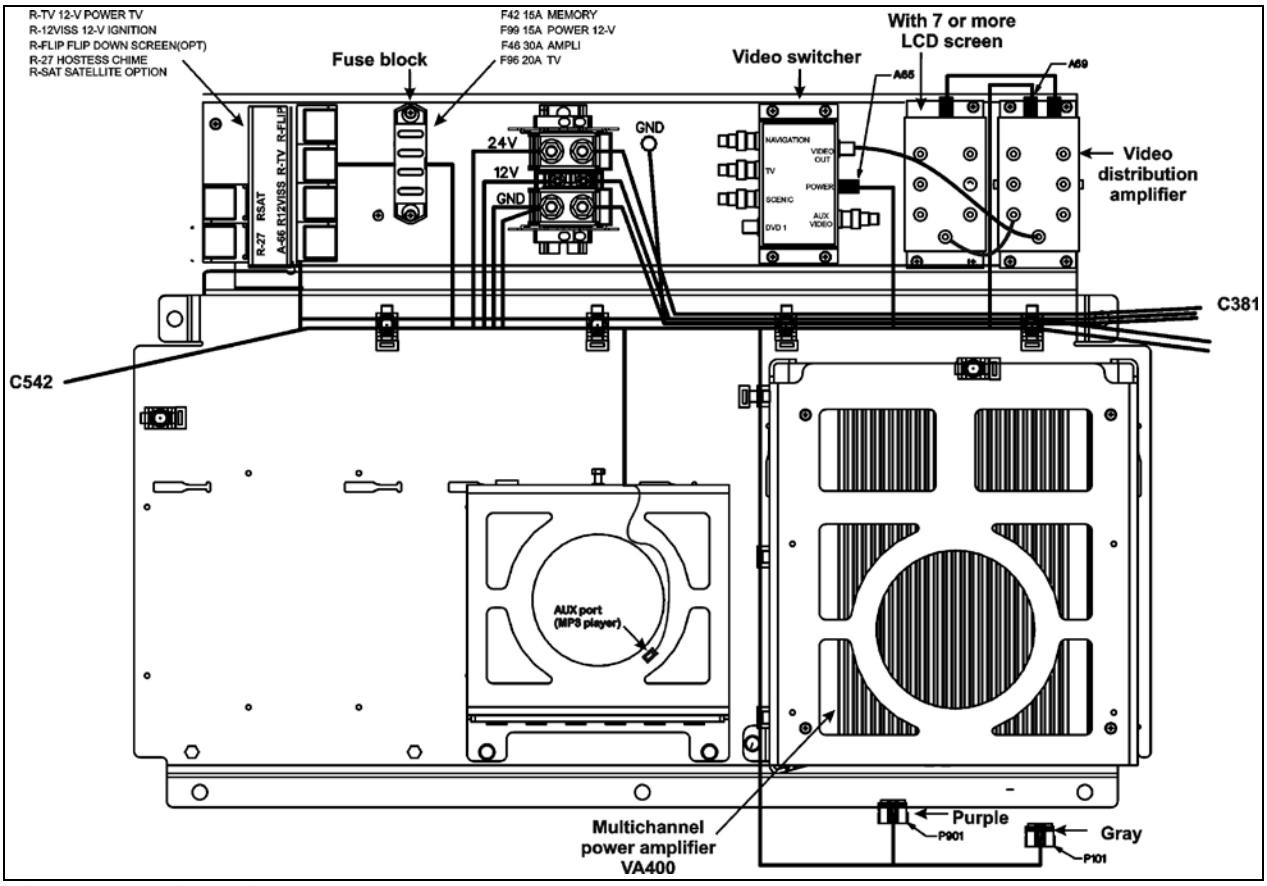

FIGURE 1 : AUDIO-VIDEO PANEL

Each service module mounted to the underside of the parcel racks contains a 40-watt speaker. The speakers in the passenger section are wired in stereo and are powered by the amplifier. A microphone outlet mounted in the driver's area is provided as standard equipment.

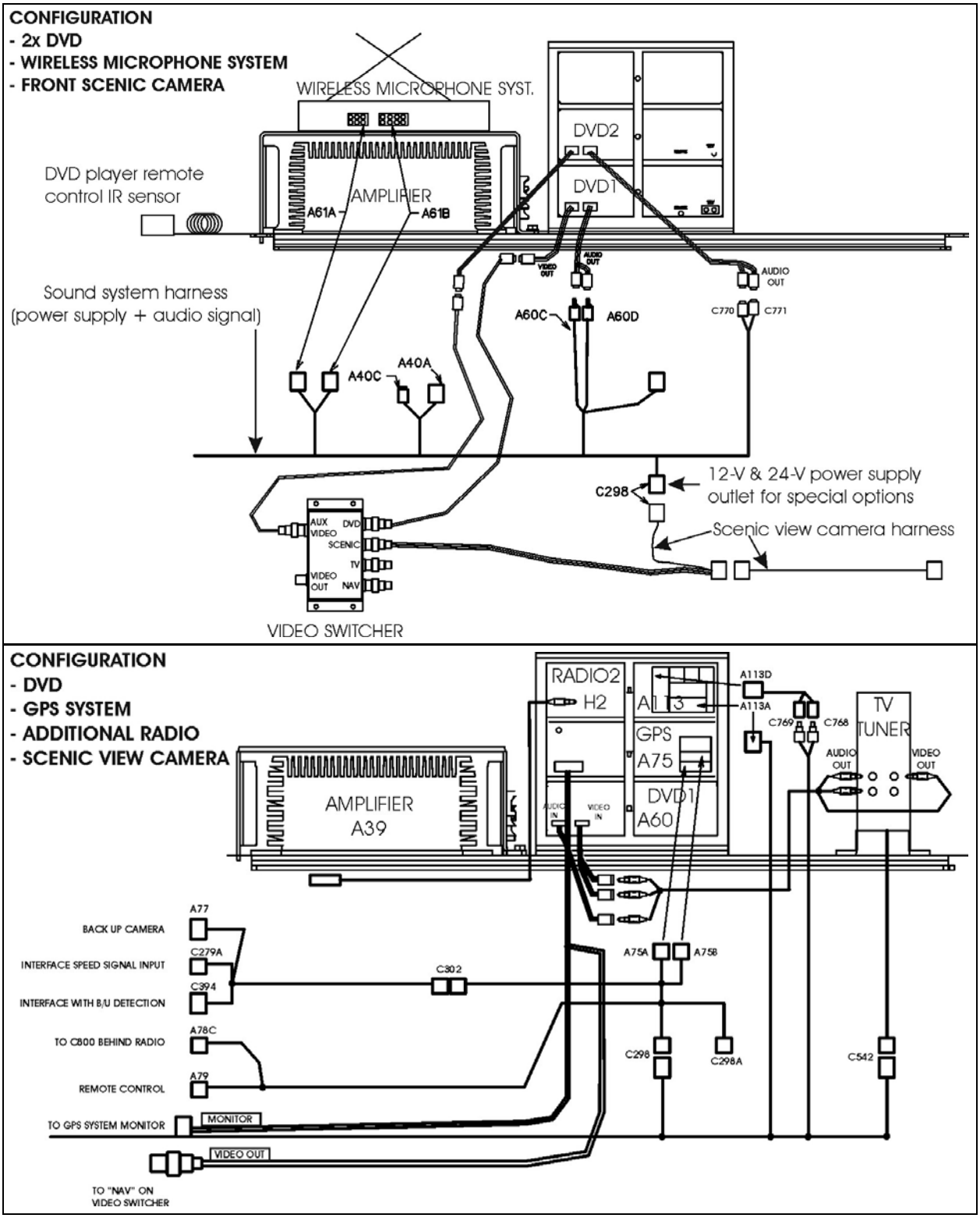

FIGURE 2: AUDIO & VIDEO CONNECTIONS

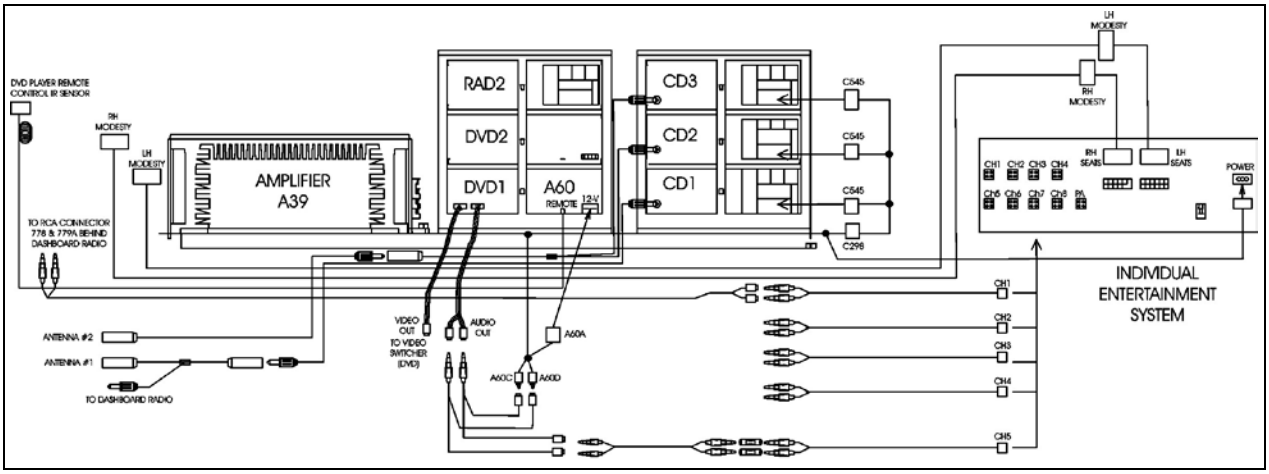

FIGURE 3: AUDIO-VIDEO CONNECTIONS

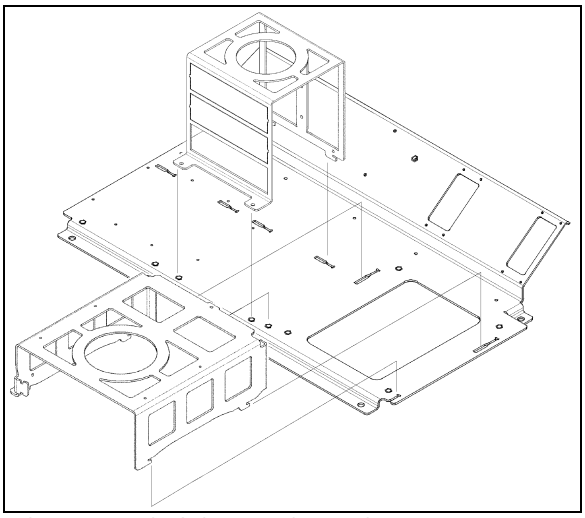

FIGURE 4: RACKS ON AUDIO-VIDEO PANEL 23059

2.1 HOW TO RECEIVE SERVICE FOR YOUR REI AUDIO AND VIDEO PRODUCTS

For assistance in obtaining service for REI products call toll free 877-726-4617 (Continental United States and Canada) between the hours of 7:00 A.M. - 5:00 P.M. CST Monday thru Friday (excluding Holidays).

For assistance in obtaining service for REI products call toll free 877-726-4617 (Continental United States and Canada only) between the hours of 7:00 A.M. - 5:00 P.M. CST Monday thru Friday (excluding Holidays).

Prior to calling REI, please have the part number, serial number, VIN number and detailed description of the problem ready to provide to the REI service representative. After providing information to REI, customers will be issued a return authorization number. When the REI service representative provides the return authorization number, they will also give instructions for returning the item. Any discrepancies in following this procedure may cause delays in the process.

24/7 Tech Support

CALL 1-877-726-4617

E-Mail to technicalsupport@radioeng.com

REI Authorized Repair Facilities

REI
6534 L Street
Omaha, Nebraska 68117

REI
1376 Bennett Drive, Unit 126
Longwood, Florida 32750

REI products that may be installed in your coach:

MONITOR, LCD 10.4”
MONITOR, COLOR BACK-UP CAMERA
MONITOR, LCD 15.4”
MONITOR, CENTRAL LCD 15.4”
MONITOR, FLIP19”
MONITOR, 16:9 LCD 15.4”
MONITOR, 16:9 CENTRAL LCD 19”
INDIVIDUAL ENTERTAINMENT SYSTEM
AMPLIFIER, 8-CHANNEL
DVD PLAYER
DVD REMOTE CONTROL
CAMERA, COLOR BACK-UP
CAMERA, COLOR PANORAMIC
MICROPHONE, 10” CB TYPE
MICROPHONE, WIRELESS
RECEIVER, WIRELESS MIC 16-CHANNEL

2.2 DASHBOARD AM/FM RADIO

FIGURE 5: DASHBOARD AM/FM RADIO

NOTE
Before attempting to solve an electrical problem on the sound system, refer to the wiring diagrams.

The radio operating instructions manual is included at the end of this section.

- Removal/Installation

To remove the radio from its location, proceed as follows:

- Place the ignition switch in the ‘‘OFF’’ position.
- Remove the dashboard cover.
- Disconnect the electrical cable connectors from radio and unfasten back plate securing nuts/screws.
- To separate the radio from its support, insert the removal tool #20584494 in the holes found each side of the radio front panel.
- Push the unit through the front dashboard panel.
- Install a new unit by reversing the procedure.

NOTE
Remember that because power has been interrupted during removal, the radio must be unlocked by entering the four-digit security code after reinstallation.

2.3 VSS-05 SOUND SELECTOR

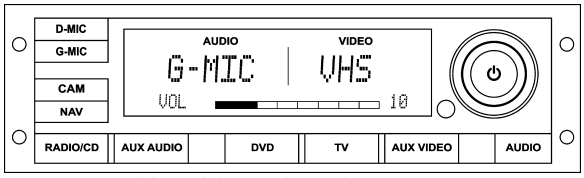

FIGURE 6: VSS-05 SOUND SELECTOR

- Removal/Installation

To remove the Sound Selector from its location, proceed as follows:

* Place the ignition switch in the ‘‘OFF’’ position.
* Remove the dashboard cover.
* Disconnect the electrical connectors from unit and unfasten back plate securing nut/screw.
* To separate the Sound Selector from its support, insert the removal tool #20584494 in the holes found each side of the unit front panel.
* Push the unit through the front dashboard panel.
* Install a new unit by reversing the procedure.

The operating instructions are included in your Operator’s Manual.

2.4 VD-404 MOBILE DVD PLAYER

FIGURE 7: VD-404 MOBILE DVD PLAYER

The MOBILE DVD PLAYER is located in the first parcel compartment on the driver’s side. Instructions for proper use of this unit are included at the end of this section.

Features:

- POWER

  Operating voltage: 12-volt DC

- COMPATIBILITY

  This DVD player can play the following disc formats:
  DVD, CD, VCD, DVCD, MP3, CD-R, CD-RW

- SYSTEM FUNCTIONS

  Video output system: system MULTI, NTSC or PAL switchable.

1 L/R audio output
1 L/R audio input
1 AUX video output
1 rear camera video input
3 video outputs with one dedicated self-switching rear view monitor

- ADDITIONAL VIDEO FEATURES

Multi-angle, multi-view, multi-audio function, multi-level forward and backward motion, play position memory, resume stop and repeat function.

2.5 MULTICHANNEL POWER AMPLIFIER VA400.8

This 400-watt, 6-channels brings an added dimension to your stereo equipment and increases the total output of the system.

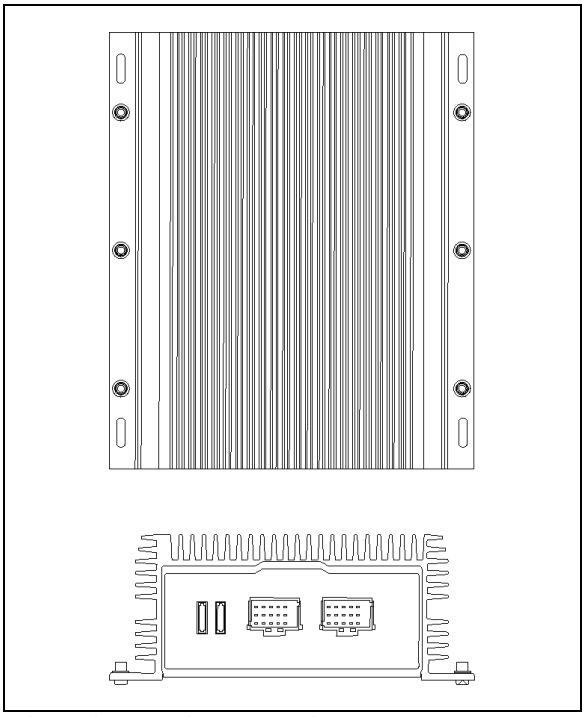

FIGURE 8: MULTICHANNEL POWER AMPLIFIER

For optimum sound quality, adjust the subwoofer crossover filter as shown on figure 9. This adjustment is necessary to balance the subwoofers volume in respect to the other speakers and also to cut high frequencies for a better sound quality.

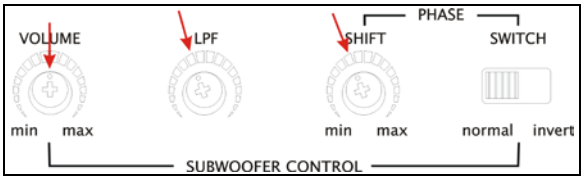

FIGURE 9: CROSSOVER ADJUSTMENT

2.6 SPEAKERS

Each passenger's overhead console mounted to the underside of the parcel racks contains a 20-watt Dual cone or coaxial 10cm speaker. The speakers in the passenger's section, wired in stereo and arranged in a delta configuration are powered by the amplifier.

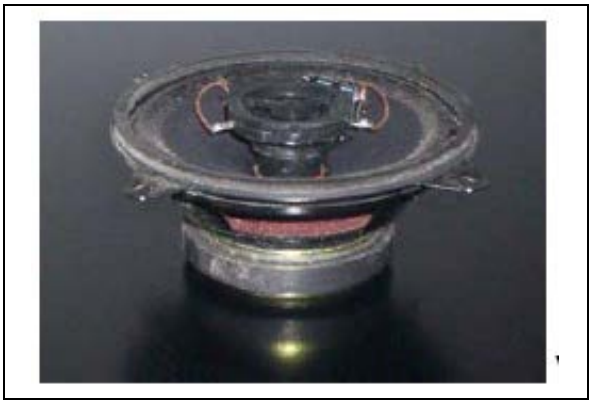

FIGURE 10: 10CM COAXIAL SPEAKER

The vehicle may be equipped with two additional Hi-Fi speakers in the driver's area, mounted one on each side. This arrangement provides the driver with clear stereo sound. Controls for the driver's audio are performed through the dashboard AM/FM radio.

Two specially designed subwoofers may be fixed as an option under a passenger seat with anti-vibration supports.

2.7 BOOM-TYPE MICROPHONE

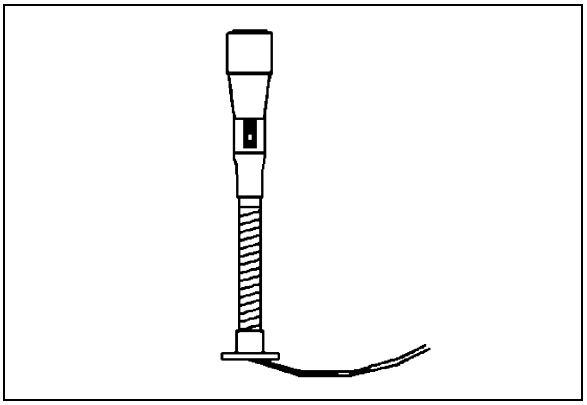

FIGURE 11: BOOM-TYPE MICROPHONE 23083

2.7.1 Removal

1. Place the ignition switch in the ‘‘OFF’’ position.
2. Remove the mounting screws at mounting flange.
3. Disconnect wiring.

2.7.2 Installation

1. Reconnect wiring.
2. Align mounting flange with holes and install screws.
3. Remove spacer block mounting screws.
4. Insert spacer block and install mounting screws.
5. Place the ignition switch in the ‘‘ON’’ position.

2.8 HANDHELD PRIORITY MICROPHONE

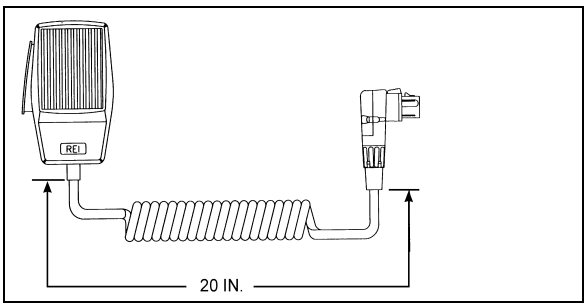

FIGURE 12: HANDHELD PRIORITY MICROPHONE 23216

2.9 WIRELESS MICROPHONE

The system 2000 16 channel wireless microphone, Receiver and Charging Cradle are custom designed units that allow for wireless PA communication from anywhere on the coach. The unit consists of a receiver mounted in the parcel area directly behind the driver, and a rechargeable hand-held microphone and charging unit. Instructions for proper use of the microphone are included in the *‘‘REI Operating Manual’’* which is provided in the technical publications box delivered with the vehicle.

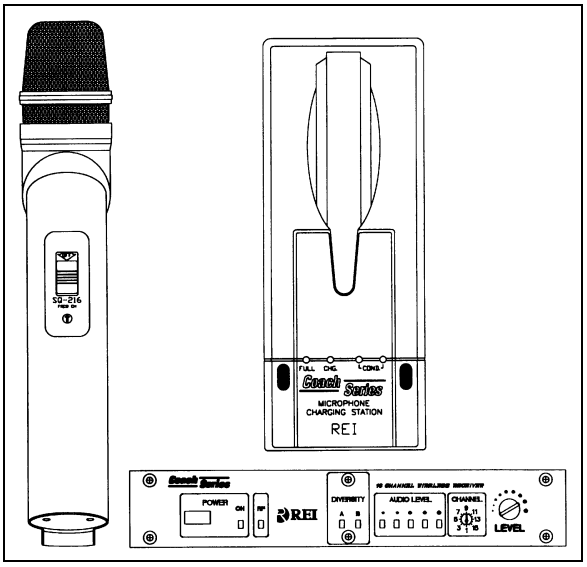

FIGURE 13: WIRELESS MICROPHONE

2.10 TV TUNER

For TV tuner control descriptions, refer to Figure 14.

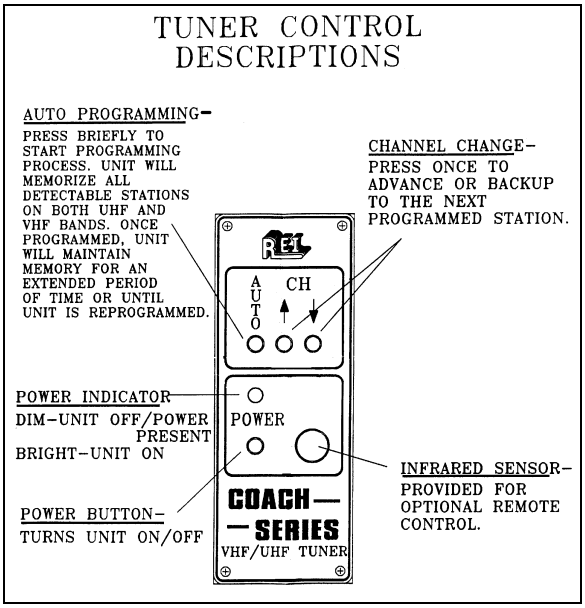

FIGURE 14: TUNER CONTROLS DESCRIPTION

2.11 KARAOKE

The modified Panasonic DVD Player powers up automatically when the video system is activated. The unit can be controlled with the plug-in remote control, or the control head, which has access to the PLAY and STOP commands.

If so equipped, instructions for proper use of the Karaoke system are included in the *‘‘Operating*

Manual" that is provided in the technical publications box delivered with the vehicle.

2.11.1 Karaoke Panasonic Sound System – MOBILE DVD PLAYER DV1500

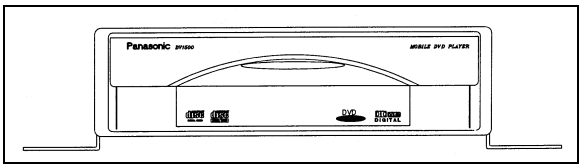

FIGURE 15: PANASONIC DVD PLAYER 1500

2.12 DRIVER'S SPEAKERS

The driver's speakers are mounted one on each side. This arrangement provides the driver with clear stereo sound. Controls for the driver's audio allow selection between the radio and the auxiliary audio (independent of the passenger's speakers) or muting the speakers.

2.13 MONITOR

1. Place the ignition switch in the ''OFF'' position.
2. Unfasten the retaining screw located on the monitor R.H. side.
3. Slide the monitor to the right to release it from the mounting bracket.

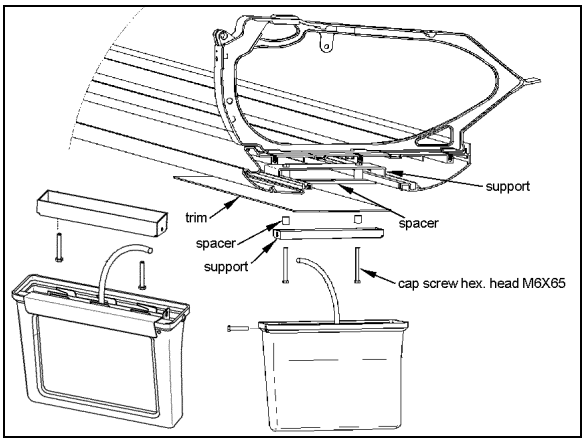

FIGURE 16: MONITOR MOUNTING **23221**

2.14 SCENIC VIEWING SYSTEM

The scenic viewing system enables the passengers to view the road ahead of the vehicle. This system is composed of a camera, a dashboard mounted ON/OFF switch and the video switcher located on the audio-video panel (Figs. 1 & 17).

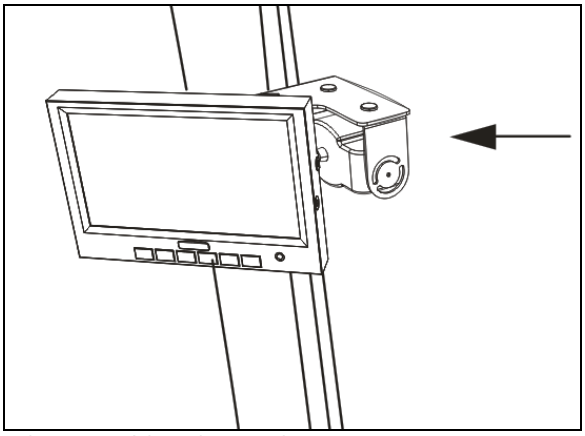

FIGURE 17: SCENIC VIEW CAMERA

2.15 ROOF ANTENNA INSTALLATION

1. Find the desired location and drill a hole according to specification.
2. To remove dirt and grease, wash edge of hole with alcohol.
3. If so equipped, remove foam padding ring from antenna to free the metal surface (foam can produce air bulbs in new rubber seal).
4. With SIKA 205, wash the opening edge and the antenna base surface, wait at least two (2) minutes for chemical evaporation.
5. Apply new seal SIKA 221 on both, vehicle hole edge and antenna base.
6. Fix the antenna in place.
7. Remove excess seal and complete a finishing joint all around the antenna base.

3. BACK-UP CAMERA AND MONITOR

An optional back-up camera is available which provides the driver with visual assistance when backing-up. The camera is automatically activated when the transmission is put in reverse gear and the ignition switch is "ON".

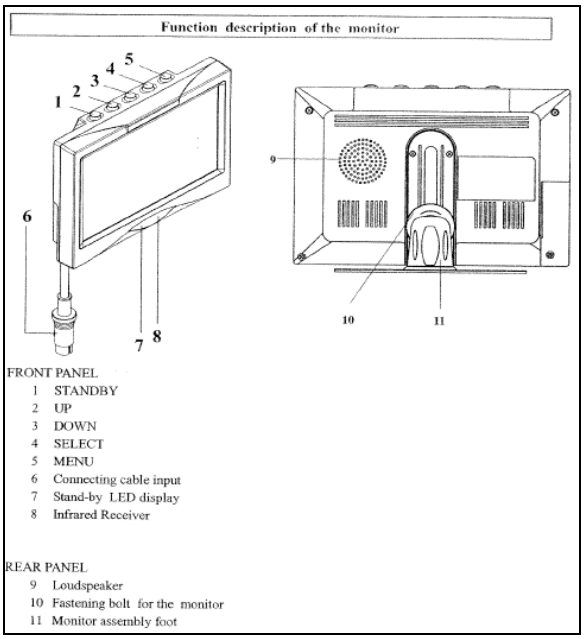

BUTTON DESCRIPTION

1) STANDBY: On/Off switch

2) UP: This key has 3 functions

- Increase of the volume during normal operation;
- Modification of the setting within a function e.g. contrast (after calling up the menu);
- By pressing this key when putting in the reverse gear, the distance markings move upwards;

3) DOWN: This key has 3 functions

- Decrease of the volume during normal operation;
- Modification of the setting within a function e.g. contrast (after calling up the menu);
- By pressing this key when putting in the reverse gear, the distance markings move downwards;

4) SELECT: This key has 3 functions

- Selection of the video sources (CA1→ CA2 → AV → CA1). Press less than 1.5 seconds;
- Selection of the functions e.g. picture setting (after calling up the menu);
- Deleting and calling OSD letters of title & time (press longer than 1.5 seconds) during normal operation;

5) MENU: This key has 2 functions

- Activation of the dimmer function (press less than 1.5 seconds) during normal operation;
- Calling up the menu (press longer than 1.5 seconds, four menus can be called up). Press the key once again to call up the individual menus;
  a) PICTURE= Functions for the image setting;
  b) USER= Selection of the system function;
  c) TIME= Setting time and date;
  d) INSTALL= Setting the camera function (e.g. mirror function);

6) BUSH FOR THE MONITOR CABLE OF THE CONNECTION BOX

7) STANDBY DISPLAY

8) INFRARED RECEIVER

MONITOR MENU DISPLAY

The monitor (RV59 HD) is equipped with an On-Screen Display (OSD) function which displays date, camera, channel, mirror mode and distance markings. These functions can be selected on MENU. To calling up the menu, press longer than 1.5 seconds. Four menus can be called up. Press the key once again to call up the individual menus.
For calling up the menu PICTURE press the key **MENU** longer than 1.5 seconds. The menu PICTURE appears.

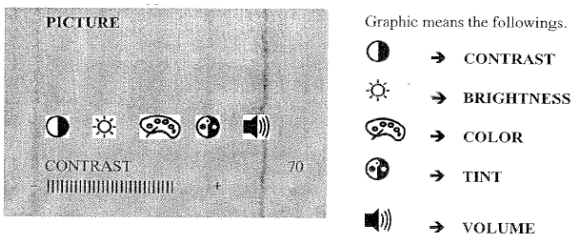

Select the function (e.g. contrast) by pressing the key **SELECT** repeatedly. The setting within the function can be modified with the keys **UP** and **DOWN**.

For calling up the menu USER press the key **MENU** once again. The menu USER appears. Select the function (e.g. SELECTION) by pressing the key **SELECT** repeatedly as necessary. The setting within the function can be modified with the keys **UP** and **DOWN**.

USER	POSSIBLE SETTINGS:
LANGUE ENG	LANGUAGE: ENGLISH/GERMAN (ENG/DEUT)
SCREEN WIDE	SCREEN FORMAT: NOR 4:3, picture format 4:3 WIDE, picture format 16:9 FULL, picture format 16:9 middle enlarge
TITLE ON	TITLE: CAMERA TITLE DISPLAY ON/OFF
TIME ON	TIME: TIME DISPLAY ON/OFF

For calling up the menu TIME press the key **MENU** once again. The menu TIME appears. Select the function (e.g. DATE) by pressing the key **SELECT** repeatedly as necessary. The setting within the function can be modified with the keys **UP** and **DOWN**.

TIME	
TIME	08:25
DATE	MAY01
YEAR	2005

- Hour-Month adjustable by UP BUTTON
- Minute/Date adjustable by DOWN BUTTON
- Year adjustable by UP/DOWN BUTTON

For calling up the menu INSTALL press the key **MENU** once again. The menu TIME appears. Select the function (e.g. SELECTION) by pressing the key **SELECT** repeatedly as necessary. The setting within the function can be modified with the keys **UP** and **DOWN**.

INSTALL	
REAR	CAM1
CAM1	MIR
CAM2	NOR

POSSIBLE SETTINGS:

REAR: Selection of priority camera (CAM1 or CAM2) which is triggered by rear gear.

CAM1: Selection of real picture or mirrored picture for camera 1

CAM2: Selection of real picture or mirrored picture for camera 2

NOTE1 The distance mark will appear on the picture of camera which set as MIR (mirrored).

NOTE2 Engaging the reverse gear, only distance mark will appear on the mirrored camera picture without any OSD. At the moment, no keys are available except UP/DOWN key for moving distance bar.

BACK-UP CAMERA MODULE (Power box)

The connection line consists of 6 branch lines as below:

RED	Voltage supply 12-volt to 24-volt (max. 32-volt)
BLACK/BROWN	Earth cable
WHITE	Control wire for switching on the dimmer function (night operation)
YELLOW	Control wire for switching on the side camera. The connection is to be made at the INDICATOR
ORANGE	Control wire for switching on the reversing camera. The connection is to be made at the reversing light

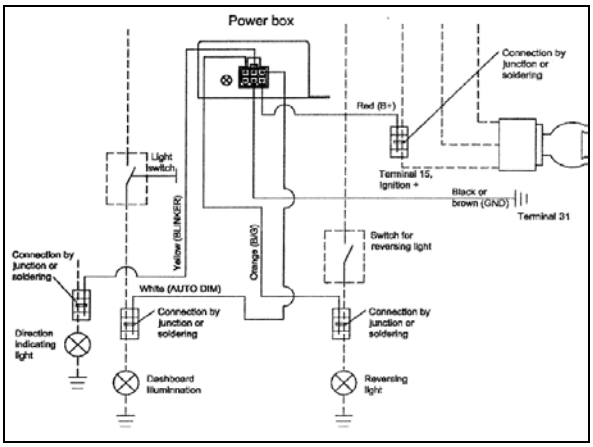

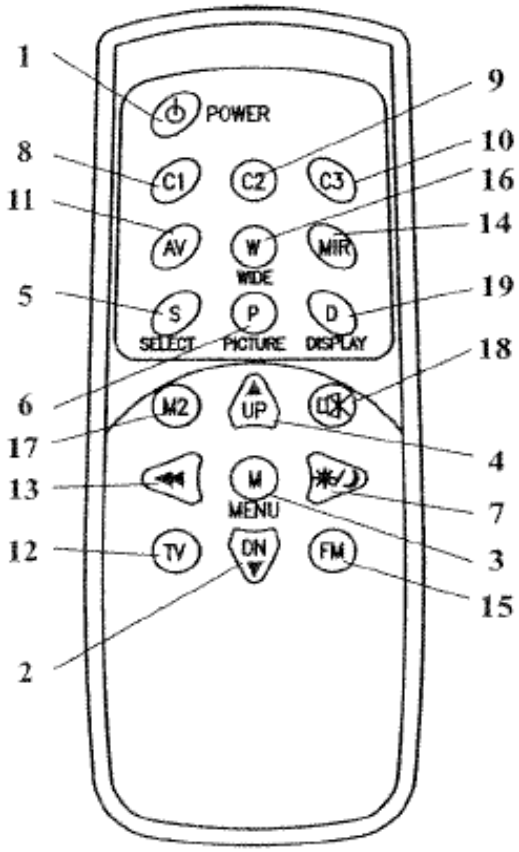

No	Key	Description
1	STANDBY	On/Off switch
2	DOWN▼	This key has 3 functions. – Decrease of the volume during normal operation. – Modification of the setting within a function e. g. brightness (after calling up the menu). – By pressing this key when putting in the reverse gear the distance markings move downwards.
3	MENU	Calling up the menu on the screen. Three menus can be called up : a: PICTURE = Functions for the image setting b: USER = Selection of the system function c: TIME = Setting time and date d: INSTALL = Setting the camera function (e.g. mirror function)
–4	UP ▲	This key has 3 functions. – Increase the volume during normal operation – Modification of the settings within a function e. g. contrast (after calling up the menu) – By pressing this key when putting in the reverse gear the distance markings move upwards.
5	SELECT	This key has 2 functions Selection of the video sources (CA1→CA2→AV) Selection of the functions e.g. picture setting (after calling up the menu)
6	PICTURER	Calls up the functions CONTRAST, BRIGHTNESS etc. directly for the picture setting. Carry out the setting with the key UP or DOWN.
7	DIMMER	Regulates the brightness to night operation temporarily
8	C1	Selection of the camera 1
9	C2	Selection of the camera 2
10	C3	Selection of the camera 3 (camera input 3 is not available))
11	AV	Selection of the video input (RCA)
12	TV	Not available
13	SEARCH	Not available
14	MIRROR	Reversing left and right of picture temporarily
15	FM	Not available
16	WIDE	Setting of the screen format NOR/NOR: 4:3, picture format 4:3 WIDE/WEIT, picture format 16:9 FULL/BREIT, picture format 16:9 middle enlarged
17	MONITOR2	Not available
18	MUTE	Switches off the tone temporarily
19	DISPLAY	This key has 2 functions – Deleting or calling OSD letters of Tile & Time temporarily – Leaving the menu

4. HUBODOMETER

4.1 DESCRIPTION

An optional wheel hubodometer (Figure 18) may have been installed on the R.H. side of the drive axle. It indicates the total distance in miles or kilometers covered by the coach since it has left the factory, including road testing.

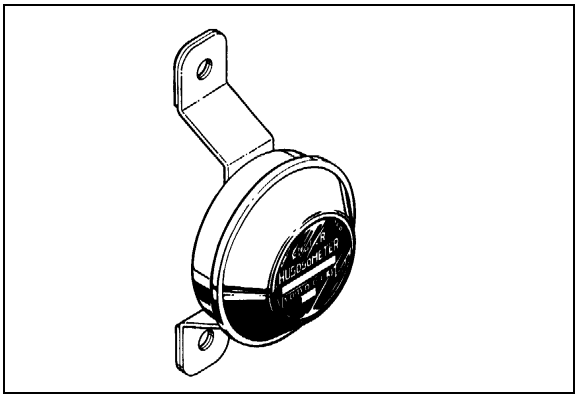

FIGURE 18: HUBODOMETER 23024

4.2 OPERATION

The hubodometer is calibrated for a specific wheel size (diameter). Wheel rotation causes a mechanism inside the hubodometer to record distance after a predetermined number of rotations. The unit should be serviced at a competent speedometer repair facility.

NOTE
Do not use paint, solvent or thinner on hubodometer face or on plastic hubcaps. Do not weld on hubodometer.

4.3 REMOVAL

To remove the unit, remove the two lock nuts and washers securing it to the wheel hub, and pull the unit off the studs.

4.4 INSTALLATION

Place the hubodometer unit over the wheel hub studs. Replace the lock washers and nuts. Torque stud nuts.

TORQUE: 110-165 lb-ft (149-224 Nm)

5. ELECTRONIC DESTINATION SIGN INSTALLED ON X3-45 COACHES (OPTIONAL)

The optional destination sign is located at upper front of the vehicle. To change the destination, depress the selecting switches until the desired destination appears in the LCD display.

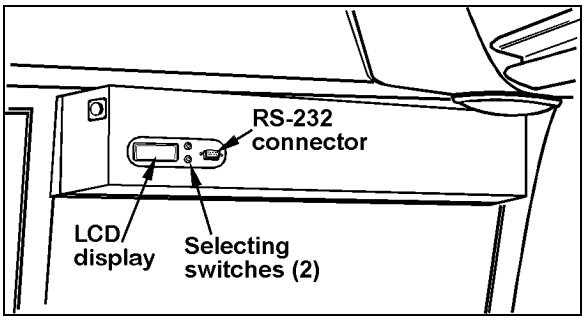

FIGURE 19: DESTINATION SIGN – ELECTRONIC 23123

NOTE
The destination sign must be programmed with a computer connected to the RS-232 connector prior to first use. Follow the instructions on the computer disk to install and run the software.

NOTE
The destination sign is equipped with lights (bulb light or fluorescent) which illuminates automatically when the headlight or fog light switch is activated.

6. SUNSHADES

6.1 WINDSHIELD SUNSHADES

Two electrically-operated sunshades are installed in the driver's area at the top of the windshields. Two control buttons located on the steering wheel and two on the dashboard operate each sunshade individually. Refer to Operator's Manual: "Controls and Instruments" chapter for more information.

Caution: *The electric sunshades should only be operated electrically. Pulling down manually may damage the mechanism.*

6.1.1 End of Stroke Adjustment

The sunshades end positions are pre-adjusted at factory. If an adjustment is required, proceed as follows:

1. Place the ignition key to the ON position.
2. Insert a small nail or similar thin object into sunshade adjustment button access hole and press the appropriate sunshade DOWN button **simultaneously** and hold them until a beeping tone sounds. Release both buttons.

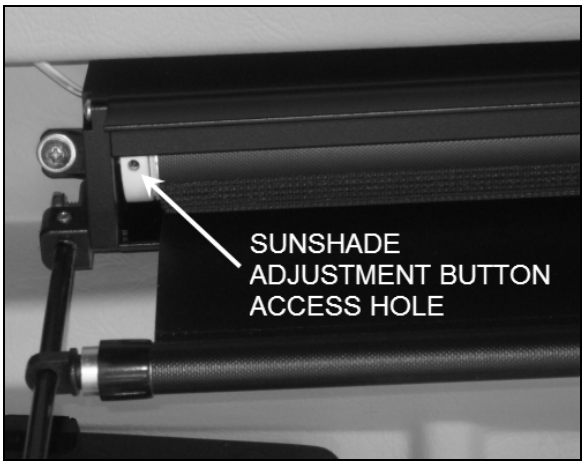

FIGURE 20: DRIVER'S SUNSHADE

FIGURE 21: L.H. SUNSHADE CONTROL BUTTON

3. Move the sunshade to the desired lower end of stroke position using the control button (never move sunshade by hand) and then release button.
4. Proceed to fine adjustment of lower end position by pressing the DOWN button repeatedly.
5. Press the sunshade UP (opposite direction) button to save #1 end position. The confirmation tone will sound.
6. Move the sunshade to the desired upper end of stroke position using control button (never move sunshade by hand) and then release button.
7. Proceed to fine adjustment of upper end position by pressing the UP button repeatedly.
8. Press the sunshade DOWN (opposite direction) button to save #2 end position. The confirmation tone will sound. The adjustment mode is then deactivated.

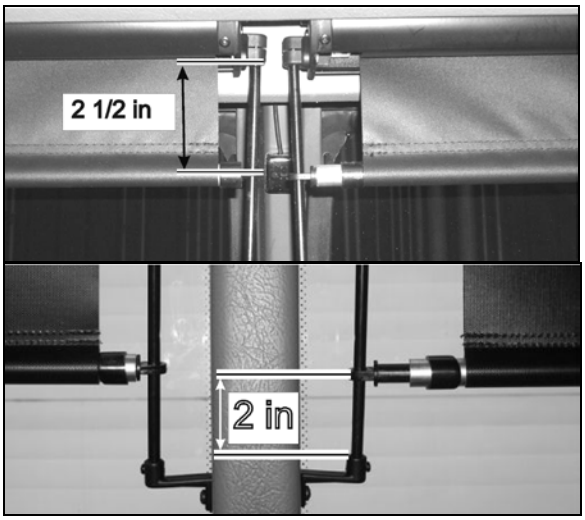

FIGURE 22: FACTORY ADJUSTMENT OF UPPER AND LOWER END POSITION

6.2 PASSENGER SUNSHADES

Manually operated passenger sunshades are factory installed on some vehicles. The sunshades are pulled down and can be locked in the window side moldings at half or full close position.

To release, simply disengage the sunshade from the moldings and release. Spring tension will pull back the sunshade to the full open position.

Correct spring tension is set at the factory and should not need further adjustment.

However, if for any reason a sunshade has to be removed from the vehicle, preloading of the recoil mechanism will be required before re-installation to ensure that the sunshade returns to the full open position when released.

6.2.1 Preload Adjustment

Using the chart below, preload the sunshade mechanism before installing the sunshade in the window support.

Note: *When installed, lower the sunshade 6po (15cm) and release. The sunshade should retract freely to the full open position. Re-adjust preload as needed.*

Sunshade Type	Req. Preload
Std Sunshade	12 turns
Large WCL Sunshade	12 turns

7. LAVATORY INSTALLED ON X3-45 COACHES

7.1 DESCRIPTION

The lavatory is located in the rear curb side corner of the coach. It is equipped with a chemical flush toilet, bathroom tissue dispenser, mirror and waste container access.

A movement detector will automatically illuminate a fluorescent light inside the lavatory and two outside occupied signs. One sign is located on the outer wall of the lavatory and another sign is located over the windshield. A telltale light on the dashboard will also illuminate to inform the driver when the lavatory is occupied.

If emergency assistance is required, the lavatory occupant can actuate a buzzer that will sound in driver's area. The buzzer push-button is located just below the toilet flush button.

The lavatory has its own ventilation system that operates only when ignition switch is in the "ON" position.

NOTE
This fan runs constantly when the ignition switch located on the dashboard is in the "ON" position.

Also, a drain hole located on lavatory floor drain water splashed on the floor to the engine compartment R.H. side.

7.2 MAINTENANCE

The servicing procedure for the lavatory is described in the *"Operator's Manual"* included in the technical publications box delivered with the vehicle.

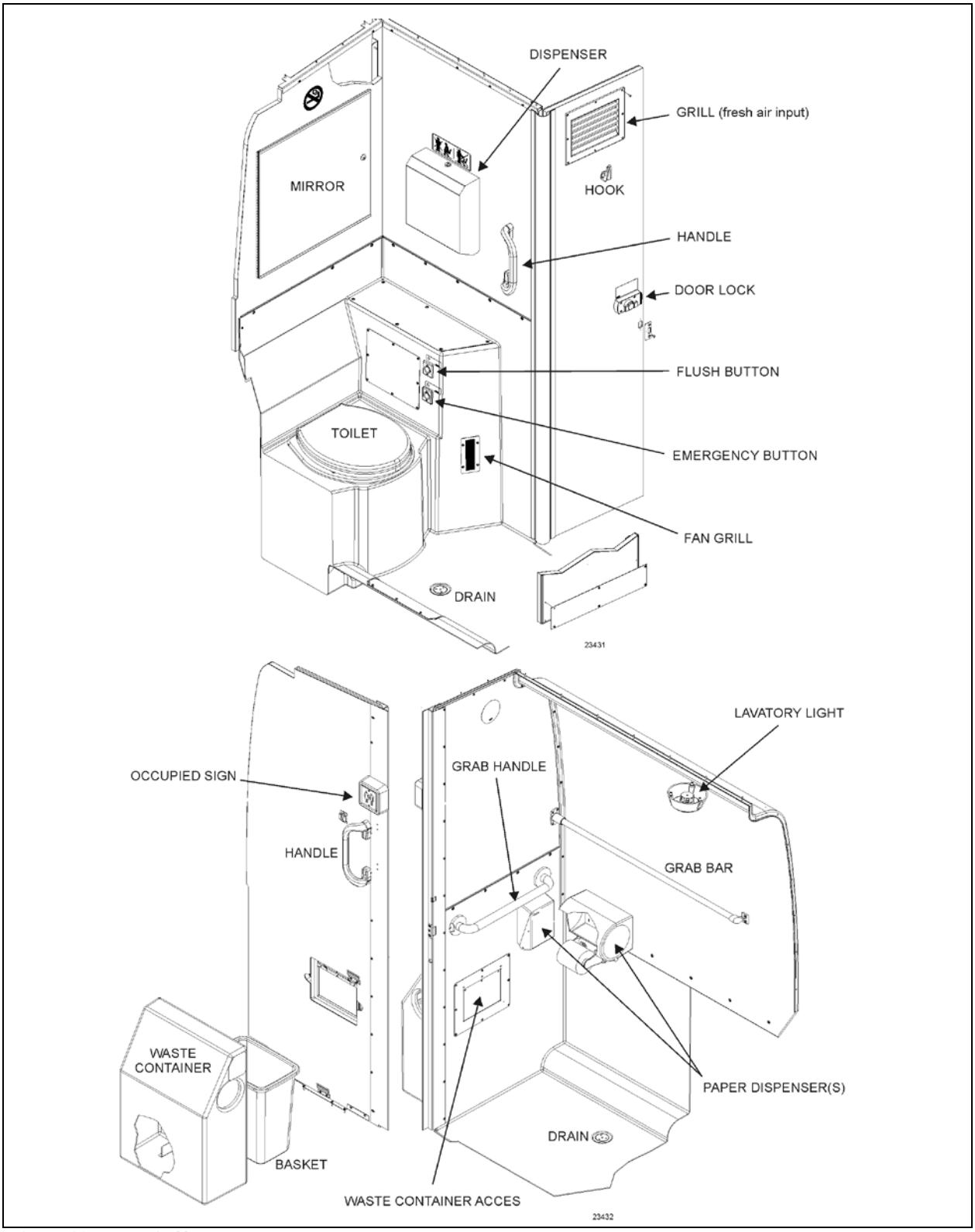

FIGURE 23: LAVATORY

7.3 VENTILATION FAN

7.3.1 Description

The lavatory ventilation fan (Figure 24), mounted in engine compartment, serves two purposes. It exhausts objectionable odors and provides a constant air circulation in the lavatory compartment by heating or cooling the lavatory with the vehicle ambient air. Air flows in the lavatory compartment through a vent grill located on the lavatory door and exhausts through a grill located next to the toilet.

NOTE
This fan runs constantly when the ignition switch located on the dashboard is in the "ON" position.

7.3.2 Maintenance

The frequency of preventive maintenance should be determined according to vehicle mileage and operating conditions. However, it is recommended to check this item every 50,000 miles (80 000 km) or once a year, whichever comes first.

Remove fan and motor assembly. Check for fan housing wheel and motor free operation. When defective motor occurs, new motor must be installed.

7.3.3 Removal and Installation

1. Open SRC access door *(refer to Section 2 of the Operator's Manual under Exhaust Aftertreatment System Access Door).*
2. Locate fan assembly and disconnect the fan wiring connector.
3. Remove the fan shroud mounting screws and remove the ventilation fan assembly from its location.
4. The unit can now be disassembled and the motor and components replaced as necessary.
5. Reverse previous steps to reinstall fan assembly on vehicle.

NOTE
Make sure fan shroud seal is in good condition prior to installation, replace as necessary

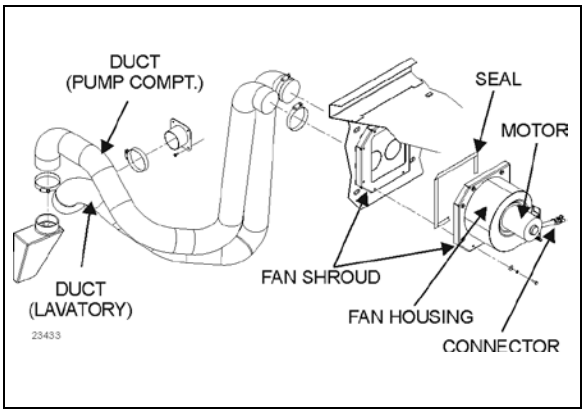

FIGURE 24: VENTILATION FAN INSTALLATION

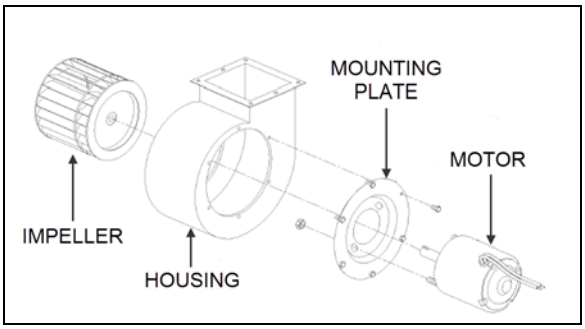

FIGURE 25: FAN ASSEMBLY COMPONENTS

7.4 DOOR LOCK

Lavatory door lock has inside and outside handles, as well as an inside latch to lock door from inside the compartment. If the lock fails to release, the door can be opened from the outside using a special key which is supplied to the driver. Lock assembly can be removed from the door; a thin coat of lubricant on all moving parts will ensure trouble-free operation.

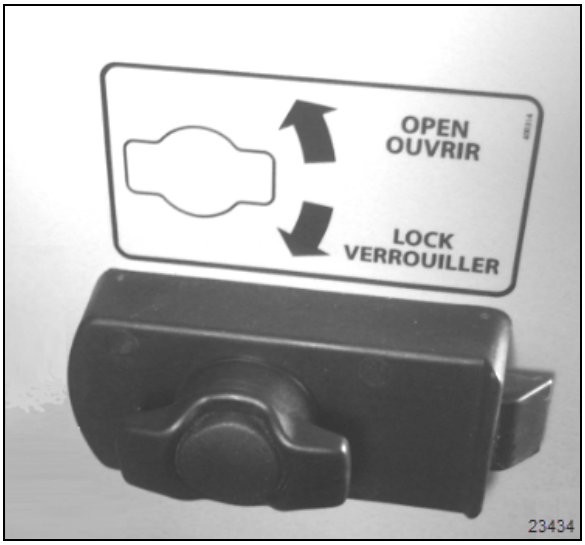

FIGURE 26: DOOR LOCK – FROM INSIDE LAVATORY

7.5 LAVATORY LIGHT & NIGHT-LIGHT

A lavatory LED light with built-in motion detector is installed on lavatory ceiling and will illuminate as soon as door (or occupant) movement is detected. At night, when the ignition switch is set to the ON position, the light will provide dimed illumination inside the lavatory. The light & movement detector can be serviced as a complete assembly by removing the mounting screws holding the unit to the celling.

7.6 EMERGENCY BUTTON

The lavatory emergency buzzer is mounted on the inner curb side wall of lavatory and sounds when the emergency call push-button switch in the lavatory compartment is activated. For specific wiring information, refer to wiring diagrams. To remove the emergency call push-button switch, proceed as follows:

1. Remove both Phillips-head screws retaining pushbutton switch plate to wall.
2. Remove stainless steel plate located on L.H. side of pushbutton switch.
3. Remove switch through this opening, taking care to disconnect electric wires.

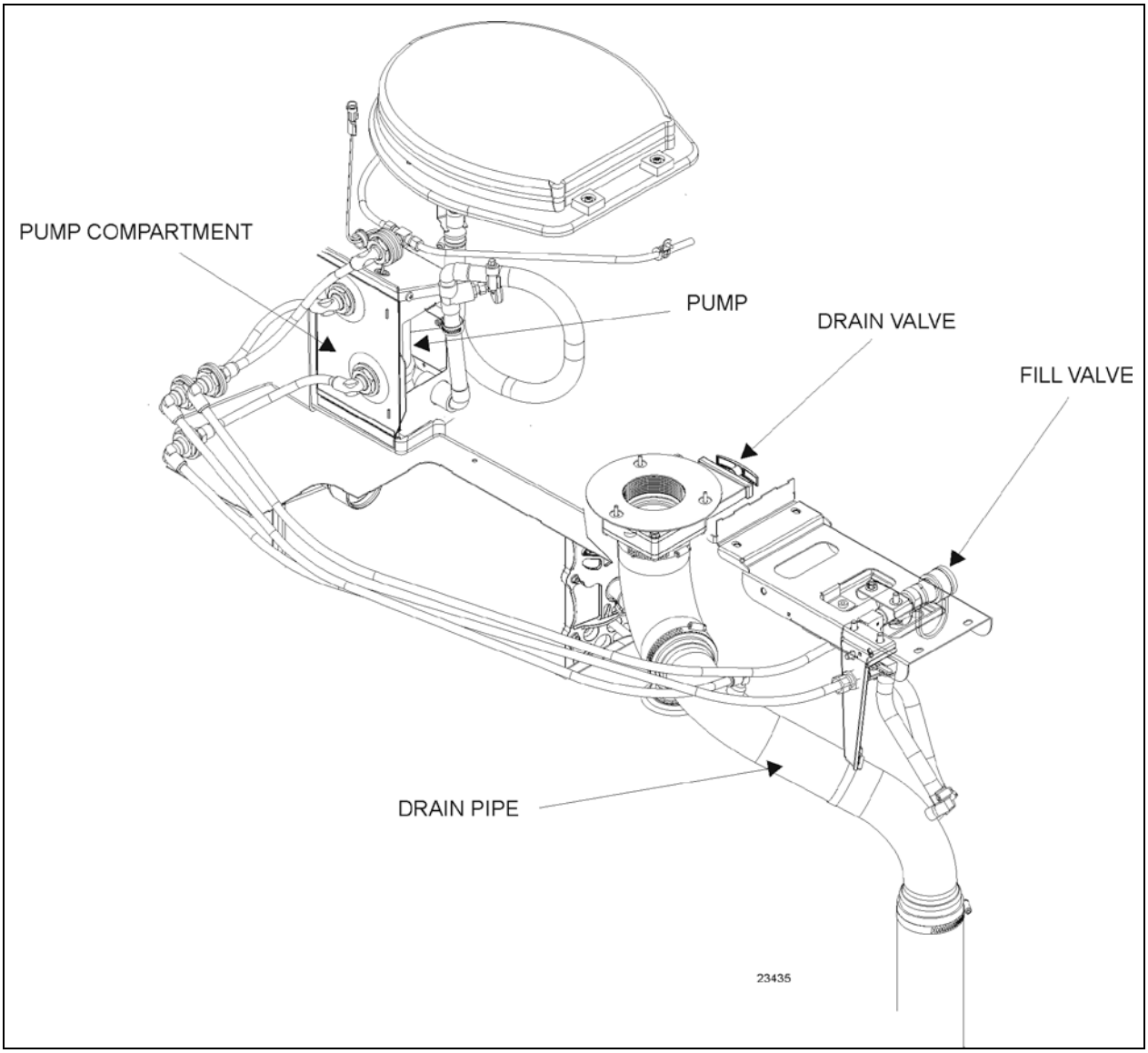

FIGURE 27: LAVATORY PLUMBING COMPONENTS

7.7 FLUSH PUSH-BUTTON

The flush push-button is mounted on the inner curb side wall of lavatory just over the emergency button. Press on push-button to actuate the pump located in the sump tank.

7.7.1 Flush push button removal and installation

1. Remove both Phillips-head screws retaining pushbutton switch plate to wall.
2. Remove stainless steel plate located on L.H. side of pushbutton switch.
3. Remove pneumatic timer through this opening, taking care to disconnect electric wires.
4. Reverse the above procedure to reinstall timer.

7.8 FLUSH PUMP

The submersible-type flush pump is mounted inside an enclosure in the sump tank. The enclosure is provided with a screened side which, serves as a strainer to prevent solid matters from entering the pump.

The pump requires no periodic maintenance other than cleaning of the strainer side using a water jet introduced through the circular cap opening, once the sump tank is completely drained. The pump can run dry periodically without damage. However, for maximum seal life, the run dry periods should be kept to a minimum.

CAUTION

If vehicle is stored for an extended period of time, make sure to clean the strainer as solid matter will tend to pack, and will necessitate replacement of strainer.

7.8.1 Flush Pump Removal

1. Drain tank.
2. Remove the toilet seat and cover.
3. Remove the toilet bowl flange.
4. Lift the toilet bowl, disconnect the water hose and remove the bowl & flap.
5. Remove the pump enclosure retaining screw and remove (lift-up) the complete assembly from the tank.
6. Remove the enclosure cover to access and remove the pump.

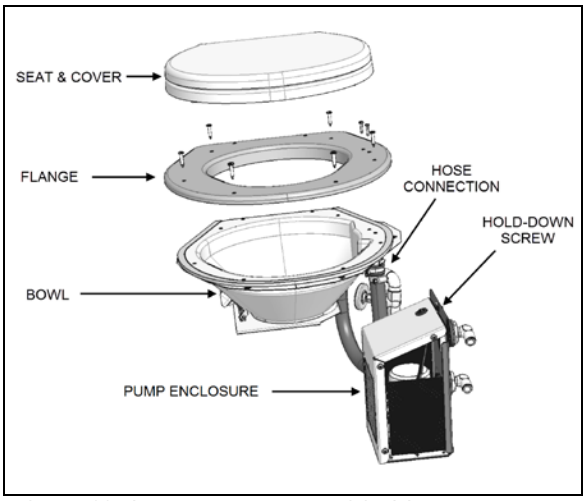

FIGURE 28: SUMP TANK PUMP ACCESS

7.9 SUMP TANK

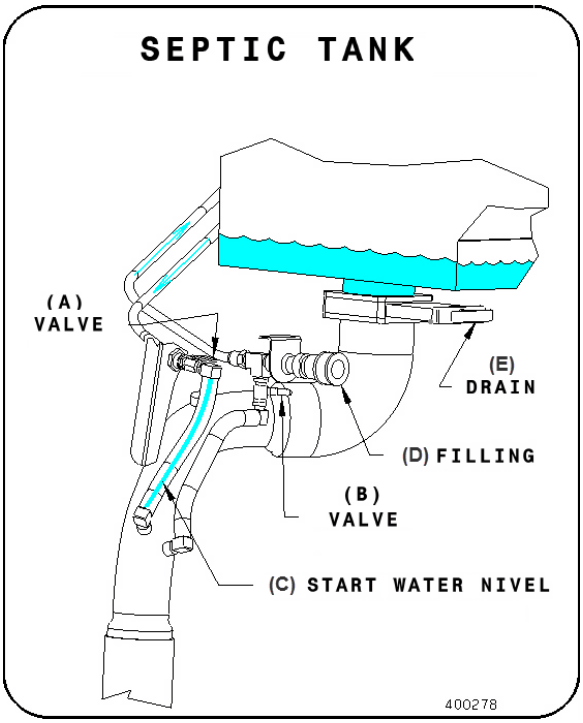

FIGURE 29: SUMP TANK SERVICE VALVES

7.9.1 Sump Tank Draining

When recirculating water in the toilet is soiled, drain sump tank. Pull the drain slide valve lever (E) and allow contents to drain. Remove the access cap and flush tank with clean water. To close, push the slide valve (E) back into closed position.

7.9.2 Sump Tank Filling

Open the sump tank overflow valve (A) and connect a water supply hose to the toilet sump tank fill connection (D). The sump tank is full when water starts flowing through the clear overflow (start water nivel) tube (C). Close sump tank overflow valve (A) when the tank is full and drain water fill tube using drain valve (B) to avoid ice damage during cold weather operation.

CAUTION

In cold weather, add 2 gallons (9 liters) of antifreeze (e.g.: ethylene glycol) in the toilet before filling sump tank.

CAUTION

Lavatory tank should be serviced only at suitably equipped stations.

NOTE

It is unlawful to dump sump tank contents in any location other than those designated as such.

When a full draining is required, clean sump tank by repeating the draining and filling operations while leaving the drain cock opened. Close cocks and pour a pack of commercial toilet deodorant (Prevost part #900329) in toilet before adding the antifreeze and starting final filling of sump tank.

WARNING

The toilet deodorant contains products that can be very irritating to skin. Use rubber gloves when handling and then clean toilet seat.

WARNING

Antifreeze must comply with the effective environmental act.

CAUTION

When cold weather is expected and there is no antifreeze in the tank, sump tank must be drained.

NOTE

If there is no antifreeze solution in the tank, there is less risk of freezing if engine is operating due to the heat it produces.

NOTE

New coaches are delivered with the sump and fresh water tanks empty. Fill with water before putting the coach in service.

8. HORN INSTALLATION

The electric and air horns are located in a plastic box under the front step well and are accessible from the front body understructure. Refer to Operator's or Owner's Manual for operation.

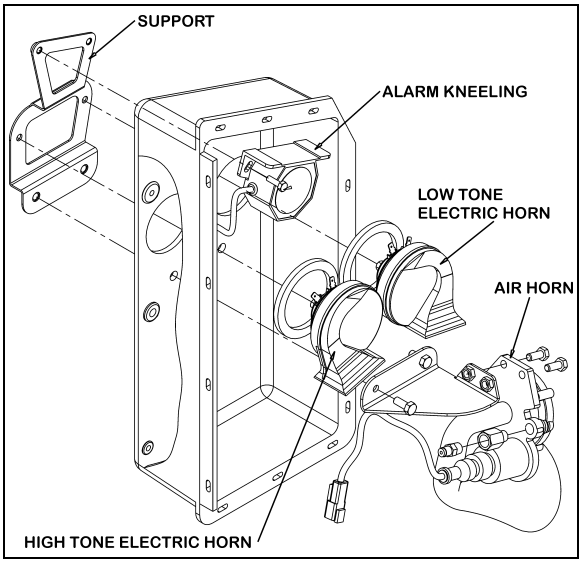

FIGURE 30: ELECTRIC & AIR HORN INSTALLATION 23420

8.1 ELECTRIC OR AIR HORN MAINTENANCE

When needed, the electric or air horn can be serviced or replaced using the following procedure:

1. Raise vehicle by the jacking points;
2. Unplug the cable connector;
3. Disconnect the air tube if applicable;
4. Loosen the retaining bolts;

5. Service or replace the defective horn;
6. Reinstall by reversing procedure.

9. HEADLIGHTS CLEANING SYSTEM

9.1 GENERAL DESCRIPTION

NOTE
When inspecting the headlights cleaning system, check the washer fluid hoses, fittings and connectors to be sure they are properly connected and seal with no restriction to the flow of washer fluid. Check that the washer nozzles are properly aimed.

The headlights cleaning system is independent from the windshield washer system and has its own washer fluid reservoir located in the front electrical and service compartment. However, this system shares the same telltale light than the windshield washer low level sensor (refer to Operator's manual for operation). Each pressing of this switch produces 2 successive 0.7 seconds jets.

CAUTION
Do not operate the headlights washer while the washer fluid reservoir is empty. This may damage the washer fluid pump.

9.2 WASHER FLUID REFILLING

Open the filler neck cap and had regular windshield washer fluid as required. The tank has a capacity of 10 liters (2.6 US gallons). You may use water or windshield washer fluid as well but, during cold weather days, use windshield washer fluid suitable for freezing temperature only.

9.3 WASHER NOZZLES ADJUSTMENT

To avoid waste of washer fluid, assure the fluid jets are properly aimed. Adjust nozzles so they aim as described in figure 32. Align the jet adjustment tool #800377 with the reference line shown on the front view detail. As seen on the side view, position the end of the adjustment tool to a distance of ½" (high beam) and 1" (low beam) from the top of the headlight for proper aiming.

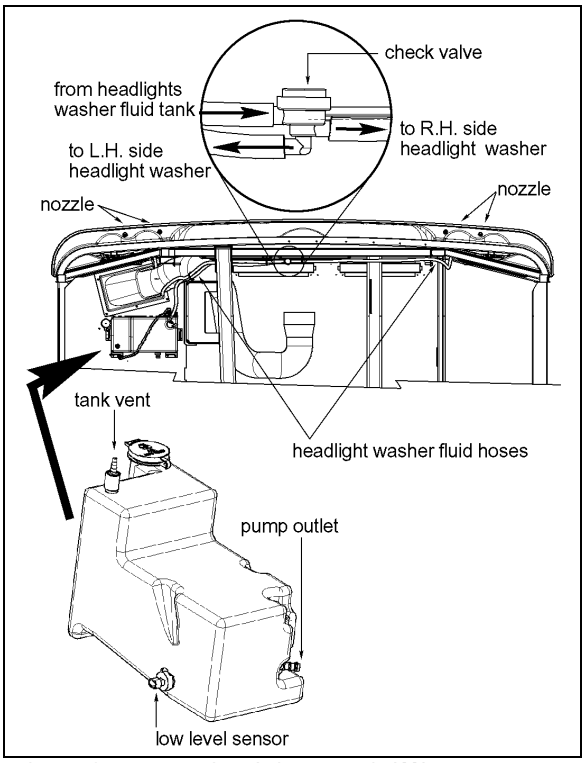

FIGURE 31: HEADLIGHTS CLEANING SYSTEM 23380

CAUTION
Because they are made of plastic, firmly tighten nozzle and bulkhead fittings by hand only.

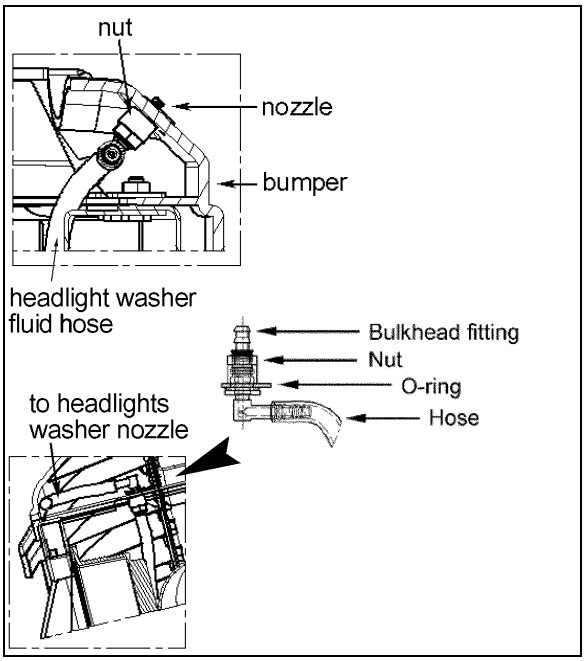

FIGURE 32: TUBING AND FITTINGS 23381

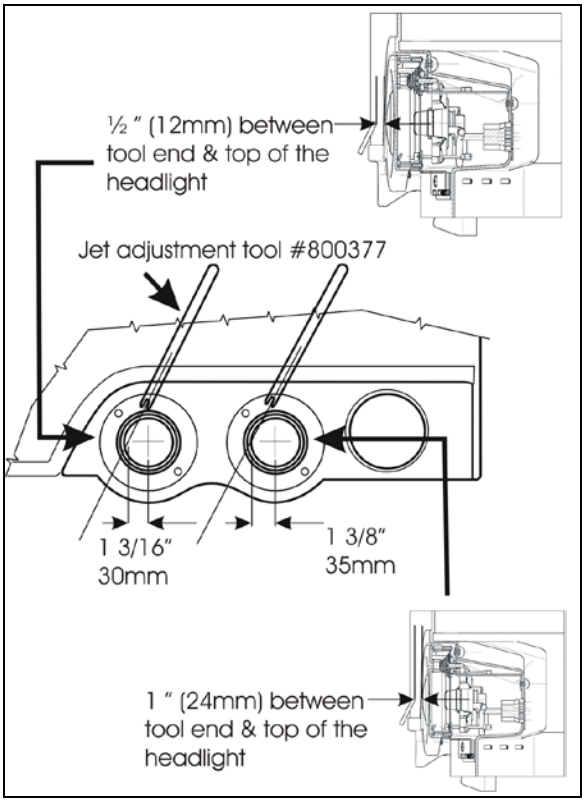

FIGURE 33: WASHER NOZZLES ADJUSTMENT 23382

10. WINDSHIELD WIPERS AND WASHERS

10.1 GENERAL DESCRIPTION

NOTE
When installing a wiper motor, arm or blade, follow recommended procedures to prevent misalignment, binding or malfunction. Check the windshield washer liquid hoses, fittings and connectors to be sure they are properly connected and seal with no restriction to the flow of washer liquid. Check that wiper arms have the proper sweep position and the washer nozzles are aimed so that spray is within the proper wiper pattern.

The windshield wipers are controlled by one electric wiper motor that is accessible for maintenance after removing the appropriate access panel beside the footwell (refer to figure 35).

Turn the multifunction lever forward to activate windshield wipers (item 2,Figure 34). The first position operates the wipers at low speed and the second position operates the wipers at high speed. Turning the lever backwards will operate the wipers in the intermittent mode.

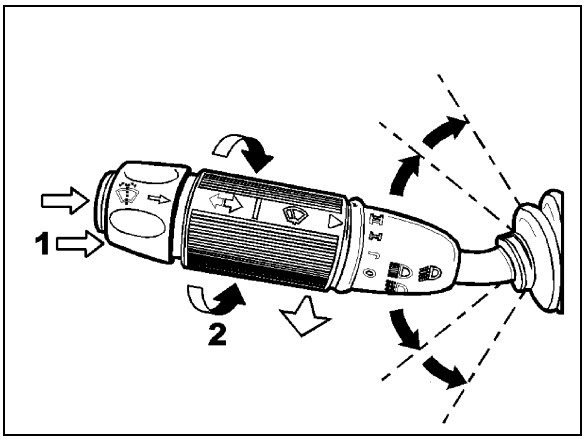

FIGURE 34: MULTIFUNCTION LEVER 23133

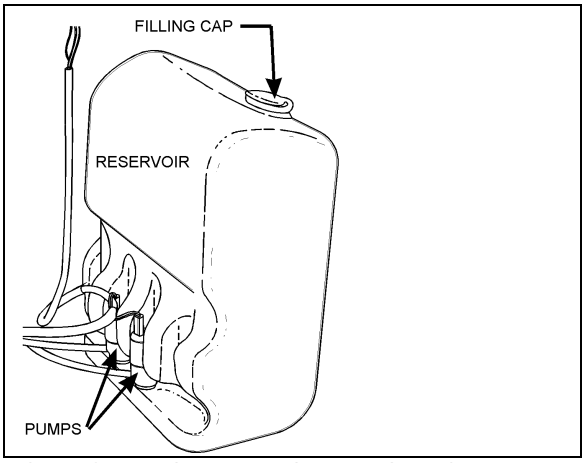

FIGURE 35: WINSHIELD WASHER RESERVOIR 23220

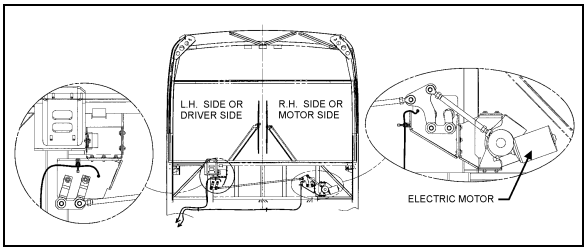

FIGURE 36: WINDSHIELD WIPER INSTALLATION 23287

The windshield washer pumps are electrically operated and are controlled by a washer control ring on the multifunction lever (item 1, Figure 34).

The windshield washer reservoir is located in the front service compartment (Figure 35). This unit pumps the washer liquid to the spray nozzles where it is dispersed across the windshield.

10.2 WIPER ARM

Check operation of the wipers for proper blade sweep and angle.

10.2.1 Wiper Arms Positioning

1. Reinstall the wiper arms and position as shown in figure 40. Before positioning the wipers at their final position, tighten the nuts at first.

TORQUE 9 lb-ft (12 Nm)

2. To find the final position of the wiper arms, lift then release the wiper arm so if falls back on the windshield.

CAUTION

Do not attempt to manually move the wiper arms to make wiper blade sweep adjustments as damage to the wiper linkage or motor may occur. If it is necessary to adjust the sweep of blades, remove the arms and make adjustment by positioning the arms using serration on the wiper arm pivot shafts.

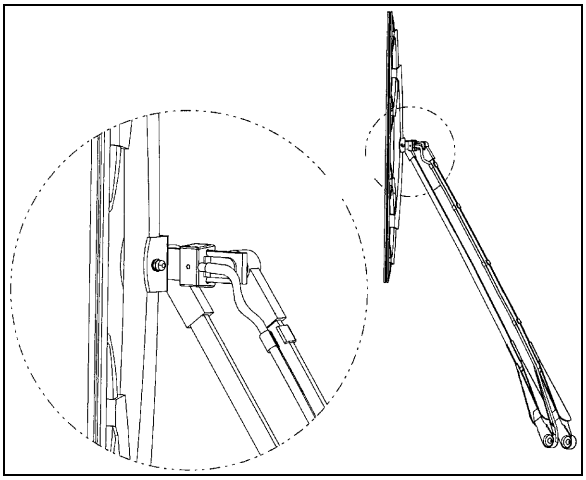

FIGURE 37: WINDSHIELD WIPER (MOTOR SIDE)

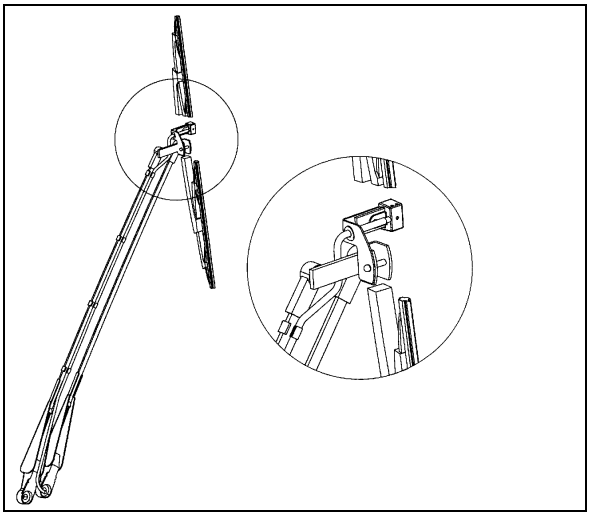

FIGURE 38: WINDSHIELD WIPER (DRIVER SIDE) 23328

3. When the final position is found, tighten wiper arm nuts. Wait 30 minutes and tighten again.

TORQUE 22 lb-ft (30 Nm)

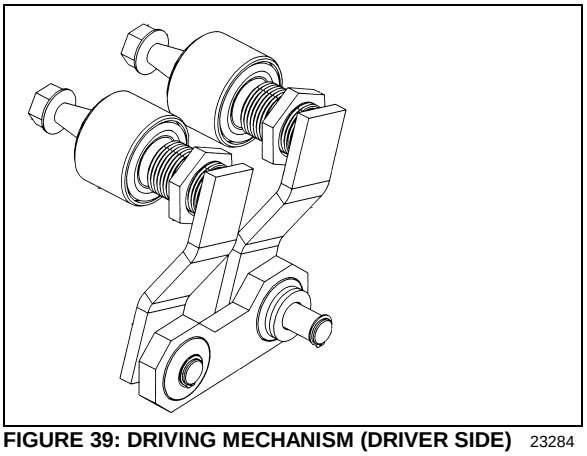

FIGURE 39: DRIVING MECHANISM (DRIVER SIDE) 23284

4. Lower the protective cover.
5. Connect the windshield washer tubing at the base of the wiper arm.
6. Check the adjustment on a wet windshield.

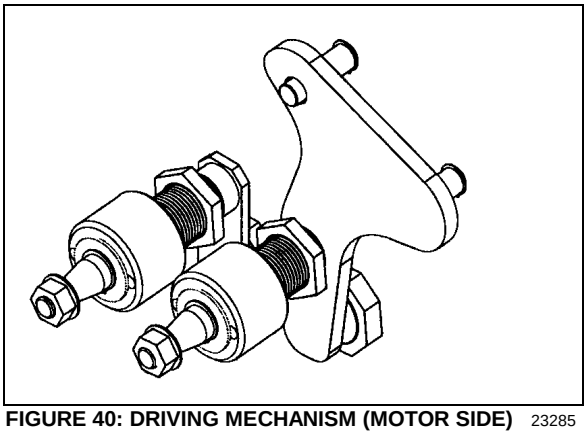

FIGURE 40: DRIVING MECHANISM (MOTOR SIDE) 23285

10.3 WINDSHIELD WIPER MOTOR

10.3.1 Windshield Wiper Motor Replacement

The windshield wiper motor is located at lower front of the vehicle, behind the defroster panel. Refer to figure 35 for motor location.

WARNING

Park vehicle safely, apply parking brake, stop engine and set battery master switch to the ''OFF'' position prior to working on the vehicle.

1. Remove the Phillips-head screws retaining the defroster panels, and remove panels.
2. Disconnect wiring connector from the windshield wiper motor.
3. Loosen clamping screw retaining the lever at the end of the motor driving shaft.
4. Remove the three bolts holding the motor to the steel plate.
5. Remove the windshield wiper motor (Prevost #800328), reverse removal procedure to reinstall.

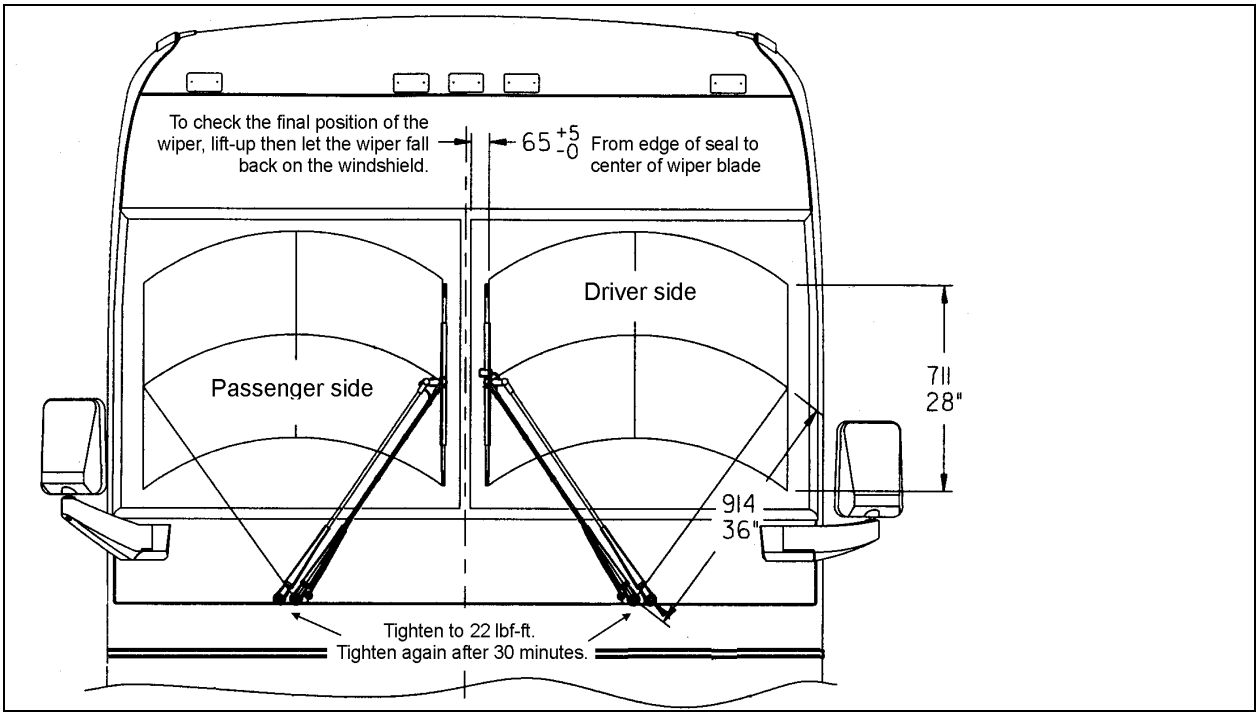

FIGURE 41: WIPER ARMS POSITIONING 23253

10.4 TROUBLESHOOTING

SYMPTOM	PROBABLE CAUSE	REMEDY
FAIL TO SPRAY WASHER FLUID	A. Reservoir empty. B. If below 32°F (0°C), improper washer fluid frozen. C. Contamination in tubing or nozzles. D. Tubing damage. E. Tubing bent (kinked) or off one or more connections.	A. Add proper fluid. B. Store coach or parts in heated area, then purge system with low-temperature solution. C. Remove with compressed air, if severely clogged, replace items. D. Replace section. E. Realign tubing and/or refit. Trim end to ensure proper fit or replace.
INADEQUATE SPRAYING	A. Tubing failure.	A. Replace tubing.
SLOW OPERATION	A. Improper solution. B. Jet stream improperly directed. C. Check if valve is stuck in the open position.	A. Replace with proper type solution. B. Reposition nozzles. C. Remove, clean or replace.

11. TIRE PRESSURE MONITORING SYSTEM (TPMS)

The optional active tire pressure and temperature monitoring system is a sensing device designed to identify and display tire operating data and activate an alert or warning when pressure or temperature irregularities are detected.

For more information on the operation and troubleshooting of the system, refer to Prevost X3-45 Coaches Operator's Manual, chapters "Controls and Instruments" and "Safety Features and Equipment" sections.

12. AUTOMATIC FIRE SUPPRESSION SYSTEM (AFSS) (OPTIONAL)

This optional system is used to shut down the engine and to extinguish a fire in the engine compartment or in the vicinity of the preheating system if so equipped.

The system operation is fully automatic and does not require assistance from the operator, however if required, the system can be manually activated by the operator at any time.

Refer to Prevost Operator's Manual for system operation and operational sequence (fire).

If more information is needed on the system, please refer to Kidde Dual Spectrum "Operation & Maintenance Manual annexed at the end of this section.

12.1 STARTING THE VEHICLE AFTER A FIRE ALARM

The vehicle may be started after a fire alarm without resetting the system. Refer to ignition switch sequence below. This will not reset the system, rather it will instruct the vehicle's multiplex system to ignore vehicle interface outputs from the Protection Panel. This feature is intended to be used only in emergency situations that require the vehicle to be restarted and moved a short distance prior to system reset. It should not be performed if the cause of the fire has not been clearly identified and corrected.

To start the vehicle, perform this ignition switch (key) sequence.

- From the **ON** position,
- Turn to **OFF**, return to **ON** *and* **START** vehicle within 2 seconds.

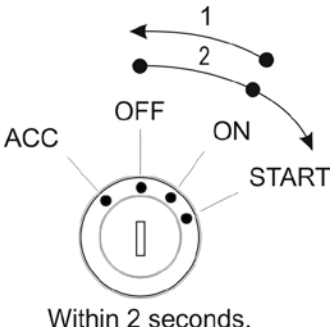

12.2 PERIODIC MAINTENANCE

PRE-TRIP

- o Verify that the Protection Panel ”SYSTEM OK” lamp is on solid green.

EVERY 3000 MILES OR MONTHLY (whichever comes first)

General

- o Verify that neither the protected equipment nor the hazard has changed.
- o Verify that no obvious physical damage or condition exists that might prevent system operation.

Protection Panel

- o Verify that all warning lamps and the audible alarm are operational by pressing the “TEST/RESET” button.

Manual Activation Switch

- o Verify that the tamper seal is intact and access to the switch is unobstructed.

Fire Detectors

- o Optical
  - Verify that the status lamp on the detector face is on solid green.
  - Verify that nothing is blocking the detector’s field of view.
  - Verify that the windows on the face of the detector are free of excess contamination (dirt, oil, grease, etc.) – if necessary, clean using a water soaked non-abrasive towel.
- o Linear Thermal
  - Verify that there is no obvious physical damage and that the unit is free of excess contamination (dirt, oil, grease, etc) – if necessary, clean using a water soaked non-abrasive towel.
  - Verify that mounting is secure and taught.

Electrical Harness

- o Verify that electrical connectors and electrical wiring have no visible damage and all connectors are securely seated.

Extinguisher & Distribution System

- o Verify that that the extinguisher pressure gauge pointer is in the green arc at room temperature.
- o Verify that distribution piping and nozzles are intact and unobstructed and that nozzle blow-off caps are in place.

EVERY 18000 MILES OR SEMI-ANNUALLY (whichever comes first)

- o Perform a comprehensive fire system test using a Kidde Dual Spectrum System Test Set (Optical Test Kit P/N 420871-2).
- o Service the extinguisher in accordance with KDS Document 160296, “KDS Pre-Engineered Fire Suppression System: Installation, Operation and Maintenance Manual”.

MAINTENANCE

EVERY SIX YEARS

Have the fire extinguisher rebuilt by a qualified fire protection equipment company familiar with Kidde Dual Spectrum equipment and in accordance with KDS Document 160296, “KDS Pre-Engineered Fire Suppression System: Installation, Operation and Maintenance Manual”. Rebuilt shall include actuator, O-ring seals and dry chemical replacement.

MAINTENANCE

EVERY TWELVE YEARS

Have the Extinguisher cylinder hydrostatically tested by a qualified fire protection equipment company familiar with Kidde Dual Spectrum equipment and in accordance with KDS Document 160296, “KDS Pre-Engineered Fire Suppression System: Installation, Operation and Maintenance Manual”.

CONTENTS

1 LUBRICATION 2

2 LUBRICATION AND SERVICING 2

2.1 FLEXIBLE HOSE MAINTENANCE 2

2.1.1 Hose Inspection 2

2.1.2 Leaks 2

2.1.3 Service life 2

3 LUBRICATION AND SERVICING SCHEDULE - COACHES 8

3.1 COACHES LUBRICATION AND SERVICING SCHEDULE CHANGE LOG 13

4 SPECIALTY TOOLS REQUIRED FOR REGULAR MAINTENANCE OF THE VEHICLES 14

5 LUBRICATION AND SERVICING SCHEDULE - MOTORHOMES 16

5.1 MOTORHOMES LUBRICATION AND SERVICING SCHEDULE CHANGE LOG 18

6 FLUIDS AND LUBRICANTS SPECIFICATIONS 19

6.1 FLUIDS AND LUBRICANTS SPECIFICATIONS CHANGE LOG 21

1 LUBRICATION

The efficiency and life expectancy of mechanical equipment is largely dependent on proper lubrication and servicing. All mechanical components rely on a lubricating film between moving parts to reduce friction, prevent wear and oxidation. Proper lubrication also helps cool the parts and keep dirt particles away from mating surfaces. Efficient lubrication depends upon using the right type of lubricant, at specified intervals and by filling to correct capacities. Past experience shows that many service problems can be traced to an improper lubricant or to incorrect lubrication procedures.

A comprehensive maintenance and lubrication program is important to ensure the long service life this vehicle was designed for and to avoid costly repairs and associated downtime caused by premature part failure.

A lubrication schedule is included in this section to give the location of key service points on the vehicle as well as the lubricant specifications for each component to be serviced. Specific instructions on how to check and service different components are covered in their respective sections in this maintenance manual.

The recommended lubrication intervals are based on normal operating conditions and mileage accumulation.

Shorten the intervals if your vehicle operates in more severe conditions. Severe conditions include heavy towing, high vehicle weight or operation in mountainous areas. Some parts and equipment referred to in this section may not be installed on your vehicle. Check your vehicle's "Coach Final Record" for equipment list.

Dispose of used lubricants and filters in an environmentally safe manner, according to federal and/or local recommendations.

2 LUBRICATION AND SERVICING

Following this service schedule is the most economical and easiest way to ensure your vehicle performs at its best, safest and longest. Also, unscheduled maintenance will be minimized since inspection should expose potential problems before they become major ones.

2.1 FLEXIBLE HOSE MAINTENANCE

The performance of engine and equipment are greatly related to the ability of flexible hoses to supply lubricating oil, air, coolant, and fuel oil. Maintenance of hoses is an important step to ensure efficient, economical, and safe operation of the engine and related equipment.

2.1.1 Hose Inspection

Check hoses daily as part of the pre-starting inspection. Examine hose for leaks, and check all fittings, clamps, and ties carefully. Ensure that hoses are not resting on or touching shafts, couplings, heated surfaces including exhaust manifolds, any sharp edges, or other obviously damaging areas. Since all machinery vibrate and move to a certain extent, clamps and ties can fatigue over time. To ensure proper support, inspect fasteners frequently and tighten or replace them as necessary.

WARNING

Personal injury and property damage may result from fire caused by leaking flammable fluids.

2.1.2 Leaks

Hoses have a limited service life. Thoroughly inspect hoses annually. Look for surface damage or indications of twisted, worn, crimped, cracked or leaking lines. Replace damaged hoses immediately.

Hoses should be replaced during major overhaul or after a maximum of seven years service. Be certain that replacement hoses match the original equipment manufacturer's specifications.

2.1.3 Service life

The limited service life of a hose is determined by the temperature and pressure of the gas or fluid within it, the time in service, its installation, the ambient temperatures, amount of flexing, and the vibration it is subjected to. With this in mind, it is recommended that all hoses be thoroughly inspected at least every 500 operating hours or after 15,000 miles (24 000 km). Look for surface damage or indications of damaged, twisted, worn, crimped, brittle, cracked, or leaking lines. Hoses having a worn outer surface or hoses with a damaged metal reinforcement should be considered unfit for further service.

It is also recommended that all hoses in this vehicle be replaced during major overhaul and/or after a maximum of five service years. Quality of replacement hose assemblies should always be equal to or superior to those supplied by the Original Equipment Manufacturer.

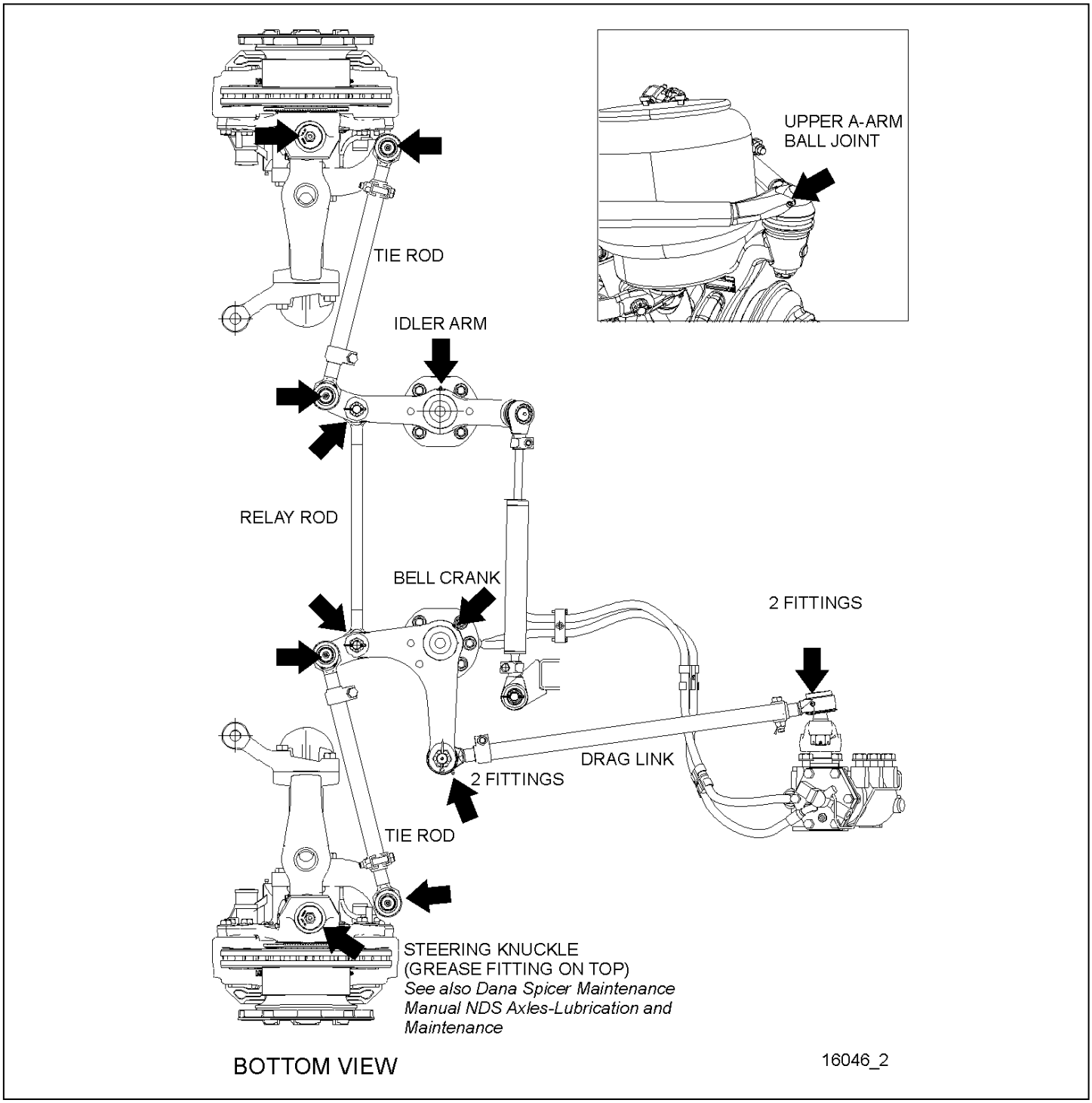

FIGURE 1: LUBRICATION FITTING LOCATIONS - INDEPENDENT FRONT SUSPENSION VEHICLES (TYPICAL)

FIGURE 2: LUBRICATION AND SERVICING POINTS (I-BEAM FRONT AXLE SHOWN) TYPICAL

1 Accessories air tank drain cock
2 Accessories air filter
3 Drag link
4 Height control valve (front)
5 Tie rod
6 Accessories air tank
7 Steering column U-joints
8 Steering knuckle pins
9 Steering damper cylinder
10 Emergency / parking brake overrule tank
11 Secondary air tank
12 Kneeling air tank
13 Air dryer
14 Height control valve (rear)
15 Wet air tank
16 Primary air tank
17 Drive Axle
18 Propeller shaft
19 Tag axle lever pivot
20 Transmission
21 Primary fuel filter
22 Secondary fuel filter
23 Power steering fluid tank
24 Engine oil filter
25 Cooling fan gearbox
26 Allison transmission oil dipstick
27 Engine coolant surge tank
28 Coolant filter & conditioner
29 Engine air filter restriction indicator
30 Engine air filter
31 Engine oil dipstick and filler tube
32 DEF tank
33 Diesel particulate filter
34 SCR catalytic converter
35 Diesel fuel tank
36 Davco Fuel Pro 382 fuel filter
37 Power steering pump
38 Air compressor
39 Starter
40 Fuel cooler

FIGURE 3: X3 SERIES COMPONENTS IDENTIFICATION (COMPONENTS REPRESENTATION MAY DIFFER SLIGHTLY FROM ACTUAL VEHICLE)

1 Accessories air tank drain cock
2 Accessories air filter
3 Steering drag link
4 Height control valve (front)
5 Steering tie rod
6 Accessories air tank
7 Steering column U-joints
8 Steering knuckle pins
9 Steering damper cylinder
10 Emergency / parking brake overrule tank
11 Secondary air tank
12 Kneeling air tank
13 Air dryer
14 Height control valve (rear)
15 Wet air tank
16 Primary air tank
17 Differential
18 Propeller shaft
19 Tag axle lever pivot
20 Transmission
21 Primary fuel filter
22 Secondary fuel filter
23 Power steering fluid tank
24 Engine oil filter
25 Alternators
26 Allison transmission oil dipstick
27 Engine coolant surge tank
28 Coolant filter & conditioner
29 Engine air filter restriction indicator
30 Engine air filter
31 Engine oil dipstick and filler tube
32 DEF tank
33 Diesel particulate filter
34 SCR catalytic converter
35 Diesel fuel tank
36 Davco Fuel Pro 382 fuel filter
37 Power steering pump
38 Air compressor
39 Starter
40 Cooling assembly (radiator & CAC)

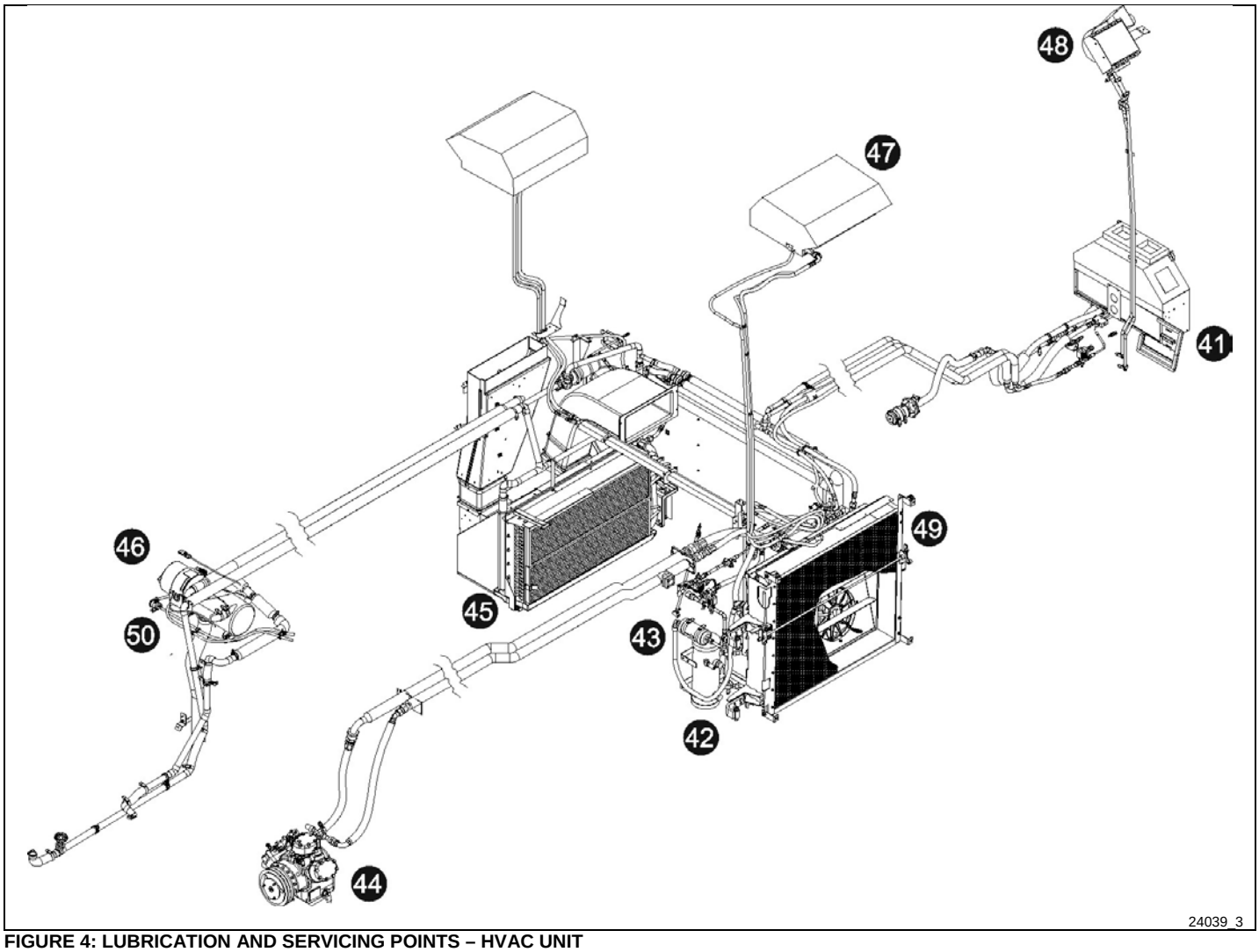

FIGURE 4: LUBRICATION AND SERVICING POINTS – HVAC UNIT

41	HVAC air filter – driver's unit	46	Coolant preheater
42	A/C receiver tank	47	A/C system – passenger's overhead console
43	Refrigerant moisture indicator	48	Upper windshield defrost unit
44	A/C compressor	49	Condenser coil
45	HVAC air filter – passenger's unit	50	Preheater fuel filter

3 LUBRICATION AND SERVICING SCHEDULE - COACHES

IMPORTANT NOTE
Refer to the manufacturers documentation included in this maintenance manual for specific manufacturer's maintenance requirements.

OPERATING CONDITION

Use the information that follows to determine the operating condition and usage applicable to your vehicle

Heavy	Normal
Between 5 and 6 mpg	Greater than 6 mpg
Between 39 and 50 L/100km	Less than 39 L/100km

LUBRICATION AND SERVICING SCHEDULE

H3 Series coaches

X3 Series coaches

H3 VIP commercial use

X3 VIP commercial use

A red stripe in the left margin of the schedule highlights the latest changes

PROCEED TO MAINTENANCE OPERATION EVERY

Proceed to maintenance operation at mileage indicated on odometer or specified number of month, whichever comes first

			Item	Month	6 250 mi / 10 000 km	12 500 mi / 20 000 km	31 250 mi / 50 000 km	50 000 mi / 80 000 km	100 000 mi / 160 000 km	106 000 mi / 170 000 km	125 000 mi / 200 000 km	150 000 mi / 240 000 km	185 000 mi / 300 000 km	250 000 mi / 400 000 km	300 000 mi / 500 000 km	500 000 mi / 800 000 km	600 000 mi / 960 000 km	Lubricant / Fluid [1]
GENERAL																		
1	Flexible hoses – thoroughly inspect all hoses			12				●										
01 ENGINE																		
1	regular drains	Engine oil & filter – heavy operating condition, change every 35 000mi / 60 000km	24															C
2	regular drains	Engine oil & filter – normal operating condition, change every 45 000mi / 75 000km	24															C
3	extended drains B	Engine oil & filter – heavy operating condition, change every 40 000mi / 65 000km	24															B
4	extended drains B	Engine oil & filter –normal operating condition, change every 55 000mi / 90 000km	24															B
5	extended drains A (factory filled)	Engine oil & filter – heavy operating condition, change every 45 000mi / 70 000km	24															A
6	extended drains A (factory filled)	Engine oil & filter – normal operating condition, change every 60 000mi / 95 000km	24															A
7	Air cleaner – change filter element when indicated by restriction indicator or after a maximum of 2 years		30	24														
8	Drive belt (water pump) – inspect for cracks or frayed material, change belt that display obvious wear or defects			12			●											★
9	Valve & injector clearance – initial adjustment		24	12								●						★
10	Valve & injector clearance – check & adjust		24	24											●			★
11	Drive belt tensioners & idlers (water pump, fan, alternators) – remove belts, check for noisy bearings, play, bushing play			3														★
12	Drive belt tensioners & idlers (water pump, fan, alternators) – change proactively											●						★
03 FUEL																		
1	Primary & secondary fuel filters – change at every engine oil change		21 22															
2	Preheater fuel filter – change		50	12				●										
04 EXHAUST AND AFTERTREATMENT SYSTEM																		
1	Diffuser assembly, rain cap & drain tube – check proper functioning, clean		34	12														
2	DEF pump filter – change		32	36								●						

★ = Specialty tool required. You will find the SPECIALTY TOOLS REQUIRED FOR REGULAR MAINTENANCE table and the LUBRICANTS SPECIFICATIONS table following this Lubrication and Servicing Schedule.

[1] See paragraph 6.0 FLUIDS AND LUBRICANTS SPECIFICATIONS of this section for lubricant specifications.

LUBRICATION AND SERVICING SCHEDULE

H3 Series coaches

X3 Series coaches

H3 VIP commercial use

X3 VIP commercial use

A red stripe in the left margin of the schedule highlights the latest changes

PROCEED TO MAINTENANCE OPERATION EVERY

Proceed to maintenance operation at mileage indicated on odometer or specified number of month, whichever comes first

		Item	Month	6 250 mi / 10 000 km	12 500 mi / 20 000 km	31 250 mi / 50 000 km	50 000 mi / 80 000 km	100 000 mi / 160 000 km	106 000 mi / 170 000 km	125 000 mi / 200 000 km	150 000 mi / 240 000 km	185 000 mi / 300 000 km	250 000 mi / 400 000 km	300 000 mi / 500 000 km	500 000 mi / 800 000 km	600 000 mi / 960 000 km	Lubricant / Fluid [1]
3	DEF tank – drain, clean with water, clean filler neck strainer	32	12								●						
4	Aftertreatment Hydrocarbon Injector (AHI) nuzzle – change										●						
5	DPF filter – either clean or change filter cartridge every 400 000mi / 650 000km																★
	05 COOLING																
1	Coolant surge tank – test coolant solution	27	12		●												★
2	**H3 only:** Radiator fan gearbox – check oil level	25	6		●												
3	**H3 only:** Radiator fan drive belt – inspect for cracks or frayed material, change belt that display obvious wear or defects		12			●											
4	Radiator – inspect exterior core & clean with low pressure water jet if necessary								●								
5	**H3 only:** Radiator fan gearbox – change oil	25	12						●								K
6	Coolant filter – change (Long-Life Filter without additives to be used with Extended Life Coolant)	28	12								●						
7	Cooling system – drain, flush & refill (Extended Life Coolant) every 750 000mi / 1 200 000km	27	96														E ★
	06 ELECTRICAL																
1	Power cables inspection – Perform MI15-24		3														
2	Battery terminals – clean & coat terminals with Nyogel		12														
3	HD10 Bosch alternators drive belt – inspect for cracks or frayed material, change belt that display obvious wear or defects		3			●											
	07 TRANSMISSION [2]																
1	**Allison transmission filled with TES389 approved fluid and Prognostics mode disabled** – change transmission fluid, Main & Lube filter (Refer to TABLE 1 in Section 07: Transmission for Main & Lube filter change intervals)	20															M
2	**Allison transmission filled with TranSynd or TES295 synthetic fluid only, no mixture[3,4] and Prognostics mode disabled** – change transmission fluid, Main & Lube filter (Refer to TABLE 2 in Section 07: Transmission for Main & Lube filter change intervals)	20															L
3	**Allison transmission filled with TranSynd or TES295 synthetic fluid only, no mixture[3,4] and Prognostics mode enabled** – change fluid & filters when indicated by TRANSMISSION SERVICE indicator or 60 months whichever occurs first. In addition, change filters with every fluid change	20	60														L
4	**Allison transmission filled with TES389 approved fluid with Prognostics mode enabled** – change fluid & filters when indicated by TRANSMISSION SERVICE indicator or 24 months whichever occurs first.	20	24														M

[2] In the absence of a fluid analysis program, the fluid change interval listed in Table 1, Table 2 & Table 3 should be used. Change filters according to Table 1, Table 2 & Table 3 even if a fluid analysis shows that the fluid doesn't need to be changed.

[3] When the transmission contains a mixture of fluids (defined as the quantity of non-TranSynd or non-TES 295 fluid remaining in the transmission after a fluid change combined with the quantity of TranSynd or TES295 required to fill the transmission to the proper level), perform the fluid and filter change according to the TES389 intervals.

[4] Extended TranSynd or TES 295 fluid and filter change intervals are only allowed with Allison High-Capacity filters.

LUBRICATION AND SERVICING SCHEDULE

H3 Series coaches

X3 Series coaches

H3 VIP commercial use

X3 VIP commercial use

A red stripe in the left margin of the schedule highlights the latest changes

PROCEED TO MAINTENANCE OPERATION EVERY

Proceed to maintenance operation at mileage indicated on odometer or specified number of month, whichever comes first

		Item	Month	6 250 mi / 10 000 km	12 500 mi / 20 000 km	31 250 mi / 50 000 km	50 000 mi / 80 000 km	100 000 mi / 160 000 km	106 000 mi / 170 000 km	125 000 mi / 200 000 km	150 000 mi / 240 000 km	185 000 mi / 300 000 km	250 000 mi / 400 000 km	300 000 mi / 500 000 km	500 000 mi / 800 000 km	600 000 mi / 960 000 km	Lubricant / Fluid [1]
	In addition, change filters with every fluid change.																
5	Transmission oil cooler, change unit if vehicle is equipped with transmission retarder		24														
6	**Volvo I-Shift Transmission** – change fluid & filter	20	36										●				O
7	**Volvo I-Shift Transmission extended drains**[5] – change fluid & filter	20	60												●		N
	09 PROPELLER SHAFT																
1	Perform Spicer's Driveshaft "Inspection Procedures"[6]	18				●											
2	Grease one fitting on each universal joint	18	6					●									P
	10 FRONT I-BEAM AXLE																
1	Steering knuckle kingpins – grease two fittings per knuckle	8	6	●													P
2	Steering knuckle kingpins – inspect, check permissible slackness	8	6			●											
	11 REAR AXLES																
1	Meritor drive axle – check differential oil level, add if necessary every 25 000 mi	17	6														
2	Tag axle lever pivot – grease one fitting on each pivot	19	6	●													P
3	**Meritor** drive axle – change differential oil, clean breather	17	12					●									G
4	**Meritor** drive axle – change differential oil, clean breather (with full synthetic oil)	17	48										●				H
5	**ZF** Drive axle – check differential oil level, add if necessary at every engine oil change	17															I
6	**ZF** Drive axle – change differential oil and breather	17	36						●								I
	12 BRAKE & AIR SYSTEM																
1	Check proper functioning of the adjuster, check caliper running clearance, check caliper movement along guide pins, check sealing elements, at every pad replacements or once a year whichever comes first		12														
2	ABS & Electronic Stability Control systems – check proper functioning		12														★
3	Air tanks – drain water from all tanks		6		●												
4	Brake pads – check pad wear indicator. Visually check condition of the slack adjuster cap & guide pin covers				●												
5	Accessories air filter – change filter element	2	24					●									
6	Air dryer – change cartridge	13	24					●									
	13 WHEELS, HUBS & TIRES																
1	Unitized hub bearing, front and tag axle – inspect, check end play	8	12			●											★
2	Meritor drive axle bearing – check end play	17	12					●									
3	ZF Drive axle – check compact bearing axial play	17	12					●									★
4	ZF Drive axle – change grease in compact bearing	17	72												●		J ★
	14 STEERING																

[5] For normal and heavy operating conditions using oil approved for extended drains.

[6] Refer to "Spicer Driveshafts Service Manual DSSM0100".

LUBRICATION AND SERVICING SCHEDULE

H3 Series coaches

X3 Series coaches

H3 VIP commercial use

X3 VIP commercial use

A red stripe in the left margin of the schedule highlights the latest changes

		Item	Month	PROCEED TO MAINTENANCE OPERATION EVERY Proceed to maintenance operation at mileage indicated on odometer or specified number of month, whichever comes first														
				6 250 mi / 10 000 km	12 500 mi / 20 000 km	31 250 mi / 50 000 km	50 000 mi / 80 000 km	100 000 mi / 160 000 km	106 000 mi / 170 000 km	125 000 mi / 200 000 km	150 000 mi / 240 000 km	185 000 mi / 300 000 km	250 000 mi / 400 000 km	300 000 mi / 500 000 km	500 000 mi / 800 000 km	600 000 mi / 960 000 km	Lubricant / Fluid [1]
1	**I-beam**: Tie rod end ball joints – inspect for corrosion	5	12														
2	**I-beam**: Tie rod ends – clean & grease one fitting at each end	5	6	●													P
3	**I-beam**: Steering damper cylinder – grease one fitting at rod end	9	6	●													P
4	**ALL:** Drag link end ball joints – inspect for corrosion	3	12														
5	**IFS** [7]: Steering knuckle (king) pins – grease fitting on top		6	●													P
6	**IFS**: Tie rod ends – grease fitting		6	●													P
7	**IFS**: Drag link ends – clean and grease two fittings at each end		6	●													P
8	**IFS**: Idler arm – grease fitting		6	●													P
9	**IFS**: Bell crank – grease fitting		6	●													P
10	**IFS**: Relay rod ends – grease one fitting at each end		6	●													P
11	**IFS**: Steering knuckle (king) pins – check play	8	6			●											
12	**ALL**: Power steering reservoir filter element – change	23	12														
13	**ALL**: Power steering fluid – check fluid condition (color) through visual inspection and change if required. Check level, add if necessary	23	12					●									D
14	**ALL**: Steering system – check play	7	12									●					
	18 BODY																
1	Structure inspection for corrosion – Perform MI15-18 every 5 years for normal duty vehicles and normal environment operation																
2	Structure inspection for corrosion – Perform MI15-18, every 2 years starting from the 5th year in service for severe duty vehicles and harsh environment operation																
	22 HEATING & AIR CONDITIONING																
1	Evaporator compartment & driver's HVAC units – clean heater core with low air pressure		12														
2	Evaporator compartment & driver's HVAC units – clean evaporator core with low air pressure		12														
3	Condenser compartment & driver's HVAC units – clean condenser core with low air pressure		12														
4	A/C compressor – check oil level, add if necessary	44	12														F
5	A/C compressor – change oil, clean oil filter and magnetic plug	44	36														F ★
6	A/C compressor – empty shaft seal oil collection tube	44	1	●													
7	A/C receiver tank – check refrigerant level, add if necessary	42	6	●													
8	Filter dryer unit – check refrigerant moisture indicator, change filter dryer unit according to moisture indicator	43	6	●													
9	Passenger's unit 2-part air filter – clean or change	45	6		●												
10	**X3 Series only**. Evaporator compartment door fresh air intake filter – clean or change		6		●												
11	Parcel rack fans air filter – clean or change	47	6		●												
12	Driver's HVAC unit return air filter – clean or change	41	6		●												
13	A/C compressor drive belt – check tension, inspect for cracks or frayed material		12			●											

[7] IFS=Independent Front Suspension

LUBRICATION AND SERVICING SCHEDULE

H3 Series coaches

X3 Series coaches

H3 VIP commercial use

X3 VIP commercial use

A red stripe in the left margin of the schedule highlights the latest changes

PROCEED TO MAINTENANCE OPERATION EVERY

Proceed to maintenance operation at mileage indicated on odometer or specified number of month, whichever comes first

		Item	Month	6 250 mi / 10 000 km	12 500 mi / 20 000 km	31 250 mi / 50 000 km	50 000 mi / 80 000 km	100 000 mi / 160 000 km	106 000 mi / 170 000 km	125 000 mi / 200 000 km	150 000 mi / 240 000 km	185 000 mi / 300 000 km	250 000 mi / 400 000 km	300 000 mi / 500 000 km	500 000 mi / 800 000 km	600 000 mi / 960 000 km	Lubricant / Fluid [1]
	23 ACCESSORIES																
1	AFSS extinguisher tank – change or rebuild		72														
2	AFSS extinguisher tank – test hydrostatically		144														

3.1 COACHES LUBRICATION AND SERVICING SCHEDULE CHANGE LOG

	CHANGE LOG - LUBRICATION AND SERVICING SCHEDULE	DATE
1	ADDED: 11 REAR AXLES – Lubrication intervals for ZF drive axle. 13 REAR AXLES – ZF drive axle compact bearing maintenance	Apr.26, 2016
2	ADDED: 14 STEERING – Steering system play inspection	Aug.18, 2016
3	REMOVED: 06 ELECTRICAL – HD10 Bosch alternators brushes inspection & replacement	Nov.10, 2016
4	UPDATE: 01 ENGINE – Engine oil & filter change interval extended if using appropriate oil	Dec.15, 2016
5	REMOVED: 05 COOLING – Coolant filter – change at every engine oil change (…with Fully Formulated Coolant)	Dec.15, 2016
6	REMOVED: 05 COOLING – Cooling system – drain, flush & refill (fully formulated coolant)	Dec.15, 2016
7	UPDATE: 01 ENGINE – Drive belt tensioners & idlers – check for noisy bearings, play, bushing play, was 300 000mi, changed to 3 months	June 7, 2017
8	ADDED: 01 ENGINE – Drive belt tensioners & idlers – change proactively	June 7, 2017
9	UPDATE: 06 ELECTRICAL – HD10 Bosch alternators drive belt – inspection, was 12 months, changed to 3 months	June 7, 2017
10	UPDATE: 14 STEERING – Power steering fluid drain, was 50 000mi, changed to “check condition at 100 000mi”	Nov.15, 2017
11	UPDATE: 14 STEERING – Power steering reservoir filter element change, was 50 000mi/12 months, changed to 12 months	Nov.15, 2017
12	UPDATE: 22 HEATING & AIR CONDITIONING – change oil, clean oil filter – recommended servicing changed to a formal servicing	Nov.15, 2017
13		
14		
15		
16		
17		
18		
19		
20		

4 SPECIALTY TOOLS REQUIRED FOR REGULAR MAINTENANCE OF THE VEHICLES

Use this list of specialty tools in conjunction with the LUBRICATION AND SERVICING SCHEDULE

SPECIALTY TOOLS REQUIRED FOR REGULAR MAINTENANCE				
#	MAINTENANCE DESCRIPTION	TOOL #	SPECIALITY TOOL DESCRIPTION	PART #
01 ENGINE				
8,11,12	drive belts and idlers	1	belt tensioner wrench	010032
9, 10	valves & injectors	2	engine cranking adapter	88840317
		3	feeler gauge 2.45-2.55	88880052
		4	feeler gauge set	85111377
		5	setting tool 3.20, 3.85	88800232
03 FUEL				
1	Davco Fuel Pro 382 system	6	collar spanner wrench	530224
04 EXHAUST AND AFTERTREATMENT SYSTEM				
5	DPF filter – either clean or change	7	DPF removal tool	680790
05 COOLING				
1	test coolant solution	8	refractometer coolant/DEF	88890105
7	cooling system drain, flush & refill	9	coolant extractor (optional)	85112740
		10	tube with connector (optional)	9996049
06 ELECTRICAL				
		11	none	
07 TRANSMISSION				
		12	none	
09 PROPELLER SHAFT				
		13	none	
10 FRONT AXLE				
		14	none	
11 REAR AXLE				
		15	none	
12 BRAKE & AIR SYSTEM				
2	ABS & Electronic Stability Control systems – check proper functioning	16	ACOM diagnostic software available free of charge	Bendix website
13 WHEEL, HUBS & TIRES				
1	Hub bearing, front & tag axle – inspect	17	dial indicator with magnetic base	*

#	MAINTENANCE DESCRIPTION	TOOL #	SPECIALITY TOOL DESCRIPTION	PART #
3	ZF Drive Axle - check compact bearing axial play	18	14 mm hex drive socket	*
		19	E20 Torx socket (external)	*
		20	dial indicator with magnetic base	*
4	ZF Drive Axle - change grease in compact bearing	18	14 mm hex drive socket	*
		19	E20 Torx socket (external)	*
		21	spanner wrench 5870 401 146	N67817-21
		22	lifting bracket 5870 281 043	19400451
		23	driver 5870 050 007	19400449
		24	handle 5870 260 004	N67817-19
		25	driver 5870 051 053	N67817-16
		26	seal installer 5870 651 085	19400265
		27	pry bar 5870 345 071	N78017-20
14 STEERING				
		28	none	
16 SUSPENSION				
		29	none	
18 BODY				
		30	none	
22 HEATING & AIR CONDITIONING				
5	A/C compressor – change oil, clean oil filter	31	Refrigerant recovery unit	

*: Common tool. Contact your local tool supplier

5 LUBRICATION AND SERVICING SCHEDULE - MOTORHOMES

LUBRICATION AND SERVICING SCHEDULE H3-45 VIP & X3-45 VIP MOTORHOMES (Private Use) A red stripe in the left margin of the schedule highlights the latest changes	ITEM	EVERY (months)	LUBRICANT / FLUID [8]
GENERAL			
All flexible hoses **–** inspect		12	
H3 VIP Series only: Main power compartment fan air filter – inspect		12	
01 ENGINE			
Engine oil and filters – change	24	12	A B C
Air cleaner – change filter element	30	24	
Engine mounted alternators & house alternator(s) – change drive belts and intermediary drive belts		24	
Coolant pump drive belt – change		24	
Valves and injectors – initial adjustment: after 2 500 hours or 36 months whichever occurs first	24	36	
Valves and injectors – check and adjust: every 5 000 hours or 72 months whichever occurs first	24	72	
03 FUEL			
Primary fuel filter & secondary fuel filter – change at every engine oil change	21, 22		
04 EXHAUST AND AFTERTREATMENT SYSTEM			
DPF filter – either clean or change filter cartridge after 4 500 hours	33		
Aftertreatment Hydrocarbon Injector (AHI) nuzzle – change after 4 500 hours			
DEF tank – drain and clean with water, clean filler neck strainer	32	12	
Diffuser assembly, rain cap & drain tube – check proper functioning, clean	34	24	
DEF pump – change filter element	32	36	
05 COOLING			
Radiator fan gearbox – check oil level, add if required	25	12	K
Coolant surge tank – test coolant solution	27	12	
Coolant filter – change (Long-Life filter with Extended Life Coolant)	28	12	
Radiator fan drive belt – inspect for cracks or frayed material, change if required	25	24	
Radiator fan gearbox – change oil	25	48	K
Cooling system – drain, flush & refill (with Extended Life Coolant)	27	96	E
06 ELECTRICAL			
Battery terminals – clean and coat terminals		12	
Power cables inspection – Perform MI15-24		24	
07 TRANSMISSION [9]			
Filled with TES389 approved fluid, with **Prognostics mode disabled** – see TABLE 1 in *Section 07: Transmission* for fluid and filter change	20		M
Filled with TranSynd or TES295 approved fluid only, no mixture[10], with **Prognostics mode disabled** – See TABLE 2 in *Section 07: Transmission* for fluid and filter change	20		L

[8] See paragraph 6.0 of this section for lubricant specifications.
[9] In the absence of a fluid analysis program, the fluid change interval listed in Table 1, Table 1 & Table 3 should be used. Change filters according to Table 1, Table 2 & Table 3 even if a fluid analysis shows that the fluid doesn't need to be changed.

LUBRICATION AND SERVICING SCHEDULE H3-45 VIP & X3-45 VIP MOTORHOMES (Private Use) A red stripe in the left margin of the schedule highlights the latest changes	ITEM	EVERY (months)	LUBRICANT / FLUID [8]
Filled with TranSynd or TES295 approved fluid only, no mixture with **Prognostics mode enabled** [11] - Change fluid & filters when indicated by TRANSMISSION SERVICE indicator or 60 months whichever occurs first. In addition, change filters with every fluid change.	20	60	L
Filled with TES389 approved fluid only, no mixture with **Prognostics mode enabled** – Change fluid & filters when indicated by TRANSMISSION SERVICE indicator or 24 months whichever occurs first. In addition, change filters with every fluid change.	20	24	M
09 PROPELLER SHAFT			
Universal joint – grease on fitting on each universal joint	18	12	P
11 REAR AXLE			
Drive axle – check differential oil level, add if necessary	17	12	
Drive axle – change differential oil, clean breathers	17	12	G
Tag axle lever pivot, grease one fitting on each pivot	19	12	P
Drive axle – change differential oil, clean breathers (with full synthetic oil)	17	48	H
12 BRAKE & AIR			
Air tanks – drain water from all tanks		12	
Brake pads[12] – check pad wear indicator		12	
Check caliper running clearance, check condition of caliper cover, slack adjuster cap and guide pin assembly covers		12	
ABS & electronic stability control systems – check proper functioning		12	
Air dryer – change cartridge	13	24	
Accessories air filter – change filter element	2	48	
13 WHEELS, HUBS & TIRES			
Unitized hub bearing, front and tag axle – inspect, check end play	8	12	
14 STEERING			
Steering knuckle (king) pins – check play	8	12	
Steering knuckle (king) pins – grease fitting on top	8	12	P
Tie rod ends – clean and grease one fitting at each end		12	P
Drag link ends – clean and grease two fittings at each end		12	P
Tie rod end & drag link end ball joints – inspect for corrosion		12	
Power steering reservoir filter element – change	23	24	
Power steering fluid – check fluid condition (color) through visual inspection and change if required. Check level, add if necessary	23	12	D
Idler arm – grease fitting		12	P
Bell crank – grease fitting		12	P
Relay rod ends – grease one fitting at each end		12	P
Steering system – check play		60	
16 SUSPENSION			
Independent front suspension upper a-arm ball joint – grease fittings		12	Q

[10] When the transmission contains a mixture of fluids (defined as the quantity of non-TranSynd/ non-TES 295 fluid remaining in the transmission after a fluid change combined with the quantity of TranSynd or TES295 required to fill the transmission to the proper level), perform the fluid and filter change according to the TES389 intervals.

[11] Extended TranSynd or TES295 fluid and filter change intervals are only allowed with Allison High-Capacity filters.

[12] At each pad replacement, check slack adjuster operation, perform caliper slide check and inspect visually all sealing elements & caps.

LUBRICATION AND SERVICING SCHEDULE H3-45 VIP & X3-45 VIP MOTORHOMES (Private Use) A red stripe in the left margin of the schedule highlights the latest changes	ITEM	EVERY (months)	LUBRICANT / FLUID [8]
22 HEATING & AIR CONDITIONING			
A/C compressor – check oil and replenish if required	44	12	F
A/C compressor (Bitzer) – empty shaft seal oil collection tube	44	1	
A/C compressor (Bitzer) – check oil level	44	12	
A/C compressor (Bitzer) – change oil, clean oil filter and magnetic plug	44	36	
A/C receiver tank – check refrigerant level, add if required	42	12	
Refrigerant moisture indicator – check filter dryer unit, change according to moisture indicator	43	12	
HVAC air filters – clean all filter elements	41, 45	12	
A/C compressor drive belt – check tension, inspect for cracks or frayed material, change if required		24	

5.1 MOTORHOMES LUBRICATION AND SERVICING SCHEDULE CHANGE LOG

	CHANGE LOG - LUBRICATION AND SERVICING SCHEDULE	DATE
1	ADDED: 04 EXHAUST & AFTERTREATMENT SYSTEM - Diffuser assembly, rain cap & drain tube – check proper functioning, clean	Sept.04, 2014
2	UPDATE: 05 COOLING – Cooling system with extended life coolant, drain flush & refill, was 48 months, changed to 96 months	Jan.08, 2015
3	ADDED: 06 ELECTRICAL – Power cables inspection	May 27, 2015
4	ADDED: 04 EXHAUST AND AFTERTREATMENT SYSTEM – AHI nuzzle replacement	Aug.12, 2015
5	ADDED: 14 STEERING – Steering system play inspection	Aug.18, 2016
6	UPDATE: 14 STEERING – Steering system play inspection, was 48 months, changed to 60 months	Sept.18, 2016
7	REMOVED: 06 ELECTRICAL –HD10 Bosch alternators brushes inspection & replacement	Nov.10, 2016
8	UPDATE: 14 STEERING – Power steering fluid drain, changed to “check condition”	Nov.15, 2017
9	UPDATE: 14 STEERING – Power steering reservoir filter element change, was 12 months, changed to 24 months	Nov.15, 2017
10	ADDED: 22 HEATING & AIR CONDITIONING – check oil level, change oil, clean oil filter and magnetic plug	Nov.15, 2017
11		
12		

6 FLUIDS AND LUBRICANTS SPECIFICATIONS

Coaches Schedule	FLUIDS & LUBRICANTS TABLE		Motorhomes Schedule
REF	**SYSTEMS**	**DESCRIPTIONS / SPECIFICATIONS**	
A	Engine Oil	Extended drains A	SAE Viscosity Grade: 10W-30 [1] Filled with "**Volvo Premium Motor Oil VDS-4.5**"
B	Engine Oil	Extended drains B	SAE Viscosity Grade: 10W-30 [1] Filled with other Volvo Approved VDS-4.5 oils
C	Engine Oil	Regular drains	SAE Viscosity Grade: 10W-30 [1] Filled with "**Volvo Premium Motor Oil VDS-4**"
D	Power Steering fluid	Automatic Transmission Fluid (ATF), Dexron-IIIF, G, H or Dexron-VI Refer to **Bosch List of lubricants TE-ML 09** for further details	
E	Engine Coolant	Texaco or Chevron Extended Life Coolant (ELC) 50% antifreeze/water solution is normally used	
F	A/C Compressor Oil	Central HVAC system: Polyolester oil, HFC 134a compatible; Castrol SW-68 (POE) or equivalent Small HVAC system: PAG oil	
G	Meritor drive axle	**Regular drains**	Refer to Meritor technical bulletin **TP-9539 Approved Rear Drive Axle Lubricants**
H	Meritor drive axle	**Extended drains with Full Synthetic**	Refer to Meritor technical bulletin **TP-9539 Approved Rear Drive Axle Lubricants**
I	ZF Drive Axle	Chevron Multigear Oil 80W-90 (ZF Lubricant Class 12M) Refer to ZF **List of lubricants TE-ML 12** for other approved lubricants. Take note that oil change intervals will differ when using other lubricant class	

Coaches Schedule	FLUIDS & LUBRICANTS TABLE		Motorhomes Schedule
REF	**SYSTEMS**	**DESCRIPTIONS / SPECIFICATIONS**	
J	ZF Drive Axle compact bearing (hub unit)	**ZF Grease Class 12H** Fuchs Europe Schmierstoffe GMBS/Renolit LXPEP-2 Lithium saponified, multipurpose grease, NLGI No. 2, Refer to ZF **List of lubricants TE-ML 12** for other approved lubricants. Take note that grease change intervals may differ when using other lubricant class	
K	Cooling Fan Gearbox Oil	Synthetic gear lubricant 75W-90 (refer to Linnig bulletin *142.377* for the list of approved oils)	
L	Allison Transmission Oil	**Extended drains**	Castrol TranSynd™ Synthetic Transmission Fluid for Allison or TES 295 approved equivalent
M	Allison Transmission Oil	**Regular drains**	Schedule1 TES-389 fluids or approved equivalent
N	Volvo I-Shift Transmission	**Extended drains**	- Volvo I-Shift Transmission Fluid 75W-80 - Mobil Delvac Synthetic Transmission Oil V30 75W-80 (Factory filled) or other Volvo approved oils [13]
O	Volvo I-Shift Transmission	**Regular drains**	Castrol Syntrans Grade SAE 75W-85 synthetic oil or other Volvo approved oils [13]
P	Multi Purpose Grease	Good quality lithium-base grease: NLGI No.2 Grade is suitable for most temperatures NLGI No.1 Grade is suitable for extremely low temperatures	
Q	Multi Purpose Grease	Molykote longterm 2/78 grease	

[13] For the complete list of Volvo-approved oils, refer to "Approved oils Engine and I-Shift Transmission" found on your Technical Publications USB flash drive

6.1 FLUIDS AND LUBRICANTS SPECIFICATIONS CHANGE LOG

	CHANGE LOG	DATE
1	Lubricant And Coolant Specifications Table – Dexron-VI removed from Ref I. Dexron-VI is no longer recommended for use in commercial on-highway transmission. Allison Service Tip #1099revS	Nov.11, 2015
2	I-Shift transmission: Castrol Syntrans Grade SAE 75W-85 synthetic oil is no longer approved for extended drains interval	Nov.25, 2015
3	Added: Lubricants “I” & “J” for ZF drive axle	Apr.26, 2016
4	New Engine oil specification VDS-4.5 (CK-4) introduced. New oil specification compatible with former D13 engine versions	Dec.15, 2016
5	Power steering fluid, Dexron VI added	Nov.15, 2017
6		
7		
8		
9		
10		

CONTENTS

SECTION CHANGE LOG **4**

1 TORQUE TABLES **5**

2 OVERVIEW **9**

2.1 INNER STOPPER 11
2.1.1 Maintenance *11*
2.1.2 Adjustment *11*
2.2 "IN LIMIT" STOPPER 12
2.2.1 Maintenance *12*
2.2.2 Adjustment *12*
2.3 EXTERIOR EXTRUSION 12

3 SECURITY PIN **13**

3.1 MAINTENANCE 13
3.2 AIR CYLINDER REPLACEMENT 13

4 ROOF REINFORCING ROD **13**

5 RACK **14**

5.1 MAINTENANCE 14
5.2 FRONT SLIDE-OUT RACK REPLACEMENT 14
5.3 REAR SLIDE-OUT RACK REPLACEMENT 14

6 PINION **15**

6.1 PINION AND KEYLESS BUSHING POSITIONING 15
6.2 FRONT SLIDE-OUT SHAFT PINION REPLACEMENT 15
6.3 REAR SLIDE-OUT SHAFT PINION REPLACEMENT 16
6.4 KEYLESS BUSHING 16
6.4.1 Installation *16*

7 ELECTRIC MOTOR **19**

7.1 MAINTENANCE 19
7.2 REPLACEMENT 19

8 SPEED REDUCTION GEARBOX **19**

8.1 MAINTENANCE 19
8.2 GEARBOX REPLACEMENT 19

9 JAW COUPLINGS **20**

9.1 MAINTENANCE 20
9.2 REPLACEMENT & ADJUSTMENT 20

10 FLANGE BEARING **20**

11 LOCKING COLLAR **21**

11.1 INSTALLATION 21

12 LINEAR BEARING AND RAIL **21**

12.1 BEARING MAINTENANCE 21
12.2 BEARING REPLACEMENT & ADJUSTMENT 21

12.3 LEVEL & TILT ADJUSTMENT 22
12.3.1 Procedure 22
12.4 RAIL MAINTENANCE 23
12.5 RAIL REPLACEMENT 23

13 ACETAL PLASTIC BLOCKS 24

13.1 REMOVAL / INSTALLATION 24

14 SLIDE-OUT PNEUMATIC SYSTEM 25

14.1 DESCRIPTION 25
14.2 MAINTENANCE 26
14.3 SEAL 26
14.3.1 Maintenance 27
14.3.2 Seal assembly removal 27
14.3.3 Seal assembly installation 27
14.3.4 Slide-out 2" inside retraction 27

15 SLIDE-OUT ELECTRICAL SYSTEM 29

15.1 ELECTRICAL INTERCONNECTION WITH PREVOST VEHICLE 29
15.2 SLIDE-OUT BREAKERS / FUSES 29
15.2.1 Multiplex fuses 29
15.3 PROBING VOLTAGE ON THE MULTIPLEX CIRCUITS 30
15.4 MODULE REPLACEMENT 30
15.5 SLIDE-OUT LIMIT SENSORS 30
15.5.1 Maintenance and adjustment 30

16 SLIDE-OUT EXTERIOR FINISHING PANELS & WINDOWS 31

17 WELDING PRECAUTION 31

18 SLIDE-OUT MANUAL OVERRIDE PROCEDURES 31

18.1 PRELIMINARY CONDITIONS FOR MANUAL OVERRIDE PROCEDURE 31
18.1.1 Manual retracting procedure – Front and rear slide-out 32
18.1.2 Manual extending procedure – Front and rear slide-out 32

19 SLIDE-OUT MAXIMUM LOAD 33

20 PREVOST SLIDE-OUT WITH FLUSH FLOOR (H3-45 VIP) 35

20.1 MECHANISM OVERVIEW (H3-45 VIP) 35
20.1.1 Control system overview 37
20.2 INNER STOPPERS 38
20.2.1 Maintenance 39
20.2.2 Adjustment 39
20.3 TILT AND LEVELING 39
20.4 ROOM EXTENSION FOR MAINTENANCE 39
20.5 SLIDE-OUT REMOVAL 41
20.6 SLIDE-OUT INSTALLATION 41
20.7 LINEAR SENSOR ADJUSTMENT 41
20.8 MANUAL EXTENSION OF THE SLIDE-OUT 41
20.8.1 Manual extension on failure of only one motor 41
20.9 MOBILE FLOOR HAND CRANK PROCEDURE 42
20.10 FLOOR LIFT COMPONENT MAINTENANCE 42
20.11 INFLATABLE SEAL 42
20.12 FINISHING PRECAUTIONS FOR CONVERTERS 42

21 CONVERSION CHECKLIST 43

22 TROUBLESHOOTING 43

22.1 ERROR CONDITION OR MISSING OPERATION CONDITION 43
22.2 TROUBLESHOOTING – OPERATING CONDITIONS, CONTROL & MECHANICAL COMPONENTS 45
22.3 SLIDE-OUT FAULT MESSAGE ON DID 50

SECTION CHANGE LOG

	DESCRIPTION	DATE
1		
2		
3		
4		
5		
6		

1 TORQUE TABLES

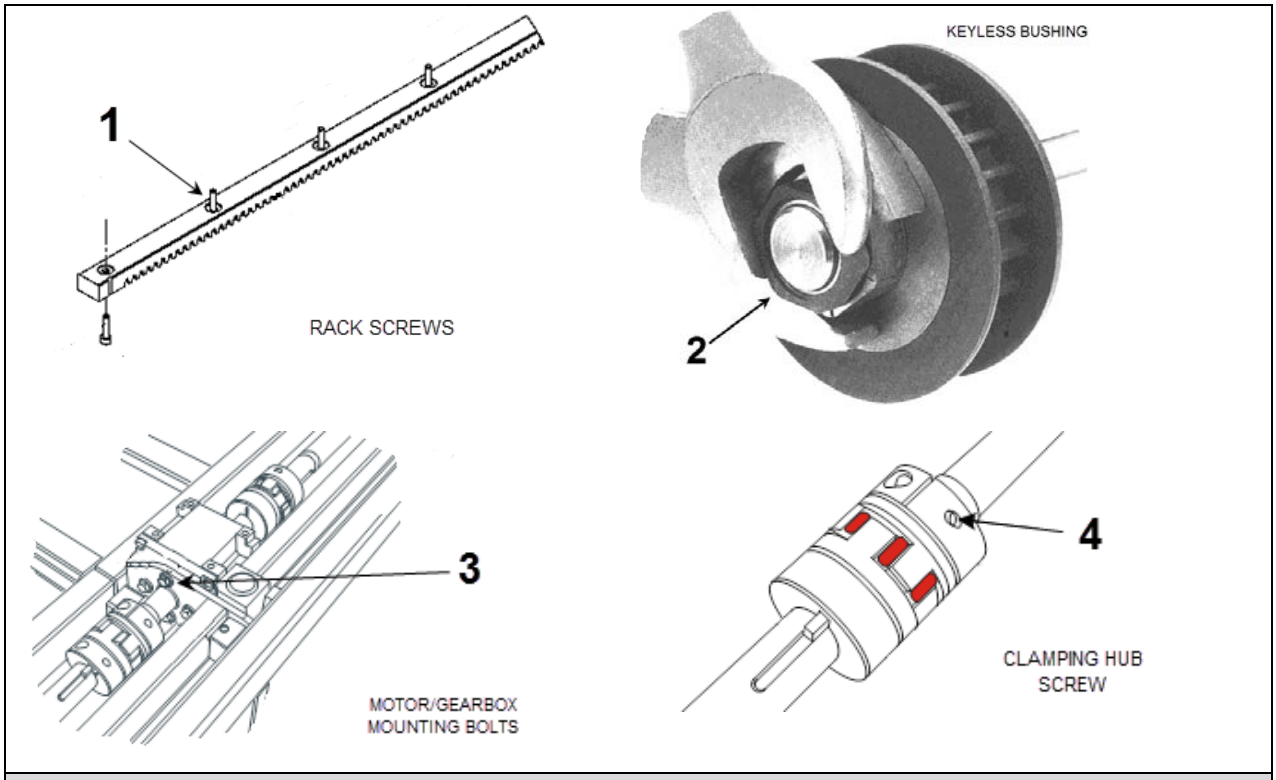

STANDARD PREVOST SLIDE-OUT		
No	DESCRIPTION	TORQUE
1	Rack mounting bolt	1.9-2.1 lb-ft (3-3 Nm) maximum
2	Keyless bushing	120-130 lb-ft (163-176 Nm)
3	Drive motor/gearbox assembly mounting bolts	16-20 lb-ft (22-27 Nm)
4	Jaw coupling clamping hubs screw	16-20 lb-ft (22-27 Nm)

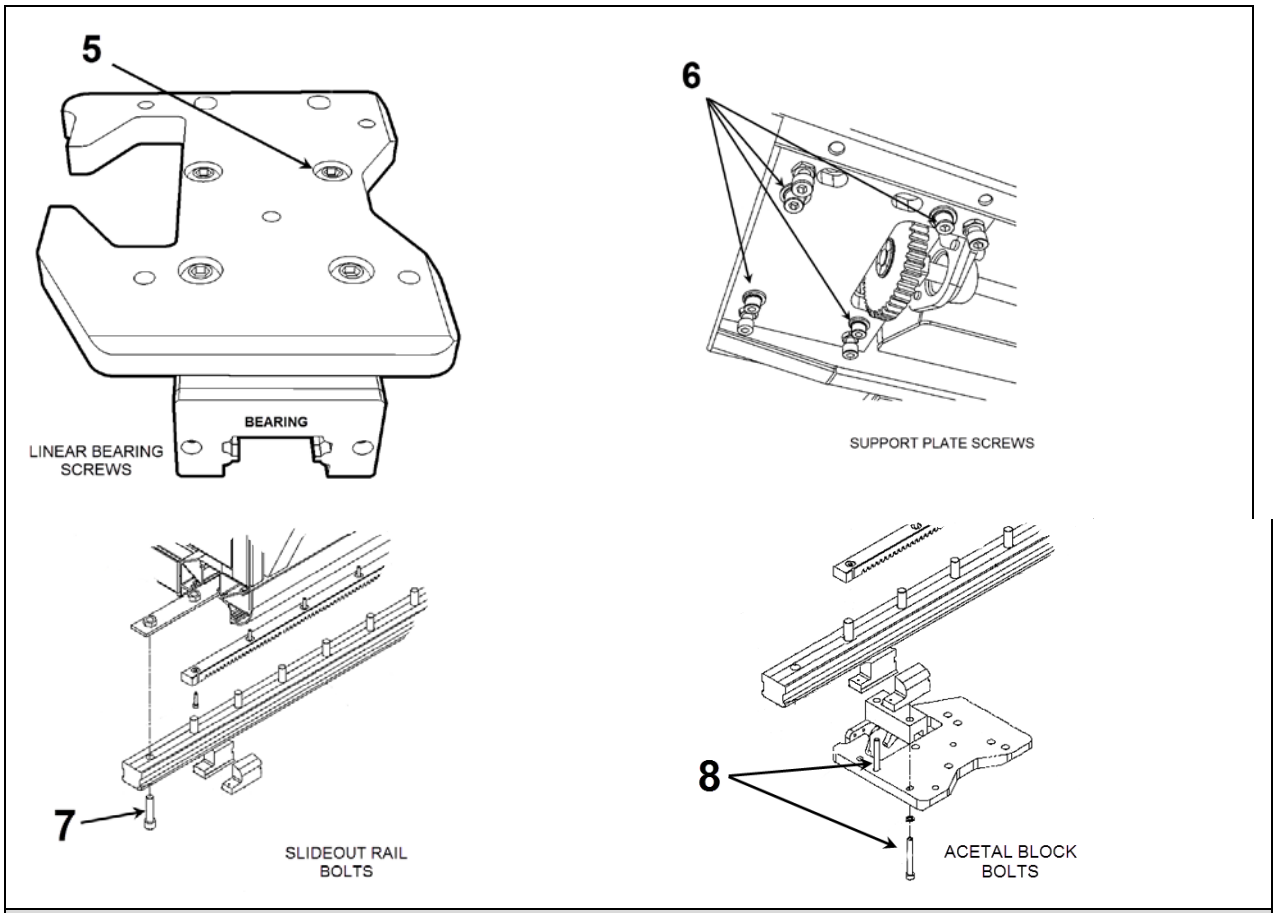

STANDARD PREVOST SLIDE-OUT		
No	DESCRIPTION	TORQUE
5	Linear bearing mounting screws	59 lb-ft (80 Nm)
6	Linear bearing support plate retaining screws	45-55 lb-ft (61-75 Nm)
7	Rail mounting bolts	90-100 lb-ft (122-136 Nm)
8	Acetal block mounting bolts	6.5-7.5 lb-ft (9-10 Nm)

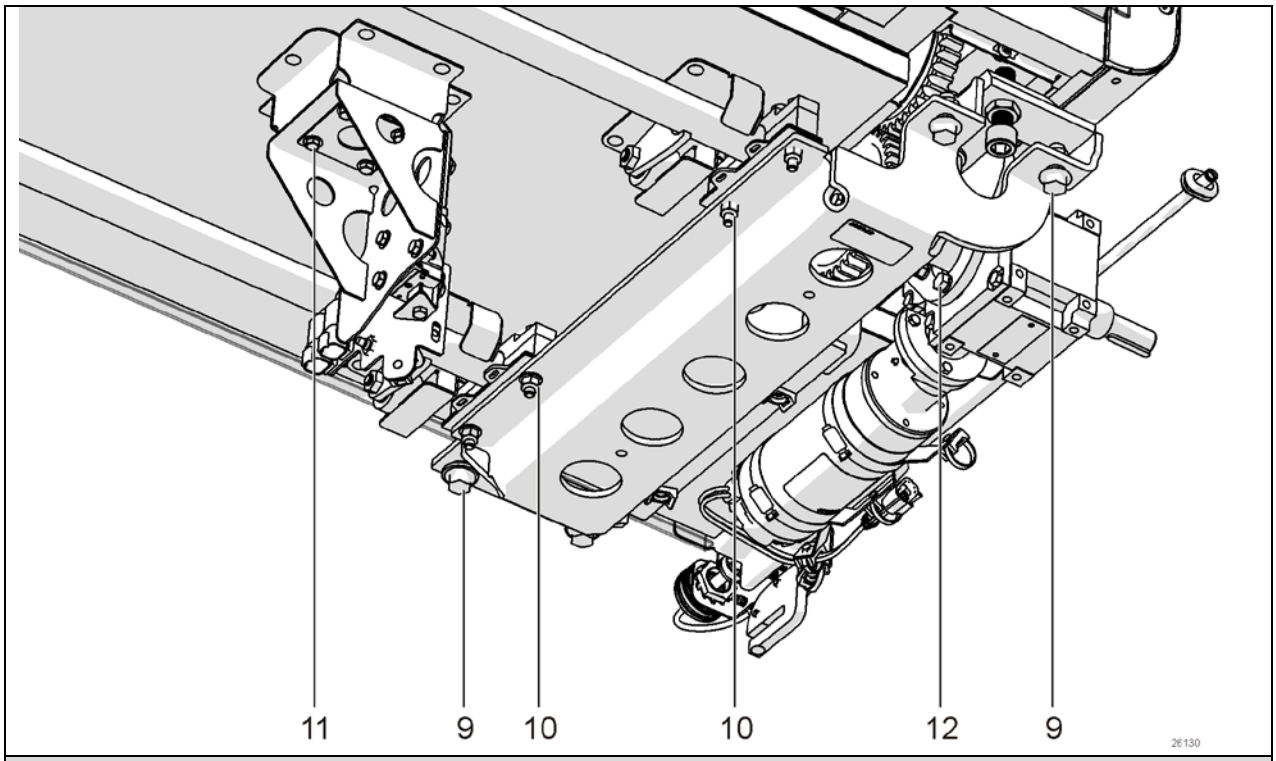

PREVOST SLIDE-OUT WITH FLUSH FLOOR		
No	DESCRIPTION	TORQUE
9	Stacked bearing assembly mounting bolts (8)	59 lb-ft (80 Nm)
10	Floor lift shaft bearing clamp screws(16)	13.7 lb-ft (18.6 Nm)
11	Floor to linear bearing bracket screws (8)	17 lb-ft (23 Nm)
12	Drive motor/gearbox assembly mounting bolts (8)	16-20 lb-ft (22-27 Nm)

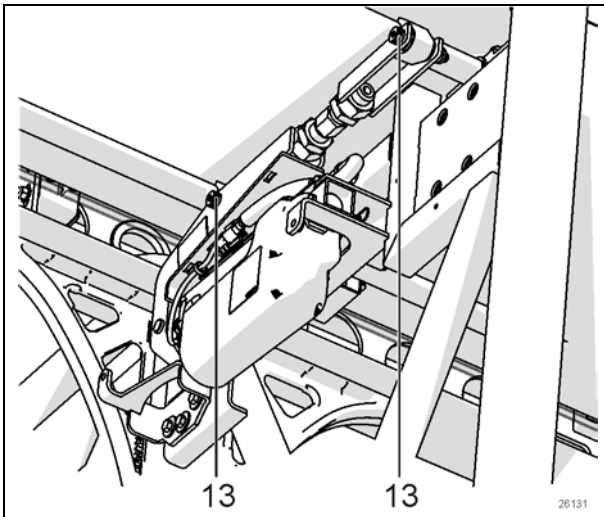

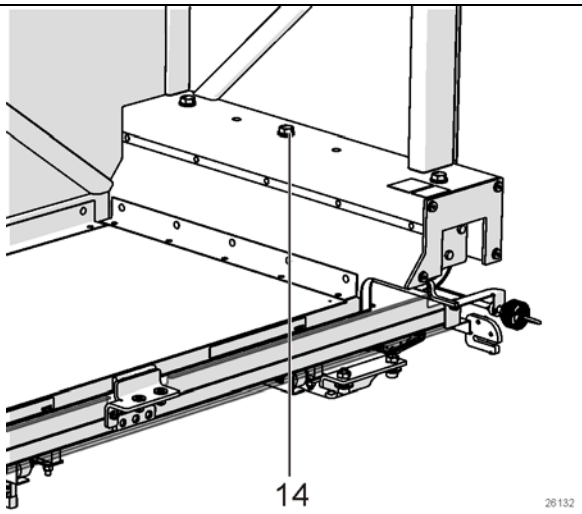

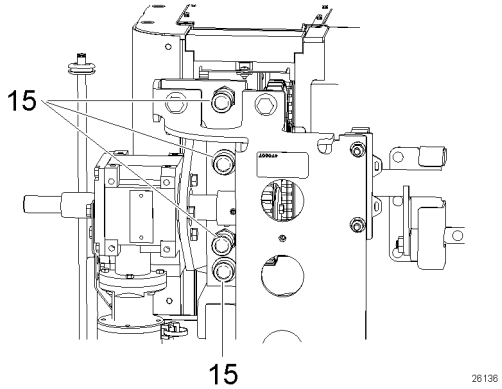

PREVOST SLIDE-OUT WITH FLUSH FLOOR		
No	DESCRIPTION	TORQUE
13	Transfer arm to lift shaft screws (2)	35 lb-ft (47 Nm)
14	Slide-out room to rail mounting bolts (6)	130 lb-ft (176 Nm)
15	Linear bearing support plate retaining screws	45-55 lb-ft (61-75 Nm)

2 OVERVIEW

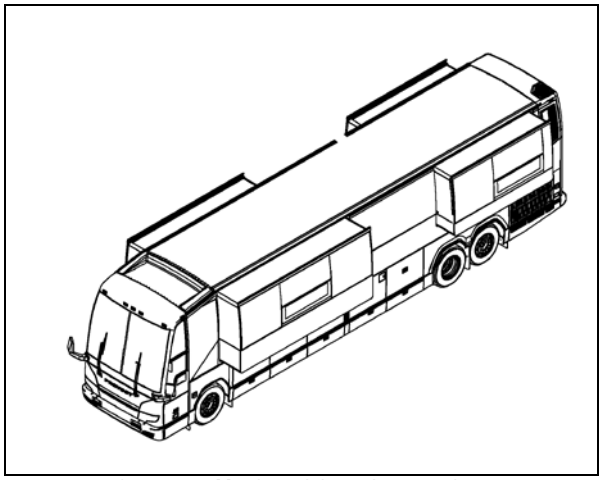

FIGURE 1: H3-45 VIP TYPICAL CONFIGURATION

H3-45 VIP vehicles can accommodate up to 4 Prevost slide-outs units. Exclusive to the H3-45 VIP in the front right (curb side) position you will find a Prevost slide-out with *flush floor system*.

Due to the high current demand and safety requirements of the slide-out system, room operation is on a "first in, first served" basis, meaning only one slide-out unit may be operated at a time.

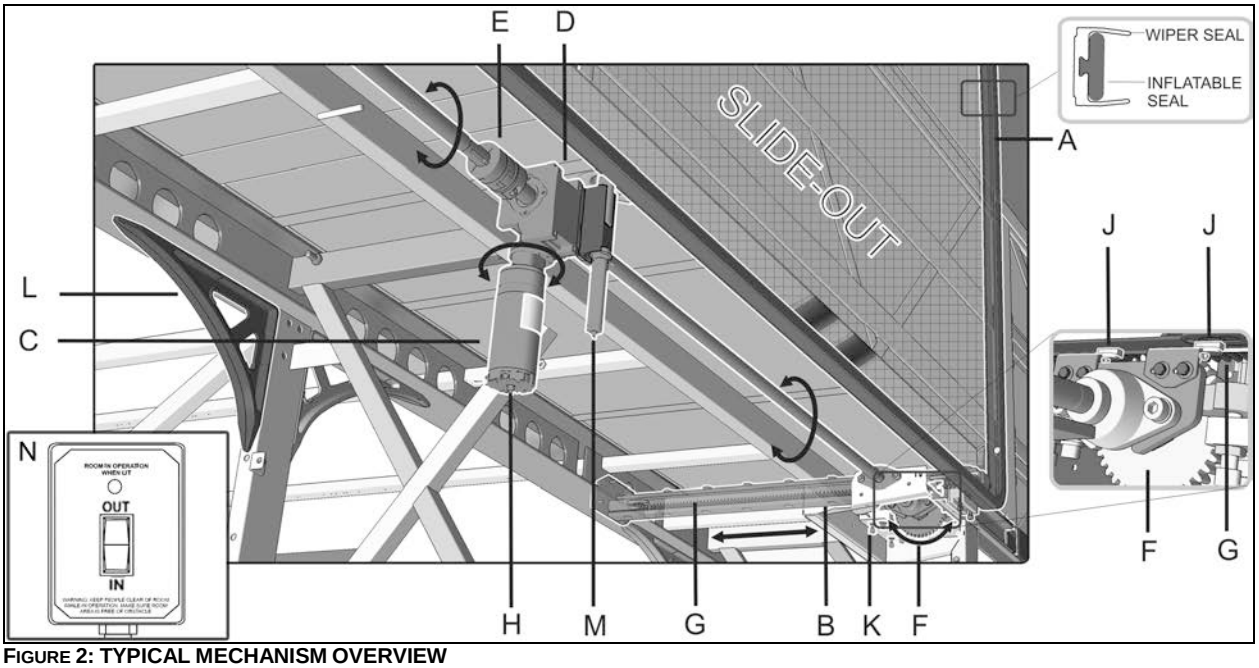

FIGURE 2: TYPICAL MECHANISM OVERVIEW

Each slide-out is moved in and out on rails resting on linear bearings Figure 2, (**B**). Power comes from one electrical motor (**C**). It is either oriented vertically or horizontally. The motor drives a right angle speed reducing gearbox (**D**).

Water tightness of the slide-out is ensured by a wiper seal and an inflatable seal (**A**).

The gearbox is coupled to a drive shaft with Lovejoy jaw couplings (**E**) and two pinion gears (**F**). Rack gears (**G**) transform pinion gear rotation into horizontal motion. Manual extension or retraction is possible

by the motor shaft extension (**H**). Closely follow instructions provided further in this manual to perform this procedure.

The system includes in and out limit proximity sensors (**J**) and physical inner and outer stoppers.

Tilt and leveling adjustment is carried-out by the adjustment plate and screws (**K**).

Structural integrity of the vehicle platform is ensured with stainless steel casting corner reinforcements (**L**) in the luggage bays and a roof reinforcement rod for the front slide-out.

A security pin locks the slide-out in the retracted or “in” position for road travel. (**M**)

Extension and retraction of the slide-out room is performed using the Control Pad (**N**). One control pad per room is provided. Final location of the control pad may vary from one vehicle to another depending on interior layout and vehicle converter.

Logic control and operation is achieved by using the same Volvo multiplex modules found on the vehicle chassis. Troubleshooting is performed through the DID.

The flip-down control panel is typically located in the first road side luggage bay, attached to the ceiling.

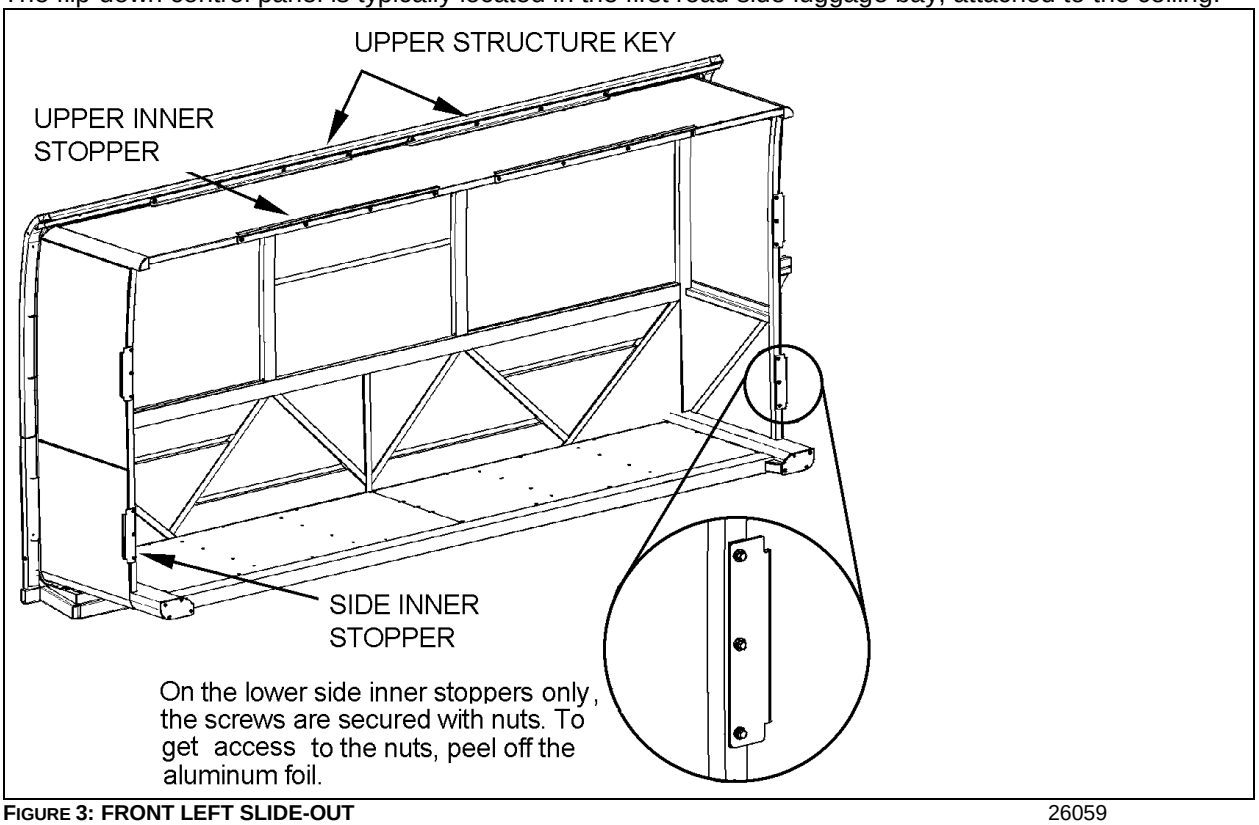

FIGURE 3: FRONT LEFT SLIDE-OUT 26059

2.1 INNER STOPPER

The front left slide-out is equipped with six inner stoppers laid out in the following way: two stoppers on the top horizontal member of the slide-out (Figure 3), and two stoppers on each vertical upright, while the rear slide-out is equipped with only three stoppers (Figure 4). The upper inner stoppers are used to provide a support to position perpendicularly the slide-out with the vehicle structure.

The side inner stoppers are used to block the extension of the slide-out. They act as ultimate physical limits but take note that when the “out limit” sensors are properly adjusted, the slide-out extension stops before the side inner stoppers reach the side structure keys (Figure 3 & Figure 4).

2.1.1 Maintenance

Check that the inner stopper screws are tight and that no damage or deformation has taken place for both the side and the upper stoppers.

2.1.2 Adjustment

1. Adjust the side inner stoppers at 1/8" from the vehicle side structure keys, and tighten the screws. Make sure there is a minimum gap of 2mm (0.079”) between the side inner stopper and the slide-out window pane side (Figure 5). Use shim as required.
2. Adjust the upper structure key and the upper inner stoppers according to Figure 6 with the seal deflated. When inflating, the seal presses the roof structure upward and at that moment, the upper inner stopper comes into contact with the upper structure key.

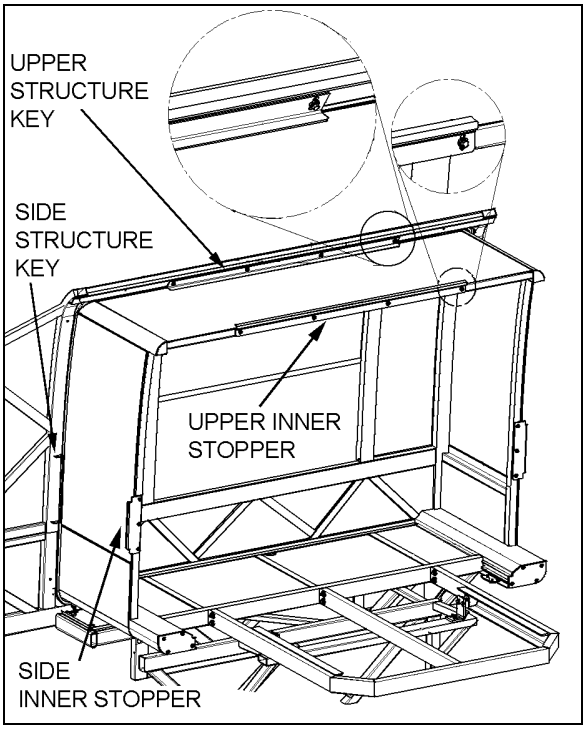

FIGURE 4: REAR SLIDE-OUT 26044

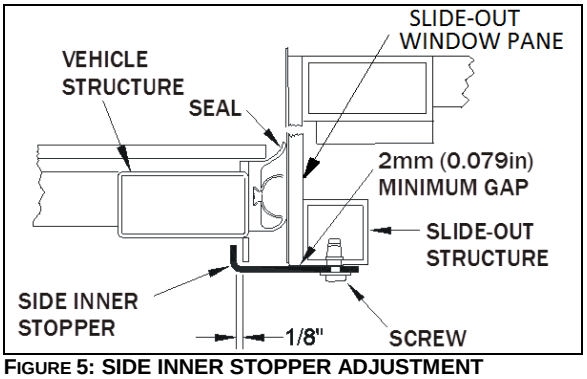

FIGURE 5: SIDE INNER STOPPER ADJUSTMENT

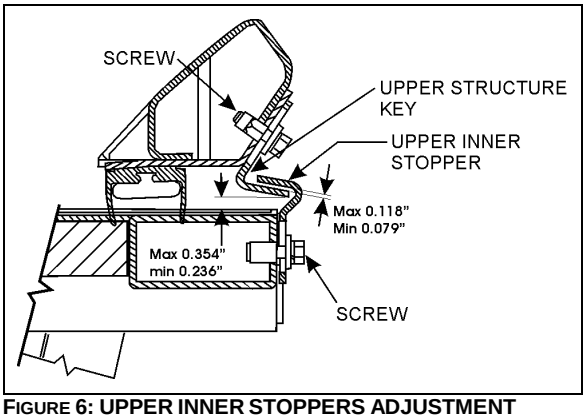

FIGURE 6: UPPER INNER STOPPERS ADJUSTMENT

2.2 "IN LIMIT" STOPPER

Each slide-out has four "in limit" stoppers. Two "in limit" stoppers are mounted under the slide-out, next to the rail (Figure 7) and two other. "in limit" stoppers are mounted on the exterior extrusion at the top of the slide-out (Figure 8). These stoppers are used to position the outer face of the slide-out flush with the vehicle body when retracted.

2.2.1 Maintenance

Check that the "in limit" stoppers are clean and that there is no foreign matter accumulated between the stopper and their bearing surface. Check that the screws and set screws (where applicable) locking the stoppers in proper position are tight.

2.2.2 Adjustment

NOTE
To properly adjust the "in limit" stoppers, the slide-out system must be turned off to prevent the "in limit" sensors from stopping the slide-out movement before having the "in limit" stoppers contacting their bearing surface.

1. Extend the slide-out partially.
2. Set the ignition switch to the OFF position.
3. To adjust the lower "in limit" stoppers, loosen the set screw and then rotate the stopper CW or CCW to move it back or forward depending on the required adjustment. To adjust the upper plastic "in limit" stoppers, add or remove shims as required between the stopper and the extrusion.
4. Using the manual override procedure (paragraph 18), move the slide-out up to its full "in" position.
5. Using a straight edge, check if the outer face of the slide-out is flush with the vehicle body with the stoppers contacting their bearing surface. Readjust the stoppers if necessary.
6. Readjust the "in limit" sensor.

NOTE
To make sure that the lower "in limit" stoppers are contacting their bearing surface (the acetal plastic blocks) when the slide-out is closed, put white paint on the "in limit" stopper before and check if the acetal plastic blocks are marked with paint.

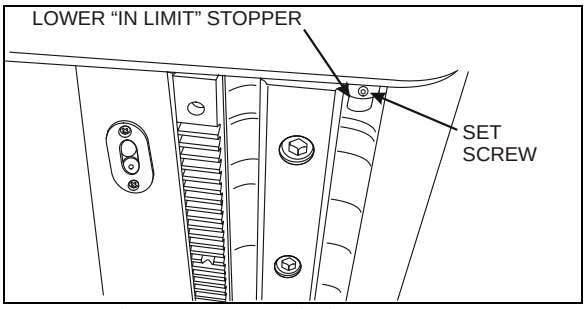

FIGURE 7: LOWER "IN LIMIT" STOPPER

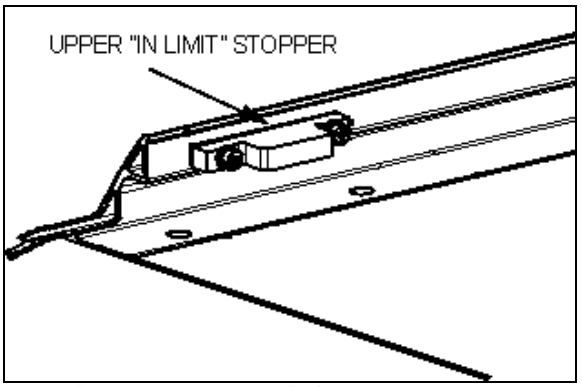

FIGURE 8: UPPER "IN LIMIT" STOPPER

2.3 EXTERIOR EXTRUSION

The exterior extrusion function is to provide a leaning surface for the inflatable seal. When inflating, the seal leans against the extrusion and presses the roof structure upward until it rests on the inner side of the extrusion.

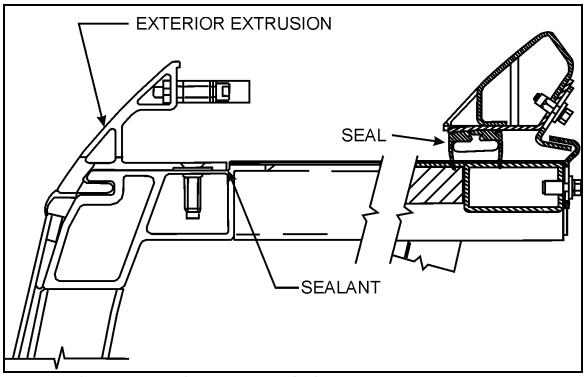

FIGURE 9: EXTERIOR EXTRUSION

Maintenance

Inspect the exterior extrusion for any deformation or deterioration. Check that the screws are tight. Inspect sealant condition on screw heads and between the extrusion and the vehicle structure, and also at both ends of the extrusion. If needed, clean old sealant and

replace with Sika 221 sealant or equivalent product.

3 SECURITY PIN

During normal ride, the slide-out cannot extend by itself because the 740:1 ratio speed reduction worm gear type gearbox system is not reversible, the output shafts are self-locking. The security pin purpose is to lock the slide-out in retracted position if an accident occurs. It is built to withstand great lateral acceleration of the slide-out.

The system consists of a stainless steel pin connected to a single action/spring return pneumatic cylinder (Figure 10). The pin engages in the slide-out receptacle with releasing of the parking brake. A knocking sound may be heard at this moment. An O-ring is located at the base of the pin housing to reduce knocking when the pin retracts. The lower hole on the pin housing permits water to drain. The upper hole permits to insert a small screwdriver to prevent the pin from rotating when the air cylinder has to be removed.

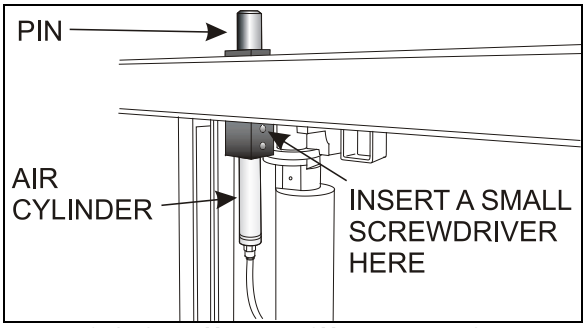

FIGURE 10: SECURITY PIN AIR CYLINDER REMOVAL

3.1 MAINTENANCE

Inspect air cylinder and fitting for air leaks. Periodically, check that the pin retracts and engages in the receptacle as it should when the parking brake is applied or released.

To extend the slide-out, it must be at full “IN” position with the engine running. If the pin produces excessive knocking when it engages upon parking brake release, reduce air cylinder speed by adjusting the air flow regulator on the pneumatic control panel (Figure 32, item 15).

3.2 AIR CYLINDER REPLACEMENT

1. Ensure the parking brake is applied.
2. Disconnect the cylinder air tubing from the 2nd baggage compartment (front slide-out) or under the bed structure (rear slide-out).
3. Using a wrench at its lower end, unscrew the air cylinder from the pin housing.
4. Insert a small screwdriver through the pin and housing to prevent rotation of the pin an then, unscrew the cylinder rod from the pin.
5. Transfer the fitting on the new cylinder. Place Teflon on threads.
6. Cylinder installation is like removal but in reverse order.

4 ROOF REINFORCING ROD

CAUTION

The front slide-out roof reinforcing rod may have to be adjusted after a load variation inside the vehicle or on the top of the vehicle.

CAUTION

Always lock the turnbuckle using the jam nut to prevent loosening.

The roof reinforcing rod is located on the upper horizontal member of the front slide-out opening and is welded on the roof arches (Figure 11).

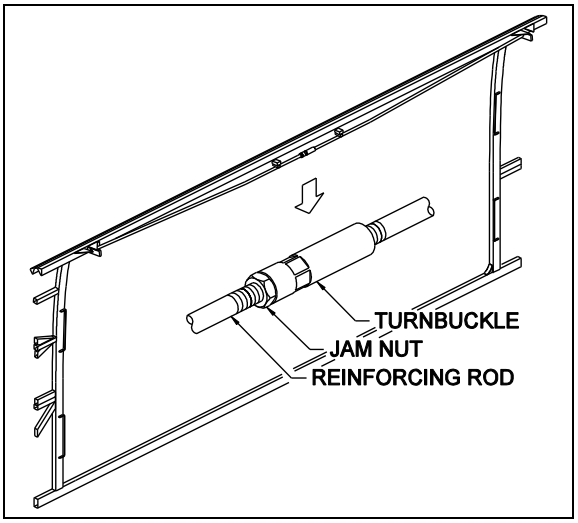

FIGURE 11: FRONT SLIDE-OUT ROOF REINFORCING ROD

This rod allows an adjustment between the slide-out horizontal member and the roof. When screwing the turnbuckle, the roof is moved upward, and vice versa. Maximum allowable adjustment upward is 3mm (1/8”). Exceeding this value may damage the mechanism.

Use this rod to adjust the horizontal member parallel to the slide-out. A member not parallel with the slide-out may cause the inflatable seal to leave the wiper seal or may reduce the inflatable seal and wiper seal efficiency.

CAUTION

Do not exceed 3mm (1/8”) upward adjustment.

5 RACK

Slide-out movement is made by a system of racks and pinions. There are two racks on each slide-out.

5.1 MAINTENANCE

Once a year, check the racks for broken or worn tooth, especially the front slide-out racks. Also, check the rack fastening hole teeth that are weaker and might break (Figure 12). Replace the racks if excessive wear is present. Clean racks from sand or other debris. Check that the racks are properly secured. Check the backlash between the gear and the rack. Excessive backlash indicates rack wear.

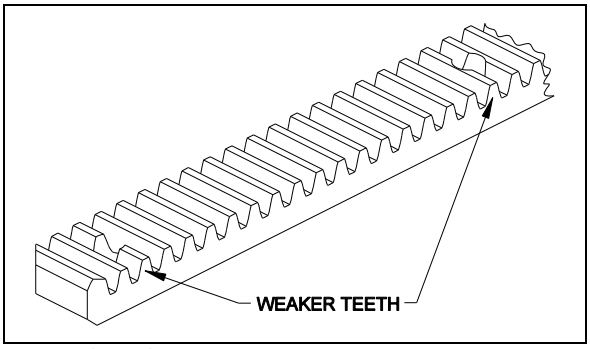

FIGURE 12: RACK

5.2 FRONT SLIDE-OUT RACK REPLACEMENT

1. Remove the slide-out from the vehicle (removal must be performed according to the Slide-Out Removal Procedure. Ask your Prevost service representative).
2. From under the slide-out, unscrew all the rack screws and remove the rack.
3. Install a new rack and tighten the screws. Use Loctite™ 242 or equivalent product on threads.

   TORQUE: 1.9-2.1 lb-ft (3-3 Nm) MAX

4. Reinstall the front slide-out inside the vehicle.

CAUTION

The counter boring required for recessed screw heads reduces plastic thickness. Do not torque higher than specified.

5.3 REAR SLIDE-OUT RACK REPLACEMENT

1. Using the slide-out control pad or the manual override procedure (paragraph 18, if using the manual override procedure, do not forget to deflate the inflatable seal completely), extend the slide-out about one foot.
2. From outside, unscrew and remove only the first two screws of the rack to be changed.
3. Using the manual override procedure (paragraph 18) only, retract the slide-out to its fully closed position.
4. Loosen the pinion keyless bushing of the rack to be changed.
5. From under the slide-out, unscrew all the rack screws and remove the rack.
6. Install a new rack between the slide out structural rack seat and the pinion and tighten the screws. Use Loctite™ 242 or equivalent product.

   TORQUE: 1.9-2.1 lb-ft (3-3 Nm)

CAUTION

The counterboring required for recessed screw heads reduces plastic thickness. Do not torque higher than specified.

7. Tighten the pinion keyless bushing as described in paragraph 6.4.
8. Using the slide-out manual override procedure only, extend the slide-out about one foot.

9. Tighten the two remaining screws. Use Loctite™ 242 or equivalent product.

   TORQUE: 1.9-2.1 lb-ft (3-3 Nm) MAX

10. Using the slide-out control pad key or the manual override procedure, retract the slide-out to its fully closed position.

11. Re-inflate the air seal and confirm pressure is around 11 psi on the pressure gage. (Item 7, Figure 32)

6 PINION

CAUTION

Make sure all keyless bushings are tightened to specification before moving the slide-out. Refer to paragraph 6.4 for torque wrench settings. A lower torque value may cause the bushing to slip on the shaft, and a higher torque value may break the bushing.

TORQUE: 120-130 lb-ft (163-176 Nm)

6.1 PINION AND KEYLESS BUSHING POSITIONING

For trouble-free operation, respect the dimensions and configuration shown on the following figure.

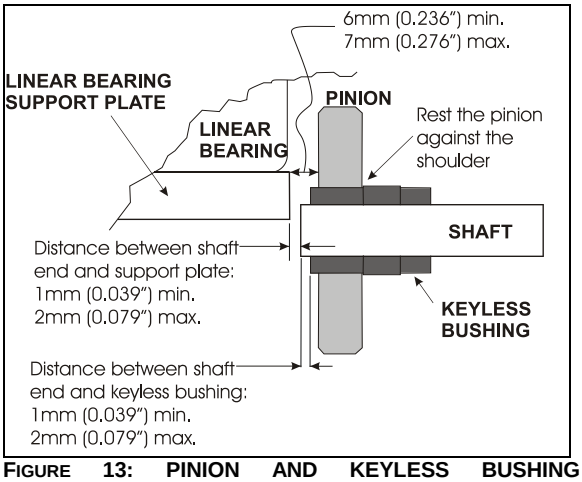

FIGURE 13: PINION AND KEYLESS BUSHING POSITIONING

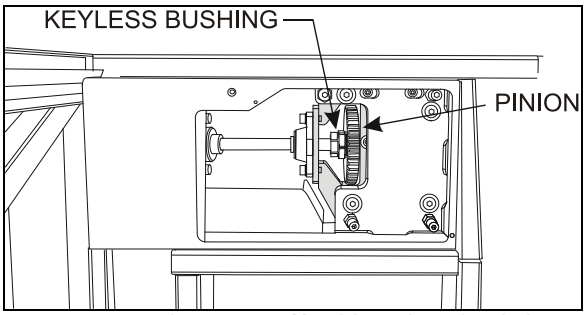

FIGURE 14: PINION AND KEYLESS BUSHING AS SEEN FROM EVAPORATOR COMPARTMENT

6.2 FRONT SLIDE-OUT SHAFT PINION REPLACEMENT

CAUTION

Before reinstalling the pinion, clean the following surfaces with alcohol to prevent slippage.

- o Pinion bore;
- o Keyless bushing I.D. and O.D.;
- o Shaft.

Before proceeding with the front slide-out shaft pinion replacement, check the following conditions:

- The locking collars located on the side of the pinion being replaced are disengaged;
- The drive motor/gearbox assembly is removed (see paragraph 8.2);

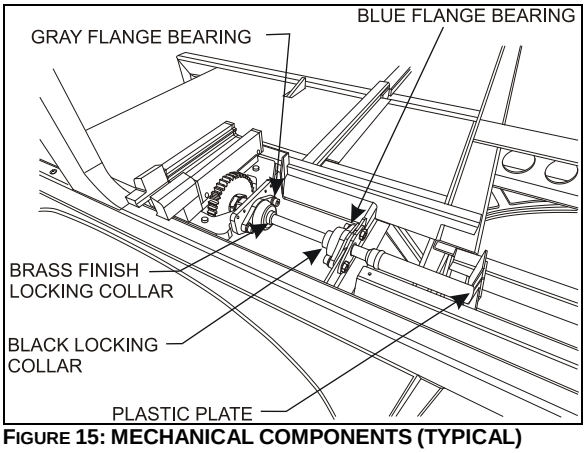

FIGURE 15: MECHANICAL COMPONENTS (TYPICAL)

1. Loosen the keyless bushing (see paragraph 6.4) of the pinion to be replaced. Slide the pinion and its bushing out of the shaft. Check the keyless bushing condition and replace if needed.

NOTE
If necessary, loosen the blue and gray flange bearing to move the pinion away from the rack.

2. Assemble new pinion on the keyless bushing and then slide on the shaft. Do not tighten the bushing at this moment.
3. Properly position the shaft end in relation to the linear bearing support plate (See Figure 13) and then tighten the locking collars to maintain the shaft in that position.
4. Position pinion and keyless bushing as shown on Figure 13 and tighten the keyless bushing as described in paragraph 6.4.
5. Reinstall the drive motor/gearbox assembly.

CAUTION

Make sure the keyless bushing is tightened to specification before moving the slide-out. Refer to paragraph 6.4.1 for torque wrench settings.

TORQUE: 120-130 lb-ft (163-176 Nm)

6.3 REAR SLIDE-OUT SHAFT PINION REPLACEMENT

The procedure is similar to the front slide-out shaft pinion replacement. Gain access to the mechanism from under the bed structure. Refer to paragraph 6.2.

6.4 KEYLESS BUSHING

The keyless bushings need a specific tightening torque value to ensure proper pinion transmitting torque. They also need specific tools to be tightened.

To tighten or loosen the keyless bushing, use those specific tools:

- crowfoot wrench 1 ½";
- torque wrench;
- combination wrench 1 ¾";
- pipe wrench;
- drive extension 5";
- socket 1 ½".

6.4.1 Installation

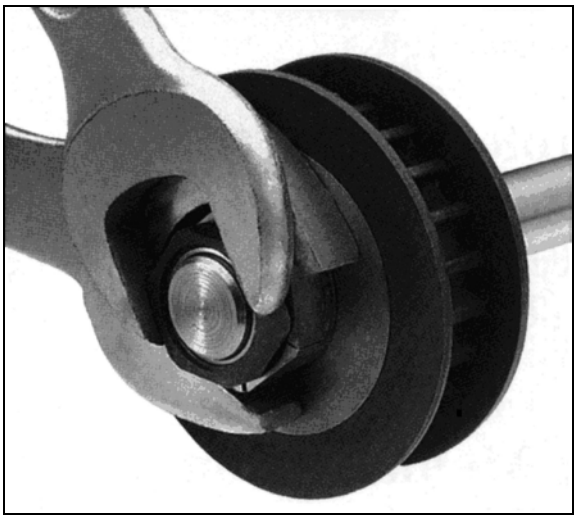

FIGURE 16: KEYLESS BUSHING TIGHTENING

To tighten the keyless bushing, use a special open-end wrench to retain the yellow part and another wrench to tighten the black part. Figure 18 shows how to tighten the keyless bushing. When tightening, make sure the pinion does not move or rotate.

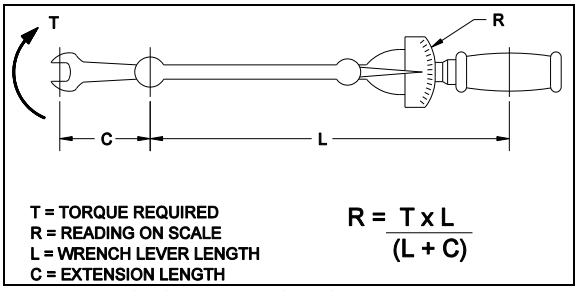

FIGURE 17: TORQUE WRENCH FORMULA

CAUTION

Make sure all keyless bushings are tightened to specification before moving the slide-out. A lower torque value may cause the bushing to slip on the shaft, and a higher torque value may break the bushing. The torque may need to be recalculated depending of the wrench size. Refer to Figure 17 for wrench size compensation.

TORQUE: 120-130 lb-ft (163-176 Nm)

Take note that when the keyless bushing nut is tightened, the pinion moves about 1/16" to 3/32" toward the slide-out center.

NOTE
On the front slide-out, the driver side keyless bushing is not accessible for tightening or removal unless you remove the front left wheel. If the slide-out has been removed, this keyless bushing should be tightened before reinstalling the slide-out.

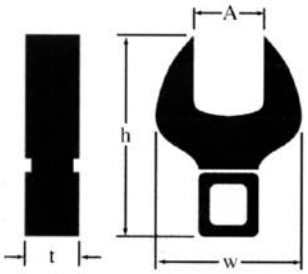

Style C
Installation Nut

WRENCHES FOR INSTALLATION

Fenner Drives offers a complete line of high-quality crowfoot wrenches for installation and to provide counter-torque. These wrenches are much narrower than earlier designs and are specifically for use with Trantorque GT units. It is recommended that both wrenches be used when installing a Trantorque GT unit.

1/2" SQUARE DRIVE

Shaft Size	Part Number	Wrench Style	Dimensions (inches)			
			A	h	w	t
13/16 to 1	6202990024	C	1-1/2	3.44	2.75	0.75

INSTALLATION INSTRUCTIONS

A Trantorque GT Keyless Bushing offers flexible and easy installation while providing exceptional holding power. To ensure a Trantorque GT unit performs as specified, it must be installed properly.

Warning: Use no lubricants in this installation.

1. Shaft and component bore must be within ±0.003"(±0.08mm) [±0.0015"(±0.04mm)Mini Series] of stated bore diameter and must have a surface finish of 32-125 Ra (roughness average). If the surface finish is outside these specified values, consult Fenner Drives.

2. Both shaft and component bore must be completely free of paint, grease, oil, and dirt. If necessary, clean the surfaces with a non-petroleum based solvent, such as isopropyl alcohol.

Warning: Do not lubricate the Trantorque GT bushing or shaft. The use of any lubricant on the contact surfaces could result in bushing failure and will void all warranties.

3. Insert the Trantorque GT unit into the component to be mounted, making sure the mating hub is flush against the shoulder at the hex flats.

4. Position the assembly at the desired location on the shaft and hand-tighten the nut (clockwise) until the assembly becomes snug on the shaft.

Warning: Do not hammer or use any type of impact to force the Trantorque GT assembly along the shaft.

Warning: The shaft must fully engage the shaft gripping area (Figure 1) of the Trantorque GT unit. Figure 2 illustrates minimum shaft engagement.

5. Using a torque wrench, tighten the nut to the proper installation torque. See table for torque value. (Note: Fenner Drives has available crowfoot wrenches for square drives in sizes from 1/2" to 3-1/2".) The hex flats on the outer ring are provided for counter-torque, eliminating the need to hold the component or shaft while applying installation torque.

Note: At full installation torque, the assembly will have moved approximately ±0.075"(±1.9mm)[±0.045"(±1.1mm)Mini Series] axially along the shaft away from the nut. If axial position is critical it may be necessary to loosen the nut and reposition the assembly.

Warning: Over-tightening the nut could damage the Trantorque GT unit and/or the mounted component.

Do not use an impact wrench in the installation.

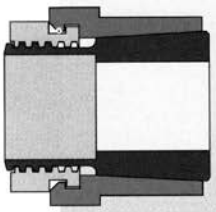

Figure 1

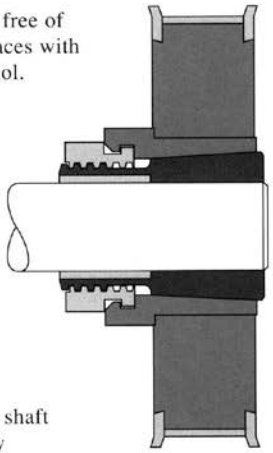

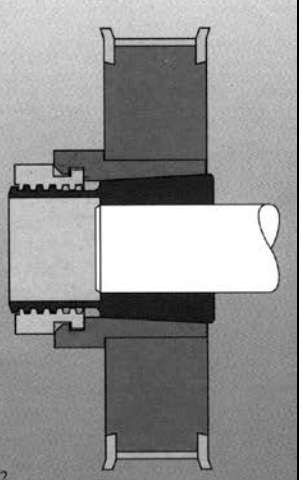

Figure 2

Installation Torque on Nut

	Inch Pound System		Metric System	
	Shaft Size	In.Lbs.	Shaft size	N-m
MINI SERIES	3/16–1/4	125	5–6mm	14.1
	5/16–3/8	150	7–9mm	17.0
	7/16–1/2	175	10–12mm	19.8
	9/16–5/8	200	14–16mm	22.6
	3/4	700	17mm	80.0
STANDARD SERIES	5/8–3/4	1200	15–19mm	136
	13/16–1	1500	20–25mm	170
	1-1/16–1-1/4	2000	28–32mm	225
	1-5/16–1-1/2	2300	34–38mm	260
	1-9/16–1-3/4	2800	40–42mm	316
	1-13/16–2	4900	45–50mm	554
LARGE SERIES	2-1/16–2-1/4	5300	55mm	600
	2-5/16–2-1/2	5600	60mm	635
	2-9/16–2-3/4	6000	65–70mm	680
	2-13/16–3	6600	75mm	750

FIGURE 18: KEYLESS BUSHING INSTALLATION INSTRUCTIONS

7 ELECTRIC MOTOR

The power is supplied by a 24V, 1/3 HP electric motor coupled with a speed reduction gearbox.

Opposite to the gearbox, the motor is equipped with a 10 mm hexagonal shaft extension allowing slide-out movement without the control pad.

This shaft extension is used to move the slide-out at low speed during the inner stoppers adjustment, the tilt adjustment or the 2" inside retraction.

See paragraph 18 for the manual override procedures.

CAUTION

When moving the slide-out with a cordless power drill as described in the manual override procedure, be careful as the slide-out approaches the open or closed position, in order not to overload the mechanism.

7.1 MAINTENANCE

Inspect the electrical connections and water seal condition. Check that the mounting bolts are tight (Figure 20).

7.2 REPLACEMENT

1. The slide-out must be retracted half way in.

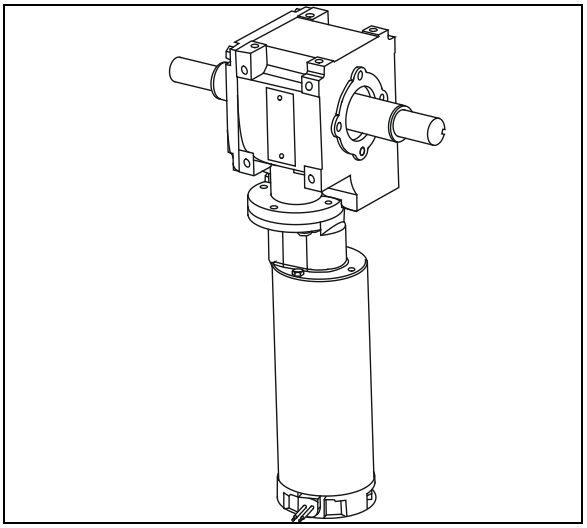

FIGURE 19: ELECTRIC MOTOR AND SPEED REDUCTION GEARBOX

2. Unplug the electric cable connector.
3. Remove the motor from the gearbox.
4. Fasten the new motor to the gearbox using screws.
5. Re-connect the electric cable connector.

8 SPEED REDUCTION GEARBOX

The speed reduction gearbox used is a helical worm gear type. This gearbox has a 2-stage 740:1 ratio and the output shafts are self-locking. Keys on output shafts are glued into keyseats.

8.1 MAINTENANCE

Inspect the gearbox to check if there is any leakage or backlash in the box. Replace the gearbox if excessive wear is present. Check that all bolts are tight.

The gearbox is lubricated for life and the oil should not have to be changed.

8.2 GEARBOX REPLACEMENT

1. The slide-out must be retracted half way in.
2. Disengage the shaft jaw couplings (refer to paragraph 9: JAW COUPLING).
3. Remove the 4 cap screws securing the drive motor/gearbox assembly and dismount the assembly.
4. Remove the gearbox from the motor and install the new one.
5. Reinstall the drive motor/gearbox assembly on the vehicle mounting bracket. Tighten mounting bolts in a criss-cross patern.

TORQUE: 16-20 lb-ft (22-27 Nm)

CAUTION

To prevent damaging threads, use your fingers to drive the bolts into the aluminum gearbox housing mounting holes.

6. Reinstall the jaw couplings.

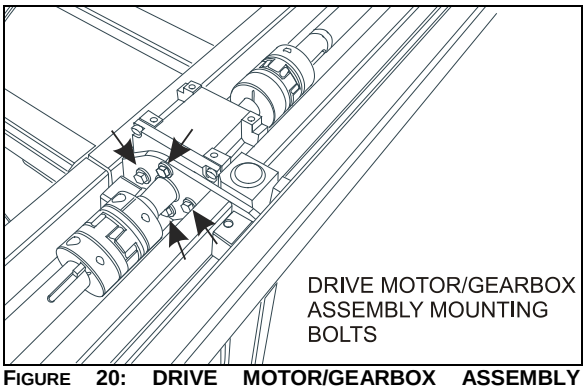

FIGURE 20: DRIVE MOTOR/GEARBOX ASSEMBLY MOUNTING BOLTS

9 JAW COUPLINGS

9.1 MAINTENANCE

Inspect the jaw couplings to check if there is backlash between the key and the keyway. Also, check the spider condition. Check that the clamping screws are tight.

9.2 REPLACEMENT & ADJUSTMENT

1. The slide-out must be retracted.
2. Disengage the jaw coupling: loosen the clamping screw on each clamping hub. If required, rotate the motor shaft extension as described in the manual override procedure (paragraph 18) to get to the clamping screws.
3. Separate both clamping hubs.

NOTE
It may be necessary to loosen the blue flange bearings to move the shaft out of the way.

4. Clean and degrease the hub bore and the shaft.
5. Push the new clamping hubs onto the shaft (pinion side).
6. Install a clamping hub on one of the gearbox shaft (opposite side of gearbox mounting bolts) flush with the shaft extremity (Figure 21) and tighten the clamping screw.

TORQUE: 16-20 lb-ft (22-27 Nm)

7. Install the second clamping hub on the gearbox shaft. Position the clamping hubs so that they are flush with the shafts extremity (Figure 21).

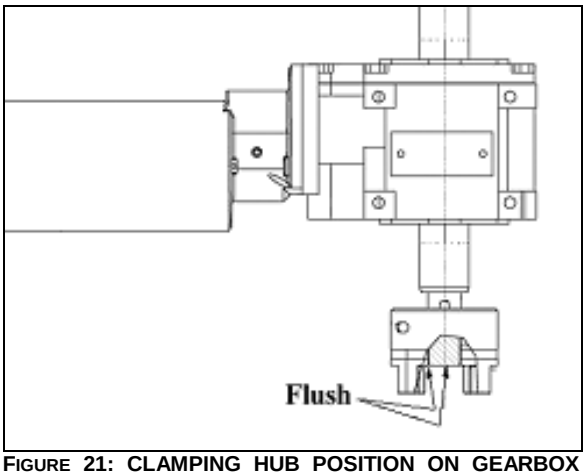

FIGURE 21: CLAMPING HUB POSITION ON GEARBOX SHAFT

8. Reconnect the clamping hubs with the spider. Leave a gap of 20mm (0.787inch) between each clamping hubs as shown on Figure 22. Use the motor hexagonal output shaft to align the keyways.
9. Tighten clamping screws.

TORQUE: 16-20 lb-ft (22-27 Nm)

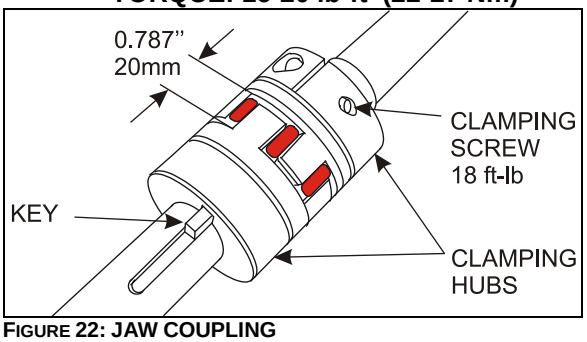

FIGURE 22: JAW COUPLING

10 FLANGE BEARING

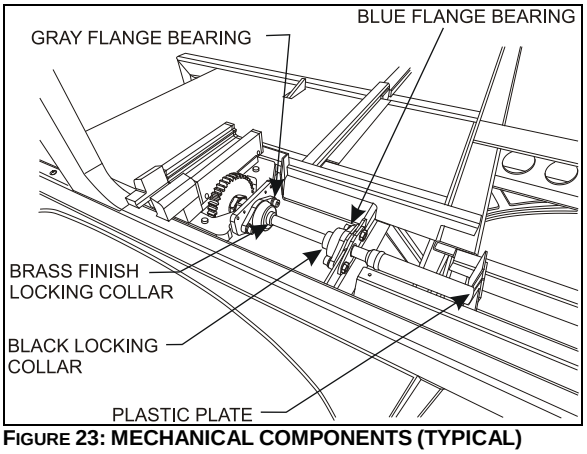

FIGURE 23: MECHANICAL COMPONENTS (TYPICAL)

There are two different types of flange bearing on the slide-out mechanism (Figure 23). Their

purpose is to maintain the shaft in position while permitting rotation. The gray flange bearings are fixed to the linear bearing support plate and are not adjustable. The blue flange bearings are fixed to a support with oblong holes allowing vertical adjustment to follow the linear bearing support plate position as it is being adjusted.

The flange bearings are pre-lubricated and no subsequent lubrication is required due to the very low extending and retracting speed of the slide-out system.

11 locking collar

The locking collar secures the shaft and the flange bearing together using friction. Once locked, it prevents axial translation and rotation of the shaft in the flange bearing bore.

11.1 INSTALLATION

Slide the locking collar along the shaft up to the flange bearing (Figure 15). Turn the locking collar clockwise while maintaining it pressed against the flange bearing. Knock the collar with a punch to lock it in place, there is a cavity on the collar made for that purpose. Tighten the set screw.

To remove, loosen the set screw and release the locking collar using groove joint pliers or a small pipe wrench.

12 LINEAR BEARING AND RAIL

Rail and linear bearing system provide precise frictionless linear movement together with high load carrying capacity and high stiffness. This standardized equipment is fully interchangeable.

To prevent corrosion, an electrolytic black film treatment is performed to the rail. Do not strike the rail with metal tools, this could damage the treatment.

After the rail is mounted to the slide-out base, a cap is used to cover the bolt hole to prevent foreign matters from clogging up the hole or from entering into the ball slide. The cap for the bolt hole is made of synthetic resin which has very high resistance to oil and wear.

12.1 BEARING MAINTENANCE

Make every effort not to allow dust and foreign objects to enter inside the linear bearing.

The linear bearings are pre-lubricated and no subsequent lubrication is required.

12.2 BEARING REPLACEMENT & ADJUSTMENT

1. Remove the slide-out from the vehicle (removal must be performed according to the Slide-Out Removal Procedure. Ask your Prevost service representative).
2. Disconnect the jaw coupling on the side of the linear bearing being replaced (refer to paragraph 9).
3. Dismount the blue flange bearing.
4. From the mechanism access panel, remove the retaining screws A, B, C & D (see Figure 26).
5. Remove the support and bearing assembly. Turn the assembly upside down to access the bearing mounting screws (Figure 24) Dismount the linear bearing and install the new one.

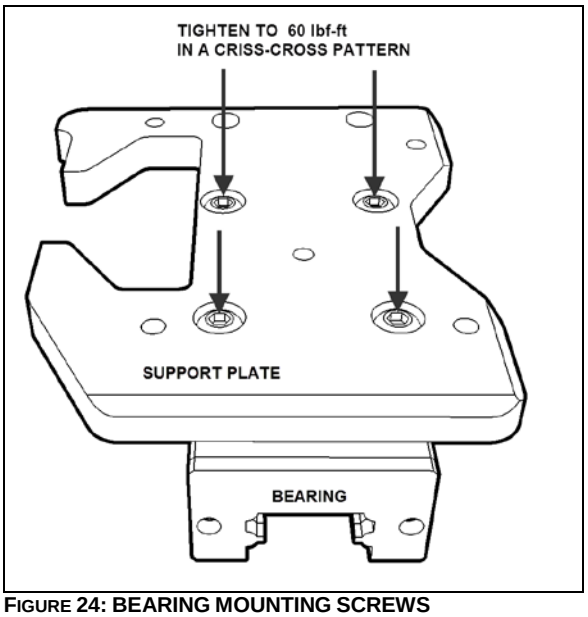

FIGURE 24: BEARING MOUNTING SCREWS

6. Tighten the mounting bolts in a crisscross pattern.

TORQUE: 59 lb-ft (80 Nm)

7. Reinstall the support plate, retaining screws, blue flange bearing and reengage the jaw coupling. Refer to the specific procedures.

12.3 LEVEL & TILT ADJUSTMENT

Leveling of the slide-out is done by changing the linear bearing support plate height using the leveling screws 1, 2, 3, 4 (Figure 26). When proper level is attained, the retaining screws A, B, C & D maintain the support plate seated on the leveling screws. Also, the retaining screws prevent the slide-out from tipping inside the vehicle when it is retracted.

The slide-out is slightly tilted. When retracting, the upper "in limit" stoppers touch first the vehicle structure, followed by the lower "in limit" stoppers. Tilt adjustment is done by changing the linear bearing support plate inclination using the leveling screws 1 & 2 as pivot and 3 to adjust the angle (Figure 26).

12.3.1 Procedure

NOTE

*For the **front slide-out**, the front linear bearing leveling screws are accessible from the access panel located over the front wheel while the rear linear bearing leveling screws are accessible from the access panel in the evaporator compartment. For the **rear slide-out**, access the linear bearing from under the bed structure or the radiator compartment.*

WARNING

The slide-out must be retracted when the level and tilt adjustment is performed.

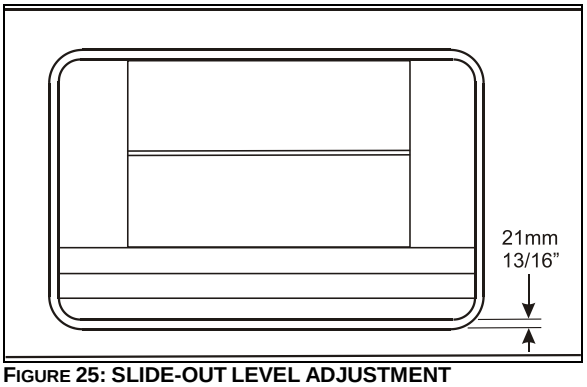

FIGURE 25: SLIDE-OUT LEVEL ADJUSTMENT

Before proceeding with the level and tilt adjustment, check the following conditions:

- The slide-out is retracted;
- The 2 lower “in limit” stoppers are perfectly adjusted, that means that the lower edge of the slide-out outer panel is flush or slightly in by 2mm (3/32”) with the vehicle body when retracted;
- The 2 upper “in limit” stoppers are removed from the slide-out (see paragraph 2.2).

1. Loosen the blue flange bearings mounting screws (Figure 15).
2. For front slide-out only, loosen the two plastic plates mounting screws along the shafts (Figure 15).
3. With the lower edge of the slide-out outer panel flush with the vehicle body, adjust the slide-out level. The distance between the top of the horizontal member under the slide-out and the slide-out under panel must be 21mm (13/16” approximately).

WARNING

Never unscrew completely retaining screw A, B, C, D or the slide-out may tip inside.

To raise the linear bearing support plate, turn leveling screw 1 & 2 clockwise. Slightly and gradually, loosen the retaining screws A & B as the support plate elevates, but keep the retaining screws tighten.

To lower the linear bearing support plate, turn screw 1 & 2 counterclockwise. As the support plate goes down, maintain the retaining screw A & B tighten.

4. Loosen retaining screws C & D. Unscrew leveling screw 4. Now, the support plate should be resting on leveling screw 1, 2 & 3.
5. Using leveling screw 3, adjust the tilt in order to have the top of the slide-out recessed by 5mm (7/32") (see Figure 27).
6. When proper tilt is attained, tighten leveling screw 4 so that it comes into contact with the support plate.
7. Loosen slightly leveling screw 3 and then tighten it so it is perfectly in contact with the support plate. Make sure screws 1, 2, 3 & 4 are in contact with the support plate.
8. Loosen retaining screw A & B.

9. Using a crisscross pattern, tighten progressively (3 rounds) the retaining screw A, B, C & D.

   TORQUE: 45-55 lb-ft (61-75 Nm)

10. Ensure that the leveling screw 1, 2, 3 & 4 are firmly leaning on the support plate and then firmly tighten the jam nuts.
11. Verify that the tilt is still properly adjusted (7/32").

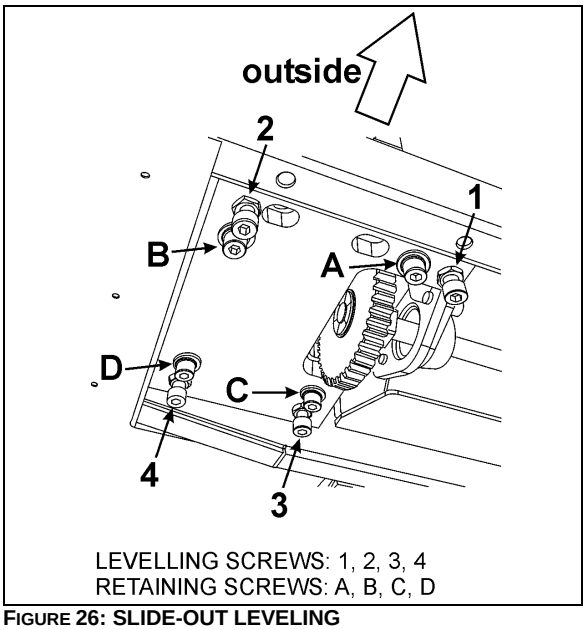

FIGURE 26: SLIDE-OUT LEVELING

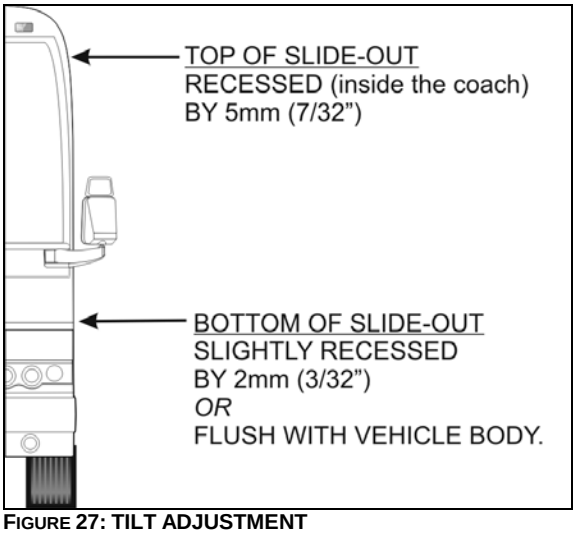

FIGURE 27: TILT ADJUSTMENT

12.4 RAIL MAINTENANCE

Check that all the caps for the bolt hole are present. Missing caps must be replaced. To insert a cap into the rail bolt hole, use a flat tool. Pound the cap gradually until its height becomes flush with the rail top face.

Clean accumulated dirt from the rails with a soft cloth.

12.5 RAIL REPLACEMENT

1. Remove the slide-out from the vehicle (removal must be performed according to the Slide-Out Removal Procedure. Ask your Prevost service representative).
2. Remove the bolt hole cap covers. To do so, pierce a hole in the center and hook them out. They will not be reusable.
3. Remove the rail mounting bolts.
4. Wipe off the rust preventive oil applied to the new rail. Remove burrs and small bumps on the slide-out mounting face with an oilstone.
5. Carefully place the rail on the bed on its mounting face.

NOTE
*The rail is bolted to a flat bar on which weldnuts are mounted. The flat bar is inserted in the slide-out lower body extrusion and can be removed through the end cap (*Figure 28*).*

6. Adjust the flat bar position to align the weldnuts with the rail mounting holes.
7. Temporarily tighten the bolts.
8. Adjust the rail position per Figure 28. For each rail, make sure the gap is the same on both sides of the rail. Use acetal blocks to inspect the gap.
9. For final tightening of the bolts, tighten on either end of the rail and then start to the other end. Use blue Loctite ™ on threads.

   TORQUE: 90-100 lb-ft (122-136 Nm)

10. Install the bolt caps.

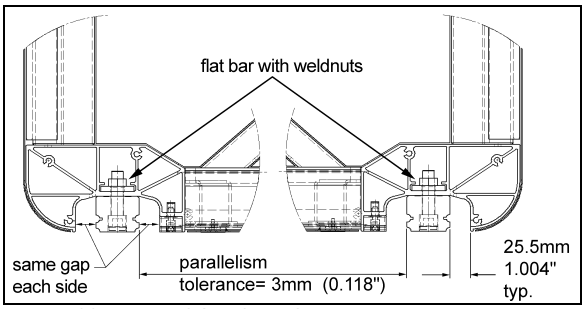

FIGURE 28: RAIL POSITIONING

13 acetal plastic blocks

Three different acetal plastic blocks are installed next to each linear bearing to prevent dirt and foreign matter from entering inside the vehicle. They also serve as a support surface for:

1. The inflatable seal each side of the rail.
2. The “in limit” stoppers.

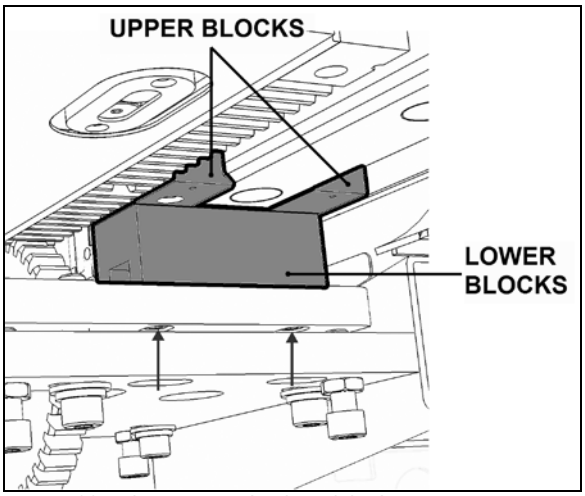

FIGURE 29: ACETAL PLASTIC BLOCKS

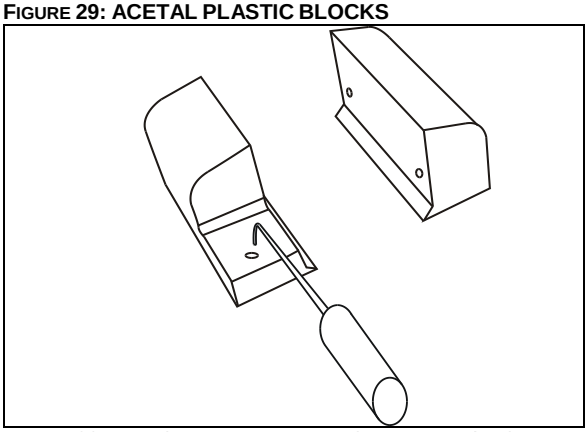

FIGURE 30: REMOVE THE UPPER ACETAL PLASTIC BLOCKS WITH A PICKING TOOL

13.1 REMOVAL / INSTALLATION

1. Gain access to the linear bearing support plate.
2. From under the support plate, remove the acetal plastic block mounting screws (see the oblong holes on Figure 26 and arrows, Figure 29).
3. Remove the 2 upper acetal plastic blocks. They have holes so they can be removed with a picking tool (Figure 30) from outside the vehicle. If the acetal plastic blocks are too hard to reach, slightly extend the slide-out, the movement of the slide-out should bring them out.
4. To remove the lower acetal plastic block, gain access to the compartment under it. Slide the acetal plastic block toward the center of the slide-out. Proceed the same way to reinstall it.
5. Reinstalling the upper acetal plastic blocks. Fold the wiper seal toward the outside with a flat tool to ease installation (Figure 31) and tighten the mounting screws. Leave no gap between the blocks and the rail.

TORQUE: 6.5-7.5 lb-ft (9-10 Nm)

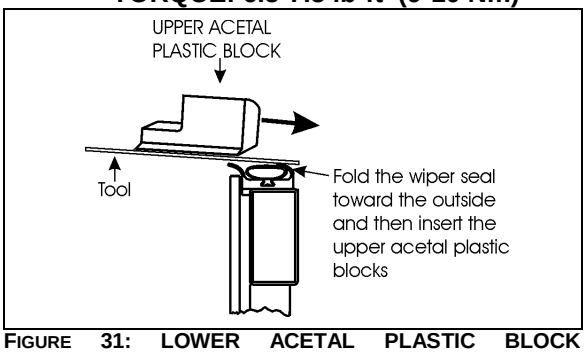

FIGURE 31: LOWER ACETAL PLASTIC BLOCK INSERTION

14 SLIDE-OUT PNEUMATIC SYSTEM

The slide-out is controlled by a pneumatic and electrical system. The pneumatic system consists of electrically controlled valves that operate slide-out components and control safety operations.

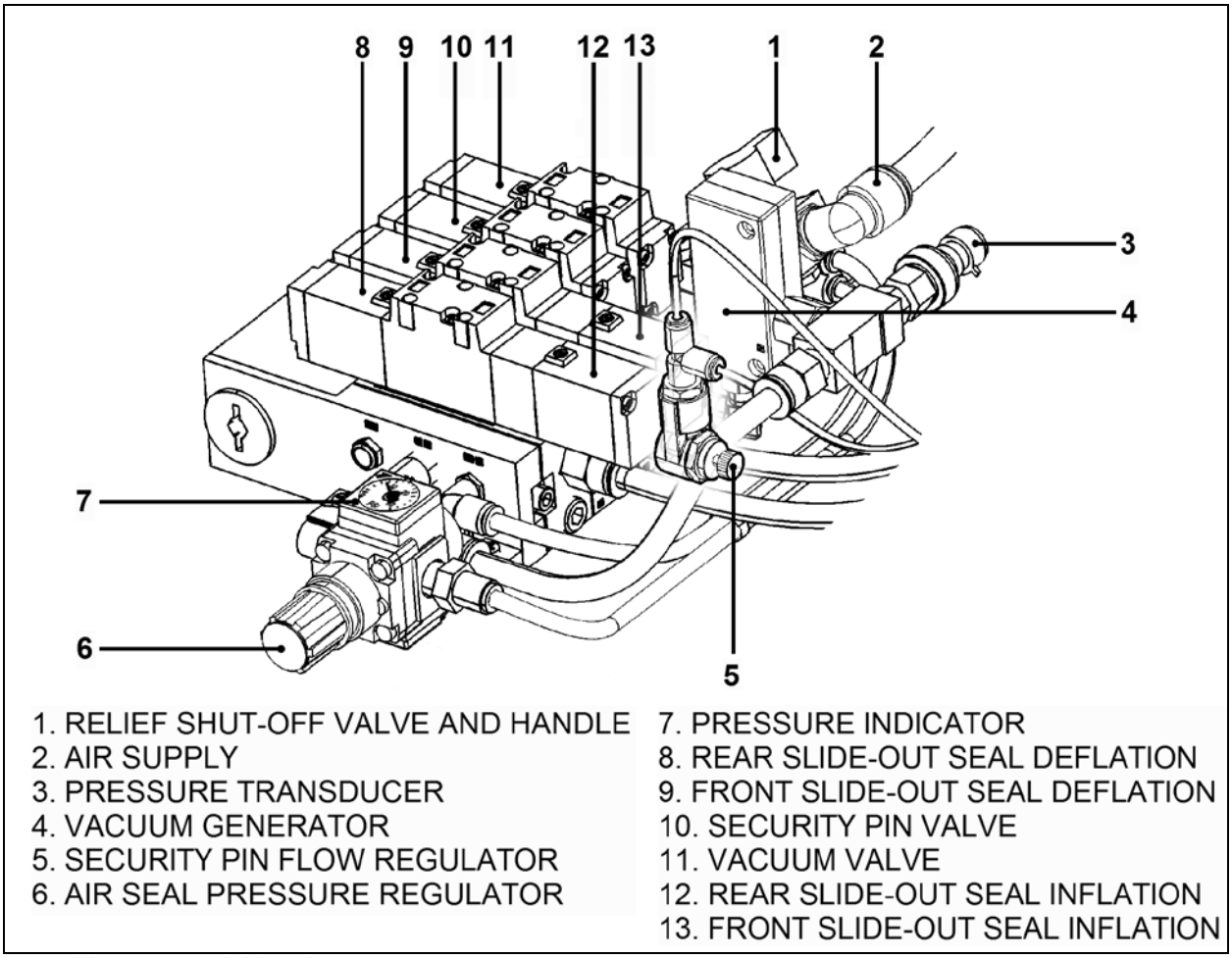

FIGURE 32: PNEUMATIC COMPONENT PANEL

14.1 DESCRIPTION

AIR PRESSURE INLET VALVE

The slide-out air supply comes from the accessory tank.

The supply line for the pneumatic component panel (Item 2, Figure 32) is connected to the air pressure inlet valve on the pneumatic panel in the front service compartment.

INFLATABLE SEAL VALVE

Seal inflation and deflation is done using a 5-port 2-position manifold valve with two solenoids. One solenoid is used for inflating of the seal and the other for deflating of the seal. When one of the solenoids is activated (seal deflating valve for example), the valve will keep its state even if the solenoid is deactivated. The inflating valve solenoid is activated to re-inflate the seal when the slide-out reaches its inner or outer limit. The inflatable seal pressure is set to between 10-12 psi. In full “IN” or full “OUT” position, this pressure is continuously applied to the seal as long as the accessory air tank (which supplies the slide-out) is not empty.

VACUUM GENERATOR

A vacuum generator using Venturi principle is controlled by a 5-port 2-position manifold valve and is used to evacuate the air faster from the

seal and to ensure that the seal surface does not stay in contact with the slide-out.

The vacuum generator valve is activated simultaneously with seal deflating valve solenoid for 10 seconds. A pressure transducer will detect a seal, vacuum valve or generator failure if -5 psig is not reached after the 10 seconds delay. In that situation, an error code will be stored in the DID. In normal operating condition, -5 psig is a necessary condition to consider the seal as deflated.

NOTE

When air pressure is relieved using the shut-off valve, the normal extending and retracting operation cycle is disabled. This is due to the pressure transducer reading 0 psig and that is higher than -5 psig (vacuum). For that reason the slide-out cannot be moved with the control pad.

14.2 MAINTENANCE

COMPRESSED AIR LINE

Inspect all compressed air line tubing for cuts, swelling, kinks or other damage or deterioration. Inspect the pneumatic fittings and components for any leak.

The slide-out air supply comes from the accessory air tank. For maintenance information, refer to Section 12, “Brake and air system”.

INFLATABLE SEAL CIRCUIT

The efficiency of the seal could be affected by impurities, such as white powder in the pneumatic control valve. It is recommended to inspect the inflatable seal control components once a year to prevent malfunction. In this case, remove the seal valves and clean the interior valve components using a compressed air nozzle. Do the same thing with the vacuum generators.

The inflatable seal pressure must be set between 10 to 12 psi maximum. It is recommended to check the inflatable seal pressure once a month to ensure sealing efficiency and prevent any infiltration from outside. The needle on the pressure gage should indicate between the two small green arrows on the dial (Figure 42).

14.3 SEAL

The slide-out sealing device is used to prevent any type of infiltration that may occur between the structure body and the slide-out itself. It is composed of an inflatable seal which is used as a primary sealing device for both retracted and extended slide-out position and a wiper seal as a secondary sealing device which is used to wipe water out and to ensure sealing during slide-out movement.

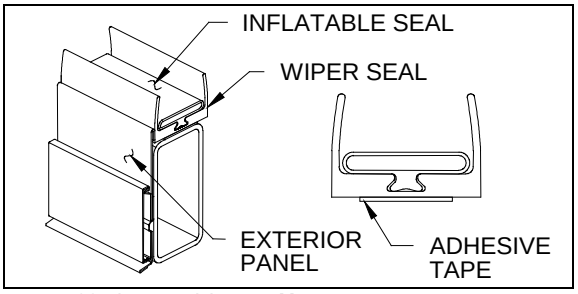

FIGURE 33: SEAL ASSEMBLY

Seal deflation is performed each time the slide-out is moved. The deflating valve solenoid is activated before and during slide-out movement. The deflating solenoid is deactivated upon reaching the retracted or extended position. Then the inflating solenoid is activated to re-inflate the seal.

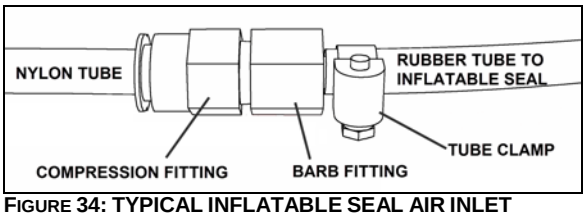

FIGURE 34: TYPICAL INFLATABLE SEAL AIR INLET

CAUTION

Make sure the inflatable seal is deflated when manually moving the slide-out during service maintenance. Deflate inflatable seals completely by turning the relief shut-off valve handle clockwise (see Figure 32, Item 1).

CAUTION

Check before using any cleaning or adhesive product on seal, panel or glass to prevent alteration or damage.

14.3.1 Maintenance

The inflatable seal pressure must be set between 10 and 12 psi with the pressure regulator. It is recommended to check the inflatable seal pressure once a month to ensure sealing efficiency and prevent any infiltration from outside. Check both seals for air leaks or cracks. Check the sealant between the inflatable seal and the exterior panels and glasses. Add sealant if necessary.

14.3.2 Seal assembly removal

DANGER

Always wear the appropriate safety equipment. Maintain adequate ventilation at all time.

1. Retract the slide-out 2" inside the vehicle (paragraph 14.3.4).

   Heed the cautionary notes before retracting.

2. Unplug the nylon tubing from the compression fitting (Figure 34).
3. Unstick and remove the wiper seal from the structure.
4. Scrape remaining tape from the structure. Remove old sealant that was between the wiper seal and the exterior panels and glasses.

14.3.3 Seal assembly installation

NOTE

This procedure is to install the inflatable seal assembly on the structure.

CAUTION

Always apply product in the same direction to prevent dirt from being brought back.

CAUTION

Check before using any cleaning or adhesive product on seal, panel or glass to prevent alteration or damage.

NOTE

Refer to the product specification for drying time.

1. Retract the slide-out 2" inside the vehicle (paragraph 14.3.4). *Heed the cautionary notes before retracting.*
2. Clean the part of the structure that will receive the inflatable seal and also the back of the exterior panel with a chix cloth and thinner. Use another cloth to dry the surfaces. Wait at least 2 minutes for drying.
3. Rub the structure and also the back of the exterior panel with a Scotch Brite (or equivalent product).
4. Clean another time the structure and the back of the exterior panel with a chix cloth and thinner. Use another cloth to dry the surfaces. Wait at least 2 minutes for drying.
5. Clean the structure and the back of the exterior panel with appropriate cleaner. Wait until the product is dry before proceeding.
6. Seal the gap between the exterior panels and the seal wiper.
7. Install the inflatable seal on the structure, placing it as close as possible from the exterior side of the structure. Position the air inlet first. Then remove locally the inflatable seal adhesive tape protection, and press the upper corners on the structure and hold them in place for 90 to 120 seconds. Install the lower corners next, then the straight section. Press the straight inflatable seal sections on the structure for at least 15 seconds. Use a small roller to ensure a good adhesive contact on the structure.
8. Connect the nylon tubing back on the fitting. (Figure 34).

14.3.4 Slide-out 2" inside retraction

CAUTION

For each rail, remove all acetal blocks and limit sensors. (Figure 35)

Refer to paragraph 13 “ACETAL PLASTIC BLOCKS”

Do not retract slide-out room too far in. Retract just past the wiper seal. (Figure 37)

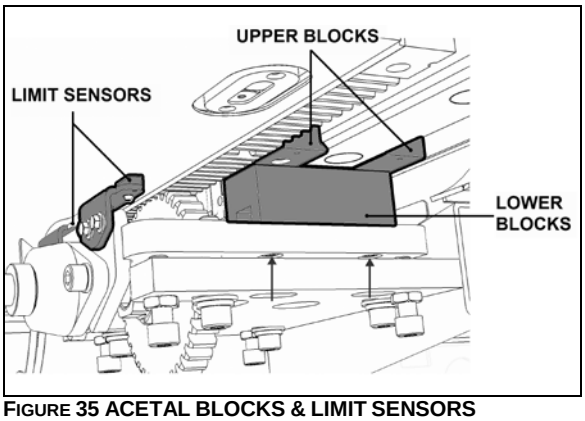

FIGURE 35 ACETAL BLOCKS & LIMIT SENSORS

CAUTION

Do not use the slide-out control pad to move the slide-out inwards. The limits are not recognized over the closed position. The slide-out will not stop and damage may occur.

1. Fully deflate the air seal by turning the shut-off valve clockwise (Item 1, Figure 32). Make sure the pressure indicator is at "0 psi".
2. Turn the ignition to the off position. Using the manual override procedure (Paragraph 18), extend the slide-out a few inches so the exterior extrusion screws located on the top of the slide-out are accessible from outside (Figure 9).
3. Using a knife, cut the sealant between the Top extrusion and the roof. (Figure 36) Unscrew and remove the central exterior extrusion screws and the two end extrusion screws.

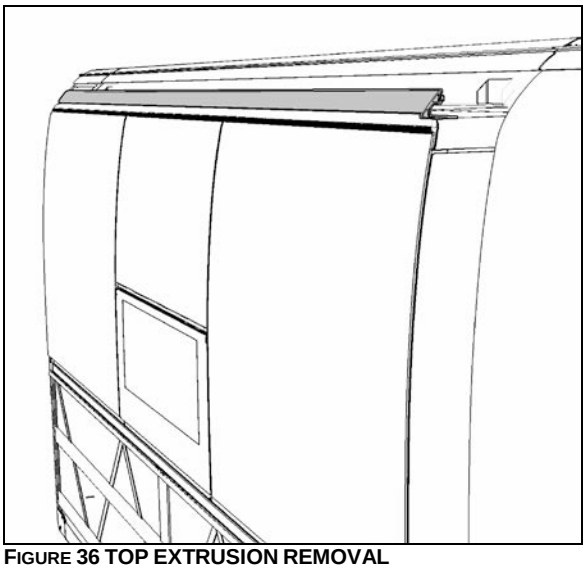

FIGURE 36 TOP EXTRUSION REMOVAL

4. Using the manual override procedure paragraph 18, move the slide-out 2" inside the vehicle, just so the seal becomes accessible from the outside (Figure 37).

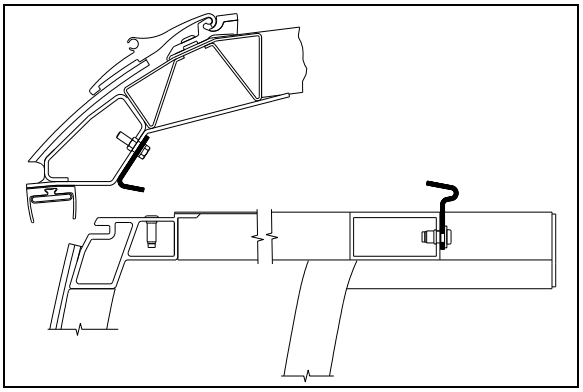

FIGURE 37: ROOM 2" INSIDE – UPPER SECTION VIEW

5. Once completed, use the manual override procedure to extend the slide-out to reinstall the exterior extrusion. Apply appropriate sealant on the exterior extrusion screws and between the extrusion, the roof and the edges to prevent water infiltration (Figure 37).
6. Using the manual override procedure, retract the slide-out to its closed position.
7. Finally, the seal can be re-inflated by turning the shut-off valve handle counterclockwise. Check the pressure gage on the inflatable seal regulator to see if the pressure is increasing to around 11 psi.

15 SLIDE-OUT ELECTRICAL SYSTEM

DANGER

Never modify the slide-out electrical wiring. Any modifications may cause an unexpected slide-out action and could result in personal injuries.

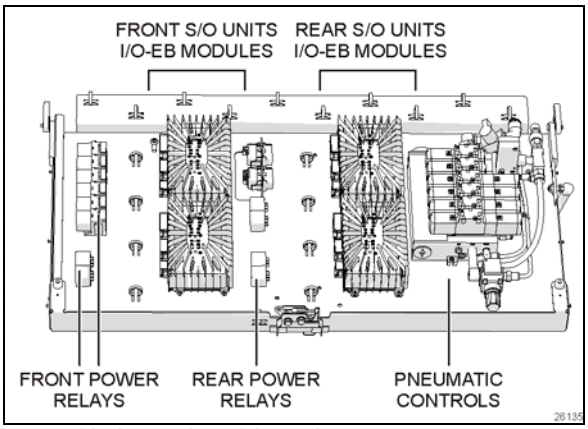

FIGURE 38: SLIDE-OUT CONTROL PANEL

The multiplexed slide-out electrical system is mainly composed of the MCM module, the VEC module and one I/O-EB module per installed slide-out.

For standard Prevost slide-outs, each I/O-EB module has two power relays assigned.

For Prevost slide-outs with flush floor, the I/O-EB module has six power relays assigned.

I/O-EB modules analyze the input signal conditions and activate outputs like pneumatic valves, retraction and extension sequence, etc. The power relays are used to supply power coming from the I/O-EB module to the electric motor and to change polarity to reverse motor rotation.

I/O-EB modules input signals are:

- Control pad switch IN;
- Control pad switch OUT;

Also, the following input signals are required for a safe operation of the slide-out:

- Pressure transducer;
- Parking brake;
- “in limit” sensor;
- “out limit” sensor;

I/O-EB modules output signals are:

- Control pad green indicator light;
- Power relay current reversing;
- Seal valve inflating solenoid;
- Seal valve deflating solenoid;
- Vacuum generator valve solenoid;
- Security pin valve solenoid;
- Electric motor, output 16 amps; one per motor

DANGER

Before working on the slide-out electrical system, turn the ignition key to the “OFF” position.

15.1 Electrical interconnection with Prevost vehicle

The slide-out power supply comes from the 24-volt circuit breaker in the rear electrical compartment. The other interconnections are located on the pneumatic panel and the electrical panel in the front service compartment. All the interconnections are shown on the electrical diagrams of your vehicle.

A blinking green light on the control pad means that an error condition or a missing operation condition is present on a slide-out.

15.2 Slide-out breakers / fuses

The main breakers for the slide-out electrical system are located in the rear electrical compartment.

For H3-45 VIP models: CB9

15.2.1 Multiplex fuses

The multiplex module outputs are protected in current by an internal “soft-fuse”. Each output is programmed to specific maximum amperage. When an output is shorted, the current gets above the limit and the soft-fuse intervenes to turn the output OFF. The output stays OFF until the "soft-fuse" is reset.

Turn the ignition key to the OFF position and turn to the ON position again. This resets all "soft-fuses".

CAUTION

Never put grease, Cortec VCI-238 or other product on the multiplex modules connector terminals.

15.3 PROBING VOLTAGE ON THE MULTIPLEX CIRCUITS

Multiplex modules are supplied by 24 volts.

Inactive Multiplex output = Residual voltage of 18% to 33% of supply voltage.
Inactive Multiplex input = Residual voltage of 50% of supply voltage.

NOTE

For a 24V module: an active voltage would be 24V or 0V but not in between. If you measure the intermediate tensions (ex. 12V, 4V, or 8V) this must be interpreted as if the input or the output is inactive.

15.4 Module replacement

I/O-EB modules can be replaced and reprogrammed without having to connect a computer to the vehicle.

Refer to Section 06 under heading “MULTIPLEX MODULES REPLACEMENT” for the detailed procedure.

15.5 SLIDE-OUT LIMIT SENSORS

Two Hall-Effect sensors are used on each slide-out to define end limit positions. The "in limit" and "out limit" sensors detect two pairs of permanent magnets fixed on the slide-out underbody.

15.5.1 Maintenance and adjustment

The rear slide-out sensors are accessible from inside of the vehicle, under the bed structure while the front slide-out sensors can be reached from the 3rd baggage compartment access panel. To remove the sensors, unsnap them from the mounting bracket.

To adjust the "in limit" sensors:
Prior to adjusting the “in limit” sensors, ensure that the “in limit” stoppers are perfectly adjusted (see paragraph 2.2.2).

1. Retract the slide-out to its full “IN” position with the “in limit” stoppers in contact with their bearing surface.
2. Loosen the “in limit” sensor mounting bracket screws and move back the sensor completely (toward the inside of the vehicle).
3. Bring slowly the sensor toward the outside of the vehicle until the LED turns on. When it does, move it 0.079” (2mm) further in the same direction and tighten the mounting bracket screws.
4. Check if the “in limit” sensor is properly adjusted. At the moment when the slide-out stops during normal retraction, the “in limit” stoppers must contact their bearing surface (lower acetal plastic block). Put white grease on the “in limit” stopper beforehand to visually confirm the system stops the motion before hitting the blocks. There should be a grease mark on the block.

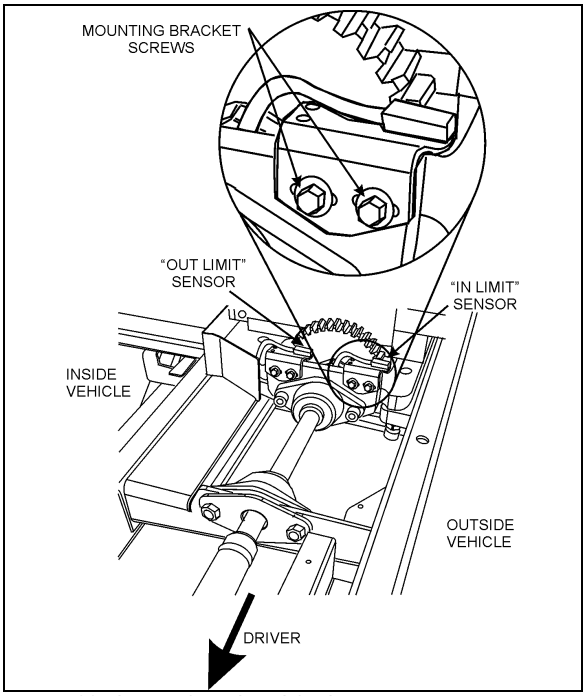

FIGURE 39: SLIDE-OUT SENSORS

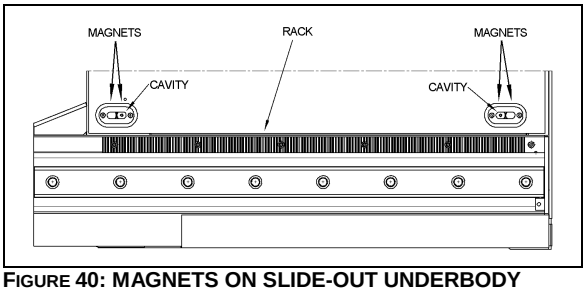

FIGURE 40: MAGNETS ON SLIDE-OUT UNDERBODY

To adjust the "out limit" sensors:

Prior to adjusting the “out limit” sensors, ensure that the inner stoppers are perfectly adjusted (see paragraph 2.1).

1. The slide-out is slightly tilted except when it is in its full “IN” or “OUT” position. Extend the slide-out near its full “OUT” position. When the slide-out straitens up and that it is perpendicular with the vehicle body, stop the slide-out.
2. Loosen the “out limit” sensor mounting bracket screws and move back the sensor completely (toward the inside of the vehicle).
3. Bring slowly the sensor toward the outside of the vehicle until the light emitting diode (LED) turns on. When it does, tighten the mounting bracket screws.

NOTE

When the “out limit” sensors are properly adjusted, the slide-out extension stops before the side inner stoppers reach the vehicle structure.

16 SLIDE-OUT EXTERIOR FINISHING PANELS & WINDOWS

NOTE

The removal and installation procedures are all based on standard service methods described in section 18: BODY. Refer to this manual for procedures, tools, cleaner, adhesives and other product needed.

17 WELDING PRECAUTION

CAUTION

Prior to arc welding on the vehicle, refer to the Welding Precautions Procedure Prior To Welding" in section 00 GENERAL of this manual to avoid serious damage to the vehicle components.

18 SLIDE-OUT MANUAL OVERRIDE PROCEDURES

CAUTION

Never use an impact wrench to manually operate the slide-out. Doing so would damage the various mechanical components of the slide-out.

In case of power retracting system failure, it is possible to use the manual override procedure to retract or extend the slide-out.

The manual override procedures consist in rotating the slide-out motor shaft extension using a cordless power drill with a 10 mm hexagonal socket.

Follow all instructions carefully to avoid damaging the inflatable seal or the retraction mechanism.

18.1 Preliminary conditions for manual override procedure

Before using the slide-out manual override procedures, make sure that the problem cannot be solved by one of the following simple checks:

- Make sure the circuit breaker is not tripped. See paragraph 15.2.
- Make sure the parking brake is applied and that transmission is in the "NEUTRAL" position.

NOTE

The slide-out control system inhibits transmission range selection to prevent the vehicle from moving if the slide-out is not in its full "IN" position.

- Make sure the voltage is high enough by running the engine at fast idle or having a battery charger connected.

CAUTION

Before extending or retracting the slide-out, always open a window to avoid movement restriction and to prevent the motor from stopping in overcurrent because of a vacuum or pressure build up inside the vehicle.

18.1.1 Manual retracting procedure – Front and rear slide-out

1. Turn the ignition switch to the "OFF" position, and remove the ignition key for more safety.
2. Deflate the inflatable seal by using the relieving shut-off valve located on the pneumatic component panel (Item 1, Figure 32).
3. Turn the handle clockwise to deflate the seal. Make sure the pressure indicator reading is "0 psi".

CAUTION

The pressure in the inflatable seal must be completely relieved to prevent any damage to the seal.

NOTE

When air pressure is relieved using the shut-off valve, the normal extending and retracting operation cycle is disabled, for that reason the slide-out cannot be moved using the control pad.

4. To move the slide-out, use a cordless power drill with a 10 mm hexagonal socket. on the shaft extension of the slide-out motor.
5. Rotate the slide-out motor shaft extension with the power drill until the slide-out comes to its closed position. (Figure 41)

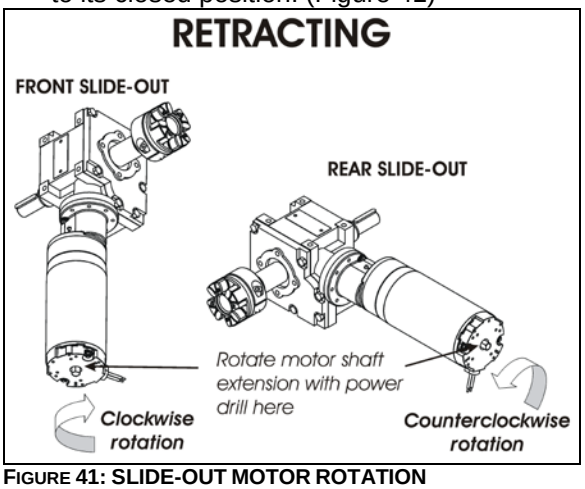

FIGURE 41: SLIDE-OUT MOTOR ROTATION

6. Once the slide-out room is lined up to its closed position, remove the tool from the motor.

CAUTION

Slow down the closing speed as the slide-out approaches its closed position. As soon as the “in limit” stoppers come in contact with their bearing surface, stop immediately the power drill rotating movement. Not doing so could overload the drive mechanism and cause damage to the reduction gearbox.

4. Finally, the inflatable seal can be re-inflated by turning the shut-off valve handle counterclockwise. Check the pressure gage on the inflatable seal regulator to see if the pressure increases to around 11 psi (Figure 42). Needle should be pointing between the two small green marks on the dial.

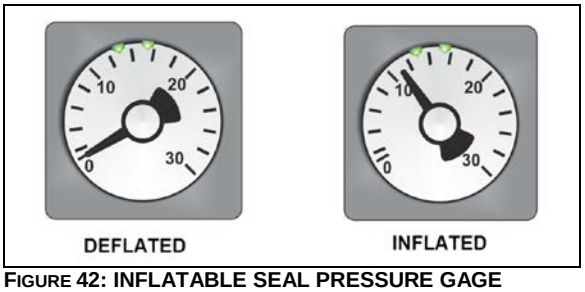

FIGURE 42: INFLATABLE SEAL PRESSURE GAGE

18.1.2 Manual extending procedure – Front and rear slide-out

1. Apply parking brake to disengage the security pin from the receptacle.
2. Turn the ignition switch to the "OFF" position, and remove the ignition key for more safety.
3. Deflate the inflatable seal by using the relieving shut-off valve located on the pneumatic component panel (Figure 32, Item 1). Turn the handle clockwise to deflate the seal. Make sure the pressure indicator reading is "0 psi".

CAUTION

The pressure in the inflatable seal must be completely relieved to prevent any damage to the seal.

NOTE

When air pressure is relieved using the shut-off valve, the normal extending and retracting operation cycle is disabled, for that reason the slide-out cannot be moved with the control pad.

4. To move the slide-out, use a cordless power drill with a 10 mm hexagonal socket on the shaft extension of the slide-out motor.
5. Rotate the slide-out motor shaft extension with the power drill until the slide-out comes to its opened position.
6. Once the slide-out is lined up to its opened position, remove the tool from the motor.

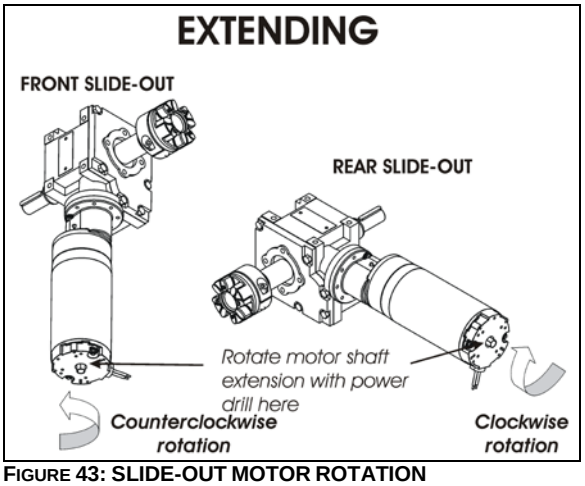

FIGURE 43: SLIDE-OUT MOTOR ROTATION

NOTE

*The **front slide-out motor** is located inside the 2nd baggage compartment while the **rear slide-out motor** is accessible from inside the vehicle, under the bed structure.*

CAUTION

Slow down on the closing speed as the slide-out approaches its extended position. As soon as the "out limit" stoppers come in contact with their bearing surface, stop immediately the power drill rotating movement. Not doing so could overload the drive mechanism and cause damage to the reduction gearbox.

7. Finally, the inflatable seal can be re-inflated by turning the shut-off valve handle counterclockwise. Check the pressure gage on the inflatable seal regulator to see if the pressure is increasing to 11 psi (Figure 42).

19 SLIDE-OUT MAXIMUM LOAD

Front slide-out:
Maximum load with vehicle at stand still (retracted or extended) ……...1500 lb

Maximum load with vehicle moving or slide-out moving ……..……...1200 lb[1]

Rear slide-out:
Maximum load with vehicle at stand still (retracted or extended) ……..1500 lb

Maximum load with vehicle moving or slide-out moving ……..……1000 lb[1]

NOTE

Maximum load includes occupant weight and equipment added by the converters in the slide-out

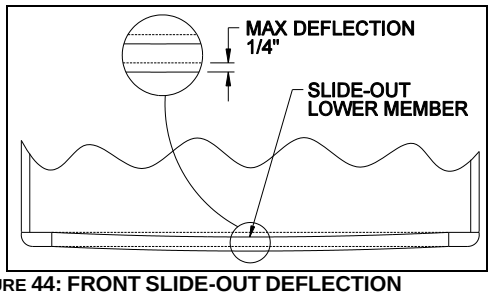

FIGURE 44: FRONT SLIDE-OUT DEFLECTION

[1] Value is for an equally distributed load to prevent seal damage by excessive deflection.

CAUTION

Never remove the structural reinforcement angle brackets inside the baggage compartments. Doing so could lead to termination of the warranty coverage concerning the structural integrity.

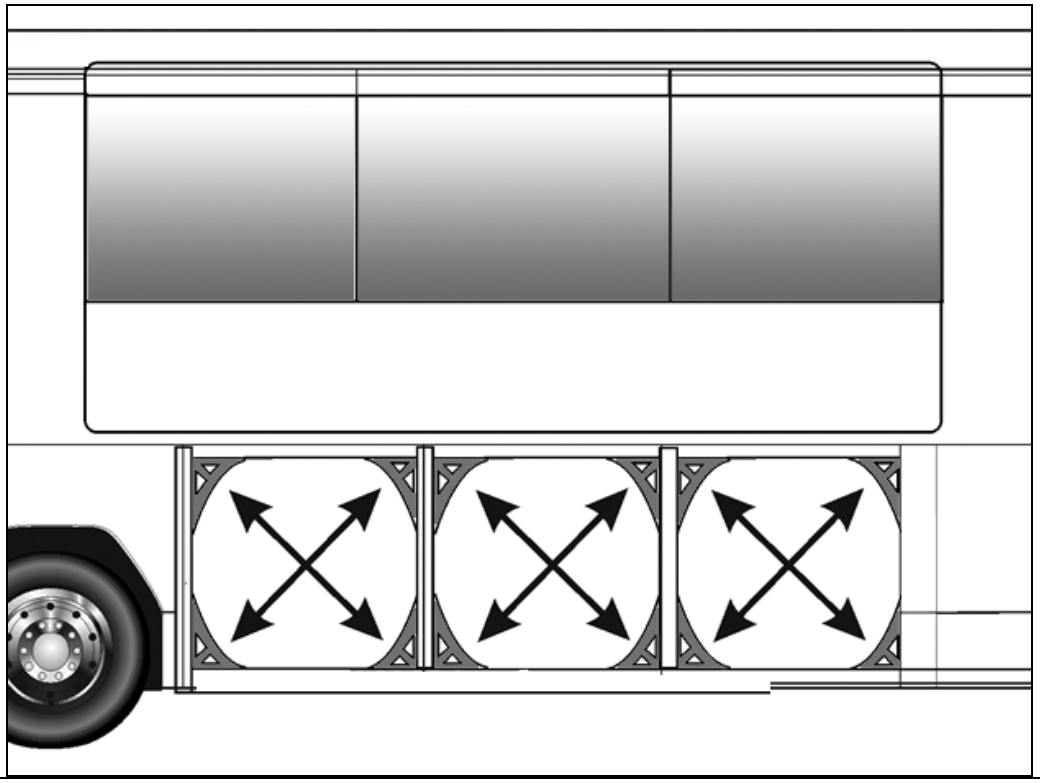

20 PREVOST SLIDE-OUT WITH FLUSH FLOOR (H3-45 VIP)

A flush floor slide-out is available in the front right position on H3-45 VIP vehicles. The double rail compact slide mechanism provides improved aisle width when retracted. It features a mobile floor providing a continuous, flush floor surface when extended. There are no security pins required in this slide-out configuration.

Synchronization of the two extension motors is realized through the MUX program as opposed to mechanically in standard Prevost slide-outs. The associated MUX program uses PID (Proportional, Integral, Derivative.) control to achieve precise and fail-safe operation of the slide-out.

CAUTION

Manual operation of the Prevost slide-out with flush floor differs significantly from standard Prevost slide-outs and should not be attempted unless you are familiar with the procedure.

20.1 MECHANISM OVERVIEW (H3-45 VIP)

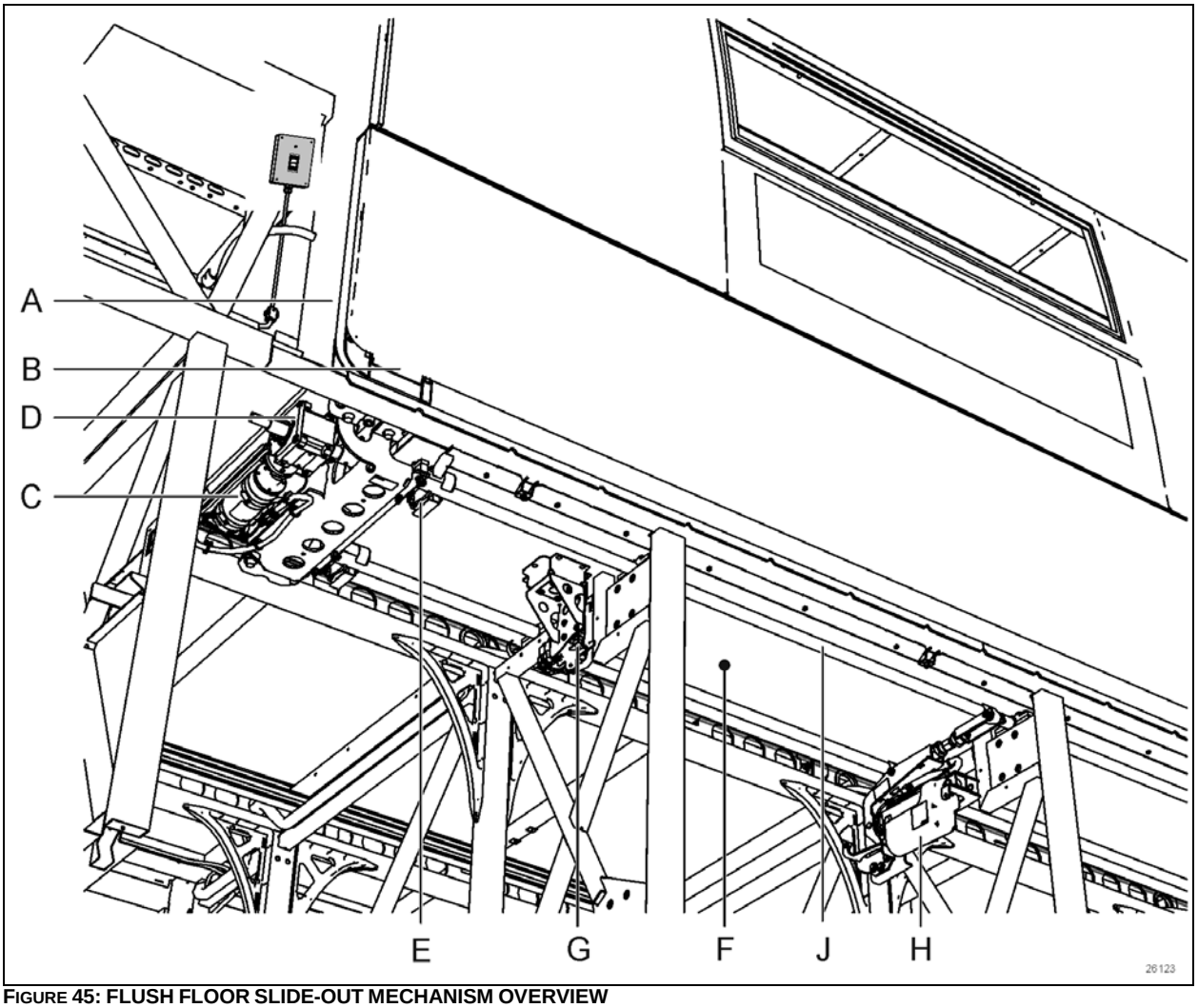

FIGURE 45: FLUSH FLOOR SLIDE-OUT MECHANISM OVERVIEW

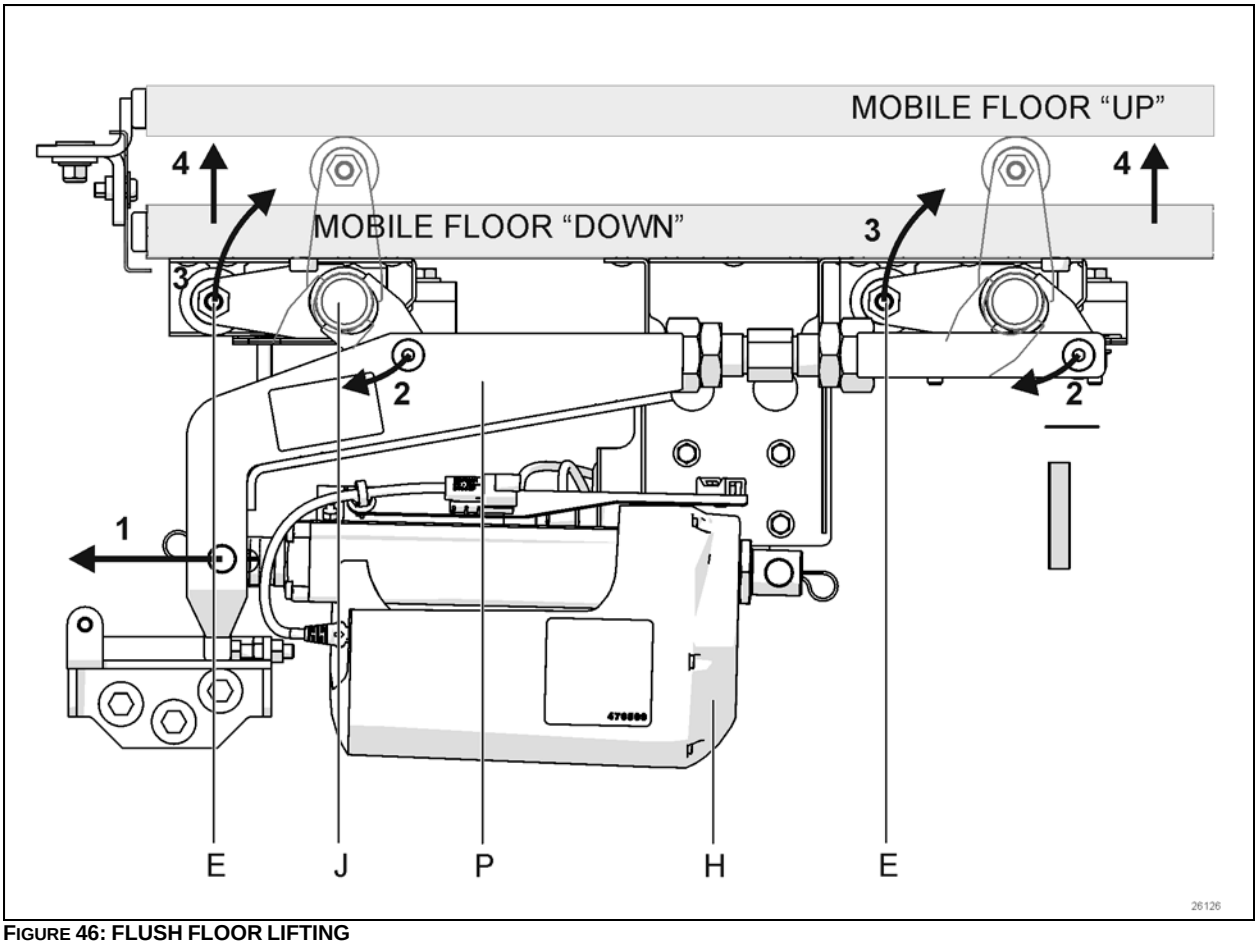

FIGURE 46: FLUSH FLOOR LIFTING

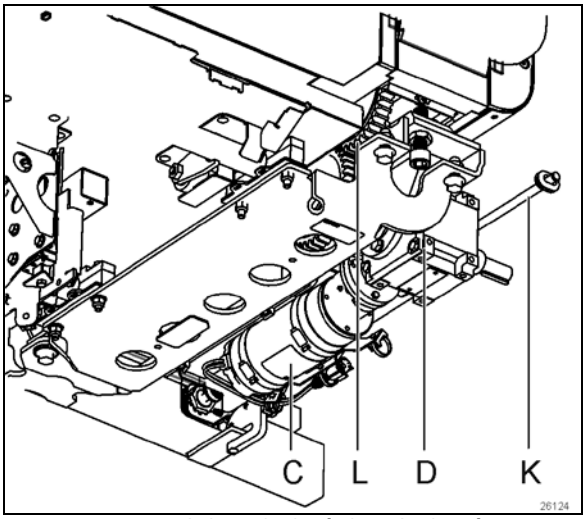

FIGURE 47: EXTENSION MOTOR (FORE SHOWN)

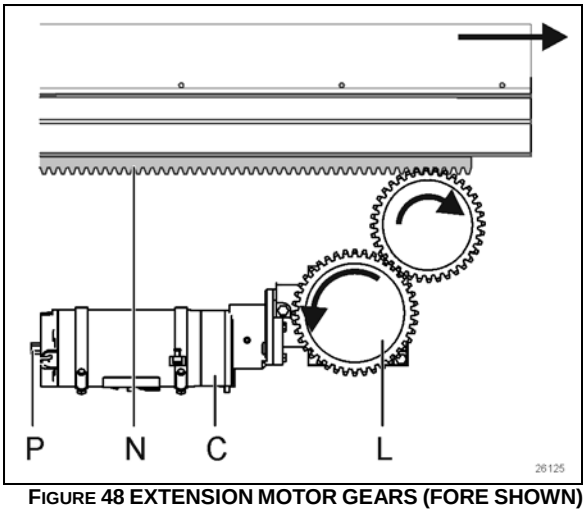

FIGURE 48 EXTENSION MOTOR GEARS (FORE SHOWN)

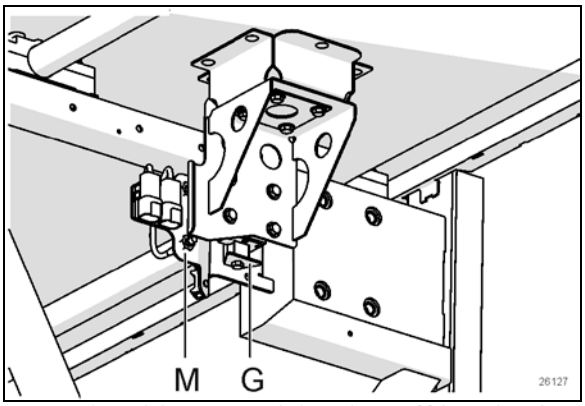

FIGURE 49: FLOOR BEARING & PROXIMITY SWITCHES

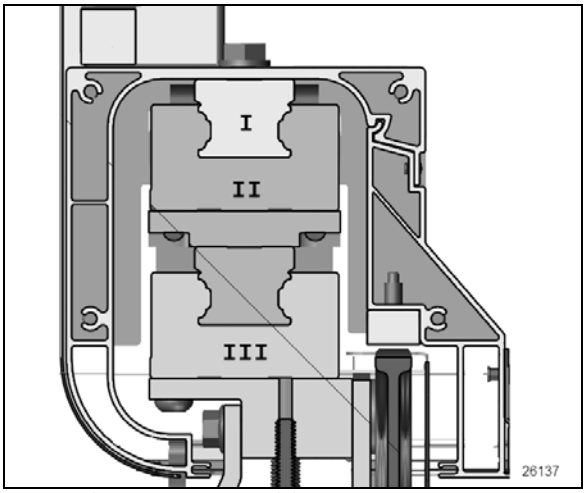

FIGURE 50 LINEAR BEARINGS

Refer to images Figure 45 to Figure 50 above for the following descriptions.

The slide-out room is moved in and out on a pair of stacked linear bearings (Figure 50, Items I and III). Power comes from two synchronized electrical motor (**C**) oriented horizontally under each linear bearing assembly. The motor drives a right angle speed reducing gearbox (**D**).

The electric motor and gearbox used are the same 24V, 1/3 HP motors with speed reduction gearbox as the standard Prevost slide-outs.

As the room reaches its fully extended position, the mobile floor (**F**) is lifted in position on a pair of vertical linear bearings (**G**). Once the mobile floor is in place, the room retracts slightly to secure and fit the floor in position.

Water tightness of the slide-out is ensured by a wiper seal and an inflatable seal (**A**).

Extension bearings and rail assemblies are stacked in pairs (Figure 50). The slide-out room structure is attached to the top rail (**I**). The top bearing is attached to the bottom rail (**II**). The bottom bearing is attached to the vehicle structure (**III**).

Each motor (**C**) is coupled to pinion gears (**L**) connected to a rack gear (**N**) linked to the slide-out room structure to provide extension and retraction motion. Manual extension or retraction is possible by driving both motor shafts (**H**) simultaneously but with extra care as room extension is not synchronized left and right in the case of a double motor failure.. Closely follow instructions provided further in this manual to perform this procedure.

On the floor lifting mechanism, the electric linear actuator (**H**) is attached to a transfer arm (**P**) linked to two floor lift shafts (**J**) having eccentric rollers (**E**).

When the linear actuator extends (Figure 46, **1**), the transfer arm rotates the floor lift shaft links inward (**2**), rotating at the same time the eccentric rollers upward (**3**), effectively lifting the mobile floor (**4**) The vertical movement of the floor is guided by a pair of vertical linear bearings (**G**).

Note: If the mobile floor fails to reach its final position, manual operation is possible. Closely follow instructions provided further in this manual to perform this procedure.

Structural integrity of the vehicle platform is ensured with stainless steel casting corner reinforcements in the luggage bays.

20.1.1 Control system overview

Extension and retraction of the slide-out room is performed using the Control Pad (**N**). Final location of the control pad may vary from one vehicle to another depending on interior layout and vehicle converter.

Logic control and operation is achieved by using Volvo multiplex modules. Troubleshooting is performed through the DID.

The flip-down control panel is typically located in the first road side luggage bay, attached to the ceiling.

The position of the room is provided by two absolute position sensors (**K**), one on each side of the room. On the mobile floor system, four proximity switches (**M**), (two aft, two fore) are used to provide the system with "upper" and "lower" floor positions.

Current draw of the linear actuator and extension motors is continuously monitored and several conditions are managed proactively by the MUX program to ensure improved reliability of the slide-out system. Refer to "Troubleshooting" for details. End of travel physical stoppers will increase the current draw when they are hit and provide the ultimate end of course signal for the program.

NOTE
During room extension, if one side "binds", this condition will be detected by the PID control algorithm in the program. The faster motor may stop to wait for the slower overloaded motor to limit side to side offset. This could be noticeable by slower or irregular room movement.

20.2 INNER STOPPERS

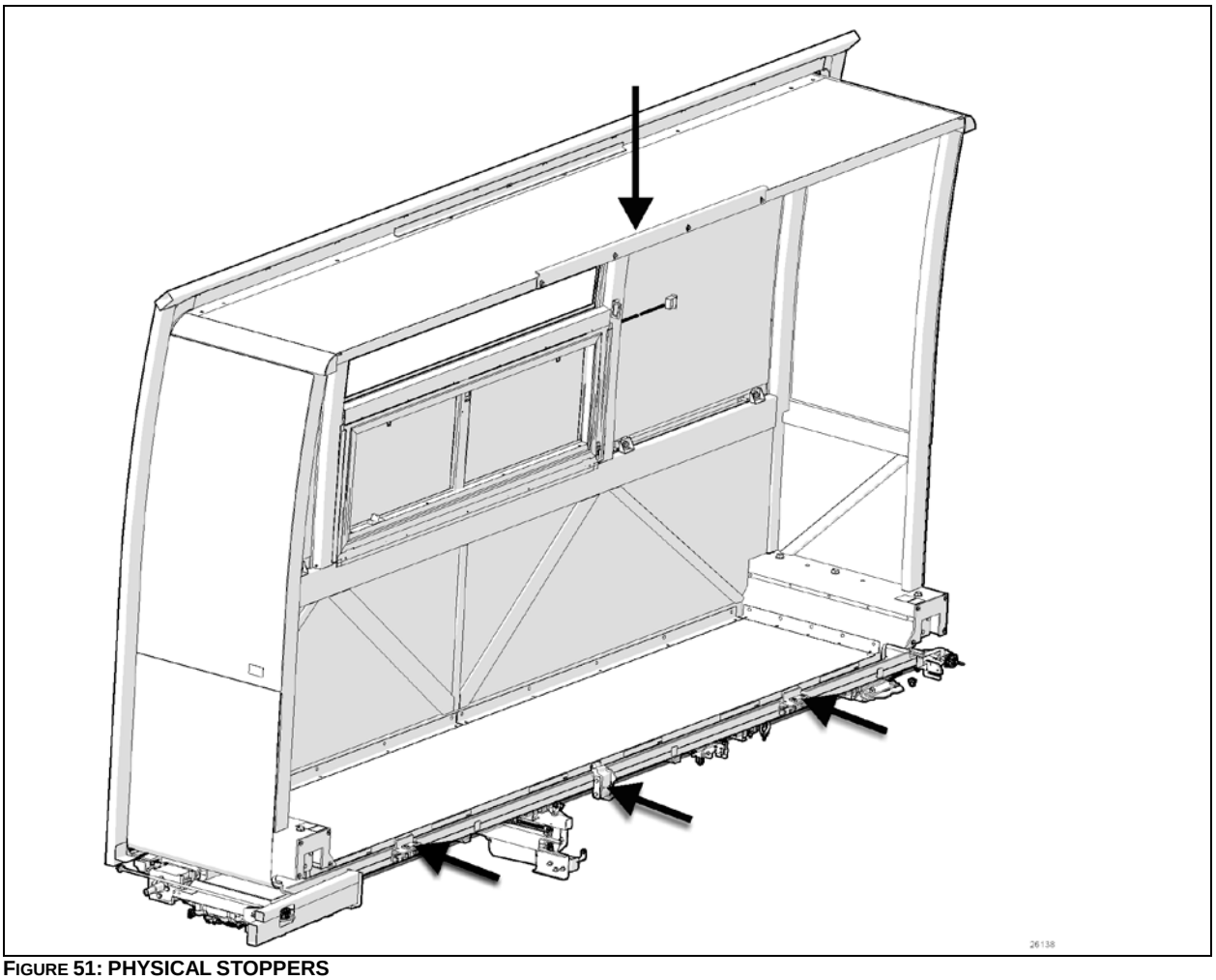

FIGURE 51: PHYSICAL STOPPERS

The front right slide-out is equipped with four inner stoppers. One is located on the top horizontal member of the slide-out, and three stoppers for the slide-out floor (Figure 51).

20.2.1 Maintenance

Check that the stopper screws are tight and that no deformation can be visible.

20.2.2 Adjustment

Adjust the upper structure key and the upper inner stoppers according to figure below with the seal deflated. When inflating, the seal presses the roof structure upward and at that moment, the upper inner stopper comes into contact with the upper structure key

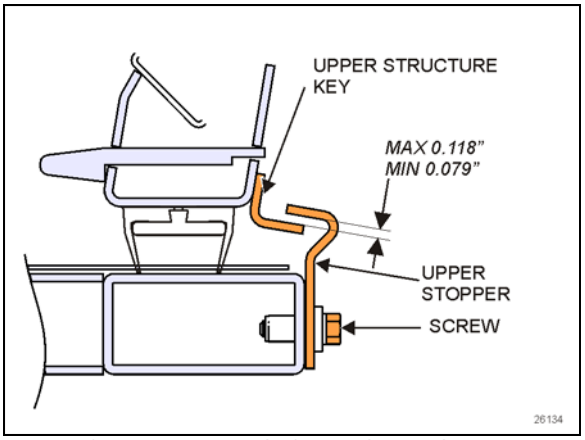

FIGURE 52: UPPER INNER STOPPERS ADJUSTMENT

20.3 TILT AND LEVELING

Tilt and leveling adjustment is carried-out by the adjustment plate and screws located under each linear bearing assembly. Aft adjustment screws are accessible by the luggage bay.

Screws "A" adjust level and tilt. Screws "B" are used to lock the adjustment.

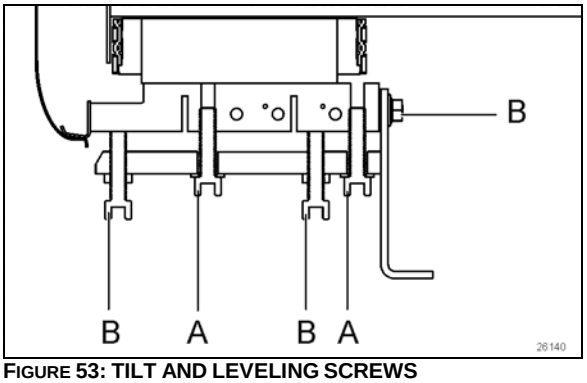

FIGURE 53: TILT AND LEVELING SCREWS

Adjustment screws on the fore rail assembly can be reached by an access hatch in the vehicle's side wall (Figure 54). Remove the front curbside fender to access the hatch.

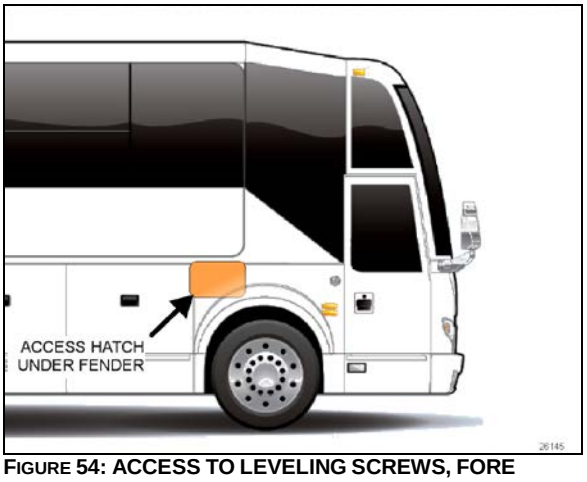

FIGURE 54: ACCESS TO LEVELING SCREWS, FORE

20.4 ROOM EXTENSION FOR MAINTENANCE

It is possible to extend the room ten inches (10in.) further out for maintenance operations, like inflatable seal replacement.

CAUTION

Prepare a scissor lift or a set of jack stands to support the slide-out room while it is extended for maintenance.

From the inside of the vehicle, remove any capping or trims hiding linear bearings at the bottom of the slide-out on both sides.

Then remove the room extrusion end caps. (Figure 55)

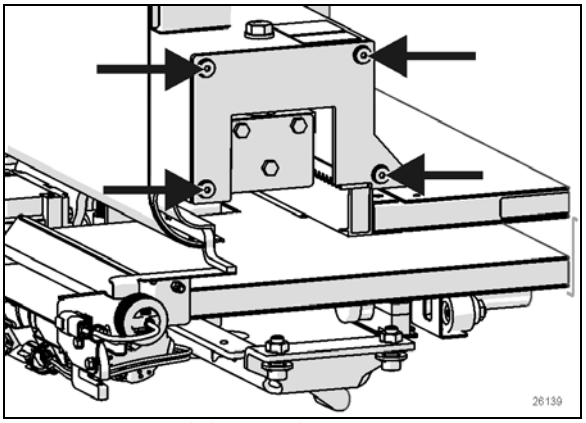

FIGURE 55: EXTRUSION END CAP

Once the room is fully extended, remove the screw holding the flexible plastic rail cover in place. You will notice a notch in the plastic cover's inner end, indicating the screw position. (Figure 56) *Perform this on both sides*.

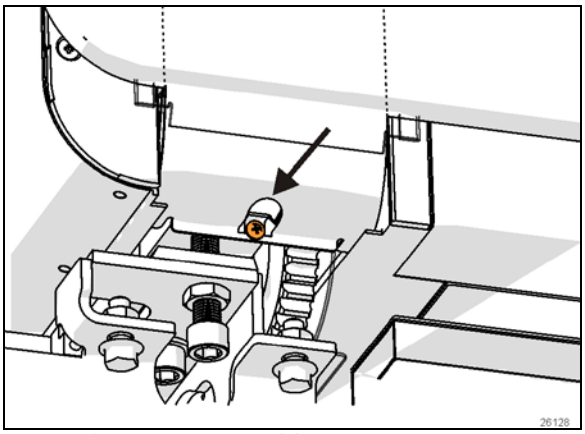

FIGURE 56: FLEXIBLE RAIL COVER

From the baggage compartment, remove the screw holding the fork connected to the position ring of the sensor. *Perform this on both sides*. (Figure 57) Pull the sensor ring assemblies back inboard.

CAUTION

Be sure to release both position sensors or they may be damaged on room extension.

Remove the upper inner stopper (Figure 51).

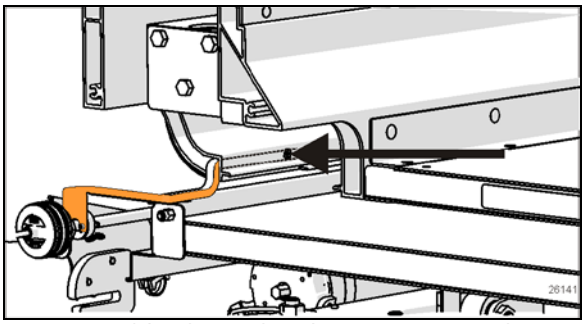

FIGURE 57: POSITION RING PUSH-PULL TAB REMOVAL.

Remove the two nuts holding the extension stopper (perform both sides). (Figure 58)

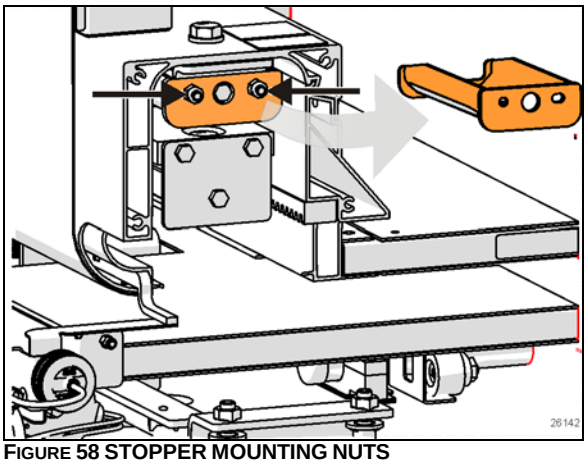

FIGURE 58 STOPPER MOUNTING NUTS

The room can now be extended further.

Do not remove any additional stoppers. Heed the safety warning below.

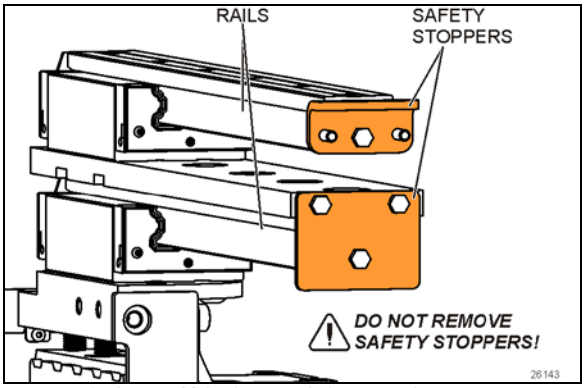

FIGURE 59: SAFETY STOPPERS ON RAILS

DANGER

Safety stoppers are bolted to the rail ends. (Figure 59)

Never remove these stoppers.

These prevent the room from sliding out of the bearings.

Without these stoppers, the room could slide completely out of the bearings, therefore posing a risk of death and significant damage to the vehicle's components

Deflate the seal by using the relieving shut-off valve located on the pneumatic component panel. Confirm by the pressure gage.

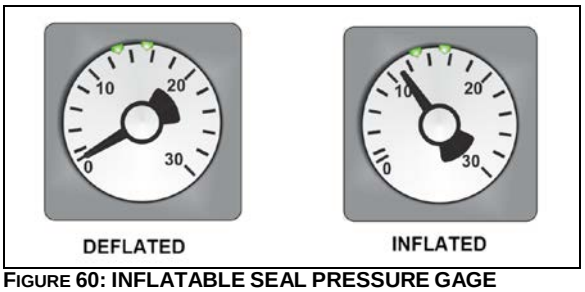

FIGURE 60: INFLATABLE SEAL PRESSURE GAGE

CAUTION

Failure to deflate the seal may result in seal damage. Refer to Paragraph 14.3 "SEAL" for further details

Using two cordless drills with 10 mm hexagonal socket and drive both extension motors *simultaneously* to further extend the slide-out room until the gears leave the rack gear.

CAUTION

Extra care should be taken to ensure the room extends evenly on each side. Stay within one inch (1") side to side to avoid stressing the components.

Finish by pushing out the room by hand.

20.5 SLIDE-OUT REMOVAL

Removal must be performed according to the Slide-Out Removal Procedure. Ask your Prevost service representative.

20.6 SLIDE-OUT INSTALLATION

Installation must be performed according to the Slide-Out Installation Procedure. Ask your Prevost service representative.

20.7 LINEAR SENSOR ADJUSTMENT

The linear sensors are factory adjusted to give the same absolute position signal. They should not be tampered with. If they become out of adjustment, contact your Prevost service representative.

20.8 MANUAL EXTENSION OF THE SLIDE-OUT

Manual extension or retraction of the slide-out is possible by driving the extension motors simultaneously by the shaft extension "**P**", **(**Figure 48 EXTENSION MOTOR GEARS (FORE SHOWN).

To move the slide-out, use a cordless power drill with a 10 mm hexagonal socket on the shaft extension of the slide-out motor. Refer to decal near motor to know if rotation is CW or CCW. Make sure seal is deflated.

Make sure the mobile floor is fully down on room retraction or extension.

CAUTION

Extra care should be taken to ensure the room extends evenly on each side. Stay within an inch (1") side to side to avoid stressing the components.

WARNING

Keep hands and feet away from slide-out moving parts. Make sure there are no objects or persons around the slide-out.

The fore motor can be reached by the access panel located on the riser portion of the step behind the navigator's seat.

20.8.1 Manual extension on failure of only one motor

Two persons are required for this procedure.

If only one of the two motors is defective, unplug the defective motor and drive it with a cordless power drill while having a second person depress the control pad button.

The slide-out MUX program will synchronize the remaining motor to follow the hand driven side.

WARNING

Keep hands and feet away from slide-out moving parts. Make sure there are no objects or persons around the slide-out.

20.9 MOBILE FLOOR HAND CRANK PROCEDURE

The *floor lifting* mechanism of the slide-out can be manually operated in the event of a power failure. You will need a 6mm (1/4") Allen key to operate the actuator (Figure 61).

CAUTION

Do not use an electric drill or other similar tool to operate mobile floor linear actuator. Permanent damage to the unit may result.

As a safety measure, unplug the unit before attempting to hand crank the unit.

NOTE

If the actuator is operated by hand, it must only be operated by hand, otherwise there is a potential risk of overloading and hereby damaging the actuator.

Hand Crank Torque: 6-8 Nm.
Hand Crank Max Speed:. 65 rpm

The actuator is located under the floor in the second right baggage compartment.

After removing the cover (4 screws), locate the hand crank 6 mm hexagonal socket on the actuator (arrow below)

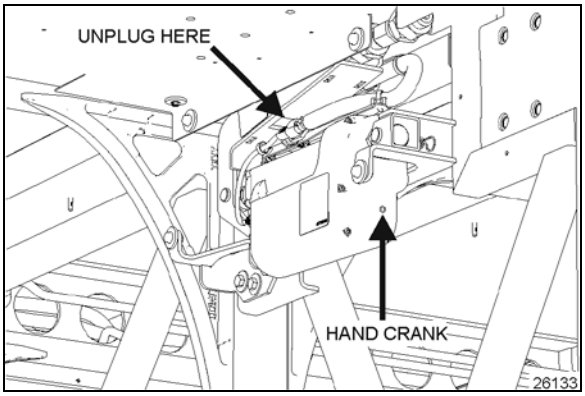

FIGURE 61: MOBILE FLOOR HAND CRANK HEX SOCKET LOCATION

THE COVER OVER THE ALLEN KEY SOCKET MUST BE UNSCREWED BEFORE THE 6MM ALLEN KEY CAN BE INSERTED AND THE HAND CRANK OPERATED.

WARNING

Make sure there are no objects or persons on the or around the floor while hand cranking.

Slowly operate the actuator at the indicated speed and torque.

20.10 FLOOR LIFT COMPONENT MAINTENANCE

No greasing is required on the floor lift shaft bushings or rollers for the complete life of the slide-out.

20.11 INFLATABLE SEAL

Refer to Paragraph 14.3 "SEAL"

20.12 FINISHING PRECAUTIONS FOR CONVERTERS

Observe these precautions when designing the finishing wall inside the slide-out room.

No drilling is allowed in the zone identified by Figure 62. This applies to fore and aft sides of the outer wall.

Area is 7” wide x 26” high and starts from the unfinished floor up to the bottom of the transverse horizontal tubing and 7 inches in from the inside of the room corner tubing.

This precaution is to avoid drilling through the flexible rail cover which slides up inside the wall when the slide-out is closed.

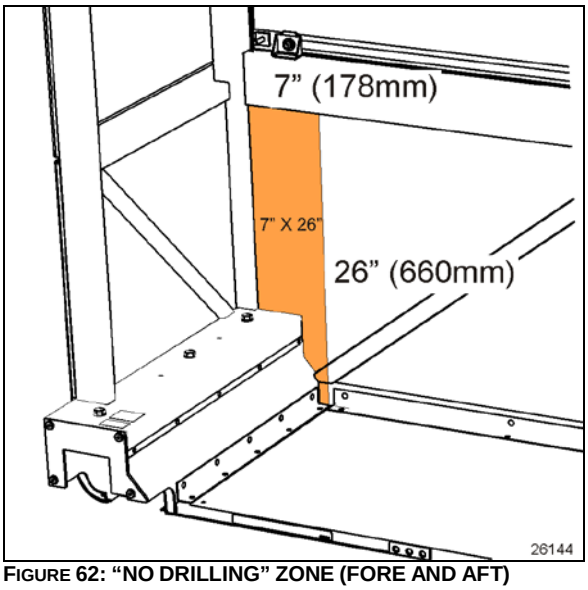

FIGURE 62: "NO DRILLING" ZONE (FORE AND AFT)

21 CONVERSION CHECKLIST

The converter should check these points before closing the walls covering the roof reinforcing rod and the pinions:

1. Check that the front slide-out exterior panels are parallel with the vehicle panels when retracted. If not, readjust the tilt.
2. Check that the slide-out is straight when completely extended, and that it leans against all inner stoppers.
3. Make sure the vehicle upper member is parallel with the front slide-out structure. If not, readjust the roof reinforcing rod. This may be affected by the loading on the roof.
4. Slide-out lower member deflection should be within 1/4". If not, redistribute the load.
5. Check slide-out operation. The slide-out should retract and extend smoothly without vibration.

Final check:

- Make sure the slide-out air pressure inlet valve is completely opened.
- Check the inflatable seal air pressure on the pressure regulator. The pressure should be 11 psi.

22 TROUBLESHOOTING

22.1 ERROR CONDITION OR MISSING OPERATION CONDITION

When an error condition or a missing operation condition is detected on a slide-out being operated, the green indicator light will blink on the control pad.
Turning the ignition OFF and ON again, will stop the blinking and reset the fault. If the error condition or a missing operation condition is still present, the blinking will start again the next time that the slide-out is operated.
To initiate fault diagnostic, use the DID right after operating the slide-out without cycling the ignition switch.

NOTE
The DID is the main tool for troubleshooting a multiplex vehicle. It is essential to have it in working condition.

Fault diagnostic

To get detailed information about the error condition or the missing operation condition, request a diagnostic using the dashboard Driver's Info Display (DID). Check if there are active errors in the slide-out electrical system. Highlight the DIAGNOSTICS menu and click Enter, highlight the VIEW ACTIVE FAULTS menu and click Enter, then highlight the ELECTRICAL SYSTEM menu and click Enter to request a diagnostic of the electrical system from the MCM.

Press the enter key. If applicable, the DID shows the device ID, the fault messages or fault codes recorded. When more than one fault is recorded, an arrow pointing down appears on the right of the display. Use the down arrow to see all the fault messages.

Once the problem is corrected, the DID will still shows the fault as being active. Leave VIEW ACTIVE FAULTS up to the main menu. Then return to DIAGNOSTICS, VIEW ACTIVE FAULTS, and then ELECTRICAL SYSTEM. The DID should not display any faults

22.2 TROUBLESHOOTING – OPERATING CONDITIONS, CONTROL & MECHANICAL COMPONENTS

PROBLEM	CAUSE	CORRECTIVE ACTION
The slide-out functions normally but the handheld control green indicator light blinks	Something is defective and may eventually create an issue if not repaired. The problem may be: A. Faulty limit sensor causing the slide-out to stop in overcurrent; B. CAN network problem causing the transmission inhibit safety to be non-operational; C. Vacuum pressure transducer disconnected or damaged (vacuum is applied for a fixed time of 7 seconds); D. Seal inflating valve solenoid open circuit (the seal is not re-inflated and water can penetrate in the vehicle); E. Security pin valve solenoid open circuit (the security pin is not extended while vehicle is riding).	Request a diagnostic from the electrical system using the MCD SYSTEM DIAGNOSTIC menu.
FLUSH FLOOR S/O ONLY Problem: The slide-out stops extending/retracting and the green indicator light flashes rapidly 3 times then one long flash (cycle repeats).	At least one of the mobile floor position switches is defective and the system requires operator's input to resume normal operation. The floor might also be out of level.	Depress the handheld control in the desired direction 3 times rapidly and hold it the fourth time until the slide out has reached the desired position.
FLUSH FLOOR S/O ONLY Problem: Slide out does not extend/retract.	The slide out stopped moving due to an obstruction.	Clear the path of the S/O and /or mechanism and resume operation.
FLUSH FLOOR S/O ONLY Problem: The slide-out does not extend/retract	At least one of the motors is defective.	Refer to manual override procedure

PROBLEM	CAUSE	CORRECTIVE ACTION
FLUSH FLOOR S/O ONLY Problem: Motor stopping temporarily during extend/retract sequence.	The slide out motors goes out of synchronization.	Make sure that load is distributed evenly across the slide out. Check for wear/obstructions in the slide out mechanism.
The slide-out does not extend	A. The parking brake is not seen by the controller as being applied; B. Not enough air pressure in the accessory air tank to permit proper operation of the vacuum generator; C. Faulty vacuum generator, connection to the vacuum generator open, seal deflating valve solenoid open circuit; D. I/O-B module output defective, regulated 5-volt supply to sensors shorted to ground, “out limit” sensor shorted to ground, connection to the motor negative relay solenoid open circuit;	A. Make sure the parking brake is applied. Confirm parking brake application with the parking brake light on the telltale panel. B. Run the engine at fast idle a few minutes to increase air pressure in the accessory air tank and try again. C. Turn the relieving shut-off valve handle clockwise to deflate the inflatable seal, disconnect the pressure transducer. Do not forget to reconnect the pressure transducer and to close the relieving shut-off valve. Failure to do so could damage the seal and lead to water infiltration; D. Operate the slide-out with the manual override procedures.
The slide-out does not retract	A. Not enough air pressure in the accessory air tank to permit proper operation of the vacuum generator; B. Faulty vacuum generator, connection to the vacuum generator open, seal deflating valve solenoid open circuit; C. I/O-B module output defective, “in limit” sensor shorted to ground, connection to the motor positive relay solenoid open circuit;	A. Run the engine at fast idle a few minutes to increase air pressure in the accessory air tank and try again. B. Turn the relieving shut-off valve handle clockwise to deflate the inflatable seal, disconnect the pressure transducer. CAUTION, do not forget to reconnect the pressure transducer and to close the relieving shut-off valve. Failure to do so could damage the seal and lead to water infiltration; C. Operate the slide-out with the manual override procedures.
When extending, the slide-out stops after having extended by 1 inch	A. The security pin valve solenoid circuit is shorted to (+) 24-volt and the security pin remains engaged;	A. Disconnect air supply from the security pin cylinder;

PROBLEM	CAUSE	CORRECTIVE ACTION
Transmission DRIVE range or REVERSE cannot be selected (the slide-out telltale light is illuminating).	A. Slide-out not in full "in" position; B. Faulty “in limit” sensor. The slide-out is retracted but the controller doesn’t not see it as retracted.	A. Retract slide-out. B. Confirm that all slide-outs are retracted. On the slide-out control panel, disconnect the 5 pins green connector on the I/O-B module to disable the transmission inhibit. CAUTION, this is a temporary measure, the vehicle must be serviced as soon as possible.
Slide-out does not retract or extend when depressing the control switch.	A. Electrical motor failure; B. Speed reduction gearbox failure; C. Security pin still engaged in receptacle; (Standard Prevost Slide-out)	A. Replace motor. B. Inspect gearbox components, particularly: bronze wheel or first reduction stage output shaft. Replace damaged components. C. Disengage pin and check if air cylinder is damaged.
Slide-out is not straight once retracted or during retracting or extending operation.	A. Broken rack tooth; B. Faulty rack attachment; C. Faulty shaft key at speed reduction gearbox or jaw coupling; D. Pinion keyless bushing slipping; E. Shaft breaking; F. Flange bearing attachment loosen;	A. Replace rack. B. Tighten mounting bolts, apply proper torque and use Loctite threadlocker (replace rack if necessary). C. Replace key or component having a damaged keyway. D. Realign slide-out and apply proper torque to keyless bushing. E. Replace shaft. F. Reposition shaft and tighten flange bearing mounting bolts.
Slide-out moves out slightly when vehicle is traveling.	A. Lower "in limit" stoppers are not leaning against the structure at the moment when the "in limit" sensor detects the magnet;	B. Adjust the sensor position in order to have contact of the stoppers against the structure at the time when the system stops the slide-out retraction.
Slide-out moves when vehicle is moving.	A. Inflatable seal not inflated	A. Check seal condition and seal air supply system.
Slide-out retracts or extends difficultly.	A. Foreign matters accumulated in the linear bearing;	A. Inspect the linear bearing end seals to see if they are in good condition. If not, replace the end seals and clean the inside of linear bearing.
Slide-out oscillates vertically when retracting or extending	a. Linear bearing balls hardened due to a too heavy load; b. Linear bearing mounting bolts loosen;	c. If balls clearance is excessive, replace linear bearing. d. Tighten mounting bolts.

PROBLEM	CAUSE	CORRECTIVE ACTION
Slide-out vibrating or noisy when extending or retracting	A. Acetal plastic block rubbing against the slide-out structure; B. Worn-out anti-friction coating on wiper seal around slide-out; C. Lower acetal plastic block rubbing against rail;	A. Realign acetal plastic block. B. Replace wiper seal. C. Remove lower acetal plastic block and machine down 1mm (0.039").
Top of slide-out moves sideways when vehicle is moving	A. Roof reinforcing rod misadjusted;	A. Readjust as per procedure.
Slide-out does not retract up to its full "in" position	A. Interference between the exterior extrusion and the vehicle upper horizontal member above the slide-out;	A. Check for straightness of horizontal member and adjust the roof reinforcing rod. B. Check for outer wiper seal lip straightness on the slide-out roof.
Bottom of slide-out not flush with vehicle body	a. Broken or misadjusted lower "in limit" stopper; b. Lower "in limit" stoppers are not leaning against the structure at the moment when the "in limit" sensor detects the magnet; c. Acetal plastic block serving as leaning surface for lower "in limit" stopper broken or moved;	d. Replace or adjust lower "in limit" stopper. e. Adjust the sensor position in order to have contact of the stoppers against the structure when slide-out is stopped. f. Replace or adjust acetal plastic block proper position.
Top of slide-out not flush with vehicle body	A. Broken or misadjusted leveling or retaining screw; B. Faulty upper “in limit" stopper;	A. Check and replace screw. B. Replace upper “in limit" stopper.
Lower edge of slide-out not parallel with vehicle body opening	A. Faulty leveling and retaining screw (8 screws each side).	C. Inspect screw, replace and adjust slide-out level.

PROBLEM	CAUSE	CORRECTIVE ACTION
Watertightness problem	A. Inflatable seal and/or wiper seal damaged or unstuck; B. Insufficient air pressure in the seal; C. No air pressure in the slide-out pneumatic system; D. Sealant missing; E. Wiper seal draining hole clogged; F. Faulty water recovery pan; G. Faulty internal gutter;	A. Check both seals condition. B. Check the pressure regulator, the relieving shut-off valve and the seal valve condition. C. Check the slide-out air pressure inlet valve condition and the accessory air tank pressure. D. Check the exterior extrusion screws, the windows and the exterior panels sealant condition. E. Unclog draining hole. F. Check the recovery pan. G. Check internal gutter.
Knocking sound at end of travel when extending slide-out	A. Inner stoppers misadjusted;	A. Readjust the inner stoppers.
Knocking sound when parking brake is released	A. Security pin retracts too rapidly;	A. Adjust security pin air flow regulator.
Inflatable seal damaged or removed, or wiper seal unstuck from the structure.	A. Slide-out has been retracted or extended with the manual procedure with the inflatable seal not deflated; B. Pressure transducer malfunction; C. Faulty roof reinforcing rod adjustment; D. Seal valve malfunction; E. Excessive load in the slide-out; F. Slide-out not centered in the structure opening;	A. Always deflate the seal when manually retracting or extending the slide-out. B. Check the pressure transducer condition, replace if necessary. C. Readjust the roof reinforcing rod. D. Check the seal valve condition. E. Reduce load or distribute load evenly in order to respect the deflection criterion and slide-out load capacity. F. Readjust the slide-out height and center horizontally in opening.
Friction at end of travel when in full OUT position or at beginning of retraction	A. Interference between upper structure key and upper inner stopper;	A. Readjust the upper inner stopper.

22.3 SLIDE-OUT FAULT MESSAGE ON DID

SID #	FAULT MESSAGE	TEXT	PROBABLE CAUSE	CORRECTIVE ACTION
1	Voltage Module A56	Value Too Low	Module A56 sees a Voltage less than 22.0V on its power supply connector. Breaker, fuse or wiring harness open.	Check/ reset circuit breaker CB9. Check/ replace fuse FSo5 Fix wiring harness
2	No Response Mod A56	Data Error	MCM module does not receive CAN communication from module A56. Connector J3 is disconnected or CAN wiring harness open, or module A56 is defective.	Check connection A56 J3 Fix CAN wiring harness Replace module A56
3	Voltage Module A57	Value Too Low	Module A57 sees a Voltage less than 22.0V on its power supply connector. Breaker, fuse or wiring harness open.	Check/ reset circuit breaker CB9. Check/ replace fuse FSo2 Fix wiring harness
4	No Response Mod A57	Data Error	MCM module does not receive CAN communication from module A57. Connector J3 is disconnected or CAN wiring harness open or module A57 is defective.	Check connection A57 J3 Fix CAN wiring harness Replace module
5	SldO Vacuum Sensor	Open Circuit	Pressure transducer disconnected. Faulty pressure transducer. Connection or wiring harness open.	Check/ replace vacuum transducer Check/ reconnect the connector SESo1 Fix wiring harness
		Shorted High	Pressure transducer is faulty Wiring harness shorted to 12v or 24v	Check/ replace vacuum transducer Fix wiring harness
6	SldO Seal Def Vac	Mechanical Fault	Does not reach vacuum level (-5 PSIG). Slide-out seal damaged or air leak in the seal deflating pneumatic circuit. Accessories tank near empty.	Check the seals and the pneumatic circuit. Run engine at fast idle to recharge accessories tank.
7	SldO Motor/Limit se	Mechanical Or Electrical Fault	**Standard Prevost slide-outs**: Slide-Out motor is activated for more than 7 seconds and the limit sensor from the departing end is still seen as active. Either the motor is defective and the slide-out is not moving or the limit sensor from the departing end is broken active.	**Standard Prevost slide-outs**: If the slide-Out is not moving, then check the motor and its wiring. If the slide-out is moving, then check the limit sensor from the departing end, also check and clear any obstruction that might prevent the slide-out from moving. (If problem occurs when extending, check the in-limit sensor. If the problem occurred when retracting, then check the out-limit sensor).

SID #	FAULT MESSAGE	TEXT	PROBABLE CAUSE	CORRECTIVE ACTION
			Prevost slide-out with flush floor: Slide-Out motor is activated for more than 2 seconds, motor current is abnormally low or slide-out hasn't moved	**Prevost slide-out with flush floor:** Check and clear any obstructions in the direction of travel. Either the motor or its wiring is defective, check and replace components as required.
8	SldO Park Br Signal	Mechanical Or Electrical Fault	Parking brake is not applied. Wire between parking brake switch and MCM is open.	Make sure the parking brake is applied and the parking brake telltale illuminates. Check / replace parking brake switch. Fix wiring harness.
		Shorted High	Wire between parking brake switch and MCM is shorted to 12v or 24v.	Fix wiring harness.
9[2]	SldO Mot SpeedA Ctr	Shorted High	Wiring harness shorted to 12v or 24v	Fix wiring harness
		Current Above normal	Security pin or object stop the movement of a slide-out	Check / fix security pin functionality. Check / remove any object around the slide-out.
10	SldO Mot SpeedB Ctr	Shorted High	Wiring harness shorted to 12v or 24v	Fix wiring harness
		Current Above normal	Security pin or object stop the movement of a slide-out	Check / fix security pin functionality. Check / remove any object around the slide-out.
11	SldO Remote Led	Shorted High	LED or wiring harness shorted to 12v or 24v	Fix LED or wiring harness
		Shorted Low	Led or wiring harness shorted to ground	Fix LED or wiring harness
		Open Circuit	LED is broken. Bad connection on control pad. Wiring harness is cut.	Check / fix remote LED or connection Check /fix wiring harness
		Current Above normal	Led or wiring harness shorted to 12v or 24v	Fix Led or wiring harness
12	SldO Seal Inf Sol	Shorted High	Solenoid or wiring harness shorted to 12v or 24v	Fix solenoid or wiring harness
		Shorted Low	Solenoid or wiring harness shorted to ground	Fix solenoid or wiring harness
		Open Circuit	Solenoid is broken or open. Bad connection on solenoid or bloc valve. Wiring harness is cut.	Check / fix solenoid or connection Check /fix wiring harness
		Current Above normal	Solenoid or wiring harness shorted to 12v or 24v	Fix solenoid or wiring harness
13	SldO Seal Def Sol	Shorted High	Solenoid or wiring harness shorted to 12v or 24v	Fix solenoid or wiring harness
		Shorted Low	Solenoid or wiring harness shorted to ground	Fix solenoid or wiring harness

[2] For SID items 9 & 10 (*SldO Mot SpeedX Ctr*) it should be noted that standard Prevost slide-outs are now only wired to ''*SpeedA Ctr output*''. ''*SpeedB Ctr output*'' can be used as a spare in the event output A fails. On Prevost slide-out with flush floor, the front motor is wired to ''*SpeedA Ctr output*''; rear motor is wired to ''*SpeedB Ctr output*''. Also note that Prevost slide-out with flush floor is not equipped with a security pin.

SID #	FAULT MESSAGE	TEXT	PROBABLE CAUSE	CORRECTIVE ACTION
		Open Circuit	Solenoid is broken or open. Bad connection on solenoid or bloc valve. Wiring harness is cut.	Check / fix solenoid or connection. Check /fix wiring harness
		Current Above normal	Solenoid or wiring harness shorted to 12v or 24v	Fix solenoid or wiring harness
14	SldO Vacc Gen Sol	Shorted High	Solenoid or wiring harness shorted to 12v or 24v	Fix solenoid or wiring harness
		Shorted Low	Solenoid or wiring harness Shorted to ground	Fix solenoid or wiring harness
		Open Circuit	Solenoid is broken or open. Bad connection on solenoid or bloc valve. Wiring harness is cut.	Check / fix solenoid or connection Check / fix wiring harness
		Current Above normal	Solenoid or wiring harness shorted to 12v or 24v	Fix Solenoid or wiring harness
15[3]	SldO Mot Neg Rly	Shorted High	Relay coil or wiring harness shorted to 12v or 24v	Fix relay coil or wiring harness
		Shorted Low	Relay coil or wiring harness shorted to ground	Fix relay coil or wiring harness
		Open Circuit	Relay coil is broken or open. Bad connection on relay. Wiring harness is cut.	Check / fix relay coil or connection Check / fix wiring harness
		Current Above normal	Relay coil or wiring harness shorted to 12v or 24v	Fix relay coil or wiring harness
16	SldO Mot Pos Rly	Shorted High	Relay coil or wiring harness shorted to 12v or 24v	Fix relay coil or wiring harness
		Shorted Low	Relay coil or wiring harness shorted to ground	Fix relay coil or wiring harness
		Open Circuit	Relay coil is broken or open. Bad connection on relay. Wiring harness is cut.	Check / fix relay coil or connection Check / fix wiring harness
		Current Above normal	Relay coil or wiring harness shorted to 12v or 24v	Fix relay coil or wiring harness
17	SldO Open Sw	Shorted High	Switch or wiring harness shorted to 12v or 24v	Fix switch or wiring harness
18	SldO Close Sw	Shorted High	Switch or wiring harness shorted to 12v or 24v	Fix switch or wiring harness
19	SldO Limit In Se	Shorted High	Sensor or wiring harness shorted to 12v or 24v	Fix sensor or wiring harness
20	SldO Limit Out Se	Shorted High	Sensor or wiring harness shorted to 12v or 24v	Fix sensor or wiring harness
21	SldO Secu Pin Sol[4]	Shorted High	Solenoid or wiring harness shorted to 12v or 24v	Fix solenoid or wiring harness
		Shorted Low	Solenoid or wiring Harness shorted to ground	Fix solenoid or wiring harness
		Open Circuit	Solenoid is broken or open. Bad connection on solenoid or bloc valve. Wiring harness is cut.	Check / fix solenoid or connection. Check / fix wiring harness
		Current Above normal	Solenoid or wiring harness shorted to 12v or 24v	Fix solenoid or wiring harness

[3] Items 15 & 16 (*SldO Mot XXX Rly*) apply to standard slide outs.
[4] Applies to standard Prevost slide-outs only.

SID #	FAULT MESSAGE	TEXT	PROBABLE CAUSE	CORRECTIVE ACTION
22	SldO Limit In Out	Mechanical Or Electrical Fault	**Standard prevost slide-out**: In Limit and Out Limit are seen at the same time. In Limit or Out Limit problem.	Check / replace in limit or out limit sensors Fix wiring harness.
			Prevost slide out with flush floor: Indicates that a sensor returns a value which is either out of range or impossible to reach during normal operation of the slide-out	Check adjustment and functionality of sensors. Refer to ''Slide-Out Sensor out of Range'' and / or ''Flush Floor Sensor Out of Range'' sections for additional information.
23[5]	Limit Sensor 5 V supply	Shorted Low	5v IO-B output is less than 2v. Wiring harness is open or shorted to ground.	Check 5v output on IO-B / replace IO-B module. Fix wiring harness.
94	SldO4 Fr Sensor Out Of R Front Slide-Out Sensor out of Range	Value Below or Above Normal	Sensor output outside of normal operating range	Check Fuse 104 and sensor wiring, repair as needed.
		Mechanical Fault	Slide-out is retracted or extended too far. Bad sensor adjustment.	Make sure sensor and magnet mounting brackets are secured and haven't come loose. These are factory adjusted and normally don't require to be readjusted. In the event that a sensor would require to be readjusted, contact your Prevost service representative.
95	SldO4 Rr Sensor Out Of R Rear Slide-Out Sensor out of Range	Value Below or Above Normal	Sensor output outside of normal operating range	Check Fuse 104 and sensor wiring, repair as needed.
		Mechanical Fault	Slide-out is retracted or extended too far. Bad sensor adjustment.	Make sure sensor and magnet mounting brackets are secured and haven't come loose. These are factory adjusted and normally don't require to be readjusted. In the event that a sensor would require to be readjusted, contact your Prevost service representative.
96	FFlr4 Fr Sensors Out Of R Front Flush Floor Sensor Out of Range	Shorted Low	Sensor Shorted to ground	Check Fuse 15 and sensor wiring, repair as needed.
		Shorted High	Sensor shorted to 12V or 24V supply	
		Value Below or Above Normal	Sensor's output outside of normal operating range	
		Mechanical Fault	Bad sensor adjustment	Se_FF4_XXUp should be located above SeFF4_XXDn. Make sure the sensor head is adjusted 1.5mm (0.06'') away from the sliding bracket that activates it.

[5] Applies to standard Prevost slide-outs only

SID #	FAULT MESSAGE	TEXT	PROBABLE CAUSE	CORRECTIVE ACTION
97	FFlr4 Rr Sensors Out Of R Rear Flush Floor Sensor Out of Range	Shorted Low	Sensor Shorted to ground	Check Fuse 15 and sensor wiring, repair as needed.
		Shorted High	Sensor shorted to 12V or 24V supply	
		Value Below or Above Normal	Sensor's output outside of normal operating range	Se_FF4_XXUp should be located above SeFF4_XXDn. Make sure the sensor head is adjusted 1.5mm (0.06'') away from the sliding bracket that activates it.
		Mechanical Fault	Bad sensor adjustment	
98	Flush Floor 4 Out of Lvl Flush Floor Out of Level	Mechanical or Electrical Fault	Both sides of the flush floor (front and rear) don't (de)activate position sensors at the same time. Floor position sensors are not triggered or deactivated at the same time.	Inspect flush floor area and remove any obstacle, resume operation. Make sure that sensors are in the right order; Se_FF4_XXUp should be located above SeFF4_XXDn. Also verify that the sensor heads are adjusted 1.5mm (0.06'') away from the sliding bracket that activates them. Check sensor(s) and corresponding wiring, repair/replace as required
99	SldO4 out of Sync Slide Out out of sync	Mechanical or Electrical Fault	One of the sides of the Flush floor slide-out is desynchronized more than 6mm (1/4'') in relation to the other side.	Clear any obstruction in the path of the slide-out, resume operation. Make sure that mounting brackets for the sensors and magnets are still secure and undamaged. Note: These are factory adjusted and normally don't require to be readjusted. In the event that a sensor would require to be readjusted, contact your Prevost service representative..
100	FFlr4 Mot Neg Rly	Shorted High	Relay coil or wiring harness shorted to 12v or 24v	Fix relay coil or wiring harness
		Shorted Low	Relay coil or wiring harness shorted to ground	Fix relay coil or wiring harness
		Open Circuit	Relay coil is broken or open. Bad connection on relay. Wiring harness is cut.	Check / fix relay coil or connection Check / fix wiring harness
		Current Above normal	Relay coil or wiring harness shorted to 12v or 24v	Fix relay coil or wiring harness
101	FFlr4 Mot Pos Rly	Shorted High	Relay coil or wiring harness shorted to 12v or 24v	Fix relay coil or wiring harness
		Shorted Low	Relay coil or wiring harness shorted to ground	Fix relay coil or wiring harness
		Open Circuit	Relay coil is broken or open. Bad connection on relay. Wiring harness is cut.	Check / fix relay coil or connection Check / fix wiring harness
		Current Above normal	Relay coil or wiring harness shorted to 12v or 24v	Fix relay coil or wiring harness

SID #	FAULT MESSAGE	TEXT	PROBABLE CAUSE	CORRECTIVE ACTION
102	SldO4 Mot Neg Rly	Shorted High	Relay coil or wiring harness shorted to 12v or 24v	Fix relay coil or wiring harness
		Shorted Low	Relay coil or wiring harness shorted to ground	Fix relay coil or wiring harness
		Open Circuit	Relay coil is broken or open. Bad connection on relay. Wiring harness is cut.	Check / fix relay coil or connection Check / fix wiring harness
		Current Above normal	Relay coil or wiring harness shorted to 12v or 24v	Fix relay coil or wiring harness
103	SldO4 Mot Pos Rly	Shorted High	Relay coil or wiring harness shorted to 12v or 24v	Fix relay coil or wiring harness
		Shorted Low	Relay coil or wiring harness shorted to ground	Fix relay coil or wiring harness
		Open Circuit	Relay coil is broken or open. Bad connection on relay. Wiring harness is cut.	Check / fix relay coil or connection Check / fix wiring harness
		Current Above normal	Relay coil or wiring harness shorted to 12v or 24v	Fix relay coil or wiring harness

CONTENTS

1 TORQUE TABLES 3

2 OVERVIEW 5

2.1 INNER STOPPER 6
2.1.1 Maintenance 6
2.1.2 Adjustment 6
2.2 "IN LIMIT" STOPPER 7
2.2.1 Maintenance 7
2.2.2 Adjustment 7
2.3 EXTERIOR EXTRUSION 8

3 SECURITY PIN 8

3.1 MAINTENANCE 8
3.2 AIR CYLINDER REPLACEMENT 8

4 ROOF REINFORCING ROD 9

5 RACK 9

5.1 MAINTENANCE 9
5.2 FRONT SLIDE-OUT RACK REPLACEMENT 9
5.3 REAR SLIDE-OUT RACK REPLACEMENT 10

6 PINION 10

6.1 PINION AND KEYLESS BUSHING POSITIONING 10
6.2 FRONT SLIDE-OUT SHAFT PINION REPLACEMENT 11
6.3 REAR SLIDE-OUT SHAFT PINION REPLACEMENT 11
6.4 KEYLESS BUSHING 11
6.4.1 Installation 12

7 ELECTRIC MOTOR 15

7.1 MAINTENANCE 15
7.2 REPLACEMENT 15

8 SPEED REDUCTION GEARBOX 15

8.1 MAINTENANCE 15
8.2 GEARBOX REPLACEMENT 15

9 JAW COUPLING 16

9.1 MAINTENANCE 16
9.2 REPLACEMENT & ADJUSTMENT 16

10 FLANGE BEARING 17

11 LOCKING COLLAR 17

11.1 INSTALLATION 17

12 LINEAR BEARING AND RAIL 17

12.1 BEARING MAINTENANCE 17
12.2 BEARING REPLACEMENT & ADJUSTMENT 17
12.3 LEVEL & TILT ADJUSTMENT 18

12.3.1 Procedure 18
12.4 RAIL MAINTENANCE 19
12.5 RAIL REPLACEMENT 19

13 ACETAL PLASTIC BLOCKS 20

13.1 REMOVAL / INSTALLATION 20

14 SLIDE-OUT PNEUMATIC SYSTEM 21

14.1 DESCRIPTION 21
14.2 MAINTENANCE 22
14.3 SEAL 22
14.3.1 Maintenance 23
14.3.2 Seal assembly removal 23
14.3.3 Seal assembly installation 23
14.3.4 Slide-out 2" inside retraction 24

15 SLIDE-OUT ELECTRICAL SYSTEM 25

15.1 ELECTRICAL INTERCONNECTION WITH PREVOST VEHICLE 25
15.2 SLIDE-OUT BREAKERS / FUSES 25
15.2.1 Multiplex fuses 25
15.3 PROBING VOLTAGE ON THE MULTIPLEX CIRCUITS 26
15.4 MODULE REPLACEMENT 26
15.5 SLIDE-OUT LIMIT SENSORS 26
15.5.1 Maintenance and adjustment 26

16 SLIDE-OUT EXTERIOR FINISHING PANELS & WINDOWS 27

17 WELDING PRECAUTION 27

18 SLIDE-OUT MANUAL OVERRIDE PROCEDURES 27

18.1 PRELIMINARY CONDITIONS FOR MANUAL OVERRIDE PROCEDURE 27
18.1.1 Manual retracting procedure – Front and rear slide-out 28
18.1.2 Manual extending procedure – Front and rear slide-out 28

19 SLIDE-OUT MAXIMUM LOAD 29

20 CONVERSION CHECKLIST 30

21 TROUBLESHOOTING 31

21.1 ERROR CONDITION OR MISSING OPERATION CONDITION 31
21.2 TROUBLESHOOTING – OPERATING CONDITIONS & CONTROL 31
21.3 TROUBLESHOOTING - MECHANICAL COMPONENTS 33
21.4 SLIDE-OUT FAULT MESSAGE ON DID 36

1 TORQUE TABLES

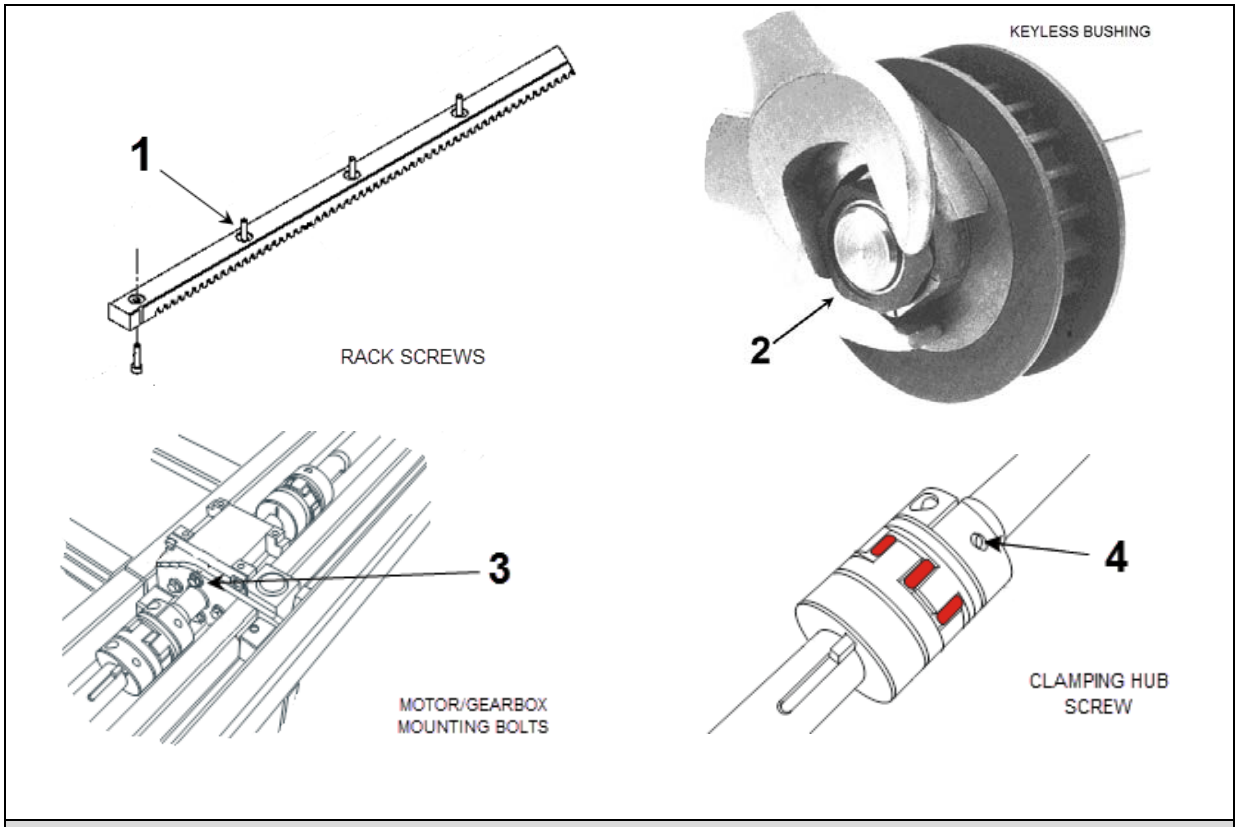

MISCELLANEOUS		
No	DESCRIPTION	TORQUE
1	Rack mounting bolt	1.9-2.1 lb-ft (3-3 Nm) maximum
2	Keyless bushing	120-130 lb-ft (163-176 Nm)
3	Drive motor/gearbox assembly mounting bolts	16-20 lb-ft (22-27 Nm)
4	Jaw coupling clamping hubs screw	16-20 lb-ft (22-27 Nm)

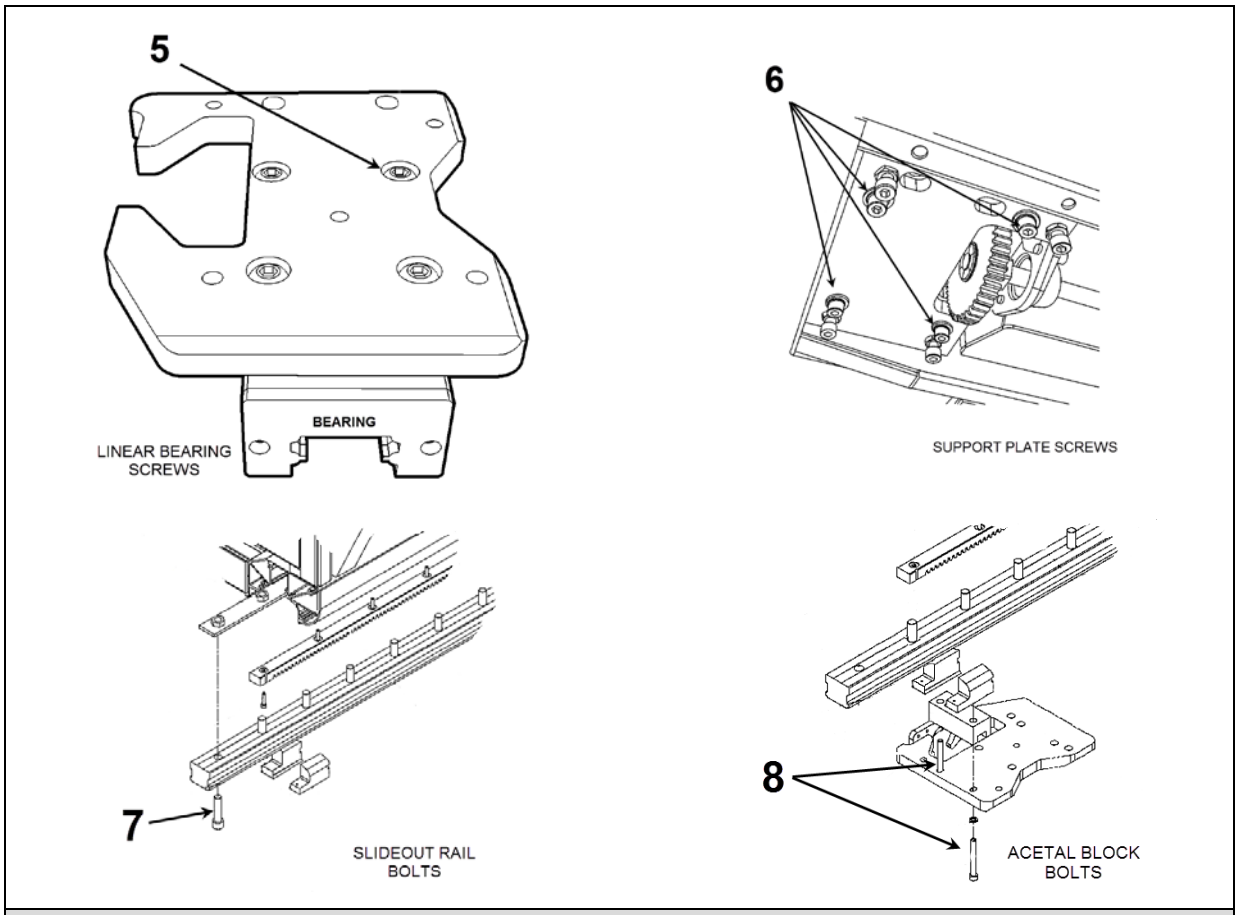

MISCELLANEOUS		
No	DESCRIPTION	TORQUE
5	Linear bearing mounting screws	59 lb-ft (80 Nm)
6	Linear bearing support plate retaining screws	45-55 lb-ft (61-75 Nm)
7	Rail mounting bolts	90-100 lb-ft (122-136 Nm)
8	Acetal block mounting bolts	6.5-7.5 lb-ft (9-10 Nm)

2 OVERVIEW

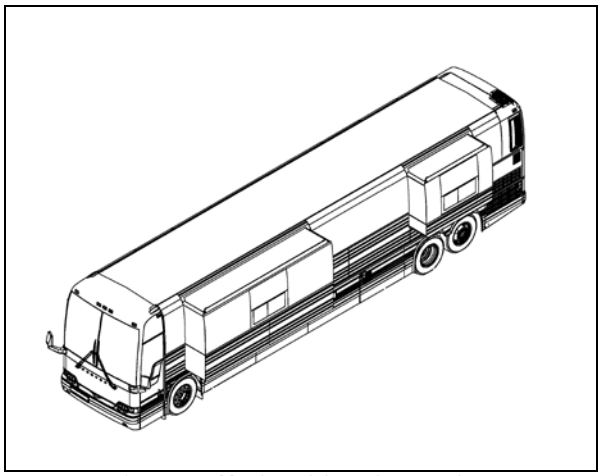

FIGURE 1: X3-45 VIP TYPICAL CONFIGURATION

X3-45 VIP can be fitted with up to two slide-outs. (**Erreur ! Source du renvoi introuvable.**)

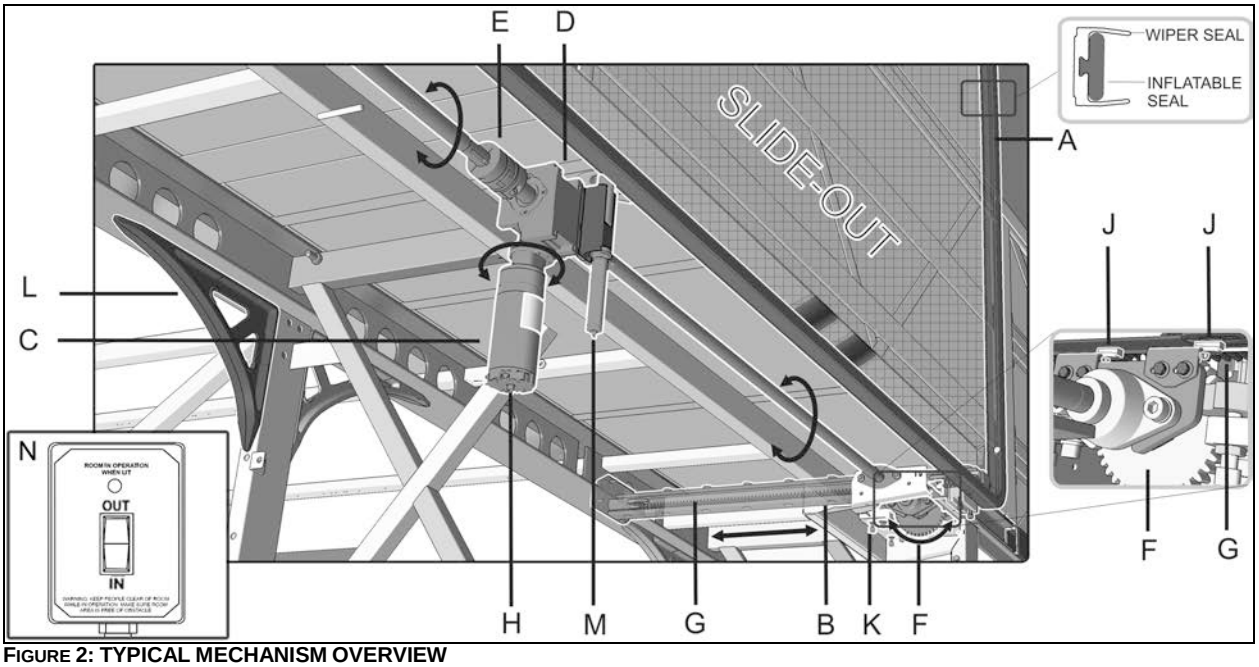

FIGURE 2: TYPICAL MECHANISM OVERVIEW

Each slide-out is moved in and out on rails resting on linear bearings Figure 2, (**B**). Power comes from one electrical motor (**C**). It is either oriented vertically or horizontally. The motor drives a right angle speed reducing gearbox (**D**).

Water tightness of the slide-out is ensured by a wiper seal and an inflatable seal (**A**).

The gearbox is coupled to a drive shaft with Lovejoy jaw couplings (**E**) and two pinion gears (**F**). Rack gears (**G**) transform pinion gear rotation into horizontal motion. Manual extension or retraction is possible by the motor shaft extension (**H**). Closely follow instructions provided further in this manual to perform this procedure.

The system includes in and out limit proximity sensors (**J**) and physical inner and outer stoppers.

Tilt and leveling adjustment is carried-out by the adjustment plate and screws (**K**).

Structural integrity of the vehicle platform is ensured with stainless steel casting corner reinforcements (**L**) in the luggage bays and a roof reinforcement rod for the front slide-out.

A security pin locks the slide-out in the retracted or “in” position for road travel. (**M**)

Extension and retraction of the slide-out room is performed using the Control Pad (**N**). One control pad per room is provided. Final location of the control pad may vary from one vehicle to another depending on interior layout and vehicle converter.

Logic control and operation is achieved by using the same Volvo multiplex modules found on the vehicle chassis. Troubleshooting is performed through the DID.

The flip-down control panel is typically located in the first road side luggage bay, attached to the ceiling.

2.1 INNER STOPPER

The front slide-out is equipped with six inner stoppers laid out in the following way: two stoppers on the top horizontal member of the slide-out, and two stoppers on each vertical upright, while the rear slide-out is equipped with only three stoppers (Figure 3 & Figure 4). The upper inner stoppers are used to provide a support to position perpendicularly the slide-out with the vehicle structure.

The side inner stoppers are used to block the extension of the slide-out. They act as ultimate physical limits but take note that when the “out limit” sensors are properly adjusted, the slide-out extension stops before the side inner stoppers reach the side structure keys (Figure 3 & Figure 4).

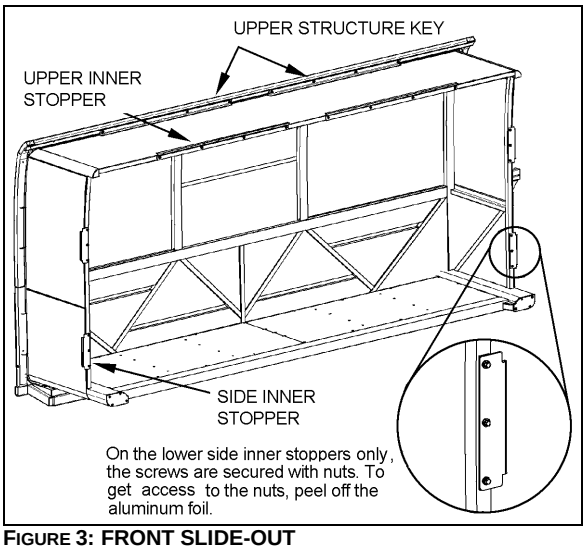

FIGURE 3: FRONT SLIDE-OUT

2.1.1 Maintenance

Check that the inner stopper screws are tight and that no damage or deformation has taken place for both the side and the upper stoppers.

2.1.2 Adjustment

1. Adjust the side inner stoppers at 1/8" from the vehicle side structure keys, and tighten the screws. Make sure there is a minimum gap of 2mm (0.079”) between the side inner stopper and the side window pane (Figure 5). Use shim as required.
2. Adjust the upper structure key and the upper inner stoppers according to FIGURE 4 with <u>the seal deflated</u>. When inflating, the seal presses the roof structure upward and at that moment, the upper inner stopper comes into contact with the upper structure key

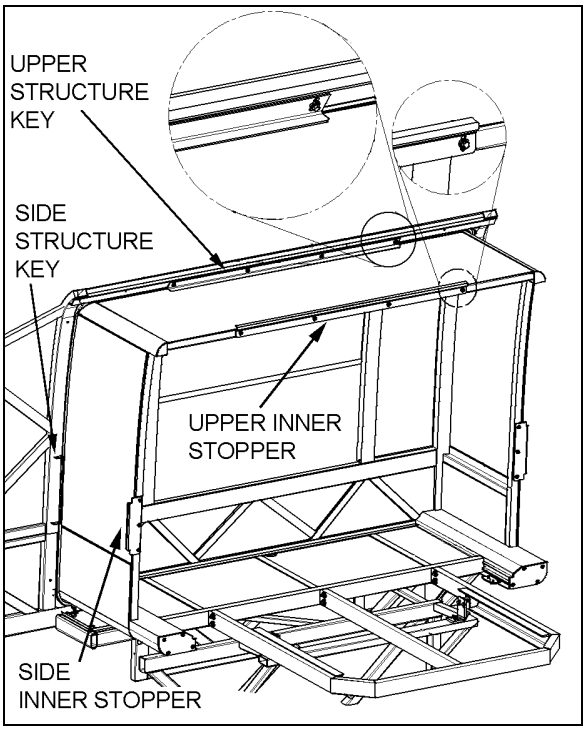

FIGURE 4: REAR SLIDE-OUT

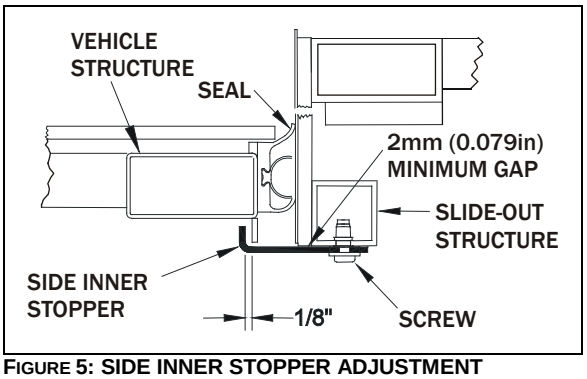

FIGURE 5: SIDE INNER STOPPER ADJUSTMENT

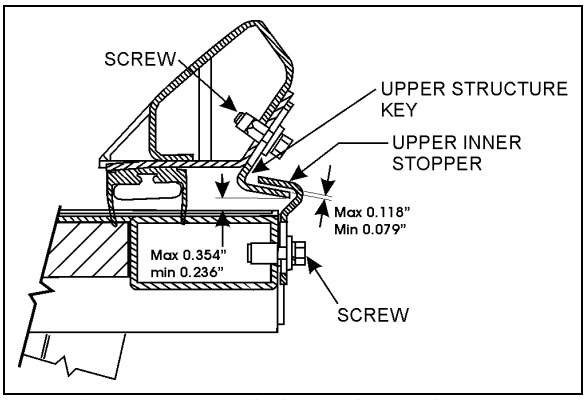

FIGURE 6: UPPER INNER STOPPERS ADJUSTMENT

2.2 "IN LIMIT" STOPPER

Each slide-out has four "in limit" stoppers. Two "in limit" stoppers are mounted on the exterior extrusion at the top of the slide-out (Figure 8) and two other "in limit" stoppers are mounted under the slide-out, next to the rail (Figure 7). These stoppers are used to position the outer face of the slide-out flush with the vehicle body when retracted.

2.2.1 Maintenance

Check that the "in limit" stoppers are clean and that there is no foreign matter accumulated between the stopper and their bearing surface. Check that the screws and set screws (where applicable) locking the stoppers in proper position are tight.

2.2.2 Adjustment

NOTE
To properly adjust the "in limit" stoppers, the slide-out system must be turned off to prevent the "in limit" sensors from stopping the slide-out movement before having the "in limit" stoppers contacting their bearing surface.

1. Extend the slide-out partially.
2. Set the ignition switch to the OFF position.
3. To adjust the lower "in limit" stoppers, loosen the set screw and then rotate the stopper CW or CCW to move it back or forward depending on the required adjustment. To adjust the upper plastic "in limit" stoppers, add or remove shims as required between the stopper and the extrusion.
4. Using the manual override procedure (paragraph 18), move the slide-out up to its full "in" position.
5. Using a straight edge, check if the outer face of the slide-out is flush with the vehicle body with the stoppers contacting their bearing surface. Readjust the stoppers if necessary.
6. Readjust the "in limit" sensor.

NOTE
To make sure that the lower "in limit" stoppers are contacting their bearing surface (the acetal plastic blocks) when the slide-out is closed, put white paint on the "in limit" stopper before and check if the acetal plastic blocks are marked with paint.

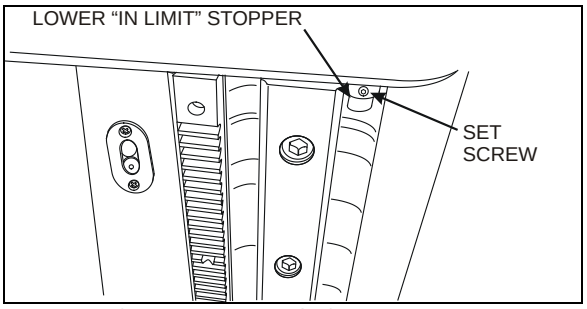

FIGURE 7: LOWER "IN LIMIT" STOPPER

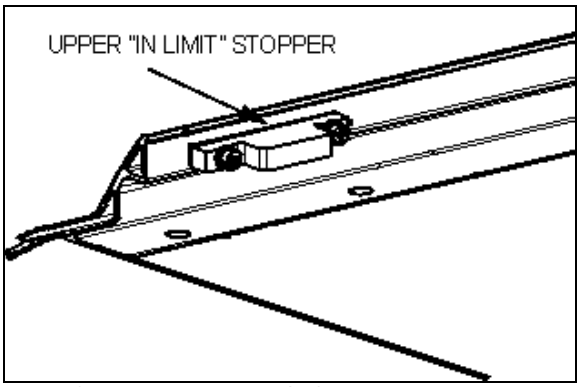

FIGURE 8: UPPER "IN LIMIT" STOPPER

2.3 EXTERIOR EXTRUSION

The exterior extrusion function is to provide a leaning surface for the inflatable seal. When inflating, the seal leans against the extrusion and presses the roof structure upward until it rests on the inner side of the extrusion.

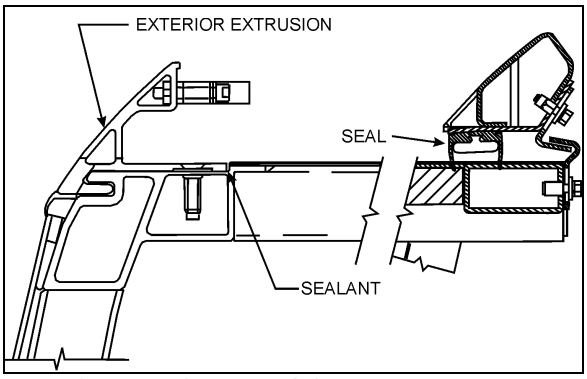

FIGURE 9: EXTERIOR EXTRUSION

Maintenance

Inspect the exterior extrusion for any deformation or deterioration. Check that the screws are tight. Inspect sealant condition on screw heads and between the extrusion and the vehicle structure, and also at both ends of the extrusion. If needed, clean old sealant and replace with Sika 221 sealant or equivalent product.

3 SECURITY PIN

During normal ride, the slide-out cannot extend by itself because the 740:1 ratio speed reduction worm gear type gearbox system is not reversible, the output shafts are self-locking. The security pin purpose is to lock the slide-out in retracted position if an accident occurs. It is built to withstand great lateral acceleration of the slide-out.

The system consists of a stainless steel pin connected to a single action/spring return pneumatic cylinder (Figure 10). The pin engages in the slide-out receptacle with releasing of the parking brake. A knocking sound may be heard at this moment. An O-ring is located at the base of the pin housing to reduce knocking when the pin retracts. The lower hole on the pin housing permits water to drain. The upper hole permits to insert a small screwdriver to prevent the pin from rotating when the air cylinder has to be removed.

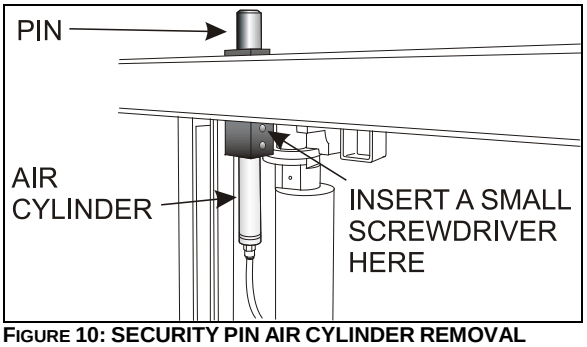

FIGURE 10: SECURITY PIN AIR CYLINDER REMOVAL

3.1 MAINTENANCE

Inspect air cylinder and fitting for air leaks. Periodically, check that the pin retracts and engages in the receptacle as it should when the parking brake is applied or released.

To extend the slide-out, it must be at full “IN” position with the engine running. If the pin produces excessive knocking when it engages upon parking brake release, reduce air cylinder speed by adjusting the air flow regulator on the pneumatic control panel (Figure 32, item 11).

3.2 AIR CYLINDER REPLACEMENT

1. Ensure the parking brake is applied.

2. Disconnect the cylinder air tubing from the 2nd baggage compartment (front slide-out) or under the bed structure (rear slide-out).
3. Using a wrench at its lower end, unscrew the air cylinder from the pin housing.
4. Insert a small screwdriver through the pin and housing to prevent rotation of the pin an then, unscrew the cylinder rod from the pin.
5. Transfer the fitting on the new cylinder. Place Teflon on threads.
6. Cylinder installation is like removal but in reverse order.

4 ROOF REINFORCING ROD

CAUTION

The front slide-out roof reinforcing rod may have to be adjusted after a load variation inside the vehicle or on the top of the vehicle.

CAUTION

Always lock the turnbuckle using the jam nut to prevent loosening.

The roof reinforcing rod is located on the upper horizontal member of the front slide-out opening and is welded on the roof arches (Figure 11).

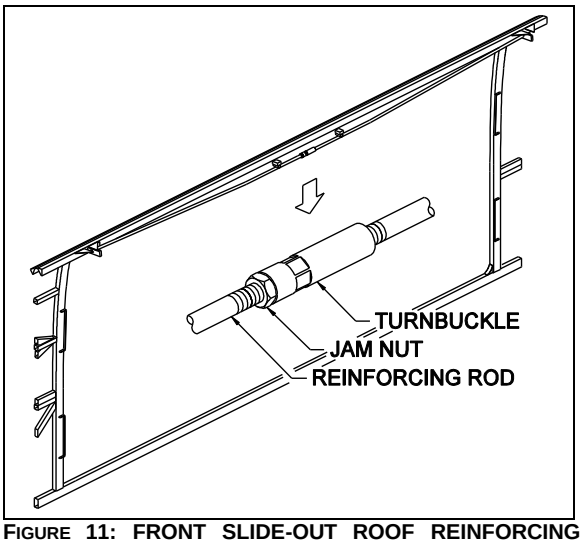

FIGURE 11: FRONT SLIDE-OUT ROOF REINFORCING ROD

This rod allows an adjustment between the slide-out horizontal member and the roof. When screwing the turnbuckle, the roof is moved upward, and vice versa. Maximum allowable adjustment upward is 3mm (1/8”). Exceeding this value may damage the mechanism.

Use this rod to adjust the horizontal member parallel to the slide-out. A member not parallel with the slide-out may cause the inflatable seal to leave the wiper seal or may reduce the inflatable seal and wiper seal efficiency.

CAUTION

Do not exceed 3mm (1/8”) upward adjustment.

5 RACK

Slide-out movement is made by a system of racks and pinions. There are two racks on each slide-out.

5.1 MAINTENANCE

Once a year, check the racks for broken or worn tooth, especially the front slide-out racks. Also, check the rack fastening hole teeth that are weaker and might break (Figure 12). Replace the racks if excessive wear is present. Clean racks from sand or other debris. Check that the racks are properly secured. Check the backlash between the gear and the rack. Excessive backlash indicates rack wear.

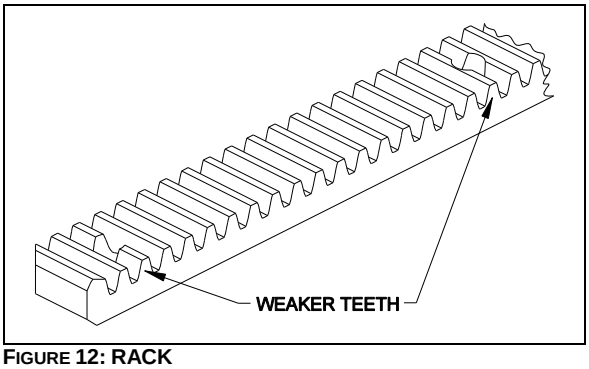

FIGURE 12: RACK

5.2 FRONT SLIDE-OUT RACK REPLACEMENT

1. Remove the slide-out from the vehicle (removal must be performed according to the Slide-Out Removal Procedure. Ask your Prevost service representative).
2. From under the slide-out, unscrew all the rack screws and remove the rack.

3. Install a new rack and tighten the screws. Use Loctite™ 242 or equivalent product on threads.

TORQUE: 1.9-2.1 lb-ft (3-3 Nm) MAX

4. Reinstall the front slide-out inside the vehicle.

CAUTION

The counter boring required for recessed screw heads reduces plastic thickness. Do not torque higher than specified.

5.3 REAR SLIDE-OUT RACK REPLACEMENT

1. Using the slide-out control pad or the manual override procedure (paragraph 18, if using the manual override procedure, do not forget to deflate the inflatable seal completely), extend the slide-out about one foot.
2. From outside, unscrew and remove only the first two screws of the rack to be changed.
3. Using the manual override procedure (paragraph 18) only, retract the slide-out to its fully closed position.
4. Loosen the pinion keyless bushing of the rack to be changed.
5. From under the slide-out, unscrew all the rack screws and remove the rack.
6. Install a new rack between the slide out structural rack seat and the pinion and tighten the screws. Use Loctite™ 242 or equivalent product.

TORQUE: 1.9-2.1 lb-ft (3-3 Nm)

CAUTION

The counterboring required for recessed screw heads reduces plastic thickness. Do not torque higher than specified.

7. Tighten the pinion keyless bushing as described in paragraph 6.4.
8. Using the slide-out manual override procedure only, extend the slide-out about one foot.
9. Tighten the two remaining crews. Use Loctite™ 242 or equivalent product.

TORQUE: 1.9-2.1 lb-ft (3-3 Nm) MAX

10. Using the slide-out control pad key or the manual override procedure, retract the slide-out to its fully closed position.
11. Re-inflate the air seal and confirm pressure is around 11 psi on the pressure gage. (Item 7, Figure 32)

6 PINION

CAUTION

Make sure all keyless bushings are tightened to specification before moving the slide-out. Refer to paragraph 6.4 for torque wrench settings. A lower torque value may cause the bushing to slip on the shaft, and a higher torque value may break the bushing.

TORQUE: 120-130 lb-ft (163-176 Nm)

6.1 PINION AND KEYLESS BUSHING POSITIONING

For trouble-free operation, respect the dimensions and configuration shown on the following figure.

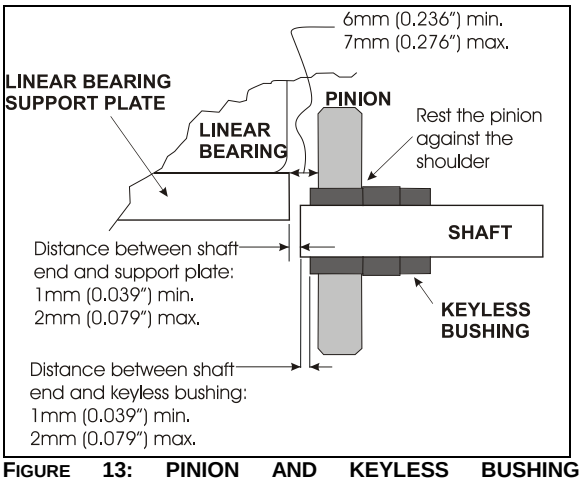

FIGURE 13: PINION AND KEYLESS BUSHING POSITIONING

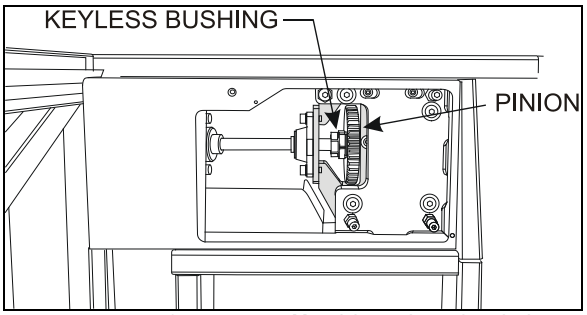

FIGURE 14: PINION AND KEYLESS BUSHING AS SEEN FROM EVAPORATOR COMPARTMENT

6.2 FRONT SLIDE-OUT SHAFT PINION REPLACEMENT

CAUTION

Before reinstalling the pinion, clean the following surfaces with alcohol to prevent slippage.

- o Pinion bore;
- o Keyless bushing I.D. and O.D.;
- o Shaft.

Before proceeding with the front slide-out shaft pinion replacement, check the following conditions:

- The locking collars located on the side of the pinion being replaced are disengaged;
- The drive motor/gearbox assembly is removed (see paragraph 8.2);

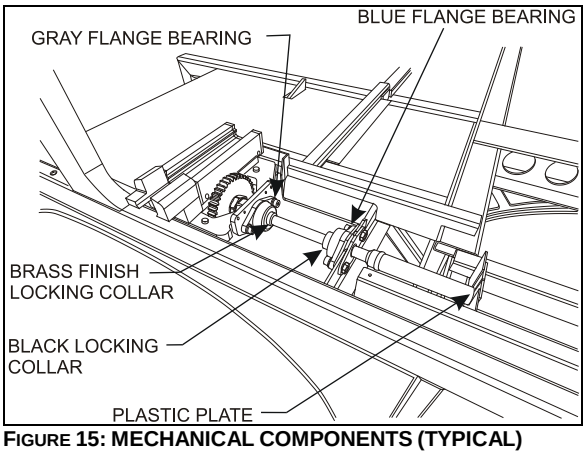

FIGURE 15: MECHANICAL COMPONENTS (TYPICAL)

1. Loosen the keyless bushing (see paragraph 6.4) of the pinion to be replaced. Slide the pinion and its bushing out of the shaft. Check the keyless bushing condition and replace if needed.

NOTE

If necessary, loosen the blue and gray flange bearing to move the pinion away from the rack.

2. Assemble new pinion on the keyless bushing and then slide on the shaft. Do not tighten the bushing at this moment.
3. Properly position the shaft end in relation to the linear bearing support plate (See Figure 13) and then tighten the locking collars to maintain the shaft in that position.
4. Position pinion and keyless bushing as shown on Figure 13 and tighten the keyless bushing as described in paragraph 6.4.
5. Reinstall the drive motor/gearbox assembly.

CAUTION

Make sure the keyless bushing is tightened to specification before moving the slide-out. Refer to paragraph 6.4.1 for torque wrench settings.

TORQUE: 120-130 lb-ft (163-176 Nm)

6.3 REAR SLIDE-OUT SHAFT PINION REPLACEMENT

The procedure is similar to the front slide-out shaft pinion replacement. Gain access to the mechanism from under the bed structure. Refer to paragraph 6.2.

6.4 KEYLESS BUSHING

The keyless bushings need a specific tightening torque value to ensure proper pinion transmitting torque. They also need specific tools to be tightened.

To tighten or loosen the keyless bushing, use those specific tools:

- crowfoot wrench 1 ½";
- torque wrench;
- combination wrench 1 ¾";
- pipe wrench;
- drive extension 5";
- socket 1 ½".

6.4.1 Installation

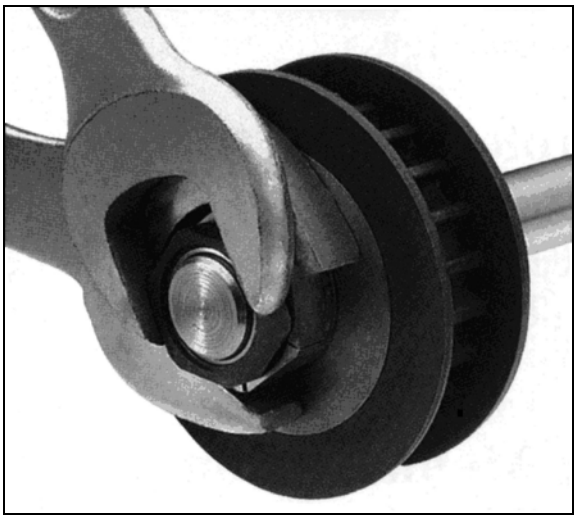

FIGURE 16: KEYLESS BUSHING TIGHTENING

To tighten the keyless bushing, use a special open-end wrench to retain the yellow part and another wrench to tighten the black part. Figure 18 shows how to tighten the keyless bushing. When tightening, make sure the pinion does not move or rotate.

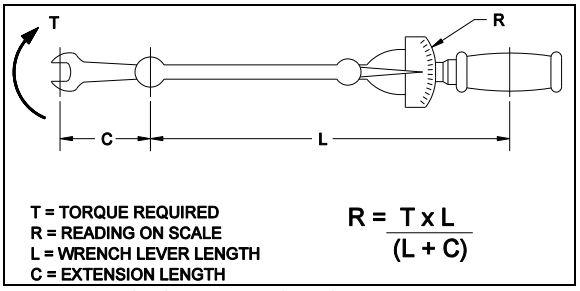

FIGURE 17: TORQUE WRENCH FORMULA

CAUTION

Make sure all keyless bushings are tightened to specification before moving the slide-out. A lower torque value may cause the bushing to slip on the shaft, and a higher torque value may break the bushing. The torque may need to be recalculated depending of the wrench size. Refer to Figure 17 for wrench size compensation.

TORQUE: 120-130 lb-ft (163-176 Nm)

Take note that when the keyless bushing nut is tightened, the pinion moves about 1/16" to 3/32" toward the slide-out center.

NOTE

On the front slide-out, the driver side keyless bushing is not accessible for tightening or removal unless you remove the front left wheel. If the slide-out has been removed, this keyless bushing should be tightened before reinstalling the slide-out.

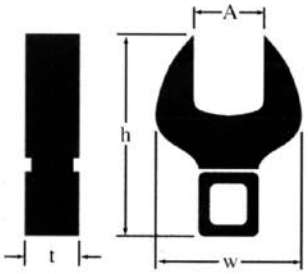

Style C
Installation Nut

WRENCHES FOR INSTALLATION

Fenner Drives offers a complete line of high-quality crowfoot wrenches for installation and to provide counter-torque. These wrenches are much narrower than earlier designs and are specifically for use with Trantorque GT units. It is recommended that both wrenches be used when installing a Trantorque GT unit.

1/2" SQUARE DRIVE

Shaft Size	Part Number	Wrench Style	Dimensions (inches)			
			A	h	w	t
13/16 to 1	6202990024	C	1-1/2	3.44	2.75	0.75

INSTALLATION INSTRUCTIONS

A Trantorque GT Keyless Bushing offers flexible and easy installation while providing exceptional holding power. To ensure a Trantorque GT unit performs as specified, it must be installed properly.

Warning: Use no lubricants in this installation.

1. Shaft and component bore must be within ±0.003"(±0.08mm) [±0.0015"(±0.04mm)Mini Series] of stated bore diameter and must have a surface finish of 32-125 Ra (roughness average). If the surface finish is outside these specified values, consult Fenner Drives.

2. Both shaft and component bore must be completely free of paint, grease, oil, and dirt. If necessary, clean the surfaces with a non-petroleum based solvent, such as isopropyl alcohol.

Warning: Do not lubricate the Trantorque GT bushing or shaft. The use of any lubricant on the contact surfaces could result in bushing failure and will void all warranties.

3. Insert the Trantorque GT unit into the component to be mounted, making sure the mating hub is flush against the shoulder at the hex flats.

4. Position the assembly at the desired location on the shaft and hand-tighten the nut (clockwise) until the assembly becomes snug on the shaft.

Warning: Do not hammer or use any type of impact to force the Trantorque GT assembly along the shaft.

Warning: The shaft must fully engage the shaft gripping area (Figure 1) of the Trantorque GT unit. Figure 2 illustrates minimum shaft engagement.

5. Using a torque wrench, tighten the nut to the proper installation torque. See table for torque value. (Note: Fenner Drives has available crowfoot wrenches for square drives in sizes from 1/2" to 3-1/2".) The hex flats on the outer ring are provided for counter-torque, eliminating the need to hold the component or shaft while applying installation torque.

Note: At full installation torque, the assembly will have moved approximately ±0.075"(±1.9mm)[±0.045"(±1.1mm)Mini Series] axially along the shaft away from the nut. If axial position is critical it may be necessary to loosen the nut and reposition the assembly.

Warning: Over-tightening the nut could damage the Trantorque GT unit and/or the mounted component.

Do not use an impact wrench in the installation.

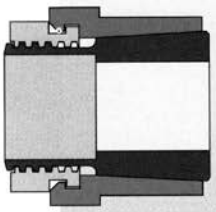

Figure 1

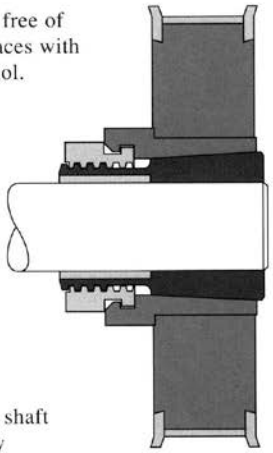

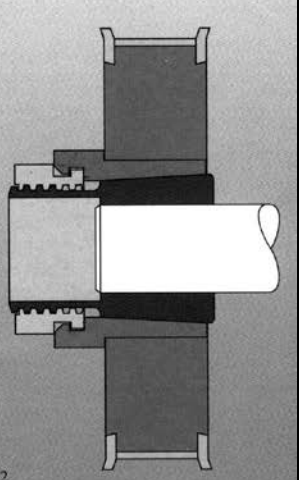

Figure 2

Installation Torque on Nut

	Inch Pound System		Metric System	
	Shaft Size	In.Lbs.	Shaft size	N-m
MINI SERIES	3/16–1/4	125	5–6mm	14.1
	5/16–3/8	150	7–9mm	17.0
	7/16–1/2	175	10–12mm	19.8
	9/16–5/8	200	14–16mm	22.6
	3/4	700	17mm	80.0
STANDARD SERIES	5/8–3/4	1200	15–19mm	136
	13/16–1	1500	20–25mm	170
	1-1/16–1-1/4	2000	28–32mm	225
	1-5/16–1-1/2	2300	34–38mm	260
	1-9/16–1-3/4	2800	40–42mm	316
	1-13/16–2	4900	45–50mm	554
LARGE SERIES	2-1/16–2-1/4	5300	55mm	600
	2-5/16–2-1/2	5600	60mm	635
	2-9/16–2-3/4	6000	65–70mm	680
	2-13/16–3	6600	75mm	750

FIGURE 18: KEYLESS BUSHING INSTALLATION INSTRUCTIONS

7 ELECTRIC MOTOR

The power is supplied by a 24V, 1/3 HP electric motor coupled with a speed reduction gearbox.

Opposite to the gearbox, the motor is equipped with a 3/8 hexagonal socket shaft extension allowing slide-out movement without the control pad.

This shaft extension is used to move the slide-out at low speed during the inner stoppers adjustment, the tilt adjustment or the 2" inside retraction.

See paragraph 18 for the manual override procedures.

CAUTION

When moving the slide-out with a cordless power drill as described in the manual override procedure, be careful as the slide-out approaches the open or closed position, in order not to overload the mechanism.

7.1 MAINTENANCE

Inspect the electrical connections and water seal condition. Check that the mounting bolts are tight (Figure 20).

7.2 REPLACEMENT

1. The slide-out must be retracted half way in.

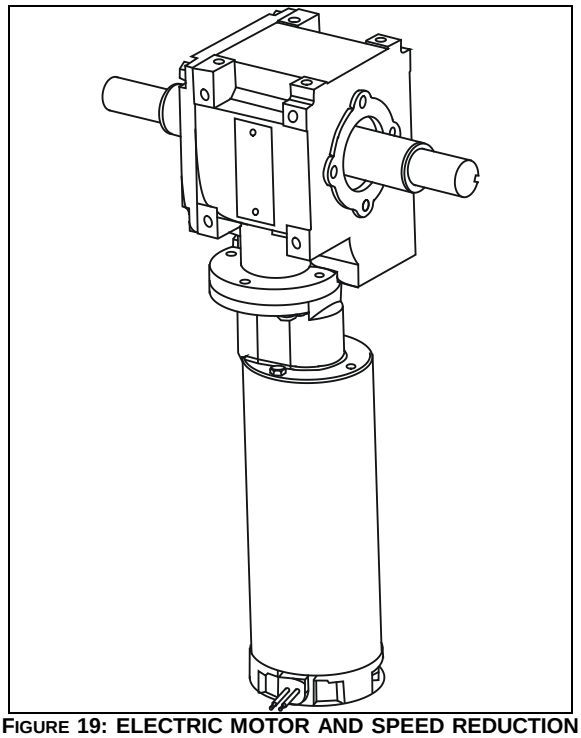

FIGURE 19: ELECTRIC MOTOR AND SPEED REDUCTION GEARBOX

2. Unplug the electric cable connector.
3. Remove the motor from the gearbox.
4. Fasten the new motor to the gearbox using screws.
5. Re-connect the electric cable connector.

8 SPEED REDUCTION GEARBOX

The speed reduction gearbox used is a helical worm gear type. This gearbox has a 2-stage 740:1 ratio and the output shafts are self-locking. Keys on output shafts are glued into keyseats.

8.1 MAINTENANCE

Inspect the gearbox to check if there is any leakage or backlash in the box. Replace the gearbox if excessive wear is present. Check that all bolts are tight.

The gearbox is lubricated for life and the oil should not have to be changed.

8.2 GEARBOX REPLACEMENT

1. The slide-out must be retracted half way in.
2. Disengage the shaft jaw couplings (refer to paragraph 9: JAW COUPLING).

3. Remove the 4 cap screws securing the drive motor/gearbox assembly and dismount the assembly.
4. Remove the gearbox from the motor and install the new one.
5. Reinstall the drive motor/gearbox assembly on the vehicle mounting bracket. Tighten mounting bolts in a criss-cross patern.

TORQUE: 16-20 lb-ft (22-27 Nm)

CAUTION

To prevent damaging threads, use your fingers to drive the bolts into the aluminum gearbox housing mounting holes.

6. Reinstall the jaw couplings.

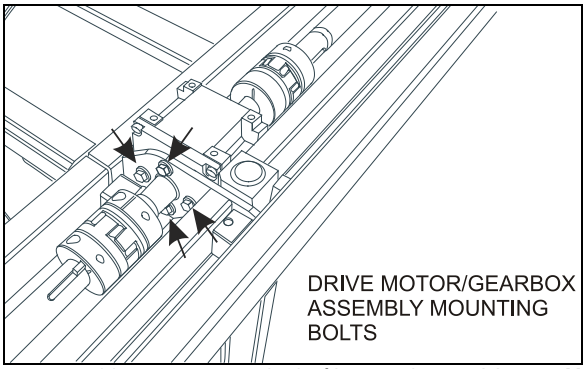

FIGURE 20: DRIVE MOTOR/GEARBOX ASSEMBLY MOUNTING BOLTS

9 JAW COUPLING

9.1 MAINTENANCE

Inspect the jaw couplings to check if there is backlash between the key and the keyway. Also, check the spider condition. Check that the clamping screws are tight.

9.2 REPLACEMENT & ADJUSTMENT

1. The slide-out must be retracted.
2. Disengage the jaw coupling: loosen the clamping screw on each clamping hub. If required, rotate the motor shaft extension as described in the manual override procedure (paragraph 18) to get to the clamping screws.
3. Separate both clamping hubs.

NOTE

It may be necessary to loosen the blue flange bearings to move the shaft out of the way.

4. Clean and degrease the hub bore and the shaft.
5. Push the new clamping hubs onto the shaft (pinion side).
6. Install a clamping hub on one of the gearbox shaft (opposite side of gearbox mounting bolts) flush with the shaft extremity (Figure 21) and tighten the clamping screw.

TORQUE: 16-20 lb-ft (22-27 Nm)

7. Install the second clamping hub on the gearbox shaft. Position the clamping hubs so that they are flush with the shafts extremity (Figure 21).

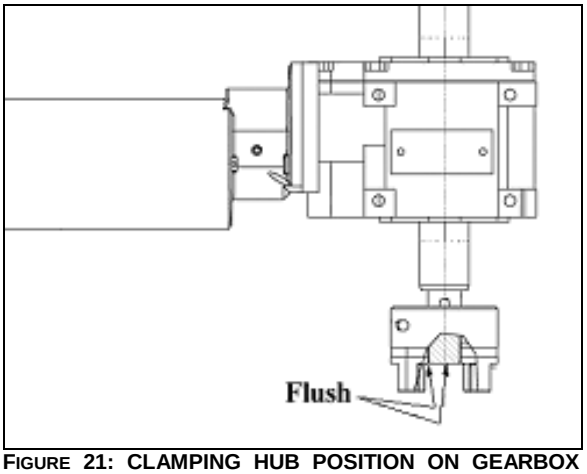

FIGURE 21: CLAMPING HUB POSITION ON GEARBOX SHAFT

8. Reconnect the clamping hubs with the spider. Leave a gap of 20mm (0.787inch) between each clamping hubs as shown on Figure 22. Use the motor hexagonal socket output shaft to align the keyways.
9. Tighten clamping screws.

TORQUE: 16-20 lb-ft (22-27 Nm)

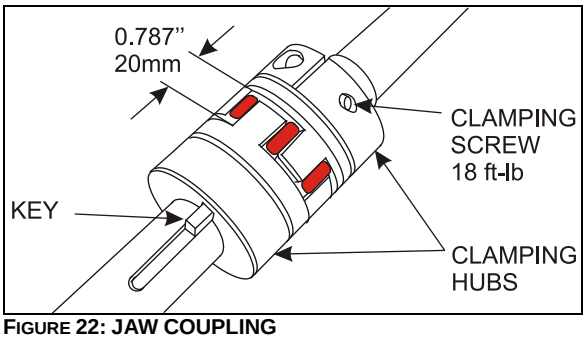

FIGURE 22: JAW COUPLING

10 FLANGE BEARING

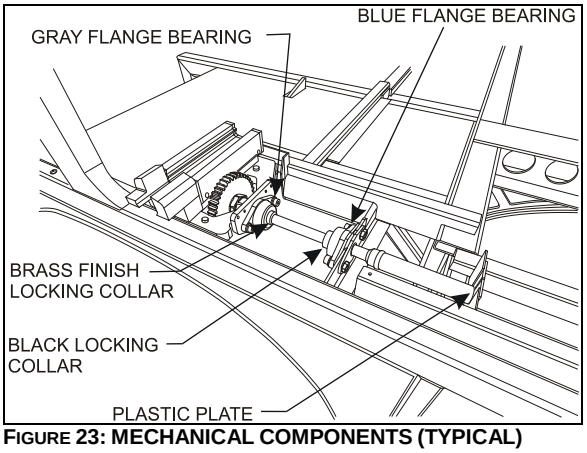

FIGURE 23: MECHANICAL COMPONENTS (TYPICAL)

There are two different types of flange bearing on the slide-out mechanism (Figure 23). Their purpose is to maintain the shaft in position while permitting rotation. The gray flange bearings are fixed to the linear bearing support plate and are not adjustable. The blue flange bearings are fixed to a support with oblong holes allowing vertical adjustment to follow the linear bearing support plate position as it is being adjusted.

The flange bearings are pre-lubricated and no subsequent lubrication is required due to the very low extending and retracting speed of the slide-out system.

11 LOCKING COLLAR

The locking collar secures the shaft and the flange bearing together using friction. Once locked, it prevents axial translation and rotation of the shaft in the flange bearing bore.

11.1 INSTALLATION

Slide the locking collar along the shaft up to the flange bearing (Figure 15). Turn the locking collar clockwise while maintaining it pressed against the flange bearing. Knock the collar with a punch to lock it in place, there is a cavity on the collar made for that purpose. Tighten the set screw.

To remove, loosen the set screw and release the locking collar using groove joint pliers or a small pipe wrench.

12 LINEAR BEARING AND RAIL

Rail and linear bearing system provide precise frictionless linear movement together with high load carrying capacity and high stiffness. This standardized equipment is fully interchangeable.

To prevent corrosion, an electrolytic black film treatment is performed to the rail. Do not strike the rail with metal tools, this could damage the treatment.

After the rail is mounted to the slide-out base, a cap is used to cover the bolt hole to prevent foreign matters from clogging up the hole or from entering into the ball slide. The cap for the bolt hole is made of synthetic resin which has very high resistance to oil and wear.

12.1 BEARING MAINTENANCE

Make every effort not to allow dust and foreign objects to enter inside the linear bearing.

The linear bearings are pre-lubricated and no subsequent lubrication is required.

12.2 BEARING REPLACEMENT & ADJUSTMENT

1. Remove the slide-out from the vehicle (removal must be performed according to the Slide-Out Removal Procedure. Ask your Prevost service representative).
2. Disconnect the jaw coupling on the side of the linear bearing being replaced (refer to paragraph 9).
3. Dismount the blue flange bearing.
4. From the mechanism access panel, remove the retaining screws A, B, C & D (see Figure 26).
5. Remove the support and bearing assembly. Turn the assembly upside down to access the bearing mounting screws (Figure 24)

Dismount the linear bearing and install the new one.

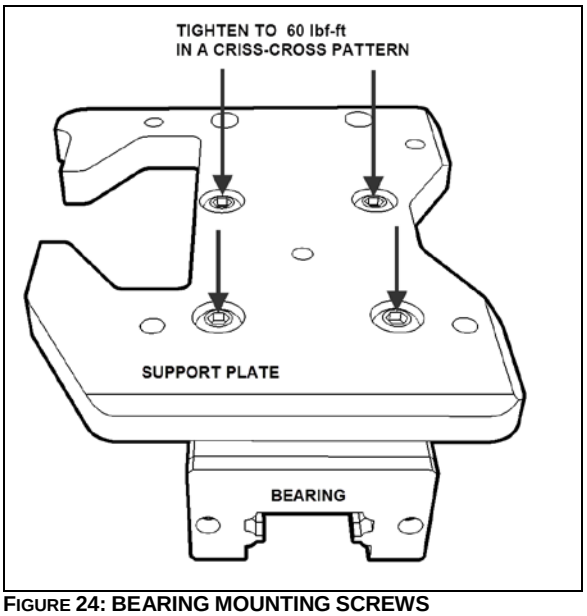

FIGURE 24: BEARING MOUNTING SCREWS

6. Tighten the mounting bolts in a crisscross pattern.

TORQUE: 59 lb-ft (80 Nm)

7. Reinstall the support plate, retaining screws, blue flange bearing and reengage the jaw coupling. Refer to the specific procedures.

12.3 LEVEL & TILT ADJUSTMENT

Leveling of the slide-out is done by changing the linear bearing support plate height using the leveling screws 1, 2, 3, 4 (Figure 26). When proper level is attained, the retaining screws A, B, C & D maintain the support plate seated on the leveling screws. Also, the retaining screws prevent the slide-out from tipping inside the vehicle when it is retracted.

The slide-out is slightly tilted. When retracting, the upper "in limit" stoppers touch first the vehicle structure, followed by the lower "in limit" stoppers. Tilt adjustment is done by changing the linear bearing support plate inclination using the leveling screws 1 & 2 as pivot and 3 to adjust the angle (Figure 26).

12.3.1 Procedure

NOTE

*For the **front slide-out**, the front linear bearing leveling screws are accessible from the access panel located over the front wheel while the rear linear bearing leveling screws are accessible from the access panel in the evaporator compartment. For the **rear slide-out**, access the linear bearing from under the bed structure or the radiator compartment.*

WARNING

The slide-out must be retracted when the level and tilt adjustment is performed.

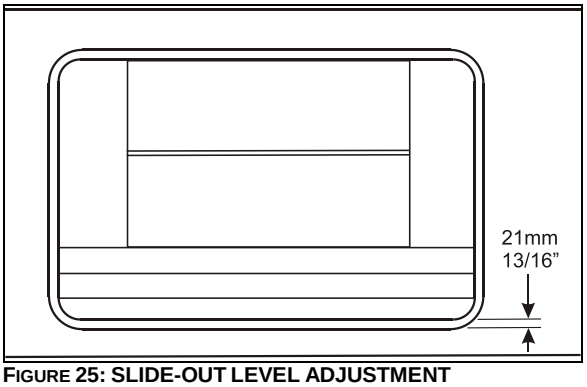

FIGURE 25: SLIDE-OUT LEVEL ADJUSTMENT

Before proceeding with the level and tilt adjustment, check the following conditions:

- The slide-out is retracted;
- The 2 lower “in limit” stoppers are perfectly adjusted, that means that the lower edge of the slide-out outer panel is flush or slightly in by 2mm (3/32”) with the vehicle body when retracted;
- The 2 upper “in limit” stoppers are removed from the slide-out (see Paragraph 1.2).

1. Loosen the blue flange bearings mounting screws (Figure 15).
2. For front slide-out only, loosen the two plastic plates mounting screws along the shafts (Figure 15).
3. With the lower edge of the slide-out outer panel flush with the vehicle body, adjust the slide-out level. The distance between the top of the horizontal member under the slide-out

and the slide-out under panel must be 21mm (13/16” approximately).

WARNING

Never unscrew completely retaining screw A, B, C, D or the slide-out may tip inside.

To raise the linear bearing support plate, turn leveling screw 1 & 2 clockwise. Slightly and gradually, loosen the retaining screws A & B as the support plate elevates, but keep the retaining screws tighten.

To lower the linear bearing support plate, turn screw 1 & 2 counterclockwise. As the support plate goes down, maintain the retaining screw A & B tighten.

4. Loosen retaining screws C & D. Unscrew leveling screw 4. Now, the support plate should be resting on leveling screw 1, 2 & 3.
5. Using leveling screw 3, adjust the tilt in order to have the top of the slide-out recessed by 5mm (7/32") (see Figure 27).
6. When proper tilt is attained, tighten leveling screw 4 so that it comes into contact with the support plate.
7. Loosen slightly leveling screw 3 and then tighten it so it is perfectly in contact with the support plate. Make sure screws 1, 2, 3 & 4 are in contact with the support plate.
8. Loosen retaining screw A & B.
9. Using a crisscross pattern, tighten progressively (3 rounds) the retaining screw A, B, C & D.

   TORQUE: 45-55 lb-ft (61-75 Nm)

10. Ensure that the leveling screw 1, 2, 3 & 4 are firmly leaning on the support plate and then firmly tighten the jam nuts.
11. Verify that the tilt is still properly adjusted (7/32").

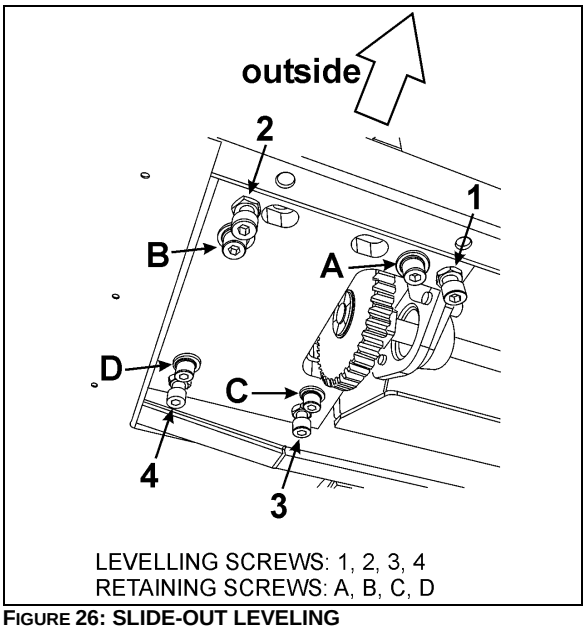

FIGURE 26: SLIDE-OUT LEVELING

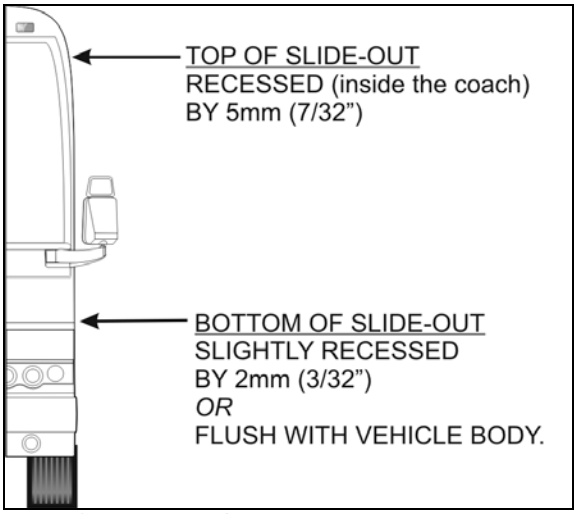

FIGURE 27: TILT ADJUSTMENT

12.4 RAIL MAINTENANCE

Check that all the caps for the bolt hole are present. Missing caps must be replaced. To insert a cap into the rail bolt hole, use a flat tool. Pound the cap gradually until its height becomes flush with the rail top face.

Clean accumulated dirt from the rails with a soft cloth.

12.5 RAIL REPLACEMENT

1. Remove the slide-out from the vehicle (removal must be performed according to the Slide-Out Removal Procedure. Ask your Prevost service representative).

2. Remove the bolt hole cap covers. To do so, pierce a hole in the center and hook them out. They will not be reusable.
3. Remove the rail mounting bolts.
4. Wipe off the rust preventive oil applied to the new rail. Remove burrs and small bumps on the slide-out mounting face with an oilstone.
5. Carefully place the rail on the bed on its mounting face.

NOTE
*The rail is bolted to a flat bar on which weldnuts are mounted. The flat bar is inserted in the slide-out lower body extrusion and can be removed through the end cap (*Figure 28*).*

6. Adjust the flat bar position to align the weldnuts with the rail mounting holes.
7. Temporarily tighten the bolts.
8. Adjust the rail position per Figure 28. For each rail, make sure the gap is the same on both sides of the rail. Use acetal blocks to inspect the gap.
9. For final tightening of the bolts, tighten on either end of the rail and then start to the other end. Use blue Loctite ™ on threads.

TORQUE: 90-100 lb-ft (122-136 Nm)

10. Install the bolt caps.

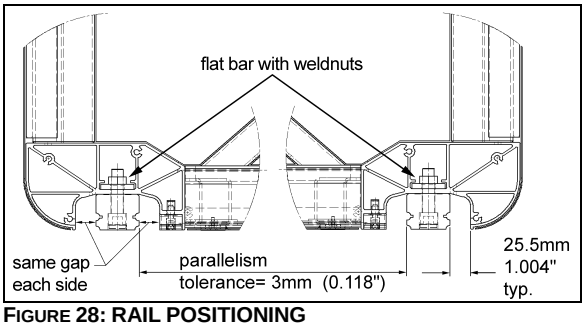

FIGURE 28: RAIL POSITIONING

13 ACETAL PLASTIC BLOCKS

Three different acetal plastic blocks are installed next to each linear bearing to prevent dirt and foreign matter from entering inside the vehicle. They also serve as a support surface for:

1. The inflatable seal each side of the rail.
2. The “in limit” stoppers.

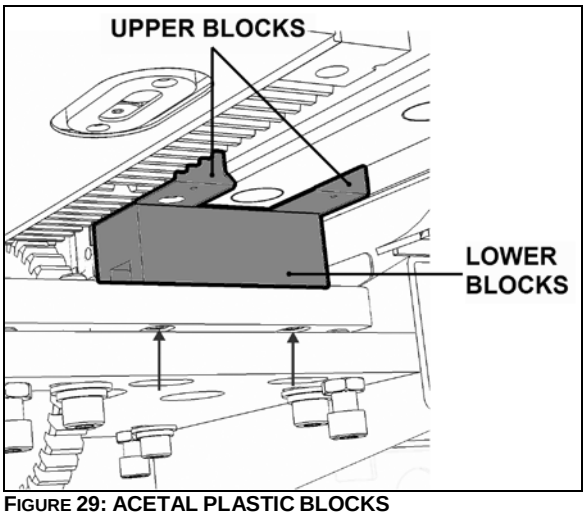

FIGURE 29: ACETAL PLASTIC BLOCKS

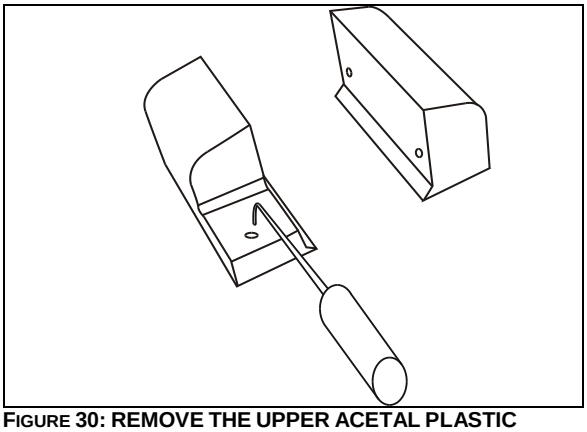

FIGURE 30: REMOVE THE UPPER ACETAL PLASTIC BLOCKS WITH A PICKING TOOL

13.1 REMOVAL / INSTALLATION

1. Gain access to the linear bearing support plate.
2. From under the support plate, remove the acetal plastic block mounting screws (see the oblong holes on Figure 26 and arrows, Figure 29).
3. Remove the 2 upper acetal plastic blocks. They have holes so they can be removed with a picking tool (Figure 30) from outside the vehicle. If the acetal plastic blocks are too hard to reach, slightly extend the slide-out, the movement of the slide-out should bring them out.
4. To remove the lower acetal plastic block, gain access to the compartment under it. Slide the acetal plastic block toward the center of the slide-out. Proceed the same way to reinstall it.

5. Reinstalling the upper acetal plastic blocks. Fold the wiper seal toward the outside with a flat tool to ease installation (Figure 31) and tighten the mounting screws. Leave no gap between the blocks and the rail.

   TORQUE: 6.5-7.5 lb-ft (9-10 Nm)

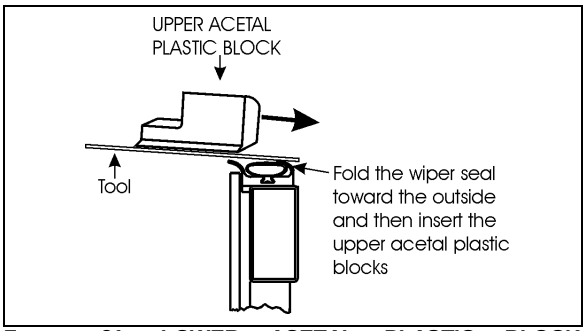

FIGURE 31: LOWER ACETAL PLASTIC BLOCK INSERTION

14 SLIDE-OUT PNEUMATIC SYSTEM

The slide-out is controlled by a pneumatic and electrical system. The pneumatic system consists of electrically controlled valves that operate slide-out components and control safety operations.

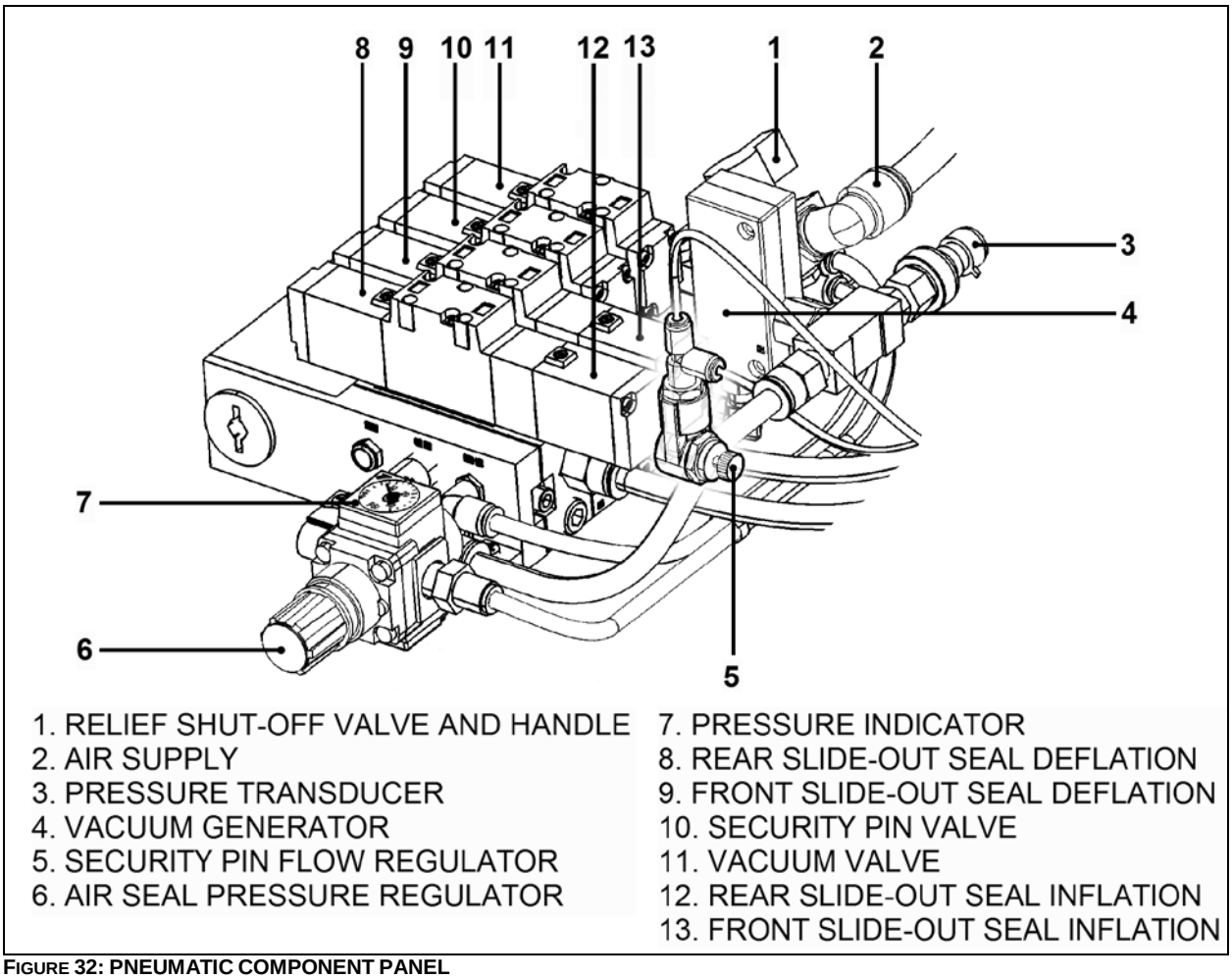

FIGURE 32: PNEUMATIC COMPONENT PANEL

14.1 DESCRIPTION

AIR PRESSURE INLET VALVE

The slide-out air supply comes from the accessory tank.

The supply line for the pneumatic component panel (Item 2, Figure 32) is connected to the air

pressure inlet valve on the pneumatic panel in the front service compartment.

INFLATABLE SEAL VALVE

Seal inflation and deflation is done using a 5-port 2-position manifold valve with two solenoids. One solenoid is used for inflating of the seal and the other for deflating of the seal. When one of the solenoids is activated (seal deflating valve for example), the valve will keep its state even if the solenoid is deactivated. The inflating valve solenoid is activated to re-inflate the seal when the slide-out reaches its inner or outer limit. The inflatable seal pressure is set to between 10-12 psi. In full “IN” or full “OUT” position, this pressure is continuously applied to the seal as long as the accessory air tank (which supplies the slide-out) is not empty.

VACUUM GENERATOR

A vacuum generator using Venturi principle is controlled by a 5-port 2-position manifold valve and is used to evacuate the air faster from the seal and to ensure that the seal surface does not stay in contact with the slide-out.

The vacuum generator valve is activated simultaneously with seal deflating valve solenoid for 10 seconds. A pressure transducer will detect a seal, vacuum valve or generator failure if -5 psig is not reached after the 10 seconds delay. In that situation, an error code will be stored in the DID. In normal operating condition, -5 psig is a necessary condition to consider the seal as deflated.

NOTE
When air pressure is relieved using the shut-off valve, the normal extending and retracting operation cycle is disabled. This is due to the pressure transducer reading 0 psig and that is higher than -5 psig (vacuum). For that reason the slide-out cannot be moved with the control pad.

14.2 MAINTENANCE

COMPRESSED AIR LINE

Inspect all compressed air line tubing for cuts, swelling, kinks or other damage or deterioration. Inspect the pneumatic fittings and components for any leak.

The slide-out air supply comes from the accessory air tank. For maintenance information, refer to Section 12, “Brake and air system”.

INFLATABLE SEAL CIRCUIT

The efficiency of the seal could be affected by impurities, such as white powder in the pneumatic control valve. It is recommended to inspect the inflatable seal control components once a year to prevent malfunction. In this case, remove the seal valves and clean the interior valve components using a compressed air nozzle. Do the same thing with the vacuum generators.

The inflatable seal pressure must be set between 10 to 12 psi maximum. It is recommended to check the inflatable seal pressure once a month to ensure sealing efficiency and prevent any infiltration from outside. The needle on the pressure gage should indicate between the two small green arrows on the dial (Figure 42).

14.3 SEAL

The slide-out sealing device is used to prevent any type of infiltration that may occur between the structure body and the slide-out itself. It is composed of an inflatable seal which is used as a primary sealing device for both retracted and extended slide-out position and a wiper seal as a secondary sealing device which is used to wipe water out and to ensure sealing during slide-out movement.

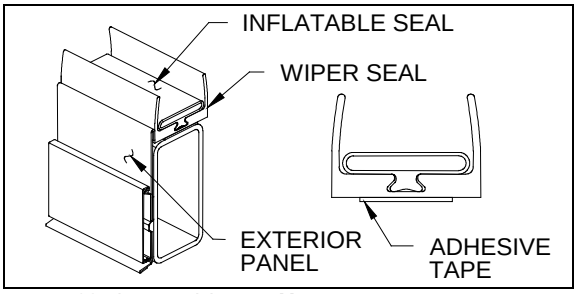

FIGURE 33: SEAL ASSEMBLY

Seal deflation is performed each time the slide-out is moved. The deflating valve solenoid is activated before and during slide-out movement. The deflating solenoid is deactivated upon reaching the retracted or extended position. Then the inflating solenoid is activated to re-inflate the seal.

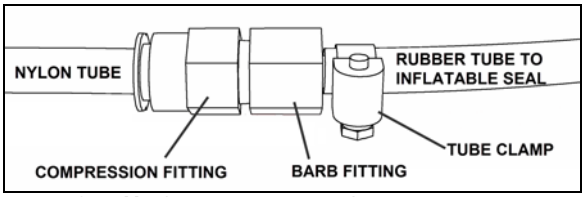

FIGURE 34: TYPICAL INFLATABLE SEAL AIR INLET

CAUTION

Make sure the inflatable seal is deflated when manually moving the slide-out during service maintenance. Deflate inflatable seals completely by turning the relief shut-off valve handle clockwise (see Figure 32).

CAUTION

Check before using any cleaning or adhesive product on seal, panel or glass to prevent alteration or damage.

14.3.1 Maintenance

The inflatable seal pressure must be set between 10 and 12 psi with the pressure regulator. It is recommended to check the inflatable seal pressure once a month to ensure sealing efficiency and prevent any infiltration from outside. Check both seals for air leaks or cracks. Check the sealant between the inflatable seal and the exterior panels and glasses. Add sealant if necessary.

14.3.2 Seal assembly removal

DANGER

Always wear the appropriate safety equipment. Maintain adequate ventilation at all time.

1. Retract the slide-out 2" inside the vehicle (paragraph 14.3.4).

   Heed the cautionary notes before retracting.

2. Unplug the nylon tubing from the compression fitting (Figure 34).
3. Unstick and remove the wiper seal from the structure.
4. Scrape remaining tape from the structure. Remove old sealant that was between the wiper seal and the exterior panels and glasses.

14.3.3 Seal assembly installation

NOTE

This procedure is to install the inflatable seal assembly on the structure.

CAUTION

Always apply product in the same direction to prevent dirt from being brought back.

CAUTION

Check before using any cleaning or adhesive product on seal, panel or glass to prevent alteration or damage.

NOTE

Refer to the product specification for drying time.

1. Retract the slide-out 2" inside the vehicle (paragraph 14.3.4). *Heed the cautionary notes before retracting.*
2. Clean the part of the structure that will receive the inflatable seal and also the back of the exterior panel with a chix cloth and thinner. Use another cloth to dry the surfaces. Wait at least 2 minutes for drying.
3. Rub the structure and also the back of the exterior panel with a Scotch Brite (or equivalent product).
4. Clean another time the structure and the back of the exterior panel with a chix cloth and thinner. Use another cloth to dry the surfaces. Wait at least 2 minutes for drying.
5. Clean the structure and the back of the exterior panel with appropriate cleaner. Wait until the product is dry before proceeding.
6. Seal the gap between the exterior panels and the seal wiper.
7. Install the inflatable seal on the structure, placing it as close as possible from the exterior side of the structure. Position the air inlet first. Then remove locally the inflatable seal adhesive tape protection, and press the upper corners on the structure and hold

them in place for 90 to 120 seconds. Install the lower corners next, then the straight section. Press the straight inflatable seal sections on the structure for at least 15 seconds. Use a small roller to ensure a good adhesive contact on the structure.

8. Connect the nylon tubing back on the fitting. (Figure 34).

14.3.4 Slide-out 2" inside retraction

CAUTION

For each rail, remove all acetal blocks and limit sensors. (Figure 35)

Refer to paragraph 13 “ACETAL PLASTIC BLOCKS”

Do not retract slide-out room too far in. Retract just past the wiper seal. (Figure 37)

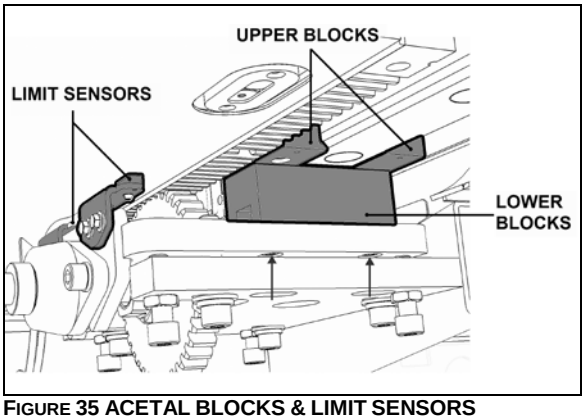

FIGURE 35 ACETAL BLOCKS & LIMIT SENSORS

CAUTION

Do not use the slide-out control pad to move the slide-out inwards. The limits are not recognized over the closed position. The slide-out will not stop and damage may occur.

1. Fully deflate the air seal by turning the shut-off valve clockwise (Item 1, Figure 32). Make sure the pressure indicator is at "0 psi".
2. Turn the ignition to the off position. Using the manual override procedure (Paragraph 18), extend the slide-out a few inches so the exterior extrusion screws located on the top of the slide-out are accessible from outside (Figure 9).
3. Using a knife, cut the sealant between the Top extrusion and the roof. (Figure 36) Unscrew and remove the central exterior extrusion screws and the two end extrusion screws.

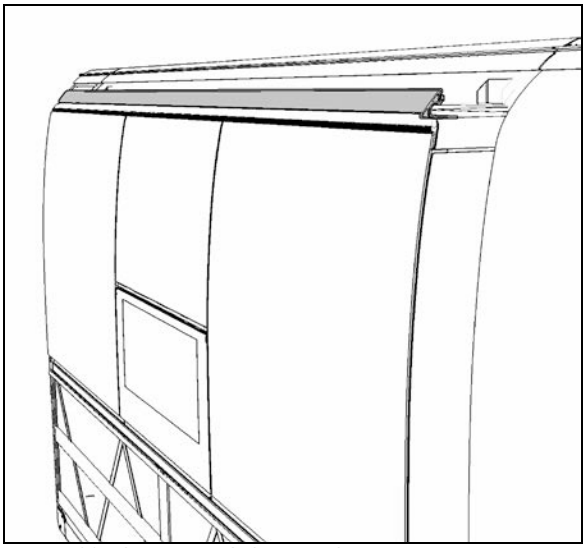

FIGURE 36 TOP EXTRUSION REMOVAL

4. Using the manual override procedure, move the slide-out 2" inside the vehicle, just so the seal becomes accessible from the outside (Figure 37).

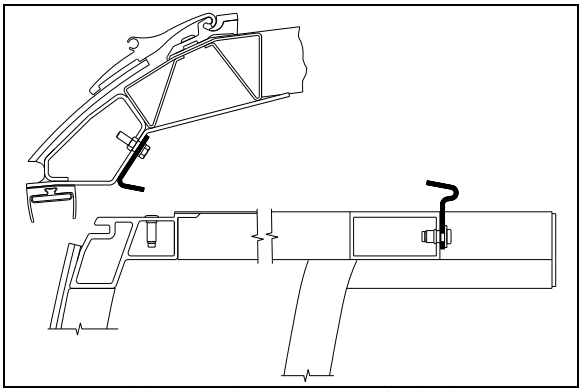

FIGURE 37: ROOM 2" INSIDE – UPPER SECTION VIEW

5. Once completed, use the manual override procedure to extend the slide-out to reinstall the exterior extrusion. Apply appropriate sealant on the exterior extrusion screws and between the extrusion, the roof and the edges to prevent water infiltration (Figure 37).
6. Using the manual override procedure, retract the slide-out to its closed position.
7. Finally, the seal can be re-inflated by turning the shut-off valve handle counterclockwise. Check the pressure gage on the inflatable

seal regulator to see if the pressure is increasing to around 11 psi.

15 SLIDE-OUT ELECTRICAL SYSTEM

DANGER

Never modify the slide-out electrical wiring. Any modifications may cause an unexpected slide-out action and could result in personal injuries.

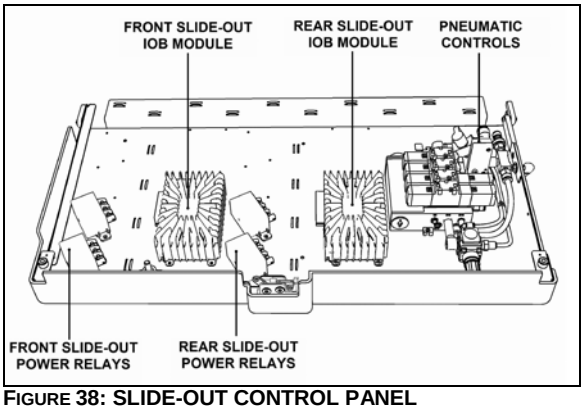

FIGURE 38: SLIDE-OUT CONTROL PANEL

The multiplexed slide-out electrical system is mainly composed of the MCM module, the VEC module and one I/O-B module per installed slide-out.

Each I/O-B has two power relays assigned. I/O-B modules analyze the input signal conditions and activate outputs like pneumatic valves, retraction and extension sequence, etc. The power relays are used to supply power coming from the I/O-B module to the electric motor and to change polarity to reverse motor rotation.

I/O-B modules input signals are:

- Control pad switch IN;
- Control pad switch OUT;

Also, the following input signals are required for a safe operation of the slide-out:

- Pressure transducer;
- Parking brake;
- “in limit” sensor;
- “out limit” sensor;

I/O-B modules output signals are:

- Control pad green indicator light;
- Power relay current reversing;
- Seal valve inflating solenoid;
- Seal valve deflating solenoid;
- Vacuum generator valve solenoid;
- Security pin valve solenoid;
- Electric motor, first power output 15 amps;
- Electric motor, second power output 15 amps;

DANGER

Before working on the slide-out electrical system, turn the ignition key to the “OFF” position.

15.1 ELECTRICAL INTERCONNECTION WITH PREVOST VEHICLE

The slide-out power supply comes from the 24-volt circuit breaker in the rear electrical compartment. The other interconnections are located on the pneumatic panel and the electrical panel in the front service compartment. All the interconnections are shown on the electrical diagrams of your vehicle.

A blinking green light on the control pad means that an error condition or a missing operation condition is present on a slide-out.

15.2 SLIDE-OUT BREAKERS / FUSES

The main breakers for the slide-out electrical system are located in the rear electrical compartment.

For X3-45 VIP models: CB4.

15.2.1 Multiplex fuses

The multiplex module outputs are protected in current by an internal “soft-fuse”. Each output is programmed to specific maximum amperage. When an output is shorted, the current gets above the limit and the soft-fuse intervenes to turn the output OFF. The output stays OFF until the "soft-fuse" is reset.

Turn the ignition key to the OFF position and turn to the ON position again. This resets all "soft-fuses".

CAUTION

Never put grease, Cortec VCI-238 or other product on the multiplex modules connector terminals.

15.3 PROBING VOLTAGE ON THE MULTIPLEX CIRCUITS

Multiplex modules are supplied by 24 volts.

Inactive Multiplex output = Residual voltage of 18% to 33% of supply voltage.
Inactive Multiplex input = Residual voltage of 50% of supply voltage.

NOTE

For a 24V module: an active voltage would be 24V or 0V but not in between. If you measure the intermediate tensions (ex. 12V, 4V, or 8V) this must be interpreted as if the input or the output is inactive.

15.4 MODULE REPLACEMENT

I/O-B modules can be replaced and reprogrammed without having to connect a computer to the vehicle.

Refer to Section 06 under heading “MULTIPLEX MODULES REPLACEMENT” for the detailed procedure.

15.5 SLIDE-OUT LIMIT SENSORS

Two Hall-Effect sensors are used on each slide-out to define end limit positions. The "in limit" and "out limit" sensor detect two pairs of permanent magnets fixed on the slide-out underbody.

15.5.1 Maintenance and adjustment

The rear slide-out sensors are accessible from inside of the vehicle, under the bed structure while the front slide-out sensors can be reached from the 3rd baggage compartment access panel. To remove the sensors, unsnap them from the mounting bracket.

To adjust the "in limit" sensors:
Prior to adjusting the “in limit” sensors, ensure that the “in limit” stoppers are perfectly adjusted (see paragraph 2.2.2).

1. Retract the slide-out to its full “IN” position with the “in limit” stoppers in contact with their bearing surface.
2. Loosen the “in limit” sensor mounting bracket screws and move back the sensor completely (toward the inside of the vehicle).
3. Bring slowly the sensor toward the outside of the vehicle until the LED turns on. When it does, move it 0.079” (2mm) further in the same direction and tighten the mounting bracket screws.
4. Check if the “in limit” sensor is properly adjusted. At the moment when the slide-out stops during normal retraction, the “in limit” stoppers must contact their bearing surface (lower acetal plastic block). Put white grease on the “in limit” stopper beforehand to visually confirm the system stops the motion before hitting the blocks. There should be a grease mark on the block.

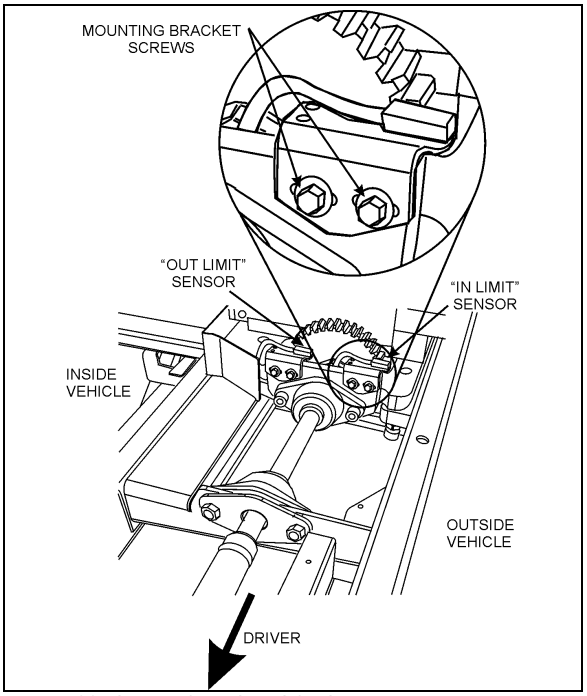

FIGURE 39: SLIDE-OUT SENSORS

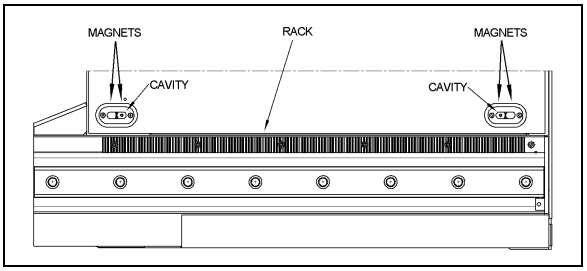

FIGURE 40: MAGNETS ON SLIDE-OUT UNDERBODY

To adjust the "out limit" sensors:

Prior to adjusting the “out limit” sensors, ensure that the inner stoppers are perfectly adjusted (see paragraph 2.1).

1. The slide-out is slightly tilted except when it is in its full “IN” or “OUT” position. Extend the slide-out near its full “OUT” position. When the slide-out straitens up and that it is perpendicular with the vehicle body, stop the slide-out.
2. Loosen the “out limit” sensor mounting bracket screws and move back the sensor completely (toward the inside of the vehicle).
3. Bring slowly the sensor toward the outside of the vehicle until the light emitting diode (LED) turns on. When it does, tighten the mounting bracket screws.

NOTE

When the “out limit” sensors are properly adjusted, the slide-out extension stops before the side inner stoppers reach the vehicle structure.

16 SLIDE-OUT EXTERIOR FINISHING PANELS & WINDOWS

NOTE

The removal and installation procedures are all based on standard service methods described in section 18: BODY. Refer to this manual for procedures, tools, cleaner, adhesives and other product needed.

17 WELDING PRECAUTION

CAUTION

Prior to arc welding on the vehicle, refer to the Welding Precautions Procedure Prior To Welding" in section 00 GENERAL of this manual to avoid serious damage to the vehicle components.

18 SLIDE-OUT MANUAL OVERRIDE PROCEDURES

CAUTION

Never use an impact wrench to manually operate the slide-out. Doing so would damage the various mechanical components of the slide-out.

In case of power retracting system failure, it is possible to use the manual override procedure to retract or extend the slide-out.

The manual override procedures consist in rotating the slide-out motor shaft extension using a cordless power drill with a 3/8" hexagonal bit.

Follow all instructions carefully to avoid damaging the inflatable seal or the retraction mechanism.

18.1 PRELIMINARY CONDITIONS FOR MANUAL OVERRIDE PROCEDURE

Before using the slide-out manual override procedures, make sure that the problem cannot be solved by one of the following simple checks:

- Make sure the circuit breaker is not tripped. See 15.2.
- Make sure the parking brake is applied and that transmission is in the "NEUTRAL" position.

NOTE

The slide-out control system inhibits transmission range selection to prevent the vehicle from moving if the slide-out is not in its full "IN" position.

- Make sure the voltage is high enough by running the engine at fast idle or having a battery charger connected.

CAUTION

Before extending or retracting the slide-out, always open a window to avoid movement restriction and to prevent the motor from stopping in overcurrent because of a vacuum or pressure build up inside the vehicle.

18.1.1 Manual retracting procedure – Front and rear slide-out

1. Turn the ignition switch to the "OFF" position, and remove the ignition key for more safety.
2. Deflate the inflatable seal by using the relieving shut-off valve located on the pneumatic component panel (Item 1, Figure 32).
3. Turn the handle clockwise to deflate the seal. Make sure the pressure indicator reading is "0 psi".

CAUTION

The pressure in the inflatable seal must be completely relieved to prevent any damage to the seal.

NOTE

When air pressure is relieved using the shut-off valve, the normal extending and retracting operation cycle is disabled, for that reason the slide-out cannot be moved using the control pad.

4. To move the slide-out, use a cordless power drill with a 3/8" hexagonal bit on the shaft extension of the slide-out motor.
5. Rotate the slide-out motor shaft extension with the power drill until the slide-out comes to its closed position. (Figure 41)

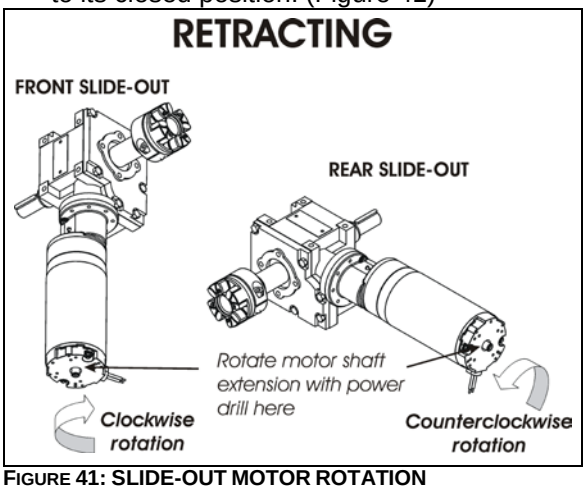

FIGURE 41: SLIDE-OUT MOTOR ROTATION

6. Once the slide-out room is lined up to its closed position, remove the tool from the motor.

CAUTION

Slow down the closing speed as the slide-out approaches its closed position. As soon as the “in limit” stoppers come in contact with their bearing surface, stop immediately the power drill rotating movement. Not doing so could overload the drive mechanism and cause damage to the reduction gearbox.

4. Finally, the inflatable seal can be re-inflated by turning the shut-off valve handle counterclockwise. Check the pressure gage on the inflatable seal regulator to see if the pressure increases to around 11 psi (Figure 42). Needle should be pointing between the two small green arrows on the dial.

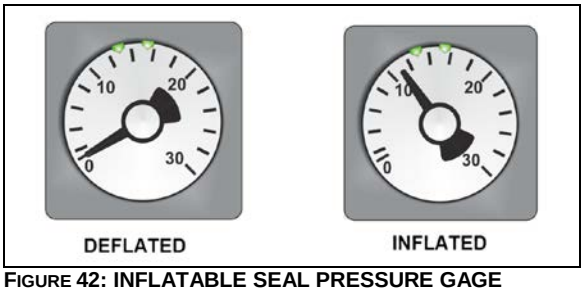

FIGURE 42: INFLATABLE SEAL PRESSURE GAGE

18.1.2 Manual extending procedure – Front and rear slide-out

1. Apply parking brake to disengage the security pin from the receptacle.
2. Turn the ignition switch to the "OFF" position, and remove the ignition key for more safety.
3. Deflate the inflatable seal by using the relieving shut-off valve located on the pneumatic component panel (Figure 32). Turn the handle clockwise to deflate the seal. Make sure the pressure indicator reading is "0 psi".

CAUTION

The pressure in the inflatable seal must be completely relieved to prevent any damage to the seal.

NOTE

When air pressure is relieved using the shut-off valve, the normal extending and retracting operation cycle is disabled, for that reason the slide-out cannot be moved with the control pad.

4. To move the slide-out, use a cordless power drill with a 3/8" hexagonal bit on the shaft extension of the slide-out motor.
5. Rotate the slide-out motor shaft extension with the power drill until the slide-out comes to its opened position.
6. Once the slide-out is lined up to its opened position, remove the tool from the motor.

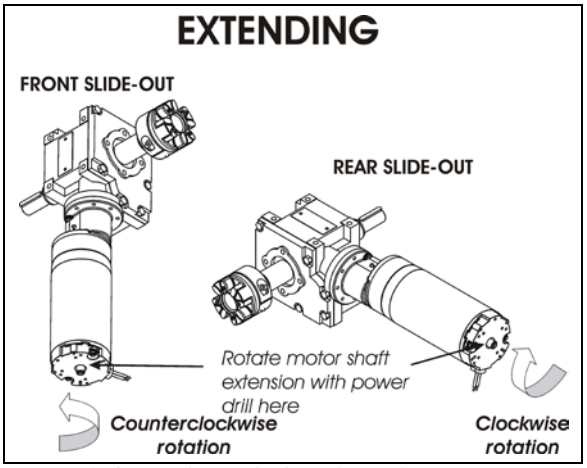

FIGURE 43: SLIDE-OUT MOTOR ROTATION

NOTE

*The **front slide-out motor** is located inside the 2nd baggage compartment while the **rear slide-out motor** is accessible from inside the vehicle, under the bed structure.*

CAUTION

Slow down on the closing speed as the slide-out approaches its extended position. As soon as the “out limit” stoppers come in contact with their bearing surface, stop immediately the power drill rotating movement. Not doing so could overload the drive mechanism and cause damage to the reduction gearbox.

7. Finally, the inflatable seal can be re-inflated by turning the shut-off valve handle counterclockwise. Check the pressure gage on the inflatable seal regulator to see if the pressure is increasing to 11 psi (Figure 42).

19 SLIDE-OUT MAXIMUM LOAD

Front slide-out:
Maximum load with vehicle at stand still (retracted or extended) ……1500 lb
Maximum load with vehicle moving or slide-out moving ……...1200 lb[1]

Rear slide-out:
Maximum load with vehicle at stand still (retracted or extended) …..1500 lb
Maximum load with vehicle moving or slide-out moving …….1000 lb [1]

NOTE

Maximum load includes occupant weight and equipment added by the converters in the slide-out

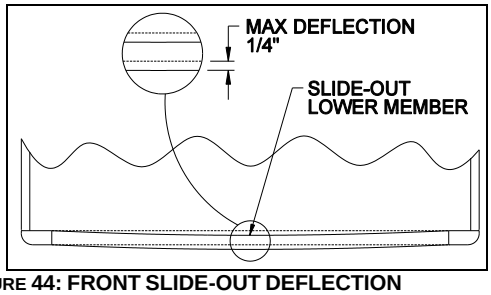

FIGURE 44: FRONT SLIDE-OUT DEFLECTION

[1] Value is for an equally distributed load. To prevent seal damage by excessive deflection.

CAUTION

Never remove the structural reinforcement angle brackets inside the baggage compartments. Doing so could lead to termination of the warranty coverage concerning the structural integrity.

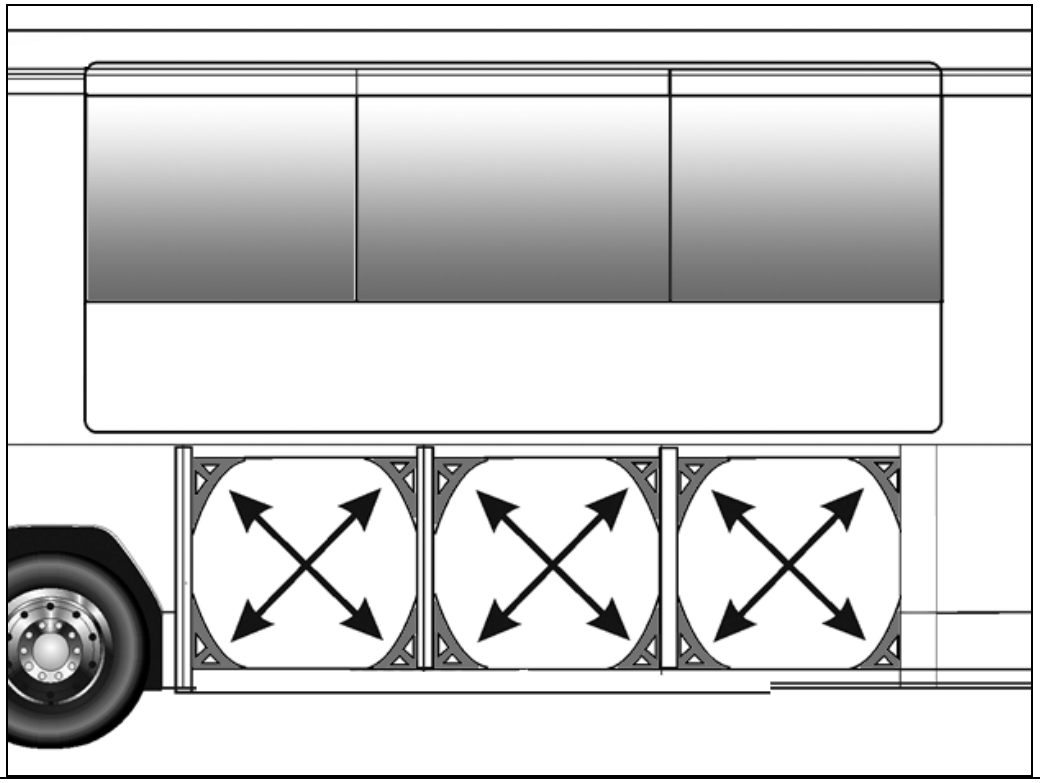

20 CONVERSION CHECKLIST

The converter should check these points before closing the walls covering the roof reinforcing rod and the pinions:

1. Check that the front slide-out exterior panels are parallel with the vehicle panels when retracted. If not, readjust the tilt.
2. Check that the slide-out is straight when completely extended, and that it leans against all inner stoppers.
3. Make sure the vehicle upper member is parallel with the front slide-out structure. If not, readjust the roof reinforcing rod. This may be affected by the loading on the roof.
4. Slide-out lower member deflection should be within 1/4". If not, redistribute the load.
5. Check slide-out operation. The slide-out should retract and extend smoothly without vibration.

Final check:

- Make sure the slide-out air pressure inlet valve is completely opened.
- Check the inflatable seal air pressure on the pressure regulator. The pressure should be 11 psi.

21 TROUBLESHOOTING

21.1 ERROR CONDITION OR MISSING OPERATION CONDITION

When an error condition or a missing operation condition is present on a slide-out, the green indicator light on the corresponding control pad starts blinking upon releasing of the IN/OUT rocker switch.
Turning the ignition OFF and ON again, will stop the blinking and reset the fault. If the error condition or a missing operation condition is still present, the blinking will start again the next time that the slide-out is operated.
To initiate fault diagnostic, use the DID right after operating the slide-out without cycling the ignition switch.

NOTE
The DID is the main tool for troubleshooting a multiplex vehicle. It is essential to have it in working condition.

Fault diagnostic

To get detailed information about the error condition or the missing operation condition, request a diagnostic using the dashboard Driver's Info Display (DID). Check if there are active errors in the slide-out electrical system. With the DIAGNOSTICS menu, highlight VIEW ACTIVE FAULTS and then highlight ELECTRICAL SYSTEM to request a diagnostic of the electrical system from the MCM.

Press the enter key. If applicable, the DID shows the device ID, the fault messages or fault codes recorded. When more than one fault is recorded, an arrow pointing down appears on the right of the display. Use the down arrow to see all the fault messages.

Once the problem is corrected, the DID will still shows the fault as being active. Leave VIEW ACTIVE FAULTS up to the main menu. Then return to DIAGNOSTICS, VIEW ACTIVE FAULTS, and then ELECTRICAL SYSTEM. The DID should not display any faults

21.2 TROUBLESHOOTING – OPERATING CONDITIONS & CONTROL

PROBLEM	CAUSE	CORRECTIVE ACTION
The slide-out functions normally but the control pad green indicator light blinks	Something is defective and may eventually create an issue if not repaired. The problem may be: A. Faulty limit sensor causing the slide-out to stop in overcurrent; B. CAN network problem causing the transmission inhibit safety to be non-operational; C. Vacuum pressure transducer disconnected or damaged (vacuum is applied for a fixed time of 7 seconds); D. Seal inflating valve solenoid open circuit (the seal is not re-inflated and water can penetrate in the vehicle); E. Security pin valve solenoid open circuit (the security pin is not extended while vehicle is riding).	Request a diagnostic from the electrical system using the DID DIAGNOSTICS menu and refer to the Fault Message list in paragraph 21.4.

PROBLEM	CAUSE	CORRECTIVE ACTION
The slide-out does not extend	A. The parking brake is not seen by the controller as being applied; B. Not enough air pressure in the accessory air tank to permit proper operation of the vacuum generator; C. Faulty vacuum generator, connection to the vacuum generator open, seal deflating valve solenoid open circuit; D. I/O-B module output defective, regulated 5-volt supply to sensors shorted to ground, “out limit” sensor shorted to ground, connection to the motor negative relay solenoid open circuit;	A. Make sure the parking brake is applied. Confirm parking brake application with the parking brake light on the telltale panel. B. Run the engine at fast idle a few minutes to increase air pressure in the accessory air tank and try again. C. Turn the relieving shut-off valve handle clockwise to deflate the inflatable seal, disconnect the pressure transducer. Do not forget to reconnect the pressure transducer and to close the relieving shut-off valve. Failure to do so could damage the seal and lead to water infiltration; D. Operate the slide-out with the manual override procedures.
The slide-out does not retract	A. Not enough air pressure in the accessory air tank to permit proper operation of the vacuum generator; B. Faulty vacuum generator, connection to the vacuum generator open, seal deflating valve solenoid open circuit; C. I/O-B module output defective, “in limit” sensor shorted to ground, connection to the motor positive relay solenoid open circuit;	A. Run the engine at fast idle a few minutes to increase air pressure in the accessory air tank and try again. B. Turn the relieving shut-off valve handle clockwise to deflate the inflatable seal, disconnect the pressure transducer. CAUTION, do not forget to reconnect the pressure transducer and to close the relieving shut-off valve. Failure to do so could damage the seal and lead to water infiltration; C. Operate the slide-out with the manual override procedures.
When extending, the slide-out stops after having extended by 1 inch	A. The security pin valve solenoid circuit is shorted to (+) 24-volt and the pin remains engaged;	A. Disconnect air supply from the safety pin cylinder;
Transmission DRIVE range or REVERSE cannot be selected (the slide-out telltale light is illuminating).	A. Slide-out not in full "in" position; B. Faulty “in limit” sensor. The slide-out is retracted but the controller doesn’t not see it as retracted.	A. Retract slide-out. B. Confirm that all slide-out are retracted. On the slide-out control panel, disconnect the 5 pins green connector on the I/O-B module to disable the transmission inhibit. CAUTION, this is a temporary measure, the vehicle must be serviced as soon as possible.

21.3 TROUBLESHOOTING - MECHANICAL COMPONENTS

PROBLEM	CAUSE	CORRECTIVE ACTION
Slide-out does not retract or extend when depressing the control switch.	A. Electrical motor failure; B. Speed reduction gearbox failure; C. Security pin still engaged in receptacle;	A. Replace motor. B. Inspect gearbox components, particularly: bronze wheel or first reduction stage output shaft. Replace damaged components. C. Disengage pin and check if air cylinder is damaged.
Slide-out is not straight once retracted or during retracting or extending operation.	A. Broken rack tooth; B. Faulty rack attachment; C. Faulty shaft key at speed reduction gearbox or jaw coupling; D. Pinion keyless bushing slipping; E. Shaft breaking; F. Flange bearing attachment loosen;	A. Replace rack. B. Tighten mounting bolts, apply proper torque and use Loctite threadlocker (replace rack if necessary). C. Replace key or component having a damaged keyway. D. Realign slide-out and apply proper torque to keyless bushing. E. Replace shaft. F. Reposition shaft and tighten flange bearing mounting bolts.
Slide-out moves out slightly when vehicle is traveling.	A. Lower "in limit" stoppers are not leaning against the structure at the moment when the "in limit" sensor detects the magnet;	A. Adjust the sensor position in order to have contact of the stoppers against the structure at the time when the system stops the slide-out retraction.
Slide-out moves when vehicle is moving.	A. Inflatable seal not inflated	A. Check seal condition and seal air supply system.
Slide-out retracts or extends difficultly.	A. Foreign matters accumulated in the linear bearing;	A. Inspect the linear bearing end seals to see if they are in good condition. If not, replace the end seals and clean the inside of linear bearing.
Slide-out oscillates vertically when retracting or extending	A. Linear bearing balls hardened due to a too heavy load; B. Linear bearing mounting bolts loosen;	A. If balls clearance is excessive, replace linear bearing. B. Tighten mounting bolts.
Slide-out vibrating or noisy when extending or retracting	A. Acetal plastic block rubbing against the slide-out structure; B. Worn-out anti-friction coating on wiper seal around slide-out; C. Lower acetal plastic block rubbing against rail;	A. Realign acetal plastic block. B. Replace wiper seal. C. Remove lower acetal plastic block and machine down 1mm (0.039").

PROBLEM	CAUSE	CORRECTIVE ACTION
Top of slide-out moves sideways when vehicle is moving	A. Roof reinforcing rod misadjusted;	A. Readjust as per procedure.
Slide-out does not retract up to its full "in" position	A. Interference between the exterior extrusion and the vehicle upper horizontal member above the slide-out;	A. Check for straightness of horizontal member and adjust the roof reinforcing rod. B. Check for outer wiper seal lip straightness on the slide-out roof.
Bottom of slide-out not flush with vehicle body	A. Broken or misadjusted lower "in limit" stopper; B. Lower "in limit" stoppers are not leaning against the structure at the moment when the "in limit" sensor detects the magnet; C. Acetal plastic block serving as leaning surface for lower "in limit" stopper broken or moved;	A. Replace or adjust lower "in limit" stopper. B. Adjust the sensor position in order to have contact of the stoppers against the structure when slide-out is stopped. C. Replace or adjust acetal plastic block proper position.
Top of slide-out not flush with vehicle body	A. Broken or misadjusted leveling or retaining screw; B. Faulty upper “in limit" stopper;	A. Check and replace screw. B. Replace upper “in limit" stopper.
Lower edge of slide-out not parallel with vehicle body opening	A. Faulty leveling and retaining screw (8 screws each side).	A. Inspect screw, replace and adjust slide-out level.
Watertightness problem	A. Inflatable seal and/or wiper seal damaged or unstuck; B. Insufficient air pressure in the seal; C. No air pressure in the slide-out pneumatic system; D. Sealant missing; E. Wiper seal draining hole clogged; F. Faulty water recovery pan; G. Faulty internal gutter;	A. Check both seals condition. B. Check the pressure regulator, the relieving shut-off valve and the seal valve condition. C. Check the slide-out air pressure inlet valve condition and the accessory air tank pressure. D. Check the exterior extrusion screws, the windows and the exterior panels sealant condition. E. Unclog draining hole. F. Check the recovery pan. G. Check internal gutter.
Knocking sound at end of travel when extending slide-out	A. Inner stoppers misadjusted;	A. Readjust the inner stoppers.

PROBLEM	CAUSE	CORRECTIVE ACTION
Knocking sound when parking brake is released	A. Security pin retracts too rapidly;	A. Adjust security pin air flow regulator.
Inflatable seal damaged or removed, or wiper seal unstuck from the structure.	A. Slide-out has been retracted or extended with the manual procedure with the inflatable seal not deflated; B. Pressure transducer malfunction; C. Faulty roof reinforcing rod adjustment; D. Seal valve malfunction; E. Excessive load in the slide-out; F. Slide-out not centered in the structure opening;	A. Always deflate the seal when manually retracting or extending the slide-out. B. Check the pressure transducer condition, replace if necessary. C. Readjust the roof reinforcing rod. D. Check the seal valve condition. E. Reduce load or distribute load evenly in order to respect the deflection criterion and slide-out load capacity. F. Readjust the slide-out height and center horizontally in opening.
Friction at end of travel when in full OUT position or at beginning of retraction	A. Interference between upper structure key and upper inner stopper;	A. Readjust the upper inner stopper.

21.4 SLIDE-OUT FAULT MESSAGE ON DID

SID #	FAULT MESSAGE	TEXT	PROBABLE CAUSE	CORRECTIVE ACTION
1	Voltage Module A56	Value Too Low	Module A56 sees a Voltage less than 18 V on its power supply connector. Breaker, fuse or wiring harness open.	Check/ reset circuit breaker CBSo and CBSo1. Check/ replace fuse FSo5 Fix wiring harness
2	No Response Mod A56	Data Error	MCM module does not receive CAN communication from module A56. CAN connector A56 J3 Disconnected or CAN wiring harness open, or module A56 is defective.	Check connection A56 J3 Fix CAN wiring harness Replace module A56
3	Voltage Module A57	Value Too Low	Module A57 sees a voltage less than 18 V on its power supply connector. Breaker, fuse or wiring harness open.	Check/ reset circuit breaker CBSo and CBSo2. Check/ replace fuse FSo2 Fix wiring harness
4	No Response Mod A57	Data Error	MCM module does not receive CAN communication from module A57. CAN connector A57 J3 disconnected or CAN wiring harness open or module A57 is defective.	Check connection A57 J3 Fix CAN wiring harness Replace module
5	SldO Vacuum Sensor	Open Circuit	Pressure transducer disconnected. Faulty pressure transducer. Connection or wiring harness open.	Check/ replace vacuum transducer Check/ reconnect the connector SESo1 Fix wiring harness
		Shorted High	Pressure transducer is faulty Wiring harness shorted to 12v or 24v	Check/ replace vacuum transducer Fix wiring harness
6	SldO Seal Deaf Vac	Mechanical Fault	Does not reach vacuum level (-5 PSIG). Slide-out seal damaged or air leak in the seal deflating pneumatic circuit.	Check the seals and the pneumatic circuit.
7	SldO Motor/Limit se	Mechanical Or Electrical Fault	Slide-Out motor is activated for more than 5 seconds and the limit sensor from the departing end is still seen as active. Either the motor is defective and the slide-out is not moving or the limit sensor from the departing end is broken active.	If the slide-Out is not moving, then check the motor and its wiring. If the slide-out is moving, then check the limit sensor from the departing end. (If problem occurs when extending, check the in-limit sensor. If the problem occurred when retracting, then check the out-limit sensor).

SID #	FAULT MESSAGE	TEXT	PROBABLE CAUSE	CORRECTIVE ACTION
8	SldO Park Br Signal	Mechanical Or Electrical Fault	Parking brake is not applied. Wire between parking brake switch and MCM is open.	Make sure the parking brake is applied and the parking brake telltale illuminates. Check / replace parking brake switch. Fix wiring harness.
		Shorted High	Wire between parking brake switch and MCM is shorted to 12v or 24v.	Fix wiring harness.
9	SldO Mot SpeedA Ctr	Shorted High	Wiring harness shorted to 12v or 24v	Fix wiring harness
		Current Above normal	Security pin or object stop the movement of a slide-out	Check / fix security pin functionality. Check / remove any object around the slide-out.
10	SldO Mot SpeedB Ctr	Shorted High	Wiring harness shorted to 12v or 24v	Fix wiring harness
		Current Above normal	Security pin or object stop the movement of a slide-out	Check / fix security pin functionality. Check / remove any object around the slide-out.
11	SldO Remote Led	Shorted High	LED or wiring harness shorted to 12v or 24v	Fix LED or wiring harness
		Shorted Low	Led or wiring harness shorted to ground	Fix LED or wiring harness
		Open Circuit	LED is broken. Bad connection on control pad. Wiring harness is cut.	Check / fix remote LED or connection Check /fix wiring harness
		Current Above normal	Led or wiring harness shorted to 12v or 24v	Fix Led or wiring harness
12	SldO Seal Inf Sol	Shorted High	Solenoid or wiring harness shorted to 12v or 24v	Fix solenoid or wiring harness
		Shorted Low	Solenoid or wiring harness shorted to ground	Fix solenoid or wiring harness
		Open Circuit	Solenoid is broken or open. Bad connection on solenoid or bloc valve. Wiring harness is cut.	Check / fix solenoid or connection Check /fix wiring harness
		Current Above normal	Solenoid or wiring harness shorted to 12v or 24v	Fix solenoid or wiring harness
13	SldO Seal Def Sol	Shorted High	Solenoid or wiring harness shorted to 12v or 24v	Fix solenoid or wiring harness
		Shorted Low	Solenoid or wiring harness shorted to ground	Fix solenoid or wiring harness
		Open Circuit	Solenoid is broken or open. Bad connection on solenoid or bloc valve. Wiring harness is cut.	Check / fix solenoid or connection. Check /fix wiring harness
		Current Above normal	Solenoid or wiring harness shorted to 12v or 24v	Fix solenoid or wiring harness
14	SldO Vacc Gen Sol	Shorted High	Solenoid or wiring harness shorted to 12v or 24v	Fix solenoid or wiring harness
		Shorted Low	Solenoid or wiring harness Shorted to ground	Fix solenoid or wiring harness
		Open Circuit	Solenoid is broken or open. Bad connection on solenoid or bloc valve. Wiring harness is cut.	Check / fix solenoid or connection Check / fix wiring harness

SID #	FAULT MESSAGE	TEXT	PROBABLE CAUSE	CORRECTIVE ACTION
		Current Above normal	Solenoid or wiring harness shorted to 12v or 24v	Fix Solenoid or wiring harness
15	SldO Mot Neg Rly	Shorted High	Relay coil or wiring harness shorted to 12v or 24v	Fix relay coil or wiring harness
		Shorted Low	Relay coil or wiring harness shorted to ground	Fix relay coil or wiring harness
		Open Circuit	Relay coil is broken or open. Bad connection on relay. Wiring harness is cut.	Check / fix relay coil or connection Check / fix wiring harness
		Current Above normal	Relay coil or wiring harness shorted to 12v or 24v	Fix relay coil or wiring harness
16	SldO Mot Pos Rly	Shorted High	Relay coil or wiring harness shorted to 12v or 24v	Fix relay coil or wiring harness
		Shorted Low	Relay coil or wiring harness shorted to ground	Fix relay coil or wiring harness
		Open Circuit	Relay coil is broken or open. Bad connection on relay. Wiring harness is cut.	Check / fix relay coil or connection Check / fix wiring harness
		Current Above normal	Relay coil or wiring harness shorted to 12v or 24v	Fix relay coil or wiring harness
17	SldO Open Sw	Shorted High	Switch or wiring harness shorted to 12v or 24v	Fix switch or wiring harness
18	SldO Close Sw	Shorted High	Switch or wiring harness shorted to 12v or 24v	Fix switch or wiring harness
19	SldO Limit In Se	Shorted High	Sensor or wiring harness shorted to 12v or 24v	Fix sensor or wiring harness
20	SldO Limit Out Se	Shorted High	Sensor or wiring harness shorted to 12v or 24v	Fix sensor or wiring harness
21	SldO Secu Pin Sol	Shorted High	Solenoid or wiring harness shorted to 12v or 24v	Fix solenoid or wiring harness
		Shorted Low	Solenoid or wiring Harness shorted to ground	Fix solenoid or wiring harness
		Open Circuit	Solenoid is broken or open. Bad connection on solenoid or bloc valve. Wiring harness is cut.	Check / fix solenoid or connection. Check / fix wiring harness
		Current Above normal	Solenoid or wiring harness shorted to 12v or 24v	Fix solenoid or wiring harness
22	SldO Limit In Out	Mechanical Or Electrical Fault	In Limit and Out Limit are seen at the same time. In Limit or Out Limit problem.	Check / replace in limit or out limit sensors Fix wiring harness.
23	Limit Sensor 5 V supply	Shorted Low	5v IO-B output is less than 2v. Wiring harness is open or shorted to ground.	Check 5v output on IO-B / replace IO-B module. Fix wiring harness.