H3-45

REV.	DATE	O.C.	EFF.	DESCRIPTION	PAGE(S)	BY	CHECKED	APPROVED
0	2022/10/09	2018032	R-1453	P9660	All	S.B.	G.P	G.P
1	2022/10/27	NA	NA	UPDATE	A , 0 , 30.3, 31.2	S.C.	E.O	E.O
2	2022/12/01	2021102	R-1498	SPEAKERS VISATON	0,35.6	S.C.	G.P.	G.P.
3	2023/01/24	NA	NA	UPDATE	0,26.5,	S.B.	E.O	E.O
				UPDATE	1.2, 2.1, 2.2, 3.2, 6.1,6.2, 6.3, 7.1, 9.1, 10.1, 17.1,26.1, 29.1, 38.1	P.G	E.O	E.O
3-5	2023-03-20	2018032		Resistor added to Front Flasher and Low Beam and Update	0, 26.1, 34.1	P.G.	EO	EO
4	2023-03-28	2022123		New Fan Condenser SPAL an update	0, 3.1, 4.2, 5.1, 8.1, 18.2, 19.1, 23.1, 26.1, 37.1, 39.1	P.G.	EO	EO
5	2023-09-01	NA		Modification to heated Mirror	0, 4.2, 31.1	P.G.	EO	EO
6	2023-12-15	2022123		New Fan Condenser SPAL and update	0,5.1,3.1,23.1,26.6,14.1,18.2, A,C1,L,F,10.1	S.B.	EO	EO
7	2023-04-04	2023053		New Pre-heater L3 hydronics	0,5.1,17.1,L,G,C1,3.1,3.2	A.S	E.O	E.O
				update	A	A.S	E.O	E.O
8	2024-10-02	2022123		New Fan Condenser SPAL	0,5.1,18.3	A.S	E.O	E.O
				update	4.1,38.1	A.S	E.O	E.O
				update	40.1	S.C.	E.O	E.O

PREVOST	WIRING DIAGRAM	DWG NO.: D062140 p0.1	REV.: 11

H3-45

REV.	DATE	O.C.	EFF.	DESCRIPTION	PAGE(S)	BY	CHECKED	APPROVED
09	2024-12-11	2024096	S-2413	MCM2 Prelim:2352	0.2, 3.2, 4.2, 6.1, 6.2, 7.1, 9.1 15.1, 26.1, 29.1, 38.1	P.G.	A.B.	A.B.
10	2024-12-11	2024096	S-2413	MCM2	0.2, A, C1, E, F, G, H, J, K, L	P.G.	A.B.	A.B.
11	2024-12-11	2024096	S-2413	MCM2	0.2, B1, B2	P.G.	A.B.	A.B.

Wiring diagram pages list

Wiring diagram	pages						
Multiplex outputs list	**B1**	Destination sign	28.2	**I**		**S**	
Multiplex inputs list	**B2**	Digital clock	28.1	Indirect lighting	23.1	Sound system	35.6 - 35.8
Multiplex error messages	**B3**	Driver's light & backlight	19.1	Ignition	3.2	Sound sys.-Speakers	35.2
Layout vehicule - harness	**C1**	Driver Seat	30.3	ISM Parcel Rack	5.2	Sound sys.-Video dist.	35.3
Sound system	**C2**	Driver window	30.1			Sound sys.-Seat audio	35.7
Pins configuration	**D**	**E**		**K**		Spares wires	8.1
Circuits list	**E**	ELD Gateway	42.4	Kneeling system	32.1	Stop lights	26.2
Circuit breakers list	**F**	Emergency Lights	45			Steering control ZF	37.2
Connectors list	**G**	EMirror	31.2	**L**		Step lights	29.1
Diodes list	**H**	Engine ECU	14.1	Lavatory	11.1	Strip Lighting	21.1
Resistors list	**J**	Engine heater	14.1	Line Departure Warning	16.2	Sun visor	41.1
Relays list	**K**	Engine start	3.2	Low buoy	32.1		
Fuses list	**L**	Engine & RJB cmpt. Light	25.1	Luggage door lock/unlock	33.1	**T**	
Wire identification chart	**M**	Entrance door & lights	29.1			Tag	32.1
		ESP	16.1	**M**		Tail & licence lights	26.2
A				Main dist. ignition & batt.	3.1	Tire pressure monitor	39.1
ACB	39.1	**F**		Markers lights	26.1 - 26.2	Trailer package	26.4
Air dryer	37.1	Fast idle	14.1	Mirrors	31.1	Trailer park brake	12.2
Alternators	1.1	Fans radiator	13.1	Multiplex power distribution	7.1	Transmission ECU	15.1-15.2
Alternators Remy	1.2	Fire alarm	38.1	Multiplex network	6.1 - 6.2		
Aisle Lights	20.1	Fire suppression system	38.1			**U**	
		Flashers	26.1-26.2	**P**		Urea system	14.2
B		Fog lights	26.5	Parcel rack A/C system	18.3		
Back-up camera	28.1	Forward Collision Warning	16.2	Park brake sensor	12.1	**V**	
Back-up warnings	26.3	Fuel gauge	10.1	Park brake trailer sensor	12.2	Volvo link TGW	37.1
Batteries & Equalizer	1.1			Power distribution FJB 12V	4.1		
Brake pedal sensor	12.1	**G**		Power distribution FJB 24V	4.2	**W**	
		Grounds electronic	2.1	Pwr dist. RJB 12V & 24V	5.1	Wall Led Strips	24.1
C		Grounds chassis	2.2	Power outlets 12V	30.2	Water pre-heater	17.1
Camera	44			Power outlets 120VAC	40.1	Wheel chair lift Ricon	36.1
Clearance lights	26.1-26.2	**H**				WIFI	35.9
Cluster	10.1	Hazard	26.1	**R**		Windows ajar	27.1
Cornering lights	26.5	Head lights	26.1	Reading lamps	22.2	Wipers & washer	34.1
Cruise Control	16.2	Horn	9.1	Retarder	12.1 - 15.1		
		Hostess chime	22.1	Roof Hatches With Fan	18.5		
D		Hvac defroster	18.1				
Dash lights	19.1	Hvac passenger	18.2				

Wiring diagram pages list

Wiring diagram	pages						
Multiplex outputs list	**B1**	Destination sign	28.2	**I**		**S**	
Multiplex inputs list	**B2**	Digital clock	28.1	Indirect lighting	23.1	Sound system	35.6 - 35.8
Multiplex error messages	**B3**	Driver's light & backlight	19.1	Ignition	3.2	Sound sys.-Speakers	35.2
Layout vehicule - harness	**C1**	Driver Seat	30.3	ISM Parcel Rack	5.2	Sound sys.-Video dist.	35.3
Sound system	**C2**	Driver window	30.1			Sound sys.-Seat audio	35.7
Pins configuration	**D**	**E**		**K**		Spares wires	8.1
Circuits list	**E**	ELD Gateway	42.4	Kneeling system	32.1	Stop lights	26.2
Circuit breakers list	**F**	Emergency Lights	45			Steering control ZF	37.2
Connectors list	**G**	Emirror	31.2	**L**		Step lights	29.1
Diodes list	**H**	Engine ECU	14.1	Lavatory	11.1	Strip Lighting	21.1
Resistors list	**J**	Engine heater	14.1	Line Departure Warning	16.2	Sun visor	41.1
Relays list	**K**	Engine start	3.2	Low buoy	32.1		
Fuses list	**L**	Engine & RJB cmpt. Light	25.1	Luggage door lock/unlock	33.1	**T**	
Wire identification chart	**M**	Entrance door & lights	29.1			Tag	32.1
		Entrance Step lights	29.2	**M**		Tail & licence lights	26.2
A		ESP	16.1	Main dist. ignition & batt.	3.1	Tire pressure monitor	39.1
ACB	39.1	**F**		Markers lights	26.1 - 26.2	Trailer package	26.4
Air dryer	37.1	Fast idle	14.1	Mirrors	31.1	Trailer park brake	12.2
Alternators	1.1	Fans radiator	13.1	Multiplex power distribution	7.1	Transmission ECU	15.1-15.2
Alternators Remy	1.2	Fire alarm	38.1	Multiplex network	6.1 - 6.2		
Aisle Lights	20.1	Fire suppression system	38.1			**U**	
		Flashers	26.1-26.2	**P**		Urea system	14.2
B		Fog lights	26.5	Parcel rack A/C system	18.3		
Back-up camera	28.1	Forward Collision Warning	16.2	Park brake sensor	12.1	**V**	
Back-up warnings	26.3	Fuel gauge	10.1	Park brake trailer sensor	12.2	Volvo link TGW	37.1
Batteries & Equalizer	1.1			Power distribution FJB 12V	4.1		
Brake pedal sensor	12.1	**G**		Power distribution FJB 24V	4.2	**W**	
		Grounds electronic	2.1	Pwr dist. RJB 12V & 24V	5.1	Wall Led Strips	24.1
C		Grounds chassis	2.2	Power outlets 12V	30.2	Water pre-heater	17.1
Camera	44			Power outlets 120VAC	40.1	Wheel chair lift Ricon	36.1
Clearance lights	26.1-26.2	**H**				WIFI	35.9
Cluster	10.1	Hazard	26.1	**R**		Windows ajar	27.1
Cornering lights	26.5	Head lights	26.1	Reading lamps	22.1	Wipers & washer	34.1
Cruise Control	16.2	Horn	9.1	Retarder	12.1 - 15.1		
		Hostess chime	22.2	Roof Hatches With Fan	18.5		
D		Hvac defroster	18.1				
Dash lights	19.1	Hvac passenger	18.2				

Wiring diagram pages list

Wiring diagram	pages						
Multiplex outputs list	**B1**	Destination sign	28.2	**I**		**S**	
Multiplex inputs list	**B2**	Digital clock	28.1	Indirect lighting	23.1	Sound system	35.6 - 35.7
Multiplex error messages	**B3**	Driver's light & backlight	19.1	Ignition	3.2	Sound sys.-Speakers	35.2
Layout vehicule - harness	**C1**	Driver Seat	30.3	ISM Parcel Rack	5.2	Sound sys.-Video dist.	35.3
Sound system	**C2**	Driver window	30.1			Sound sys.-Seat audio	35.7
Pins configuration	**D**	**E**		**K**		Spares wires	8.1
Circuits list	**E**	ELD Gateway	42.4	Kneeling system	32.1	Stop lights	26.2
Circuit breakers list	**F**	Emergency Lights	45			Steering control ZF	37.2
Connectors list	**G**	Emirror	31.2	**L**		Step lights	29.1
Diodes list	**H**	Engine ECU	14.1	Lavatory	11.1	Strip Lighting	21.1
Resistors list	**J**	Engine heater	14.1	Line Departure Warning	16.2	Sun visor	41.1
Relays list	**K**	Engine start	3.2	Low buoy	32.1		
Fuses list	**L**	Engine & RJB cmpt. Light	25.1	Luggage door lock/unlock	33.1	**T**	
Wire identification chart	**M**	Entrance door & lights	29.1			Tag	32.1
		Entrance Step lights	29.2	**M**		Tail & licence lights	26.2
A		ESP	16.1	Main dist. ignition & batt.	3.1	Tire pressure monitor	39.1
ACB	39.1	**F**		Markers lights	26.1 - 26.2	Trailer package	26.4
Air dryer	37.1	Fast idle	14.1	Mirrors	31.1	Trailer park brake	12.2
Alternators	1.1	Fans radiator	13.1	Multiplex power distribution	7.1	Transmission ECU	15.1-15.2
Alternators Remy	1.2	Fire alarm	38.1	Multiplex network	6.1 - 6.2		
Aisle Lights	20.1	Fire suppression system	38.1			**U**	
		Flashers	26.1-26.2	**P**		Urea system	14.2
B		Fog lights	26.5	Parcel rack A/C system	18.3		
Back-up camera	28.1	Forward Collision Warning	16.2	Park brake sensor	12.1	**V**	
Back-up warnings	26.3	Fuel gauge	10.1	Park brake trailer sensor	12.2	Volvo link TGW	37.1
Batteries & Equalizer	1.1			Power distribution FJB 12V	4.1		
Brake pedal sensor	12.1	**G**		Power distribution FJB 24V	4.2	**W**	
		Grounds electronic	2.1	Pwr dist. RJB 12V & 24V	5.1	Wall Led Strips	24.1
C		Grounds chassis	2.2	Power outlets 12V	30.2	Water pre-heater	17.1
Camera	44			Power outlets 120VAC	40.1	Wheel chair lift Ricon	36.1
Clearance lights	26.1-26.2	**H**				WIFI	35.9
Cluster	10.1	Hazard	26.1	**R**		Windows ajar	27.1
Cornering lights	26.5	Head lights	26.1	Reading lamps	22.1	Wipers & washer	34.1
Cruise Control	16.2	Horn	9.1	Retarder	12.1 - 15.1		
		Hostess chime	22.2	Roof Hatches With Fan	18.5		
D		Hvac defroster	18.1				
Dash lights	19.1	Hvac passenger	18.2				

Wiring diagram pages list

Wiring diagram	pages						
Multiplex outputs list	**B1**	Destination sign	28.2	**I**		**S**	
Multiplex inputs list	**B2**	Digital clock	28.1	Indirect lighting	23.1	Sound system	35.6 - 35.7
Multiplex error messages	**B3**	Driver's light & backlight	19.1	Ignition	3.2	Sound sys.-Speakers	35.2
Layout vehicule - harness	**C1**	Driver Seat	30.3	ISM Parcel Rack	5.2	Sound sys.-Video dist.	35.3
Sound system	**C2**	Driver window	30.1			Sound sys.-Seat audio	35.7
Pins configuration	**D**	**E**		**K**		Spares wires	8.1
Circuits list	**E**	ELD Gateway	42.4	Kneeling system	32.1	Stop lights	26.2
Circuit breakers list	**F**	Emergency Lights	45			Steering control ZF	37.2
Connectors list	**G**	Emirror	31.2	**L**		Step lights	29.1
Diodes list	**H**	Engine ECU	14.1	Lavatory	11.1	Strip Lighting	21.1
Resistors list	**J**	Engine heater	14.1	Line Departure Warning	16.2	Sun visor	41.1
Relays list	**K**	Engine start	3.2	Low buoy	32.1		
Fuses list	**L**	Engine & RJB cmpt. Light	25.1	Luggage door lock/unlock	33.1	**T**	
Wire identification chart	**M**	Entrance door & lights	29.1			Tag	32.1
		Entrance Step lights	29.2	**M**		Tail & licence lights	26.2
A		ESP	16.1	Main dist. ignition & batt.	3.1	Tire pressure monitor	39.1
ACB	39.1	**F**		Markers lights	26.1 - 26.2	Trailer package	26.4
Air dryer	37.1	Fast idle	14.1	Mirrors	31.1	Trailer park brake	12.2
Alternators	1.1	Fans radiator	13.1	Multiplex power distribution	7.1	Transmission ECU	15.1-15.2
Alternators Remy	1.2	Fire alarm	38.1	Multiplex network	6.1 - 6.2		
Aisle Lights	20.1	Fire suppression system	38.1			**U**	
		Flashers	26.1-26.2	**P**		Urea system	14.2
B		Fog lights	26.5	Parcel rack A/C system	18.3		
Back-up camera	28.1	Forward Collision Warning	16.2	Park brake sensor	12.1	**V**	
Back-up warnings	26.3	Fuel gauge	10.1	Park brake trailer sensor	12.2	Volvo link TGW	37.1
Batteries & Equalizer	1.1			Power distribution FJB 12V	4.1		
Brake pedal sensor	12.1	**G**		Power distribution FJB 24V	4.2	**W**	
		Grounds electronic	2.1	Pwr dist. RJB 12V & 24V	5.1	Wall Led Strips	24.1
C		Grounds chassis	2.2	Power outlets 12V	30.2	Water pre-heater	17.1
Camera	44			Power outlets 120VAC	40.1	Wheel chair lift Ricon	36.1
Clearance lights	26.1-26.2	**H**		Perimeter Lights	26.6	WIFI	35.9
Cluster	10.1	Hazard	26.1	**R**		Windows ajar	27.1
Docking lights	26.5	Head lights	26.1	Reading lamps	22.1	Wipers & washer	34.1
Cruise Control	16.2	Horn	9.1	Retarder	12.1 - 15.1		
Curb Lights	26.6	Hostess chime	22.2	Roof Hatches With Fan	18.5		
D		Hvac defroster	18.1				
Dash lights	19.1	Hvac passenger	18.2				

MULTIPLEX OUTPUT LIST

O_xx... = Physical Ouput Pin ; I_xx... = Physical Input Pin ; D_xx... = CAN Network Signal from the HVAC control Head ; B_xx.. = Multiplex system global Network Variable

Module.Pin#	Signal name	Description	Page	Connected devices	Input involved		
A36.JA:13	O_EngineRun	Engine Run Signal	3.2	A15:6	B_EngineRun	.	
					D_OnOffDrvSw	.	
					I_AccKeySw	A36.JB:6	3.2
					I_BatMonMod53	A53.J1:24	6.1
					I_BatMonMod54	A54.J1:24	6.1
					I_IgnKeySw	A36.JB:2	3.2
A36.JA:14	O_MasterRlyLatch		3.2		B_EngineRun	.	
					I_IgnKeySw	A36.JB:2	3.2
					I_RrCutOutSw	A36.JB:21	3.2
A36.JA:15	O_WakeUp	WakeUp Relay	3.3		I_AccKeySw	A36.JB:6	3.2
					I_EntDrUnlockSw	A41.J1:8	29.1
					I_HazardSw	A36.JB:4	26.1
					I_IgnKeySw	A36.JB:2	3.2
					I_RrCutOutSw	A36.JB:21	3.2
					I_WakeUp	A36.JB:5	9.1
A36.JA:24	O_CutOutRel	Emergency CutOut Relay	3.2	R21:85	I_FireExt2ndAlm	A44.J1:10	
					I_IgnKeySw	A36.JB:2	3.2
A36.JA:6	O_DrUnlockRly	Luggages doors unlocks relays	33.1		I_KeylessLuggUnl	A41.J1:18	29.1
					I_LugDorULkSw	A41.J1:20	33.1
A36.JA:7	O_DrLockRly	Luggages doors locks relays	33.1		I_AccKeySw	A36.JB:6	3.2
					I_EntDrUnlockSw	A41.J1:8	29.1
					I_HazardSw	A36.JB:4	26.1
					I_IgnKeySw	A36.JB:2	3.2
					I_KeylessLockAll	A41.J1:19	29.1
					I_LugDorLkSw	A41.J1:17	33.1
					I_RrCutOutSw	A36.JB:21	3.2
					I_WakeUp	A36.JB:5	9.1
A41.J1:11	O_ConvWakeUp	Converter wake up signal	36.1	CC2:1, FREE:FREE, CC2:1	I_AccKeySw	A36.JB:6	3.2
					I_EntDrUnlockSw	A41.J1:8	29.1
					I_HazardSw	A36.JB:4	26.1
					I_IgnKeySw	A36.JB:2	3.2
					I_RrCutOutSw	A36.JB:21	3.2
					I_WakeUp	A36.JB:5	9.1
A41.J1:15	O_ConvParkBrk	Converter park brake signal	36.1	CC2:4, FREE:FREE, CC2:4	I_ParkBrSe	A36.JB:9	12.1
A41.J1:16	O_WakeUpA41		9.1	A36.JB:5	I_AccKeySw	A36.JB:6	3.2
					I_DrvLtSw	A41.J1:2	19.1
					I_EntDorLockSw	A41.J1:9	29.1
					I_EntDorOpSe	A41.J1:5	29.1
					I_EntDrUnlockSw	A41.J1:8	29.1
					I_FireSensorA36	A41.J1:10	9.1
					I_HazardSw	A36.JB:4	26.1
					I_HornSw	A41.J1:3	9.1
					I_IgnKeySw	A36.JB:2	3.2

MULTIPLEX OUTPUT LIST

O_xx... = Physical Ouput Pin ; I_xx... = Physical Input Pin ; D_xx... = CAN Network Signal from the HVAC control Head ; B_xx.. = Multiplex system global Network Variable

Module.Pin#	Signal name	Description	Page	Connected devices	Input involved		
A41.J1:16	O_WakeUpA41		9.1	A36.JB:5	I_KeylessDrUnl	A41.J1:4	29.1
					I_KeylessEntReq	A41.J1:21	29.1
					I_KeylessIntru	A41.J1:7	29.1
					I_KeylessLockAll	A41.J1:19	29.1
					I_KeylessLuggUnl	A41.J1:18	29.1
					I_LugDorLkSw	A41.J1:17	33.1
					I_LugDorULkSw	A41.J1:20	33.1
					I_RrCutOutSw	A36.JB:21	3.2
					I_WakeUp	A36.JB:5	9.1
A42.J1:11	O_ConvIgnition	Converter ignition signal	36.1	CC2:5, FREE:FREE, CC2:5	I_IgnKeySw	A36.JB:2	3.2
A42.J1:12	O_ConvEngRun	Converter engine run signal	36.1	CC2:6, FREE:FREE, CC2:6	B_EngineRun	.	
A42.J1:13	O_SldO2MotIn	Rear Slide Out retracting	36.1	CC2:9, CC2:9, FREE:FREE	I_BatMonMod57	A57.J1:24	6.1
					I_SldO1VacPrSe	A56.J1:13	20.1
					I_SldO2CloseSw	A57.J1:10	20.1
					I_SldO2LimiOutSw	A57.J1:14	20.1
					I_SldO2LimitInSe	A57.J1:11	20.1
					I_SldO2OpenSw	A57.J1:9	20.1
					I_SldO2PBrakeSw	A57.J1:12	20.1
A42.J1:14	O_SldO1MotIn	Front Slide Out retracting	36.1	CC2:7, CC2:7, FREE:FREE	I_BatMonMod56	A56.J1:24	6.1
					I_SldO1CloseSw	A56.J1:10	20.1
					I_SldO1LimiOutSw	A56.J1:14	20.1
					I_SldO1LimitInSe	A56.J1:11	20.1
					I_SldO1OpenSw	A56.J1:9	20.1
					I_SldO1PBrakeSw	A56.J1:12	20.1
					I_SldO1VacPrSe	A56.J1:13	20.1
A42.J1:15	O_TransShftDown	Transmission Shift Down	38.1	CC1:6	I_VIPSteerWh1	A55.J1:3	38.1
					I_VIPSteerWh2	A55.J1:4	38.1
					I_VIPSteerWh5V	A55.J1:2	38.1
A42.J1:16	O_SldO1MotOut	Front Slide Out extending	36.1	CC2:8, CC2:8, FREE:FREE	I_BatMonMod56	A56.J1:24	6.1
					I_SldO1CloseSw	A56.J1:10	20.1
					I_SldO1LimiOutSw	A56.J1:14	20.1
					I_SldO1LimitInSe	A56.J1:11	20.1
					I_SldO1OpenSw	A56.J1:9	20.1
					I_SldO1PBrakeSw	A56.J1:12	20.1
					I_SldO1VacPrSe	A56.J1:13	20.1
A42.J1:30	O_TransShftUp	Transmission Shift Up	38.1	CC1:7	I_VIPSteerWh1	A55.J1:3	38.1
					I_VIPSteerWh2	A55.J1:4	38.1
					I_VIPSteerWh5V	A55.J1:2	38.1
A43.J1:11	O_SldO2MotOut	Rear Slide Out extending	36.1	CC2:10, CC2:10, FREE:FREE	I_BatMonMod57	A57.J1:24	6.1
					I_SldO1VacPrSe	A56.J1:13	20.1
					I_SldO2CloseSw	A57.J1:10	20.1
					I_SldO2LimiOutSw	A57.J1:14	20.1
					I_SldO2LimitInSe	A57.J1:11	20.1

MULTIPLEX OUTPUT LIST

O_xx... = Physical Ouput Pin ; I_xx... = Physical Input Pin ; D_xx... = CAN Network Signal from the HVAC control Head ; B_xx.. = Multiplex system global Network Variable

Module.Pin#	Signal name	Description	Page	Connected devices	Input involved		
A43.J1:11	O_SldO2MotOut	Rear Slide Out extending	36.1	CC2:10, CC2:10, FREE:FREE	I_SldO2OpenSw	A57.J1:9	20.1
					I_SldO2PBrakeSw	A57.J1:12	20.1
A43.J1:16	O_BrkRedCompat	Brake Redundant Compatible	38.1	A72.J2:7	I_BrkLtSeFrSig	A36.JB:13	12.1
					I_BrkLtSeRrSig	A51.J1:10	12.1
					I_IgnKeySw	A36.JB:2	3.2
					I_VIPSteerWh1	A55.J1:3	38.1
					I_VIPSteerWh2	A55.J1:4	38.1
					I_VIPSteerWh5V	A55.J1:2	38.1
A44.J1:1	O_DashTrapPMo	Dash Trap Motor	18.1	Mo3:1	D_AirFlapBit0	.	
					D_AirFlapBit1	.	
					D_AirFlapBit2	.	
					I_IgnKeySw	A36.JB:2	3.2
A44.J1:2	O_DashTrapNMo	Dash Trap Motor Return	18.1	Mo3:3	D_AirFlapBit0	.	
					D_AirFlapBit1	.	
					D_AirFlapBit2	.	
					I_IgnKeySw	A36.JB:2	3.2
A44.J1:20	O_DashBackLit	Dash BackLighting	19.1		I_HdLtPos1Sw	A43.J1:4	26.1
A44.J1:7	O_BackUpMon	Backup Monitor Signal	28.1	MONITOR:1	I_BackUpCamSw	A55.J1:17	28.1
A44.J1:8	O_FrClearLb	Front Clearance Lights Bulb	26.1		B_BatterySaver	.	
					B_TstModExtLight	.	
					I_BlinkSw	A43.J1:20	26.1
					I_HdLtPos1Sw	A43.J1:4	26.1
					I_HdLtPos2SwLH	A45.J1:12	26.1
A45.J1:1	O_FootTrpPSol	Foot Trap Solenoid	18.1	Mo4:A	D_AirFlapBit0	.	
					D_AirFlapBit1	.	
					D_AirFlapBit2	.	
					I_IgnKeySw	A36.JB:2	3.2
A45.J1:2	O_FootTrpNSol	Foot Trap Solenoid	18.1	Mo4:B	D_AirFlapBit0	.	
					D_AirFlapBit1	.	
					D_AirFlapBit2	.	
					I_IgnKeySw	A36.JB:2	3.2
A45.J1:20	O_HornElectric	Horn Electric	9.1		I_AccKeySw	A36.JB:6	3.2
					I_EntDrUnlockSw	A41.J1:8	29.1
					I_FireExt1stAl	A36.JB:23	
					I_FireExt2ndAlm	A44.J1:10	
					I_FireSensorA36	A41.J1:10	9.1
					I_HazardSw	A36.JB:4	26.1
					I_HornSelectSw	A43.J1:7	9.1
					I_HornSw	A41.J1:3	9.1
					I_IgnKeySw	A36.JB:2	3.2
					I_KeylessDrUnl	A41.J1:4	29.1
					I_KeylessIntru	A41.J1:7	29.1
					I_KeylessLockAll	A41.J1:19	29.1

MULTIPLEX OUTPUT LIST

O_xx... = Physical Ouput Pin ; I_xx... = Physical Input Pin ; D_xx... = CAN Network Signal from the HVAC control Head ; B_xx.. = Multiplex system global Network Variable

Module.Pin#	Signal name	Description	Page	Connected devices	Input involved		
A45.J1:20	O_HornElectric	Horn Electric	9.1		I_KeylessLuggUnl	A41.J1:18	29.1
					I_KeylessPanic	A41.J1:6	29.1
					I_LugDorLkSw	A41.J1:17	33.1
					I_RrCutOutSw	A36.JB:21	3.2
					I_WakeUp	A36.JB:5	9.1
A45.J1:21	O_LHFrMkrLb	Left Hand Front Markers Light Bulb	26.1		B_BatterySaver	.	
					B_TstModExtLight	.	
					I_BlinkSw	A43.J1:20	26.1
					I_HdLtPos1Sw	A43.J1:4	26.1
					I_HdLtPos2SwLH	A45.J1:12	26.1
					I_IgnKeySw	A36.JB:2	3.2
					I_KeylessIntru	A41.J1:7	29.1
					I_KeylessPanic	A41.J1:6	29.1
A45.J1:3	O_LHFrFlshLb	Left Hand Front Flasher Light Bulb	26.1		B_BatterySaver	.	
					B_TstModExtLight	.	
					I_LHFlshSw	A45.J1:9	26.1
					I_LHFlshSwRrSig	A51.J1:9	26.2
					I_RHFlshSwRrSig	A51.J1:12	26.2
A45.J1:4	O_LHFogLb	Left Hand Fog Light Bulb	26.3	L95:A	B_BatterySaver	.	
					B_TstModExtLight	.	
					I_FogLightSw	A55.J1:6	26.3
A45.J1:5	O_LHCornerLb	Left Hand Cornering Light Bulb	26.3	L97.A:1	B_BatterySaver	.	
					B_TstModExtLight	.	
					I_CorneringLtSw	A55.J1:7	26.3
					I_LHFlshSw	A45.J1:9	26.1
A45.J1:6	O_LHHiBmLb	Left Hand Hi Beam Light Bulb	26.1	L60.B:1	B_BatterySaver	.	
					B_EngineRun	.	
					B_OneAltCharging	.	
					B_TstModExtLight	.	
					I_HdLtHiLowBmSw	A43.J1:8	26.1
					I_HdLtPos2SwLH	A45.J1:12	26.1
					I_HiBeamCallSw	A43.J1:3	26.1
A45.J1:7	O_LHLwBmLb	Left Hand Low Beam Light Bulb	26.1	L60.A:1	B_BatterySaver	.	
					B_TstModExtLight	.	
					I_HdLtPos2SwLH	A45.J1:12	26.1
A45.J1:8	O_FlshAudiRel	Flasher Audible Relay	26.1	R16:86	I_HazardSw	A36.JB:4	26.1
					I_IgnKeySw	A36.JB:2	3.2
					I_LHFlshSw	A45.J1:9	26.1
					I_LHFlshSwRrSig	A51.J1:9	26.2
					I_RHFlshSw	A48.J1:12	26.1
					I_RHFlshSwRrSig	A51.J1:12	26.2
A46.J1:1	O_AuxFanSpeed	Auxiliary fan speed control	18.3	A32.A:D	B_BatterySaver	.	
					B_EngineRun	.	

MULTIPLEX OUTPUT LIST

O_xx... = Physical Ouput Pin ; I_xx... = Physical Input Pin ; D_xx... = CAN Network Signal from the HVAC control Head ; B_xx.. = Multiplex system global Network Variable

Module.Pin#	Signal name	Description	Page	Connected devices	Input involved		
A46.J1:1	O_AuxFanSpeed	Auxiliary fan speed control	18.3	A32.A:D	B_OneAltCharging	.	
					D_AuxFanSpdBit0	.	
					D_AuxFanSpdBit1	.	
					D_AuxFanSpdBit2	.	
					D_AuxFnOnOffSw	.	
					I_BatMonMod46	A46.J1:24	6.1
					I_IgnKeySw	A36.JB:2	3.2
A46.J1:21	O_HeadLmpWsh		34.1	Mo54:2	I_HeadLmpWshSw	A55.J1:18	34.1
A46.J1:3	O_LwWshPmp	Lower Wiper Washer Pump	34.1		B_BatterySaver	.	
					I_LwWshSw	A46.J1:9	34.1
A46.J1:5	O_DrvRfgSol	Driver refrigerent solenoid	18.1	D2.A:1	B_BatterySaver	.	
					B_EngineRun	.	
					B_LowVoltage	.	
					B_TestMode	.	
					B_TstModHvac	.	
					B_TstModSAC	.	
					I_AcPresHiSSe	A52.J1:13	18.2
					I_AcPresLoSSe	A52.J1:14	18.2
					I_FrontOutTemp	A47.J1:14	18.3
					I_OutDoorTempSe	A54.J1:14	18.1
A46.J1:6	O_DrvHeatSol	Driver Heat Solenoid	18.1	So8:1	B_BatterySaver	.	
					B_EngineRun	.	
					B_LowVoltage	.	
					B_OneAltCharging	.	
					B_TestMode	.	
					B_TstModHvac	.	
					B_TstModSAC	.	
					D_AirFlapBit0	.	
					D_AirFlapBit1	.	
					D_AirFlapBit2	.	
					D_AuxFanSpdBit0	.	
					D_AuxFanSpdBit1	.	
					D_AuxFanSpdBit2	.	
					D_DriverSetPts	.	
					D_DrvFnSpdBit0	.	
					D_DrvFnSpdBit1	.	
					D_DrvFnSpdBit2	.	
					D_OnOffPassSw	.	
					D_PassSetPts	.	
					I_BatMonMod46	A46.J1:24	6.1
					I_BatMonMod54	A54.J1:24	6.1
					I_DefrostHighSw	A47.J1:10	18.1
					I_DefrostLowSw	A47.J1:12	18.1

MULTIPLEX OUTPUT LIST

O_xx... = Physical Ouput Pin ; I_xx... = Physical Input Pin ; D_xx... = CAN Network Signal from the HVAC control Head ; B_xx.. = Multiplex system global Network Variable

Module.Pin#	Signal name	Description	Page	Connected devices	Input involved		
A46.J1:6	O_DrvHeatSol	Driver Heat Solenoid	18.1	So8:1	I_DrvTempSe	A55.J1:1	18.1
					I_FireExt1stAl	A36.JB:23	
					I_FireExt2ndAlm	A44.J1:10	
					I_FireSensorA36	A41.J1:10	9.1
					I_FrontOutTemp	A47.J1:14	18.3
					I_OutDoorTempSe	A54.J1:14	18.1
A46.J1:8	O_AuxSolValve	Auxiliary refrigerant solenoid valve	18.3	So38:A	B_BatterySaver	.	
					B_EngineRun	.	
					B_TestMode	.	
					B_TstModSAC	.	
					D_AuxFnOnOffSw	.	
					I_AcPresHiSSe	A52.J1:13	18.2
					I_AcPresLoSSe	A52.J1:14	18.2
A47.J1:1	O_DrvDefFanMo	Driver Defroster Fan Motor	18.1	A24.B:B	B_BatterySaver	.	
					B_EngineRun	.	
					B_LowVoltage	.	
					D_DrvFnSpdBit0	.	
					D_DrvFnSpdBit1	.	
					D_DrvFnSpdBit2	.	
					D_OnOffDrvSw	.	
					I_BatMonMod47	A47.J1:24	6.1
					I_IgnKeySw	A36.JB:2	3.2
A47.J1:2	O_DrvRecTrap	Driver Recycle Trap	18.1	L203:A	B_BatterySaver	.	
					B_EngineRun	.	
					B_TestMode	.	
					B_TstModHvac	.	
					B_TstModSAC	.	
					D_RecSw	.	
A47.J1:20	O_AuxWaterPump	Auxiliary water pump	18.3		B_BatterySaver	.	
					B_EngineRun	.	
					B_OneAltCharging	.	
					B_TestMode	.	
					B_TstModSAC	.	
					D_AuxFanSpdBit0	.	
					D_AuxFanSpdBit1	.	
					D_AuxFanSpdBit2	.	
					D_DriverSetPts	.	
					D_DrvFnSpdBit0	.	
					D_DrvFnSpdBit1	.	
					D_DrvFnSpdBit2	.	
					I_DefrostHighSw	A47.J1:10	18.1
					I_DefrostLowSw	A47.J1:12	18.1
					I_FrontOutTemp	A47.J1:14	18.3

MULTIPLEX OUTPUT LIST

O_xx... = Physical Ouput Pin ; I_xx... = Physical Input Pin ; D_xx... = CAN Network Signal from the HVAC control Head ; B_xx.. = Multiplex system global Network Variable

Module.Pin#	Signal name	Description	Page	Connected devices	Input involved		
A47.J1:20	O_AuxWaterPump	Auxiliary water pump	18.3		I_OutDoorTempSe	A54.J1:14	18.1
A47.J1:3	O_LwWipSpd1	Lower Wiper Speed 1	34.1	R23:86	B_BatterySaver	.	
					I_LwWipIntSw	A42.J1:8	34.1
					I_LwWshSw	A46.J1:9	34.1
A47.J1:5	O_EntDorStpLb	Entrance Door Step Light Bulb	29.1		I_AccKeySw	A36.JB:6	3.2
					I_EntDorOpSe	A41.J1:5	29.1
					I_EntDrUnlockSw	A41.J1:8	29.1
					I_HazardSw	A36.JB:4	26.1
					I_IgnKeySw	A36.JB:2	3.2
					I_KeylessDrUnl	A41.J1:4	29.1
					I_KeylessLuggUnl	A41.J1:18	29.1
					I_LugDorLkSw	A41.J1:17	33.1
					I_RrCutOutSw	A36.JB:21	3.2
					I_WakeUp	A36.JB:5	9.1
A47.J1:6	O_DriverLtLb	Driver Light Bulb	19.1		B_BatterySaver	.	
					I_DrvLtSw	A41.J1:2	19.1
A47.J1:7	O_RHDefrostFan	Passenger defrost fan speed control	18.1	A30.A:D	B_BatterySaver	.	
					B_EngineRun	.	
					B_LowVoltage	.	
					D_DrvFnSpdBit0	.	
					D_DrvFnSpdBit1	.	
					D_DrvFnSpdBit2	.	
					D_OnOffDrvSw	.	
					I_BatMonMod47	A47.J1:24	6.1
					I_DefrostHighSw	A47.J1:10	18.1
					I_DefrostLowSw	A47.J1:12	18.1
					I_IgnKeySw	A36.JB:2	3.2
A48.J1:1	O_DoorUnlockMo	Entrance door unlock motor	29.1		I_AccKeySw	A36.JB:6	3.2
					I_EntDorOpSe	A41.J1:5	29.1
					I_EntDrUnlockSw	A41.J1:8	29.1
					I_EntDrUnSw	A48.J1:9	29.1
					I_HazardSw	A36.JB:4	26.1
					I_IgnKeySw	A36.JB:2	3.2
					I_KeylessDrUnl	A41.J1:4	29.1
					I_RrCutOutSw	A36.JB:21	3.2
					I_WakeUp	A36.JB:5	9.1
A48.J1:2	O_DoorLockMo	Entrance door lock motor	29.1		I_AccKeySw	A36.JB:6	3.2
					I_EntDorLockSw	A41.J1:9	29.1
					I_EntDorOpSe	A41.J1:5	29.1
					I_EntDrUnlockSw	A41.J1:8	29.1
					I_HazardSw	A36.JB:4	26.1
					I_IgnKeySw	A36.JB:2	3.2
					I_KeylessLockAll	A41.J1:19	29.1

MULTIPLEX OUTPUT LIST

O_xx... = Physical Ouput Pin ; I_xx... = Physical Input Pin ; D_xx... = CAN Network Signal from the HVAC control Head ; B_xx.. = Multiplex system global Network Variable

Module.Pin#	Signal name	Description	Page	Connected devices	Input involved		
A48.J1:2	O_DoorLockMo	Entrance door lock motor	29.1		I_RrCutOutSw	A36.JB:21	3.2
					I_WakeUp	A36.JB:5	9.1
A48.J1:20	O_RHFrSidFlshLb	RH Front Side Flasher L-Bulb	26.1	L64:1	B_BatterySaver	.	
					B_TstModExtLight	.	
					I_LHFlshSwRrSig	A51.J1:9	26.2
					I_RHFlshSw	A48.J1:12	26.1
					I_RHFlshSwRrSig	A51.J1:12	26.2
A48.J1:3	O_RHHiBeamLb	Right Hand Hi Beam Light Bulb	26.1	L59.B:1	B_BatterySaver	.	
					B_EngineRun	.	
					B_OneAltCharging	.	
					B_TstModExtLight	.	
					I_HdLtHiLowBmSw	A43.J1:8	26.1
					I_HdLtPos2SwLH	A45.J1:12	26.1
					I_HiBeamCallSw	A43.J1:3	26.1
A48.J1:4	O_RHLwBeamLb	Right Hand Low Beam Light Bulb	26.1	L59.A:1	B_BatterySaver	.	
					B_TstModExtLight	.	
					I_HdLtPos2SwRH	A48.J1:10	26.1
A48.J1:5	O_RHCornerLb	Right Hand Cornering Light Bulb	26.3	L98.A:1	B_BatterySaver	.	
					B_TstModExtLight	.	
					I_CorneringLtSw	A55.J1:7	26.3
					I_RHFlshSw	A48.J1:12	26.1
A48.J1:6	O_RHFrFlshLb	Right Hand Front Flasher Light Bulb	26.1	L61:3	B_BatterySaver	.	
					B_TstModExtLight	.	
					I_LHFlshSwRrSig	A51.J1:9	26.2
					I_RHFlshSw	A48.J1:12	26.1
					I_RHFlshSwRrSig	A51.J1:12	26.2
A48.J1:7	O_RHFrMrkLb	Right Hand Front Markers Light Bulb	26.1		B_BatterySaver	.	
					B_TstModExtLight	.	
					I_BlinkSw	A43.J1:20	26.1
					I_HdLtPos1Sw	A43.J1:4	26.1
					I_HdLtPos2SwLH	A45.J1:12	26.1
					I_KeylessIntru	A41.J1:7	29.1
					I_KeylessPanic	A41.J1:6	29.1
A50.J1:2	O_TransInhibit	Transmission Inhibit	15.1		I_BrkLtSeFrSig	A36.JB:13	12.1
					I_BrkLtSeRrSig	A51.J1:10	12.1
					I_SldO1LimitInSe	A56.J1:11	20.1
					I_SldO2LimitInSe	A57.J1:11	20.1
					I_SldO3LimitInSe	A58.J1:11	20.2
A50.J1:20	O_RevLbBuz	Reverse Alarm and Light Bulb	26.3		B_BatterySaver	.	
					B_EngineRun	.	
					B_TestMode	.	
					B_TestSwBuz2	.	
					B_TestSwBuzzer	.	

MULTIPLEX OUTPUT LIST

O_xx... = Physical Ouput Pin ; I_xx... = Physical Input Pin ; D_xx... = CAN Network Signal from the HVAC control Head ; B_xx.. = Multiplex system global Network Variable

Module.Pin#	Signal name	Description	Page	Connected devices	Input involved		
A50.J1:20	O_RevLbBuz	Reverse Alarm and Light Bulb	26.3		B_TstModExtLight	.	
					B_TstModHvac	.	
					B_TstModHvacNext	.	
					B_TstModSAC	.	
					B_TstModSACNext	.	
					B_TstSwBuz3	.	
A50.J1:3	O_RevAlarm	Back up alarm	26.3	L187.A:A	B_BatterySaver	.	
					B_EngineRun	.	
					B_TestMode	.	
					B_TestSwBuz2	.	
					B_TestSwBuzzer	.	
					B_TstModExtLight	.	
					B_TstModHvac	.	
					B_TstModHvacNext	.	
					B_TstModSAC	.	
					B_TstModSACNext	.	
					B_TstSwBuz3	.	
					D_NextWheel	.	
					I_RevAlrmSw	A43.J1:6	26.3
A50.J1:4	O_ReClearLb	Rear Clearance Light Bulb	26.2		B_BatterySaver	.	
					B_TstModExtLight	.	
					I_BlinkSw	A43.J1:20	26.1
					I_HdLtPos1Sw	A43.J1:4	26.1
					I_HdLtPos2SwLH	A45.J1:12	26.1
A50.J1:5	O_LHCtrFlshLb	Water Filter Indicator Warning	26.2	L70:1	B_BatterySaver	.	
					B_TstModExtLight	.	
					I_LHFlshSwRrSig	A51.J1:9	26.2
					I_RHFlshSwRrSig	A51.J1:12	26.2
A50.J1:6	O_BrLtLowerLb		26.2		B_BatterySaver	.	
					B_EngineRun	.	
					B_TstModExtLight	.	
					I_BrkLtSeFrSig	A36.JB:13	12.1
					I_BrkLtSeRrSig	A51.J1:10	12.1
					I_EngBrOnSe	A42.J1:18	
					I_IgnKeySw	A36.JB:2	3.2
					I_RetdrSig	A50.J1:12	15.1
A50.J1:7	O_RHCtrFlshLb	Wheel Chair Lift Warning Indicator	26.2	L68:1	B_BatterySaver	.	
					B_TstModExtLight	.	
					I_LHFlshSwRrSig	A51.J1:9	26.2
					I_RHFlshSwRrSig	A51.J1:12	26.2
A50.J1:8	O_CtrSdMrkLb	Tag Axle Warning Indicator	26.2		B_BatterySaver	.	
					B_TstModExtLight	.	
					I_BlinkSw	A43.J1:20	26.1

MULTIPLEX OUTPUT LIST

O_xx... = Physical Ouput Pin ; I_xx... = Physical Input Pin ; D_xx... = CAN Network Signal from the HVAC control Head ; B_xx.. = Multiplex system global Network Variable

Module.Pin#	Signal name	Description	Page	Connected devices	Input involved		
A50.J1:8	O_CtrSdMrkLb	Tag Axle Warning Indicator	26.2		I_HdLtPos1Sw	A43.J1:4	26.1
					I_HdLtPos2SwLH	A45.J1:12	26.1
A51.J1:1	O_SerBrkTrans	Servise Brake Signal For	15.1	A1Gen4.A:62	I_BrkLtSeFrSig	A36.JB:13	12.1
A51.J1:21	O_LHReFlshLb	Left Hand Rear Flasher Light Bulb	26.2		B_BatterySaver	.	
					B_TstModExtLight	.	
					I_LHFlshSwRrSig	A51.J1:9	26.2
					I_RHFlshSwRrSig	A51.J1:12	26.2
A51.J1:3	O_RHReFlshLb	Right Hand Rear Flasher Light Bulb	26.2		B_BatterySaver	.	
					B_TstModExtLight	.	
					I_LHFlshSwRrSig	A51.J1:9	26.2
					I_RHFlshSwRrSig	A51.J1:12	26.2
A51.J1:4	O_LHDockLb	Left Hand Docking Light Bulb	26.3	L93.A:1	B_BatterySaver	.	
					B_TstModExtLight	.	
					I_DockingLtSw	A55.J1:8	26.3
					I_LowDockLtsSw	A55.J1:9	26.3
A51.J1:5	O_RHDockLb	Right Hand Docking Light Bulb	26.3	L94.A:1	B_BatterySaver	.	
					B_TstModExtLight	.	
					I_DockingLtSw	A55.J1:8	26.3
					I_LowDockLtsSw	A55.J1:9	26.3
A51.J1:6	O_BrLtUpperLb		26.2		B_BatterySaver	.	
					B_EngineRun	.	
					B_TstModExtLight	.	
					I_BrkLtSeFrSig	A36.JB:13	12.1
					I_BrkLtSeRrSig	A51.J1:10	12.1
					I_EngBrOnSe	A42.J1:18	
					I_RetdrSig	A50.J1:12	15.1
A51.J1:7	O_CyclopeLt	Cyclope Brake Light	26.2	L81.A:1	B_BatterySaver	.	
					B_TstModExtLight	.	
					I_BrkLtSeFrSig	A36.JB:13	12.1
					I_BrkLtSeRrSig	A51.J1:10	12.1
A51.J1:8	O_ReTailMkLb	Rear Tail Markers Light Bulb	26.2		B_BatterySaver	.	
					B_TstModExtLight	.	
					I_AccKeySw	A36.JB:6	3.2
					I_BlinkSw	A43.J1:20	26.1
					I_EntDrUnlockSw	A41.J1:8	29.1
					I_HazardSw	A36.JB:4	26.1
					I_HdLtPos1Sw	A43.J1:4	26.1
					I_HdLtPos2SwLH	A45.J1:12	26.1
					I_IgnKeySw	A36.JB:2	3.2
					I_KeylessDrUnl	A41.J1:4	29.1
					I_KeylessIntru	A41.J1:7	29.1
					I_KeylessPanic	A41.J1:6	29.1
					I_RrCutOutSw	A36.JB:21	3.2

MULTIPLEX OUTPUT LIST

O_xx... = Physical Ouput Pin ; I_xx... = Physical Input Pin ; D_xx... = CAN Network Signal from the HVAC control Head ; B_xx.. = Multiplex system global Network Variable

Module.Pin#	Signal name	Description	Page	Connected devices	Input involved		
A51.J1:8	O_ReTailMkLb	Rear Tail Markers Light Bulb	26.2		I_WakeUp	A36.JB:5	9.1
A52.J1:1	O_EngFanSpd1	Engine Fan Radiator Speed 1	13.1		B_BatterySaver	.	
					B_EngineRun	.	
					B_TestMode	.	
					B_TstModHvac	.	
					B_TstModSAC	.	
					I_AcPresHiSSe	A52.J1:13	18.2
					I_EngFanSpd1	A52.J1:9	13.1
					I_EngFanSw	A36.JB:14	
					I_FireExt1stAl	A36.JB:23	
					I_FireExt2ndAlm	A44.J1:10	
					I_FireSensorA36	A41.J1:10	9.1
A52.J1:2	O_EngFanSpd2	Engine Fan Radiator Speed 2	13.1		B_BatterySaver	.	
					B_EngineRun	.	
					B_TestMode	.	
					B_TstModHvac	.	
					B_TstModSAC	.	
					I_AcPresHiSSe	A52.J1:13	18.2
					I_EngFanSpd1	A52.J1:9	13.1
					I_EngFanSpd2	A52.J1:10	13.1
					I_EngFanSw	A36.JB:14	
					I_FireExt1stAl	A36.JB:23	
					I_FireExt2ndAlm	A44.J1:10	
					I_FireSensorA36	A41.J1:10	9.1
A52.J1:20	O_AcCluSol	Hvac AC Clutch Solenoid	18.2		B_BatterySaver	.	
					B_EngineRun	.	
					B_TestMode	.	
					B_TstModHvac	.	
					B_TstModSAC	.	
					I_AcPresHiSSe	A52.J1:13	18.2
					I_AcPresLoSSe	A52.J1:14	18.2
A52.J1:21	O_AcUnldRH	Hvac Right Hand Cylinder Unloader	18.2		B_BatterySaver	.	
					B_EngineRun	.	
					B_TestMode	.	
					B_TstModHvac	.	
					D_PassSetPts	.	
					I_AcPresHiSSe	A52.J1:13	18.2
					I_AcPresLoSSe	A52.J1:14	18.2
A52.J1:5	O_EngCmptLbZF	Engine Compartiment Light Switch	25.1		I_EngCmptLtSw	A52.J1:11	25.1
					I_EngDoorSe	A52.J1:12	25.1
A52.J1:8	O_AcUnldLH	Hvac Left Hand Cylinder Unloader	18.2		B_BatterySaver	.	
					B_EngineRun	.	
					B_TestMode	.	

MULTIPLEX OUTPUT LIST

O_xx... = Physical Ouput Pin ; I_xx... = Physical Input Pin ; D_xx... = CAN Network Signal from the HVAC control Head ; B_xx.. = Multiplex system global Network Variable

Module.Pin#	Signal name	Description	Page	Connected devices	Input involved		
A52.J1:8	O_AcUnldLH	Hvac Left Hand Cylinder Unloader	18.2		B_TstModHvac	.	
					D_PassSetPts	.	
					I_AcPresHiSSe	A52.J1:13	18.2
					I_AcPresLoSSe	A52.J1:14	18.2
A53.J1:1	O_StarterRlyRtn	Starter Relay Return	3.2	Term49	I_IgnKeySw	A36.JB:2	3.2
A53.J1:5	O_RJBDoFanMo	Rear junction box door fan	11.1	Mo53:1	B_BatterySaver	.	
					B_EngineRun	.	
					B_TestMode	.	
					B_TstModHvac	.	
					B_TstModSAC	.	
					I_BatMonMod53	A53.J1:24	6.1
					I_FrontOutTemp	A47.J1:14	18.3
					I_OutDoorTempSe	A54.J1:14	18.1
A53.J1:6	O_StarterRel	Starter Relay	3.2		B_BatterySaver	.	
					B_EngineRun	.	
					B_TestMode	.	
					B_TstModHvac	.	
					B_TstModSAC	.	
					I_AccKeySw	A36.JB:6	3.2
					I_EngStaRrSw	A53.J1:11	3.2
					I_EntDrUnlockSw	A41.J1:8	29.1
					I_FrEngStaSw	A36.JB:22	3.2
					I_FrStrtEnSw	A53.J1:9	3.2
					I_HazardSw	A36.JB:4	26.1
					I_IgnKeySw	A36.JB:2	3.2
					I_KeylessDrUnl	A41.J1:4	29.1
					I_KeylessIntru	A41.J1:7	29.1
					I_NeutralSe	A50.J1:11	15.1
					I_RrCutOutSw	A36.JB:21	3.2
					I_RrStrtEnSw	A53.J1:10	3.2
					I_StartLockOut	A53.J1:12	
					I_WakeUp	A36.JB:5	9.1
A54.J1:1	O_CndSpd2Rel	Condensor Fan Speed 2 Relay	18.2	R9:2	B_BatterySaver	.	
					B_EngineRun	.	
					B_LowVoltage	.	
					B_TestMode	.	
					B_TstModHvac	.	
					D_DriverSetPts	.	
					D_OnOffPassSw	.	
					D_PassSetPts	.	
					I_AcPresHiSSe	A52.J1:13	18.2
					I_AcPresLoSSe	A52.J1:14	18.2
					I_BatMonMod54	A54.J1:24	6.1

MULTIPLEX OUTPUT LIST

O_xx... = Physical Ouput Pin ; I_xx... = Physical Input Pin ; D_xx... = CAN Network Signal from the HVAC control Head ; B_xx.. = Multiplex system global Network Variable

Module.Pin#	Signal name	Description	Page	Connected devices	Input involved		
A54.J1:1	O_CndSpd2Rel	Condensor Fan Speed 2 Relay	18.2	R9:2	I_CoilTherSe	A47.J1:11	18.3
					I_DrvTempSe	A55.J1:1	18.1
					I_FireExt1stAl	A36.JB:23	
					I_FireExt2ndAlm	A44.J1:10	
					I_FireSensorA36	A41.J1:10	9.1
					I_FrontOutTemp	A47.J1:14	18.3
					I_OutDoorTempSe	A54.J1:14	18.1
A54.J1:2	O_EvaSpd2Rel	Evaporator Fan Speed 2	18.2	TermMo9	B_BatterySaver	.	
					B_EngineRun	.	
					B_LowVoltage	.	
					B_TestMode	.	
					B_TstModHvac	.	
					D_OnOffPassSw	.	
					D_PassSetPts	.	
					I_Alt2Voltage	A49.J1:9	3.2
					I_BatMonMod53	A53.J1:24	6.1
					I_BatMonMod54	A54.J1:24	6.1
					I_FireExt1stAl	A36.JB:23	
					I_FireExt2ndAlm	A44.J1:10	
					I_FireSensorA36	A41.J1:10	9.1
A54.J1:20	O_ACRecPass	A/C Pass. Gaz Cylinder Recycle	18.2	L205:1	B_BatterySaver	.	
					B_EngineRun	.	
					B_TestMode	.	
					B_TstModHvac	.	
					B_TstModSAC	.	
					D_RecSw	.	
A54.J1:3	O_PasRfgSol	Passenger Refrigerent Solenoid	18.2	D11.A:1	B_BatterySaver	.	
					B_EngineRun	.	
					B_LowVoltage	.	
					B_TestMode	.	
					B_TstModHvac	.	
					D_DriverSetPts	.	
					D_OnOffPassSw	.	
					D_PassSetPts	.	
					I_BatMonMod54	A54.J1:24	6.1
					I_CoilTherSe	A47.J1:11	18.3
					I_DrvTempSe	A55.J1:1	18.1
					I_FireExt1stAl	A36.JB:23	
					I_FireExt2ndAlm	A44.J1:10	
					I_FireSensorA36	A41.J1:10	9.1
					I_FrontOutTemp	A47.J1:14	18.3
					I_OutDoorTempSe	A54.J1:14	18.1
A54.J1:4	O_ACWaterPm	Hvac Water Pump	18.2		B_BatterySaver	.	

MULTIPLEX OUTPUT LIST

O_xx... = Physical Ouput Pin ; I_xx... = Physical Input Pin ; D_xx... = CAN Network Signal from the HVAC control Head ; B_xx.. = Multiplex system global Network Variable

Module.Pin#	Signal name	Description	Page	Connected devices	Input involved		
A54.J1:4	O_ACWaterPmp	Hvac Water Pump	18.2		B_EngineRun	.	
					B_OneAltCharging	.	
					B_TestMode	.	
					B_TstModHvac	.	
					D_DrvFnSpdBit0	.	
					D_DrvFnSpdBit1	.	
					D_DrvFnSpdBit2	.	
					D_OnOffPassSw	.	
					D_PassSetPts	.	
					I_BatMonMod54	A54.J1:24	6.1
					I_FireExt1stAl	A36.JB:23	
					I_FireExt2ndAlm	A44.J1:10	
					I_FireSensorA36	A41.J1:10	9.1
					I_FrontOutTemp	A47.J1:14	18.3
					I_OutDoorTempSe	A54.J1:14	18.1
A54.J1:5	O_CndSpd1Rel	Condensor Fan Speed 1 Relay	18.2	R10:2	B_BatterySaver	.	
					B_EngineRun	.	
					B_LowVoltage	.	
					B_TestMode	.	
					B_TstModHvac	.	
					D_DriverSetPts	.	
					D_OnOffPassSw	.	
					D_PassSetPts	.	
					I_AcPresHiSSe	A52.J1:13	18.2
					I_AcPresLoSSe	A52.J1:14	18.2
					I_BatMonMod54	A54.J1:24	6.1
					I_CoilTherSe	A47.J1:11	18.3
					I_DrvTempSe	A55.J1:1	18.1
					I_FireExt1stAl	A36.JB:23	
					I_FireExt2ndAlm	A44.J1:10	
					I_FireSensorA36	A41.J1:10	9.1
					I_FrontOutTemp	A47.J1:14	18.3
					I_OutDoorTempSe	A54.J1:14	18.1
A54.J1:7	O_EvaSpd1Rel	Evaporator Fan Speed 1 Relay	18.2	R12:2	B_BatterySaver	.	
					B_EngineRun	.	
					B_LowVoltage	.	
					B_TestMode	.	
					B_TstModHvac	.	
					D_OnOffPassSw	.	
					I_BatMonMod54	A54.J1:24	6.1
					I_FireExt1stAl	A36.JB:23	
					I_FireExt2ndAlm	A44.J1:10	
					I_FireSensorA36	A41.J1:10	9.1

MULTIPLEX OUTPUT LIST

O_xx... = Physical Ouput Pin ; I_xx... = Physical Input Pin ; D_xx... = CAN Network Signal from the HVAC control Head ; B_xx.. = Multiplex system global Network Variable

Module.Pin#	Signal name	Description	Page	Connected devices	Input involved		
A54.J1:8	O_PasHeatSol	Passenger Heat Solenoid Valve	18.2	So13:1	B_BatterySaver	.	
					B_EngineRun	.	
					B_OneAltCharging	.	
					B_TestMode	.	
					B_TstModHvac	.	
					B_TstModSAC	.	
					D_AuxFanSpdBit0	.	
					D_AuxFanSpdBit1	.	
					D_AuxFanSpdBit2	.	
					D_DriverSetPts	.	
					D_DrvFnSpdBit0	.	
					D_DrvFnSpdBit1	.	
					D_DrvFnSpdBit2	.	
					D_OnOffPassSw	.	
					D_PassSetPts	.	
					I_BatMonMod54	A54.J1:24	6.1
					I_DefrostHighSw	A47.J1:10	18.1
					I_DefrostLowSw	A47.J1:12	18.1
					I_FireExt1stAl	A36.JB:23	
					I_FireExt2ndAlm	A44.J1:10	
					I_FireSensorA36	A41.J1:10	9.1
					I_FrontOutTemp	A47.J1:14	18.3
					I_OutDoorTempSe	A54.J1:14	18.1
A55.J1:12	O_JacobBrk1	Jacob Brake 1	38.1		I_RetarderSel	A55.J1:10	12.1
A55.J1:13	O_SunVisorDown		38.1		I_VIPSteerWh1	A55.J1:3	38.1
					I_VIPSteerWh2	A55.J1:4	38.1
					I_VIPSteerWh5V	A55.J1:2	38.1
A55.J1:14	O_JacobBrk2	Jacob Brake 2	38.1		I_RetarderSel	A55.J1:10	12.1
A55.J1:30	O_SunVisrDrvPass		38.1	R45:86	I_VIPSteerWh1	A55.J1:3	38.1
					I_VIPSteerWh2	A55.J1:4	38.1
					I_VIPSteerWh5V	A55.J1:2	38.1
A56.J1:1	O_SldO1MoSpeedA	Slide-Out 1 Motor Speed Control A	20.1		I_BatMonMod56	A56.J1:24	6.1
					I_SldO1CloseSw	A56.J1:10	20.1
					I_SldO1LimiOutSw	A56.J1:14	20.1
					I_SldO1LimitInSe	A56.J1:11	20.1
					I_SldO1OpenSw	A56.J1:9	20.1
					I_SldO1PBrakeSw	A56.J1:12	20.1
					I_SldO1VacPrSe	A56.J1:13	20.1
A56.J1:2	O_SldO1MoSpeedB	Slide-Out 1 Motor Speed Control B	20.1		I_BatMonMod56	A56.J1:24	6.1
					I_SldO1CloseSw	A56.J1:10	20.1
					I_SldO1LimiOutSw	A56.J1:14	20.1
					I_SldO1LimitInSe	A56.J1:11	20.1
					I_SldO1OpenSw	A56.J1:9	20.1

MULTIPLEX OUTPUT LIST

O_xx... = Physical Ouput Pin ; I_xx... = Physical Input Pin ; D_xx... = CAN Network Signal from the HVAC control Head ; B_xx.. = Multiplex system global Network Variable

Module.Pin#	Signal name	Description	Page	Connected devices	Input involved		
A56.J1:2	O_SldO1MoSpeedB	Slide-Out 1 Motor Speed Control B	20.1		I_SldO1PBrakeSw	A56.J1:12	20.1
					I_SldO1VacPrSe	A56.J1:13	20.1
A56.J1:20	O_SldO1Motpos	Slide_Out 1 Motor +	20.1	RSo1.B:1	I_BatMonMod56	A56.J1:24	6.1
					I_SldO1CloseSw	A56.J1:10	20.1
					I_SldO1LimiOutSw	A56.J1:14	20.1
					I_SldO1LimitInSe	A56.J1:11	20.1
					I_SldO1OpenSw	A56.J1:9	20.1
					I_SldO1PBrakeSw	A56.J1:12	20.1
					I_SldO1VacPrSe	A56.J1:13	20.1
A56.J1:21	O_SldO1SecuPinSo	Slide-Out 1 Security Pins	20.1	SOSO4:1	I_SldO1LimitInSe	A56.J1:11	20.1
					I_SldO1PBrakeSw	A56.J1:12	20.1
					I_SldO2LimitInSe	A57.J1:11	20.1
					I_SldO2PBrakeSw	A57.J1:12	20.1
					I_SldO3LimitInSe	A58.J1:11	20.2
					I_SldO3PBrakeSw	A58.J1:12	20.2
A56.J1:3	O_SldO1RemoteLed	Slide_Out 1 Remote Led	20.1	SwSo1.A:2	I_BatMonMod56	A56.J1:24	6.1
					I_SldO1CloseSw	A56.J1:10	20.1
					I_SldO1LimiOutSw	A56.J1:14	20.1
					I_SldO1LimitInSe	A56.J1:11	20.1
					I_SldO1OpenSw	A56.J1:9	20.1
					I_SldO1PBrakeSw	A56.J1:12	20.1
					I_SldO1Supply5v	A56.J1:15	20.1
					I_SldO1VacPrSe	A56.J1:13	20.1
A56.J1:4	O_SldO1SealInfSo	Slide_Out 1 Seal Inflating Valve	20.1	SoSo5:1	I_SldO1CloseSw	A56.J1:10	20.1
					I_SldO1LimiOutSw	A56.J1:14	20.1
					I_SldO1LimitInSe	A56.J1:11	20.1
					I_SldO1OpenSw	A56.J1:9	20.1
A56.J1:5	O_SldO1SealDefSo	Slide_Out 1 Seal Deflating Valve	20.1	SoSo1:1	I_BatMonMod56	A56.J1:24	6.1
					I_SldO1CloseSw	A56.J1:10	20.1
					I_SldO1LimiOutSw	A56.J1:14	20.1
					I_SldO1LimitInSe	A56.J1:11	20.1
					I_SldO1OpenSw	A56.J1:9	20.1
					I_SldO1PBrakeSw	A56.J1:12	20.1
A56.J1:6	O_SldO1VaccGenSo	Slide_Out 1 Seal Vaccum Generator	20.1	SoSo2:1	I_BatMonMod56	A56.J1:24	6.1
					I_BatMonMod57	A57.J1:24	6.1
					I_BatMonMod58	A58.J1:24	6.1
					I_SldO1CloseSw	A56.J1:10	20.1
					I_SldO1LimiOutSw	A56.J1:14	20.1
					I_SldO1LimitInSe	A56.J1:11	20.1
					I_SldO1OpenSw	A56.J1:9	20.1
					I_SldO1PBrakeSw	A56.J1:12	20.1
					I_SldO2CloseSw	A57.J1:10	20.1
					I_SldO2LimiOutSw	A57.J1:14	20.1

MULTIPLEX OUTPUT LIST

O_xx... = Physical Ouput Pin ; I_xx... = Physical Input Pin ; D_xx... = CAN Network Signal from the HVAC control Head ; B_xx.. = Multiplex system global Network Variable

Module.Pin#	Signal name	Description	Page	Connected devices	Input involved		
A56.J1:6	O_SldO1VaccGenSo	Slide_Out 1 Seal Vaccum Generator	20.1	SoSo2:1	I_SldO2LimitInSe	A57.J1:11	20.1
					I_SldO2OpenSw	A57.J1:9	20.1
					I_SldO2PBrakeSw	A57.J1:12	20.1
					I_SldO3CloseSw	A58.J1:10	20.2
					I_SldO3LimiOutSw	A58.J1:14	20.2
					I_SldO3LimitInSe	A58.J1:11	20.2
					I_SldO3OpenSw	A58.J1:9	20.2
					I_SldO3PBrakeSw	A58.J1:12	20.2
A56.J1:7	O_SldO1Motneg	Slide_Out 1 Motor -	20.1	RSo2.B:1	I_BatMonMod56	A56.J1:24	6.1
					I_SldO1CloseSw	A56.J1:10	20.1
					I_SldO1LimiOutSw	A56.J1:14	20.1
					I_SldO1LimitInSe	A56.J1:11	20.1
					I_SldO1OpenSw	A56.J1:9	20.1
					I_SldO1PBrakeSw	A56.J1:12	20.1
					I_SldO1VacPrSe	A56.J1:13	20.1
A57.J1:1	O_SldO2MoSpeedA	Slide-Out 2 Motor Speed Control A	20.1		I_BatMonMod57	A57.J1:24	6.1
					I_SldO1VacPrSe	A56.J1:13	20.1
					I_SldO2CloseSw	A57.J1:10	20.1
					I_SldO2LimiOutSw	A57.J1:14	20.1
					I_SldO2LimitInSe	A57.J1:11	20.1
					I_SldO2OpenSw	A57.J1:9	20.1
					I_SldO2PBrakeSw	A57.J1:12	20.1
A57.J1:2	O_SldO2MoSpeedB	Slide-Out 2 Motor Speed Control B	20.1		I_BatMonMod57	A57.J1:24	6.1
					I_SldO1VacPrSe	A56.J1:13	20.1
					I_SldO2CloseSw	A57.J1:10	20.1
					I_SldO2LimiOutSw	A57.J1:14	20.1
					I_SldO2LimitInSe	A57.J1:11	20.1
					I_SldO2OpenSw	A57.J1:9	20.1
					I_SldO2PBrakeSw	A57.J1:12	20.1
A57.J1:20	O_SldO2Motpos	Slide_Out 2 Motor +	20.1	RSo3.B:1	I_BatMonMod57	A57.J1:24	6.1
					I_SldO1VacPrSe	A56.J1:13	20.1
					I_SldO2CloseSw	A57.J1:10	20.1
					I_SldO2LimiOutSw	A57.J1:14	20.1
					I_SldO2LimitInSe	A57.J1:11	20.1
					I_SldO2OpenSw	A57.J1:9	20.1
					I_SldO2PBrakeSw	A57.J1:12	20.1
A57.J1:3	O_SldO2RemoteLed	Slide_Out 2 Remote Led	20.1	SwSo2:2	I_BatMonMod57	A57.J1:24	6.1
					I_SldO1VacPrSe	A56.J1:13	20.1
					I_SldO2CloseSw	A57.J1:10	20.1
					I_SldO2LimiOutSw	A57.J1:14	20.1
					I_SldO2LimitInSe	A57.J1:11	20.1
					I_SldO2OpenSw	A57.J1:9	20.1
					I_SldO2PBrakeSw	A57.J1:12	20.1

MULTIPLEX OUTPUT LIST

O_xx... = Physical Ouput Pin ; I_xx... = Physical Input Pin ; D_xx... = CAN Network Signal from the HVAC control Head ; B_xx.. = Multiplex system global Network Variable

Module.Pin#	Signal name	Description	Page	Connected devices	Input involved		
A57.J1:3	O_SldO2RemoteLed	Slide_Out 2 Remote Led	20.1	SwSo2:2	I_SldO2Supply5v	A57.J1:15	20.1
A57.J1:4	O_SldO2SealInfSo	Slide_Out 2 Seal Inflating Valve	20.1		I_SldO2CloseSw	A57.J1:10	20.1
					I_SldO2LimiOutSw	A57.J1:14	20.1
					I_SldO2LimitInSe	A57.J1:11	20.1
					I_SldO2OpenSw	A57.J1:9	20.1
A57.J1:5	O_SldO2SealDefSo	Slide_Out 2 Seal Deflating Valve	20.1	SoSo3:1	I_BatMonMod57	A57.J1:24	6.1
					I_SldO2CloseSw	A57.J1:10	20.1
					I_SldO2LimiOutSw	A57.J1:14	20.1
					I_SldO2LimitInSe	A57.J1:11	20.1
					I_SldO2OpenSw	A57.J1:9	20.1
					I_SldO2PBrakeSw	A57.J1:12	20.1
A57.J1:7	O_SldO2Motneg	Slide_Out 2 Motor -	20.1	RSo4.B:1	I_BatMonMod57	A57.J1:24	6.1
					I_SldO1VacPrSe	A56.J1:13	20.1
					I_SldO2CloseSw	A57.J1:10	20.1
					I_SldO2LimiOutSw	A57.J1:14	20.1
					I_SldO2LimitInSe	A57.J1:11	20.1
					I_SldO2OpenSw	A57.J1:9	20.1
					I_SldO2PBrakeSw	A57.J1:12	20.1
A58.J1:1	O_SldO3MoSpeedA		20.2		I_BatMonMod58	A58.J1:24	6.1
					I_SldO1VacPrSe	A56.J1:13	20.1
					I_SldO3CloseSw	A58.J1:10	20.2
					I_SldO3LimiOutSw	A58.J1:14	20.2
					I_SldO3LimitInSe	A58.J1:11	20.2
					I_SldO3OpenSw	A58.J1:9	20.2
					I_SldO3PBrakeSw	A58.J1:12	20.2
A58.J1:2	O_SldO3MoSpeedB		20.2		I_BatMonMod58	A58.J1:24	6.1
					I_SldO1VacPrSe	A56.J1:13	20.1
					I_SldO3CloseSw	A58.J1:10	20.2
					I_SldO3LimiOutSw	A58.J1:14	20.2
					I_SldO3LimitInSe	A58.J1:11	20.2
					I_SldO3OpenSw	A58.J1:9	20.2
					I_SldO3PBrakeSw	A58.J1:12	20.2
A58.J1:20	O_SldO3Motpos		20.2	RSo5.B:1	I_BatMonMod58	A58.J1:24	6.1
					I_SldO1VacPrSe	A56.J1:13	20.1
					I_SldO3CloseSw	A58.J1:10	20.2
					I_SldO3LimiOutSw	A58.J1:14	20.2
					I_SldO3LimitInSe	A58.J1:11	20.2
					I_SldO3OpenSw	A58.J1:9	20.2
					I_SldO3PBrakeSw	A58.J1:12	20.2
A58.J1:3	O_SldO3RemoteLed		20.2	SwSo3:2	I_BatMonMod58	A58.J1:24	6.1
					I_SldO1VacPrSe	A56.J1:13	20.1
					I_SldO3CloseSw	A58.J1:10	20.2
					I_SldO3LimiOutSw	A58.J1:14	20.2

MULTIPLEX OUTPUT LIST

O_xx... = Physical Ouput Pin ; I_xx... = Physical Input Pin ; D_xx... = CAN Network Signal from the HVAC control Head ; B_xx.. = Multiplex system global Network Variable

Module.Pin#	Signal name	Description	Page	Connected devices	Input involved		
A58.J1:3	O_SldO3RemoteLed		20.2	SwSo3:2	I_SldO3LimitInSe	A58.J1:11	20.2
					I_SldO3OpenSw	A58.J1:9	20.2
					I_SldO3PBrakeSw	A58.J1:12	20.2
					I_SldO3Supply5v	A58.J1:15	20.2
A58.J1:4	O_SldO3SealInfSo		20.2		I_SldO3CloseSw	A58.J1:10	20.2
					I_SldO3LimiOutSw	A58.J1:14	20.2
					I_SldO3LimitInSe	A58.J1:11	20.2
					I_SldO3OpenSw	A58.J1:9	20.2
A58.J1:5	O_SldO3SealDefSo		20.2		I_BatMonMod58	A58.J1:24	6.1
					I_SldO3CloseSw	A58.J1:10	20.2
					I_SldO3LimiOutSw	A58.J1:14	20.2
					I_SldO3LimitInSe	A58.J1:11	20.2
					I_SldO3OpenSw	A58.J1:9	20.2
					I_SldO3PBrakeSw	A58.J1:12	20.2
A58.J1:7	O_SldO3Motneg		20.2	RSo6.B:1	I_BatMonMod58	A58.J1:24	6.1
					I_SldO1VacPrSe	A56.J1:13	20.1
					I_SldO3CloseSw	A58.J1:10	20.2
					I_SldO3LimiOutSw	A58.J1:14	20.2
					I_SldO3LimitInSe	A58.J1:11	20.2
					I_SldO3OpenSw	A58.J1:9	20.2
					I_SldO3PBrakeSw	A58.J1:12	20.2

MULTIPLEX INTPUT LIST

O_xx... = Physical Ouput Pin ; I_xx... = Physical Input Pin ; D_xx... = CAN Network Signal from the HVAC control Head ; B_xx.. = Multiplex system global Network Variable

Module.Pin#	Signal name	Description	Page	Connected devices
.	I_LwWipSpd2Sw			
A36.JB:11	I_InputTest		9.1	Sw13:3
A36.JB:13	I_BrkLtSeFrSig	Brake Lights Sensor	12.1	
A36.JB:14	I_EngFanSw	Radiator Fan Switch		
A36.JB:2	I_IgnKeySw	Ignition Key switch	3.2	
A36.JB:21	I_RrCutOutSw	Rear Junction Box CutOut Switch	3.2	
A36.JB:22	I_FrEngStaSw	Front Engine Start Switch	3.2	
A36.JB:23	I_FireExt1stAl			
A36.JB:4	I_HazardSw	Hazard Switch	26.1	Sw4:3
A36.JB:5	I_WakeUp	Wake up signal (Fire alarm, horn, keyless module)	9.1	A41.J1:16
A36.JB:6	I_AccKeySw	Accessories Key switch	3.2	
A36.JB:9	I_ParkBrSe	Paking Brake Sensor	12.1	
A41.J1:10	I_FireSensorA36	Fire Sensor On A36	9.1	
A41.J1:17	I_LugDorLkSw	Luggage Door Lock Switch	33.1	
A41.J1:18	I_KeylessLuggUnl	Keyless luggages doors unlock signal	29.1	A31.B:11
A41.J1:19	I_KeylessLockAll	Keyless lock all doors signal	29.1	A31.B:22
A41.J1:2	I_DrvLtSw	Driver Light Switch	19.1	Sw24:3
A41.J1:20	I_LugDorULkSw	Luggage Door Unlock Switch	33.1	
A41.J1:21	I_KeylessEntReq		29.1	A31.B:10
A41.J1:3	I_HornSw	Horn Switch	9.1	
A41.J1:4	I_KeylessDrUnl	Keyless door unlock signal	29.1	A31.A:1
A41.J1:5	I_EntDorOpSe	Entrance Door Open Sensor	29.1	D73:A
A41.J1:6	I_KeylessPanic	Keyless panic button signal	29.1	A31.B:8
A41.J1:7	I_KeylessIntru	Keyless intrusion signal	29.1	A31.B:9
A41.J1:8	I_EntDrUnlockSw	Entrance door unlock switch	29.1	
A41.J1:9	I_EntDorLockSw	VIP Entrance Door Lock Switch	29.1	Sw104:6
A42.J1:18	I_EngBrOnSe	Engine Brake ACTIVE Sensor		
A42.J1:5	I_EtherSw	Ether Switch	13.1	Sw23:3
A42.J1:7	I_LevelLowSw	Level low switch	32.1	
A42.J1:8	I_LwWipIntSw	Lower Wiper Intermitant Switch	34.1	Sw1.C258:7
A42.J1:9	I_StopEngSe	Stop Engine Sensor		
A43.J1:20	I_BlinkSw	Courtesy Blink Switch	26.1	Sw1.C258:5
A43.J1:3	I_HiBeamCallSw	Hi/Low Beam Switch	26.1	Sw1.C259:4
A43.J1:4	I_HdLtPos1Sw	Head Light Switch Position Markers	26.1	
A43.J1:6	I_RevAlrmSw	Reverse alarm switch	26.3	
A43.J1:7	I_HornSelectSw	Horn Select switch	9.1	Sw63A:3
A43.J1:8	I_HdLtHiLowBmSw	Head Lights High and Low Beam Switch	26.1	Sw1.C258:8
A44.J1:10	I_FireExt2ndAlm			
A45.J1:12	I_HdLtPos2SwLH	Head Light Switch Beam Position 2 LH	26.1	
A45.J1:9	I_LHFlshSw	Left Hand Flasher Switch	26.1	
A46.J1:24	I_BatMonMod46		6.1	A46.J1:26
A46.J1:9	I_LwWshSw	Lower Wiper Washer Switch	34.1	Sw1.C258:6
A47.J1:10	I_DefrostHighSw	Passenger defrost speed increase switch	18.1	Sw122:3

MULTIPLEX INTPUT LIST

O_xx... = Physical Ouput Pin ; I_xx... = Physical Input Pin ; D_xx... = CAN Network Signal from the HVAC control Head ; B_xx.. = Multiplex system global Network Variable

Module.Pin#	Signal name	Description	Page	Connected devices
A47.J1:11	I_CoilTherSe	Coil sensing thermostat	18.3	Se52.A:1
A47.J1:12	I_DefrostLowSw	Passenger defrost speed decrease switch	18.1	Sw122:4
A47.J1:14	I_FrontOutTemp	Front outside temperature sensor	18.3	Se50:B
A47.J1:24	I_BatMonMod47		6.1	A47.J1:27
A48.J1:10	I_HdLtPos2SwRH	Head Light Switch Beam Position 2 RH	26.1	
A48.J1:12	I_RHFlshSw	Right Hand Flasher Switch	26.1	
A48.J1:9	I_EntDrUnSw	Entrance door unlock switch	29.1	D56:A, D56:B
A49.J1:3	I_AcDorOpSe	Condensor Door Open Switch	25.1	
A49.J1:5	I_LuggDrUnSe	Luggages doors unlock sensor	24.1	Sw118:2
A49.J1:9	I_Alt2Voltage		3.2	
A50.J1:11	I_NeutralSe	Neutral Signal Sensor	15.1	A1Gen4.A:41
A50.J1:12	I_RetdrSig	Retarder Signal	15.1	A1Gen4.A:24
A51.J1:10	I_BrkLtSeRrSig	Brake Lights Sensor	12.1	
A51.J1:12	I_RHFlshSwRrSig	RH FlasherSwitch Rear Signal	26.2	
A51.J1:9	I_LHFlshSwRrSig	LH FlasherSwitch Rear Signal	26.2	
A52.J1:10	I_EngFanSpd2	Engine Fan Signal Speed 2	13.1	A73.J2:9
A52.J1:11	I_EngCmptLtSw	Engine Compartiment Light Switch	25.1	Sw84.B:1
A52.J1:12	I_EngDoorSe	Engine Door Sensor	25.1	
A52.J1:13	I_AcPresHiSSe	Ac Pressure High Side Sensor	18.2	Se23:C
A52.J1:14	I_AcPresLoSSe	Ac Pressure Low Side Sensor	18.2	Se24:C
A52.J1:9	I_EngFanSpd1	Engine Fan Signal Speed 1	13.1	A73.J2:10
A53.J1:10	I_RrStrtEnSw	Rear Start Enable Switch	3.2	
A53.J1:11	I_EngStaRrSw	Engine Start Rear Switch	3.2	Sw59:2
A53.J1:12	I_StartLockOut			
A53.J1:24	I_BatMonMod53		6.1	A53.J1:26
A53.J1:9	I_FrStrtEnSw	Front Start Enable Switch	3.2	Sw58:3
A54.J1:14	I_OutDoorTempSe	Outside Temperature Sensor	18.1	Se20:B
A54.J1:24	I_BatMonMod54		6.1	A54.J1:29
A55.J1:1	I_DrvTempSe	Driver Temperature sensor	18.1	Se21:2
A55.J1:10	I_RetarderSel	Retarder Selected	12.1	Sw16:3
A55.J1:17	I_BackUpCamSw	Back up camera switch	28.1	Sw119:3
A55.J1:18	I_HeadLmpWshSw		34.1	Sw6:4
A55.J1:19	I_UpWshSw	Upper Washer Wiper Switch	34.1	Sw6:3
A55.J1:2	I_VIPSteerWh5V		38.1	
A55.J1:20	I_UpWipIntSw	Upper Wiper Intermitant Switch	34.1	
A55.J1:21	I_UpWipSw	Upper Wiper Switch	34.1	Sw5:6
A55.J1:3	I_VIPSteerWh1		38.1	A20.A:1
A55.J1:4	I_VIPSteerWh2		38.1	A20.A:2
A55.J1:6	I_FogLightSw	Fog Lights Switch	26.3	Sw3:3
A55.J1:7	I_CorneringLtSw	Cornering Light Switch	26.3	Sw99:3
A55.J1:8	I_DockingLtSw	Docking Lights Switch	26.3	Sw99:1
A55.J1:9	I_LowDockLtsSw	Low docking lights switch	26.3	Sw102:3
A56.J1:10	I_SldO1CloseSw	Slide-Out 1 Close Sw	20.1	SwSo1.A:4

MULTIPLEX INTPUT LIST

O_xx... = Physical Ouput Pin ; I_xx... = Physical Input Pin ; D_xx... = CAN Network Signal from the HVAC control Head ; B_xx.. = Multiplex system global Network Variable

Module.Pin#	Signal name	Description	Page	Connected devices
A56.J1:11	I_SldO1LimitInSe	Slide-Out 1 Limit In Detection Sw	20.1	SESO2:2
A56.J1:12	I_SldO1PBrakeSw	Slide-Out 1 Parking Brake Sw	20.1	
A56.J1:13	I_SldO1VacPrSe	Slide-Out 1 Vaccum Pressure Transducer	20.1	SESO1:C
A56.J1:14	I_SldO1LimiOutSw	Slide-Out 1 Limit Out Detection Sw	20.1	SESO3:2
A56.J1:15	I_SldO1Supply5v	Slide Out 1 5v Supply	20.1	
A56.J1:24	I_BatMonMod56		6.1	A56.J1:27
A56.J1:9	I_SldO1OpenSw	Slide-Out 1 Open Sw	20.1	SwSo1.A:5
A57.J1:10	I_SldO2CloseSw	Slide-Out 2 Close Sw	20.1	SwSo2:4
A57.J1:11	I_SldO2LimitInSe	Slide-Out 2 Limit In Detection Sw	20.1	SESO5:2
A57.J1:12	I_SldO2PBrakeSw	Slide-Out 2 Parking Brake Sw	20.1	
A57.J1:14	I_SldO2LimiOutSw	Slide-Out 2 Limit Out Detection Sw	20.1	SESO6:2
A57.J1:15	I_SldO2Supply5v	Slide Out 2 5v Supply	20.1	
A57.J1:24	I_BatMonMod57		6.1	A57.J1:29
A57.J1:9	I_SldO2OpenSw	Slide-Out 2 Open Sw	20.1	SwSo2:5
A58.J1:10	I_SldO3CloseSw		20.2	SwSo3:4
A58.J1:11	I_SldO3LimitInSe		20.2	SeSo7:2
A58.J1:12	I_SldO3PBrakeSw		20.2	
A58.J1:14	I_SldO3LimiOutSw		20.2	SeSo8:2
A58.J1:15	I_SldO3Supply5v	Slide Out 3 Power Supply	20.2	
A58.J1:24	I_BatMonMod58		6.1	A58.J1:26
A58.J1:9	I_SldO3OpenSw		20.2	SwSo3:5

MULTIPLEX ERROR MESSAGES LIST

FMI 3 = Shorted High ; FMI 4 = Shorted Low ; FMI 5 = Open Circuit ; FMI 6 = Current above Normal

Cluster message	SID/PSID	FMI	Module.Pin#	Page	Cluster message	SID/PSID	FMI	Module.Pin#	Page
A/C Clutch SO9	PSID #4	3, 4, 5, 6	A52.J1:20	18.2	Flash RH SW1	PSID #133	3, 4	A48.J1:12	26.1
A/C Pres HiSd SE23	PSID #28	3, 4	A52.J1:13	18.2	Flasher LH Sw1	PSID #130	3, 4	A45.J1:9	26.1
A/C Pres LoSd SE24	PSID #29	3, 4	A52.J1:14	18.2	Flsh Audibl Rly R16	PSID #37	3, 4, 5, 6	A45.J1:8	26.1
Aux AC fan Mo51	SID #39	3, 4, 6	A46.J1:1	18.3	Fog's Lights LH L95	PSID #134	3, 4, 6	A45.J1:4	26.3
Aux Refr sol So38	SID #46	3, 4, 6	A46.J1:8	18.3	Fog's lights RH L96	PSID #136	3, 4, 6	A48.J1:8	26.3
Backup Light & Alm	PSID #167	3, 4, 6	A50.J1:20	26.3	Foot trap Mo4	PSID #14	3, 4, 6	A45.J1:2	18.1
Blinker SW1	PSID #139	3, 4	A43.J1:20	26.1	FR Clearance lights	PSID #137	3, 4, 6	A44.J1:8	26.1
Brk Lts Sens SE19	PSID #119	3, 4	A36.JB:13	12.1	Fr Flsh-Mkr LH L62	PSID #128	3, 4, 6	A45.J1:3	26.1
Center Flash LH L70	PSID #124	3, 4, 6	A50.J1:5	26.2	Fr Side Flsh RH L64	PSID #10	3, 4, 6	A48.J1:20	26.1
Center Flash RH L68	PSID #125	3, 4, 6	A50.J1:7	26.2	Fr Start SW83	PSID #58	3, 4	A36.JB:22	3.2
Center Mkr L67-L70	PSID #27	3, 4, 6	A50.J1:8	26.2	Front Flash RH L61	PSID #126	3, 4, 6	A48.J1:6	26.1
Cond Rly spd1 R10	PSID #41	3, 4, 5, 6	A54.J1:5	18.2	FrontMkr Lts LH L62	PSID #148	3, 4, 6	A45.J1:21	26.1
Cond Rly spd2 R9	PSID #42	3, 4, 5, 6	A54.J1:1	18.2	FrontMkr Lts RH L61	PSID #149	3, 4, 6	A48.J1:7	26.1
Condensor Door Sw7	PSID #7	3, 4	A49.J1:3	25.1	FrStart Enable SW58	PSID #56	3, 4	A53.J1:9	3.2
Cornering Dash Sw30	PSID #200	3, 4	A55.J1:7	26.3	Hazard Switch Sw4	PSID #138	3, 4	A36.JB:4	26.1
Cyclope Lt L81	PSID #116	3, 4, 6	A51.J1:7	26.2	Hd Light Call SW1	PSID #140	3, 4	A43.J1:3	26.1
Defr water Pmp Mo50	SID #41	3, 4	A47.J1:20	18.3	HdLamp Wsh Pmp Mo54	SID #48	3, 4, 6	A46.J1:21	34.1
Diff Lock sol So35	SID #36	3, 4, 6	A52.J1:4	37.1	Head Lights Pos1SW2	PSID #143	3, 4	A43.J1:4	26.1
Docking Dash Sw31	PSID #3	3, 4	A55.J1:8	26.3	Head Lt Sw Pos2 Sw2	PSID #11	3, 4	A45.J1:12	26.1
Driver Def Fan L198	PSID #180	3, 4, 5, 6	A47.J1:1	18.1	Hi Low Beam Sw1	PSID #6	3, 4	A43.J1:8	26.1
Driver heat Sol SO8	PSID #16	3, 4, 5, 6	A46.J1:6	18.1	High Beam LH L60	PSID #141	3, 4, 5, 6	A45.J1:6	26.1
Driver Light L16	PSID #104	3, 4, 5, 6	A47.J1:6	19.1	High Beam RH L59	PSID #145	3, 4, 5, 6	A48.J1:3	26.1
Driver Light SW24	PSID #105	3, 4	A41.J1:2	19.1	LH Corner Lts L97	PSID #120	3, 4, 5, 6	A45.J1:5	26.3
Driver Rfg Sol SO7	PSID #13	3, 4, 5, 6	A46.J1:5	18.1	LH Docking LightL93	PSID #122	3, 4, 5, 6	A51.J1:4	26.3
Driver Sensor SE21	PSID #12	3, 4, 5	A55.J1:1	18.1	Low Beam LH L60	PSID #142	3, 4, 6	A45.J1:7	26.1
Drv air Trap MO3	PSID #5	3, 4, 6	A44.J1:2	18.1	Low Beam RH L59	PSID #146	3, 4, 6	A48.J1:4	26.1
Drv Rec Cylind L203	PSID #30	3, 4, 5, 6	A47.J1:2	18.1	Low Wip Spd1 Mo22	PSID #184	3, 4, 5, 6	A47.J1:3	34.1
Elec Horn L185 L186	PSID #83	3, 4, 6	A43.J1:13	9.1	Lower Stop Lamps	PSID #153	3, 4, 6	A50.J1:6	26.2
Elec.Horn SW61 SW62	PSID #82	4	A41.J1:3	9.1	Lower Washer pmp	PSID #181	4, 6	A46.J1:3	34.1
Emergency Relay R21	PSID #44	3, 4, 5, 6	A36.JA:24	3.2	Lower Washer SW1	PSID #188	3, 4	A46.J1:9	34.1
Eng Brk Active Sig	PSID #45	3, 4	A42.J1:18		Lower Wip Int SW1	PSID #183	3, 4	A42.J1:8	34.1
Eng Cmpt Bulb L173	PSID #106	3, 4, 5, 6	A52.J1:5	25.1	Lugg doors lock R30	SID #44	3, 4, 5, 6	A36.JA:7	33.1
Eng Cmpt Sw	PSID #107	3, 4	A52.J1:11	25.1	Lugg doors unl R32	SID #45	3, 4, 5, 6	A36.JA:6	33.1
Eng Ether SW23	PSID #50	3, 4	A42.J1:5	13.1	OutDoor Sens SE20	PSID #161	3, 4, 5	A54.J1:14	18.1
Eng Fan Dash SW22	PSID #55	3, 4	A36.JB:14		Park brak Sens Se18	PSID #162	3, 4	A36.JB:9	12.1
Eng Fan Spd1 Req	PSID #51	3, 4	A52.J1:9	13.1	Pass def fan Mo25	SID #38	3, 4, 5, 6	A47.J1:7	18.1
Eng Fan Spd2 Req	PSID #52	3, 4	A52.J1:10	13.1	Pass Heat Sol SO13	PSID #24	3, 4, 6	A54.J1:8	18.2
Eng. Ether Sol SO1	PSID #49	3, 4, 6	A52.J1:6	13.1	Pass Rfg Sol SO11	PSID #23	3, 4, 5, 6	A54.J1:3	18.2
Engine Fan Spd1 MO2	PSID #53	3, 4, 5, 6	A52.J1:1	13.1	Pass. Wtr pump MO12	PSID #17	4, 6	A54.J1:4	18.2
Engine Fan Spd2 MO2	PSID #54	3, 4, 5, 6	A52.J1:2	13.1	Rear CutOut Sw82	PSID #18	3, 4	A36.JB:21	3.2
Evap Motor Rly R12	PSID #77	3, 4, 5, 6	A54.J1:7	18.2	RearFlsh LH L71 L75	PSID #131	3, 4, 6	A51.J1:21	26.2
Evap Spd Ctrl MO9	PSID #78	4, 6	A54.J1:2	18.2	RearFlsh RH L73 L76	PSID #132	3, 4, 6	A51.J1:3	26.2
Fire Sensor	PSID #79	3, 4	A41.J1:10	9.1	Retarder signal	PSID #164	3, 4	A50.J1:12	15.1

MULTIPLEX ERROR MESSAGES LIST

FMI 3 = Shorted High ; FMI 4 = Shorted Low ; FMI 5 = Open Circuit ; FMI 6 = Current above Normal

Cluster message	SID/PSID	FMI	Module.Pin#	Page					
Rev lights L91 L92	SID #43	3, 4, 5, 6	A50.J1:3	26.3					
RH Corner Light L98	PSID #121	3, 4, 5, 6	A48.J1:5	26.3					
RH Docking LightL94	PSID #123	3, 4, 5, 6	A51.J1:5	26.3					
RJB fan Mo53	SID #37	3, 4, 6	A53.J1:5	11.1					
Rr Clearance lights	PSID #151	3, 4, 6	A50.J1:4	26.2					
Rr Start SW59	PSID #59	3, 4	A53.J1:11	3.2					
RrStart Enable SW58	PSID #57	3, 4	A53.J1:10	3.2					
Ser Brake Trans A1	SID #49	3, 4, 6	A51.J1:1	15.1					
SldO 5v supply	SID #23	3, 4	A56.J1:15	20.1					
SldO Close Sw	SID #18	3, 4	A56.J1:10	20.1					
SldO Limit In Se	SID #19	3, 4	A56.J1:11	20.1					
SldO Limit Out Se	SID #20	3, 4	A56.J1:14	20.1					
SldO Mot Neg Rly	SID #15	3, 4, 5, 6	A56.J1:7	20.1					
SldO Mot Pos Rly	SID #16	3, 4, 5, 6	A56.J1:20	20.1					
SldO Mot SpeedA Ctr	SID #9	3, 6	A56.J1:1	20.1					
SldO Mot SpeedB Ctr	SID #10	3, 6	A56.J1:2	20.1					
SldO Open Sw	SID #17	3, 4	A56.J1:9	20.1					
SldO Park Br Signal	SID #8	3, 4	A56.J1:12	20.1					
SldO Remote Led	SID #11	3, 4, 5, 6	A56.J1:3	20.1					
SldO Seal Def Sol	SID #13	3, 4, 5, 6	A56.J1:5	20.1					
SldO Seal Inf Sol	SID #12	3, 4, 5, 6	A56.J1:4	20.1					
SldO Secu Pin Sol	SID #21	3, 4, 5, 6	A56.J1:21	20.1					
SldO Vacc Gen Sol	SID #14	3, 4, 5, 6	A56.J1:6	20.1					
SldO Vacuum Sensor	SID #5	3, 4	A56.J1:13	20.1					
Starter Relay SO2	PSID #60	4, 6	A53.J1:6	3.2					
Starter Relay SO2	PSID #60	3, 6	A53.J1:1	3.2					
Stop Eng Signal In	PSID #62	3	A42.J1:9						
SunVisor RlyR41-R45	SID #54	3, 4, 5, 6	A55.J1:13	38.1					
Tail Lights	PSID #152	3, 4, 6	A51.J1:8	26.2					
Trans Neutral Sens	PSID #168	3, 4	A50.J1:11	15.1					
Under Floor lights	PSID #112	4, 6	A46.J1:20	25.1					
Unloader LH L200	PSID #31	3, 4, 6	A52.J1:8	18.2					
Unloader RH L199	PSID #32	3, 4, 6	A52.J1:21	18.2					
Upper Brk Lamp	PSID #43	3, 4, 6	A51.J1:6	26.2					
Upper Wash Pmp MO18	PSID #189	4, 6	A46.J1:4	34.1					
Upper Wash SW6	PSID #190	3, 4	A55.J1:19	34.1					
Upper Wiper Int SW5	PSID #191	3, 4	A55.J1:20	34.1					
Upper Wiper SW5	PSID #192	3, 4	A55.J1:21	34.1					
UpperWiper Mot MO21	PSID #193	3, 4, 6	A46.J1:2	34.1					

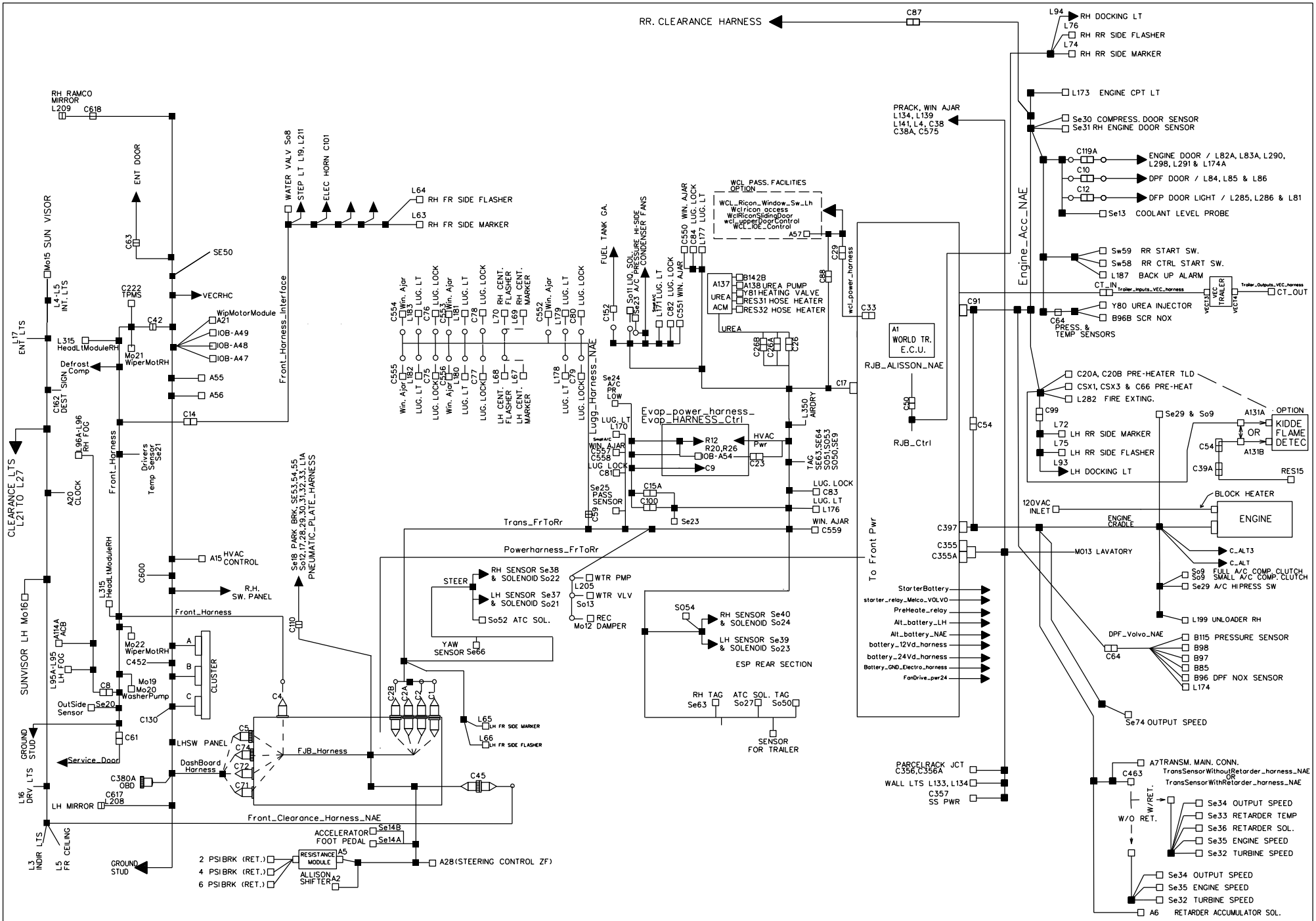

PREVOST	WIRING DIAGRAM	NO: D062140	PAGE: C	REVISION 0

DESCRIPTION	P9660
CHANGE ORDER	2018032
EFFECTIVE VEHICLE	R-1453
wiring revision	0
ACB_Gen2	0610245
Adaptor Phantom Feed - Radio Antenna	22480495
Adaptor Fakra to Motorola - Radio Antenna	901727
Antenna cable - AM/FM/DBA	901728
ailse_light_extension	idemX3_069424
AFSS Eberspasher Harness	0600144
AFSS ProHeat Harness	0600089
AirHorn_harness	idemX3_0610004
Aisle_lights_harness	0600110
Alt_battery_LH	060682
Alt_battery_LH_REMY	0610053
Alt_battery	060684
Alt_battery_REMY	0610052
Alt_chassis_GND	idemX3_060264
Alt_chassis_GND_REMY	0610034
Alt_Jumper_Power	idemX3_060265
Alt_LH_chassis_GND	idemX3_069504
Alt_LH_chassis_GND_REMY	0610035
Alternator_Ctrl_RH_harness_BOSCH	0600111
Alternator_Ctrl_RH_harness_REMY	0600113
Alternator_Ctrl_LH_harness_BOSCH	0600112
Alternator_Ctrl_LH_harness_REMY	0600114
Batt_charger_120V_inlet	0600155
Batt_charger_120V_Xantrex	0600133
battery_12Vd_harness	060686
battery_24Vd_harness	060691
Battery__Cable	062371
Battery_GND_Electro_harness	060693
Battery_Gnd_Harness	063592_microstation
Beru_antenna	idemX3_0610143
Beru_Fjb	idemX3_0610142
Brigade to infotainment harness	0610604
Bumper_Harness_Acb	0600026
Bumper_Harness_Acb_Fog	0600025
Cable adapteur 120v Pour conducteur	0600090
Comp_Bitzer	idemMth_061482
Comp_Bock	IDEM VIP0610550
Destination_Sign_Emergency_Sw124	IdemX3_069944
Destination_Sign_Front_To_Side	IdemX3_069941
Destination_Sign_Interconn_Side_Rear	IdemX3_069942
Destination_Sign_Interconnection	IdemX3_069940
Destination_Sign_Rear	IdemX3_069943

DESCRIPTION	P9660
CHANGE ORDER	2018032
EFFECTIVE VEHICLE	R-1453
wiring revision	0
booster_positive_Harness	060692
Cablage__ASM	061180_JPEG
Dash	0600007
Docking Cornering Sw.	0610012 / 066613 (SAV)
Entrance_Door_Harness	0600013
SCR Cmpt Clearance lights Harness	0600031
DPF_Door_light	0600046
DPF_Volvo	060746
Driver_120VAC_Outlet	Idem X3_0610152
electric_horn	0600018
Electronic Mirrors Harness	0610486
Eng_Cradle_Allisson	0600115
Eng_Cradle_Ishift	0600121
Engine_Acc	0600120
Engine_chassis_GND	IdemX3_060306
ENGINE_DOOR	060748
Engine_Block_Heater_Harness	Idem X3_0610126
equilizer_harness_Vanner	060855
Evap_HARNESS_Ctrl	060804
Evap_Power_GND_harness	idemX3_060527
Evap_power_harness_	IdemX3_060529
FanDrive_harness	IdemX3_068820
FanDrive_pwr24	idemX3_069245
FanDrive_pwrGnd	idemX3_069246
FJB	0600000
AFSS Pro-Heat interface	0600089
FJB_TransAlisson	0600003
FJB_TransIShift	0600021
Flame_Detector_Ext_Harness	061046
Front_Clearance_Harness	0600011
Front_flip_screen	IdemX3_060099
Front_Harness	0600001
Front_Harness_Interface	0600123
Fuel_gauge_harness	idemX3_060087
Indiv_Headset_Radios_PWR	401420
Inter_Batt_cable	061036
Interior_Light_access	0600009
INVerter_120Vac_LH (Option 1 inverter)	0600150
INVerter_120Vac_LH (Option 2 inverter)	0600147
INVerter_120Vac_RH	0600096
24V_Inverter_harness	0600137
InverterJonctionNegatif	060819

DESCRIPTION	P9660
CHANGE ORDER	2018032
EFFECTIVE VEHICLE	R-1453
wiring revision	0
InverterJonctionNegatif2	061149
InverterJonctionPositif	060019
ISM_RELAY_Prack	0610200
JUMPER_120VAC_WCL	068937
Jumper_Y_120Vac	068221
Lavatory	060833
Led Pied conducteur	0600078
LH_CONSOLE	Cancel
LH_Console Alisson	0600003
LH_Console I_Shift	0600021
ENGINE_LINEAR_THERMAL_Harness	0610154
Linear_thermal_WO_afss	idemH3_069175
Lugg_Harness_H341	0610010
Lugg_Harness_H345	0600051
Outlet_120vac_PRack X3_Seul	0600131
ParcelRackJB	0600029
Plug_for_2_sliding_seats	067984
Plug_for_3_sliding_seats	068321
Pneumatic_Plate_harness	0600020
Power_harness_ 45pi	0600014
Power_harness_ 41pi	0600017
Power_RH_Splitter_harness	060654
Power_Steering_Ctrl	0600015
PowerVecr	060870
PreHeate_relay	060872
PreHeater_GND	idemX3_060308
Preheater_Thermal_harness	idemX3_067676
Preheater_ON_W_Batt_Charger	idemX3_060092
Preheater_ON_W_HVAC	idemX3_060093
ProHeat_Interface	idemX3_060228
ProHeat_Timer_Harness	060016
Proheat_To_RJB_harness	0610115
RadiatorChassisGnd	idemX3_069279
Radiator door harness	061153
Reading_Light_RH_Standard	0600041
Reading_Light_LH_Standard	0600040
Rear_wheel_sub_harness	0610473
Relay_Melco_batt	idemX3_069542
Resistor for speakers impedence matching	0600088
RHC_PowerHarness	0600006
RJB_ALISSON	0600023
RJB_Ctrl	0600085

DESCRIPTION	P9660
CHANGE ORDER	2018032
EFFECTIVE VEHICLE	R-1453
wiring revision	0
RJB_ISHIFT	0600024
Rear_clearence_harness	0600030
RH modesty panel AV	0610605
Roof_Haches_W_Fan	0600108
Service_Door_Harness	0600012
Sound_System_AuxHarness	062817
Sound_System_Harness	062799
Sound_System_Prack_Harness	063106
Sound_system_pwr_harness	0600083
SpherosTimerHarness	0600089
Starter_chassis_GND	idemX3_060307
starter_relay_Melco_VOLVO	060711
StarterBattery	060712
SubWofferExtHarness	idemH3_066743
TPMS_antennas	0600008
Trailer_Inputs_VEC_harness	060722
Trailer_Outputs_VEC_harness	060723
Trans_Fr_to_Rr_H345	0600010
TransSensorWithoutRetarder_harness	IDEMX3_0610588
TransSensorWithRetarder_harness	IDEMX3_0610586
Stairs_UpperSection_Harness	0600032
Stairs_LowerSection_Harness	0600033
Urea_Harness	0610590
USB_5V_Harness	IdemX3_060660
USB_Ipod_harness	idemX3_901349
Wall_LedStrip_Ext_WCL	0600044
WCL_IOE_Control	0600117
wcl_power_harness	060728
Wcl Ricon Access	IdemCOM069744
Wcl ricon lighting	061248
WCL_RICON_Lighting_Jumper	069065
WCL_Ricon_Window_Sw_Lh	0600048
WCL_Ricon_Window_Sw_RH	0600050
wcl_upperDoorControl	0600080
WclRiconSlidingDoor	069992
wifi_system_gnd	idemX3_069925
Win_Ajar_FJB	idemX3_060574
Win_ajar_window_side_LH	see 0600083
Win_ajar_window_side_RH	see 0600084
Win_ajar_window_Ricon_RH	060757
Windshield_Washer_Harness	0600019
Wind Ajar, Curb Lights and câblage système de son LH	0600083
Wind Ajar, Curb Lights RH	0600084

DESCRIPTION	P9660	P9660
CHANGE ORDER	2018032	2022123
EFFECTIVE VEHICLE	R-1453	
wiring revision	0	6
ACB_Gen2	0610245	
Adaptor Phantom Feed - Radio Antenna	22480495	
Adaptor Fakra to Motorola - Radio Antenna	901727	
Antenna cable - AM/FM/DBA	901728	
ailse_light_extension	idemX3_069424	
AFSS Eberspasher Harness	0600144	
AFSS ProHeat Harness	0600089	
AirHorn_harness	idemX3_0610004	
Aisle_lights_harness	0600110	
Alt_battery_LH	060682	
Alt_battery_LH_REMY	0610053	
Alt_battery	060684	
Alt_battery_REMY	0610052	
Alt_chassis_GND	idemX3_060264	
Alt_chassis_GND_REMY	0610034	
Alt_Jumper_Power	idemX3_060265	
Alt_LH_chassis_GND	idemX3_069504	
Alt_LH_chassis_GND_REMY	0610035	
Alternator_Ctrl_RH_harness_BOSCH	0600111	
Alternator_Ctrl_RH_harness_REMY	0600113	
Alternator_Ctrl_LH_harness_BOSCH	0600112	
Alternator_Ctrl_LH_harness_REMY	0600114	
Batt_charger_120V_inlet	0600155	
Batt_charger_120V_Xantrex	0600133	
battery_12Vd_harness	060686	
battery_24Vd_harness	060691	
Battery__Cable	062371	
Battery_GND_Electro_harness	060693	
Battery_Gnd_Harness	063592_microstation	
Beru_antenna	idemX3_0610143	
Beru_Fjb	idemX3_0610142	
Brigade to infotainment harness	0610604	
Bumper_Harness_Acb	0600026	
Bumper_Harness_Acb_Fog	0600025	
Cable adapteur 120v Pour conducteur	0600090	
Comp_Bitzer	idemMth_061482	
Comp_Bock	IDEM VIP0610550	
Destination_Sign_Emergency_Sw124	IdemX3_069944	
Destination_Sign_Front_To_Side	IdemX3_069941	
Destination_Sign_Interconn_Side_Rear	IdemX3_069942	
Destination_Sign_Interconnection	IdemX3_069940	
Destination_Sign_Rear	IdemX3_069943	

DESCRIPTION	P9660	P9660
CHANGE ORDER	2018032	2022123
EFFECTIVE VEHICLE	R-1453	
wiring revision	0	6
booster_positive_Harness	060692	
Cablage__ASM	061180_JPEG	
Dash	0600007	
Docking Cornering Sw.	0610012 / 066613 (SAV)	
Entrance_Door_Harness	0600013	
SCR Cmpt Clearance lights Harness	0600031	
DPF_Door_light	0600046	
DPF_Volvo	060746	
Driver_120VAC_Outlet	Idem X3_0610152	
electric_horn	0600018	
Electronic Mirrors Harness	0610486	
Eng_Cradle_Allisson	0600115	
Eng_Cradle_Ishift	0600121	
Engine_Acc	0600120	
Engine_chassis_GND	IdemX3_060306	
ENGINE_DOOR	060748	
Engine_Block_Heater_Harness	Idem X3_0610126	
equilizer_harness_Vanner	060855	
Evap_HARNESS_Ctrl	060804	
Evap_Power_GND_harness	idemX3_060527	
Evap_power_harness_	IdemX3_060529	
FanDrive_harness	IdemX3_068820	
FanDrive_pwr24	idemX3_069245	
FanDrive_pwrGnd	idemX3_069246	
FJB	0600000	
AFSS Pro-Heat interface	0600089	
FJB_TransAlisson	0600003	
FJB_TransIShift	0600021	
Flame_Detector_Ext_Harness	061046	
Front_Clearance_Harness	0600011	
Front_flip_screen	IdemX3_060099	
Front_Harness	0600001	
Front_Harness_Interface	0600123	
Fuel_gauge_harness	idemX3_060087	
Indiv_Headset_Radios_PWR	401420	
Inter_Batt_cable	061036	
Interior_Light_access	0600009	
INVerter_120Vac_LH (Option 1 inverter)	0600150	
INVerter_120Vac_LH (Option 2 inverter)	0600147	
INVerter_120Vac_RH	0600096	
24V_Inverter_harness	0600137	
InverterJonctionNegatif	060819	

DESCRIPTION	P9660	P9660
CHANGE ORDER	2018032	2022123
EFFECTIVE VEHICLE	R-1453	
wiring revision	0	6
InverterJonctionNegatif2	061149	
InverterJonctionPositif	060019	
ISM_RELAY_Prack	0610200	
JUMPER_120VAC_WCL	068937	
Jumper_Y_120Vac	068221	
Lavatory	060833	
Led Pied conducteur	0600078	
LH_CONSOLE	Cancel	
LH_Console Alisson	0600003	
LH_Console I_Shift	0600021	
ENGINE_LINEAR_THERMAL_Harness	0610154	
Linear_thermal_WO_afss	idemH3_069175	
Lugg_Harness_H341	0610010	
Lugg_Harness_H345	0600051	
Outlet_120vac_PRack X3_Seul	0600131	
ParcelRackJB	0600029	
Plug_for_2_sliding_seats	067984	
Plug_for_3_sliding_seats	068321	
Pneumatic_Plate_harness	0600020	
Power_harness_ 45pi	0600014	
Power_harness_ 41pi	0600017	
Power_RH_Splitter_harness	060654	
Power_Steering_Ctrl	0600015	
PowerVecr	060870	
PreHeate_relay	060872	
PreHeater_GND	idemX3_060308	
Preheater_Thermal_harness	idemX3_067676	
Preheater_ON_W_Batt_Charger	idemX3_060092	
Preheater_ON_W_HVAC	idemX3_060093	
ProHeat_Interface	idemX3_060228	
ProHeat_Timer_Harness	060016	
Proheat_To_RJB_harness	0610115	
RadiatorChassisGnd	idemX3_069279	
Radiator door harness	061153	
Reading_Light_RH_Standard	0600041	
Reading_Light_LH_Standard	0600040	
Rear_wheel_sub_harness	0610473	
Relay_Melco_batt	idemX3_069542	
Resistor for speakers impedence matching	0600088	
RHC_PowerHarness	0600006	
RJB_ALISSON	0600023	0600334
RJB_Ctrl	0600085	

DESCRIPTION	P9660	P9660
CHANGE ORDER	2018032	2022123
EFFECTIVE VEHICLE	R-1453	
wiring revision	0	6
RJB_ISHIFT	0600024	
Rear_clearence_harness	0600030	
RH modesty panel AV	0610605	
Roof_Haches_W_Fan	0600108	
Service_Door_Harness	0600012	
Sound_System_AuxHarness	062817	
Sound_System_Harness	0600180	
Sound_System_Prack_Harness	063106	
Sound_system_pwr_harness	0600083	
SpherosTimerHarness	0600089	
Starter_chassis_GND	idemX3_060307	
starter_relay_Melco_VOLVO	060711	
StarterBattery	060712	
SubWofferExtHarness	idemH3_066743	
TPMS_antennas	0600008	
Trailer_Inputs_VEC_harness	060722	
Trailer_Outputs_VEC_harness	060723	
0600187	0600010	0600187
TransSensorWithoutRetarder_harness	IDEMX3_0610588	
TransSensorWithRetarder_harness	IDEMX3_0610586	
Stairs_UpperSection_Harness	0600032	
Stairs_LowerSection_Harness	0600033	
Urea_Harness	0610590	
USB_5V_Harness	IdemX3_060660	
USB_Ipod_harness	idemX3_901349	
Wall_LedStrip_Ext_WCL	0600044	
WCL_IOE_Control	0600117	
wcl_power_harness	060728	
Wcl Ricon Access	IdemCOM069744	
Wcl ricon lighting	061248	
WCL_RICON_Lighting_Jumper	069065	
WCL_Ricon_Window_Sw_Lh	0600048	
WCL_Ricon_Window_Sw_RH	0600050	
wcl_upperDoorControl	0600080	
WclRiconSlidingDoor	069992	
wifi_system_gnd	idemX3_069925	
Win_Ajar_FJB	idemX3_060574	
Win_ajar_window_side_LH	see 0600083	
Win_ajar_window_side_RH	see 0600084	
Win_ajar_window_Ricon_RH	060757	
Windshield_Washer_Harness	0600019	
Wind Ajar, Curb Lights and câblage système de son LH	0600083	
Wind Ajar, Curb Lights RH	0600084	

DESCRIPTION	FAN COND	Heater L3
CHANGE ORDER	2022123	2023053
EFFECTIVE VEHICLE		
wiring revision	6	7
ACB_Gen2	0610245	
Adaptor Phantom Feed - Radio Antenna	22480495	
Adaptor Fakra to Motorola - Radio Antenna	901727	
Antenna cable - AM/FM/DBA	901728	
ailse_light_extension	idemX3_069424	
AFSS Eberspasher Harness	0600144	
AFSS ProHeat Harness	0600089	
AirHorn_harness	idemX3_0610004	
Aisle_lights_harness	0600110	
Alt_battery_LH	060682	
Alt_battery_LH_REMY	0610053	
Alt_battery	060684	
Alt_battery_REMY	0610052	
Alt_chassis_GND	idemX3_060264	
Alt_chassis_GND_REMY	0610034	
Alt_Jumper_Power	idemX3_060265	
Alt_LH_chassis_GND	idemX3_069504	
Alt_LH_chassis_GND_REMY	0610035	
Alternator_Ctrl_RH_harness_BOSCH	0600111	
Alternator_Ctrl_RH_harness_REMY	0600113	
Alternator_Ctrl_LH_harness_BOSCH	0600112	
Alternator_Ctrl_LH_harness_REMY	0600114	
Batt_charger_120V_inlet	0600155	
Batt_charger_120V_Xantrex	0600133	
battery_12Vd_harness	060686	
battery_24Vd_harness	060691	
Battery__Cable	062371	
Battery_GND_Electro_harness	060693	
Battery_Gnd_Harness	063592_microstation	
Beru_antenna	idemX3_0610143	
Beru_Fjb	idemX3_0610142	
Brigade to infotainment harness	0610604	
Bumper_Harness_Acb	0600026	
Bumper_Harness_Acb_Fog	0600025	
Cable adapteur 120v Pour conducteur	0600090	
Comp_Bitzer	idemMth_061482	
Comp_Bock	IDEM VIP0610550	
Destination_Sign_Emergency_Sw124	IdemX3_069944	
Destination_Sign_Front_To_Side	IdemX3_069941	
Destination_Sign_Interconn_Side_Rear	IdemX3_069942	
Destination_Sign_Interconnection	IdemX3_069940	
Destination_Sign_Rear	IdemX3_069943	

DESCRIPTION	FAN COND	Heater L3
CHANGE ORDER	2022123	2023053
EFFECTIVE VEHICLE		
wiring revision	6	7
booster_positive_Harness	060692	
Cablage__ASM	061180_JPEG	
Dash	0600007	
Docking Cornering Sw.	0610012 / 066613 (SAV)	
Entrance_Door_Harness	0600013	
SCR Cmpt Clearance lights Harness	0600031	
DPF_Door_light	0600046	
DPF_Volvo	060746	
Driver_120VAC_Outlet	Idem X3_0610152	
electric_horn	0600018	
Electronic Mirrors Harness	0610486	
Eng_Cradle_Allisson	0600115	
Eng_Cradle_Ishift	0600121	
Engine_Acc	0600120	
Engine_chassis_GND	IdemX3_060306	
ENGINE_DOOR	060748	
Engine_Block_Heater_Harness	Idem X3_0610126	
equilizer_harness_Vanner	060855	
Evap_HARNESS_Ctrl	060804	
Evap_Power_GND_harness	idemX3_060527	
Evap_power_harness_	IdemX3_060529	
FanDrive_harness	IdemX3_068820	
FanDrive_pwr24	idemX3_069245	
FanDrive_pwrGnd	idemX3_069246	
FJB	0600000	
AFSS Pro-Heat interface	0600089	
FJB_TransAlisson	0600003	
FJB_TransIShift	0600021	
Flame_Detector_Ext_Harness	061046	
Front_Clearance_Harness	0600011	
Front_flip_screen	IdemX3_060099	
Front_Harness	0600001	
Front_Harness_Interface	0600123	
Fuel_gauge_harness	idemX3_060087	
Indiv_Headset_Radios_PWR	401420	
Inter_Batt_cable	061036	
Interior_Light_access	0600009	
INVerter_120Vac_LH (Option 1 inverter)	0600150	
INVerter_120Vac_LH (Option 2 inverter)	0600147	
INVerter_120Vac_RH	0600096	
24V_Inverter_harness	0600137	
InverterJonctionNegatif	060819	

DESCRIPTION	FAN COND	Heater L3
CHANGE ORDER	2022123	2023053
EFFECTIVE VEHICLE		
wiring revision	6	7
InverterJonctionNegatif2	061149	
InverterJonctionPositif	060019	
ISM_RELAY_Prack	0610200	
JUMPER_120VAC_WCL	068937	
Jumper_Y_120Vac	068221	
Lavatory	060833	
Led Pied conducteur	0600078	
LH_CONSOLE	Cancel	
LH_Console Alisson	0600003	
LH_Console I_Shift	0600021	
ENGINE_LINEAR_THERMAL_Harness	0610154	
Linear_thermal_WO_afss	idemH3_069175	
Lugg_Harness_H341	0610010	
Lugg_Harness_H345	0600051	
Outlet_120vac_PRack X3_Seul	0600131	
ParcelRackJB	0600029	
Plug_for_2_sliding_seats	067984	
Plug_for_3_sliding_seats	068321	
Pneumatic_Plate_harness	0600020	
Power_harness_ 45pi	0600014	
Power_harness_ 41pi	0600017	
Power_RH_Splitter_harness	060654	
Power_Steering_Ctrl	0600015	
PowerVecr	060870	
PreHeate_relay	060872	
PreHeater_GND	idemX3_060308	
Preheater_Thermal_harness	idemX3_067676	
Preheater_ON_W_Batt_Charger	idemX3_060092	
Preheater_ON_W_HVAC	idemX3_060093	
ProHeat_Interface	idemX3_060228	
ProHeat_Timer_Harness	060016	
Proheat_To_RJB_harness	0610115	0600221
RadiatorChassisGnd	idemX3_069279	
Radiator door harness	061153	
Reading_Light_RH_Standard	0600041	
Reading_Light_LH_Standard	0600040	
Rear_wheel_sub_harness	0610473	
Relay_Melco_batt	idemX3_069542	
Resistor for speakers impedence matching	0600088	
RHC_PowerHarness	0600006	
RJB_ALISSON	0600334	0600219
RJB_Ctrl	0600085	

DESCRIPTION	FAN COND	Heater L3
CHANGE ORDER	2022123	2023053
EFFECTIVE VEHICLE		
wiring revision	6	7
RJB_ISHIFT	0600024	0600220
Rear_clearence_harness	0600030	
RH modesty panel AV	0610605	
Roof_Haches_W_Fan	0600108	
Service_Door_Harness	0600012	
Sound_System_AuxHarness	062817	
Sound_System_Harness	0600180	
Sound_System_Prack_Harness	063106	
Sound_system_pwr_harness	0600083	
SpherosTimerHarness	0600089	
Starter_chassis_GND	idemX3_060307	
starter_relay_Melco_VOLVO	060711	
StarterBattery	060712	
SubWofferExtHarness	idemH3_066743	
TPMS_antennas	0600008	
Trailer_Inputs_VEC_harness	060722	
Trailer_Outputs_VEC_harness	060723	
Trans_Fr_To_Rr_H345	0600187	0600218
TransSensorWithoutRetarder_harness	IDEMX3_0610588	
TransSensorWithRetarder_harness	IDEMX3_0610586	
Stairs_UpperSection_Harness	0600032	
Stairs_LowerSection_Harness	0600033	
Urea_Harness	0610590	
USB_5V_Harness	IdemX3_060660	
USB_Ipod_harness	idemX3_901349	
Wall_LedStrip_Ext_WCL	0600044	
WCL_IOE_Control	0600117	
wcl_power_harness	060728	
Wcl Ricon Access	IdemCOM069744	
Wcl ricon lighting	061248	
WCL_RICON_Lighting_Jumper	069065	
WCL_Ricon_Window_Sw_Lh	0600048	
WCL_Ricon_Window_Sw_RH	0600050	
wcl_upperDoorControl	0600080	
WclRiconSlidingDoor	069992	
wifi_system_gnd	idemX3_069925	
Win_Ajar_FJB	idemX3_060574	
Win_ajar_window_side_LH	see 0600083	
Win_ajar_window_side_RH	see 0600084	
Win_ajar_window_Ricon_RH	060757	
Windshield_Washer_Harness	0600019	
Wind Ajar, Curb Lights and câblage système de son L	0600083	
Wind Ajar, Curb Lights RH	0600084	

DESCRIPTION	Heater L3	MCM2
CHANGE ORDER	2023053	2024096
EFFECTIVE VEHICLE		
wiring revision	7	9
ACB_Gen2	0610245	
Adaptor Phantom Feed - Radio Antenna	22480495	
Adaptor Fakra to Motorola - Radio Antenna	901727	
Antenna cable - AM/FM/DBA	901728	
ailse_light_extension	idemX3_069424	
AFSS Eberspasher Harness	0600144	
AFSS ProHeat Harness	0600089	
AirHorn_harness	idemX3_0610004	
Aisle_lights_harness	0600110	
Alt_battery_LH	060682	
Alt_battery_LH_REMY	0610053	
Alt_battery	060684	
Alt_battery_REMY	0610052	
Alt_chassis_GND	idemX3_060264	
Alt_chassis_GND_REMY	0610034	
Alt_Jumper_Power	idemX3_060265	
Alt_LH_chassis_GND	idemX3_069504	
Alt_LH_chassis_GND_REMY	0610035	
Alternator_Ctrl_RH_harness_BOSCH	0600111	
Alternator_Ctrl_RH_harness_REMY	0600113	
Alternator_Ctrl_LH_harness_BOSCH	0600112	
Alternator_Ctrl_LH_harness_REMY	0600114	
Batt_charger_120V_inlet	0600155	
Batt_charger_120V_Xantrex	0600133	
battery_12Vd_harness	060686	
battery_24Vd_harness	060691	
Battery__Cable	062371	
Battery_GND_Electro_harness	060693	
Battery_Gnd_Harness	063592_microstation	
Beru_antenna	idemX3_0610143	
Beru_Fjb	idemX3_0610142	
Brigade to infotainment harness	0610604	
Bumper_Harness_Acb	0600026	
Bumper_Harness_Acb_Fog	0600025	
Cable adapteur 120v Pour conducteur	0600090	
Comp_Bitzer	idemMth_061482	
Comp_Bock	IDEM VIP0610550	
Destination_Sign_Emergency_Sw124	IdemX3_069944	
Destination_Sign_Front_To_Side	IdemX3_069941	
Destination_Sign_Interconn_Side_Rear	IdemX3_069942	
Destination_Sign_Interconnection	IdemX3_069940	
Destination_Sign_Rear	IdemX3_069943	

DESCRIPTION	Heater L3	MCM2
CHANGE ORDER	2023053	2024096
EFFECTIVE VEHICLE		
wiring revision	7	9
booster_positive_Harness	060692	
Cablage__ASM	061180_JPEG	
Dash	0600007	
Docking Cornering Sw.	0610012 / 066613 (SAV)	
Entrance_Door_Harness	0600013	
SCR Cmpt Clearance lights Harness	0600031	
DPF_Door_light	0600046	
DPF_Volvo	060746	
Driver_120VAC_Outlet	Idem X3_0610152	
electric_horn	0600018	
Electronic Mirrors Harness	0610486	
Eng_Cradle_Allisson	0600115	
Eng_Cradle_Ishift	0600121	
Engine_Acc	0600120	
Engine_chassis_GND	IdemX3_060306	
ENGINE_DOOR	060748	
Engine_Block_Heater_Harness	Idem X3_0610126	
equilizer_harness_Vanner	060855	
Evap_HARNESS_Ctrl	060804	
Evap_Power_GND_harness	idemX3_060527	
Evap_power_harness_	IdemX3_060529	
FanDrive_harness	IdemX3_068820	
FanDrive_pwr24	idemX3_069245	
FanDrive_pwrGnd	idemX3_069246	
FJB	0600000	0600283
AFSS Pro-Heat interface	0600089	
FJB_TransAlisson	0600003	Deleted
FJB_TransIShift	0600021	
Flame_Detector_Ext_Harness	061046	
Front_Clearance_Harness	0600011	
Front_flip_screen	IdemX3_060099	
Front_Harness	0600001	
Front_Harness_Interface	0600123	
Fuel_gauge_harness	idemX3_060087	
Indiv_Headset_Radios_PWR	401420	
Inter_Batt_cable	061036	
Interior_Light_access	0600009	
INVerter_120Vac_LH (Option 1 inverter)	0600150	
INVerter_120Vac_LH (Option 2 inverter)	0600147	
INVerter_120Vac_RH	0600096	
24V_Inverter_harness	0600137	
InverterJonctionNegatif	060819	

DESCRIPTION	Heater L3	MCM2
CHANGE ORDER	2023053	2024096
EFFECTIVE VEHICLE		
wiring revision	7	9
InverterJonctionNegatif2	061149	
InverterJonctionPositif	060019	
ISM_RELAY_Prack	0610200	
JUMPER_120VAC_WCL	068937	
Jumper_Y_120Vac	068221	
Lavatory	060833	
Led Pied conducteur	0600078	
LH_CONSOLE	Cancel	
LH_Console Alisson	0600003	
LH_Console I_Shift	0600021	
ENGINE_LINEAR_THERMAL_Harness	0610154	
Linear_thermal_WO_afss	idemH3_069175	
Lugg_Harness_H341	0610010	
Lugg_Harness_H345	0600051	
Outlet_120vac_PRack X3_Seul	0600131	
ParcelRackJB	0600029	
Plug_for_2_sliding_seats	067984	
Plug_for_3_sliding_seats	068321	
Pneumatic_Plate_harness	0600020	
Power_harness_ 45pi	0600014	
Power_harness_ 41pi	0600017	
Power_RH_Splitter_harness	060654	
Power_Steering_Ctrl	0600015	
PowerVecr	060870	
PreHeate_relay	060872	
PreHeater_GND	idemX3_060308	
Preheater_Thermal_harness	idemX3_067676	
Preheater_ON_W_Batt_Charger	idemX3_060092	
Preheater_ON_W_HVAC	idemX3_060093	
ProHeat_Interface	idemX3_060228	
ProHeat_Timer_Harness	060016	
Proheat_To_RJB_harness	0600221	
RadiatorChassisGnd	idemX3_069279	
Radiator door harness	061153	
Reading_Light_RH_Standard	0600041	
Reading_Light_LH_Standard	0600040	
Rear_wheel_sub_harness	0610473	
Relay_Melco_batt	idemX3_069542	
Resistor for speakers impedence matching	0600088	
RHC_PowerHarness	0600006	
RJB_ALISSON	0600219	
RJB_Ctrl	0600085	

DESCRIPTION	Heater L3	MCM2
CHANGE ORDER	2023053	2024096
EFFECTIVE VEHICLE		
wiring revision	7	9
RJB_ISHIFT	0600220	
Rear_clearence_harness	0600030	
RH modesty panel AV	0610605	
Roof_Haches_W_Fan	0600108	
Service_Door_Harness	0600012	
Sound_System_AuxHarness	062817	
Sound_System_Harness	0600180	
Sound_System_Prack_Harness	063106	
Sound_system_pwr_harness	0600083	
SpherosTimerHarness	0600089	
Starter_chassis_GND	idemX3_060307	
starter_relay_Melco_VOLVO	060711	
StarterBattery	060712	
SubWofferExtHarness	idemH3_066743	
TPMS_antennas	0600008	
Trailer_Inputs_VEC_harness	060722	
Trailer_Outputs_VEC_harness	060723	
Trans_Fr_To_Rr_H345	0600218	
TransSensorWithoutRetarder_harness	IDEMX3_0610588	
TransSensorWithRetarder_harness	IDEMX3_0610586	
Stairs_UpperSection_Harness	0600032	
Stairs_LowerSection_Harness	0600033	
Urea_Harness	0610590	
USB_5V_Harness	IdemX3_060660	
USB_Ipod_harness	idemX3_901349	
Wall_LedStrip_Ext_WCL	0600044	
WCL_IOE_Control	0600117	
wcl_power_harness	060728	
Wcl Ricon Access	IdemCOM069744	
Wcl ricon lighting	061248	
WCL_RICON_Lighting_Jumper	069065	
WCL_Ricon_Window_Sw_Lh	0600048	
WCL_Ricon_Window_Sw_RH	0600050	
wcl_upperDoorControl	0600080	
WclRiconSlidingDoor	069992	
wifi_system_gnd	idemX3_069925	
Win_Ajar_FJB	idemX3_060574	
Win_ajar_window_side_LH	see 0600083	
Win_ajar_window_side_RH	see 0600084	
Win_ajar_window_Ricon_RH	060757	
Windshield_Washer_Harness	0600019	
Wind Ajar, Curb Lights and câblage système de son LH	0600083	
Wind Ajar, Curb Lights RH	0600084	

CIRCUITS LIST

CircuitID	Description	CircuitID	Description	CircuitID	Description
0	GNDBatteries	0RC	GndDoorEncoder	A1.19	TransmissionAlisson
0A	ClockSpring	0RGA	Rear_Galley	A1.24	TransmissionAlisson
00A	EntrancedoorSystem	0RGA2	Rear_Galley	A1.25	TransmissionAlisson
00A2	Cust_Adapt_Interface	00RHC	GNDVECRH	A1.31	TransmissionAlisson
0AltL	Gnd	0SS	VSS_GND	A1.33	TransmissionAlisson
0AltLL	GNDChassis	0SS1	VSS	A1.36	TransmissionAlisson
0AltR	GNDChassis	0SS2	GNDUSBCharger	A1.37	TransmissionAlisson
0AltUL	GNDChassis	0SS2W	GNDIComera	A1.51	TransmissionAlisson
0B	GNDChassis	0SS3	VSS	A1.52	TransmissionAlisson
0C	Ignition&enginestart	0SS5	Wifi_Chassis_Gnd	A1.54	TransmissionAlisson
0Chgr	GndBatterieCharger	0TR.White	VECT	A1.55	TransmissionAlisson
0COND	CondensorfansGND	00VA	RJBelectronicGND	A1.58	TransmissionAlisson
0ECU	EngineECUVolvo	0W	WCLGND	A1.71	TransmissionAlisson
0EV2	HVACpassengers	0WC	GndWCLRemoteCTRL	A1.74	TransmissionAlisson
0EVAP1	HVACpassengers	12Ecu	12VECU	A1.76	TransmissionAlisson
0EVAP2	HVACpassengers	12ISH	Pwrl_Shift	A1.77	TransmissionAlisson
0F	GNDCustomer	12MEM		A1X1:1	VDSPwr
00F	FJBelectronicGND	12SS2		A1X1:2	VDSGND
00F1	Multiplexpower	12V_ACC	Mobile_DVR	A2A.9	TransmissionAlisson
0F2	12Voutlets	12VA	Batteries	A2A.11	TransmissionAlisson
00F2	Multiplexpower	12VD	Batteries	A5.B	TransmissionAlisson
00F3	Multiplexpower	12VD1	12VD	A8.1	ClockSpring
00F4	GND	12VD4		A8.2	ClockSpring
0FDS	Driver_Seat	12Wup1		A8.3	ClockSpring
0FE	GNDstud	24RHC	PowerVECRH	A8.4	ClockSpring
0FH	GND	24VA	Batteries	A8.6	ClockSpring
00FH	GND	24VCurb	Curblights	A9CX1.2	ESP
00FH1	HVACdefroster	24VD	Batteries	A9CX1.4	ESP
00FH2	Multiplexpower	24VD1	Booster_Block	A9CX1.5	ESP
00FH3	Multiplexpower	24VD2	Equalizer	A9CX1.6	ESP
00FH4	Multiplexpower	24VD3	Ignition&enginestart	A9CX2.1	ESP
00FR	FJB-RJBjunction	24VI	24WUP	A9CX2.2	ESP
0PR1	120VACoutlets	154.7	EmergencyLight	A9CX2.3	ESP
0R	GNDChassis	401	CTGI_Gateway	A9CX2.4	ESP
00R	Networks	900	J1587+	A9CX2.6	ESP
00R1	RJBelectronicGND	901	J1587-	A9CX2.7	ESP
00R2	Multiplexpower	_00	GNDBatteries	A9CX2.9	ESP
00R3	Multiplexpower	A1-.25	TransmissionAllison	A9CX2.10	ESP
00R4	Multiplexpower	A1.11	TransmissionAlisson	A9CX2.12	ESP
00R5	RJBelectronicGND	A1.12	TransmissionAlisson	A9CX2.13	ESP
0RAD	GNDChassis	A1.15	TransmissionAlisson	A9CX2.16	ESP
0RAD2	Fansdriveelectric	A1.16	TransmissionAlisson	A9CX2.17	ESP
0RB6	GndLavSmokedetec	A1.18	TransmissionAlisson	A9CX3.2	ESP

CIRCUITS LIST

CircuitID	Description	CircuitID	Description	CircuitID	Description
A9CX3.3	ESP	A31.5	IndirectLights	A41J1.7	Shutdown
A9CX3.5	ESP	A34.A5	Fansdriveelectric	A41J1.10	Brake,enginebrake,retarder
A9CX3.7	ESP	A34.B5	Fansdriveelectric	A41J1.13	Ignition&enginestart
A9CX3.9	ESP	A34.C5	Fansdriveelectric	A41J1.16	EngineECUVolvo
A9CX3.10	ESP	A34.D5	Fansdriveelectric	A41J1.19	EngineECUVolvo
A9CX4.1	ESP	A34.E5	Fansdriveelectric	A41RJ1.18	LightsGND
A9CX4.4	ESP	A34.F5	Fansdriveelectric	A42J1.1	Kneeling,tag,lowbuoy
A9CX4.7	ESP	A34.G5	Fansdriveelectric	A42J1.3	Kneeling,tag,lowbuoy
A9CX4.8	ESP	A34.H5	Fansdriveelectric	A42J1.4	Kneeling,tag,lowbuoy
A9CX4.10	ESP	A34J.E	Fansdriveelectric	A42J1.7	Kneeling,tag,lowbuoy
A9CX4.11	ESP	A34J.F	Fansdriveelectric	A42J1.10	Kneeling,tag,lowbuoy
A10X3.4	Preheat	A34R.A3	Fansdriveelectric	A42J1.13	Kneeling,tag,lowbuoy
A10X3.6	Preheat	A34R.B3	Fansdriveelectric	A42J1.16	Kneeling,tag,lowbuoy
A11A.2	HVACpassengers	A34R.C3	Fansdriveelectric	A42J1.19	Kneeling,tag,lowbuoy
A11A.6	Preheat	A34R.D3	Fansdriveelectric	A42J2.15	Kneeling,tag,lowbuoy
A11A.8	Preheat	A34R.E3	Fansdriveelectric	A42RJ1.18	Kneeling,tag,lowbuoy
A12.1	StalkBase	A34R.F3	Fansdriveelectric	A42RJ2.14	Kneeling,tag,lowbuoy
A12.2	StalkBase	A34R.G3	Fansdriveelectric	A43J1.10	Airdryer
A12.3	StalkBase	A34R.H3	Fansdriveelectric	A43J1.13	ZFsteering
A14.B4	Cluster	A36AJA.7	Ignition&enginestart	A43J1.16	Frflashers,markers,clearance,headlights
A14.B18	Cluster	A36AJA.8	ISMRelay	A43J1.19	TPMS
A14A.2	Wiper	A36AJA.9	ISMRelay	A43J2.1	HVACdefroster
A14A.3	Wiper	A36AJA:10	Horn	A43J2.4	HVACdefroster
A14A.11	FlasherSignal	A36JA.15	Ignition&enginestart	A43J2.5	LuggageDoorLock/Unlock
A14A.12	FlasherSignal	A36JA.17	Ignition	A43J2.7	LuggageDoorLock/Unlock
A14C.1	Cluster	A36JB.2	Ignition	A43J2.10	LuggageDoorLock/Unlock
A14D.2	Cluster	A36JB.14	Firesuppression	A43J2.13	
A17.AC	Preheat	A39P101.1	Speakers	A43RJ1.17	ACB
A21.1	Wiper	A39P101.2	Speakers	A43RJ1.18	LuggageDoorLock/Unlock
A21.B1	Wiper	A39P101.3	Speakers	A43RJ2.2	Airdryer
A21.B2	Wiper	A39P101.4	Speakers	A44J1.4	EntrancedoorSystem
A22.2	EntrancedoorSystem	A39P101.5	VSS	A44J1.7	Ignition&enginestart
A23.2	SignatureLights	A39P101.6	Speakers	A44J1.13	Emergency&aislelights
A23.5	SignatureLights	A39P101.8	Speakers	A44J1.16	Horn
A24A.2	SignatureLights	A39P101.9	Speakers	A44J1.19	Engine&RJBcmpt.lights
A24A.5	SignatureLights	A39P901.1	Speakers	A44J2.1	Sunvisor
A26P2.F	Sunvisor	A39P901.4	Speakers	A44J2.4	Sunvisor
A27.30	ZFsteering	A39P901.5	Speaker	A44J2.7	Driverlights
A27.87A	ZFsteering	A39P901.6	Speakers	A44J2.10	Sunvisor
A29.2	WallStripled	A40.3	Trailer	A44J2.13	Sunvisor
A29.5	WallStripled	A40.3.Blue	Trailer	A44RJ1.5	Emergency&aislelights
A29.6	WallStripled	A41J1.3	EntrancedoorSystem	A44RJ1.17	Frflashers,markers,clearance,headlights
A31.2	IndirectLights	A41J1.4	Frontocc.lamp	A44RJ2.2	EntrancedoorSystem

CIRCUITS LIST

CircuitID	Description	CircuitID	Description	CircuitID	Description
A44RJ2.3	WipersGND	A48J1.3	EntrancedoorSystem	A50J2.13	Brake,enginebrake,retarder
A44RJ2:2	EmergencyLight	A48J1.4	HVACdefroster	A50RJ2.2	Fansdriveelectric
A45J1-7	Multiplexpower	A48J1.10	EntrancedoorSystem	A50RJ2.3	Airdryer
A45J1.1	Driverwindow	A48J1.13	EntrancedoorSystem	A51J1.1	Dockinglights
A45J1.3	Driverwindow	A48J1.16	EntrancedoorSystem	A51J1.4	Frflashers,markers,clearance,headlights
A45J1.4	ISMRelay	A48J1.19	EntrancedoorSystem	A51J1.7	Back-upwarnings
A45J1.7	Multiplexpower	A48J1:4	RHFlasher	A51J1.10	Frflashers,markers,clearance,headlights
A45J1.10	Kneeling,tag,lowbuoy	A48J2.1	HVACdefroster	A51J1.13	Rrflashers,markers,tail,stoplights
A45J1.13	Kneeling,tag,lowbuoy	A48J2.4	EntrancedoorSystem	A51J1.16	Frflashers,markers,clearance,headlights
A45J1.16	Mirrors	A48J2.6	EntrancedoorSystem	A51J1.19	Rrflashers,markers,tail,stoplights
A45J1.19	Kneeling,tag,lowbuoy	A48J2.7	EntrancedoorSystem	A51J2.1	Rrflashers,markers,tail,stoplights
A45J2.1	Mirror	A48J2.10	EntrancedoorSystem	A51J2.7	Rrflashers,markers,tail,stoplights
A45J2.7	Kneeling,tag,lowbuoy	A48J2.13	EntrancedoorSystem	A51J2.10	Back-upwarnings
A45J2.10	Driverlights	A48J2.15	EntrancedoorSystem	A51J2.15	Kneeling,tag,lowbuoy
A45RJ1.17	LuggageDoorLock/Unlock	A48RJ1.6	HVACdefroster	A51RJ1.5	Frflashers,markers,clearance,headlights
A45RJ1.18	Kneeling,tag,lowbuoy	A48RJ1.17	HVACdefroster	A51RJ1.6	Kneeling,tag,lowbuoy
A45RJ2.2	Gnd	A48RJ1.18	EntrancedoorSystem	A51RJ1.17	Rrflashers,markers,tail,stoplights
A46J1.1	Horn	A48RJ2.2	EntrancedoorSystem	A51RJ1.18	Rrflashers,markers,tail,stoplights
A46J1.4		A48RJ2.3	EntrancedoorSystem	A51RJ2.2	Back-upwarnings
A46J1.5		A48RJ2.14	HVACdefroster	A52J1.1	Dockinglights
A46J1.7		A49J1.1	EntrancedoorSystem	A52J1.3	Dockinglights
A46J1.13	LuggageDoorLock/Unlock	A49J1.3	Frflashers,markers,clearance,headlights	A52J1.4	Rrflashers,markers,tail,stoplights
A46J1.16	LuggageDoorLock/Unlock	A49J1.4	CorneringLightRH	A52J1.7	Lights
A46J1.19	LuggageDoorLock/Unlock	A49J1.7	Frflashers,markers,clearance,headlights	A52J1.10	Rrflashers,markers,tail,stoplights
A46J1:7	LHFlasher	A49J1.10	Wipers&washer	A52J1.13	Rrflashers,markers,tail,stoplights
A46J2.1	IndirectLights	A49J1.13	Frflashers,markers,clearance,headlights	A52J1.16	TransmissionAlisson
A46J2.4	SignatureLights	A49J1.16	Cornering&foglights	A52J1.19	WCL
A46J2.7	WallStripLed	A49J1.19	Frflashers,markers,clearance,headlights	A52J2.1	Rrflashers,markers,tail,stoplights
A46J2.10	IndirectLights	A49J2.1	Frflashers,markers,clearance,headlights	A52J2.4	TransmissionAlisson
A46J2.13	WallStripLed	A49J2.4	HVACdefroster	A52J2.7	Rrflashers,markers,tail,stoplights
A46RJ1.6	SignatureLights	A49J2.7	EntrancedoorSystem	A52J2.10	Rrflashers,markers,tail,stoplights
A47J1.3	Frflashers,markers,clearance,headlights	A49J2.10	HVACdefroster	A52RJ1.17	Rrflashers,markers,tail,stoplights
A47J1.4	CorneringLightLH	A49J2.13	Frflashers,markers,clearance,headlights	A52RJ1.18	WCL
A47J1.7	Frflashers,markers,clearance,headlights	A49RJ1.17	Cornering&foglights	A53J1.1	Fansdriveelectric
A47J1.13	Frflashers,markers,clearance,headlights	A49RJ2.2	Frflashers,markers,clearance,headlights	A53J1.3	Fansdriveelectric
A47J1.16	Cornering&foglights	A50J1.1	Fansdriveelectric	A53J1.4	Lavatory
A47J1.19	Frflashers,markers,clearance,headlights	A50J1.3	Fansdriveelectric	A53J1.7	Engine&RJBcmpt.lights
A47J2.4	HVACdefroster	A50J1.7		A53J1.10	Ignition&enginestart
A47J2.10	Frflashers,markers,clearance,headlights	A50J1.13	Rrflashers,markers,tail,stoplights	A53J1.16	Lavatory
A47J2.13	Frflashers,markers,clearance,headlights	A50J1.19	VECT	A53J1.19	Lavatory
A47RJ1.17	Frflashers,markers,clearance,headlights	A50J2.1	Alternators	A53J2.1	Alternators
A47RJ2.2	Cornering&foglights	A50J2.4	Lavatory	A53J2.4	Alternator
A48J1.1	EntrancedoorSystem	A50J2.10	Pre_Heater	A53J2.13	Ignition&enginestart

CIRCUITS LIST

CircuitID	Description	CircuitID	Description	CircuitID	Description
A53RJ1.17	Lavatory	A58J1.1	IndirectLights	A108.5	TransmissionI_Shift
A53RJ1.18	Engine&RJBcmpt.lights	A58J1.3	WallStripLed	A108.7	TransmissionI_Shift
A54J1.1	HVACpassengers	A58J1.4	Curblights	A108.8	TransmissionI_Shift
A54J1.3	HVACpassengers	A58J1.7	Curblights	A108.9	TransmissionI_Shift
A54J1.7	HVACpassengers	A58J1.10	IndirectLights	A108.10	TransmissionI_Shift
A54J1.10	Preheat	A58J1.13	Roof_Hatch_Fans	A109A.7	TransmissionI_Shift
A54J1.16	HVACpassengers	A58J1.16	IndirectLights	A109A.8	TransmissionI_Shift
A54J1.19	HVACpassengers	A58J1.19	Roof_Hatch_Fans	A109A.9	TransmissionI_Shift
A54J2.1	ParcelrackA/Csystem	A58J2.1	ParcelrackA/Csystem	A109A.10	TransmissionI_Shift
A54J2.4	HVACpassengers	A58J2.4	RadingLights	A120B.3	VSS
A54J2.7	HVACpassengers	A58J2.7	ReadingLamps	A120B.4	VSS
A54J2.10	HVACpassengers	A58J2.8	WindowAjar	A120B.5	VSS
A54J2.13	HVACpassengers	A58J2.10	Indirectlights	A120B.6	VSS
A54J2.15	HVACpassengers	A58RJ1.5	Curblights	A120C.4	ReadingLamp
A54RJ1.6	HVACpassengers	A58RJ1.6	RoofHatcheswFan	A120C1.1	VSS
A54RJ1.17	HVACpassengers	A58RJ1.17	Lavatory	A120C1.3	VSS
A54RJ1.18	HVACGND	A58RJ1.18	IndirectLights	A120C3.14	VSS
A54RJ2.2	HVACGND	A58RJ2.3	Readinglamps&chime	A120C3.19	VSS
A54RJ2.3	HVACpassengers	A58RJ2.14	ParcelrackA/Csystem	A121A.18	VSS
A55J1.1	Driverlights	A59J2.13	Emergency&aislelights	A121B.16	VSS
A55J1.3	Frflashers,markers,clearance,headlights	A65_Gnd	VSS	A121B.17	VSS
A55J1.4	Cluster	A65_L+	VSS	A121C.11	VSS
A55J1.7	eMirrors_VS	A65_R+	VSS	A121C.12	VSS
A55J1.10	eMirrors_Pwr	A70_Booster	VSS	A121C.13	VSS
A55J1.13	Forwardcollisionwarning	A77.A	Equalizer	A121C.15	VSS
A55J1.16	MirrorAirpressureSig	A77.F	ISMPrak	A121D.7	VSS
A55J1:7	Reargearsignal	A77.H	Equalizer	A121D.10	VSS
A55J2.15	DaylightSensor	A78.3	Equalizer	A130.3	Firesuppression
A55RJ1.6	MirrorairPressureRtnSig	A78.4	Equalizer	A130.4	Firesuppression
A55RJ1.18	ElectronicGnd	A79.3	Equalizer	A130.6	Firesuppression
A56J1.1	Lugg_door_lock	A80.3	Equalizer	A130.8	Firesuppression
A56J1.3	DisplaySelectSig	A80.4	Equalizer	A130.11	Firesuppression
A56J1.4	DisplayEscapeSig	A81CN3A.3	EngineECUVolvo	A131A.C	Firesuppression
A56J1.7	DisplayUpSig	A81CN3A.4	Control_Ground_Relay	A131B.A	Firesuppression
A56J1.10	DisplayDownSig	A81CN3A.5	EngineECUVolvo	A131B.C	Firesuppression
A56J1.13	Multiplexpower	A81CN3A.9	EngineECUVolvo	A137A.4	Ureasystem
A56J1.16	FlasherTrig	A81CN3B.26	EngineECUVolvo	A137A.7	Ureasystem
A56J1.19	24VIGN	A81CN3B.27	EngineECUVolvo	A137A.8	Ureasystem
A56J1:19	24VIGN	A81CN3B.28	EngineECUVolvo	A137A.24	Ureasystem
A57J1.1	WCL	A81CN3B.30	EngineECUVolvo	A137A.28	Ureasystem
A57J1.3	WCL	A81CN3B.35	EngineECUVolvo	A137A.40	Ureasystem
A57J1.19	WClSystem	A81CN3B.36	EngineECUVolvo	A137A.44	Ureasystem
A57RJ1.18	WCL	A81JB.6	ZFsteering	A137A.49	Ureasystem

CIRCUITS LIST

CircuitID	Description	CircuitID	Description	CircuitID	Description
A137A.50	Ureasystem	B99.2	Ureasystem	CB21	EntrancedoorSystem
A137A.51	Ureasystem	B115A.3	Ureasystem	CB48	ELDPwr
A137A.54	Ureasystem	BLACK		CB117	Trailer
A137A.56	Ureasystem	Black		CB119	Trailer
A137A.59	Ureasystem	Black.1	ReadingLamp	CB128	24VD
A137A.62	Ureasystem	Black.3	ReadingLamps	CB201	Fansdriveelectric
A138.3	Ureasystem	Blk		CB202	Fansdriveelectric
A138.12	Ureasystem	BLK1	VSS	CB203	Fansdriveelectric
A150.GND	VSS	BLK2	VSS	CB204	Fansdriveelectric
A150.L	VSS	BLK3	VSS	CB205	Fansdriveelectric
A150.R	VSS	BLK4	VSS	CB206	Fansdriveelectric
A154.8	EmergencyLight	BLK5	VSS	CB207	Fansdriveelectric
A157.3	EmergencyLight	Brown	Destinationsigns	CB208	Fansdriveelectric
A159.1	EmergencyLight	BussBar	12VDTOCB2	CB301.Black	Trailer
A159.2	EmergencyLights	C41.A	Preheat	D1	Ignition&enginestart
A190GND	Wifi_Chassis_Gnd	C60.1	Frflashers,markers,clearance,headlights	D7	EntrancedoorSystem
Alt_LL.2	Alternator	C60.3	Frflashers,markers,clearance,headlights	D9	Preheat
Alt_LR.2	Alternators	C60.4	Frflashers,markers,clearance,headlights	D12	Horn
Alt_UR.2	Alternators	C60.6	Frflashers,markers,clearance,headlights	D13	Horn
ALTL		C60.7	Frflashers,markers,clearance,headlights	D15	
AltLL	Alternators	C60.9	Frflashers,markers,clearance,headlights	D16	
AltLR	Alternators	C60.10	Frflashers,markers,clearance,headlights	D41	Ignition&enginestart
AltR		C60.12	Frflashers,markers,clearance,headlights	D43.B	Ignition&enginestart
AltUR	Alternators	CAN_Hi	eMirrors_VS	DCINneg	
ANT_A_CANH		CAN_Low	eMirrors_VS	DCDC	
ANT_A_CANL		CB1	24WUP	Dim5	IndirectLights
ANT_A_GND		CB2	Ignition&enginestart	Dim6	IndirectLights
ANT_A_PWR		CB3	HVACpassengers	DL0H	
ANT_B_CANH		CB5	24WUP	DL0HA	Networks
ANT_B_CANL		CB6	24VD	DL0HB	NetworkMux
ANT_B_GND		CB8	12WUP	DL0HS	Spareswires
ANT_B_PWR		CB9	Ureasystem	DL0L	
ANT_C_CANH		CB10	12WUP	DL0LA	Networks
ANT_C_CANL		CB11	VSS	DL0LB	NetworkMux
ANT_C_GND		CB12	120VACoutlets	DL0LS	Spareswires
ANT_C_PWR		CB13		DL1H	Cluster
Audio_Out_HDMI_L+	VSS	CB14	Wiper	DL1L	Cluster
Audio_Out_HDMI_R+	VSS	CB15	MuxPwr	DL2H	DBus
Audio_Out_HDMI_R-L-	VSS	CB16	MuxPwr	DL2L	DBus
AuxVideoGnd	VSS	CB17	MuxPwr	DL3H	Networks
B85.2	Ureasystem	CB18	MuxPwr	DL3L	Networks
B97.2	Ureasystem	CB19	MuxPwr	DL7H	NetworksECU
B98.2	Ureasystem	CB20	HVACdefroster	DL7L	NetworksECU

CIRCUITS LIST

CircuitID	Description	CircuitID	Description	CircuitID	Description
DL9H	NetworksECU	F53	Digitalclock	F141	HVACpassengers
DL9L	NetworksECU	F54	ElectronicMirror	F142	HVACpassengers
DL11H	Network	F55	Ignition&enginestart	F143	HVACpassengers
DL11L	Network	F56	MuxPwr	F144	HVACpassengers
DL100H	J1939network	F57	Destinationsign	F145	ParcelrackA/Csystem
DL100L	J1939network	F58/F57	Driver_Seat	F147	CCust
ECB1	SignatureLights	F68	24Wup	F148	12VD
ECB2	SignatureLights	F73	EngineECUVolvo	F149	Ureasystem
EI.7	EngineECUVolvo	F74		F150	Preheat
EI.18	EngineECUVolvo	F90	Ureasystem	F151	Preheat
EMS.EB29	Ignition&enginestart	F91	EngineECUVolvo	F152	Preheat
F4	TransmissionI_Shift	F95	24VIgn	F156	Unican
F10	Cluster	F96	Ignition&enginestart	F199	Fansdriveelectric
F11	Horn	F99	EngineECUVolvo	F200	VSS
F13	Cust_Adapt_Interface	F100	EngineECUVolvo	F201	VSS
F15	VolvolinkTGW	F101	R1toStarter	F202	VSS
F16	12VEng.run	F106	Multiplexpower	F203	VSS
F17	Multiplexpower	F107	Multiplexpower	F243	HVACpassengers
F20	Multiplexpower	F108	OBDPwr	F307.Blue	VECT
F22	ELDGateway	F109	Engine&RJBcmpt.lights	F612	
F23	ESP	F110	TransmissionAlisson	F614	
F24	Cust_Adapt_Interface	F112	Trailerinterface	Gnd	
F25	12Voutlets	F113	Trailerinterface	gnd_1	Cantrack
F26		F117	SparesVECR	Gnd_2	Cantrack
F27	SparesVECF	F121	CCust	gndCurb	Curblights
F29	ECUignition	F122	Equalizer	GREEN	
F30	Networks	F123	Preheat	Green	
F33	Multiplexpower	F124	Preheat	Gren	
F34	Multiplexpower	F126	HVACpassengers	GRN	
F35	Multiplexpower	F127	Preheat	GRN1	VSS
F36	Ignition&enginestart	F130	ParcelrackA/Csystem	GRN2	VSS
F37	EntrancedoorSystem	F130_F145	ParcelrackA/Csystem	GROUND	Rear_Galley
F39	24VDcustomer	F131	CCust	Hi	Preheat
F40	Firesuppression	F132	Multiplexpower	In+	
F41	24VDSaucon	F133	Multiplexpower	IN1	
F42	TransmissionI_Shift	F134	Multiplexpower	IN2	
F43	TransmissionI_Shift	F135	Multiplexpower	IN3	
F44	Multiplexpower	F136	Multiplexpower	JA.14	Ignition&enginestart
F45	24WUPA46	F137	Pre_Heater	L+	VSS
F46		F138	Engine&RJBcmpt.lights	L-	VSS
F47	Multiplexpower	F139	Alternator	L1	
F51	IndirectLights	F139A	Alternator	L142.3	Lavatory
F52	SignatureLights	F140	ReadingLamps	L177	Engine&RJBcmpt.lights

CIRCUITS LIST

CircuitID	Description	CircuitID	Description	CircuitID	Description
L207.1	WCL	N11	Networks	R22.87	ECUignition
L207.2	WCLlightsplatform	N12	Networks	R23.30	Cluster
L207.3	WCL	N13	Networks	R23A.87A	24VIGNVECU
L207.GND	WCL	N14	Networks	R25.87	24VIgnition
L305+		N15	Networks	R26.30	HVACpassengers
L305-		N16	Networks	R29	EngineECUVolvo
L350A.B2	EngineECUVolvo	N17	Networks	R30.87	12VEngruncustomer
L400.G	Engineheateroutlet	N18	Networks	R31.87	12VIgncustomer
L400.L	Engineheateroutlet	N19	Networks	R34.30	12VECU
L400.N	Engineheateroutlet	N20	Networks	R35.30	Ignition&enginestart
LED1	EmergencyLight	N21	Networks	R36.30	Horn
LED2	EmergencyLight	N22	Networks	R37.30	Horn
LED3	EmergencyLight	N23	Networks	R38-87	12VOutlet
LED4	EmergencyLight	N24	Networks	R38.87	12Voutlets
LF+	VSS	N25	Networks	R40.87	TransmissionI_Shift
LF-	VSS	N26	Networks	R45.NO	
LinN	Alternator	N27	Networks	R47.87	WCL
LinP	Alternator	N28	Networks	R51.87.Yellow	Trailer
Lo	Preheat	N30	Networks	R52.87.Black	Traillerinterface
LR+	VSS	N31	Networks	R52.87.Green	Trailer
LR-	VSS	N56-1	Networks	R53.30.Red	Trailer
MIC+	VSS	N56-2	Networks	R53.87.Yellow	Traillerinterface
MIC-	VSS	N57_1	Networks	R54.87	Trailer
Mo21.2	Wiper	N57_2	Networks	R54.87.Red	Traillerinterface
Mo22.2	Wiper	Neu		R55.30.Brown	Trailer
Mo65.3	Fansdriveelectric	Out+		R55.87.Green	Traillerinterface
Mo67.3	Fansdriveelectric	Pot		R56.87.Brown	Traillerinterface
Mo68.3	Fansdriveelectric	Pot1		R210.B	VSS
Mo69.3	Fansdriveelectric	PP1	WCL	R_Starter	Ignition&enginestart
Mo70.3	Fansdriveelectric	R+	VSS	Radio_Gnd	Audio
Mo71.3	Fansdriveelectric	R-	VSS	Radio_L+	Audio
Mo72.3	Fansdriveelectric	R4.85	Firesuppression	Radio_R+	Audio
Mo73.3	Fansdriveelectric	R4.87A	Preheat	RED1	VSS
N1	Networks	R5.87	Preheat	RED2	VSS
N2	Networks	R6:30	EntrancedoorSystem	RED3	VSS
N3	Networks	R7:30	EntrancedoorSystem	RED4	VSS
N4	Networks	R12	HVACpassengers	Res12	Mirrors
N5	Networks	R12.2	HVACpassenger	Res13	Mirrors
N6	Networks	R12VISS	VSS	Res21	RJBCmpt.light
N7	Networks	R16	Pre_Heater	Res22	Engine&RJBcmpt.lights
N8	Networks	R20.87	Preheat	Res23	Frflashers,markers,clearance,headlights
N9	Networks	R21.87	RJBoutswitch	Res24	Frflashers,markers,clearance,headlights
N10	Networks	R21.B	12VIgncustomer	Res25	Frflashers,markers,clearance,headlights

CIRCUITS LIST

CircuitID	Description	CircuitID	Description	CircuitID	Description
Res26	Frflashers,markers,clearance,headlights	Se46.B	Traillerparkbrake	spare22	
RF+	VSS	Se48.4	EntrancedoorSystem	spare23	
RF-	VSS	Se49.B	HVACpassengers	spare24	
RR+	VSS	Se50.4	EntrancedoorSystem	spare619	Spareswires
RR-	VSS	SE51.2	Cluster	Spk1_L	Speakers
Rx	Cantrack	Se51.Jmp	Jumper_Se51	Spk1_R	Speakers
Se2	TransmissionAlisson	Se53.C	Cluster	Spk2_L	Speakers
Se9	Kneeling,tag,lowbuoy	Se54.C	Cluster	Spk2_R	Speakers
Se11.Sig	Cluster	Se55.C	Cluster	Spk3_L	Speakers
Se11.Wrn	Cluster	Se56.4	WCLsystemGND	Spk3_R	Speakers
Se13.B	EngineECUVolvo	Se57.C	EngineECUVolvo	Spk4_L	Speakers
Se14A.B	EngineECUVolvo	Se63.1	ESP	Spk4_R	Speakers
Se14B.C	EngineECUVolvo	Se63.2	ESP	Spk5_L	Speakers
Se16.B	DaylightSensor	Se64.1	ESP	Spk5_R	Speakers
Se18.B	Brake,enginebrake,retarder	Se64.2	ESP	Spk6_L	Speakers
Se19_P.D	Brake,enginebrake,retarder	Se67.C	ESP	Spk6_R	Speakers
Se19_S.D	Brake,enginebrake,retarder	Se69.C	ESP	Spk9_L	Speakers
Se20.B	Cluster	Se74.3	TransmissionAlisson	Spk9_R	Speakers
Se21.2	HVACdefroster	Se79.4	Kneeling,tag,lowbuoy	Spk10_L	Speakers
Se23.C	HVACpassengers	Se89.A	CatchTank	Spk10_R	Speakers
Se24.2	HVACpassengers	Se94	WCL	Spk11_L	Speakers
Se24.3	HVACpassengers	Se100.4	WCL	Spk11_R	Speakers
Se25.2	HVACpassengers	SHIELD	BRIGADE	Spk12_L	Speakers
Se30.A	Engine&RJBcmpt.lights	SHIELD3	VSS	Spk12_R	Speakers
Se32.A	TransmissionAlisson	SHIELD4	VSS	Spk13_L	Speakers
Se32.B	TransmissionAlisson	Shield_149	Ureasystem	Spk13_R	Speakers
Se33.A	TransmissionAlisson	Shield_149A	Ureasystem	Spk14_L	Speakers
Se34.A	TransmissionAlisson	SHL1	VSS	Spk14_R	Speakers
Se34.B	TransmissionAlisson	SHL2	VSS	STO-LOCselenoid	WCL
Se35.A	TransmissionAlisson	So9.B	HVACpassengers	Supply	
Se35.B	TransmissionAlisson	SPARE	Trailer	Sw2.4	Frflashers,markers,clearance,headlights
Se37.1	ESP	spare10		Sw2.8	Frflashers,markers,clearance,headlights
Se37.2	ESP	spare11		Sw3.4	Cornering&foglights
Se38.1	ESP	spare12	Spareswires	Sw3.8	Cornering&foglights
Se38.2	ESP	spare13	Spareswires	Sw4.6	HazardSw
Se39.1	ESP	spare14	Spareswires	Sw5	EntrancedoorSystem
Se39.2	ESP	spare15	Spareswires	Sw5.B	EntrancedoorSystem
Se40.1	ESP	spare16	Spareswires	Sw6	EntrancedoorSystem
Se40.2	ESP	spare17		Sw6.B	EntrancedoorSystem
Se41	Cond.doorsw.	spare18		Sw7	Kneeling,tag,lowbuoy
Se43.2	HVACdefroster	spare19		Sw8.6	Indirectlights
Se43.4	HVACdefroster	spare20		Sw10A.6	Kneeling,tag,lowbuoy
Se45.2	Wipers&washer	spare21		Sw12.3	Destinationsigns

CIRCUITS LIST

CircuitID	Description	CircuitID	Description	CircuitID	Description
Sw12.4	Destinationsigns	Sw46	Engine&RJBcmpt.lights	Sw660.3	Rear_Galley
Sw12.8	Destinationsigns	Sw47	Engine&RJBcmpt.lights	Sw660.Jmp	Galley_Harness
Sw14.4	EngineECUVolvo	Sw48	Engine&RJBcmpt.lights	Sw661.3	Rear_Galley
Sw14.8	EngineECUVolvo	Sw49	Engine&RJBcmpt.lights	Sw661.Jmp	Galley_Harness
Sw16.4	Brake,enginebrake,retarder	Sw50	Engine&RJBcmpt.lights	Sw663.3	Rear_Galley
Sw16.6	Brake,enginebrake,retarder	Sw51	Engine&RJBcmpt.lights	Sw663.6	Rear_Galley
Sw17.4	EngineECUVolvo	Sw52	Engine&RJBcmpt.lights	SwPH.1	Driverwindow
Sw18A.6	LuggageDoorLock/Unlock	Sw55.1	Lavatory	SwPH.2B	Driverwindow
Sw20.4	WCL	Sw56.1	Lavatory	SwPH.3	Driverwindow
Sw20.8	WCL	Sw58.2	Ignition&enginestart	Tstat26.2	Preheat
Sw22.B	LuggageDoorLock/Unlock	Sw58.3	Engineshutdownsw.	TWU.3	WCL
Sw23.4	Readinglamps&chime	Sw58.5	Ignition&enginestart	Tx	Cantrack
Sw23.8	Readinglamps&chime	Sw58.7	Ignition&enginestart	USBcommunicationbetweenradio&display	
Sw24.4	Driverlights	Sw59.3	Ignition&enginestart	ve+	Cantrack
Sw24.8	Driverlights	Sw63A.4	Horn	WH	
Sw25.3	Lightsswitch	Sw64.6	Kneeling,tag,lowbuoy	WHITE	
Sw25.6	Readinglamps&chime	Sw70.2B		White	Destinationsigns
Sw26.4	Readinglamps&chime	Sw82.4	Masterrelay&12VIgn	white	
Sw26.6	Readinglamps&chime	Sw82.5	Masterrelay&12VIgn	WHT1	VSS
Sw27.4	ParcelrackA/Csystem	Sw83.Ign	12VIgn	WHT2	VSS
Sw27.8	ParcelrackA/Csystem	Sw83.Out	Ignition&enginestart	WHT3	VSS
Sw29.4	Readinglamps&chime	Sw83.Out1	Ignition&enginestart	WHT4	VSS
Sw29.6	Readinglamps&chime	Sw85.A1	Mirrors	WHT5	VSS
Sw29.8	Readinglamps&chime	Sw85.A3	Mirrors	YELLOW	BRIGADE
Sw34.1	EntrancedoorSystem	Sw85.B1	Mirrors		
Sw34.4	EntrancedoorSystem	Sw85.B2	Mirrors		
Sw38.6	Driverwindow	Sw85.B4	Mirror		
Sw39	Engine&RJBcmpt.lights	Sw97.N1	Readinglamps&chime		
Sw40.B	Traillerparkbrake	Sw117.4	Ignition&enginestart		
Sw41.A1	Mirrors	Sw117.8	Ignition&enginestart		
Sw41.A3	Mirrors	Sw122.8	LDW		
Sw41.B1	Mirrors	Sw124.8	Destinationsigns		
Sw41.B2	Mirrors	Sw152.B	Firesuppression		
Sw41.B4	Mirror	Sw156.4	Mirrors		
Sw42.2	WCL	Sw156.5	Mirrors		
Sw42.3	WCL	Sw157.6	Sunvisor		
Sw42.4	WCL	Sw158.6	Sunvisor		
Sw42.5	WCL	Sw161.2	Driverlights		
Sw42.6	WCL	Sw162.6	RoofHatcheswFan		
Sw42.7	WCL	Sw164.3	EmergencyLight		
Sw43.6	Kneeling,tag,lowbuoy	Sw164.8	EmergencyLight		
Sw44	Engine&RJBcmpt.lights	Sw629.3	Destinationsigns		
Sw45	Engine&RJBcmpt.lights	Sw629.8	Destinationsigns		

BREAKERS LIST

No	Location	Part #	Function	Rating	Page						
CB1	RJB	563708	24WUPFJB	90amp	3.1						
CB2	RJB	568113	12ECURJB&12VDFJB	70amp	3.1						
CB3	RJB	563708	HVACpassengers	90amp	3.1						
CB5	RJB	563708	24WUPRJB	90amp	3.1						
CB6	RJB	568113	24VDRJB&WCL	70amp	3.1						
CB8	RJB	563708	12WUPRJB	90amp	3.1						
CB9	RJB	563705	Urea	40amp	3.1						
CB10	RJB	568114	VECFPower	150amp	3.1						
CB11	RJB	568127	VSS	50amp	3.1						
CB12	RJB	563708	24VDInverter/Charger	90amp	3.1						
CB13	RJB	563708	24VDInverter/Charger	90amp	3.1						
CB14	FJB_VECF	564464	WiperSystem	20amp	4.3						
CB15	FJB_VECF	564464	MuxPower	20amp	4.3						
CB16	FJB_VECF	564464	MuxPower	20amp	4.3						
CB17	FJB_VECF	564464	MuxPower	20amp	4.3						
CB18	FJB_VECF	564464	MuxPower	20amp	4.3						
CB19	FJB_VECF	564464	MuxPower	20amp	4.3						
CB20	FJB_VECF	564464	DefrosterUnit	20amp	4.3						
CB21	FJB_VECF	564464	BreakerELD	20amp	4.3						
CB22	FJB_VECF	564464	VDS	20amp	4.3						
CB23	FJB_VECF	564464	BIO	20amp	4.3						
CB48	FJB_VECF	564464	Wipers	20amp	4.2						
CB128	RJB_VECR	564342	24VDFJB	30amp	5.1						
CB_DcDc	4rd_Lugg_Cmp	564238	Plasma	5amp	60.1						

BREAKERS LIST

No	Location	Part #	Function	Rating	Page						
CB1	RJB	563708	24WUPFJB	90amp	3.1						
CB2	RJB	568113	12ECURJB&12VDFJB	70amp	3.1						
CB3	RJB	563708	EVAP FAN	90amp	3.1						
CB5	RJB	564902	24WUPRJB	120amp	3.1						
CB6	RJB	568113	24VDRJB&WCL	70amp	3.1						
CB8	RJB	563708	12WUPRJB	90amp	3.1						
CB9	RJB	563705	Urea	40amp	3.1						
CB10	RJB	568114	12WupFJB	150amp	3.1						
CB11	RJB	568127	VSS	50amp	3.1						
CB12	RJB	563708	24VDInverter/Charger	90amp	3.1						
CB13	RJB	563708	24VDInverter	90amp	3.1						
CB14	FJB_VECF	564464	WiperSystem	20amp	4.3						
CB15	FJB_VECF	564464	MuxPower	20amp	4.3						
CB16	FJB_VECF	564464	MuxPower	20amp	4.3						
CB17	FJB_VECF	564464	MuxPower	20amp	4.3						
CB18	FJB_VECF	564464	MuxPower	20amp	4.3						
CB19	FJB_VECF	564464	MuxPower	20amp	4.3						
CB20	FJB_VECF	564464	DefrosterUnit	20amp	4.3						
CB21	FJB_VECF	564464	BreakerELD	20amp	4.3						
CB22	FJB_VECF	564464	VDS	20amp	4.3						
CB23	FJB_VECF	564464	BIO	20amp	4.3						
CB48	FJB_VECF	564464	Wipers	20amp	4.2						
CB128	RJB_VECR	564342	24VDFJB	30amp	5.1						
CB_DcDc	4rd_Lugg_Cmp	564238	Plasma	5amp	60.1						

BREAKERS LIST

No	Location	Part #	Function	Rating	Page						
CB1	RJB	563708	24WupFJB	90amp	3.1						
CB2	RJB	568113	12VDFJBRJB	70amp	3.1						
CB3	RJB	563708	EvapFan	90amp	3.1						
CB5	RJB	564902	24WupRJB	120amp	3.1						
CB6	RJB	568113	24VDRJBWCL	70amp	3.1						
CB8	RJB	563708	12WupRJB	90amp	3.1						
CB9	RJB	563705	ACM	40amp	3.1						
CB10	RJB	568114	12WupFJB	150amp	3.1						
CB11	RJB	568127	VSS	50amp	3.1						
CB12	RJB	563708	Invt/Charg	90amp	3.1						
CB13	RJB	563708	2InverterOR1Inverter	90amp	3.1						
CB14	FJB_VECF	564464	WiperSystem	20amp	4.3						
CB15	FJB_VECF	564464	MuxPower	20amp	4.3						
CB16	FJB_VECF	564464	MuxPower	20amp	4.3						
CB17	FJB_VECF	564464	MuxPower	20amp	4.3						
CB18	FJB_VECF	564464	MuxPower	20amp	4.3						
CB19	FJB_VECF	564464	MuxPower	20amp	4.3						
CB20	FJB_VECF	564464	DefrosterUnit	20amp	4.3						
CB21	FJB_VECF	564464	BreakerELD	20amp	4.3						
CB22	FJB_VECF	564464	VDS	20amp	4.3						
CB23	FJB_VECF	564464	BIO	20amp	4.3						
CB48	FJB_VECF	564464	Wipers	20amp	4.2						
CB128	RJB_VECR	564342	24VDFJB	30amp	5.1						
CB301	VECT	564399	Trailer	20amp	26.4						
CB_DcDc	4rd_Lugg_Cmpt	564238	Plasma		60.1						
CBPass:2					23.1						
CBPass:3					23.1						
CBPass:4					23.1						
CBPass:5					23.1						

CONNECTORS LIST

No	Location	Part #	Gender	No	Location	Part #	Gender
24SS_OP	Parcel_Rack_LH	563071	male	A36.JC	Front	562957	male
24SS_OP	Parcel_Rack_LH	563040	female	A36A.JA	Front	564325	male
24SS_OP_2	Parcel_Rack_LH	563071	male	A36A.JB	Front	562767	male
24SS_OP_2	Parcel_Rack_LH	563040	female	A39.P101	Parcel_Rack_LH	563201	male
A1	RJB	563975	male	A39.P901	Parcel_Rack_LH	563953	male
A2	FJB	563984	male	A50	P_Rack	563996	female
A5	Service_Cmpt	562428	female	A60.A	P_Rack	563071	male
A6	Engine_Cmpt	562427	male	A60.B	P_Rack	562706	female
A7	Rear_Axle_Cmpt	563979	male	A60.C	P_Rack	901110	male
A8.A	Dash	564698	male	A60.D	P_Rack	901110	male
A9.Cx1	FJB	564041	female	A60.E	P_Rack	560799	female
A9.Cx2	FJB	563678	male	A60.F	P_Rack	bidon	male
A9.Cx3	FJB	564037	female	A61.A	Parcel_Rack_LH	562464	male
A9.Cx4	FJB	564038	female	A61.B	Parcel_Rack_LH	562465	male
A10.X1	Engine_Cmpt	563135	male	A63	Roof	562090	male
A10.X3	Engine_Cmpt	563134	female	A65.A	Parcel_Rack_LH	563025	male
A11	Dash	563142	male	A65.B4	Parcel_Rack_LH	bidon	male
A12.A	DriverArea	564699	male	A65.B5	Parcel_Rack_LH	bidon	male
A14.A	Dash	562765	male	A65.B6	Parcel_Rack_LH	bidon	male
A14.B	Dash	562764	male	A65.D	Parcel_Rack_LH	bidon	male
A14.C	Dash	562767	male	A65.E	Parcel_Rack_LH	563071	male
A14.D	Dash	562766	male	A65.G1	Parcel_Rack_LH	563071	male
A15	Dash	562464	male	A65.G2	Parcel_Rack_LH	563071	male
A19	LH_Console	562878	female	A65.G3	Parcel_Rack_LH	563071	male
A20	FrontRoof	562465	male	A65.H1	Parcel_Rack_LH	561716	female
A21.A	Dash	564038	female	A65.H2	Parcel_Rack_LH	561716	female
A21.B	Dash	564700	male	A65.H3	Parcel_Rack_LH	561716	female
A22	Dash	564004	male	A65.J	Parcel_Rack_LH	562465	male
A23	P_Rack	564004	male	A69L.A	Parcel_Rack_LH	563025	male
A24	P_Rack	564004	male	A69L.B1	Parcel_Rack_LH	bidon	male
A25	Parcel_Rack_LH	563025	male	A69L.B2	Parcel_Rack_LH	bidon	male
A26.P1	Enginecmpt.	562350	male	A69L.B3	Parcel_Rack_LH	bidon	male
A26.P2	Enginecmpt.	563322	female	A69L.B4	Parcel_Rack_LH	bidon	male
A26.P4	Enginecmpt.	568088	male	A69L.C	Parcel_Rack_LH	bidon	male
A27	Service_Cmpt	562929	male	A69R.A	Parcel_Rack_RH	563025	male
A28	Service_Cmpt	562928	male	A69R.B1	Parcel_Rack_RH	bidon	male
A29	FJB	564004	male	A69R.B2	Parcel_Rack_RH	bidon	male
A31	P_Rack	564004	male	A69R.B3	Parcel_Rack_RH	bidon	male
A34.J	Enginecmpt.	568118	male	A69R.B4	Parcel_Rack_RH	bidon	male
A34.K	Enginecmpt.	564270	male	A69R.C	Parcel_Rack_RH	bidon	male
A34.L	Enginecmpt.	564269	male	A70a.A	Parcel_Rack	561540	female
A36.JA	Front	562767	male	A71	Dash	563884	male
A36.JB	Front	562765	male	A77	Parcelrack	564547	male

CONNECTORS LIST

No	Location	Part #	Gender	No	Location	Part #	Gender
A78	Parcelrack	562583	female	A121.Vsb	Dashboard	563678	male
A79	Parcelrack	562583	female	A121.Vsc	Dashboard	564037	male
A80	Parcelrack	562479	female	A121.Vsd	Dashboard	564118	male
A81.CN1	FJB	562767	male	A122.A	Parcel_Rack_LH	563960	male
A81.CN3A	FJB	564741	male	A122.B	Parcel_Rack_LH	563962	male
A81.CN3B	FJB	564742	male	A122.C1	Parcel_Rack_LH	563956	male
A83.A	FJB	565970	male	A122.C2	Parcel_Rack_LH	563957	male
A95.A	P_Rack	564489	female	A122.C3	Parcel_Rack_LH	563958	male
A95.B	P_Rack	562706	female	A123.A	Parcel_Rack_LH	563960	male
A95.C	P_Rack	562706	female	A123.B	Parcel_Rack_LH	563962	male
A96.A	Front	563678	male	A123.C1	Parcel_Rack_LH	563956	male
A96.B	Front	562795	male	A123.C2	Parcel_Rack_LH	563957	male
A97A	Front	563226	male	A123.C3	Parcel_Rack_LH	563958	male
A97A	Front	563613	female	A124.A	Parcel_Rack_LH	563960	male
A97B	Front	563226	male	A124.B	Parcel_rack	563962	male
A97B	Front	563613	female	A124.C1	Parcel_rack	563956	male
A97S.A1	Front	564401	male	A124.C2	Parcel_rack	563957	male
A97S.A2	Front	564402	male	A124.C3	Parcel_rack	563958	male
A97S.A3	Front	564403	male	A127	Dashboard	562957	male
A99	Dash	564205	male	A128	Dash	563878	male
A100	FrontAxelAnt	563515	male	A129	Parcel_Rack_LH	563878	male
A101	FrontAxelAnt	563515	male	A130	Driver_Area	563226	male
A102	FrontAxelAnt	563515	male	A131.A	Engine_Cmpt	561782	male
A107	EngineCmpt.	560336	male	A131.B	Engine_Cmpt	561781	female
A108	RJB	562766	male	A137A	Condensercmpt.	20429843	male
A109A	FJB	564141	male	A138	Cond_Cmpt	563787	male
A111	Lavatory	562550	female	A150	Modesty_LH	562957	male
A114A	Bumper	564252	male	A150LH	Modesty_LH	562957	male
A116	Dash	563872	female	A150RH	Modesty_RH	562957	male
A120.A	Dash	563960	male	A152.A	Parcelrack	561550	male
A120.B	Dash	563962	male	A152.B	Parcelrack	563071	male
A120.C1	Dash	563956	male	A152.C	Parcelrack	563071	male
A120.C2	Dash	563957	male	A152.D	Parcelrack	563071	male
A120.C3	Dash	563958	male	A152.E	Parcelrack	563071	male
A120.USB_COM	Dash	563878	male	A152.F	Parcelrack	563071	male
A120A.J1	Dashboard	563525	male	A152.G	Parcelrack	563071	male
A120A.J2	Dashboard	563526	female	A152.H	Parcelrack	563071	male
A120A.J3	Dashboard	563527	female	A152.I	Parcelrack	563071	male
A120A.USB	Dash	563878	male	A152.J	Parcelrack	563071	male
A120A.USB_COM	Dash	563878	male	A152.K	Parcelrack	562779	male
A121.B	Dash	bidon	male	A152.L	Parcelrack	562779	male
A121.USB	Dash	563878	male	A162.A	Front_Roof	561690	male
A121.Vsa	Dashboard	563679	male	A162.B	Front_Roof	561782	male

CONNECTORS LIST

No	Location	Part #	Gender	No	Location	Part #	Gender
A164.A	Front_Roof	561690	male	AE49.J3	RJB	565957	male
A164.B	Front_Roof	561782	male	AE50.J1	RJB	563679	male
A166	Front_Roof	561637	male	AE50.J2	RJB	564037	male
A614.A	P_RACK	561550	male	AE50.J3	RJB	565957	male
A614.C1	P_RACK	563071	male	AE51.J1	RJB	563679	male
A614.C2	P_RACK	563071	male	AE51.J2	RJB	564037	female
A614.C3	P_RACK	563071	male	AE51.J3	RJB	565957	male
A614.C4	P_RACK	563071	male	AE52.J1	RJB	563679	male
A614.C5	P_RACK	563071	male	AE52.J2	RJB	564037	female
A614.C6	P_RACK	563071	male	AE52.J3	RJB	565957	male
A614.I/O	Parcel_Rack	bidon	male	AE53.J1	RJB	563679	male
A614.P1	Parcel_Rack	562783	male	AE53.J2	RJB	564037	female
A614.P2	Parcel_Rack	562783	male	AE53.J3	RJB	565957	male
A614.P3	Parcel_Rack	562783	male	AE54.J1	Evaporatorcmpt.	563679	male
AE41.J1	FJB	563679	male	AE54.J2	Evaporatorcmpt.	564037	female
AE41.J2	FJB	564037	female	AE54.J3	Evaporatorcmpt.	565957	male
AE41.J3	FJB	564004	male	AE55.J1	Dash	563679	male
AE42.J1	FJB	563679	male	AE55.J2	Dash	564037	female
AE42.J2	FJB	564037	female	AE55.J3	Dash	564004	male
AE42.J3	FJB	564004	male	AE56.J1	Dash	563679	male
AE43.J1	FJB	563679	male	AE56.J2	Dash	564037	male
AE43.J2	FJB	564037	male	AE56.J3	Dash	564004	male
AE43.J3	FJB	565957	male	AE57.J1	WCLcmpt.	563679	male
AE44.J1	FJB	563679	male	AE57.J2	WCLcmpt.	564037	male
AE44.J2	FJB	564037	female	AE57.J3	WCLcmpt.	564004	male
AE44.J3	FJB	565957	male	AE58.J1	P_Rack	563679	male
AE45.J1	FJB	563679	male	AE58.J2	P_Rack	564037	male
AE45.J2	FJB	564037	female	AE58.J3	P_Rack	565957	male
AE45.J3	FJB	565957	male	Alt_LL.B	Engine_Cmpt	564410	female
AE46.J1	FJB	563679	male	Alt_UR.B	Engine_Cmpt	564469	female
AE46.J2	FJB	564037	female	AltLL.A	Enginecmpt.	563746	female
AE46.J3	FJB	565957	male	AltLL.B	Enginecmpt.	560815	female
AE47.J1	RH_console	563679	male	AltLL.C	Enginecmpt.	564469	female
AE47.J2	RH_console	564037	female	AltLR.A	enginecmpt.	563746	female
AE47.J3	RH_console	565957	male	AltLR.B	Enginecmpt.	560815	female
AE48.J1	RH_console	563679	male	AltLR.C	Enginecmpt.	564469	female
AE48.J2	RH_console	564037	female	AltUR.A	Enginecmpt.	563746	female
AE48.J3	RH_console	565957	male	AltUR.B	Enginecmpt.	560815	female
AE49.J1	RJB	563679	male	AltUR.C	Enginecmpt.	564469	female
AE49.J2	RJB	564037	male	B85	Engine_Cmpt	563815	male

CONNECTORS LIST

No	Location	Part #	Gender	No	Location	Part #	Gender
B96	Engine_Cmpt	563821	male	C16	RJB	561605	female
B96B	Engine_Cmpt	563823	male	C17	RJB	560195	male
B97	Engine_Cmpt	563816	male	C17	RJB	560169	female
B98	Engine_Cmpt	563817	male	C18	FJB	561986	male
B99	Engine_Cmpt	563815	male	C18	FJB	561987	female
B115A	Enginecmpt.	564226	male	C19	RJB	561986	male
B142C	Urea_Cmpt	563515	male	C19	RJB	561987	female
B310	Enginecmpt.	565967	male	C20A	Evap_Cmpt	562485	male
C1	FJB	563589	male	C20A	Evap_Cmpt	562486	female
C1	FJB	563590	female	C20B	Evap_Cmpt	562485	male
C1S	FJB	563589	male	C20B	Evap_Cmpt	562486	female
C1S	FJB	563590	female	C22	FJB	561986	male
C2	Service_Cmpt	563580	male	C22	FJB	561987	female
C2	Service_Cmpt	563581	female	C23	Evaporatorcmpt.	564034	male
C2A	FJB	563580	male	C23	Evaporatorcmpt.	564035	female
C2A	FJB	563581	female	C24_plug	Evap_Cmpt	561690	male
C2B	FJB	563580	male	C24_socket	Evap_Cmpt	561566	female
C2B	FJB	563581	female	C25	P_Rack	561734	male
C3_plug	RJB	563589	male	C25	P_Rack	561735	female
C3_socket	RJB	563590	female	C25A	P_Rack	561734	male
C3AP	FJB	563589	male	C25A	P_Rack	561735	female
C3AP	FJB	563590	female	C26	Ureacmpt.	563226	male
C3AS	FJB	563589	male	C26	Ureacmpt.	563613	female
C3AS	FJB	563590	female	C26A	Ureacmpt.	568110	male
C3S	RJB	563593	male	C26A	Ureacmpt.	568109	female
C3S	RJB	563590	female	C26B	Ureacmpt.	563227	male
C4	FJB	563580	male	C26B	Ureacmpt.	563614	female
C4	FJB	563581	female	C27	Front	563618	male
C5	FJB	563589	male	C27	Front	563616	female
C5	FJB	563590	female	C28	Dash	561986	male
C8	FJB	568112	male	C28	Dash	561987	female
C8	FJB	568111	female	C29	3rd_Lugg_Cmpt	563652	female
C9	RJB	561986	male	C29	4rd_Lugg_Cmpt	563651	male
C9	RJB	561987	female	C30	3rd_Lugg_Cmpt	561710	male
C10	Engine_Cmpt	562581	male	C30	3rd_Lugg_Cmpt	561709	female
C10	Engine_Cmpt	562583	female	C31W	Lugg_Cmpt	563227	male
C12	Engine_Cmpt	562581	male	C31W	Lugg_Cmpt	563614	female
C12	Engine_Cmpt	562583	female	C32	Lavatory	561734	male
C14	FJB	563580	male	C32	Lavtory	561735	female
C14	FJB	563581	female	C32W	Lugg_Cmpt	561734	male
C15A	Evaporatotcmpt.	568109	female	C32W	Lugg_Cmpt	561735	female
C15A	Evapotatorcmpt.	568110	male	C33	WCLcmpt.	564034	male
C16	RJB	561577	male	C33	WCLcmpt.	564035	female

CONNECTORS LIST

No	Location	Part #	Gender	No	Location	Part #	Gender
C34	Dash	561986	male	C59	RJB	561642	female
C34	Dash	561987	female	C63	Entrace_Door	562581	male
C35	Dash	561986	male	C63	Entrace_Door	562583	female
C35	Dash	561987	female	C64	Enginecmpt.	568110	male
C36	FJB	561986	male	C64	Enginecmpt.	568109	female
C36	FJB	561987	female	C66_plug	Evap_Cmpt	561577	male
C37	P_Rack	561986	male	C66_socket	Evap_Cmpt	561605	female
C37	P_Rack	561987	female	C71	FJB	561646	male
C38	P_Rack	561986	male	C87	Engine_Cmpt	562485	male
C38	P_Rack	561987	female	C87	Engine_Cmpt	562486	female
C38A	P_Rack	561515	male	C88	WCL_Cmpt.	563226	male
C38A	P_Rack	561552	female	C88	WCL_Cmpt.	563613	female
C39	Parcelrack	562503	male	C90	RJB	563582	male
C39	Parcelrack	562507	female	C90	RJB	563583	female
C39A	Firesuppressioncmpt.	561782	male	C91	RJB	562285	male
C39A	Firesuppressioncmpt.	561781	female	C91	RJB	562282	female
C40W	P_Rack	561515	male	C94	FJB	563589	male
C40W	P_Rack	561552	female	C99	Enginecmpt.	562581	male
C41	RJB	561782	male	C99	Enginecmpt.	562583	female
C41	RJB	561781	female	C100	Evaporatorcmpt.	562477	male
C42	Front	562285	male	C100	Evaporatorcmpt.	562479	female
C42	Front	562282	female	C100S	Evaporator_Cmpt.	562477	male
C43	Front	562581	male	C100S	Evaporator_Cmpt.	562479	female
C43	Front	562583	female	C107A	Enginecmpt.	562885	female
C44_plug	FJB	561577	male	C107A	Enginecmpt.	562884	female
C44_socket	FJB	561605	female	C107B	Enginecmpt.	562885	female
C45	Front	561646	male	C107B	Enginecmpt.	562884	female
C45	Front	561645	female	C107C	Enginecmpt.	562885	female
C46	3rdlugg.cmpt.	562549	male	C107C	Enginecmpt.	562884	female
C46	3rdlugg.cmpt.	562550	female	C110	Dash	568110	male
C47	FJB	565207	male	C110	Dash	568109	female
C48	RJB	565208	male	C119A	Rear_engine_door	568110	male
C49	FJB	562005	male	C119A	Rear_engine_door	568109	female
C49	FJB	561714	female	C129	Dashboard	562464	male
C54	Engine_Cmpt.	563226	male	C129	Dashboard	565871	female
C54	Engine_Cmpt.	563613	female	C131A	Engine_Cmpt	561782	male
C54A	Ureacmpt.	568110	male	C131A	Engine_Cmpt	561781	female
C54A	Ureacmpt.	568109	female	C131B	Engine_Cmpt	561782	male
C54B	Engine_Cmpt.	562477	male	C131B	Engine_Cmpt	561781	female
C54B	Engine_Cmpt.	562479	female	C150	Modesty_LH	562957	male
C55	Evap_Cmpt	561577	male	C150	Modesty_LH	564406	female
C55	Evap_Cmpt	561605	female	C152	Cond_Cmpt	561611	male
C59	RJB	561643	male	C152	Cond_Cmpt	561610	female

CONNECTORS LIST

No	Location	Part #	Gender	No	Location	Part #	Gender
C173	Modesty_LH	563040	female	C769	Parcel_Rack	901062	male
C193_plug	RJB	563589	male	C769	Parcel_Rack	901283	female
C193_socket	RJB	563590	female	C777	Dashboard	562581	male
C194	FJB	563589	male	C777	Dashboard	562583	female
C194	FJB	563590	female	C_A69R	Parcel_Rack	563025	male
C222	FJB	562477	male	C_Audio_HDMI_L	Parcel_Rack	901062	male
C222	FJB	562479	female	C_Audio_HDMI_L	Parcel_Rack	901283	female
C279	Service_Cmpt	562479	female	C_Audio_HDMI_R	Parcel_Rack	901062	male
C355	RJB	563582	male	C_Audio_HDMI_R	Parcel_Rack	901283	female
C355	RJB	565887	female	C_AUX	Parcelrack	563071	male
C380A	Dash	564222	male	C_AUX	Parcelrack	563040	female
C380A	Dash	564224	female	C_LineOut	Parcelrack	563962	male
C381	Parcel_Rack	561847	male	C_LineOut	Parcelrack	564489	female
C382	Under_Seat	561580	male	C_Mo9	Evap_Cmpt	561577	male
C382	Under_Seat	561582	female	C_Mo9	Evap_Cmpt	561605	female
C397	RJB	562285	male	CCAN1	FJB	562650	male
C397	RJB	562282	female	CCAN1	FJB	562649	female
C463	Rearaxlecmpt.	568111	male	CCAN2	FJB	562650	male
C463	Rearaxlecmpt.	568112	female	CCAN2	FJB	562649	female
C464	FJB	564222	male	CCAN3	FJB	562650	male
C464	FJB	564224	female	CCAN3	FJB	562649	female
C464A	Dash	564222	male	CCAN4	FJB	562650	male
C464A	Dash	564224	female	CCAN4	FJB	562649	female
C464B	FJB	564222	male	CCust	RJB	562477	male
C464B	FJB	564224	female	CCust	RJB	562479	female
C465	Parcelrack	562581	male	CFHPR1	Parcelrack	564560	male
C465	Parcelrack	562583	female	CP1	Passenger_Area	561782	male
C542	Parcelrack	561550	male	CP1	Passenger_Area	561781	female
C542	Parcelrack	561667	female	CP2	Passenger_Area	561782	male
C543	LH_Parcel_Rack	561607	male	CP2	Passenger_Area	561781	female
C543	LH_Parcel_Rack	561606	female	CP3	Passengersarea	561782	male
C564	Parcelrack	562503	male	CP3	Passengersarea	561781	female
C564	Parcelrack	562507	female	CP4	Passenger_Area	561782	male
C566	Parcelrack	562503	male	CP4	Passenger_Area	561781	female
C566	Parcelrack	562507	female	CP5	Passenger_Area	561782	male
C567	Parcelrack	562503	male	CP5	Passenger_Area	561781	female
C567	Parcelrack	562507	female	CSX1	Engine_Cmpt	563135	male
C614	Passenger_Area	563071	male	CSX1	Engine_Cmpt	563134	female
C614	Passenger_Area	563040	female	CSX3	Engine_Cmpt	563135	male
C615	Passenger_Area	563071	male	CSX3	Engine_Cmpt	563134	female
C615	Passenger_Area	563040	female	CT_IN	Rear_Vehicle	560167	male
C768	Parcel_Rack	901062	male	CT_IN	Rear_Vehicle	560159	female
C768	Parcel_Rack	901283	female	CT_Out	Rear_Vehicle	560233	female

CONNECTORS LIST

No	Location	Part #	Gender	No	Location	Part #	Gender
EI	Enginecmpt.	563739	male	L72	Rear_Vehicle	562155	male
L1A	Enginecmpt.	560774	male	L74	Rear_Vehicle	562155	male
L16.A	Frontroof	562615	female	L75	Rearenginedoor	562155	male
L16.B	Frontroof	562615	female	L76	Rear_engine_door	562155	male
L17.A	Frontroof	562615	female	L81.A	Rear_Vehicle	562835	female
L17.B	Frontroof	562615	female	L81.B	Rear_Vehicle	562834	male
L18	Entrance_Door	563590	female	L82A	Rearvehicule	562348	female
L21	Upper_front	560605	female	L83A	Rearvehicule	562348	female
L22	Upper_front	560605	female	L84	Rear_roof	560605	female
L23	Upper_front	560605	female	L85	Rear_roof	560605	female
L24	Upper_front	560605	female	L86	Rear_roof	560605	female
L25	Upper_front	560605	female	L87	Rear_roof	560605	female
L26	Upper_front	560605	female	L88	Rear_roof	560605	female
L27	Upper_front	560605	female	L89	Rear_roof	560605	female
L52	Parcelrack	560898	male	L90	Rear_roof	560605	female
L52	Parcelrack	560900	female	L93.B	Engine_Cmpt.	563069	female
L52A	Parcelrack	560898	male	L94.B	Engine_Cmpt.	563069	female
L53	Parcelrack	560898	male	L95	Outside_Front_LH	562485	male
L53	Parcelrack	560900	female	L95A	Outside_Front_LH	562485	male
L53A	Parcelrack	560898	male	L96	Outside_Front_RH	562485	male
L54	Parcelrack	560898	male	L96A	Outside_Front_RH	562485	male
L54	Parcelrack	560900	female	L140	Lavatory	561247	male
L54A	Parcelrack	560898	male	L142	Lavatory	562006	female
L55	Parcelrack	560898	male	L172RH	Modesty_RH	564719	male
L55	Parcelrack	560900	female	L173	Parcelrack	563590	female
L55A	Parcelrack	560898	male	L174A	Parcelrack	563590	female
L56	Parcelrack	560898	male	L175	Engine_Cmpt.	563590	female
L56	Parcelrack	560900	female	L176	5th_Lugg_Cmpt	561247	male
L56A	Parcelrack	560898	male	L177	5th_Lugg_Cmpt	561247	male
L57	Parcelrack	560898	male	L178	3rd_Lugg_Cmpt	561247	male
L57	Parcelrack	560900	female	L179	3rd_Lugg_Cmpt	561247	male
L57A	Parcelrack	560898	male	L180	2nd_Lugg_Cmpt	561247	male
L58	Parcelrack	560898	male	L181	2nd_Lugg_Cmpt	561247	male
L58	Parcelrack	560900	female	L182	1st_Lugg_Cmpt	561247	male
L58A	Parcelrack	560898	male	L183	1st_Lugg_Cmpt	561247	male
L63	Front_Side_LH	562155	male	L184	Servicecmpt.	561247	male
L64	Outside_Front_RH	562155	male	L185.A	Servicecmpt.	561539	male
L65	Outside_Front_LH	562155	male	L185.B	Servicecmpt.	561539	male
L66	Out_Side_Front_LH	562155	male	L186.A	Dash	561539	male
L67	4th_Lugg_Cmpt	562155	male	L186.B	Dash	561539	male
L68	4th_Lugg_Cmpt	562155	male	L187	Engine_Cmpt	561690	male
L69	4th_Lugg_Cmpt	562155	male	L188	Service_Cmpt	562486	female
L70	4th_Lugg_Cmpt	562155	male	L199	Enginecmpt.	562848	male

CONNECTORS LIST

No	Location	Part #	Gender	No	Location	Part #	Gender
L204	Parcel_Rack_RH	562803	male	R3	RJB	563409	male
L205	Enginecmpt.	562485	male	R4	FJB	564496	male
L206	Parcel_Rack_RH	562803	male	R12	Evap_Cmpt	563409	male
L282	Engine_Cmpt	561690	male	R16	RJB	564496	male
L285.A	Rear_Vehicle	562835	female	R20	RJB	564496	male
L285.B	Rear_Vehicle	562834	male	R26	Evap_Cmpt	564496	male
L286.A	Rear_Vehicle	562835	female	R29	RJB	563409	male
L286.B	Rear_Vehicle	562834	male	R30	FJB	564496	male
L290	Engine_door	562565	female	R31	FJB	564496	male
L291	Engine_door	562565	female	R34	RJB	564210	male
L298A	Enginecmpt.	563590	female	R36	Dash	564496	male
L306	RJBcmpt.	561247	male	R37	Dash	564496	male
L319	Under_WCL_platform	561247	male	R38	FJB	564496	male
L350A.A	Rearaxlecmpt.	564552	male	R40	RJB	564496	male
L350A.B	Rearaxlecmpt.	563340	male	R47	Parcelrack	564496	male
Mic_Driver_1.A	Parcel_rack	560999	male	R_12VISS	Parcel_rack	564496	male
Mic_Driver_2.A	Parcel_rack	560999	male	Res3.A	RJB	563590	female
Mic_Guide_1.A	Parcel_rack	560999	male	Res4	FJB	563590	female
Mic_Guide_3.A	Parcel_rack	560999	male	Res6	FJB	563590	female
Mo12	Engine_Cmpt	561690	male	Res6A	FJB	563589	male
Mo13	Engine_Cmpt	561690	female	Res6A	FJB	563590	female
Mo14	Engine_Cmpt	561566	female	Res6B	FJB	563589	male
Mo15	Front_Ceiling	563517	female	Res6B	FJB	563590	female
Mo16	Front_Ceiling	563517	female	Res15	Engine_Cmpt	561782	male
Mo17	RH_Console	562350	male	Res7	Engine_Cmpt	563590	female
Mo65	Enginecmpt.	568089	male	Res31	Ureacmpt.	562350	male
Mo67	Enginecmpt.	568089	male	Res32	Ureacmpt.	563764	female
Mo68	Enginecmpt.	568089	male	Se13	Engine_Cmpt	562350	male
Mo69	Enginecmpt.	568089	male	Se14.A	Driver_Area	561782	male
Mo70	Enginecmpt.	568089	male	Se14.B	Driver_Area	561781	female
Mo71	Enginecmpt.	568089	male	Se18	Servicecmpt.	561566	female
Mo72	Enginecmpt.	568089	male	Se19_P	Service_Cmpt	563677	male
Mo73	Enginecmpt.	568089	male	Se19_S	Service_Cmpt	563677	male
PC1	FJB	562650	male	Se23	Engine_Cmpt	563159	male
PC1	FJB	562649	female	Se24	Evap_Cmpt	563758	female
PF	FJB	561782	male	Se25	Passenger_Area	561248	female
PF	FJB	561781	female	Se28	Pneumatic_plate	561690	male
PF1	Passenger_Area	561782	male	Se29	Engine_Cmpt	561566	female
PF1	Passenger_Area	561781	female	Se30	Enginedoor	562877	female
PR	Parcelrack	561782	male	Se31	Enginedoor	562877	female
PR	Parcelrack	561781	female	Se32	Rear_Axle_Cmpt	562426	male
PR1	Passenger_Area	561782	male	Se33	Rear_Axle_Cmpt	562856	male
PR1	Passenger_Area	561781	female	Se35	Rear_Axle_Cmpt	562426	male

CONNECTORS LIST

No	Location	Part #	Gender	No	Location	Part #	Gender
Se36	Rear_Axle_Cmpt	562427	male	spBar13	Enginecmpt.	564135	male
Se37	Front_Axle_LH	641132	female	spBar14	Enginecmpt.	564135	male
Se38	Front_Axle_RH	641132	female	spBar15	Enginecmpt.	564135	male
Se39	Rear_Axle_LH	641132	female	spBar16	Enginecmpt.	564135	male
Se40	Rear_Axle_LH	641132	female	spBar19	Condensorcmpt.	564135	male
Se41	Condensor_cmpt.	562877	female	spBar20	Condensorcmpt.	564135	male
Se46	Rearaxlecmpt.	562348	female	spBar21	Condensorcmpt.	564135	male
Se63	Rearaxlecmpt.	641132	female	spBar22	Enginecmpt.	564135	male
Se64	Rearaxlecmpt.	641132	female	spBar23	Enginecmpt.	564135	male
Se65	Dash	564042	female	spBar24	Enginecmpt.	564135	male
Se66	FJB	564039	female	SpkDr_L	Parcel_Rack_LH	563994	male
Se67	Frontaxlecmpt.	563159	female	SpkDr_R	Parcel_Rack_RH	563994	male
Se69	Frontaxlecmpt.	563159	female	Sub1.A	Passenger_Area	564004	female
Se74	Rear_Axle_Cmpt	563340	male	Sub2.A	Passenger_Area	564004	female
Se79	Front_Axle	563340	male	Sw10A	Dash	563498	male
Se100	WCLdoor	562479	female	Sw12	Dash	563498	female
So7	Service_Cmpt	561690	male	Sw14	Dash	563498	male
So8	Servicecmpt.	641385	male	Sw16	Dash	563498	male
So9	Enginecmpt.	560016	female	Sw17	Dash	563498	male
So10	Cond_Cmpt	562485	male	Sw18A	Dash	563498	male
So11	Cond_Cmpt	561566	female	Sw20	Dash	563498	male
So13	Evap_Cmpt	563204	female	Sw23	Dash	563498	female
So14	Servicecmpt.	641385	male	Sw24	Dash	563498	male
So15	Servicecmpt.	641385	male	Sw25	Dash	563498	male
So16	Servicecmpt.	641385	male	Sw26	Dash	563498	female
So17	Servicecmpt.	562848	male	Sw27	Dash	563498	male
So20	Servicecmpt.	641385	male	Sw29	Dash	563498	male
So21	Front_Axle_Cmpt	564046	female	Sw30	Dash	563135	male
So22	Front_Axle_Cmpt	564046	female	Sw32	Dash	561477	female
So23	Rear_Axle_Cmpt	564046	female	Sw33	Dash	561476	male
So24	Rear_Axle_Cmpt	564046	female	Sw34	Outside_Front_RH	562477	male
So27	Rearaxlecmpt.	564045	female	Sw37	Dash	563498	male
So50	Rearaxlecmpt.	564046	female	Sw38	Dash	563498	male
So51	Rearaxlecmpt.	641385	male	Sw39.A	RJB	562403	female
So52	Rearaxlecmpt.	564045	female	Sw39.B	RJB	562403	female
So53	Rearaxlecmpt.	641385	male	Sw40	LH_Console	561690	male
So54	Enginecmpt.	564045	female	Sw41	LH_Console	562749	male
spBar4	Enginecmpt.	564135	male	Sw42	Lugg_Cmpt	561636	female
spBar5	Enginecmpt.	564135	male	Sw43	Lugg_Cmpt	563498	female
spBar6	Enginecmpt.	564135	male	Sw44.A	Lugg_Cmpt	562485	male
spBar7	Enginecmpt.	564135	male	Sw44.B	Lugg_Cmpt	562486	female
spBar11	Engine_Cmpt.	564135	male	Sw45.A	5th_Lugg_Cmpt	562485	male
spBar12	Engine_Cmpt.	564135	male	Sw45.B	5th_Lugg_Cmpt	562486	female

CONNECTORS LIST

No	Location	Part #	Gender	No	Location	Part #	Gender
Sw46.A	5th_Lugg_Cmpt	562485	male	VECF11	FJB	563184	male
Sw46.B	5th_Lugg_Cmpt	562486	female	VECF12	FJB	563187	male
Sw47.A	3rd_Lugg_Cmpt	562485	male	VECR1	RJB	563186	male
Sw47.B	3rd_Lugg_Cmpt	562486	female	VECR2	RJB	563183	male
Sw48.A	3rd_Lugg_Cmpt	562485	male	VECR3	RJB	563185	male
Sw48.B	3rd_Lugg_Cmpt	562486	female	VECR4	RJB	563182	male
Sw49.A	2nd_Lugg_Cmpt	562485	male	VECR9	RJB	563448	male
Sw49.B	2nd_Lugg_Cmpt	562486	female	VECR10	RJB	563181	male
Sw50.A	2nd_Lugg_Cmpt	562485	male	VECR11	RJB	563184	male
Sw50.B	2nd_Lugg_Cmpt	562486	female	VECR12	RJB	563187	male
Sw51.A	1st_Lugg_Cmpt	562485	male	VECT3	Rear_vehicule	563718	male
Sw51.B	1st_Lugg_Cmpt	562486	female	VECT4	Rear_vehicule	563714	male
Sw52.A	1st_Lugg_Cmpt	562485	male	Y80	Engine_Cmpt	563789	male
Sw52.B	1st_Lugg_Cmpt	562486	female	Y81	Cond_Cmpt	563793	male
Sw55.A	Lavatory	560488	female				
Sw55.B	Lavatory	560488	female				
Sw56.A	Lavatory	560488	female				
Sw56.B	Lavatory	560488	female				
Sw58	Engine_Cmpt.	563135	male				
Sw59	Enginecmpt.	563135	male				
Sw64	RJB	563498	male				
Sw82	RJB	563135	male				
Sw83	RJB	564699	male				
Sw85	LH_Console	562749	male				
Sw95.A	WCLdoor	562615	female				
Sw95.B	WCLdoor	562615	female				
Sw95.C	WCLdoor	562615	female				
Sw96.A	WCL_Door	562615	female				
Sw96.B	WCL_Door	562615	female				
Sw96.C	WCLdoor	562615	female				
Sw97.A	WCLsystem	562615	female				
Sw97.B	WCLsystem	562615	female				
Sw97.C	WCLsystem	562615	female				
Sw98.A	WCLsystem	562615	female				
Sw98.B	WCLsystem	562615	female				
Sw98.C	WCLsystem	562615	female				
Sw152	Driver_Area	562471	male				
VECF1	FJB	563186	male				
VECF2	FJB	563183	male				
VECF3	FJB	563185	male				
VECF4	FJB	563182	male				
VECF9	FJB	563448	male				
VECF10	FJB	563181	male				

CONNECTORS LIST

No	Location	Part #	Gender	No	Location	Part #	Gender
24SS_OP	Parcel_Rack_LH	563071	male	A34.L	Enginecmpt.	564269	male
24SS_OP	Parcel_Rack_LH	563040	female	A36.JA	Front	562767	male
24SS_OP_2	Parcel_Rack_LH	563071	male	A36.JB	Front	562765	male
24SS_OP_2	Parcel_Rack_LH	563040	female	A36.JC	Front	562957	male
A1	RJB	563975	male	A36A.JA	Front	564325	male
A2	FJB	563984	male	A36A.JB	Front	562767	male
A5	Service_Cmpt	562428	female	A39.P101	Parcel_Rack_LH	563201	male
A6	Engine_Cmpt	562427	male	A39.P901	Parcel_Rack_LH	563953	male
A7	Rear_Axle_Cmpt	563979	male	A50	P_Rack	563996	female
A8.A	Dash	564698	male	A60.A	P_Rack	563071	male
A9.Cx1	FJB	564041	female	A60.B	P_Rack	562706	female
A9.Cx2	FJB	563678	male	A60.C	P_Rack	901110	male
A9.Cx3	FJB	564037	female	A60.D	P_Rack	901110	male
A9.Cx4	FJB	564038	female	A60.E	P_Rack	560799	female
A10.X1	Engine_Cmpt	563135	male	A60.F	P_Rack	bidon	male
A10.X3	Engine_Cmpt	563134	female	A61.A	Parcel_Rack_LH	562464	male
A10.A1	Cmpt Wabaso	563207	male	A61.B	Parcel_Rack_LH	562465	male
A10.A2	Cmpt Wabaso	564161	male	A63	Roof	562090	male
A10.A3	Cmpt Wabaso	564798	male	A65.A	Parcel_Rack_LH	563025	male
A11	LH_Console	563142	male	A65.B4	Parcel_Rack_LH	bidon	male
A12.A	DriverArea	564699	male	A65.B5	Parcel_Rack_LH	bidon	male
A14.A	Dash	562765	male	A65.B6	Parcel_Rack_LH	bidon	male
A14.B	Dash	562764	male	A65.D	Parcel_Rack_LH	bidon	male
A14.C	Dash	562767	male	A65.E	Parcel_Rack_LH	563071	male
A14.D	Dash	562766	male	A65.G1	Parcel_Rack_LH	563071	male
A15	Dash	562464	male	A65.G2	Parcel_Rack_LH	563071	male
A19	LH_Console	562878	female	A65.G3	Parcel_Rack_LH	563071	male
A20	FrontRoof	562465	male	A65.H1	Parcel_Rack_LH	561716	female
A21.A	Dash	564038	female	A65.H2	Parcel_Rack_LH	561716	female
A21.B	Dash	564700	male	A65.H3	Parcel_Rack_LH	561716	female
A22	Dash	564004	male	A65.J	Parcel_Rack_LH	562465	male
A23	P_Rack	564004	male	A69L.A	Parcel_Rack_LH	563025	male
A24	P_Rack	564004	male	A69L.B1	Parcel_Rack_LH	bidon	male
A25	Parcel_Rack_LH	563025	male	A69L.B2	Parcel_Rack_LH	bidon	male
A26.P1	Enginecmpt.	562350	male	A69L.B3	Parcel_Rack_LH	bidon	male
A26.P2	Enginecmpt.	563322	female	A69L.B4	Parcel_Rack_LH	bidon	male
A26.P4	Enginecmpt.	568088	male	A69L.C	Parcel_Rack_LH	bidon	male
A27	Service_Cmpt	562929	male	A69R.A	Parcel_Rack_RH	563025	male
A28	Service_Cmpt	562928	male	A69R.B1	Parcel_Rack_RH	bidon	male
A29	FJB	564004	male	A69R.B2	Parcel_Rack_RH	bidon	male
A31	P_Rack	564004	male	A69R.B3	Parcel_Rack_RH	bidon	male
A34.J	Enginecmpt.	568118	male	A69R.B4	Parcel_Rack_RH	bidon	male
A34.K	Enginecmpt.	564270	male	A69R.C	Parcel_Rack_RH	bidon	male

CONNECTORS LIST

No	Location	Part #	Gender	No	Location	Part #	Gender
A70a.A	Parcel_Rack	561540	female	A121.B	Dash	bidon	male
A71	Dash	563884	male	A121.USB	Dash	563878	male
A77	Parcelrack	564547	male	A121.Vsa	Dashboard	563679	male
A78	Parcelrack	562583	female	A121.Vsb	Dashboard	563678	male
A79	Parcelrack	562583	female	A121.Vsc	Dashboard	564037	male
A80	Parcelrack	562479	female	A121.Vsd	Dashboard	564118	male
A81.CN1	FJB	562767	male	A122.A	Parcel_Rack_LH	563960	male
A81.CN3A	FJB	564741	male	A122.B	Parcel_Rack_LH	563962	male
A81.CN3B	FJB	564742	male	A122.C1	Parcel_Rack_LH	563956	male
A83.A	FJB	565970	male	A122.C2	Parcel_Rack_LH	563957	male
A95.A	P_Rack	564489	female	A122.C3	Parcel_Rack_LH	563958	male
A95.B	P_Rack	562706	female	A123.A	Parcel_Rack_LH	563960	male
A95.C	P_Rack	562706	female	A123.B	Parcel_Rack_LH	563962	male
A96.A	Front	563678	male	A123.C1	Parcel_Rack_LH	563956	male
A96.B	Front	562795	male	A123.C2	Parcel_Rack_LH	563957	male
A97A	Front	563226	male	A123.C3	Parcel_Rack_LH	563958	male
A97A	Front	563613	female	A124.A	Parcel_Rack_LH	563960	male
A97B	Front	563226	male	A124.B	Parcel_rack	563962	male
A97B	Front	563613	female	A124.C1	Parcel_rack	563956	male
A97S.A1	Front	564401	male	A124.C2	Parcel_rack	563957	male
A97S.A2	Front	564402	male	A124.C3	Parcel_rack	563958	male
A97S.A3	Front	564403	male	A127	Dashboard	562957	male
A99	Dash	564205	male	A128	Dash	563878	male
A100	FrontAxelAnt	563515	male	A129	Parcel_Rack_LH	563878	male
A101	FrontAxelAnt	563515	male	A130	Driver_Area	563226	male
A102	FrontAxelAnt	563515	male	A131.A	Engine_Cmpt	561782	male
A107	EngineCmpt.	560336	male	A131.B	Engine_Cmpt	561781	female
A108	RJB	562766	male	A137A	Condensercmpt.	20429843	male
A109A	FJB	564141	male	A138	Cond_Cmpt	563787	male
A111	Lavatory	562550	female	A150	Modesty_LH	562957	male
A114A	Bumper	564252	male	A150LH	Modesty_LH	562957	male
A116	Dash	563872	female	A150RH	Modesty_RH	562957	male
A120.A	Dash	563960	male	A152.A	Parcelrack	561550	male
A120.B	Dash	563962	male	A152.B	Parcelrack	563071	male
A120.C1	Dash	563956	male	A152.C	Parcelrack	563071	male
A120.C2	Dash	563957	male	A152.D	Parcelrack	563071	male
A120.C3	Dash	563958	male	A152.E	Parcelrack	563071	male
A120.USB_COM	Dash	563878	male	A152.F	Parcelrack	563071	male
A120A.J1	Dashboard	563525	male	A152.G	Parcelrack	563071	male
A120A.J2	Dashboard	563526	female	A152.H	Parcelrack	563071	male
A120A.J3	Dashboard	563527	female	A152.I	Parcelrack	563071	male
A120A.USB	Dash	563878	male	A152.J	Parcelrack	563071	male
A120A.USB_CON	Dash	563878	male	A152.K	Parcelrack	562779	male

CONNECTORS LIST

No	Location	Part #	Gender	No	Location	Part #	Gender
A152.L	Parcelrack	562779	male	AE48.J1	RH_console	563679	male
A162.A	Front_Roof	561690	male	AE48.J2	RH_console	564037	male
A162.B	Front_Roof	561782	male	AE48.J3	RH_console	565957	male
A164.A	Front_Roof	561690	male	AE49.J1	RJB	563679	male
A164.B	Front_Roof	561782	male	AE49.J2	RJB	564037	male
A166	Front_Roof	564366	female	AE49.J3	RJB	565957	male
A222M	LH_Mirror	562485	male	AE50.J1	RJB	563679	male
A223M	RH_Mirror	562485	male	AE50.J2	RJB	564037	male
A614.A	P_RACK	561550	male	AE50.J3	RJB	565957	male
A614.C1	P_RACK	563071	male	AE51.J1	RJB	563679	male
A614.C2	P_RACK	563071	male	AE51.J2	RJB	564037	male
A614.C3	P_RACK	563071	male	AE51.J3	RJB	565957	male
A614.C4	P_RACK	563071	male	AE52.J1	RJB	563679	male
A614.C5	P_RACK	563071	male	AE52.J2	RJB	564037	male
A614.C6	P_RACK	563071	male	AE52.J3	RJB	565957	male
A614.I/O	Parcel_Rack	bidon	male	AE53.J1	RJB	563679	male
A614.P1	Parcel_Rack	562783	male	AE53.J2	RJB	564037	male
A614.P2	Parcel_Rack	562783	male	AE53.J3	RJB	565957	male
A614.P3	Parcel_Rack	562783	male	AE54.J1	Evaporatorcmpt.	563679	male
AE41.J1	FJB	563679	male	AE54.J2	Evaporatorcmpt.	564037	male
AE41.J2	FJB	564037	male	AE54.J3	Evaporatorcmpt.	565957	male
AE41.J3	FJB	564004	male	AE55.J1	Dash	563679	male
AE42.J1	FJB	563679	male	AE55.J2	Dash	564037	male
AE42.J2	FJB	564037	male	AE55.J3	Dash	564004	male
AE42.J3	FJB	564004	male	AE56.J1	Dash	563679	male
AE43.J1	FJB	563679	male	AE56.J2	Dash	564037	male
AE43.J2	FJB	564037	male	AE56.J3	Dash	564004	male
AE43.J3	FJB	565957	male	AE57.J1	WCLcmpt.	563679	male
AE44.J1	FJB	563679	male	AE57.J2	WCLcmpt.	564037	male
AE44.J2	FJB	564037	male	AE57.J3	WCLcmpt.	564004	male
AE44.J3	FJB	565957	male	AE58.J1	P_Rack	563679	male
AE44_1_694.J1	Evaporatorcmpt.	563679	male	AE58.J2	P_Rack	564037	male
AE44_1_694.J2	Evaporatorcmpt.	564037	male	AE58.J3	P_Rack	565957	male
AE44_1_694.J3	Evaporatorcmpt.	565957	male	Alt_LL.B	Engine_Cmpt	564410	female
AE45.J1	FJB	563679	male	Alt_LLMux.B	Engine_Cmpt	564410	female
AE45.J2	FJB	564037	male	Alt_UR.B	Engine_Cmpt	564469	female
AE45.J3	FJB	565957	male	Alt_URMux.B	Engine_Cmpt	564469	female
AE46.J1	FJB	563679	male	AltLL.A	Enginecmpt.	563746	female
AE46.J2	FJB	564037	male	AltLL.B	Enginecmpt.	560815	female
AE46.J3	FJB	565957	male	AltLL.C	Enginecmpt.	564469	female
AE47.J1	RH_console	563679	male	AltLR.A	enginecmpt.	563746	female
AE47.J2	RH_console	564037	male	AltLR.B	Enginecmpt.	560815	female
AE47.J3	RH_console	565957	male	AltLR.C	Enginecmpt.	564469	female

CONNECTORS LIST

No	Location	Part #	Gender	No	Location	Part #	Gender
AltUR.A	Enginecmpt.	563746	female	C14	FJB	563581	female
AltUR.B	Enginecmpt.	560815	female	C15A	Evapotatorcmpt.	568110	male
AltUR.C	Enginecmpt.	564469	female	C15A	Evaporatotcmpt.	568109	female
B85	Engine_Cmpt	222222	male	C16	RJB	561577	male
B96	Engine_Cmpt	111111	female	C16	RJB	561605	female
B96B	Engine_Cmpt	563815	male	C17	RJB	560195	male
B97	Engine_Cmpt	563821	male	C17	RJB	560169	female
B98	Engine_Cmpt	563823	male	C18	FJB	561986	male
B99	Engine_Cmpt	563816	male	C18	FJB	561987	female
B115A	Enginecmpt.	563817	male	C19	RJB	561986	male
B142C	Urea_Cmpt	563815	male	C19	RJB	561987	female
B310	Enginecmpt.	564226	male	C20A	Evap_Cmpt	562485	male
C1	FJB	563589	male	C20A	Evap_Cmpt	562486	female
C1	FJB	563590	female	C20B	Evap_Cmpt	562485	male
C1S	FJB	563589	male	C20B	Evap_Cmpt	562486	female
C1S	FJB	563590	female	C22	FJB	561986	male
C2	Service_Cmpt	563580	male	C22	FJB	561987	female
C2	Service_Cmpt	563581	female	C23	Evaporatorcmpt.	564034	male
C2A	FJB	563580	male	C23	Evaporatorcmpt.	564035	female
C2A	FJB	563581	female	C24_plug	Evap_Cmpt	561690	male
C2B	FJB	563580	male	C24_socket	Evap_Cmpt	561566	female
C2B	FJB	563581	female	C25	P_Rack	561734	male
C3_plug	RJB	563589	male	C25	P_Rack	561735	female
C3_socket	RJB	563590	female	C25A	P_Rack	561734	male
C3AP	FJB	563589	male	C25A	P_Rack	561735	female
C3AP	FJB	563590	female	C26	Ureacmpt.	563226	male
C3AS	FJB	563589	male	C26	Ureacmpt.	563613	female
C3AS	FJB	563590	female	C26A	Ureacmpt.	568110	male
C3S	RJB	563593	male	C26A	Ureacmpt.	568109	female
C3S	RJB	563590	female	C26B	Ureacmpt.	563227	male
C4	FJB	563580	male	C26B	Ureacmpt.	563614	female
C4	FJB	563581	female	C27	Front	563618	male
C5	FJB	563589	male	C27	Front	563616	female
C5	FJB	563590	female	C28	Dash	561986	male
C8	FJB	568112	male	C28	Dash	561987	female
C8	FJB	568111	female	C29	4rd_Lugg_Cmpt	563651	male
C9	RJB	561986	male	C29	3rd_Lugg_Cmpt	563652	female
C9	RJB	561987	female	C30	3rd_Lugg_Cmpt	561710	male
C10	Engine_Cmpt	562581	male	C30	3rd_Lugg_Cmpt	561709	female
C10	Engine_Cmpt	562583	female	C31W	Lugg_Cmpt	563227	male
C12	Engine_Cmpt	562581	male	C31W	Lugg_Cmpt	563614	female
C12	Engine_Cmpt	562583	female	C32	Lavatory	561734	male
C14	FJB	563580	male	C32	Lavtory	561735	female

CONNECTORS LIST

No	Location	Part #	Gender	No	Location	Part #	Gender
C32W	Lugg_Cmpt	561734	male	C54A	Ureacmpt.	568109	female
C32W	Lugg_Cmpt	561735	female	C54B	Engine_Cmpt.	562477	male
C33	WCLcmpt.	564034	male	C54B	Engine_Cmpt.	562479	female
C33	WCLcmpt.	564035	female	C55	Evap_Cmpt	561577	male
C34	Dash	561986	male	C55	Evap_Cmpt	561605	female
C34	Dash	561987	female	C56	Front	562581	male
C35	Dash	561986	male	C56	Front	562583	female
C35	Dash	561987	female	C59	RJB	561643	male
C36	FJB	561986	male	C59	RJB	561642	female
C36	FJB	561987	female	C61	Door	563347	male
C37	P_Rack	561986	male	C61	Door	563180	female
C37	P_Rack	561987	female	C63	Entrace_Door	562581	male
C38	P_Rack	561986	male	C63	Entrace_Door	562583	female
C38	P_Rack	561987	female	C64	Enginecmpt.	568110	male
C38A	P_Rack	561515	male	C64	Enginecmpt.	568109	female
C38A	P_Rack	561552	female	C64X	WCL_Door	560898	male
C39	Parcelrack	562503	male	C64X	WCL_Door	560900	female
C39	Parcelrack	562507	female	C66_plug	Evap_Cmpt	561577	male
C39A	Firesuppressioncmpt.	561782	male	C66_socket	Evap_Cmpt	561605	female
C39A	Firesuppressioncmpt.	561781	female	C68	FJB	561643	male
C40W	P_Rack	561515	male	C68	FJB	561642	female
C40W	P_Rack	561552	female	C71	FJB	561646	male
C41	RJB	561782	male	C71	FJB	561644	female
C41	RJB	561781	female	C72	FJB	561646	male
C42	Front	562285	male	C72	FJB	561644	female
C42	Front	562282	female	C74	FJB	561713	male
C43	Front	562581	male	C74	FJB	561714	female
C43	Front	562583	female	C77	P_Rack	561986	male
C44_plug	FJB	561577	male	C77	P_Rack	561987	female
C44_socket	FJB	561605	female	C80	WCL	564740	male
C45	Front	561646	male	C81	WCL	564740	male
C45	Front	561645	female	C82	P_Rack	561247	male
C46	3rdlugg.cmpt.	562549	male	C82	P_Rack	561248	female
C46	3rdlugg.cmpt.	562550	female	C83	P_Rack	561247	male
C47	FJB	565207	male	C83	P_Rack	561248	female
C48	RJB	565208	male	C87	Engine_Cmpt	562485	male
C49	FJB	562005	male	C87	Engine_Cmpt	562486	female
C49	FJB	561714	female	C88	WCL_Cmpt.	563226	male
C50	RJB	563933	male	C88	WCL_Cmpt.	563613	female
C50	RJB	563932	female	C90	RJB	563582	male
C54	Engine_Cmpt.	563226	male	C90	RJB	563583	female
C54	Engine_Cmpt.	563613	female	C91	RJB	562285	male
C54A	Ureacmpt.	568110	male	C91	RJB	562282	female

CONNECTORS LIST

No	Location	Part #	Gender	No	Location	Part #	Gender
C94	FJB	563589	male	C162	Front_Clearance	561690	male
C94	FJB	563590	female	C162	Front_Clearance	561566	female
C99	Enginecmpt.	562581	male	C164A	P_Rack	561690	male
C99	Enginecmpt.	562583	female	C164A	P_Rack	561566	female
C100	Evaporatorcmpt.	562477	male	C167	Parcel_Rack_LH	561577	male
C100	Evaporatorcmpt.	562479	female	C167	Parcel_Rack_LH	561605	female
C100S	Evaporator_Cmpt.	562477	male	C173	Modesty_LH	563071	male
C100S	Evaporator_Cmpt.	562479	female	C173	Modesty_LH	563040	female
C107A	Enginecmpt.	562885	female	C175	RJB	563226	male
C107A	Enginecmpt.	562884	female	C175	RJB	563613	female
C107B	Enginecmpt.	562885	female	C193_plug	RJB	563589	male
C107B	Enginecmpt.	562884	female	C193_socket	RJB	563590	female
C107C	Enginecmpt.	562885	female	C194	FJB	563589	male
C107C	Enginecmpt.	562884	female	C194	FJB	563590	female
C110	Dash	568110	male	C195	Dash	563347	male
C110	Dash	568109	female	C195	Dash	560489	female
C111	Pneumatic_Plate	564547	male	C222	FJB	562477	male
C111	Pneumatic_Plate	564562	female	C222	FJB	562479	female
C119A	Rear_engine_door	568110	male	C226	Front	562650	male
C119A	Rear_engine_door	568109	female	C226	Front	562649	female
C124	Front_Roof	562503	male	C228	Engine_Cmpt	562477	male
C124	Front_Roof	562507	female	C228	Engine_Cmpt	562479	female
C129	Dashboard	562464	male	C279	Service_Cmpt	562477	male
C129	Dashboard	565871	female	C279	Service_Cmpt	562479	female
C130	Dash	562581	male	C284	Parcel_Rack	561247	male
C130	Dash	562583	female	C284	Parcel_Rack	561248	female
C131A	Engine_Cmpt	561782	male	C298	Parcel_Rack	561611	male
C131A	Engine_Cmpt	561781	female	C298	Parcel_Rack	561610	female
C131B	Engine_Cmpt	561782	male	C355	RJB	563582	male
C131B	Engine_Cmpt	561781	female	C355	RJB	565887	female
C144	FJB	562006	male	C355A	RJB	563582	male
C144	FJB	560908	female	C355A	RJB	565887	female
C150	Modesty_LH	562957	male	C356	P_Rack	561646	male
C150	Modesty_LH	564406	female	C356	P_Rack	561644	female
C152	Cond_Cmpt	561611	male	C356A	P_Rack	561773	male
C152	Cond_Cmpt	561610	female	C356A	P_Rack	561772	female
C157_p	Parcel_Rack	561637	male	C357	P_Rack	561695	male
C157_s	Parcel_Rack	561636	female	C357	P_Rack	561694	female
C159	Parcel_Rack	561577	male	C380A	Dash	564222	female
C159	Parcel_Rack	561605	female	C380A	Dash	564224	male
C159_L	Parcel_Rack	561247	male	C381	Parcel_Rack	561847	male
C159_L	Parcel_Rack	561248	female	C381	P_Rack	561924	female

CONNECTORS LIST

No	Location	Part #	Gender	No	Location	Part #	Gender
C382	Under_Seat	561580	male	C_Audio	Parcel_Rack	901283	female
C382	Under_Seat	561582	female	C_Audio	Parcel_Rack	901062	male
C397	RJB	562285	male	C_Audio	Parcel_Rack	901283	female
C397	RJB	562282	female	C_AUX	Parcelrack	563071	male
C400	P_Rack	561646	male	C_AUX	Parcelrack	563040	female
C400	P_Rack	561644	female	C_LineO	Parcelrack	563962	male
C463	Rearaxlecmpt.	568111	female	C_LineO	Parcelrack	564489	female
C463	Rearaxlecmpt.	568112	male	C_Mo9	Evap_Cmpt	561577	male
C464	FJB	564222	female	C_Mo9	Evap_Cmpt	561605	female
C464	FJB	564224	male	CCAN1	FJB	562650	male
C464A	Dash	564222	female	CCAN1	FJB	562649	female
C464A	Dash	564224	male	CCAN2	FJB	562650	male
C464B	FJB	564222	female	CCAN2	FJB	562649	female
C464B	FJB	564224	male	CCAN3	FJB	562650	male
C465	Parcelrack	562581	male	CCAN3	FJB	562649	female
C465	Parcelrack	562583	female	CCAN4	FJB	562650	male
C542	Parcelrack	561550	male	CCAN4	FJB	562649	female
C542	Parcelrack	561667	female	CCust	RJB	562477	male
C543	LH_Parcel_Rack	561607	male	CCust	RJB	562479	female
C543	LH_Parcel_Rack	561606	female	CFHPR1	Parcelrack	564560	male
C564	Parcelrack	562503	male	CP1	Passenger_Area	561782	male
C564	Parcelrack	562507	female	CP1	Passenger_Area	561781	female
C566	Parcelrack	562503	male	CP2	Passenger_Area	561782	male
C566	Parcelrack	562507	female	CP2	Passenger_Area	561781	female
C567	Parcelrack	562503	male	CP3	Passengersarea	561782	male
C567	Parcelrack	562507	female	CP3	Passengersarea	561781	female
C614	Passenger_Area	563071	male	CP4	Passenger_Area	561782	male
C614	Passenger_Area	563040	female	CP4	Passenger_Area	561781	female
C615	Passenger_Area	563071	male	CP5	Passenger_Area	561782	male
C615	Passenger_Area	563040	female	CP5	Passenger_Area	561781	female
C768	Parcel_Rack	901062	male	CSX1	Engine_Cmpt	563135	male
C768	Parcel_Rack	901283	female	CSX1	Engine_Cmpt	563134	female
C769	Parcel_Rack	901062	male	CSX3	Engine_Cmpt	563135	male
C769	Parcel_Rack	901283	female	CSX3	Engine_Cmpt	563134	female
C777	Dashboard	562581	male	CT_IN	Rear_Vehicle	560167	male
C777	Dashboard	562583	female	CT_IN	Rear_Vehicle	560159	female
C_A69R	Parcel_Rack	563025	male	CT_Out	Rear_Vehicle	560233	female
C_ALT1	Engine_Cmpt	563226	male	EI	Enginecmpt.	563739	male
C_ALT1	Engine_Cmpt	563613	female	L1A	Enginecmpt.	560774	male
C_ALT2	Engine_Cmpt	563618	male	L16.A	Frontroof	562615	female
C_ALT2	Engine_Cmpt	563616	female	L16.B	Frontroof	562615	female
C_Audio_HDMI_	Parcel_Rack	901062	male	L17.A	Frontroof	562615	female

CONNECTORS LIST

No	Location	Part #	Gender	No	Location	Part #	Gender
L17.B	Frontroof	562615	female	L81.B	Rear_Vehicle	562834	male
L18	Entrance_Door	563590	female	L82A	Rearvehicule	562348	female
L21	Upper_front	560605	female	L83A	Rearvehicule	562348	female
L22	Upper_front	560605	female	L84	Rear_roof	560605	female
L23	Upper_front	560605	female	L85	Rear_roof	560605	female
L24	Upper_front	560605	female	L86	Rear_roof	560605	female
L25	Upper_front	560605	female	L87	Rear_roof	560605	female
L26	Upper_front	560605	female	L88	Rear_roof	560605	female
L27	Upper_front	560605	female	L89	Rear_roof	560605	female
L52	Parcelrack	560898	male	L90	Rear_roof	560605	female
L52	Parcelrack	560900	female	L93.B	Engine_Cmpt.	563069	female
L52A	Parcelrack	560898	male	L94.B	Engine_Cmpt.	563069	female
L53	Parcelrack	560898	male	L95	Outside_Front_LH	562485	male
L53	Parcelrack	560900	female	L96	Outside_Front_RH	562485	male
L53A	Parcelrack	560898	male	L140	Lavatory	561247	male
L54	Parcelrack	560898	male	L142	Lavatory	562006	male
L54	Parcelrack	560900	female	L172RH	Modesty_RH	564719	male
L54A	Parcelrack	560898	male	L173	Parcelrack	563590	female
L55	Parcelrack	560898	male	L174A	Parcelrack	563590	female
L55	Parcelrack	560900	female	L175	Engine_Cmpt.	563590	female
L55A	Parcelrack	560898	male	L176	5th_Lugg_Cmpt	561247	male
L56	Parcelrack	560898	male	L177	5th_Lugg_Cmpt	561247	male
L56	Parcelrack	560900	female	L178	3rd_Lugg_Cmpt	561247	male
L56A	Parcelrack	560898	male	L179	3rd_Lugg_Cmpt	561247	male
L57	Parcelrack	560898	male	L180	2nd_Lugg_Cmpt	561247	male
L57	Parcelrack	560900	female	L181	2nd_Lugg_Cmpt	561247	male
L57A	Parcelrack	560898	male	L182	1st_Lugg_Cmpt	561247	male
L58	Parcelrack	560898	male	L183	1st_Lugg_Cmpt	561247	male
L58	Parcelrack	560900	female	L184	Servicecmpt.	561247	male
L58A	Parcelrack	560898	male	L185.A	Servicecmpt.	561539	male
L63	Front_Side_LH	562155	male	L185.B	Servicecmpt.	561539	male
L64	Outside_Front_RH	562155	male	L186.A	Dash	561539	male
L65	Outside_Front_LH	562155	male	L186.B	Dash	561539	male
L66	Out_Side_Front_LH	562155	male	L187	Engine_Cmpt	561690	male
L67	4th_Lugg_Cmpt	562155	male	L188	Service_Cmpt	562486	female
L68	4th_Lugg_Cmpt	562155	male	L199	Enginecmpt.	562848	male
L69	4th_Lugg_Cmpt	562155	male	L204	Parcel_Rack_RH	562803	male
L70	4th_Lugg_Cmpt	562155	male	L205	Enginecmpt.	562485	male
L72	Rear_Vehicle	562155	male	L206	Parcel_Rack_RH	562803	male
L74	Rear_Vehicle	562155	male	L208	Outside_Front_LH	564733	female
L75	Rearenginedoor	562155	male	L209	Outside_Front_RH	564733	female
L76	Rear_engine_door	562155	male	L282	Engine_Cmpt	561690	male
L81.A	Rear_Vehicle	562835	female	L285.A	Rear_Vehicle	562835	female

CONNECTORS LIST

No	Location	Part #	Gender	No	Location	Part #	Gender
L285.B	Rear_Vehicle	562834	male	R21	FJB	560525	male
L286.A	Rear_Vehicle	562835	female	R26	Evap_Cmpt	564496	male
L286.B	Rear_Vehicle	562834	male	R29	RJB	563409	male
L290	Engine_door	562565	female	R30	FJB	564496	male
L291	Engine_door	562565	female	R31	FJB	564496	male
L298A	Enginecmpt.	563590	female	R34	RJB	564210	male
L306	RJBcmpt.	561247	male	R36	Dash	564496	male
L319	Under_WCL_platform	561247	male	R37	Dash	564496	male
L350A.A	Rearaxlecmpt.	564552	male	R38	FJB	564496	male
L350A.B	Rearaxlecmpt.	563340	male	R40	RJB	564496	male
Mic_Driv	Parcel_rack	560999	male	R45.B	RJB	562291	female
Mic_Driv	Parcel_rack	560999	male	R45.D	RJB	562651	female
Mic_Gui	Parcel_rack	560999	male	R47	Parcelrack	564496	male
Mic_Gui	Parcel_rack	560999	male	R_12VISS	Parcel_rack	564496	male
Mo12	Engine_Cmpt	561690	male	Res1	Front	563590	female
Mo13	Engine_Cmpt	561690	male	Res3.A	RJB	563590	female
Mo14	Engine_Cmpt	561566	female	Res4	FJB	563590	female
Mo15	Front_Ceiling	563517	female	Res6	FJB	563590	female
Mo16	Front_Ceiling	563517	female	Res6A	FJB	563589	male
Mo17	RH_Console	562350	male	Res6A	FJB	563590	female
Mo65	Enginecmpt.	568089	male	Res6B	FJB	563589	male
Mo67	Enginecmpt.	568089	male	Res6B	FJB	563590	female
Mo68	Enginecmpt.	568089	male	Res15	Engine_Cmpt	561782	male
Mo69	Enginecmpt.	568089	male	Res31	Ureacmpt.	562350	male
Mo70	Enginecmpt.	568089	male	Res32	Ureacmpt.	563764	female
Mo71	Enginecmpt.	568089	male	Res44	FJB	563590	female
Mo72	Enginecmpt.	568089	male	Se14.A	Driver_Area	561782	male
Mo73	Enginecmpt.	568089	male	Se14.B	Driver_Area	561781	female
PC1	FJB	562650	male	Se19_P	Service_Cmpt	563677	male
PC1	FJB	562649	female	Se19_S	Service_Cmpt	563677	male
PF	FJB	561782	male	Se23	Engine_Cmpt	563159	female
PF	FJB	561781	female	Se24	Evap_Cmpt	563758	female
PF1	Passenger_Area	561782	male	Se25	Passenger_Area	561248	female
PF1	Passenger_Area	561781	female	Se28	Pneumatic_plate	561690	male
PR	Parcelrack	561782	male	Se29	Engine_Cmpt	561566	female
PR	Parcelrack	561781	female	Se30	Enginedoor	562877	female
PR1	Passenger_Area	561782	male	Se31	Enginedoor	562877	female
PR1	Passenger_Area	561781	female	Se32	Rear_Axle_Cmpt	562426	male
R3	RJB	563409	male	Se33	Rear_Axle_Cmpt	562856	male
R4	FJB	564496	male	Se35	Rear_Axle_Cmpt	562426	male
R12	Evap_Cmpt	563409	male	Se36	Rear_Axle_Cmpt	562427	male
R16	RJB	564496	male	Se37	Front_Axle_LH	641132	female
R20	RJB	564496	male	Se38	Front_Axle_RH	641132	female

CONNECTORS LIST

No	Location	Part #	Gender	No	Location	Part #	Gender
Se39	Rear_Axle_LH	641132	female	spBar2	Condensorcmpt.	564135	male
Se40	Rear_Axle_LH	641132	female	spBar2	Condensorcmpt.	564135	male
Se41	Condensor_cmpt.	562877	female	spBar2	Enginecmpt.	564135	male
Se46	Rearaxlecmpt.	562348	female	spBar2	Enginecmpt.	564135	male
Se63	Rearaxlecmpt.	641132	female	spBar2	Enginecmpt.	564135	male
Se64	Rearaxlecmpt.	641132	female	Sub1.A	Passenger_Area	564004	female
Se65	Dash	564042	female	Sub2.A	Passenger_Area	564004	female
Se66	FJB	564039	female	Sw30	RJB	563135	male
Se67	Frontaxlecmpt.	563159	female	Sw32	Dash	561477	female
Se69	Frontaxlecmpt.	563159	female	Sw33	Dash	561476	male
Se74	Rear_Axle_Cmpt	563340	male	Sw34	Outside_Front_RH	562477	male
Se79	Front_Axle	563340	male	Sw39.A	RJB	562403	female
Se100	WCLdoor	562479	female	Sw39.B	RJB	562403	female
So7	Service_Cmpt	561690	male	Sw40	LH_Console	561690	male
So8	Servicecmpt.	641385	male	Sw41	LH_Console	562749	male
So9	Enginecmpt.	560016	female	Sw42	Lugg_Cmpt	561636	female
So10	Cond_Cmpt	562485	male	Sw45.A	5th_Lugg_Cmpt	562485	male
So11	Cond_Cmpt	561566	female	Sw45.B	5th_Lugg_Cmpt	562486	female
So13	Evap_Cmpt	563204	female	Sw46.A	5th_Lugg_Cmpt	562485	male
So14	Servicecmpt.	641385	male	Sw46.B	5th_Lugg_Cmpt	562486	female
So15	Servicecmpt.	641385	male	Sw47.A	3rd_Lugg_Cmpt	562485	male
So16	Servicecmpt.	641385	male	Sw47.B	3rd_Lugg_Cmpt	562486	female
So17	Servicecmpt.	562848	male	Sw48.A	3rd_Lugg_Cmpt	562485	male
So20	Servicecmpt.	641385	male	Sw48.B	3rd_Lugg_Cmpt	562486	female
So21	Front_Axle_Cmpt	564046	female	Sw49.A	2nd_Lugg_Cmpt	562485	male
So22	Front_Axle_Cmpt	564046	female	Sw49.B	2nd_Lugg_Cmpt	562486	female
So23	Rear_Axle_Cmpt	564046	female	Sw50.A	2nd_Lugg_Cmpt	562485	male
So24	Rear_Axle_Cmpt	564046	female	Sw50.B	2nd_Lugg_Cmpt	562486	female
So27	Rearaxlecmpt.	564045	female	Sw51.A	1st_Lugg_Cmpt	562485	male
So50	Rearaxlecmpt.	564046	female	Sw51.B	1st_Lugg_Cmpt	562486	female
So52	Rearaxlecmpt.	564045	female	Sw52.A	1st_Lugg_Cmpt	562485	male
So54	Enginecmpt.	564045	female	Sw52.B	1st_Lugg_Cmpt	562486	female
spBar4	Enginecmpt.	564135	male	Sw55.A	Lavatory	560488	female
spBar5	Enginecmpt.	564135	male	Sw55.B	Lavatory	560488	female
spBar6	Enginecmpt.	564135	male	Sw56.A	Lavatory	560488	female
spBar7	Enginecmpt.	564135	male	Sw56.B	Lavatory	560488	female
spBar11	Engine_Cmpt.	564135	male	Sw58	Engine_Cmpt.	563135	male
spBar12	Engine_Cmpt.	564135	male	Sw59	Enginecmpt.	563135	male
spBar13	Enginecmpt.	564135	male	Sw82	RJB	563135	male
spBar14	Enginecmpt.	564135	male	Sw83		564699	male
spBar15	Enginecmpt.	564135	male	Sw85	LH_Console	562749	male
spBar16	Enginecmpt.	564135	male	Sw95.A	WCLdoor	562615	female
spBar19	Condensorcmpt.	564135	male	Sw95.B	WCLdoor	562615	female

CONNECTORS LIST

No	Location	Part #	Gender	No	Location	Part #	Gender
Sw95.C	WCLdoor	562615	female	Term3	RJBChassisGndStud	560105	N/A
Sw96.A	WCL_Door	562615	female	Term4	RJB(RelayR3)	563538	N/A
Sw96.B	WCL_Door	562615	female	Term5	RJBBreakersPanel	563538	N/A
Sw96.C	WCLdoor	562615	female	Term7	RJB	563538	N/A
Sw97.A	WCLsystem	562615	female	Term12VD4	RJBMasterRelay	561964	N/A
Sw97.B	WCLsystem	562615	female	Term20	RJB(RelayR3)	563538	N/A
Sw97.C	WCLsystem	562615	female	Term28	Evap_Cmpt	560587	N/A
Sw98.A	WCLsystem	562615	female	Term36	FJBGndStud	560895	N/A
Sw98.B	WCLsystem	562615	female	Term37	FJBGndStud	560894	N/A
Sw98.C	WCLsystem	562615	female	Term43	FJBGndStud	563662	N/A
Sw152	Driver_Area	562471	male	Term46	Evap_Cmpt	560108	N/A
TBat1	RJB	563538	N/A	Term47	RJB	561560	N/A
TBat3	RJB	563538	N/A	Term50	RJB	561626	N/A
TBat5	RJB	563538	N/A	Term54	RJB	562880	N/A
TBat13	RJB	560111	N/A	Term59	EvapCmpt.ChassisGndStud	560105	N/A
TBat15	RJB	563329	N/A	Term64	Evap_Cmpt	560108	N/A
TBat24	RJB	560895	N/A	Term75	Engine_Cmpt	564115	N/A
TBat25	RJBMasterRelay	562880	N/A	term76	Engine_Cmpt	565165	N/A
TBat35	RJB	560083	N/A	Term103-A	Engine_Cmpt	568125	N/A
TBat36	RJB	560083	N/A	Term103-B	Engine_Cmpt	564026	N/A
TBat39	RJB	562880	N/A	Term106	RJB	565166	N/A
TBat40	RJB	560895	N/A	Term107	EvapCmpt.ChassisGndStud	564203	N/A
Term0A	FJBGndStud	560083	N/A	Term116	Engine_Cmpt	563538	N/A
Term00A	FJB	560093	N/A	Term117	Engine_Cmpt	563538	N/A
Term0EV1	EvapCmpt.ChassisGndStud	561560	N/A	Term126	RJB(RelayR3)	563538	N/A
Term0EV2	EvapCmpt.ChassisGndStud	560083	N/A	Term127	RJB(RelayR3)	561789	N/A
Term0F	FJBGndStud	561246	N/A	Term130	RJB	560894	N/A
Term00F	RJB	560086	N/A	Term131	FJBGndStud	561696	N/A
Term00F1	FJB	560086	N/A	Term132	FJBGndStud	560895	N/A
Term0F2	FJBGndStud	560083	N/A	Term135	Engine_Cmpt	564280	N/A
Term00F2	FJB	563354	N/A	Term141	Engine_Cmpt	565166	N/A
Term00F3	FJB	560086	N/A	Term145	Fr_LH_P_Rack	563623	N/A
Term00F4	RJB	560086	N/A	Term149	UreaCmpt.	561964	N/A
Term0FH	FJBGndStud	560083	N/A	Term149A	UreaCmpt.	561964	N/A
Term00FH3	FJB	561246	N/A	Term151	RJBBreakersPanel	563537	N/A
Term00FH4	FJB	561246	N/A	Term153A	RJBBreakersPanel	563537	N/A
Term0R1	RJBChassisGndStud	560083	N/A	Term154A	EvapCmpt.ChassisGndStud	560105	N/A
Term00R1	RJB	560086	N/A	Term154H	Parcel_Rack_LH	560587	N/A
Term00R2	RJB	560103	N/A	Term155H	Parcel_Rack_LH	560587	N/A
Term00R3	RJB	560086	N/A	Term159	Fr_L_P_Rack	565199	N/A
Term00R4	RJB	563354	N/A	Term160	Fr_L_P_Rack	565201	N/A
Term00R5	RJB	563354	N/A	Term161	Fr_L_P_Rack	565199	N/A
Term2	FJBGndStud	560083	N/A	Term163A	Fr_L_P_Rack	560094	N/A

CONNECTORS LIST

No	Location	Part #	Gender	No	Location	Part #	Gender
Term163B	Fr_L_P_Rack	560094	N/A	Term_CB6	RJB	564024	N/A
Term163C	Fr_L_P_Rack	560094	N/A	Term_CB6A	RJBBreakersPanel	561560	N/A
Term164A	Fr_L_P_Rack	560094	N/A	Term_CB8	RJBBreakersPanel	564027	N/A
Term164B	Fr_L_P_Rack	560094	N/A	Term_CB9A	RJB	561246	N/A
Term164C	Fr_L_P_Rack	560094	N/A	Term_CB10	RJBBreakersPanel	564026	N/A
Term165A	Fr_L_P_Rack	560094	N/A	Term_CB11	RJBBreakersPanel	561560	N/A
Term165B	Fr_L_P_Rack	560094	N/A	Term_CB12	RJBBreakersPanel	560105	N/A
Term165C	Fr_L_P_Rack	560094	N/A	Term_CB13	RJBBreakersPanel	560105	N/A
Term169A	Fr_L_P_Rack	560094	N/A	Term_Evap	Evap_Cmpt	560108	N/A
Term169B	Fr_L_P_Rack	560094	N/A	Term_Evap	Evap_Cmpt	561788	N/A
Term169C	Fr_L_P_Rack	560094	N/A	Term_FJB_(	FJB	561966	N/A
Term170A	Fr_L_P_Rack	560094	N/A	Term_Inv_2	RJBBreakersPanel	563537	N/A
Term170B	Fr_L_P_Rack	560094	N/A	Term_Inv_(	RJBBreakersPanel	563537	N/A
Term170C	Fr_L_P_Rack	560094	N/A	Term_R_M(	RJBBreakersPanel	560104	N/A
Term180	Engine_Cmpt	560894	N/A	Term_R_M(	Engine_Cmpt	560103	N/A
Term200	Engine_Cmpt	560027	N/A	Term_RJB_(	RJBMasterRelay	563536	N/A
Term201	FJBGndStud	564116	N/A	Term_RJB_(	RJB	561966	N/A
Term210	Engine_Cmpt	560840	N/A	Term_VECF	FJB	564028	N/A
Term211	Engine_Cmpt	560826	N/A	Term_VECF	FJB	564023	N/A
Term212	Engine_Cmpt	565165	N/A	Term_VECF	FJB	564027	N/A
Term213	Engine_Cmpt	561458	N/A	Term_VECR	RJB	564025	N/A
Term230	RJB	560895	N/A	Term_VECR	RJB	564024	N/A
Term610	RJBChassisGndStud	561964	N/A	Term_VECR	RJB	564025	N/A
Term611	RJBChassisGndStud	561818	N/A	TermA26P2	RJBBreakersPanel	562405	N/A
Term640	Fr_L_P_Rack	560094	N/A	TermAFSS	Luggage_Cmpt	560083	N/A
Term641	Fr_L_P_Rack	560094	N/A	TermF26	FJB	562101	N/A
Term642	Fr_L_P_Rack	560094	N/A	TermGnd	Evap_Cmpt	561964	N/A
Term643	Fr_L_P_Rack	560094	N/A	TermGnd1	Rr_Seat	561626	N/A
Term644	Fr_L_P_Rack	560094	N/A	TermL74	Fr_LH_P_Rack	563623	N/A
Term645	Fr_L_P_Rack	560094	N/A	TermNeg	Engine_Cmpt	560086	N/A
Term_12V_E	RJB	560926	N/A	TermPos	Engine_Cmpt	560086	N/A
Term_AE48J1	Fr_LH_P_Rack	562806	N/A	TermR5	Fr_LH_P_Rack	563623	N/A
Term_AE48J1	Fr_LH_P_Rack	562806	N/A	TermR12	Evap_Cmpt	560096	N/A
Term_AE48J1	Fr_LH_P_Rack	562806	N/A	TermR12-3	Evap_Cmpt	561788	N/A
Term_AE55J1	Fr_LH_P_Rack	562806	N/A	TermR12-5	Evap_Cmpt	561788	N/A
Term_AE55J1	Fr_LH_P_Rack	562806	N/A	TermR21-A	FJB	560076	N/A
Term_c600.2	Fr_LH_P_Rack	562286	N/A	TermR21-B	FJB	560076	N/A
Term_c600.3	Fr_LH_P_Rack	562286	N/A	TermR210.A	Parcelrack	560076	N/A
Term_CB1	RJBBreakersPanel	564025	N/A	TermR210.E	Parcelrack	560076	N/A
Term_CB2	RJB	564024	N/A	TermRad1	FJBGndStud	561955	N/A
Term_CB2A	RJBBreakersPanel	561560	N/A	TermRad2	FJBGndStud	561955	N/A
Term_CB3	RJBBreakersPanel	564025	N/A	TermRHC1	FJB	561560	N/A
Term_CB5	RJBBreakersPanel	564025	N/A	TermRHC2	FJB	563354	N/A

CONNECTORS LIST

No	Location	Part #	Gender	No	Location	Part #	Gender
TermRHC3	FJB	560926	N/A				
TermStart1	Engine_Cmpt	564573	N/A				
TermStart2	Engine_Cmpt	560103	N/A				
TGND_TR	RJBChassisGndStud	560083	N/A				
TGNDR4	RJB	564978	N/A				
TGNDR12	RJB	561789	N/A				
VECF1	FJB	563186	male				
VECF2	FJB	563183	male				
VECF3	FJB	563185	male				
VECF4	FJB	563182	male				
VECF9	FJB	563448	male				
VECF10	FJB	563181	male				
VECF11	FJB	563184	male				
VECF12	FJB	563187	male				
VECR1	RJB	563186	male				
VECR2	RJB	563183	male				
VECR3	RJB	563185	male				
VECR4	RJB	563182	male				
VECR9	RJB	563448	male				
VECR10	RJB	563181	male				
VECR11	RJB	563184	male				
VECR12	RJB	563187	male				
VECT3	Rear_vehicule	563718	male				
VECT4	Rear_vehicule	563714	male				
Y80	Engine_Cmpt	563789	male				
Y81	Cond_Cmpt	563793	male				

CONNECTORS LIST

No	Location	Part #	Gender	No	Location	Part #	Gender
24SS_OP	Parcel_Rack_LH	563071	male	A39.P901	Parcel_Rack_LH	563953	male
24SS_OP	Parcel_Rack_LH	563040	female	A40.A		561668	male
24SS_OP_2	Parcel_Rack_LH	563071	male	A60.A	P_Rack	563071	male
24SS_OP_2	Parcel_Rack_LH	563040	female	A60.B	P_Rack	562706	female
A1	RJB	563975	male	A60.C	P_Rack	901110	male
A2A	LHConsole	563984	male	A60.D	P_Rack	901110	male
A5A	Service_Cmpt	562428	female	A60.E	P_Rack	560799	female
A6	Engine_Cmpt	562427	male	A60.F	P_Rack	bidon	male
A7	Rear_Axle_Cmpt	563979	male	A61.A	Parcel_Rack_LH	562464	male
A9.Cx1	FJB	564041	female	A61.B	Parcel_Rack_LH	562465	male
A9.Cx2	FJB	563678	male	A63	Roof	562090	male
A9.Cx3	FJB	564037	male	A65.A	Parcel_Rack_LH	563025	male
A9.Cx4	FJB	564038	female	A65.B4	Parcel_Rack_LH	bidon	male
A10.A1	AboveLHRearAxle	563207	male	A65.B5	Parcel_Rack_LH	bidon	male
A10.A2	AboveLHRearAxle	564161	male	A65.B6	Parcel_Rack_LH	bidon	male
A10.A3	AboveLHRearAxle	564798	female	A65.D	Parcel_Rack_LH	bidon	male
A11	LHConsole	565940	male	A65.E	Parcel_Rack_LH	563071	male
A12.A	DriverArea	564699	male	A65.G1	Parcel_Rack_LH	563071	male
A14.A	Dash	562765	male	A65.G2	Parcel_Rack_LH	563071	male
A14.B	Dash	562764	male	A65.G3	Parcel_Rack_LH	563071	male
A14.C	Dash	562767	male	A65.H1	Parcel_Rack_LH	561716	female
A14.D	Dash	562766	male	A65.H2	Parcel_Rack_LH	561716	female
A15	Dash	562464	male	A65.H3	Parcel_Rack_LH	561716	female
A19.A	LH_Console	562878	female	A65.J	Parcel_Rack_LH	562465	male
A20	FrontRoof	562465	male	A69L.A	Parcel_Rack_LH	563025	male
A21.A	Dash	564038	female	A69L.B1	Parcel_Rack_LH	bidon	male
A21.B	Dash	564700	male	A69L.B2	Parcel_Rack_LH	bidon	male
A22	Dash	564004	male	A69L.B3	Parcel_Rack_LH	bidon	male
A23	P_Rack	564004	male	A69L.B4	Parcel_Rack_LH	bidon	male
A24	P_Rack	564004	male	A69L.C	Parcel_Rack_LH	bidon	male
A25	Parcel_Rack_LH	563025	male	A69R.A	Parcel_Rack_RH	563025	male
A26.P1	Enginecmpt.	562350	male	A69R.B1	Parcel_Rack_RH	bidon	male
A26.P2	Enginecmpt.	563322	female	A69R.B2	Parcel_Rack_RH	bidon	male
A27	Service_Cmpt	562929	male	A69R.B3	Parcel_Rack_RH	bidon	male
A28	Service_Cmpt	562928	male	A69R.B4	Parcel_Rack_RH	bidon	male
A29	FJB	564004	male	A69R.C	Parcel_Rack_RH	bidon	male
A31	P_Rack	564004	male	A70a.A	Parcel_Rack	561540	female
A34.J	Enginecmpt.	568118	male	A71	Dash	563884	male
A34.K	Enginecmpt.	564270	male	A77	Parcelrack	564547	male
A34.L	Enginecmpt.	564269	male	A78	Parcelrack	562583	female
A36A.JA	FJB	564325	male	A79	Parcelrack	562583	female
A36A.JB	FJB	562767	male	A80	Parcelrack	562479	female
A39.P101	Parcel_Rack_LH	563201	male	A81.CN1	FJB	562767	male

CONNECTORS LIST

No	Location	Part #	Gender	No	Location	Part #	Gender
A81.CN3A	FJB	564741	male	A122.C3	Parcel_Rack_LH	563958	male
A81.CN3B	FJB	564742	male	A123.A	Parcel_Rack_LH	563960	male
A83.A	FJB	565970	male	A123.B	Parcel_Rack_LH	563962	male
A95.A	P_Rack	564489	female	A123.C1	Parcel_Rack_LH	563956	male
A95.B	P_Rack	562706	female	A123.C2	Parcel_Rack_LH	563957	male
A95.C	P_Rack	562706	female	A123.C3	Parcel_Rack_LH	563958	male
A96.A	Front	563678	male	A124.A	Parcel_Rack_LH	563960	male
A96.B	Front	562795	male	A124.B	Parcel_rack	563962	male
A97A	Front	563226	male	A124.C1	Parcel_rack	563956	male
A97A	Front	563613	female	A124.C2	Parcel_rack	563957	male
A97B	Front	563226	male	A124.C3	Parcel_rack	563958	male
A97B	Front	563613	female	A127	Dashboard	562957	male
A99	Dash	564205	male	A128	Dash	563878	male
A100	FrontAxelAnt	563515	male	A129	Parcel_Rack_LH	563878	male
A101	FrontAxelAnt	563515	male	A130	Driver_Area	563226	male
A102	FrontAxelAnt	563515	male	A131.A	Engine_Cmpt	561782	male
A107	EngineCmpt.	560336	male	A131.B	Engine_Cmpt	561781	female
A108	RJB	562766	male	A137A	Condensercmpt.	20429843	male
A109A	FJB	564141	male	A138	Cond_Cmpt	563787	male
A111	Lavatory	562550	female	A150	Modesty_LH	562957	male
A114A	Bumper	564252	male	A150LH	Modesty_LH	562957	male
A116	Dash	563872	female	A150RH	Modesty_RH	562957	male
A120.A	Dash	563960	male	A152.A	Parcelrack	561550	male
A120.B	Dash	563962	male	A152.B	Parcelrack	563071	male
A120.C1	Dash	563956	male	A152.C	Parcelrack	563071	male
A120.C2	Dash	563957	male	A152.D	Parcelrack	563071	male
A120.C3	Dash	563958	male	A152.E	Parcelrack	563071	male
A120.USB_COM	Dash	563878	male	A152.F	Parcelrack	563071	male
A120A.J1	Dashboard	563525	male	A152.G	Parcelrack	563071	male
A120A.J2	Dashboard	563526	female	A152.H	Parcelrack	563071	male
A120A.J3	Dashboard	563527	female	A152.I	Parcelrack	563071	male
A120A.USB	Dash	563878	male	A152.J	Parcelrack	563071	male
A120A.USB_COM	Dashboard	563878	male	A152.K	Parcelrack	562779	male
A121.B	Dash	bidon	male	A152.L	Parcelrack	562779	male
A121.USB	Dash	563878	male	A162.A	Front_Roof	561690	male
A121.Vsa	Dashboard	563679	male	A162.B	Front_Roof	561782	male
A121.Vsb	Dashboard	563678	male	A164.A	Front_Roof	561690	male
A121.Vsc	Dashboard	564037	male	A164.B	Front_Roof	561782	male
A121.Vsd	Dashboard	564118	male	A166	Front_Roof	561637	male
A122.A	Parcel_Rack_LH	563960	male	A222M	LH_Mirror	564366	female
A122.B	Parcel_Rack_LH	563962	male	A222W.A	Outside_Front_LH	562485	male
A122.C1	Parcel_Rack_LH	563956	male	A222W.B	FR_RH_Outside	562485	male
A122.C2	Parcel_Rack_LH	563957	male	A223M	RH_Mirror	564366	female

CONNECTORS LIST

No	Location	Part #	Gender	No	Location	Part #	Gender
A223W.A	FR_LH_Outside	562485	male	AE50.J1	RJB	563679	male
A223W.B	FR_RH_Outside	562485	male	AE50.J2	RJB	564037	male
A614.A	P_RACK	561550	male	AE50.J3	RJB	565957	male
A614.C1	P_RACK	563071	male	AE51.J1	RJB	563679	male
A614.C2	P_RACK	563071	male	AE51.J2	RJB	564037	male
A614.C3	P_RACK	563071	male	AE51.J3	RJB	565957	male
A614.C4	P_RACK	563071	male	AE52.J1	RJB	563679	male
A614.C5	P_RACK	563071	male	AE52.J2	RJB	564037	male
A614.C6	P_RACK	563071	male	AE52.J3	RJB	565957	male
A614.I/O	Parcel_Rack	bidon	male	AE53.J1	RJB	563679	male
A614.P1	Parcel_Rack	562783	male	AE53.J2	RJB	564037	male
A614.P2	Parcel_Rack	562783	male	AE53.J3	RJB	565957	male
A614.P3	Parcel_Rack	562783	male	AE54.J1	Evaporatorcmpt.	563679	male
AE41.J1	FJB	563679	male	AE54.J2	Evaporatorcmpt.	564037	male
AE41.J2	FJB	564037	male	AE54.J3	Evaporatorcmpt.	565957	male
AE41.J3	FJB	564004	male	AE55.J1	Dash	563679	male
AE42.J1	FJB	563679	male	AE55.J2	Dash	564037	male
AE42.J2	FJB	564037	male	AE55.J3	Dash	564004	male
AE42.J3	FJB	564004	male	AE56.J1	Dash	563679	male
AE43.J1	FJB	563679	male	AE56.J2	Dash	564037	male
AE43.J2	FJB	564037	male	AE56.J3	Dash	564004	male
AE43.J3	FJB	565957	male	AE56_1_1142.J1	Dash	563679	male
AE44.J1	FJB	563679	male	AE56_1_1142.J2	Dash	564037	male
AE44.J2	FJB	564037	male	AE56_1_1142.J3	Dash	564004	male
AE44.J3	FJB	565957	male	AE57.J1	WCLcmpt.	563679	male
AE44_1_694.J1	Evaporatorcmpt.	563679	male	AE57.J2	WCLcmpt.	564037	male
AE44_1_694.J2	Evaporatorcmpt.	564037	male	AE57.J3	WCLcmpt.	564004	male
AE44_1_694.J3	Evaporatorcmpt.	565957	male	AE58.J1	P_Rack	563679	male
AE45.J1	FJB	563679	male	AE58.J2	P_Rack	564037	male
AE45.J2	FJB	564037	male	AE58.J3	P_Rack	565957	male
AE45.J3	FJB	565957	male	Alt_LL.B	Eng._Cmpt	564410	female
AE46.J1	FJB	563679	male	Alt_LLMux.B	Engine_Cmpt	564410	female
AE46.J2	FJB	564037	male	Alt_UR.B	Eng._Cmpt	564469	female
AE46.J3	FJB	565957	male	Alt_URMux.B	Engine_Cmpt	564469	female
AE47.J1	RH_console	563679	male	AltLL.A	Enginecmpt.	563746	female
AE47.J2	RH_console	564037	male	AltLL.B	Enginecmpt.	560815	female
AE47.J3	RH_console	565957	male	AltLL.C	Enginecmpt.	564469	female
AE48.J1	RH_console	563679	male	AltLR.A	enginecmpt.	563746	female
AE48.J2	RH_console	564037	male	AltLR.B	Enginecmpt.	560815	female
AE48.J3	RH_console	565957	male	AltLR.C	Enginecmpt.	564469	female
AE49.J1	RJB	563679	male	AltUR.A	Enginecmpt.	563746	female
AE49.J2	RJB	564037	male	AltUR.B	Enginecmpt.	560815	female
AE49.J3	RJB	565957	male	AltUR.C	Enginecmpt.	564469	female

CONNECTORS LIST

No	Location	Part #	Gender	No	Location	Part #	Gender
B85	Engine_Cmpt	563815	male	C11A.H		563142	male
B96	Engine_Cmpt	563821	male	C11A.H		564679	female
B96B	Engine_Cmpt	563823	male	C11A.X		561188	female
B97	Engine_Cmpt	563816	male	C11A.X		562363	male
B98	Engine_Cmpt	563817	male	C11B		562485	male
B99	Engine_Cmpt	563815	male	C11B		562486	female
B115A	Enginecmpt.	564226	male	C12	Engine_Cmpt	562581	male
B142C	Urea_Cmpt	563515	male	C12	Engine_Cmpt	562583	female
B310	Enginecmpt.	565967	male	C14	FJB	563580	male
C.A3		564849	male	C14	FJB	563581	female
C.A3		564798	female	C15A	Evapotatorcmpt.	568110	male
C.A11		564851	male	C15A	Evaporatotcmpt.	568109	female
C.A11		565940	female	C16	RJB	561577	male
C.A19_plug		562878	male	C16	RJB	561605	female
C.A19_socket		563513	female	C17		560195	male
C1	FJB	563589	male	C17		560169	female
C1	FJB	563590	female	C18	FJB	561986	male
C1S	FJB	563589	male	C18	FJB	561987	female
C1S	FJB	563590	female	C19	RJB	561986	male
C2	Service_Cmpt	563580	male	C19	RJB	561987	female
C2	Service_Cmpt	563581	female	C20A	Evap_Cmpt	562485	male
C2A	FJB	563580	male	C20A	Evap_Cmpt	562486	female
C2A	FJB	563581	female	C20B	Evap_Cmpt	562485	male
C2B	FJB	563580	male	C20B	Evap_Cmpt	562486	female
C2B	FJB	563581	female	C22	FJB	561986	male
C3_plug	RJB	563589	male	C22	FJB	561987	female
C3_socket	RJB	563590	female	C23	Evaporatorcmpt.	564034	male
C3AP	FJB	563589	male	C23	Evaporatorcmpt.	564035	female
C3AP	FJB	563590	female	C24_plug	Evap_Cmpt	561690	male
C3AS	FJB	563589	male	C24_socket	Evap_Cmpt	561566	female
C3AS	FJB	563590	female	C25	P_Rack	561734	male
C3S	RJB	563593	male	C25	P_Rack	561735	female
C3S	RJB	563590	female	C25A	P_Rack	561734	male
C4	FJB	563580	male	C25A	P_Rack	561735	female
C4	FJB	563581	female	C26	Ureacmpt.	563226	male
C5	FJB	563589	male	C26	Ureacmpt.	563613	female
C5	FJB	563590	female	C26A	Ureacmpt.	568110	male
C8	FJB	568112	male	C26A	Ureacmpt.	568109	female
C8	FJB	568111	female	C26B	Ureacmpt.	563227	male
C9	RJB	561986	male	C26B	Ureacmpt.	563614	female
C9	RJB	561987	female	C27	Front	563618	male
C10	Engine_Cmpt	562581	male	C27	Front	563616	female
C10	Engine_Cmpt	562583	female	C28	Dash	561986	male

CONNECTORS LIST

No	Location	Part #	Gender	No	Location	Part #	Gender
C28	Dash	561987	female	C47	FJB	565207	male
C29	4rd_Lugg_Cmpt	563651	male	C48	RJB	565208	male
C29	3rd_Lugg_Cmpt	563652	female	C49	FJB	562005	male
C30	3rd_Lugg_Cmpt	561710	male	C49	FJB	561714	female
C30	3rd_Lugg_Cmpt	561709	female	C50	RJB	563933	male
C31W	Lugg_Cmpt	563227	male	C50	RJB	563932	female
C31W	Lugg_Cmpt	563614	female	C51		563589	male
C32	Lavatory	561734	male	C51		563590	female
C32	Lavtory	561735	female	C53		561986	male
C32W	Lugg_Cmpt	561734	male	C53		561987	female
C32W	Lugg_Cmpt	561735	female	C54	Engine_Cmpt.	563226	male
C33	WCLcmpt.	564034	male	C54	Engine_Cmpt.	563613	female
C33	WCLcmpt.	564035	female	C54A	Ureacmpt.	568110	male
C34	Dash	561986	male	C54A	Ureacmpt.	568109	female
C34	Dash	561987	female	C54B	Engine_Cmpt.	562477	male
C35	Dash	561986	male	C54B	Engine_Cmpt.	562479	female
C35	Dash	561987	female	C55	Evap_Cmpt	561577	male
C36	FJB	561986	male	C55	Evap_Cmpt	561605	female
C36	FJB	561987	female	C56	Front	562581	male
C37	P_Rack	561986	male	C56	Front	562583	female
C37	P_Rack	561987	female	C59	RJB	561643	male
C38	P_Rack	561986	male	C59	RJB	561642	female
C38	P_Rack	561987	female	C60		563226	male
C38A	P_Rack	561515	male	C60		563613	female
C38A	P_Rack	561552	female	C61	Door	563347	male
C39	Parcelrack	562503	male	C61	Door	563180	female
C39	Parcelrack	562507	female	C63	Entrace_Door	562581	male
C39A	Firesuppressioncmpt.	561782	male	C63	Entrace_Door	562583	female
C39A	Firesuppressioncmpt.	561781	female	C64	Enginecmpt.	568110	male
C40W	P_Rack	561515	male	C64	Enginecmpt.	568109	female
C40W	P_Rack	561552	female	C64X	WCL_Door	560898	male
C41	RJB	561782	male	C64X	WCL_Door	560900	female
C41	RJB	561781	female	C66_plug	Evap_Cmpt	561577	male
C42	Front	562285	male	C66_socket	Evap_Cmpt	561605	female
C42	Front	562282	female	C68	FJB	561643	male
C43	Front	562581	male	C68	FJB	561642	female
C43	Front	562583	female	C71	FJB	561646	male
C44_plug	FJB	561577	male	C71	FJB	561644	female
C44_socket	FJB	561605	female	C72	FJB	561646	male
C45	Front	561646	male	C72	FJB	561644	female
C45	Front	561645	female	C74	FJB	561713	male
C46	3rdlugg.cmpt.	562549	male	C74	FJB	561714	female
C46	3rdlugg.cmpt.	562550	female	C77	P_Rack	561986	male

CONNECTORS LIST

No	Location	Part #	Gender	No	Location	Part #	Gender
C77	P_Rack	561987	female	C131A	Engine_Cmpt	561782	male
C80	WCL	564740	male	C131A	Engine_Cmpt	561781	female
C81	WCL	564740	male	C131B	Engine_Cmpt	561782	male
C82	P_Rack	561247	male	C131B	Engine_Cmpt	561781	female
C82	P_Rack	561248	female	C144	FJB	562006	male
C83	P_Rack	561247	male	C144	FJB	560908	female
C83	P_Rack	561248	female	C150	Modesty_LH	562957	male
C87	Engine_Cmpt	562485	male	C150	Modesty_LH	564406	female
C87	Engine_Cmpt	562486	female	C150A		564740	male
C88	WCL_Cmpt.	563226	male	C152	Cond_Cmpt	561611	male
C88	WCL_Cmpt.	563613	female	C152	Cond_Cmpt	561610	female
C90	RJB	563582	male	C157_plug	Parcel_Rack	561637	male
C90	RJB	563583	female	C157_socket	Parcel_Rack	561636	female
C91	RJB	562285	male	C159	Parcel_Rack	561577	male
C91	RJB	562282	female	C159	Parcel_Rack	561605	female
C94	FJB	563589	male	C159_LH_plug	Parcel_Rack	561247	male
C94	FJB	563590	female	C159_LH_socket	Parcel_Rack	561248	female
C99	Enginecmpt.	562581	male	C159_RH_plug		561247	male
C99	Enginecmpt.	562583	female	C159_RH_socket		561248	female
C100	Evaporatorcmpt.	562477	male	C162	Front_Clearance	561690	male
C100	Evaporatorcmpt.	562479	female	C162	Front_Clearance	561566	female
C100S	Evaporator_Cmpt.	562477	male	C164A	P_Rack	561690	male
C100S	Evaporator_Cmpt.	562479	female	C164A	P_Rack	561566	female
C101		562581	male	C164B		561782	male
C101		562583	female	C164B		561781	female
C107A	Enginecmpt.	562885	female	C167	Parcel_Rack_LH	561577	male
C107A	Enginecmpt.	562884	female	C167	Parcel_Rack_LH	561605	female
C107B	Enginecmpt.	562885	female	C173	Modesty_LH	563071	male
C107B	Enginecmpt.	562884	female	C173	Modesty_LH	563040	female
C107C	Enginecmpt.	562885	female	C175	RJB	563226	male
C107C	Enginecmpt.	562884	female	C175	RJB	563613	female
C110	Dash	568110	male	C193_plug	RJB	563589	male
C110	Dash	568109	female	C193_socket	RJB	563590	female
C111	Pneumatic_Plate	564547	male	C194	FJB	563589	male
C111	Pneumatic_Plate	564562	female	C194	FJB	563590	female
C119A	Rear_engine_door	568110	male	C195	Dash	563347	male
C119A	Rear_engine_door	568109	female	C195	Dash	560489	female
C124	Front_Roof	562503	male	C222	FJB	562477	male
C124	Front_Roof	562507	female	C222	FJB	562479	female
C129	Dashboard	562464	male	C226	Front	562650	male
C129	Dashboard	565871	female	C226	Front	562649	female
C130	Dash	562581	male	C228	Engine_Cmpt	562477	male
C130	Dash	562583	female	C228	Engine_Cmpt	562479	female

CONNECTORS LIST

No	Location	Part #	Gender	No	Location	Part #	Gender
C240		901786	Female	C400	P_Rack	561644	female
C248		564740	male	C430		561986	male
C279	Service_Cmpt	562477	male	C430		561987	female
C279	Service_Cmpt	562479	female	C452		561643	male
C284	Parcel_Rack	561247	male	C452		561642	female
C284	Parcel_Rack	561248	female	C463	Rearaxlecmpt.	568111	female
C284_1		561247	male	C463	Rearaxlecmpt.	568112	male
C284_1		561248	female	C464	FJB	564222	female
C284_2		561247	male	C464	FJB	564224	male
C284_2		561248	female	C464A	Dash	564222	female
C284_3		561247	male	C464A	Dash	564224	male
C284_3		561248	female	C464B	FJB	564222	female
C284_4		561247	male	C464B	FJB	564224	male
C284_4		561248	female	C465	Parcelrack	562581	male
C284_5		561247	male	C465	Parcelrack	562583	female
C284_5		561248	female	C540		562477	male
C284_6		561247	male	C540		562479	female
C284_6		561248	female	C541		563226	male
C298	Parcel_Rack	561611	male	C541		563613	female
C298	Parcel_Rack	561610	female	C542	Parcelrack	561550	male
C355	RJB	563582	male	C542	Parcelrack	561667	female
C355	RJB	565887	female	C543	LH_Parcel_Rack	561607	male
C355A	RJB	563582	male	C543	LH_Parcel_Rack	561606	female
C355A	RJB	565887	female	C545		561550	male
C356	P_Rack	561646	male	C545		561667	female
C356	P_Rack	561644	female	C564	Parcelrack	562503	male
C356A	P_Rack	561773	male	C564	Parcelrack	562507	female
C356A	P_Rack	561772	female	C566	Parcelrack	562503	male
C357	P_Rack	561695	male	C566	Parcelrack	562507	female
C357	P_Rack	561694	female	C567	Parcelrack	562503	male
C380A	Dash	564222	female	C567	Parcelrack	562507	female
C380A	Dash	564224	male	C568		562503	male
C381	Parcel_Rack	561847	male	C568		562507	female
C381	P_Rack	561924	female	C575		561668	male
C382	Under_Seat	561580	male	C575		561551	female
C382	Under_Seat	561582	female	C580		563589	male
C382.B_plug		561637	male	C580		563590	female
C382.B_socket		561636	female	C581		563589	male
C383_plug		562464	male	C581		563590	female
C383_socket		565871	female	C582		563589	male
C397	RJB	562285	male	C582		563590	female
C397	RJB	562282	female	C583		563589	male
C400	P_Rack	561646	male	C583		563590	female

CONNECTORS LIST

No	Location	Part #	Gender	No	Location	Part #	Gender
C600		563226	male	C_Audio_HDMI_L	Parcel_Rack	901062	male
C600		563613	female	C_Audio_HDMI_L	Parcel_Rack	901283	female
C600A		563226	male	C_Audio_HDMI_R	Parcel_Rack	901062	male
C600A		563613	female	C_Audio_HDMI_R	Parcel_Rack	901283	female
C600B		563226	male	C_AUX	Parcelrack	563071	male
C600B		563613	female	C_AUX	Parcelrack	563040	female
C614	Passenger_Area	563071	male	C_AUX_2		563071	male
C614	Passenger_Area	563040	female	C_AUX_2		563040	female
C615	Passenger_Area	563071	male	C_EIF		564963	male
C615	Passenger_Area	563040	female	C_EIF		564962	female
C621		560898	male	C_LineOut	Parcelrack	563962	male
C621		560900	female	C_LineOut	Parcelrack	564489	female
C626		562485	male	C_Mo9	Evap_Cmpt	561577	male
C626		562486	female	C_Mo9	Evap_Cmpt	561605	female
C629		561690	male	C_Probe		562485	male
C629		561566	female	C_Probe		562486	female
C630		561690	male	C_Se51		563589	male
C630		561566	female	C_Se51		563590	female
C633		560898	male	C_Speak		564726	male
C633		560900	female	C_Speak		564727	female
C634		560898	male	CAc1		561572	male
C634		560900	female	CAc2		561572	male
C636		560898	male	CAc2A		562338	female
C636		560900	female	CAc3A		564771	female
C645		560898	male	CAc4		564772	female
C645		560900	female	CB_DcDc.A		564238	male
C700		561637	male	CBPass		564004	male
C700		561636	female	CBPass		564061	female
C768	Parcel_Rack	901062	male	CCAN1	FJB	562650	male
C768	Parcel_Rack	901283	female	CCAN1	FJB	562649	female
C769	Parcel_Rack	901062	male	CCAN2	FJB	562650	male
C769	Parcel_Rack	901283	female	CCAN2	FJB	562649	female
C777	Dashboard	562581	male	CCAN3	FJB	562650	male
C777	Dashboard	562583	female	CCAN3	FJB	562649	female
C_A11A		565940	male	CCAN4	FJB	562650	male
C_A11A		564851	female	CCAN4	FJB	562649	female
C_A11B		565940	male	CCust	RJB	562477	male
C_A11B		564851	female	CCust	RJB	562479	female
C_A69R	Parcel_Rack	563025	male	Ccust.		562477	male
C_ALT1	Engine_Cmpt	563226	male	Ccust.		562479	female
C_ALT1	Engine_Cmpt	563613	female	CDrv		561782	male
C_ALT2	Engine_Cmpt	563618	male	CDrv		561781	female
C_ALT2	Engine_Cmpt	563616	female	CFHPR1	Parcelrack	564560	male

CONNECTORS LIST

No	Location	Part #	Gender	No	Location	Part #	Gender
CL.101		563589	male	L1A	Enginecmpt.	560774	male
CL.101		563590	female	L3.A		562557	male
CL101_plug		563589	male	L3.B		562558	female
CL101_socket		563590	female	L4.A		562557	male
CL101A.		563589	male	L4.B		562558	female
CL101A.		563590	female	L5.A		562503	male
CL102		563589	male	L5.B		562550	female
CL102		563590	female	L6		564724	male
CL102A.		563589	male	L7		564724	male
CL102A.		563590	female	L11		563858	male
CL103		563589	male	L12		563858	male
CL103		563590	female	L13		563858	male
CL103A.		563589	male	L14		563858	male
CL103A.		563590	female	L15		563858	male
CMo9A		561577	male	L16.A	Frontroof	562615	female
CMo9A		561605	female	L16.B	Frontroof	562615	female
CMo9B		561577	male	L17.A	Frontroof	562615	female
CMo9B		561605	female	L17.B	Frontroof	562615	female
CP1	Passenger_Area	561782	male	L18	Entrance_Door	563590	female
CP1	Passenger_Area	561781	female	L19		563858	male
CP2	Passenger_Area	561782	male	L20		563858	male
CP2	Passenger_Area	561781	female	L21	Upper_front	560605	female
CP3	Passengersarea	561782	male	L22	Upper_front	560605	female
CP3	Passengersarea	561781	female	L23	Upper_front	560605	female
CP4	Passenger_Area	561782	male	L24	Upper_front	560605	female
CP4	Passenger_Area	561781	female	L25	Upper_front	560605	female
CP5	Passenger_Area	561782	male	L26	Upper_front	560605	female
CP5	Passenger_Area	561781	female	L27	Upper_front	560605	female
CP6		561782	male	L52	Parcelrack	560898	male
CP6		561781	female	L52	Parcelrack	560900	female
CP_DR.A		561782	male	L52A	Parcelrack	560898	male
CSX1	Engine_Cmpt	563135	male	L53	Parcelrack	560898	male
CSX1	Engine_Cmpt	563134	female	L53	Parcelrack	560900	female
CSX3	Engine_Cmpt	563135	male	L53A	Parcelrack	560898	male
CSX3	Engine_Cmpt	563134	female	L54	Parcelrack	560898	male
CT_IN	Rear_Vehicle	560167	male	L54	Parcelrack	560900	female
CT_IN	Rear_Vehicle	560159	female	L54A	Parcelrack	560898	male
CT_IN.		563582	male	L55	Parcelrack	560898	male
CT_IN.		563583	female	L55	Parcelrack	560900	female
CT_IN2		560167	male	L55A	Parcelrack	560898	male
CT_IN2		560159	female	L56	Parcelrack	560898	male
CT_Out	Rear_Vehicle	560233	female	L56	Parcelrack	560900	female
EI	Enginecmpt.	563739	male	L56A	Parcelrack	560898	male

CONNECTORS LIST

No	Location	Part #	Gender	No	Location	Part #	Gender
L57	Parcelrack	560898	male	L103A.A		563589	male
L57	Parcelrack	560900	female	L133.A		562503	male
L57A	Parcelrack	560898	male	L133.B		562550	female
L58	Parcelrack	560898	male	L134.A		562503	male
L58	Parcelrack	560900	female	L134.B		562550	female
L58A	Parcelrack	560898	male	L134WCL1.A		562503	male
L59		563858	male	L134WCL1.B		562550	female
L63	Front_Side_LH	562155	male	L134WCL2.A		562503	male
L64	Outside_Front_RH	562155	male	L135.A		562503	male
L64X		560898	male	L135.B		562550	female
L65	Outside_Front_LH	562155	male	L136.A		562503	male
L66	Out_Side_Front_LH	562155	male	L136.B		562550	female
L67	4th_Lugg_Cmpt	562155	male	L137.A		562557	male
L68	4th_Lugg_Cmpt	562155	male	L138		562557	male
L69	4th_Lugg_Cmpt	562155	male	L138WCL.A		562557	male
L70	4th_Lugg_Cmpt	562155	male	L139.A		562503	male
L72	Rear_Vehicle	562155	male	L139.B		562550	female
L74	Rear_Vehicle	562155	male	L139WCL.A		562503	male
L75	Rearenginedoor	562155	male	L139WCL.B		562550	female
L76	Rear_engine_door	562155	male	L140	Lavatory	561247	male
L81.A	Rear_Vehicle	562835	female	L141.A		562503	male
L81.B	Rear_Vehicle	562834	male	L141.B		562550	female
L82A	Rearvehicule	562348	female	L141WCL.A		562503	male
L83A	Rearvehicule	562348	female	L141WCL.B		562550	female
L84	Rear_roof	560605	female	L142	Lavatory	562006	male
L85	Rear_roof	560605	female	L143		564726	male
L86	Rear_roof	560605	female	L144		564726	male
L87	Rear_roof	560605	female	L145		564726	male
L88	Rear_roof	560605	female	L146		564726	male
L89	Rear_roof	560605	female	L147		564726	male
L90	Rear_roof	560605	female	L148		564726	male
L93.B	Engine_Cmpt.	563069	female	L149		564726	male
L94.A		563069	female	L150		564726	male
L94.B	Engine_Cmpt.	563069	female	L151		564726	male
L95	Outside_Front_LH	562485	male	L152		564726	male
L95A	Outside_Front_LH	562485	male	L153		564726	male
L96	Outside_Front_RH	562485	male	L154		564726	male
L96A	Outside_Front_RH	562485	male	L155		564726	male
L101.A		563589	male	L156		564726	male
L101A.A		563589	male	L157		564726	male
L102.A		563589	male	L158		564726	male
L102A.A		563589	male	L159		562557	male
L103.A		563589	male	L159WCL.A		562557	male

CONNECTORS LIST

No	Location	Part #	Gender	No	Location	Part #	Gender
L160.A		562503	male	L255		564726	male
L161.A		562503	male	L256		564726	male
L170		564719	male	L257		564726	male
L171		564734	male	L258		564726	male
L172		564719	male	L282	Engine_Cmpt	561690	male
L172RH	Modesty_RH	564719	male	L285.A	Rear_Vehicle	562835	female
L173	Parcelrack	563590	female	L285.B	Rear_Vehicle	562834	male
L174A	Parcelrack	563590	female	L286.A	Rear_Vehicle	562835	female
L175	Engine_Cmpt.	563590	female	L286.B	Rear_Vehicle	562834	male
L176	5th_Lugg_Cmpt	561247	male	L290	Engine_door	562565	female
L177	5th_Lugg_Cmpt	561247	male	L291	Engine_door	562565	female
L178	3rd_Lugg_Cmpt	561247	male	L298A	Enginecmpt.	563590	female
L179	3rd_Lugg_Cmpt	561247	male	L306	RJBcmpt.	561247	male
L180	2nd_Lugg_Cmpt	561247	male	L309		564734	male
L181	2nd_Lugg_Cmpt	561247	male	L310		564734	male
L182	1st_Lugg_Cmpt	561247	male	L314		564640	male
L183	1st_Lugg_Cmpt	561247	male	L315		564640	male
L184	Servicecmpt.	561247	male	L319	Under_WCL_platform	561247	male
L185.A	Servicecmpt.	561539	male	L350A.A	Rearaxlecmpt.	564552	male
L185.B	Servicecmpt.	561539	male	L350A.B	Rearaxlecmpt.	563340	male
L186.A	Dash	561539	male	L350A.C		562251	male
L186.B	Dash	561539	male	L600		562155	male
L187	Engine_Cmpt	561690	male	L601		562155	male
L188	Service_Cmpt	562486	female	L602		562155	male
L193		25192025	male	L603		562155	male
L199	Enginecmpt.	562848	male	L604		562155	male
L204	Parcel_Rack_RH	562803	male	L605		562155	male
L205	Enginecmpt.	562485	male	L606		562155	male
L206	Parcel_Rack_RH	562803	male	L607		562155	male
L208		564733	socket	L634		560898	male
L209		564733	socket	L635		560898	male
L243		564726	male	L660_1	Rear_Galley	560898	male
L244		564726	male	L660_2	Rear_Galley	560898	male
L245		564726	male	L660_3	Rear_Galley	560898	male
L246		564726	male	Mic_Driver_1.A	Parcel_rack	560999	male
L247		564726	male	Mic_Driver_2.A	Parcel_rack	560999	male
L248		564726	male	Mic_Guide_1.A	Parcel_rack	560999	male
L249		564726	male	Mic_Guide_3.A	Parcel_rack	560999	male
L250		564726	male	Mo1		562581	male
L251		564726	male	Mo3		564161	male
L252		564726	male	Mo5		563513	female
L253		564726	male	Mo6		563513	female
L254		564726	male	Mo7		560159	female

CONNECTORS LIST

No	Location	Part #	Gender	No	Location	Part #	Gender
Mo8		560159	female	Plasma10.A		564368	male
Mo9..B		561605	female	PR	Parcelrack	561782	male
Mo10		561515	male	PR	Parcelrack	561781	female
Mo11		561515	male	PR1	Passenger_Area	561782	male
Mo12	Engine_Cmpt	561690	male	PR1	Passenger_Area	561781	female
Mo13	Engine_Cmpt	561690	male	R1		562486	female
Mo14	Engine_Cmpt	561566	female	R3	RJB	563409	male
Mo15	Front_Ceiling	563517	female	R4	FJB	564496	male
Mo16	Front_Ceiling	563517	female	R5B		564496	male
Mo17	RH_Console	562350	male	R12	Evap_Cmpt	563409	male
Mo19		562474	male	R16	RJB	564496	male
Mo20		562474	male	R20	RJB	564496	male
Mo21		563515	male	R21	FJB	560525	male
Mo22		563515	male	R23A		564496	male
Mo24		561687	male	R26	Evap_Cmpt	564496	male
Mo25.A		564161	male	R29	RJB	563409	male
Mo27		560159	female	R30	FJB	564496	male
Mo28		560159	female	R31	FJB	564496	male
Mo62.		562486	female	R34	RJB	564210	male
Mo62A		562486	female	R35		564210	male
Mo65	Enginecmpt.	568089	male	R36	Dash	564496	male
Mo67	Enginecmpt.	568089	male	R37	Dash	564496	male
Mo68	Enginecmpt.	568089	male	R38	FJB	564496	male
Mo69	Enginecmpt.	568089	male	R40	RJB	564496	male
Mo70	Enginecmpt.	568089	male	R45.A		562291	female
Mo71	Enginecmpt.	568089	male	R45.B	RJB	562291	female
Mo72	Enginecmpt.	568089	male	R45.C		562651	female
Mo73	Enginecmpt.	568089	male	R45.D	RJB	562651	female
PC1	FJB	562650	male	R45.E		562291	female
PC1	FJB	562649	female	R47	Parcelrack	564496	male
PF	FJB	561782	male	R300		564496	male
PF	FJB	561781	female	R_12VISS	Parcel_rack	564496	male
PF1	Passenger_Area	561782	male	RadioVolvo1_1142.A	Parcel_Rack_LH	563960	male
PF1	Passenger_Area	561781	female	RadioVolvo1_1142.B	Parcel_rack	563962	male
Plasma1.A		564368	male	RadioVolvo1_1142.C1	Parcel_rack	563956	male
Plasma2.A		564368	male	RadioVolvo1_1142.C2	Parcel_rack	563957	male
Plasma3		564368	male	RadioVolvo1_1142.C3	Parcel_rack	563958	male
Plasma4		564368	male	Res1	Front	563590	female
Plasma5		564368	male	Res3.A	RJB	563590	female
Plasma6		564368	male	Res4	FJB	563590	female
Plasma7.A		564368	male	Res5		563590	female
Plasma8.A		564368	male	Res6	FJB	563590	female
Plasma9.A		564368	male	Res6A	FJB	563589	male

CONNECTORS LIST

No	Location	Part #	Gender	No	Location	Part #	Gender
Res6A	FJB	563590	female	Se31	Enginedoor	562877	female
Res6B	FJB	563589	male	Se32	Rear_Axle_Cmpt	562426	male
Res6B	FJB	563590	female	Se33	Rear_Axle_Cmpt	562856	male
Res7		563590	female	Se34		562427	male
Res15	Engine_Cmpt	561782	male	Se35	Rear_Axle_Cmpt	562426	male
Res16.A		563590	female	Se36	Rear_Axle_Cmpt	562427	male
Res17.A		563590	female	Se37	Front_Axle_LH	641132	female
Res31	Ureacmpt.	562350	male	Se38	Front_Axle_RH	641132	female
Res32	Ureacmpt.	563764	female	Se39	Rear_Axle_LH	641132	female
Res44	FJB	563590	female	Se40	Rear_Axle_LH	641132	female
Res53		563590	female	Se41	Condensor_cmpt.	562877	female
Res99		563590	female	Se43		564758	male
Se2A		561566	female	Se44		561626	female
Se3		561626	female	Se45		563409	male
Se4		561626	female	Se46	Rearaxlecmpt.	562348	female
Se5		561626	female	Se48		562479	female
Se6		561626	female	Se50		562477	male
Se7		561626	female	Se53		563159	female
Se8		561626	female	Se54		563159	female
Se9		563159	female	Se55		563159	female
Se10		561626	female	Se56		562479	female
Se11.A		560082	female	Se57		563159	female
Se11.B		560082	female	Se63	Rearaxlecmpt.	641132	female
Se11.C		560082	female	Se64	Rearaxlecmpt.	641132	female
Se12		561626	female	Se65	Dash	564042	female
Se13		563764	female	Se66	FJB	564039	female
Se14.A	Driver_Area	561782	male	Se67	Frontaxlecmpt.	563159	female
Se14.B	Driver_Area	561781	female	Se69	Frontaxlecmpt.	563159	female
Se16		564705	male	Se74	Rear_Axle_Cmpt	563340	male
Se17		561626	female	Se79	Front_Axle	563340	male
Se18		561566	female	Se89		563764	female
Se19_P	Service_Cmpt	563677	male	Se94		562877	female
Se19_S	Service_Cmpt	563677	male	Se100	WCLdoor	562479	female
Se20		564702	male	shell1_695		563589	male
Se21		563994	male	shell2_695		563589	male
Se22		561626	female	shell3_695		563589	male
Se23	Engine_Cmpt	563159	female	So3.A		641385	male
Se24	Evap_Cmpt	563758	female	So3.B		641385	male
Se25	Passenger_Area	561248	female	So4		641385	male
Se26		561626	female	So5		641385	male
Se27		561626	female	So7	Service_Cmpt	561690	male
Se29	Engine_Cmpt	561566	female	So8	Servicecmpt.	641385	male
Se30	Enginedoor	562877	female	So9	Enginecmpt.	560016	female

CONNECTORS LIST

No	Location	Part #	Gender	No	Location	Part #	Gender
So10	Cond_Cmpt	562485	male	Sw2		563498	female
So11	Cond_Cmpt	561566	female	Sw3		563498	female
So12		562848	male	Sw4		563498	female
So13	Evap_Cmpt	563204	female	Sw5.A		562291	female
So14	Servicecmpt.	641385	male	Sw5.B		562291	female
So15	Servicecmpt.	641385	male	Sw5.C		562291	female
So16	Servicecmpt.	641385	male	Sw6.A		562291	female
So17	Servicecmpt.	562848	male	Sw6.B		562291	female
So18.A		641385	male	Sw6.C		562291	female
So18.B		641385	male	Sw7		563677	male
So19.A		641385	male	Sw8		563498	female
So19.B		641385	male	Sw10A		563498	female
So20	Servicecmpt.	641385	male	Sw12		563498	female
So21	Front_Axle_Cmpt	564046	female	Sw14		563498	female
So22	Front_Axle_Cmpt	564046	female	Sw16		563498	female
So23	Rear_Axle_Cmpt	564046	female	Sw17		563498	female
So24	Rear_Axle_Cmpt	564046	female	Sw18A		563498	female
So27	Rearaxlecmpt.	564045	female	Sw20		563498	female
So50	Rearaxlecmpt.	564046	female	Sw22.A		564779	female
So51		641385	male	Sw22.B		564779	female
So52	Rearaxlecmpt.	564045	female	Sw22.C		564779	female
So53		641385	male	Sw23		563498	female
So54	Enginecmpt.	564045	female	Sw24		563498	female
So70.A		641385	male	Sw25		563498	female
So70.B		641385	male	Sw26		563498	female
spBar4	Enginecmpt.	564135	male	Sw27		563498	female
spBar5	Enginecmpt.	564135	male	Sw29		563498	female
spBar6	Enginecmpt.	564135	male	Sw30	RJB	563135	male
spBar7	Enginecmpt.	564135	male	Sw32	Dash	561477	female
spBar11	Engine_Cmpt.	564135	male	Sw33	Dash	561476	male
spBar12	Engine_Cmpt.	564135	male	Sw34	Outside_Front_RH	562477	male
spBar13	Enginecmpt.	564135	male	Sw37		563498	female
spBar14	Enginecmpt.	564135	male	Sw38		563498	female
spBar15	Enginecmpt.	564135	male	Sw39.A	RJB	562403	female
spBar16	Enginecmpt.	564135	male	Sw39.B	RJB	562403	female
spBar19	Condensorcmpt.	564135	male	Sw40	LH_Console	561690	male
spBar20	Condensorcmpt.	564135	male	Sw41	LH_Console	562749	male
spBar21	Condensorcmpt.	564135	male	Sw42	Lugg_Cmpt	561636	female
spBar22	Enginecmpt.	564135	male	Sw43		563498	female
spBar23	Enginecmpt.	564135	male	Sw44.A		562485	male
spBar24	Enginecmpt.	564135	male	Sw44.B		562486	female
Sub1.A	Passenger_Area	564004	female	Sw45.A	5th_Lugg_Cmpt	562485	male
Sub2.A	Passenger_Area	564004	female	Sw45.B	5th_Lugg_Cmpt	562486	female

CONNECTORS LIST

No	Location	Part #	Gender	No	Location	Part #	Gender
Sw46.A	5th_Lugg_Cmpt	562485	male	Sw158		563498	female
Sw46.B	5th_Lugg_Cmpt	562486	female	Sw161		563498	female
Sw47.A	3rd_Lugg_Cmpt	562485	male	Sw162.A		563498	female
Sw47.B	3rd_Lugg_Cmpt	562486	female	Sw164		563498	female
Sw48.A	3rd_Lugg_Cmpt	562485	male	Sw629		562763	male
Sw48.B	3rd_Lugg_Cmpt	562486	female	Sw660	Rear_Galley	562763	male
Sw49.A	2nd_Lugg_Cmpt	562485	male	Sw661	Rear_Galley	562763	male
Sw49.B	2nd_Lugg_Cmpt	562486	female	Sw663	Rear_Galley	562763	male
Sw50.A	2nd_Lugg_Cmpt	562485	male	sym698_166.A		564489	female
Sw50.B	2nd_Lugg_Cmpt	562486	female	sym698_166.B		562706	female
Sw51.A	1st_Lugg_Cmpt	562485	male	sym698_166.C		562706	female
Sw51.B	1st_Lugg_Cmpt	562486	female	sym699_166.A		564489	female
Sw52.A	1st_Lugg_Cmpt	562485	male	sym699_166.B		562706	female
Sw52.B	1st_Lugg_Cmpt	562486	female	sym699_166.C		562706	female
Sw55.A	Lavatory	560488	female	sym700_166.A		564489	female
Sw55.B	Lavatory	560488	female	sym700_166.B		562706	female
Sw56.A	Lavatory	560488	female	sym700_166.C		562706	female
Sw56.B	Lavatory	560488	female	sym770_34.A		561690	male
Sw58	Engine_Cmpt.	563135	male	sym810_1201.A		563071	male
Sw59	Enginecmpt.	563135	male	sym810_1201.B		562706	female
Sw64		563498	female	sym810_1201.C		901110	male
Sw70		562763	male	sym810_1201.D		901110	male
Sw82	RJB	563135	male	sym810_1201.E		560799	female
Sw83		564699	male	sym810_1201.F		bidon	male
Sw85	LH_Console	562749	male	sym871_408		564496	male
Sw95.A	WCLdoor	562615	female	sym889_1142.A	Passenger_Area	564004	female
Sw95.B	WCLdoor	562615	female	sym890_1142.A	Passenger_Area	564004	female
Sw95.C	WCLdoor	562615	female	sym891_1142.A	Passenger_Area	564004	female
Sw96.A	WCL_Door	562615	female	sym892_1142.A	Passenger_Area	564004	female
Sw96.B	WCL_Door	562615	female	sym893_1142.A	Parcel_Rack_LH	563025	male
Sw96.C	WCLdoor	562615	female	sym893_1142.B4	Parcel_Rack_LH	bidon	male
Sw97.A	WCLsystem	562615	female	sym893_1142.B5	Parcel_Rack_LH	bidon	male
Sw97.B	WCLsystem	562615	female	sym893_1142.B6	Parcel_Rack_LH	bidon	male
Sw97.C	WCLsystem	562615	female	sym893_1142.D	Parcel_Rack_LH	bidon	male
Sw98.A	WCLsystem	562615	female	sym893_1142.E	Parcel_Rack_LH	563071	male
Sw98.B	WCLsystem	562615	female	sym893_1142.G1	Parcel_Rack_LH	563071	male
Sw98.C	WCLsystem	562615	female	sym893_1142.G2	Parcel_Rack_LH	563071	male
Sw117		563498	female	sym893_1142.G3	Parcel_Rack_LH	563071	male
Sw122		563498	female	sym893_1142.H1	Parcel_Rack_LH	561716	female
Sw124		563498	female	sym893_1142.H2	Parcel_Rack_LH	561716	female
Sw152	Driver_Area	562471	male	sym893_1142.H3	Parcel_Rack_LH	561716	female
Sw156		563498	female	sym893_1142.J	Parcel_Rack_LH	562465	male
Sw157		563498	female	sym897_1142.A		564489	female

CONNECTORS LIST

No	Location	Part #	Gender	No	Location	Part #	Gender
sym897_1142.B		562706	female	Term00F2	FJB	563354	N/A
sym897_1142.C		562706	female	Term00F3	FJB	560086	N/A
sym899_1142.A	Parcel_Rack	561540	female	Term00F4	RJB	560086	N/A
sym901_1142.A	Parcel_Rack_LH	563025	male	Term0FH	FJBGndStud	560083	N/A
sym901_1142.B4	Parcel_Rack_LH	bidon	male	Term00FH3	FJB	561246	N/A
sym901_1142.B5	Parcel_Rack_LH	bidon	male	Term00FH4	FJB	561246	N/A
sym901_1142.B6	Parcel_Rack_LH	bidon	male	Term0R1	RJBChassisGndStud	560083	N/A
sym901_1142.D	Parcel_Rack_LH	bidon	male	Term00R1	RJB	560086	N/A
sym901_1142.E	Parcel_Rack_LH	563071	male	Term00R2	RJB	560103	N/A
sym901_1142.G1	Parcel_Rack_LH	563071	male	Term00R3	RJB	560086	N/A
sym901_1142.G2	Parcel_Rack_LH	563071	male	Term00R4	RJB	563354	N/A
sym901_1142.G3	Parcel_Rack_LH	563071	male	Term00R5	RJB	563354	N/A
sym901_1142.H1	Parcel_Rack_LH	561716	female	Term2	FJBGndStud	560083	N/A
sym901_1142.H2	Parcel_Rack_LH	561716	female	Term3	RJBChassisGndStud	560105	N/A
sym901_1142.H3	Parcel_Rack_LH	561716	female	Term4	RJB(RelayR3)	563538	N/A
sym901_1142.J	Parcel_Rack_LH	562465	male	Term5	RJBBreakersPanel	563538	N/A
sym912_1142.A		563589	male	Term7	RJB	563538	N/A
sym913_1142.A		563589	male	Term12VD4	RJBMasterRelay	561964	N/A
sym914_1142.A		563589	male	Term20	RJB(RelayR3)	563538	N/A
sym920_1142.A		563589	male	Term28	Evap_Cmpt	560587	N/A
sym921_1142.A		563589	male	Term36	FJBGndStud	560895	N/A
sym924_1142.A		563589	male	Term37	FJBGndStud	560894	N/A
sym925_1142.A		563589	male	Term43	FJBGndStud	563662	N/A
TBat1	RJB	563538	N/A	Term46	Evap_Cmpt	560108	N/A
TBat3	RJB	563538	N/A	Term47	RJB	561560	N/A
TBat5	RJB	563538	N/A	Term50	RJB	561626	N/A
TBat13	RJB	560111	N/A	Term51		560587	N/A
TBat15	RJB	563329	N/A	Term52		560587	N/A
TBat24	RJB	560895	N/A	Term54	RJB	562880	N/A
TBat25	RJBMasterRelay	562880	N/A	Term59	EvapCmpt.ChassisGndStud	560105	N/A
TBat35	RJB	560083	N/A	Term64	Evap_Cmpt	560108	N/A
TBat36	RJB	560083	N/A	Term75	Engine_Cmpt	564115	N/A
TBat39	RJB	562880	N/A	term76	Engine_Cmpt	565165	N/A
TBat40	RJB	560895	N/A	Term103-A	Engine_Cmpt	568125	N/A
Termgnd00F		560082	N/A	Term103-B	Engine_Cmpt	564026	N/A
Term0A	FJBGndStud	560083	N/A	Term106	RJB	565166	N/A
Term00A	FJB	560093	N/A	Term107	EvapCmpt.ChassisGndStud	564203	N/A
Term0EV1	EvapCmpt.ChassisGndStud	561560	N/A	Term116	Engine_Cmpt	563538	N/A
Term0EV2	EvapCmpt.ChassisGndStud	560083	N/A	Term117	Engine_Cmpt	563538	N/A
Term0F	FJBGndStud	561246	N/A	Term126	RJB(RelayR3)	563538	N/A
Term00F	RJB	560086	N/A	Term127	RJB(RelayR3)	561789	N/A
Term00F1	FJB	560086	N/A	Term130	RJB	560894	N/A
Term0F2	FJBGndStud	560083	N/A	Term131	FJBGndStud	561696	N/A

CONNECTORS LIST

No	Location	Part #	Gender	No	Location	Part #	Gender
Term132	FJBGndStud	560895	N/A	Term622	Fr_L_P_Rack	560094	N/A
Term135	Engine_Cmpt	564280	N/A	Term623	Fr_L_P_Rack	563623	N/A
Term141	Engine_Cmpt	565166	N/A	Term624	Fr_L_P_Rack	563623	N/A
Term145	Fr_LH_P_Rack	563623	N/A	Term640	Fr_L_P_Rack	560094	N/A
Term149	UreaCmpt.	561964	N/A	Term641	Fr_L_P_Rack	560094	N/A
Term149A	UreaCmpt.	561964	N/A	Term642	Fr_L_P_Rack	560094	N/A
Term151	RJBBreakersPanel	563537	N/A	Term643	Fr_L_P_Rack	560094	N/A
Term153A	RJBBreakersPanel	563537	N/A	Term644	Fr_L_P_Rack	560094	N/A
Term154A	EvapCmpt.ChassisGndStud	560105	N/A	Term645	Fr_L_P_Rack	560094	N/A
Term154H	Parcel_Rack_LH	560587	N/A	Term_12V_ECU	RJB	560926	N/A
Term155H	Parcel_Rack_LH	560587	N/A	Term_A49pwm		563622	N/A
Term159	Fr_L_P_Rack	565199	N/A	Term_AE43J2.9	Fr_LH_P_Rack	562806	N/A
Term160	Fr_L_P_Rack	565201	N/A	Term_AE43J2.13	Fr_LH_P_Rack	562806	N/A
Term161	Fr_L_P_Rack	565199	N/A	Term_AE46J1.4	Fr_LH_P_Rack	562806	N/A
Term163A	Fr_L_P_Rack	560094	N/A	Term_AE46J1.5	Fr_LH_P_Rack	562806	N/A
Term163B	Fr_L_P_Rack	560094	N/A	Term_AE46J1.7	Fr_LH_P_Rack	562806	N/A
Term163C	Fr_L_P_Rack	560094	N/A	Term_c600.2	Fr_LH_P_Rack	562286	N/A
Term164A	Fr_L_P_Rack	560094	N/A	Term_c600.3	Fr_LH_P_Rack	562286	N/A
Term164B	Fr_L_P_Rack	560094	N/A	Term_CB1	RJBBreakersPanel	564025	N/A
Term164C	Fr_L_P_Rack	560094	N/A	Term_CB2	RJB	564024	N/A
Term165A	Fr_L_P_Rack	560094	N/A	Term_CB2A	RJBBreakersPanel	561560	N/A
Term165B	Fr_L_P_Rack	560094	N/A	Term_CB3	RJBBreakersPanel	564025	N/A
Term165C	Fr_L_P_Rack	560094	N/A	Term_CB5	RJBBreakersPanel	564025	N/A
Term169A	Fr_L_P_Rack	560094	N/A	Term_CB6	RJB	564024	N/A
Term169B	Fr_L_P_Rack	560094	N/A	Term_CB6A	RJBBreakersPanel	561560	N/A
Term169C	Fr_L_P_Rack	560094	N/A	Term_CB8	RJBBreakersPanel	564027	N/A
Term170A	Fr_L_P_Rack	560094	N/A	Term_CB9A	RJB	561246	N/A
Term170B	Fr_L_P_Rack	560094	N/A	Term_CB10	RJBBreakersPanel	564026	N/A
Term170C	Fr_L_P_Rack	560094	N/A	Term_CB11	RJBBreakersPanel	561560	N/A
Term176		560082	N/A	Term_CB12	RJBBreakersPanel	560105	N/A
Term180	Engine_Cmpt	560894	N/A	Term_CB13	RJBBreakersPanel	560105	N/A
Term195		560587	N/A	Term_Evap_Fan	Evap_Cmpt	560108	N/A
Term200	Engine_Cmpt	560027	N/A	Term_Evap_Relay	Evap_Cmpt	561788	N/A
Term201	FJBGndStud	564116	N/A	Term_FJB_GND_Jump	FJB	561966	N/A
Term210	Engine_Cmpt	560840	N/A	Term_Inv_24V_Stud	RJBBreakersPanel	563537	N/A
Term211	Engine_Cmpt	560826	N/A	Term_Inv_GndStud	RJBBreakersPanel	563537	N/A
Term212	Engine_Cmpt	565165	N/A	Term_Led_Preh_12VD	RJBMasterRelay	560076	N/A
Term213	Engine_Cmpt	561458	N/A	Term_R_Melco_Block	RJBBreakersPanel	560104	N/A
Term230	RJB	560895	N/A	Term_R_Melco_Starter	Engine_Cmpt	560103	N/A
Term610	RJBChassisGndStud	561964	N/A	Term_RJB_Ctrl_12VD	RJBMasterRelay	563536	N/A
Term611	RJBChassisGndStud	561818	N/A	Term_RJB_GND_Jump	RJB	561966	N/A
Term620	Fr_L_P_Rack	560094	N/A	Term_VECF_12VD	FJB	564028	N/A
Term621	Fr_L_P_Rack	560094	N/A	Term_VECF_12WUP	FJB	564023	N/A

CONNECTORS LIST

No	Location	Part #	Gender	No	Location	Part #	Gender
Term_VECF_24WUP	FJB	564027	N/A	VECR4	RJB	563182	male
Term_VECR_12WUP	RJB	564025	N/A	VECR9	RJB	563448	male
Term_VECR_24VD	RJB	564024	N/A	VECR10	RJB	563181	male
Term_VECR_24WUP	RJB	564025	N/A	VECR11	RJB	563184	male
TermA26P2.F	RJBBreakersPanel	562405	N/A	VECR12	RJB	563187	male
TermAFSS	Luggage_Cmpt	560083	N/A	VECRHC		566040	female
TermF26	FJB	562101	N/A	VECT3	Rear_vehicule	563718	male
TermGnd	Evap_Cmpt	561964	N/A	VECT4	Rear_vehicule	563714	male
TermGnd1	Rr_Seat	561626	N/A	Y80	Engine_Cmpt	563789	male
TermL74	Fr_LH_P_Rack	563623	N/A	Y81	Cond_Cmpt	563793	male
TermNeg	Engine_Cmpt	560086	N/A				
TermPos	Engine_Cmpt	560086	N/A				
TermR5	Fr_LH_P_Rack	563623	N/A				
TermR12	Evap_Cmpt	560096	N/A				
TermR12-3	Evap_Cmpt	561788	N/A				
TermR12-5	Evap_Cmpt	561788	N/A				
TermR21-A	FJB	560076	N/A				
TermR21-B	FJB	560076	N/A				
TermR210.A	Parcelrack	560076	N/A				
TermR210.B	Parcelrack	560076	N/A				
TermRad1	FJBGndStud	561955	N/A				
TermRad2	FJBGndStud	561955	N/A				
TermRHC1	FJB	561560	N/A				
TermRHC2	FJB	563354	N/A				
TermRHC3	FJB	560926	N/A				
TermRHC4		563354	N/A				
TermStart1	Engine_Cmpt	564573	N/A				
TermStart2	Engine_Cmpt	560103	N/A				
TermStpG1		560082	N/A				
TGND_TR	RJBChassisGndStud	560083	N/A				
TGNDR4	RJB	564978	N/A				
TGNDR12	RJB	561789	N/A				
VECF1	FJB	563186	male				
VECF2	FJB	563183	male				
VECF3	FJB	563185	male				
VECF4	FJB	563182	male				
VECF9	FJB	563448	male				
VECF10	FJB	563181	male				
VECF11	FJB	563184	male				
VECF12	FJB	563187	male				
VECR1	RJB	563186	male				
VECR2	RJB	563183	male				
VECR3	RJB	563185	male				

DIODES LIST

No	Location	Part #	Function	Page					
D1	FJB	561740	Accessoriesdiode	3.2					
D2	FJB	561740	Driverliquidsolenoiddiode	18.1					
D6	RJB	561740	FlybackdiodeMasterrelay	3.1					
D7	RH_Console	561740	Entracedoordiode	29.1					
D8	Evap_Cmpt	561740	Parcelrackliquidsolenoiddiode	18.3					
D9	Evap_Cmpt	561740	HVACdiode	17.1					
D10	Evap_Cmpt	561740	Pre-Heatdiode	17.1					
D11	Evap_Cmpt	561740	Passengersliquidsolenoiddiode	18.2					
D12	FJB	565973	Hornwhilefireextinguisherdiode	9.1					
D13	FJB	561740	Frontclearancelightsdiode	26.1					
D14	FJB	561740	FireExtinguisher	9.1					
D18	FJB	561740	5thluggagecompartementlightingdiode	25.1					
D29	RJB	561740	FlybackdiodeUnloader	18.2					
D30	Evap_Cmpt	561740	FlybackdiodeWaterpump	18.2					
D31	RJB	561740	FlybackdiodeA/Cclutch	18.2					
D32	Engine_Cmpt	561740	FlybackdiodeAirexhaust	11.1					
D33	RJB	561740	FlybackdiodeFlushingpump	11.1					
D41	FJB	561740	Avoidvoltagebackfeed	3.2					
D43	FJB	561740	Avoidvoltagebackfeed	3.2					
D44	FJB	561740	Ignitiondiode	3.2					
D60	RJB	560931	Offshoreheatingsystem	17.1					
D62.	Rear_Roof	561740	PeakRevdiode	18.5					
D63.	Rear_Roof	561740	PeakRevdiode	18.5					
D73	Evap_Cmpt	561740	Evaporatorrelaydiode	18.2					
D80	Evap_Cmpt	561740	Cutoffwaterpreheaterdiode	38.1					

DIODES LIST

No	Location	Part #	Function	Page					
D1	FJB	561740	Accessoriesdiode	3.2					
D2	FJB	561740	Driverliquidsolenoiddiode	18.1					
D6	RJB	561740	MasterRelay	3.1					
D7	RH_Console	561740	Entracedoordiode	29.1					
D8	Evap_Cmpt	561740	Parcelrackliquidsolenoiddiode	18.3					
D9	Evap_Cmpt	561740	HVACdiode	17.1					
D10	Evap_Cmpt	561740	Pre-Heatdiode	17.1					
D11	Evap_Cmpt	561740	Passengersliquidsolenoiddiode	18.2					
D12	FJB	565973	Hornwhilefireextinguisherdiode	9.1					
D13	FJB	561740	Frontclearancelightsdiode	26.1					
D14	FJB	561740	FireExtinguisher	9.1					
D15	Evap_Cmpt	561740	*opt*	18.2					
D16	Evap_Cmpt	561740	*opt*	18.2					
D18	FJB	561740	5thluggagecompartementlightingdiode	25.1					
D29	RJB	561740	FlybackdiodeUnloader	18.2					
D30	Evap_Cmpt	561740	FlybackdiodeWaterpump	18.2					
D31	RJB	561740	FlybackdiodeA/Cclutch	18.2					
D32	Engine_Cmpt	561740	FlybackdiodeAirexhaust	11.1					
D33	RJB	561740	FlybackdiodeFlushingpump	11.1					
D41	FJB	561740	Avoidvoltagebackfeed	3.2					
D43	FJB	561740	Avoidvoltagebackfeed	3.2					
D44	FJB	561740	Ignitiondiode	3.2					
D60	RJB	565267	Offshoreheatingsystem	17.1					
D61	Evap_Cmpt	381145	Offshoreheatingsystem	18.2					
D62.	Rear_Roof	561740	PeakRevdiode	18.5					
D63.		561740	PeakRevdiode	18.5					
D65	Evap_Cmpt	381145	Offshoreheatingsystem	18.2					
D73	Evap_Cmpt	561740	Evaporatorrelaydiode	18.2					
D80	Evap_Cmpt	561740	Cutoffwaterpreheaterdiode	38.1					

RESISTORS LIST

No	Location	Part #	Function	Page					
Res1	Front_Service_Pane	563593	TPMS	39.1					
Res2	Dashboard	563205	PullDownResistor	18.1					
Res3	RJB	563593	EndoflineresistanceBBUSnetwork120ohms4W	6.1					
Res4	FJB	563593	EndoflineresistanceBBUS1	6.1					
Res6	FJB	563593	EndoflineresistanceDBUSnetwork120ohms4W	6.2					
Res7	FJB	563593	EndoflineresistanceDBUSnetwork120ohms4W	6.2					
Res8	ParcelRack	563205	PullDownPrackFan	18.3					
Res9	Dashboard	563205	PullDownResistor	18.1					
Res10	Dashboard	563205	PullDownResistor	18.1					
Res11	RJB	563205	PullDownRes	4.2					
Res12	Dashboard	562498	ReduceMirrorSpeedResistor	31.1					
Res13	Dashboard	562498	ReduceMirrorSpeedResistor	31.1					
Res14	RJB	563205	Evaporatorfans620ohms2W	18.2					
Res15	Engine_Cmpt	563587	EndoflineresistanceFlamedetec.device10kohms	38.1					
Res16	FJB	563593	EndoflineresistanceDBUSnetwork120ohms4W	6.1					
Res17	FJB	563593	EndoflineresistanceDBUSnetwork120ohms4W	6.1					
Res21	RJB	563205	RJBcompartementlights620ohms2W	25.1					
Res22	RJB	563205	Luggagecmpt.lighting620ohms2W	25.1					
Res31	Cmpt_fuel_tank	41123	Ureatankheatingelement(Heatedhose)	14.2					
Res32	Cmpt_fuel_tank	41123	Ureatankheatingelement(Heatedhose)	14.2					
Res53	FJB	563593	EndoflineresistanceDBUSnetwork120ohms4W	6.2					
Res99	Dashboard	563593	CANNetwork	42.4					

RESISTORS LIST

No	Location	Part #	Function	Page					
Res1	Front_Service_Panel	563593	TPMS	39.1					
Res2	Dash	*opt*	PullDownResistor	18.1					
Res3	RJB	563593	EndoflineresistanceBBUSnetwork120ohms4W	6.1					
Res4	FJB	563593	EndoflineresistanceBBUS1	6.1					
Res5	LH_Console	563590	EndoflineresistanceDBUSnetwork120ohms4W	17.1					
Res6	FJB	563593	EndoflineresistanceDBUSnetwork120ohms4W	6.2					
Res7	FJB	563593	EndoflineresistanceDBUSnetwork120ohms4W	6.2					
Res8	Parcel_Rack_LH	563205	PullDownPrackFan	18.3					
Res9	Dash	*opt*	PullDownResistor	18.1					
Res10		*opt*	PullDownResistor	18.1					
Res11	RJB	563205	PullDownRes	4.2					
Res12	Dashboard	562498	ReduceMirrorSpeedResistor	31.1					
Res13	Dashboard	562498	ReduceMirrorSpeedResistor	31.1					
Res14	RJB	563205	Evaporatorfans620ohms2W	18.2					
Res15	Engine_Cmpt	563587	EndoflineresistanceFlamedetec.device10kohms	38.1					
Res16	FJB	563593	*opt*	6.1					
Res17	FJB	563593	*opt*	6.1					
Res21	RJB	563205	RJBcompartementlights620ohms2W	25.1					
Res22	RJB	563205	Luggagecmpt.lighting620ohms2W	25.1					
Res23		564797	*opt*	26.1					
Res24		564797	*opt*	26.1					
Res25		564797	*opt*	26.1					
Res26		564797	*opt*	26.1					
Res31	Cmpt_fuel_tank	41123	Ureatankheatingelement(Heatedhose)	14.2					
Res32	Cmpt_fuel_tank	41123	Ureatankheatingelement(Heatedhose)	14.2					
Res44	FJB	563590	VDS_CAN	46.0					
Res53	FJB	563593	EndoflineresistanceDBUSnetwork120ohms4W	6.2					
Res99	Dashboard	563593	CANNetwork	42.4					
Res6A:1				200.7					
Res6A:2				200.7					
Res6B:1				200.7					
Res6B:2				200.7					

RELAYS LIST

No	Location	Part #	Function	Page					
R1	RJB	560843	MasterRelay	3.1					
R3	RJB	563348	12vIgnition&Accessories	3.1					
R4	FJB	563332	Cutoffwaterpreheater	38.1					
R6	Front_Service_Panel	563269	EntDoorOpenRly	29.1					
R7	Front_Service_Panel	563269	EntDoorCloseRly	29.1					
R8	Front_Service_Panel	563269	Spare	4.3					
R9	Front_Service_Panel	563269	Spare	4.3					
R10	Front_Service_Panel	563269	Spare	4.3					
R12	Evap_cmpt.	563348	Evaporator	18.2					
R16	RJB	563332	MaxTempRly	17.1					
R20	RJB	563332	WaterPump	17.1					
R21	FJB	560493	IgnitionRelay	3.2					
R22	FJB_VECF	563269	EcuIgnition	4.1					
R23	FJB_VECF	563269	Shutdown	4.1					
R24	FJB_VECF	563269	EcuIShift	4.1					
R25	FJB_VECF	563269	24VIgnition	4.2					
R26	Evap_Cmpt	563332	Pre-Heat	18.2					
R29	RJB	563348	PreheaterVolvo	14.1					
R30	RJB	563269	12vEnginerunning	4.1					
R31	RJB	563332	12vIgnition	4.1					
R34	RJB	564218	12vRrEngineEcu	3.2					
R35	RJB	564218	24VRrVECUPwr	3.2					
R36	RJB	563269	FireExtinguisher	9.1					
R37	RJB	563269	Electrichorn	9.1					
R38	RJB	563269	USB/Outlet	30.2					
R40	RJB	563332	TransmissionIShift	15.2					
R45	RJB	564774	RlyChargerConnected	40.1					
R47	WCLPump	563332	WCLDoorOpenOption	36.1					
R52	RJB_VECT	563270	Clearancelights&sidemarkers	26.4					
R53	RJB_VECT	563270	Flashersleftside	26.4					
R54	RJB_VECT	563270	Brakelights	26.4					
R55	RJB_VECT	563270	Flashersrightside	26.4					
R56	RJB_VECT	563270	Tail&licencelights	26.4					
R210	Parcel_Rack_LH	560493	24vRelayLatching	5.2					
R300	Parcel_Rack_LH_1st_Cmpt	563332	BackUpCam	28.1					
R_12VISS	Parcel_Rack_LH_1st_Cmpt	563332	SoundSystem	35.6					
R_Starter	RJB	564095	StarterRelayControl	3.2					
R23A	RJB	563332	12VIgnition	4.1					

RELAYS LIST

No	Location	Part #	Function	Page					
R1	RJB	560843	MasterRelay	3.1					
R3	RJB	563348	12vIgnition&Accessories	3.1					
R4	FJB	563332	Cutoffwaterpreheater	38.1					
R6	Front_Service_Panel	563269	EntDoorOpenRly	29.1					
R7	Front_Service_Panel	563269	EntDoorCloseRly	29.1					
R8	Front_Service_Panel	563269	Spare	4.3					
R9	Front_Service_Panel	563269	Spare	4.3					
R10	Front_Service_Panel	563269	Spare	4.3					
R12	Evap_cmpt.	563348	Evaporator	18.2					
R16	RJB	563332	MaxTempRly	17.1					
R20	RJB	563332	WaterPump	17.1					
R21		560493	IgnitionRelay	3.2					
R22	FJB_VECF	563269	EcuIgnition	4.1					
R23	FJB_VECF	563269	Shutdown	4.1					
R24	FJB_VECF	563269	EcuIShift	4.1					
R25	FJB_VECF	563269	24VIgnition	4.2					
R26	Evap_Cmpt	563332	Pre-Heat	18.2					
R29	RJB	563348	PreheaterVolvo	14.1					
R30	RJB	563269	12vEnginerunning	4.1					
R31	RJB	563332	12vIgnition	4.1					
R34	RJB	564218	12vRrEngineEcu	3.2					
R35	RJB	564218	24VRrVECUPwr	3.2					
R36	RJB	563269	FireExtinguisher	9.1					
R37	RJB	563269	Electrichorn	9.1					
R38	RJB	563269	USB/Outlet	30.2					
R40	RJB	563332	TransmissionIShift	15.2					
R45		564774	RlyChargerConnected	40.1					
R47	WCLPump	563332	WCLDoorOpenOption	36.1					
R51	VECT	563270	BackuplightsRly	26.4					
R52	RJB_VECT	563270	Clearancelights&sidemarkers	26.4					
R53	RJB_VECT	563270	Flashersleftside	26.4					
R54	RJB_VECT	563270	Brakelights	26.4					
R55	RJB_VECT	563270	Flashersrightside	26.4					
R56	RJB_VECT	563270	Tail&licencelights	26.4					
R210	Parcel_Rack_LH	560493	24vRelayLatching	5.2					
R300	Parcel_Rack_LH_1st_Cmpt	563332	BackUpCam	28.1					
R_12VISS	Parcel_Rack_LH_1st_Cmpt	563332	SoundSystem	35.6					
R_Starter	RJB	564095	StarterRelayControl	3.2					
R23A	RJB	563332	12VIgnition	4.1					
R5B	RJB	563332	*opt*	17.1					
RadioVolvo1_1142		23000462	Radio	60.4					
RadioVolvo6_1288		23000462	KVHTrackVision	60.4					
RadioVolvo7_1288		23000462	KVHTrackVision	60.4					

FUSES LIST

No	Location	Part #	Function	Rating	Page
F4	FuseBoxFJB	563280	TransIShift	5amp	4.2
F10	FuseBoxFJB	563280	Networks	Cluster	lights
F11	FuseBoxFJB	563282	Horn	20amp	4.1
F12	FuseBoxFJB	563284	Spare	15amp	4.1
F13	FuseBoxFJB	563284	12VDCustomer	15amp	4.1
F14	FuseBoxFJB	563135	Spare	30amp	4.1
F15	FuseBoxFJB	563280	VLink_Gateway	5amp	4.1
F16	FuseBoxFJB	563284	12VEng.run	15amp	4.1
F17	FuseBoxFJB	563165	Multiplexpower	30amp	4.1
F18	FuseBoxFJB	563165	Multiplexpower	30amp	4.1
F19	FuseBoxFJB	563165	Multiplexpower	30amp	4.1
F20	FuseBoxFJB	563280	Multiplexpower	5amp	4.1
F21	FuseBoxFJB	563165	Multiplexpower	30amp	4.1
F22	FuseBoxFJB	563280	ELD	5amp	4.1
F23	FuseBoxFJB	563165	ESP	30amp	4.1
F24	FuseBoxFJB	563284	12VIgn	15amp	4.1
F25	FuseBoxFJB	563284	12Voutlets	15amp	4.1
F26	FuseBoxFJB	563284	Spare	15amp	4.1
F27	FuseBoxFJB	563165	Spare	30amp	4.1
F29	FuseBoxFJB	563283	Networks	10amp	4.1
F30	FuseBoxFJB	563280	Networks	5amp	4.1
F33	FuseBoxFJB	563280	Multiplexpower	5amp	4.2
F34	FuseBoxFJB	563280	Multiplexpower	5amp	4.2
F35	FuseBoxFJB	563280	Multiplexpower	5amp	4.2
F36	FuseBoxFJB	563280	Startswitch	5amp	4.2
F37	FuseBoxFJB	563280	Haz/ExtDoorSw	5amp	4.2
F39	FuseBoxFJB	563284	24VD	15amp	4.2
F40	FuseBoxFJB	563284	Firesuppression	15amp	4.2
F41	FuseBoxFJB	563280	Spare	5amp	4.2
F42	FuseBoxFJB	563283	TransmissionIShift	10amp	4.1
F43	FuseBoxFJB	563282	TransmissionIShift	20amp	4.1
F44	FuseBoxFJB	563165	Multiplexpower	30amp	4.2
F45	FuseBoxFJB	563165	Multiplexpower	30amp	4.2
F46	FuseBoxFJB	563280	Multiplexpower	5amp	4.2
F47	FuseBoxFJB	563280	Multiplexpower	5amp	4.2
F50	FuseBoxFJB	563165	HVACdefroster	30amp	4.2
F51	FuseBoxFJB	563280	Destinationsigns	5amp	4.2
F52	FuseBoxFJB	563280	FMSGW	5amp	4.2
F53	FuseBoxFJB	563283	Clock&VSS	10amp	4.2
F54	FuseBoxFJB	563283	ElectronicMirror	10amp	4.2
F55	FuseBoxFJB	563283	B-UpCam	10amp	4.2
F56	FuseBoxFJB	563284	Spare	15amp	4.2
F57	FuseBoxFJB	563283	Spare	10amp	4.2

FUSES LIST

No	Location	Part #	Function	Rating	Page
F58	FuseBoxFJB	563284	Spare	15amp	4.2
F73	FuseBoxRJB	563283	EngineECUVolvo	20amp	5.1
F90	FuseBoxRJB	563282	Ureasystem	20amp	5.1
F91	FuseBoxRJB	563282	EngineECUVolvo	20amp	5.1
F95	FuseBoxFJB	563280	FMSGWIGN	5amp	4.2
F96	FuseBoxRJB	563280	*opt*	5amp	5.1
F99	FuseBoxRJB	563165	EngineECUVolvo	30amp	5.1
F100	FuseBoxRJB	563283	EngineECUVolvo	10amp	5.1
F101	FuseBoxRJB	564520	PowerforMasterrelay	300Amp	3.1
F105	FuseBoxRJB	563282	Spare	20amp	5.1
F106	FuseBoxRJB	563153	Multiplexpower	30amp	5.1
F107	FuseBoxRJB	563153	Multiplexpower	30amp	5.1
F108	FuseBoxRJB	563280	Networks	5amp	5.1
F109	FuseBoxRJB	563280	Engine&RJBcmpt.lights	5amp	5.1
F110	FuseBoxRJB	563283	TransmissionAlisson	10amp	5.1
F112	FuseBoxRJB	563165	Trailer	30amp	5.1
F113	FuseBoxRJB	563283	Spare	10amp	5.1
F114	FuseBoxRJB	563284	Spare	15amp	5.1
F115	FuseBoxRJB	563283	Spare	10amp	5.1
F116	FuseBoxRJB	563284	Spare	15amp	5.1
F117	FuseBoxRJB	563283	Spare	10amp	5.1
F118	FuseBoxRJB	563284	Spare	15amp	5.1
F119	FuseBoxRJB	563283	Spare	10amp	5.1
F120	FuseBoxRJB	563284	Spare	15amp	5.1
F121	FuseBoxRJB	563284	Powerforcustomer	15amp	5.1
F122	FuseBoxRJB	563283	Equalizer	10amp	5.1
F123	FuseBoxRJB	563153	Pre-heat	25amp	5.1
F124	FuseBoxRJB	563153	Pre-heat	25amp	5.1
F126	FuseBoxRJB	563280	EngineECU&HVAC	5amp	5.1
F127	FuseBoxRJB	563284	Pre-heat	15amp	5.1
F129	FuseBoxRJB	563284	Spare	15amp	5.1
F130	FuseBoxRJB	563284	Spare	15amp	5.1
F131	FuseBoxRJB	563280	Powerforcustomer	5amp	5.1
F132	FuseBoxRJB	563280	A57Pwr	5amp	5.1
F133	FuseBoxRJB	563165	A49Pwr	30amp	5.1
F134	FuseBoxRJB	563165	A52Pwr	30amp	5.1
F135	FuseBoxRJB	563165	A54Pwr	30amp	5.1
F136	FuseBoxRJB	563165	A53Pwr	30amp	5.1
F137	FuseBoxRJB	563280	Spare	5amp	5.1
F138	FuseBoxRJB	563280	Readinglamps&chime	5amp	5.1
F139	FuseBoxRJB	563283	Alternators	10amp	5.1
F140	FuseBoxRJB	563283	Spare	10amp	5.1
F141	FuseBoxRJB	563284	CondMo7	20amp	5.1

FUSES LIST

No	Location	Part #	Function	Rating	Page
F142	FuseBoxRJB	563284	CondMo8	20amp	5.1
F143	FuseBoxRJB	563284	CondMo27	20amp	5.1
F144	FuseBoxRJB	563284	CondMo28	20amp	5.1
F145	FuseBoxRJB	563153	P.Rack_Fan	25amp	5.1
F146	FuseBoxRJB	563283	Spare	10amp	5.1
F147	FuseBoxRJB	563284	24WUPCust	15amp	5.1
F148	FuseBoxRJB	563165	12VSoundSyst	30amp	5.1
F149	FuseBoxRJB	563282	UreaSystem	20amp	5.1
F150	FuseBoxRJB	563283	SpareVECR	10amp	5.1
F151	FuseBoxRJB	563284	Spare	15amp	5.1
F152	FuseBoxRJB	563283	Spare	10amp	5.1
F156	RJB	560893	UNICAN	3Amp	200.7
F157	Evap_Cmpt	560553	Plasma	5amp	60.1
F199	RJB	564520	Electricfansdrive	300A	13.1
F200	Parcel_Rack_LH_1st_Cmpt_	563284	VSSHDMI	15Amp	35.6
F201	Parcel_Rack_LH_1st_Cmpt_	563284	VSSHDMI	15Amp	35.6
F202	Parcel_Rack_LH_1st_Cmpt_	563284	VSSHDMI	15Amp	35.6
F203	Parcel_Rack_LH_1st_Cmpt_	563282	VSSHDMI	20Amp	35.6
F209	RJB	564174	Enginepre-heaterpower	150A	14.1
F243	RJB	560893	24VwhileEvap.relaypowered	3Amp	18.2
F300	Dashboard	563280	RearCameraRly	5amp	28.1
F301	VECT	563284	VECTTrailerinterface	15amp	26.4
F302	VECT	563284	VECTTrailerinterface	15amp	26.4
F303	VECT	563284	VECTTrailerinterface	15amp	26.4
F304	VECT	563284	VECTTrailerinterface	15amp	26.4
F305	VECT	563284	VECTTrailerinterface	15amp	26.4
F306	VECT	563284	VECTTrailerinterface	15amp	26.4
F307	VECT	563284	VECTTrailerinterface	15amp	26.4

FUSES LIST

No	Location	Part #	Function	Rating	Page
F4	FuseBoxFJB	563280	TransIShift	5amp	4.2
F10	FuseBoxFJB	563280	Networks	Cluster	lights
F11	FuseBoxFJB	563282	Horn	20amp	4.1
F12	FuseBoxFJB	563284	Spare	15amp	4.1
F13	FuseBoxFJB	563284	12VDCustomer	15amp	4.1
F14	FuseBoxFJB	563135	Spare	30amp	4.1
F15	FuseBoxFJB	563280	VLink_Gateway	5amp	4.1
F16	FuseBoxFJB	563284	12VEng.run	15amp	4.1
F17	FuseBoxFJB	563165	Multiplexpower	30amp	4.1
F18	FuseBoxFJB	563165	Multiplexpower	30amp	4.1
F19	FuseBoxFJB	563165	Multiplexpower	30amp	4.1
F20	FuseBoxFJB	563280	Multiplexpower	5amp	4.1
F21	FuseBoxFJB	563165	Multiplexpower	30amp	4.1
F22	FuseBoxFJB	563280	ELD	5amp	4.1
F23	FuseBoxFJB	563165	ESP	30amp	4.1
F24	FuseBoxFJB	563284	12VIgn	15amp	4.1
F25	FuseBoxFJB	563284	12Voutlets	15amp	4.1
F26	FuseBoxFJB	563284	Spare	15amp	4.1
F27	FuseBoxFJB	563165	Spare	30amp	4.1
F29	FuseBoxFJB	563283	Networks	10amp	4.1
F30	FuseBoxFJB	563280	Networks	5amp	4.1
F33	FuseBoxFJB	563280	Multiplexpower	5amp	4.2
F34	FuseBoxFJB	563280	Multiplexpower	5amp	4.2
F35	FuseBoxFJB	563280	Multiplexpower	5amp	4.2
F36	FuseBoxFJB	563280	Startswitch	5amp	4.2
F37	FuseBoxFJB	563280	Haz/ExtDoorSw	5amp	4.2
F39	FuseBoxFJB	563284	24VD	15amp	4.2
F40	FuseBoxFJB	563284	Firesuppression	15amp	4.2
F41	FuseBoxFJB	563280	Spare	5amp	4.2
F42	FuseBoxFJB	563283	TransmissionIShift	10amp	4.1
F43	FuseBoxFJB	563282	TransmissionIShift	20amp	4.1
F44	FuseBoxFJB	563165	Multiplexpower	30amp	4.2
F45	FuseBoxFJB	563165	Multiplexpower	30amp	4.2
F46	FuseBoxFJB	563280	Multiplexpower	5amp	4.2
F47	FuseBoxFJB	563280	Multiplexpower	5amp	4.2
F50	FuseBoxFJB	563165	HVACdefroster	30amp	4.2
F51	FuseBoxFJB	563280	Destinationsigns	5amp	4.2
F52	FuseBoxFJB	563280	FMSGW	5amp	4.2
F53	FuseBoxFJB	563283	Clock&VSS	10amp	4.2
F54	FuseBoxFJB	563283	ElectronicMirror	10amp	4.2
F55	FuseBoxFJB	563283	B-UpCam	10amp	4.2
F56	FuseBoxFJB	563284	Spare	15amp	4.2
F57	FuseBoxFJB	563283	Spare	10amp	4.2

FUSES LIST

No	Location	Part #	Function	Rating	Page
F58	FuseBoxFJB	563284	Spare	15amp	4.2
F73	FuseBoxRJB	563283	EngineECUVolvo	20amp	5.1
F90	FuseBoxRJB	563282	Ureasystem	20amp	5.1
F91	FuseBoxRJB	563282	EngineECUVolvo	20amp	5.1
F95	FuseBoxFJB	563280	FMSGWIGN	5amp	4.2
F96	FuseBoxRJB	563280	*opt*	5amp	5.1
F99	FuseBoxRJB	563165	EngineECUVolvo	30amp	5.1
F100	FuseBoxRJB	563283	EngineECUVolvo	10amp	5.1
F101	FuseBoxRJB	564520	PowerforMasterrelay	300Amp	3.1
F105	FuseBoxRJB	563282	Spare	20amp	5.1
F106	FuseBoxRJB	563153	Multiplexpower	30amp	5.1
F107	FuseBoxRJB	563153	Multiplexpower	30amp	5.1
F108	FuseBoxRJB	563280	Networks	5amp	5.1
F109	FuseBoxRJB	563280	Engine&RJBcmpt.lights	5amp	5.1
F110	FuseBoxRJB	563283	TransmissionAlisson	10amp	5.1
F112	FuseBoxRJB	563165	Trailer	30amp	5.1
F113	FuseBoxRJB	563283	Spare	10amp	5.1
F114	FuseBoxRJB	563284	Spare	15amp	5.1
F115	FuseBoxRJB	563283	Spare	10amp	5.1
F116	FuseBoxRJB	563284	Spare	15amp	5.1
F117	FuseBoxRJB	563283	Spare	10amp	5.1
F118	FuseBoxRJB	563284	Spare	15amp	5.1
F119	FuseBoxRJB	563283	Spare	10amp	5.1
F120	FuseBoxRJB	563284	Spare	15amp	5.1
F121	FuseBoxRJB	563284	Powerforcustomer	15amp	5.1
F122	FuseBoxRJB	563283	Equalizer	10amp	5.1
F123	FuseBoxRJB	563153	Pre-heat	25amp	5.1
F124	FuseBoxRJB	563153	Pre-heat	25amp	5.1
F126	FuseBoxRJB	563280	EngineECU&HVAC	5amp	5.1
F127	FuseBoxRJB	563284	Pre-heat	15amp	5.1
F129	FuseBoxRJB	563284	Spare	15amp	5.1
F130	FuseBoxRJB	563153	P.Rack Fan	25amp	5.1
F131	FuseBoxRJB	563280	Powerforcustomer	5amp	5.1
F132	FuseBoxRJB	563280	A57Pwr	5amp	5.1
F133	FuseBoxRJB	563165	A49Pwr	30amp	5.1
F134	FuseBoxRJB	563165	A52Pwr	30amp	5.1
F135	FuseBoxRJB	563165	A54Pwr	30amp	5.1
F136	FuseBoxRJB	563165	A53Pwr	30amp	5.1
F137	FuseBoxRJB	563280	Spare	5amp	5.1
F138	FuseBoxRJB	563280	Readinglamps&chime	5amp	5.1
F139	FuseBoxRJB	563283	Alternators	10amp	5.1
F140	FuseBoxRJB	563283	Spare	10amp	5.1
F141	FuseBoxRJB	563153	CondMo7	25amp	5.1

FUSES LIST

No	Location	Part #	Function	Rating	Page
F142	FuseBoxRJB	563153	CondMo8	25amp	5.1
F143	FuseBoxRJB	563153	CondMo27	25amp	5.1
F144	FuseBoxRJB	563153	CondMo28	25amp	5.1
F145	FuseBoxRJB	563153	Spare	25amp	5.1
F146	FuseBoxRJB	563283	Spare	10amp	5.1
F147	FuseBoxRJB	563284	24WUPCust	15amp	5.1
F148	FuseBoxRJB	563165	12VSoundSyst	30amp	5.1
F149	FuseBoxRJB	563282	UreaSystem	20amp	5.1
F150	FuseBoxRJB	563283	SpareVECR	10amp	5.1
F151	FuseBoxRJB	563284	Spare	15amp	5.1
F152	FuseBoxRJB	563283	Spare	10amp	5.1
F156	RJB	560893	UNICAN	3Amp	200.7
F157	Evap_Cmpt	560553	Plasma	5amp	60.1
F199	RJB	564520	Electricfansdrive	300A	13.1
F200	Parcel_Rack_LH_1st_Cmpt_	563284	VSSHDMI	15Amp	35.6
F201	Parcel_Rack_LH_1st_Cmpt_	563284	VSSHDMI	15Amp	35.6
F202	Parcel_Rack_LH_1st_Cmpt_	563284	VSSHDMI	15Amp	35.6
F203	Parcel_Rack_LH_1st_Cmpt_	563282	VSSHDMI	20Amp	35.6
F209	RJB	564174	Enginepre-heaterpower	150A	14.1
F243	RJB	560893	24VwhileEvap.relaypowered	3Amp	18.2
F300	Dashboard	563280	RearCameraRly	5amp	28.1
F301	VECT	563284	VECTTrailerinterface	15amp	26.4
F302	VECT	563284	VECTTrailerinterface	15amp	26.4
F303	VECT	563284	VECTTrailerinterface	15amp	26.4
F304	VECT	563284	VECTTrailerinterface	15amp	26.4
F305	VECT	563284	VECTTrailerinterface	15amp	26.4
F306	VECT	563284	VECTTrailerinterface	15amp	26.4
F307	VECT	563284	VECTTrailerinterface	15amp	26.4

FUSES LIST

No	Location	Part #	Function	Rating	Page
F4	FuseBoxFJB	563280	TransIShift	5amp	4.2
F10	FuseBoxFJB	563280	Networks	Cluster	lights
F11	FuseBoxFJB	563282	Horn	20amp	4.1
F12	FuseBoxFJB	563284	Spare	15amp	4.1
F13	FuseBoxFJB	563284	12VDCustomer	15amp	4.1
F14	FuseBoxFJB	563135	Spare	30amp	4.1
F15	FuseBoxFJB	563280	VLink_Gateway	5amp	4.1
F16	FuseBoxFJB	563284	12VEng.run	15amp	4.1
F17	FuseBoxFJB	563165	Multiplexpower	30amp	4.1
F18	FuseBoxFJB	563165	Multiplexpower	30amp	4.1
F19	FuseBoxFJB	563165	Multiplexpower	30amp	4.1
F20	FuseBoxFJB	563280	Multiplexpower	5amp	4.1
F21	FuseBoxFJB	563165	Multiplexpower	30amp	4.1
F22	FuseBoxFJB	563280	ELD	5amp	4.1
F23	FuseBoxFJB	563165	ESP	30amp	4.1
F24	FuseBoxFJB	563284	12VIgn	15amp	4.1
F25	FuseBoxFJB	563284	12Voutlets	15amp	4.1
F26	FuseBoxFJB	563284	Spare	15amp	4.1
F27	FuseBoxFJB	563165	Spare	30amp	4.1
F29	FuseBoxFJB	563283	Networks	10amp	4.1
F30	FuseBoxFJB	563280	Networks	5amp	4.1
F33	FuseBoxFJB	563280	Multiplexpower	5amp	4.2
F34	FuseBoxFJB	563280	Multiplexpower	5amp	4.2
F35	FuseBoxFJB	563280	Multiplexpower	5amp	4.2
F36	FuseBoxFJB	563280	Startswitch	5amp	4.2
F37	FuseBoxFJB	563280	Haz/ExtDoorSw	5amp	4.2
F39	FuseBoxFJB	563284	24VD	15amp	4.2
F40	FuseBoxFJB	563284	Firesuppression	15amp	4.2
F41	FuseBoxFJB	563280	Spare	5amp	4.2
F42	FuseBoxFJB	563283	TransmissionIShift	10amp	4.1
F43	FuseBoxFJB	563282	TransmissionIShift	20amp	4.1
F44	FuseBoxFJB	563165	Multiplexpower	30amp	4.2
F45	FuseBoxFJB	563165	Multiplexpower	30amp	4.2
F46	FuseBoxFJB	563280	Multiplexpower	5amp	4.2
F47	FuseBoxFJB	563280	Multiplexpower	5amp	4.2
F50	FuseBoxFJB	563165	HVACdefroster	30amp	4.2
F51	FuseBoxFJB	563280	Destinationsigns	5amp	4.2
F52	FuseBoxFJB	563280	FMSGW	5amp	4.2
F53	FuseBoxFJB	563283	Clock&VSS	10amp	4.2
F54	FuseBoxFJB	563283	ElectronicMirror	10amp	4.2
F55	FuseBoxFJB	563283	B-UpCam	10amp	4.2
F56	FuseBoxFJB	563284	Spare	15amp	4.2
F57	FuseBoxFJB	563283	Spare	10amp	4.2

FUSES LIST

No	Location	Part #	Function	Rating	Page
F58	FuseBoxFJB	563284	Spare	15amp	4.2
F73	FuseBoxRJB	563283	EngineECUVolvo	20amp	5.1
F90	FuseBoxRJB	563282	Ureasystem	20amp	5.1
F91	FuseBoxRJB	563282	EngineECUVolvo	20amp	5.1
F95	FuseBoxFJB	563280	FMSGWIGN	5amp	4.2
F96	FuseBoxRJB	563280	*opt*	5amp	5.1
F99	FuseBoxRJB	563165	EngineECUVolvo	30amp	5.1
F100	FuseBoxRJB	563283	EngineECUVolvo	10amp	5.1
F101	FuseBoxRJB	564520	PowerforMasterrelay	300Amp	3.1
F105	FuseBoxRJB	563282	Spare	20amp	5.1
F106	FuseBoxRJB	563153	Multiplexpower	30amp	5.1
F107	FuseBoxRJB	563153	Multiplexpower	30amp	5.1
F108	FuseBoxRJB	563280	Networks	5amp	5.1
F109	FuseBoxRJB	563280	Engine&RJBcmpt.lights	5amp	5.1
F110	FuseBoxRJB	563283	TransmissionAlisson	10amp	5.1
F112	FuseBoxRJB	563165	Trailer	30amp	5.1
F113	FuseBoxRJB	563283	Spare	10amp	5.1
F114	FuseBoxRJB	563284	Spare	15amp	5.1
F115	FuseBoxRJB	563283	Spare	10amp	5.1
F116	FuseBoxRJB	563284	Spare	15amp	5.1
F117	FuseBoxRJB	563283	Spare	10amp	5.1
F118	FuseBoxRJB	563284	Spare	15amp	5.1
F119	FuseBoxRJB	563283	Spare	10amp	5.1
F120	FuseBoxRJB	563284	Spare	15amp	5.1
F121	FuseBoxRJB	563284	Powerforcustomer	15amp	5.1
F122	FuseBoxRJB	563283	Equalizer	10amp	5.1
F123	FuseBoxRJB	563153	Spare	25amp	5.1
F124	FuseBoxRJB	563153	Spare	25amp	5.1
F126	FuseBoxRJB	563280	EngineECU&HVAC	5amp	5.1
F127	FuseBoxRJB	563284	Spare	15amp	5.1
F129	FuseBoxRJB	563284	Spare	15amp	5.1
F130	FuseBoxRJB	563153	P.Rack Fan	25amp	5.1
F131	FuseBoxRJB	563280	Powerforcustomer	5amp	5.1
F132	FuseBoxRJB	563280	A57Pwr	5amp	5.1
F133	FuseBoxRJB	563165	A49Pwr	30amp	5.1
F134	FuseBoxRJB	563165	A52Pwr	30amp	5.1
F135	FuseBoxRJB	563165	A54Pwr	30amp	5.1
F136	FuseBoxRJB	563165	A53Pwr	30amp	5.1
F137	FuseBoxRJB	563280	Spare	5amp	5.1
F138	FuseBoxRJB	563280	Readinglamps&chime	5amp	5.1
F139	FuseBoxRJB	563283	Alternators	10amp	5.1
F140	FuseBoxRJB	563283	Spare	10amp	5.1
F141	FuseBoxRJB	563153	CondMo7	25amp	5.1

FUSES LIST

No	Location	Part #	Function	Rating	Page
F142	FuseBoxRJB	563153	CondMo8	25amp	5.1
F143	FuseBoxRJB	563153	CondMo27	25amp	5.1
F144	FuseBoxRJB	563153	CondMo28	25amp	5.1
F145	FuseBoxRJB	563153	Spare	25amp	5.1
F146	FuseBoxRJB	563283	Spare	10amp	5.1
F147	FuseBoxRJB	563284	24WUPCust	15amp	5.1
F148	FuseBoxRJB	563165	12VSoundSyst	30amp	5.1
F149	FuseBoxRJB	563282	UreaSystem	20amp	5.1
F150	FuseBoxRJB	563283	Pre-heat	25amp	5.1
F151	FuseBoxRJB	563284	Pre-heat	25amp	5.1
F152	FuseBoxRJB	563283	Pre-heat	15amp	5.1
F156	RJB	560893	UNICAN	3Amp	200.7
F157	Evap_Cmpt	560553	Plasma	5amp	60.1
F199	RJB	564520	Electricfansdrive	300A	13.1
F200	Parcel_Rack_LH_1st_Cmpt_	563284	VSSHDMI	15Amp	35.6
F201	Parcel_Rack_LH_1st_Cmpt_	563284	VSSHDMI	15Amp	35.6
F202	Parcel_Rack_LH_1st_Cmpt_	563284	VSSHDMI	15Amp	35.6
F203	Parcel_Rack_LH_1st_Cmpt_	563282	VSSHDMI	20Amp	35.6
F209	RJB	564174	Enginepre-heaterpower	150A	14.1
F243	RJB	560893	24VwhileEvap.relaypowered	3Amp	18.2
F300	Dashboard	563280	RearCameraRly	5amp	28.1
F301	VECT	563284	VECTTrailerinterface	15amp	26.4
F302	VECT	563284	VECTTrailerinterface	15amp	26.4
F303	VECT	563284	VECTTrailerinterface	15amp	26.4
F304	VECT	563284	VECTTrailerinterface	15amp	26.4
F305	VECT	563284	VECTTrailerinterface	15amp	26.4
F306	VECT	563284	VECTTrailerinterface	15amp	26.4
F307	VECT	563284	VECTTrailerinterface	15amp	26.4

FUSES LIST

No	Location	Part #	Function	Rating	Page
F4	FuseBoxFJB	563280	TransIShift	5amp	4.2
F10	FuseBoxFJB	563280	Networks,Cluster,lights	5amp	4.1
F11	FuseBoxFJB	563282	Horn	20amp	4.1
F12	FuseBoxFJB	563284	Spare	15amp	4.1
F13	FuseBoxFJB	563284	12VDCustomer	15amp	4.1
F14	FuseBoxFJB	563135	Spare	30amp	4.1
F15	FuseBoxFJB	563280	VLink_Gateway	5amp	4.1
F16	FuseBoxFJB	563284	12VEng.run	15amp	4.1
F17	FuseBoxFJB	563165	Multiplexpower	30amp	4.1
F18	FuseBoxFJB	563165	Multiplexpower	30amp	4.1
F19	FuseBoxFJB	563165	Multiplexpower	30amp	4.1
F20	FuseBoxFJB	563280	Multiplexpower	5amp	4.1
F21	FuseBoxFJB	563165	Multiplexpower	30amp	4.1
F22	FuseBoxFJB	563280	ELD	5amp	4.1
F23	FuseBoxFJB	563165	ESP	30amp	4.1
F24	FuseBoxFJB	563284	12VIgn	15amp	4.1
F25	FuseBoxFJB	563284	12Voutlets	15amp	4.1
F26	FuseBoxFJB	563284	Spare	15amp	4.1
F27	FuseBoxFJB	563165	Spare	30amp	4.1
F29	FuseBoxFJB	563283	Networks	10amp	4.1
F30	FuseBoxFJB	563280	Networks	5amp	4.1
F33	FuseBoxFJB	563280	Multiplexpower	5amp	4.2
F34	FuseBoxFJB	563280	Multiplexpower	5amp	4.2
F35	FuseBoxFJB	563280	Multiplexpower	5amp	4.2
F36	FuseBoxFJB	563280	Startswitch	5amp	4.2
F37	FuseBoxFJB	563280	Haz/ExtDoorSw	5amp	4.2
F39	FuseBoxFJB	563284	24VD	15amp	4.2
F40	FuseBoxFJB	563284	Firesuppression	15amp	4.2
F41	FuseBoxFJB	563280	Spare	5amp	4.2
F42	FuseBoxFJB	563283	Spare	10amp	4.1
F43	FuseBoxFJB	563282	Spare	20amp	4.1
F44	FuseBoxFJB	563165	Multiplexpower	30amp	4.2
F45	FuseBoxFJB	563165	Multiplexpower	30amp	4.2
F46	FuseBoxFJB	563280	Multiplexpower	5amp	4.2
F47	FuseBoxFJB	563280	Multiplexpower	5amp	4.2
F50	FuseBoxFJB	563165	HVACdefroster	30amp	4.2
F51	FuseBoxFJB	563280	Destinationsigns	5amp	4.2
F52	FuseBoxFJB	563280	FMSGW	5amp	4.2
F53	FuseBoxFJB	563283	Clock&VSS	10amp	4.2
F54	FuseBoxFJB	563283	ElectronicMirror	10amp	4.2
F55	FuseBoxFJB	563283	B-UpCam	10amp	4.2
F56	FuseBoxFJB	563284	Spare	15amp	4.2
F57	FuseBoxFJB	563283	Spare	10amp	4.2

FUSES LIST

No	Location	Part #	Function	Rating	Page
F58	FuseBoxFJB	563284	Spare	15amp	4.2
F73	FuseBoxRJB	563283	EngineECU	20amp	5.1
F74	RJB	562259	*opt*	5Amp	17.1
F90	FuseBoxRJB	563282	Ureasystem	20amp	5.1
F91	FuseBoxRJB	563282	EngineECU	20amp	5.1
F95	FuseBoxFJB	563280	FMSGWIGN	5amp	4.2
F96	VECUPwr	563280	*opt*	5amp	5.1
F99	FuseBoxRJB	563165	EngineECU	30amp	5.1
F100	FuseBoxRJB	563283	Spare	10amp	5.1
F101	FuseBoxRJB	564520	PowerforMasterrelay	300Amp	3.1
F105	FuseBoxRJB	563282	Spare	20amp	5.1
F106	FuseBoxRJB	563153	Multiplexpower	30amp	5.1
F107	FuseBoxRJB	563153	Multiplexpower	30amp	5.1
F108	FuseBoxRJB	563280	Networks	5amp	5.1
F109	FuseBoxRJB	563280	Eng.RJBcmpLight	5amp	5.1
F110	FuseBoxRJB	563283	TransmAlisson	10amp	5.1
F112	FuseBoxRJB	563165	Trailer	30amp	5.1
F113	FuseBoxRJB	563283	Spare	10amp	5.1
F114	FuseBoxRJB	563284	Spare	15amp	5.1
F115	FuseBoxRJB	563283	Spare	20amp	5.1
F116	FuseBoxRJB	563284	Spare	15amp	5.1
F117	FuseBoxRJB	563283	Spare	20amp	5.1
F118	FuseBoxRJB	563284	Spare	15amp	5.1
F119	FuseBoxRJB	563283	Spare	20amp	5.1
F120	FuseBoxRJB	563284	Spare	15amp	5.1
F121	FuseBoxRJB	563284	Powercustomer	15amp	5.1
F122	FuseBoxRJB	563283	Equalizer	10amp	5.1
F123	FuseBoxRJB	563153	Pre-heat	25amp	5.1
F124	FuseBoxRJB	563153	Pre-heat	25amp	5.1
F126	FuseBoxRJB	563280	Eng.ECU&HVAC	5amp	5.1
F127	FuseBoxRJB	563284	Pre-heat	15amp	5.1
F129	FuseBoxRJB	563284	Spare	15amp	5.1
F130	FuseBoxRJB	563153	P.RackFan	25amp	5.1
F131	FuseBoxRJB	563280	Powercustomer	5amp	5.1
F132	FuseBoxRJB	563280	A57Pwr	5amp	5.1
F133	FuseBoxRJB	563165	A53Pwr	30amp	5.1
F134	FuseBoxRJB	563165	A50Pwr	30amp	5.1
F135	FuseBoxRJB	563165	A54Pwr	30amp	5.1
F136	FuseBoxRJB	563165	A53Pwr	30amp	5.1
F137	FuseBoxRJB	563280	Pre-Heat	5amp	5.1
F138	FuseBoxRJB	563280	RJBCmptLt	5amp	5.1
F139	FuseBoxRJB	563283	Alternators	10amp	5.1
F140	FuseBoxRJB	563283	ReadingLamps	10amp	5.1

FUSES LIST

No	Location	Part #	Function	Rating	Page
F141	FuseBoxRJB	563153	Mo7Cond	25amp	5.1
F142	FuseBoxRJB	563153	Mo8Cond	25amp	5.1
F143	FuseBoxRJB	563153	Mo27Cond	25amp	5.1
F144	FuseBoxRJB	563153	Mo28Cond	25amp	5.1
F145	FuseBoxRJB	563153	Spare	25amp	5.1
F146	FuseBoxRJB	563283	Spare	10amp	5.1
F147	FuseBoxRJB	563284	24WUPCust	15amp	5.1
F148	FuseBoxRJB	563165	12VSoundSyst	30amp	5.1
F149	FuseBoxRJB	563282	UreaSystem	20amp	5.1
F150	FuseBoxRJB	563283	Spare	25amp	5.1
F151	FuseBoxRJB	563284	Spare	25amp	5.1
F152	FuseBoxRJB	563283	Spare	15amp	5.1
F156	RJB	560893	UNICAN	3Amp	200.7
F157		560553	FuseHolder560553		60.1
F199	RJB	564520	Electricfansdrive	300A	13.1
F200	Parcel_Rack_LH_1st_Cmpt_	563284	VSSHDMI	15Amp	35.6
F201	Parcel_Rack_LH_1st_Cmpt_	563284	VSSHDMI	15Amp	35.6
F202	Parcel_Rack_LH_1st_Cmpt_	563284	VSSHDMI	15Amp	35.6
F203	Parcel_Rack_LH_1st_Cmpt_	563282	VSSHDMI	20Amp	35.6
F209	RJB	564174	Enginepre-heaterpower	150A	14.1
F243	RJB	560893	24VwhileEvap.relaypowered	3Amp	18.2
F300	Dashboard	563280	RearCameraRly	5amp	28.1
F301	VECT	563284	VECTTrailerinterface	15amp	26.4
F302	VECT	563284	VECTTrailerinterface	15amp	26.4
F303	VECT	563284	VECTTrailerinterface	15amp	26.4
F304	VECT	563284	VECTTrailerinterface	15amp	26.4
F305	VECT	563284	VECTTrailerinterface	15amp	26.4
F306	VECT	563284	VECTTrailerinterface	15amp	26.4
F307	VECT	563284	VECTTrailerinterface	15amp	26.4
F612	LH_Parcel_Rack	560552	*opt*	3Amp	60.1
F614	LH_Parcel_Rack	560552	*opt*	3Amp	60.1

Wire identification chart

**Note that the identification comes from the uphill component.*

Wire identification exemple: 12 - A47J1.8 - 16

Voltage	Circuit number	Wire size
0		0000
5	***Ground circuits:***	000
0/12	Electronic = Use I/O module number followed by an "R" and pin number. (ex: A47RJ1.8, A54RJ2.14)	00
0/24	Electronic ground studs = Use number "00" followed with the stud location and sequential number. (ex:00R1,00F4)	0
12	Chassis = Use number "0" followed by the ground stud location and sequential number. (ex: 0EV1, 0FH2)	1
24		2
120	***Power and voltage carrying circuits:***	3
ANA	Power distribution = Use uphill component identification as circuit name. (ex: F96, CB22)	4
BBUS	Multiplex outputs = Use output module number and pin number as circuit name. (ex: A55J1.4, A49J2.9)	6
DATA	Relays, diodes, resistors and any other component outputs =	8
DBUS	Use component name and pin number as circuit name. (ex: Sw55.A, R30.87, D12.B)	10
J1587	***Networks:***	12
J1939	DL0 = Bbus mux DL7 = Engine subnet	14
J2284	DL1 = J1939 DL9 = Power train subnet	16
LIN	DL2 = J2284 900 / 901 = J1587	18
PWM	DL3 = Dbus mux	20
GND		22
...OTHER		24

Batteries and alternators

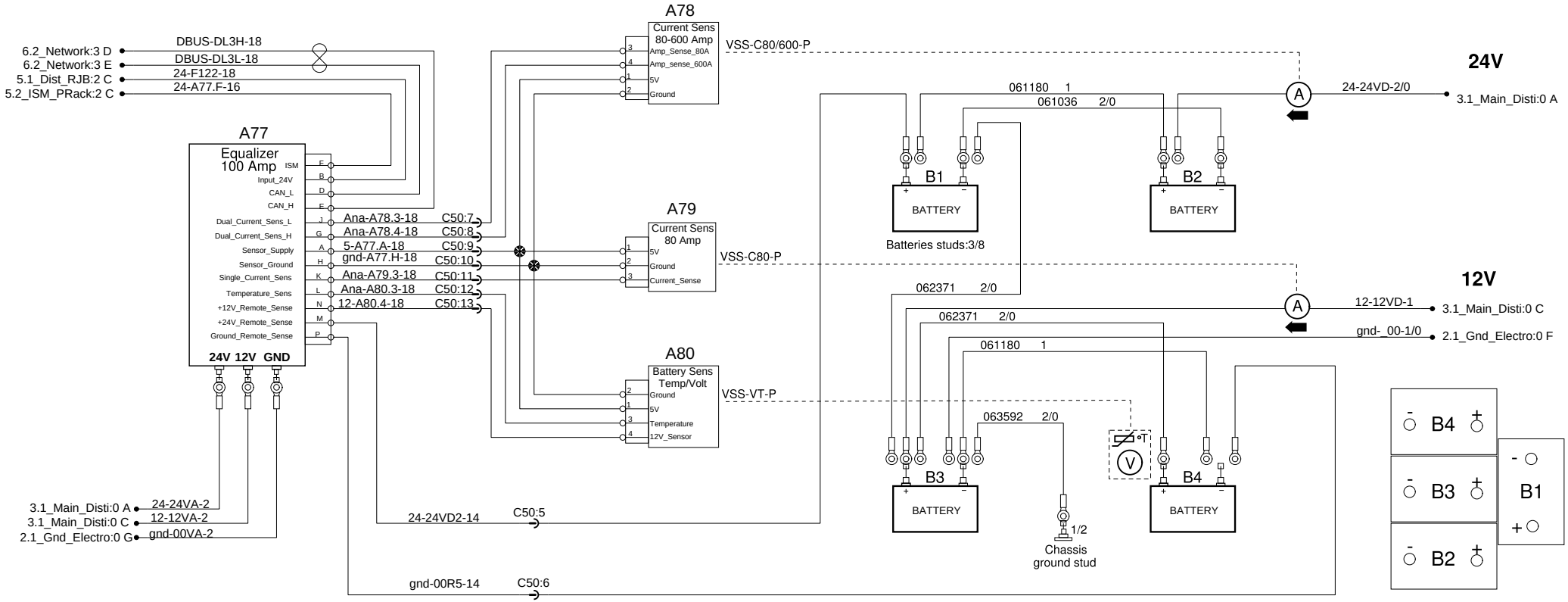

Alternators Bosch

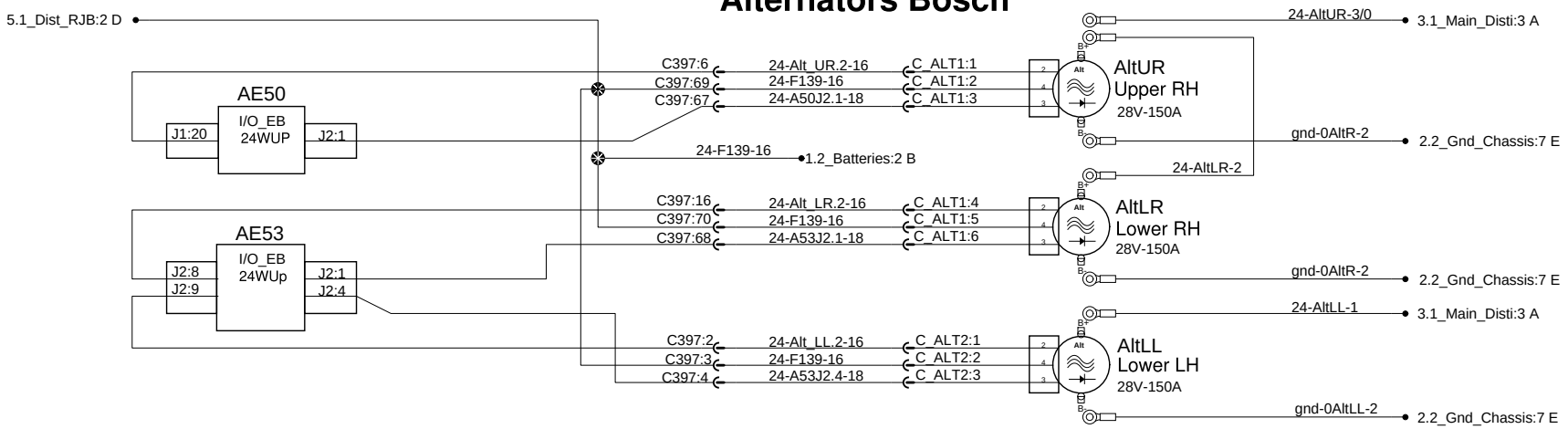

PREVOST®	WIRING DIAGRAM	No:D062140	Page:1.1	Rev:0

Alternators Remy

Mux Controlled

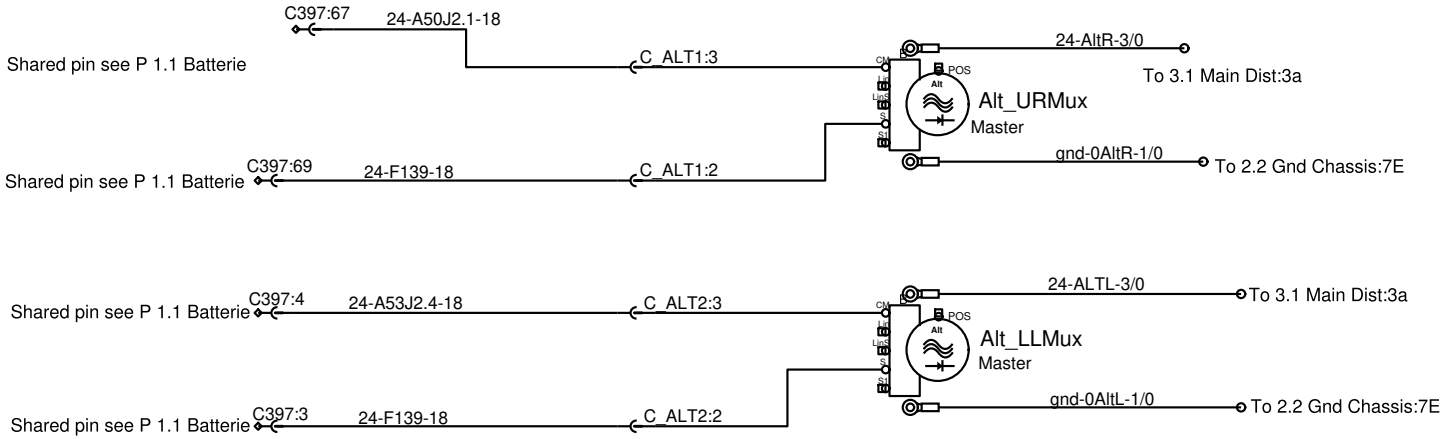

Lin Controlled

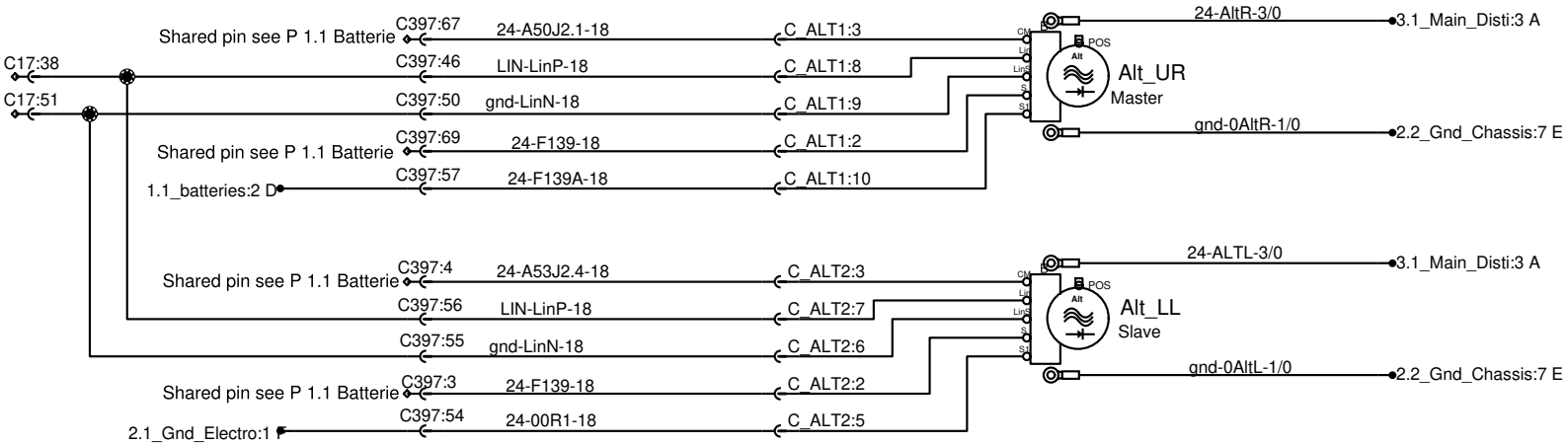

PREVOST®	WIRING DIAGRAM	No:D062140	Page:1.2	Rev:3

Electronic ground distribution

Ground distribution:
0-Electric gnd
00- Electronic Gnd

A-Dash - Lh console harness
F-Front junction box harness
FH-Front harness
R-Rear junction box harness
FR-Front to rear

Dash harness

gnd-00A-16 — 5.2_ISM_PRack:3 C
gnd-00A-16 — 23.1_Indirect_Lights:0 B
gnd-00A-16 — 60.0_Cust_Adapt_Dash_Interface:2 B
gnd-00A-16 — 31.2_ElectronicMirror:2 A
gnd-00A-18 — 33.1_Luggage_LockUnlock:1 B
gnd-00A-18 — 32.1_Kneeling:0 D
gnd-00A-18 — 16.1_ESP:0 A
gnd-00A-18 — 22.1_Reading_lamps:6 F
gnd-00A-18 — 29.1_Entrance_door:2 A
gnd-00A-18 — 22.1_Reading_lamps:4 F
gnd-00A-18 — 41.1_SunVisors:1 C
gnd-00A-18 — 19.1_Driver_Lights:1 E
gnd-00A-18 — 22.1_Reading_lamps:1 E
gnd-00A-18 — 18.3_Parcel_Rack_Vent:1 A
gnd-00A-18 — 16.1_ESP:0 A
gnd-00A-18 — 10.1_Cluster_ClkSpring_StalkBase:2 A
gnd-00A-18 — 14.1_Engine_Ecu:8 E
gnd-00A-18 — 32.1_Kneeling:0 C
gnd-00A-18 — 12.1_Brake:2 B
gnd-00A-18 — 36.1_WCL_Ricon:3 A
gnd-00A-18 — 28.2_Destination_Signs:1 B
gnd-00A-18 — 26.1_Front_Lighting:1 B
gnd-00A-18 — 26.5_Fog_Dock_Lts:1 C
gnd-00A-18 — 26.1_Front_Lighting:1 C
gnd-00A-18 — 6.2_Network:4 C
gnd-00A-18 — 3.2_Ign_Start:1 A
gnd-00A-18 — 18.5_Roof_Hatches_W_Fan:2 B
gnd-00A-18 — 45.0_Emergency_Lights:1 C
gnd-00A-14
gnd-00A-18 — 16.2_ACB_LDW:3 B
gnd-00A-18 — 32.1_Kneeling:1 A
gnd-00A-18
gnd-00A-18 — 31.1_Mirror:1 A
gnd-00A-18 — 30.1_Drivers_Window:1 B
gnd-00FH4-12 — 7.1_Mux_Power:2 A
gnd-00FH2-10 — 7.1_Mux_Power:2 C
gnd-00FH3-10 — 7.1_Mux_Power:2 B
gnd-00FH3-16 — 7.1_Mux_Power:4 A
gnd-00FH3-18 — 42.4_ELD_ITS_Gateway:5 C

Right Hand Console

gnd-00RHC-8

Front harness

gnd-00FH1-14 — C42:35
gnd-00FH-18 — 34.1_wiper_washer:0 B
gnd-00FH1-14 — 18.1_Defroster:2 B

FJB harness

FJB Electronic GND

gnd-00F1-12
gnd-00F1-18 — 12.1_Brake:2 D
gnd-00F1-12 — 7.1_Mux_Power:1 D
gnd-00F3-12 — 7.1_Mux_Power:1 C
gnd-00F2-12 — 7.1_Mux_Power:1 D
gnd-00F2-18 — 17.1_Pre_Heat:1 C
gnd-00F2-16 — 7.1_Mux_Power:0 B
gnd-00F2-18 — 12.2_Trailler_ParkBrake:2 B
gnd-00F-18 — 12.2_Trailler_ParkBrake:2 B
gnd-00F-18 — 14.1_Engine_Ecu:5 D
gnd-00F-18 — 15.2_Trans_IShift:3 C
gnd-00F-18 — 15.2_Trans_IShift:1 D
gnd-00F-14 — 16.1_ESP:1 B
gnd-00F-18 — 30.2_OutletAndUSB_Pwr:1 B
gnd-00F-18 — 4.1_Dist_12V_FJB:2 C
gnd-00F-12
gnd-00F-18 — 28.1_Dig_Clock_&_B-Up_Cam:2 B
gnd-00F-16 — 9.1_Horn:3 C
gnd-00F-18 — 37.2_ZF_Assisted_Steering:1 B
gnd-00F-18 — 38.1_Fire_Supp:0 C
gnd-00F-18 — 4.1_Dist_12V_FJB:4 A
gnd-00F-18 — 4.1_Dist_12V_FJB:4 B
gnd-00F-18 — 9.1_Horn:1 B
gnd-00FH4-12 — 7.1_Mux_Power:1 E

RJB harness

RJB Electronic GND

gnd-00FR-2/0

gnd-00R1-18 — 3.2_Ign_Start:1 C
gnd-00R1-18 — 3.1_Main_Disti:1 A
gnd-00R1-18 — 6.2_Network:1 B
gnd-00R1-18 — 11.1_Lavatory:1 B
gnd-00R1-14 — 15.2_Trans_IShift:2 A
gnd-00R1-14 — 15.1_Trans_Allison:0 A
gnd-00R1-14 — 17.1_Pre_Heat:3 E
gnd-00R1-16 — 38.1_Fire_Supp:2 C
gnd-00R1-18 — 12.1_Brake:2 C
gnd-00R1-18 — 14.1_Engine_Ecu:3 B
gnd-00R1-10
gnd-00R1-18 — 1.2_Batteries:3 E
gnd-00R2-8 — 7.1_Mux_Power:2 D
gnd-00R2-12 — C17:2
gnd-00R2-12 — 7.1_Mux_Power:2 C
gnd-00R3-12 — 7.1_Mux_Power:4 C
gnd-00R4-12 — 7.1_Mux_Power:4 D
gnd-00R4-12 — 7.1_Mux_Power:4 D
gnd-00R4-16 — 7.1_Mux_Power:4 B
C17:92
gnd-00R5-14 — 7.1_Mux_Power:4 E
gnd-00R5-14 — 14.2_Urea:1 B
gnd-00R5-8
gnd-00R5-12 — 14.1_Engine_Ecu:3 C
gnd-00R5-18 — 26.4_Trailer:1 D
gnd-00R5-18 — 40.1_Inverters_Charger:5 C
gnd-00VA-2 — 1.1_batteries:0 C
gnd-_00-1/0 — 1.1_batteries:3 C

Dash JB

AE55 (I/O_EA, 24WUP)
gnd-A55RJ1.6-18 — 31.2_ElectronicMirror:3 E
gnd-A55RJ1.18-18 — 16.2_ACB_LDW:4 C
26.1_Front_Lighting:5 A

AE56 (I/O_EA, 24WUP)

FJB

AE41 (I/O_EA, 24WUP)
gnd-A41RJ1.18-18 — 25.1_Cmpt_Lighting:1 E

AE42 (I/O_EA, 24WUP)
C110:13
gnd-A42RJ1.18-18 — 32.1_Kneeling:4 B, 32.1_Kneeling:1 E, 32.1_Kneeling:4 D
gnd-A42RJ2.14-18 — 32.1_Kneeling:1 B

AE43 (I/O_EB, 12WUP)
gnd-A43RJ1.17-18 — 39.1_TPMS:0 B, 16.2_ACB_LDW:2 D
gnd-A43RJ1.18-18 — 33.1_Luggage_LockUnlock:4 C
gnd-A43RJ2.2-18 — 37.1_VLink_ADryer:2 D

AE44 (I/O_EB, 24WUP)
gnd-A44RJ1.5-16 — 20.1_Aislelights:4 D
gnd-A44RJ1.17-18 — 26.1_Front_Lighting:5 E, 9.1_Horn:3 D
gnd-A44RJ2.2-18 — 19.1_Driver_Lights:3 A, 29.1_Entrance_door:5 D
gnd-A44RJ2.3-18 — 34.1_wiper_washer:4 B

AE45 (I/O_EB, 24WUP)
gnd-A45RJ1.17-18 — 25.1_Cmpt_Lighting:2 C
gnd-A45RJ1.18-18 — 32.1_Kneeling:4 E
gnd-A45RJ2.2-18 — 4.2_Dist_24V_FJB:3 E

AE46 (I/O_EB, 24WUp)
gnd-A46RJ1.6-14 — 21.1_SignatureLedStrip_Ligh

RH console JB

AE47 (I/O_EB, 24WUP)
gnd-A47RJ1.17-16 — 26.1_Front_Lighting:4 D
gnd-A47RJ2.2-14 — 26.5_Fog_Dock_Lts:3 B

AE48 (I/O_EB, 24WUp)
gnd-A48RJ1.6-18 — 18.1_Defroster:1 E, 18.1_Defroster:1 D
gnd-A48RJ1.17-18 — 18.1_Defroster:3 D
gnd-A48RJ1.18-18 — 29.1_Entrance_door:1 C
gnd-A48RJ2.2-18 — 29.1_Entrance_door:5 C
gnd-A48RJ2.3-18 — 29.2_EntranceStep_Lights:3 E
gnd-A48RJ2.14-18 — 18.1_Defroster:2 C
gnd-A48RJ2.14-18 — 29.1_Entrance_door:5 D

AE49 (I/O_EB, 24WUP)
gnd-A49RJ1.17-14 — 26.5_Fog_Dock_Lts:3 C
gnd-A49RJ2.2-16 — 26.1_Front_Lighting:4 B

Parcel Rack JB

AE58 (I/O_EB, 24WUp)
gnd-A58RJ1.5-18 — 26.6_Curb_Lights:3 C
gnd-A58RJ1.5-18 — 26.6_Curb_Lights:3 B
gnd-A58RJ1.6-16 — 18.5_Roof_Hatches_W_Fan:4 D
gnd-A58RJ1.17-16 — 11.1_Lavatory:4 B
gnd-A58RJ1.18-18 — 23.1_Indirect_Lights:1 E
gnd-A58RJ2.3-14 — 22.1_Reading_lamps:8 D
gnd-A58RJ2.14-12 — 18.3_Parcel_Rack_Vent:2 C

Evaporator

AE54 (I/O_EB, 24WUp)
gnd-A54RJ1.6-18 — 18.2_HvacPass:0 D
gnd-A54RJ1.17-16 — 18.2_HvacPass:0 C
gnd-A54RJ1.18-14 — 18.2_HvacPass:4 B
18.3_Parcel_Rack_Vent:3 E
18.2_HvacPass:1 A
gnd-A54RJ2.2-16 — 25.1_Cmpt_Lighting:1 A
18.2_HvacPass:5 D
gnd-A54RJ2.3-16 — 18.2_HvacPass:3 C

WCL

AE57 (I/O_EA, 24WUp)
gnd-A57RJ1.18-18 — 36.1_WCL_Ricon:2 B

RJB

AE50 (I/O_EB, 24WUP)
gnd-A50RJ2.2-18 — 13.1_FanDriveElectric:1 D

AE51 (I/O_EB, 12WUp)
gnd-A51RJ1.5-18 — 26.1_Front_Lighting:4 D
gnd-A51RJ1.6-18 — 32.1_Kneeling:1 E
gnd-A51RJ1.17-18 — 26.2_Rear_lighting:1 F
gnd-A51RJ1.18-18 — 26.2_Rear_lighting:1 B
gnd-A51RJ2.2-18 — 26.3_Backup_Warnings:2 B

AE52 (I/O_EB, 12Wup)
gnd-A52RJ1.17-18 — 26.2_Rear_lighting:2 D
gnd-A52RJ1.18-16 — 36.1_WCL_Ricon:6 A

AE53 (I/O_EB, 24WUp)
gnd-A53RJ1.17-16 — 11.1_Lavatory:3 E
gnd-A53RJ1.18-18 — 25.1_Cmpt_Lighting:4 B

Ground distribution:
0-Electric gnd
00- Electronic Gnd
A-Dash - Lh console harness
F-Front junction box harness
FH-Front harness
FCH-Front clearance harness
R-Rear junction box harness
FR-Front to rear

Chassis ground distribution

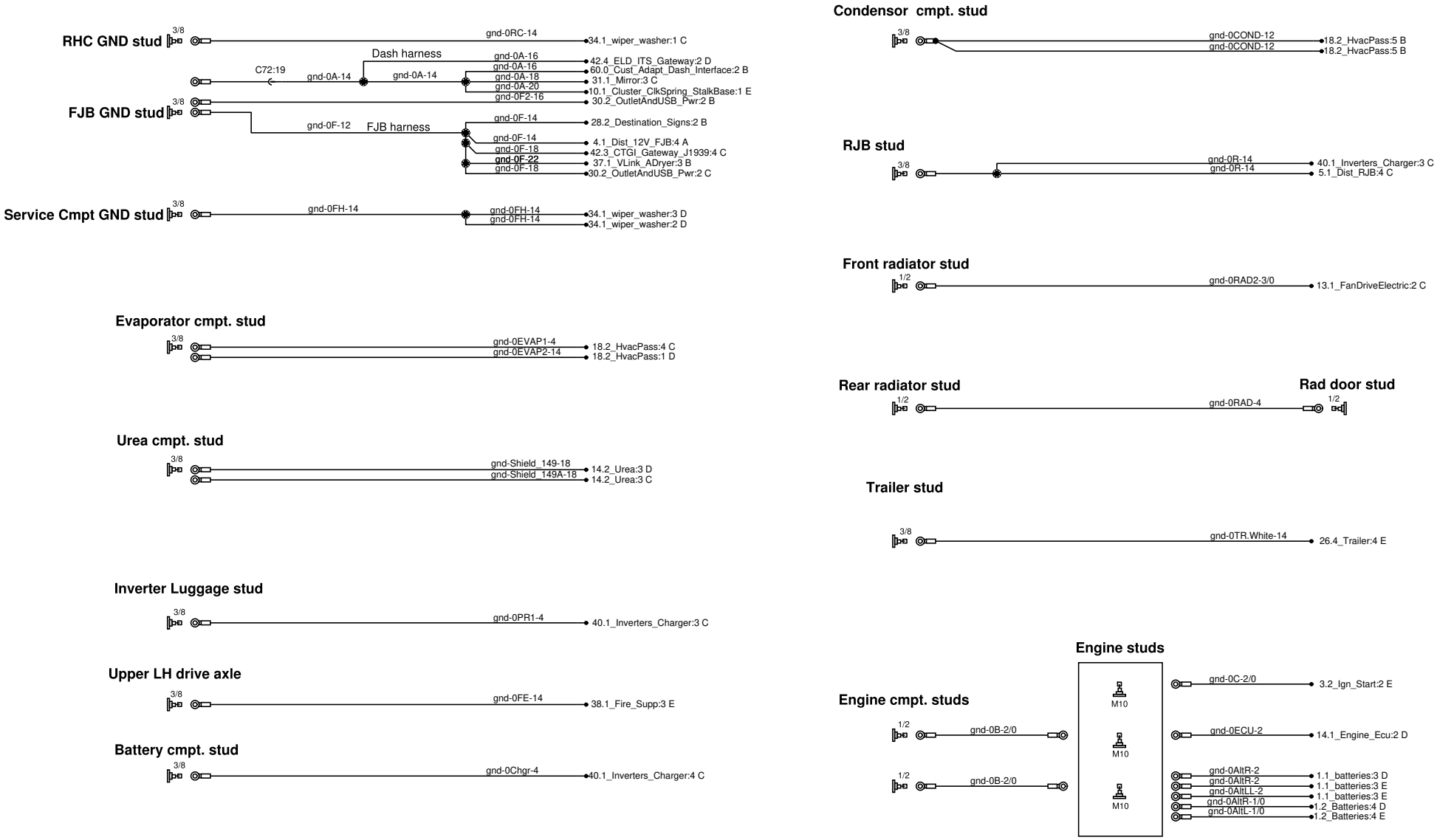

Main distribution batteries & ignition

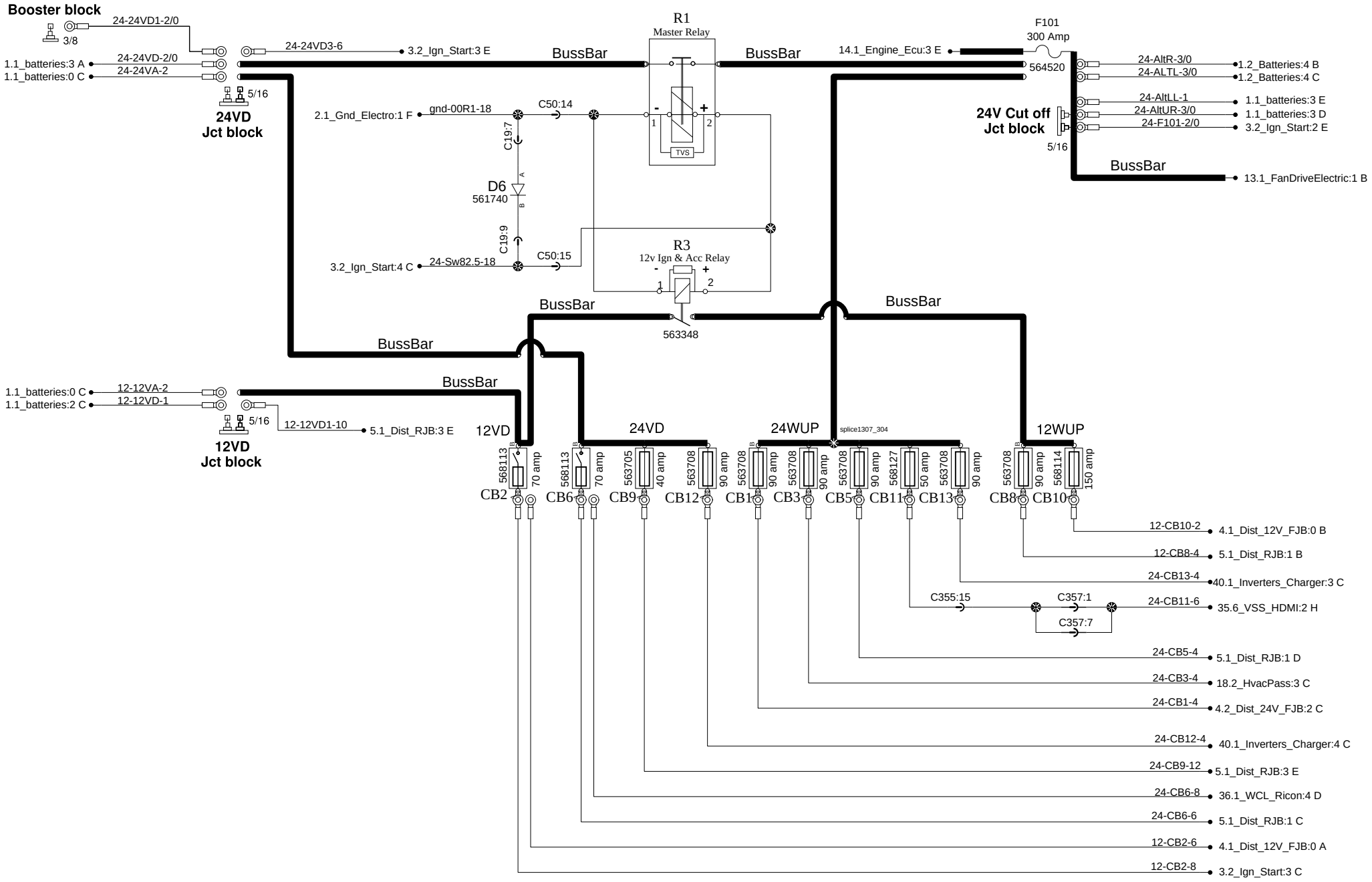

PREVOST®	WIRING DIAGRAM	No:D062140	Page:3.1	Rev:0

Main distribution batteries & ignition

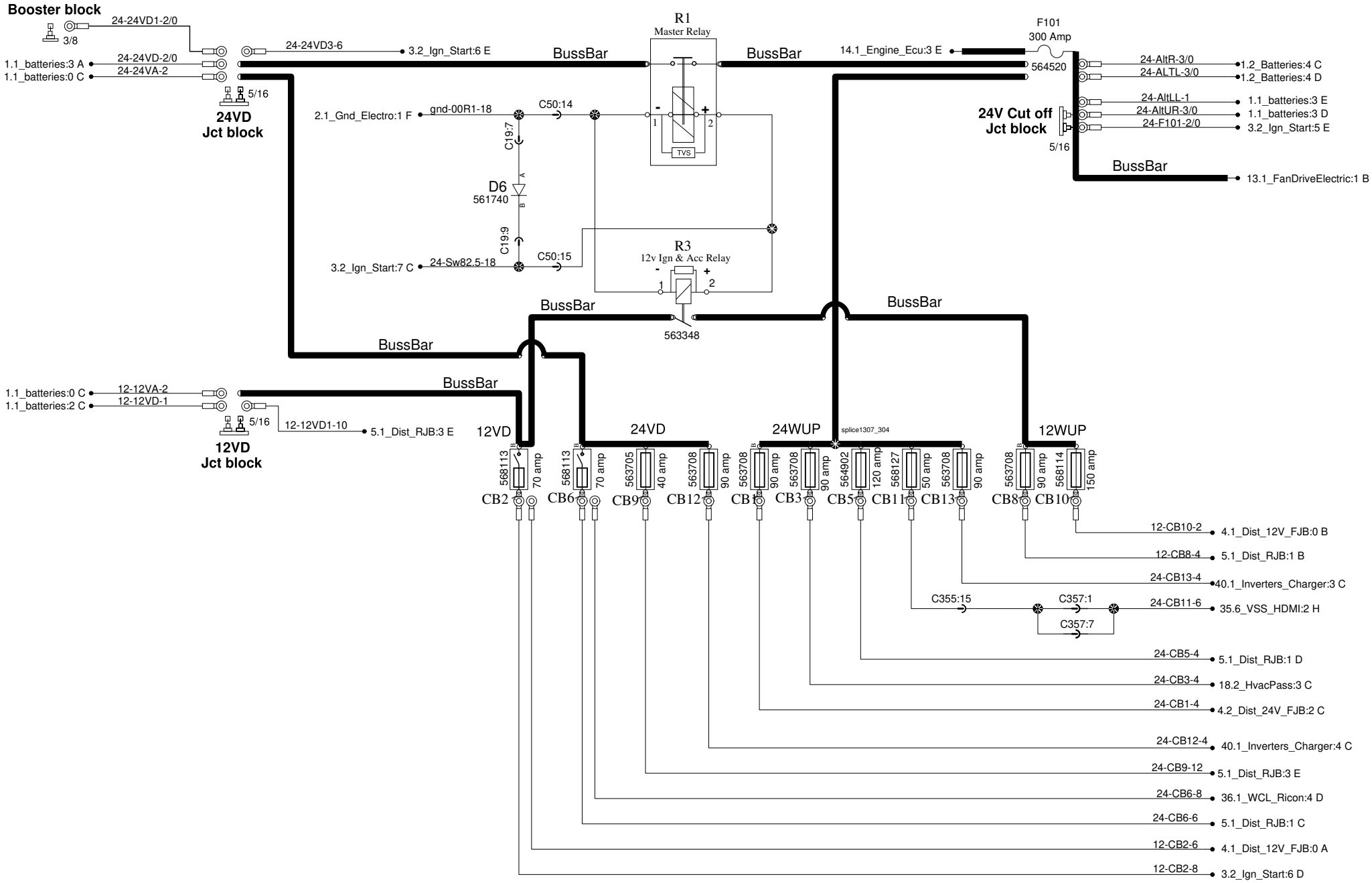

PREVOST®	WIRING DIAGRAM	No:D062140	Page:3.1	Rev:6

Main distribution batteries & ignition

Cutomer Adaptation

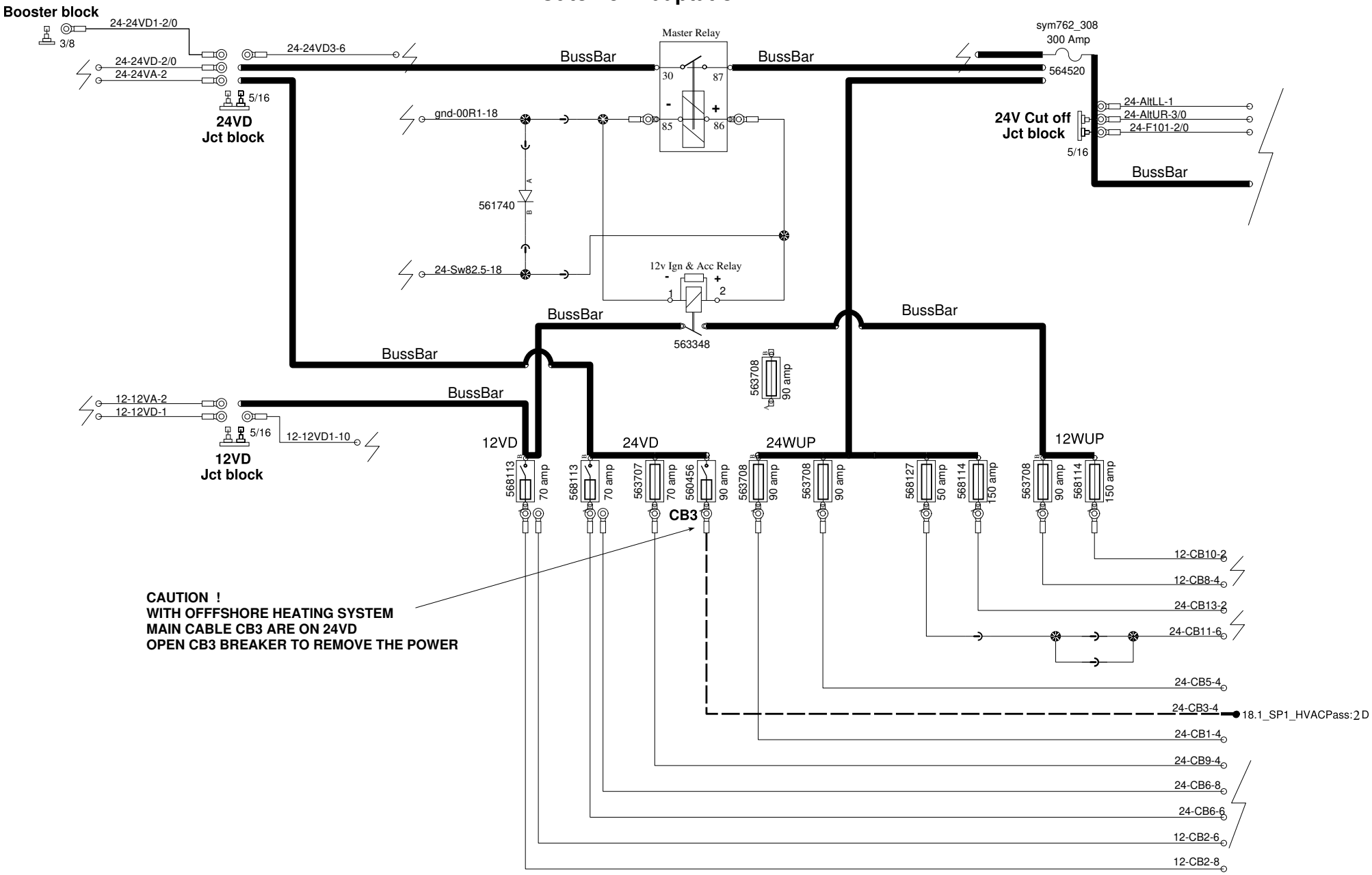

PREVOST®	WIRING DIAGRAM	No:D062140	Page:3.1 SP1	Rev:00

Main distribution batteries & ignition

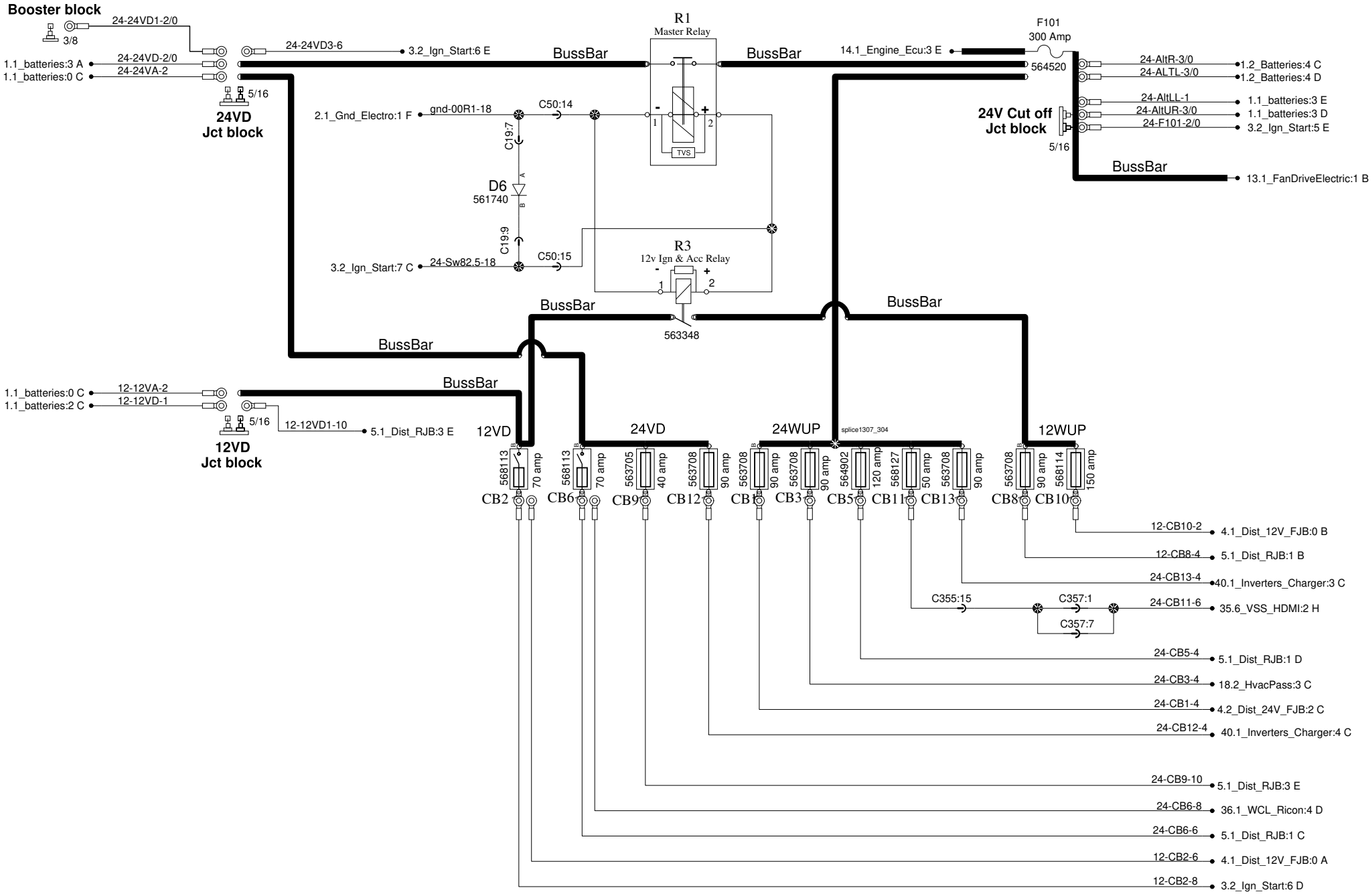

PREVOST®	WIRING DIAGRAM	No:D062140	Page:3.1	Rev:7

Ignition and engine start

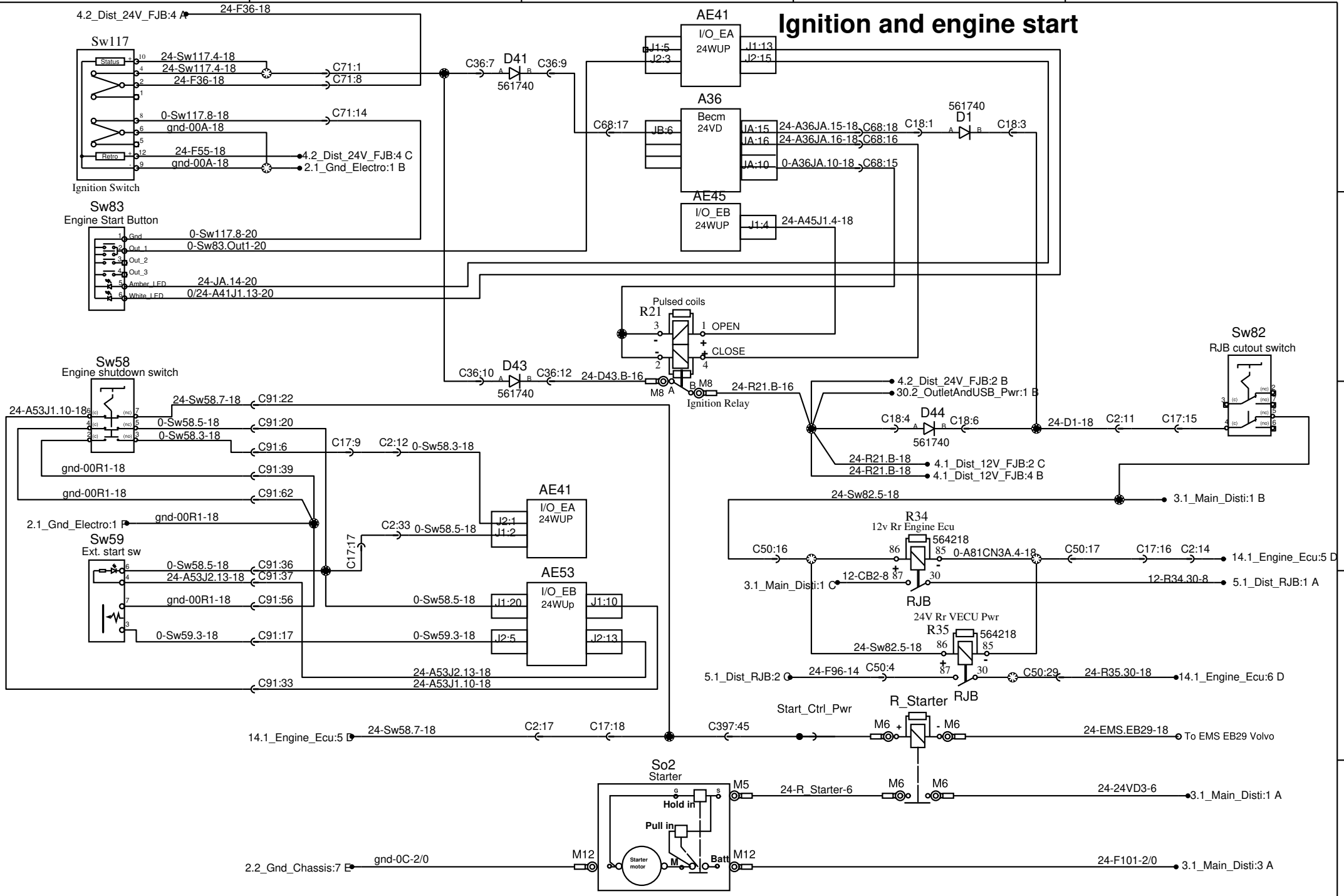

PREVOST®	WIRING DIAGRAM	No:D062140	Page:3.2	Rev:3

Ignition and engine start

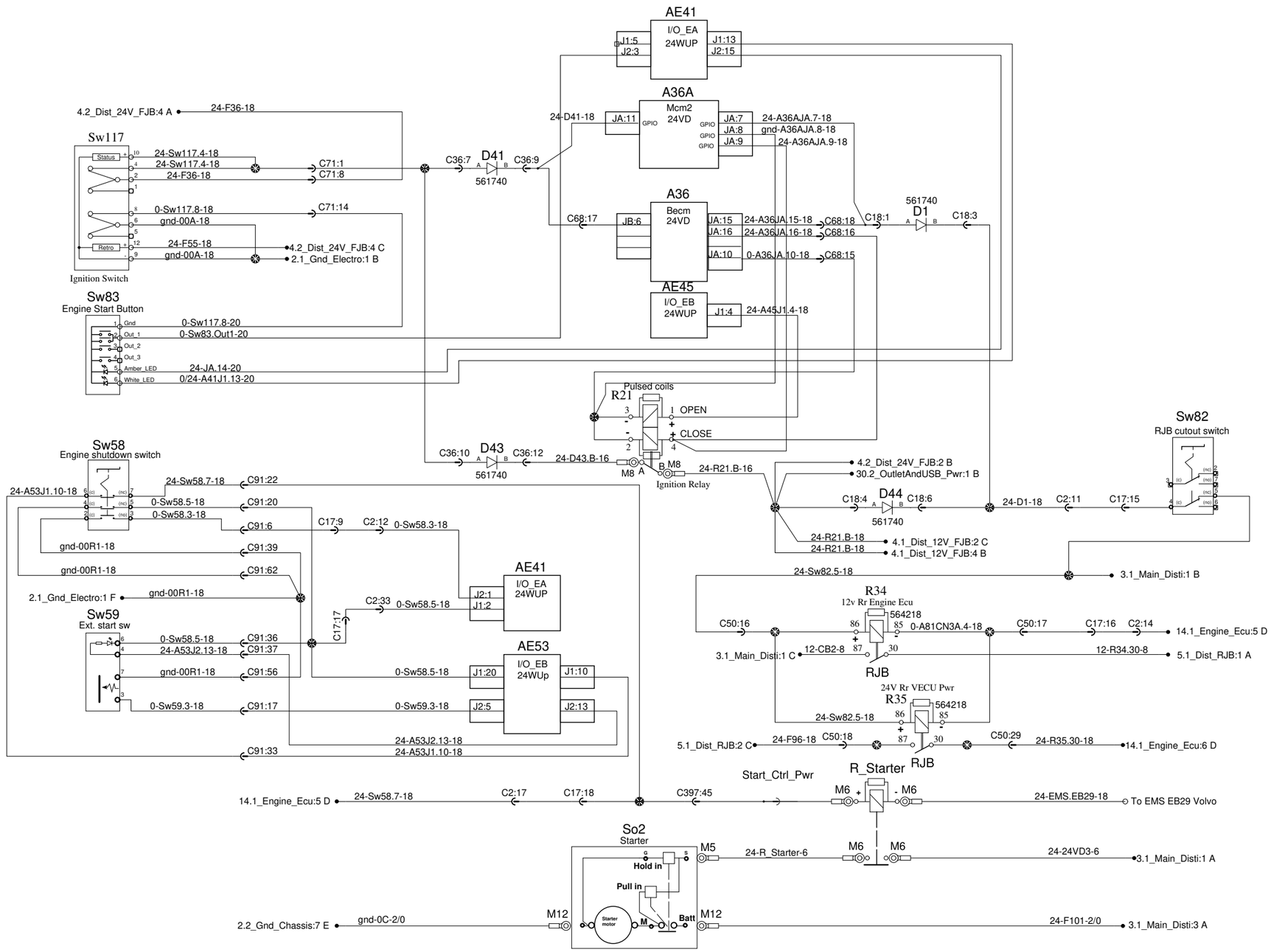

PREVOST®	WIRING DIAGRAM	No:D062140	Page:3.2	Rev:7

Ignition and engine start

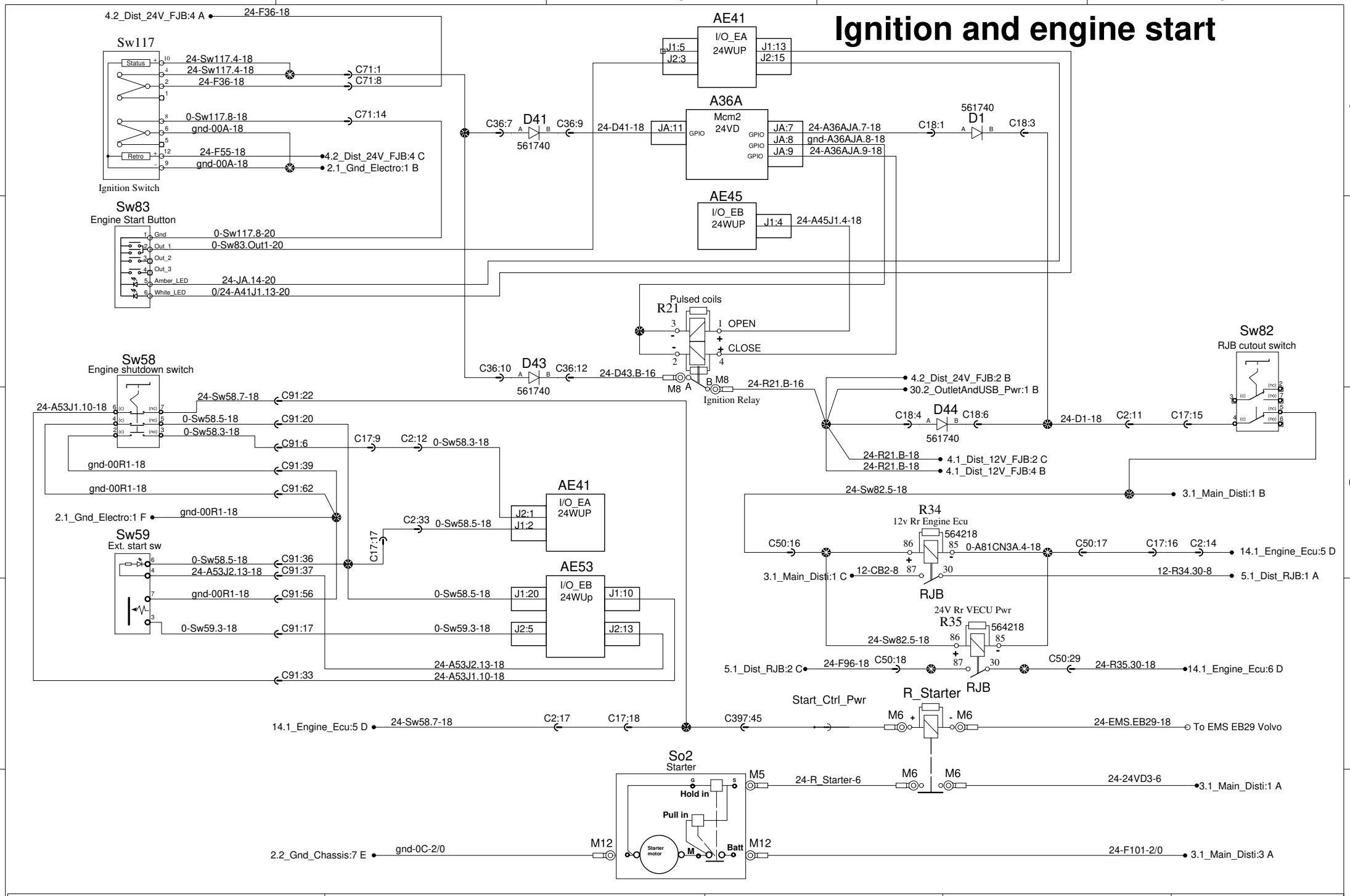

PREVOST®	WIRING DIAGRAM	No:D062140	Page:3.2	Rev:9

12V Power distribution front junction box

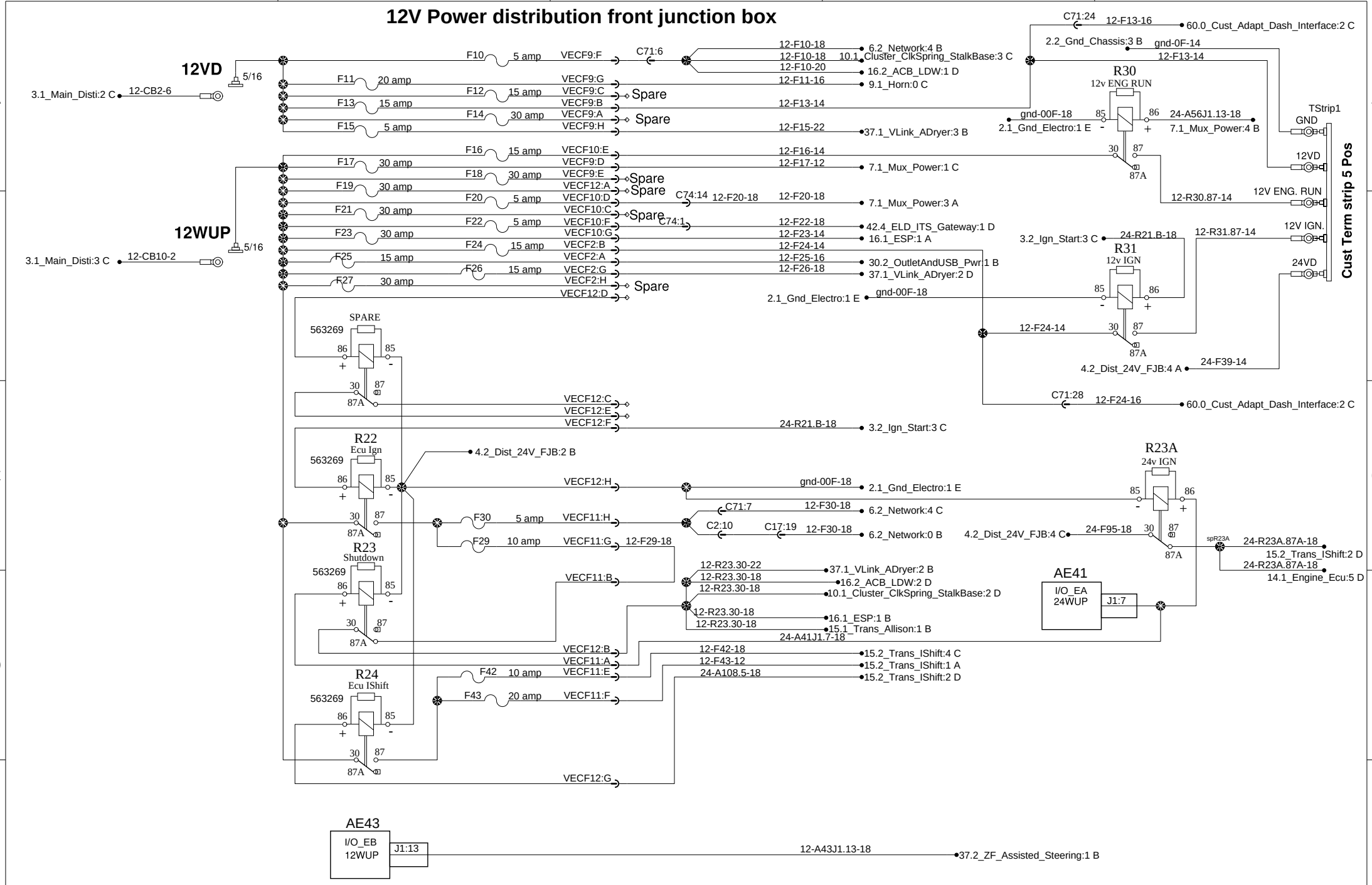

PREVOST®	WIRING DIAGRAM	No:D062140	Page:4.1	Rev:00

12V Power distribution front junction box

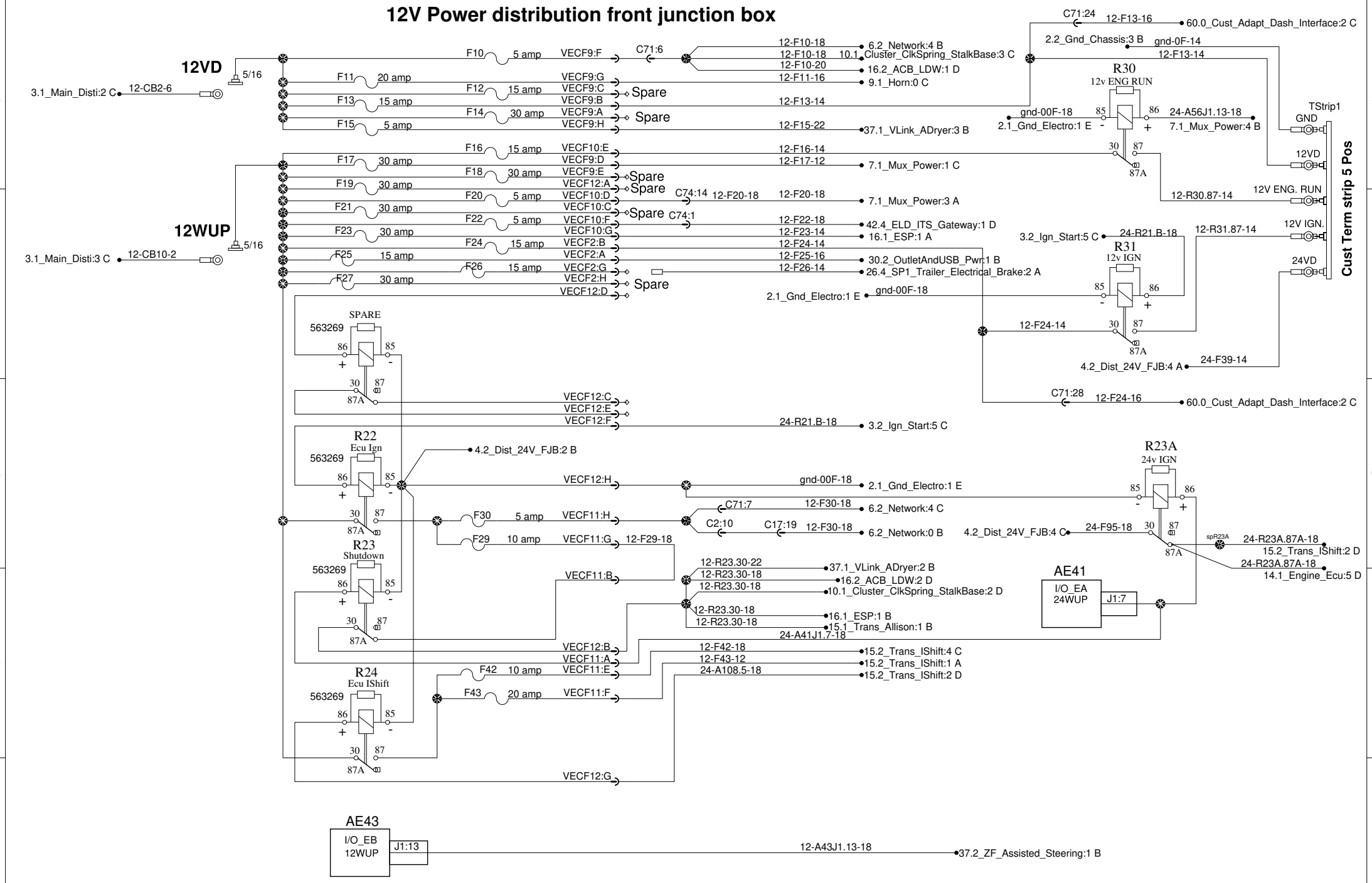

PREVOST®	WIRING DIAGRAM	No:D062140	Page:4.1	Rev:08

24V Power distribution front junction box

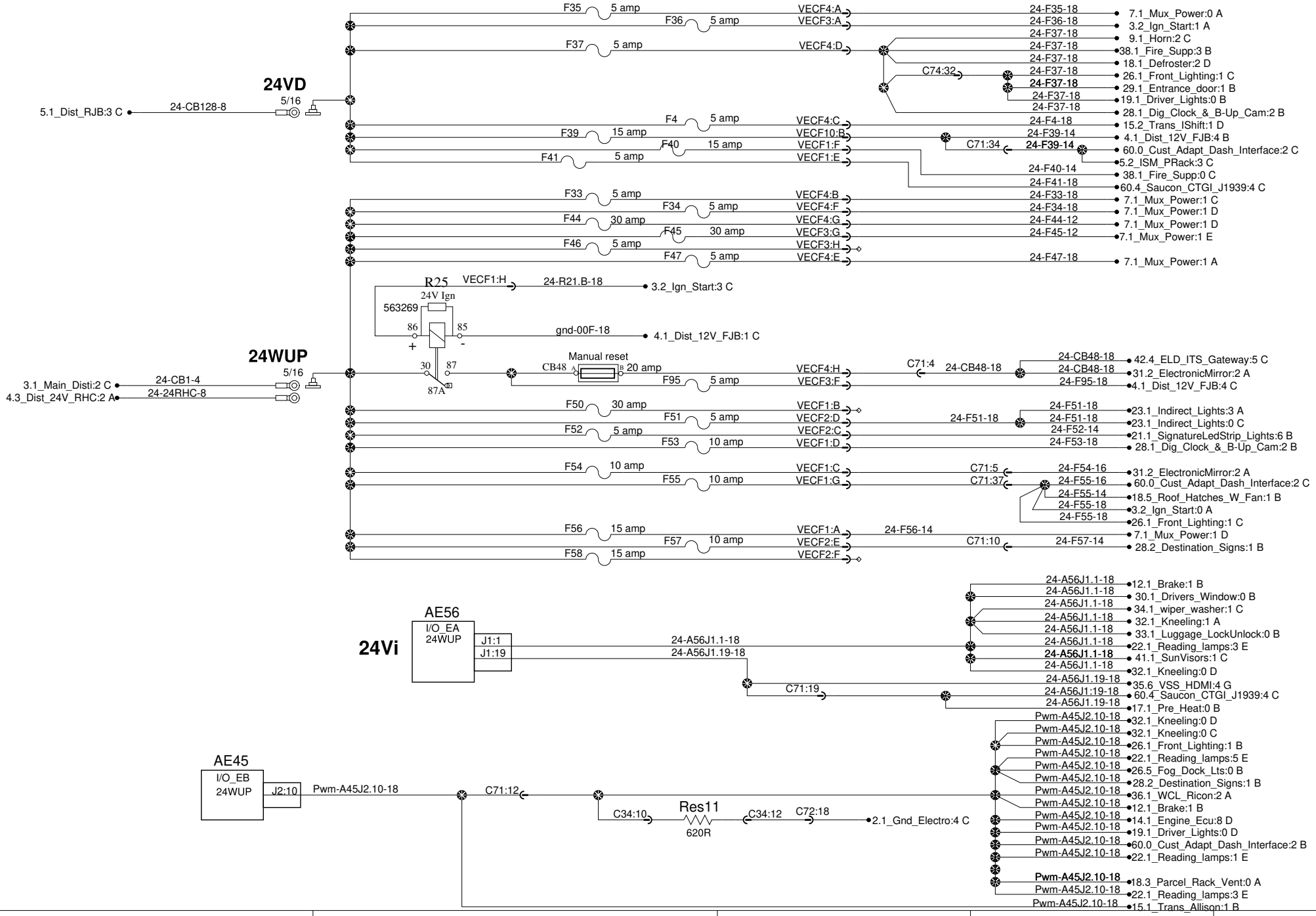

PREVOST®	WIRING DIAGRAM	No:D062140	Page:4.2	Rev:5

24V Power distribution front junction box

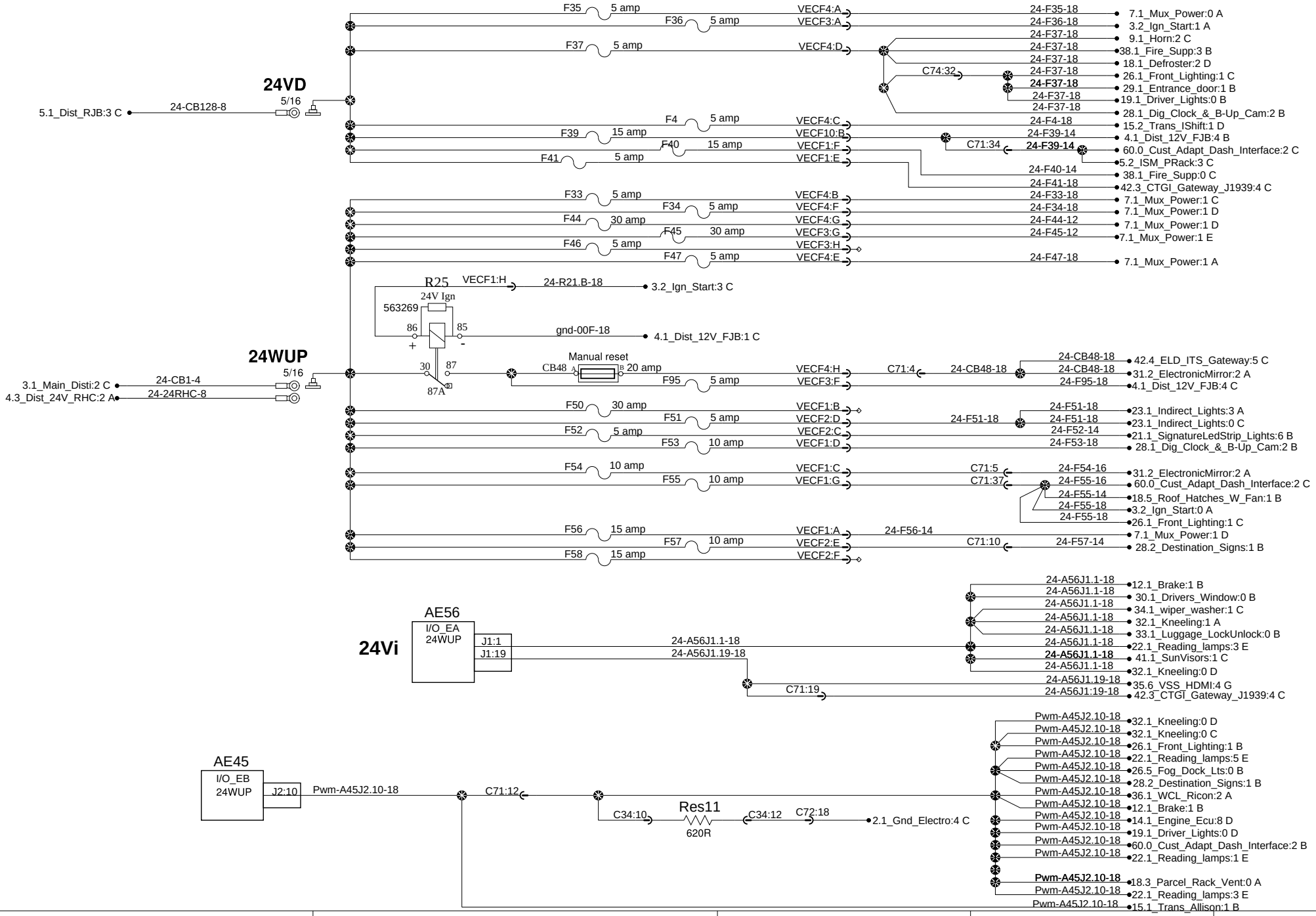

PREVOST®	WIRING DIAGRAM	No:D062140	Page:4.2	Rev:00

24V Power distribution front junction box

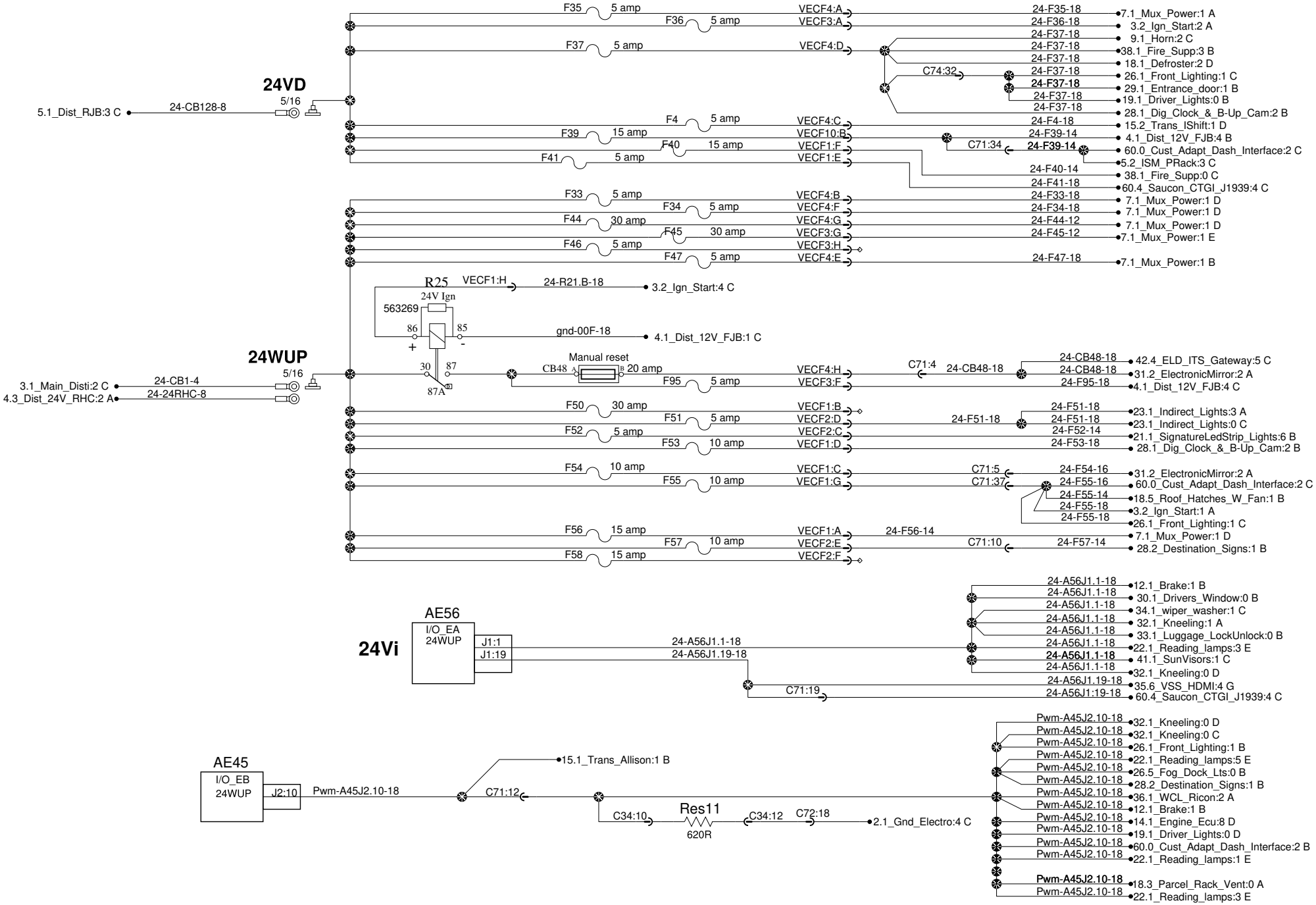

PREVOST®

WIRING DIAGRAM

No:D062140

Page:4.2

Rev:9

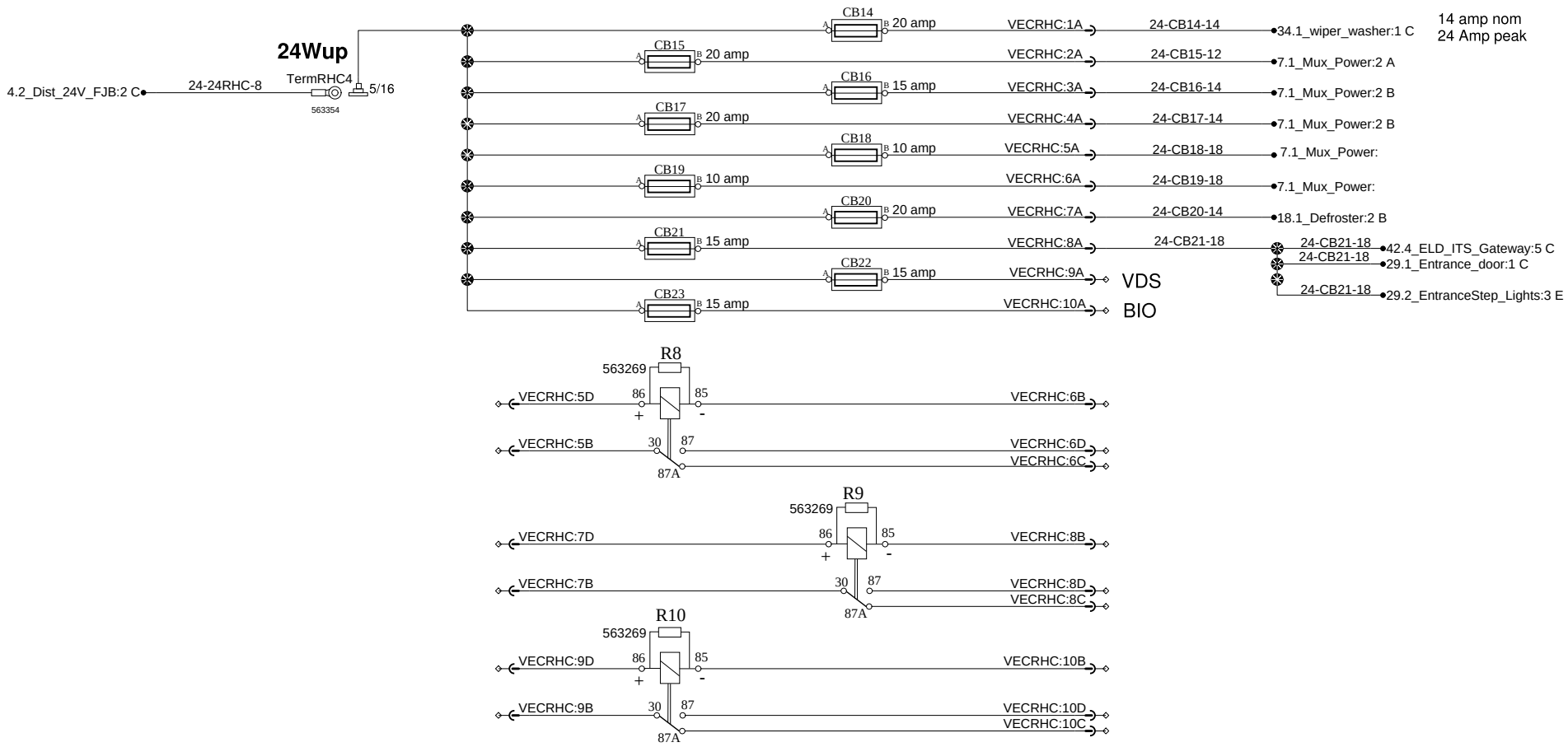

PREVOST®	WIRING DIAGRAM	No:D062140	Page:4.3	Rev:0

Power distribution rear junction box

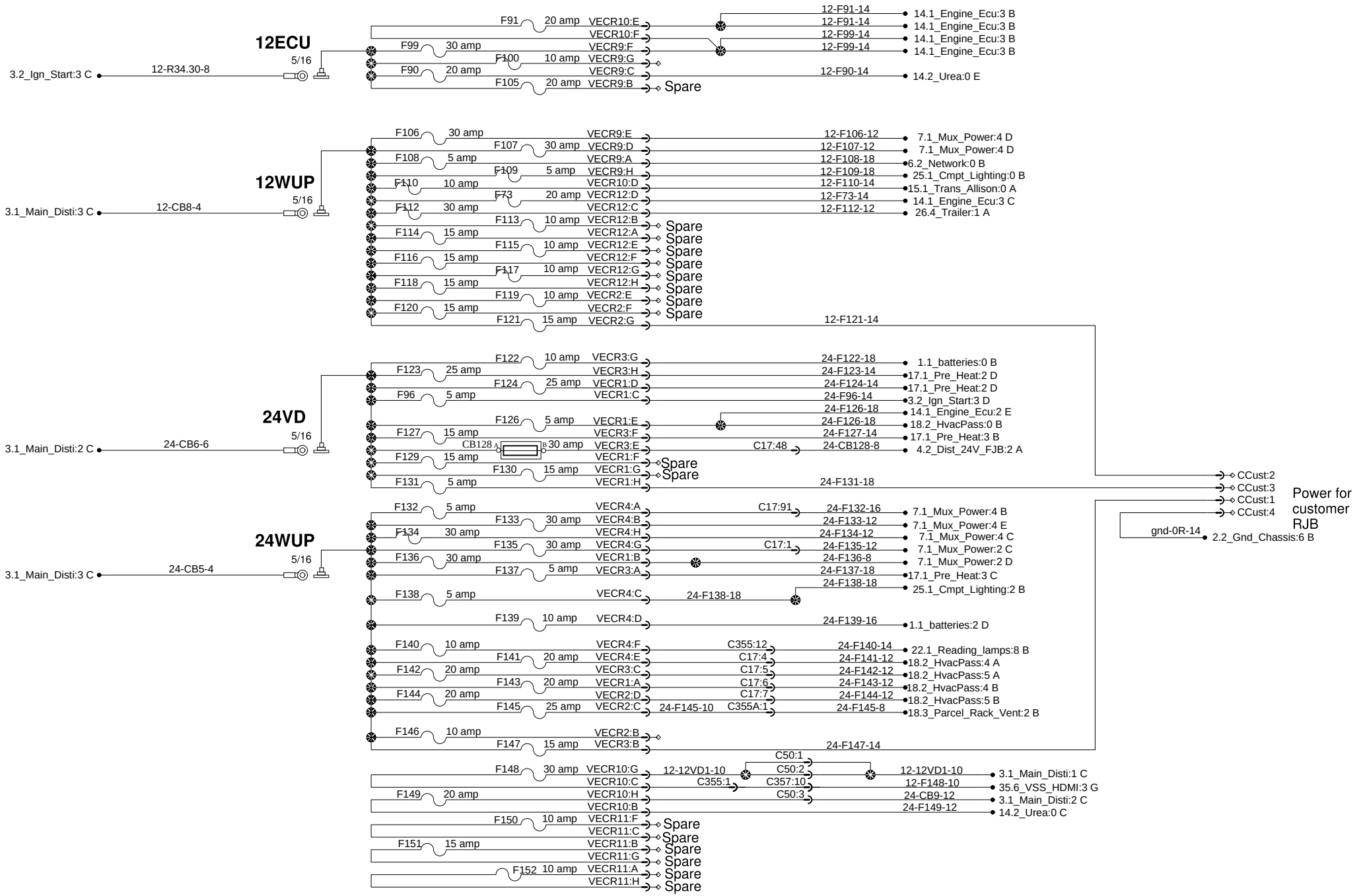

PREVOST®	WIRING DIAGRAM	No:D062140	Page:5.1	Rev:0

Power distribution rear junction box

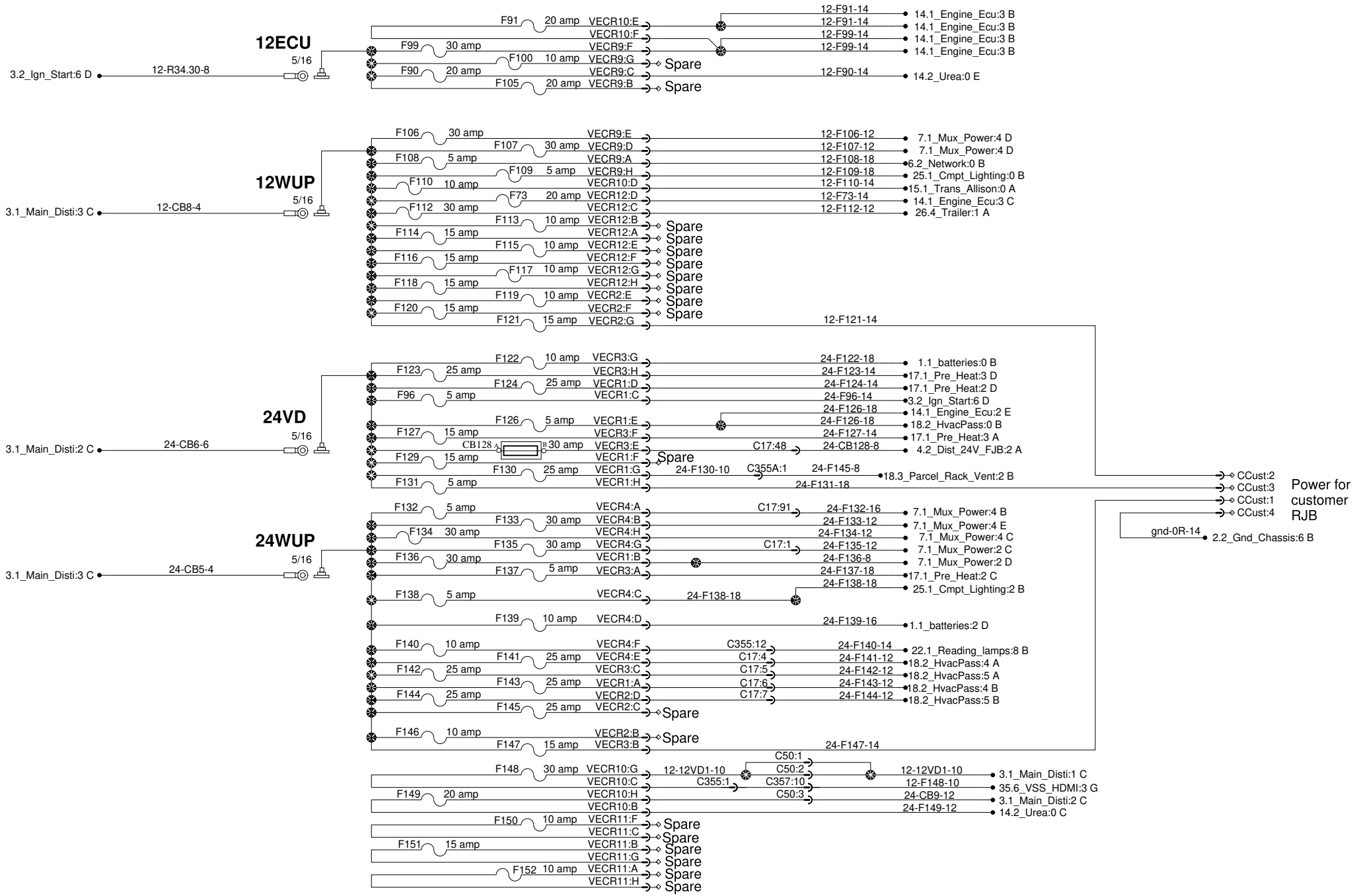

PREVOST®	WIRING DIAGRAM	No:D062140	Page:5.1	Rev:6

Power distribution rear junction box

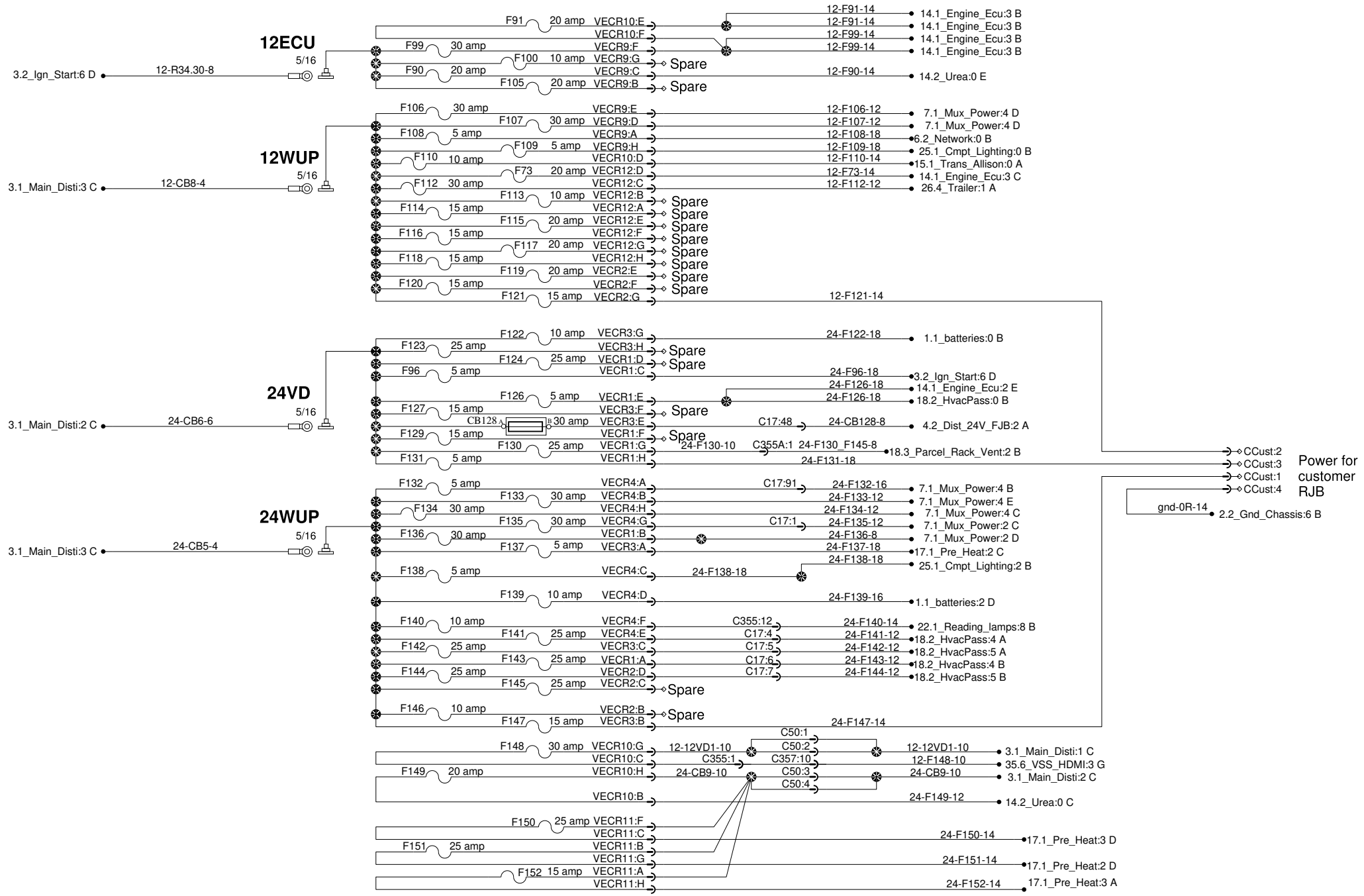

PREVOST®	WIRING DIAGRAM	No:D062140	Page:5.1	Rev:8

ISM Parcel Rack

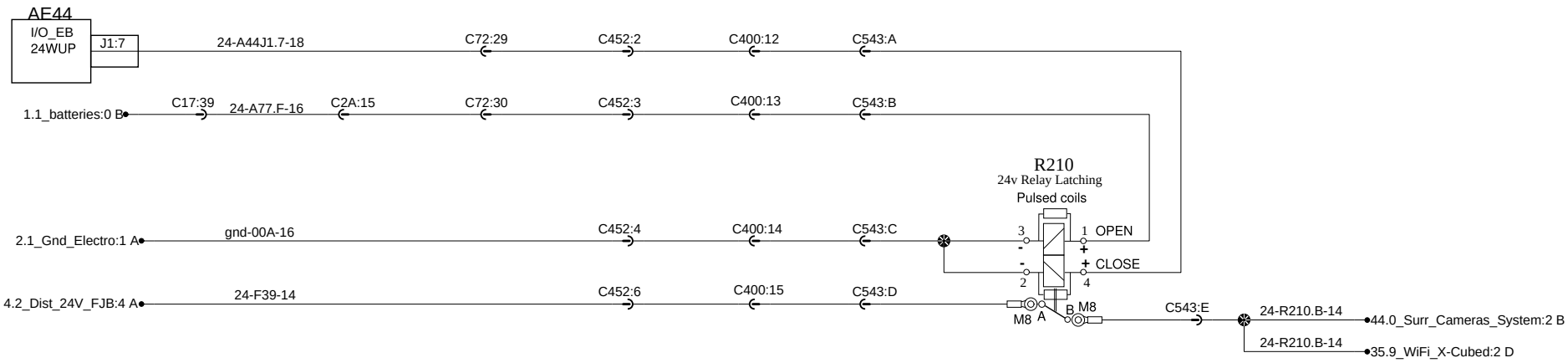

PREVOST®	WIRING DIAGRAM	No:D062140	Page:5.2	Rev:0

ISM PARCEL RACK WITH TIMER

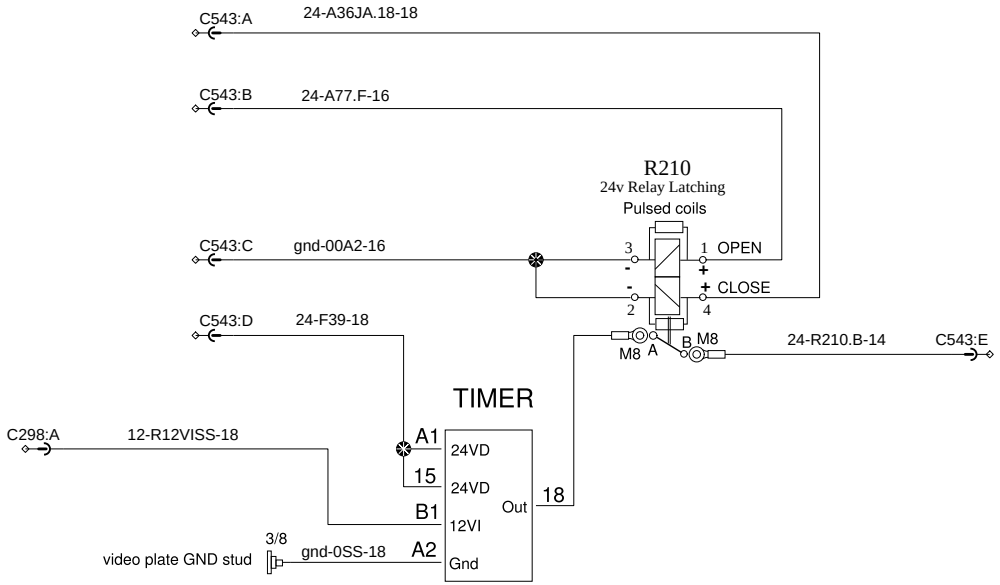

PREVOST®	WIRING DIAGRAM	No: D062140	Page:5.2 SP1	Rev:01

Multiplex Can, J1587, 1939 network and addressing

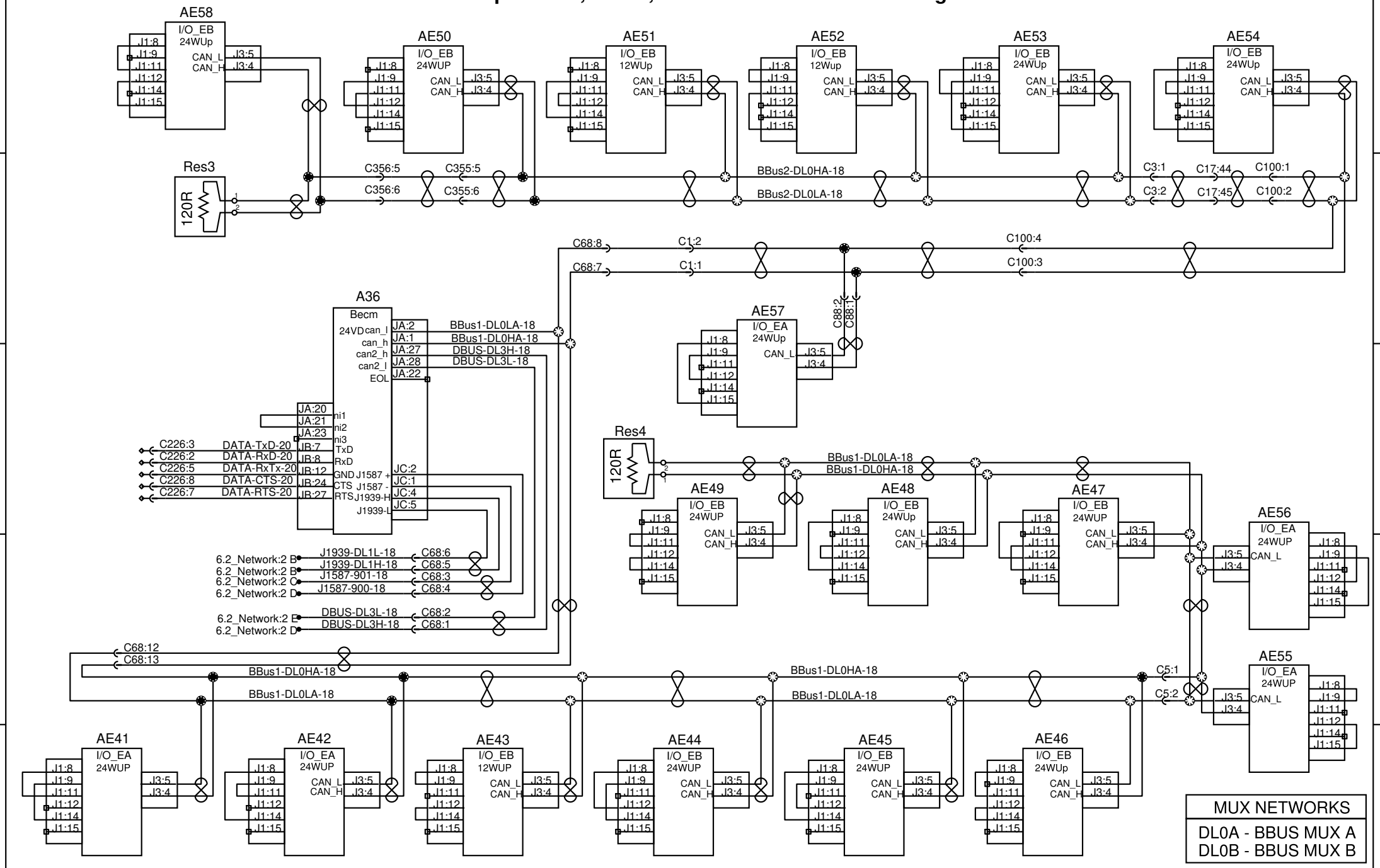

PREVOST®

WIRING DIAGRAM

No:D062140

Page:6.1

Rev:3

Multiplex Can, J1587, 1939 network and addressing

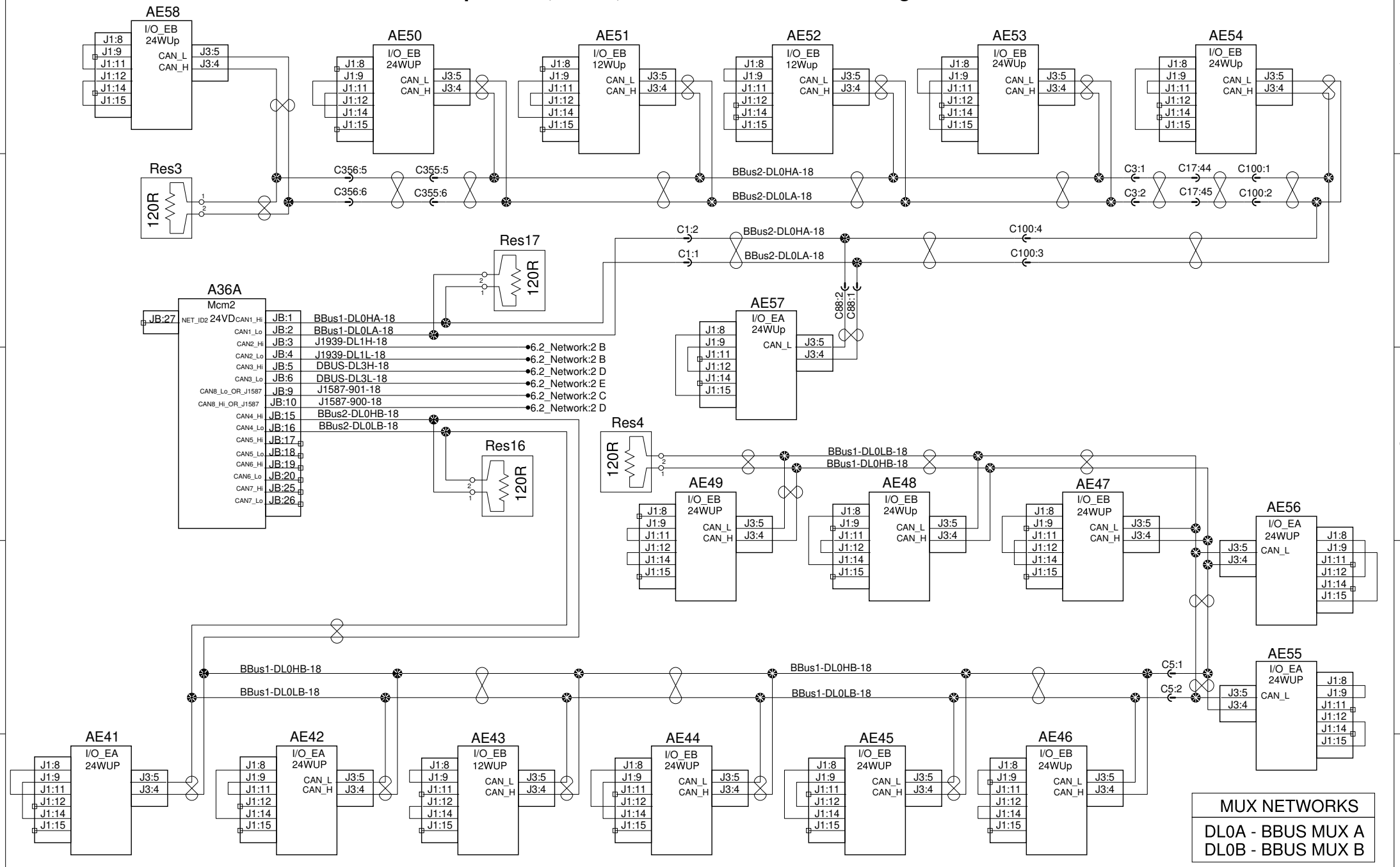

PREVOST®

WIRING DIAGRAM	No:D062140	Page:6.1	Rev:9

J1939, Can Iso J2284, J1587 and DBUS

Open C194 and connect C194spA and C194spB to connect Vansco gateway.

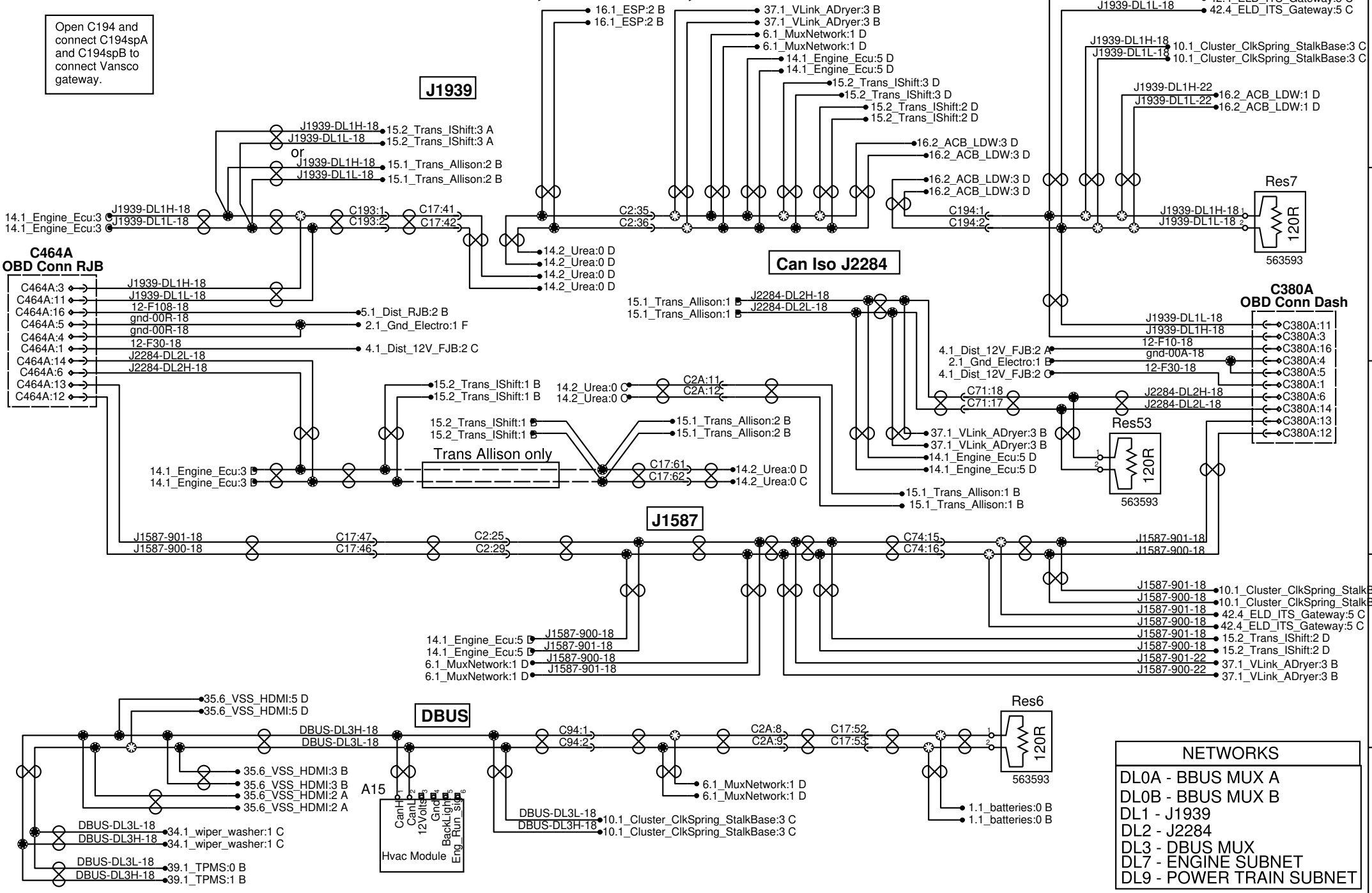

NETWORKS
DL0A - BBUS MUX A
DL0B - BBUS MUX B
DL1 - J1939
DL2 - J2284
DL3 - DBUS MUX
DL7 - ENGINE SUBNET
DL9 - POWER TRAIN SUBNET

J1939, Can Iso J2284, J1587 and DBUS

Open C194 and connect C194spA and C194spB to connect Vansco gateway.

J1939

16.1_ESP:2 B
16.1_ESP:2 B
J1939-DL1H-22 — 37.1_VLink_ADryer:3 B
J1939-DL1L-22 — 37.1_VLink_ADryer:3 B
6.1_MuxNetwork:2 D
6.1_MuxNetwork:2 D
14.1_Engine_Ecu:5 D
14.1_Engine_Ecu:5 D
15.2_Trans_IShift:3 D
15.2_Trans_IShift:3 D
15.2_Trans_IShift:2 D
15.2_Trans_IShift:2 D
16.2_ACB_LDW:3 D
16.2_ACB_LDW:3 D
16.2_ACB_LDW:3 D
16.2_ACB_LDW:3 D

J1939-DL1H-18 — 15.2_Trans_IShift:3 A
J1939-DL1L-18 — 15.2_Trans_IShift:3 A
or
J1939-DL1H-18 — 15.1_Trans_Allison:2 B
J1939-DL1L-18 — 15.1_Trans_Allison:2 B

14.1_Engine_Ecu:3 C — J1939-DL1H-18
14.1_Engine_Ecu:3 C — J1939-DL1L-18
C193:1 — C17:41
C193:2 — C17:42
DL1H — C2:35
DL1L — C2:36
14.2_Urea:0 D
14.2_Urea:0 D
14.2_Urea:0 D
14.2_Urea:0 D

J1939-DL1H-18 — 42.4_ELD_ITS_Gateway:5 C
J1939-DL1L-18 — 42.4_ELD_ITS_Gateway:5 C
J1939-DL1H-18 — 10.1_Cluster_ClkSpring_StalkBase:3 C
J1939-DL1L-18 — 10.1_Cluster_ClkSpring_StalkBase:3 C
J1939-DL1H-22 — 16.2_ACB_LDW:1 D
J1939-DL1L-22 — 16.2_ACB_LDW:1 D

C194:1
C194:2
J1939-DL1H-18
J1939-DL1L-18
Res7
120R
563593

C464A
OBD Conn RJB

C464A:3 — J1939-DL1H-18
C464A:11 — J1939-DL1L-18
C464A:16 — 12-F108-18 — 5.1_Dist_RJB:2 A
C464A:5 — gnd-00R-18 — 2.1_Gnd_Electro:1 F
C464A:4 — gnd-00R-18
C464A:1 — 12-F30-18 — 4.1_Dist_12V_FJB:2 C
C464A:14 — J2284-DL2L-18
C464A:6 — J2284-DL2H-18
C464A:13
C464A:12

Can Iso J2284

15.1_Trans_Allison:1 B — J2284-DL2H-18
15.1_Trans_Allison:1 B — J2284-DL2L-18

C380A
OBD Conn Dash

J1939-DL1L-18 — C380A:11
J1939-DL1H-18 — C380A:3
4.1_Dist_12V_FJB:2 A — 12-F10-18 — C380A:16
2.1_Gnd_Electro:1 B — gnd-00A-18 — C380A:4
4.1_Dist_12V_FJB:2 C — 12-F30-18 — C380A:5
C380A:1
C71:18 — J2284-DL2H-18 — C380A:6
C71:17 — J2284-DL2L-18 — C380A:14
C380A:13
C380A:12

15.2_Trans_IShift:1 B
15.2_Trans_IShift:1 B
14.2_Urea:0 C — C2A:11
14.2_Urea:0 C — C2A:12

15.2_Trans_IShift:1 B
15.2_Trans_IShift:1 B
15.1_Trans_Allison:2 B
15.1_Trans_Allison:2 B

Trans Allison only

14.1_Engine_Ecu:3 D
14.1_Engine_Ecu:3 D
C17:61 — 14.2_Urea:0 D
C17:62 — 14.2_Urea:0 C

37.1_VLink_ADryer:3 B
37.1_VLink_ADryer:3 B
14.1_Engine_Ecu:5 D
14.1_Engine_Ecu:5 D

Res53
120R
563593

J2284-DL2H-18 — 15.1_Trans_Allison:1 B
J2284-DL2L-18 — 15.1_Trans_Allison:1 B

J1587

J1587-901-18
J1587-900-18
C17:47
C17:46
C2:25
C2:29
C74:15
C74:16
J1587-901-18
J1587-900-18

6.1_MuxNetwork:2 D
6.1_MuxNetwork:2 D

14.1_Engine_Ecu:5 D — J1587-900-18
14.1_Engine_Ecu:5 D — J1587-901-18

J1587-901-18 — 10.1_Cluster_ClkSpring_StalkBase:3 C
J1587-900-18 — 10.1_Cluster_ClkSpring_StalkBase:3 C
J1587-901-18 — 42.4_ELD_ITS_Gateway:5 C
J1587-900-18 — 42.4_ELD_ITS_Gateway:5 C
J1587-901-18 — 15.2_Trans_IShift:2 D
J1587-900-18 — 15.2_Trans_IShift:2 D
J1587-901-22 — 37.1_VLink_ADryer:3 B
J1587-900-22 — 37.1_VLink_ADryer:3 B

A36A
Mcm2
LIN1_DATA — JB:21 — C2B:20 — LIN-LinP-18 — 1.2_Batteries:2 D
LIN1_GND — JB:22 — C2B:19 — LIN-LinN-18 — 1.2_Batteries:2 D
24VD

DBUS

35.6_VSS_HDMI:5 D
35.6_VSS_HDMI:5 D
DBUS-DL3H-18
DBUS-DL3L-18
35.6_VSS_HDMI:3 B
35.6_VSS_HDMI:3 B
35.6_VSS_HDMI:2 A
35.6_VSS_HDMI:2 A

DBUS-DL3L-18 — 34.1_wiper_washer:1 C
DBUS-DL3H-18 — 34.1_wiper_washer:1 C
DBUS-DL3L-18 — 39.1_TPMS:1 C
DBUS-DL3H-18 — 39.1_TPMS:1 B

A15
1 CanH
2 CanL
3 12Volts
4 Gnd
5 BackLight
6 Eng_Run_sig
Hvac Module

C94:1 — DL3H
C94:2 — DL3L
C2A:8
C2A:9
C17:52
C17:53

DBUS-DL3L-18 — 6.1_MuxNetwork:2 D
DBUS-DL3H-18 — 6.1_MuxNetwork:2 D

DBUS-DL3L-18 — 10.1_Cluster_ClkSpring_StalkBase:3 C
DBUS-DL3H-18 — 10.1_Cluster_ClkSpring_StalkBase:3 C

Res6
120R
563593

1.1_batteries:0 B
1.1_batteries:0 B

NETWORKS
DL0A - BBUS MUX A
DL0B - BBUS MUX B
DL1 - J1939
DL2 - J2284
DL3 - DBUS MUX
DL7 - ENGINE SUBNET
DL9 - POWER TRAIN SUBNET

PREVOST®

WIRING DIAGRAM | No:D062140 | Page:6.2 | Rev:9

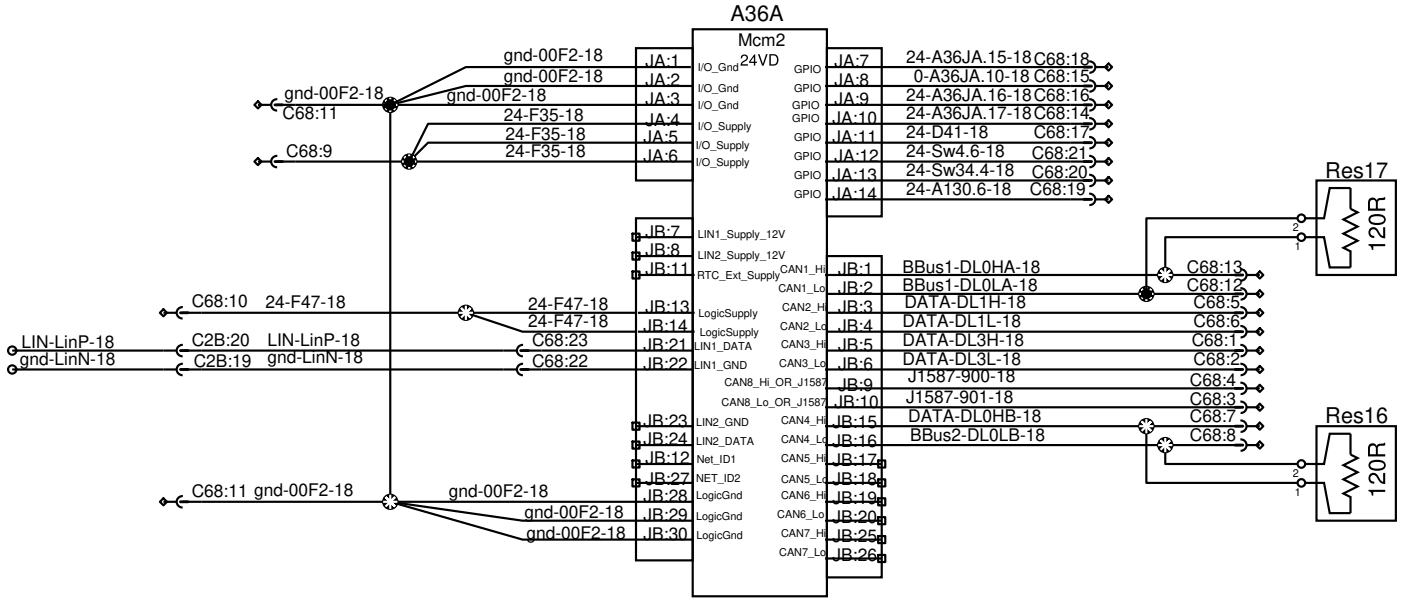

PREVOST®	WIRING DIAGRAM	No:D062140	Page:6.3	Rev:3

Multiplex power supply distribution

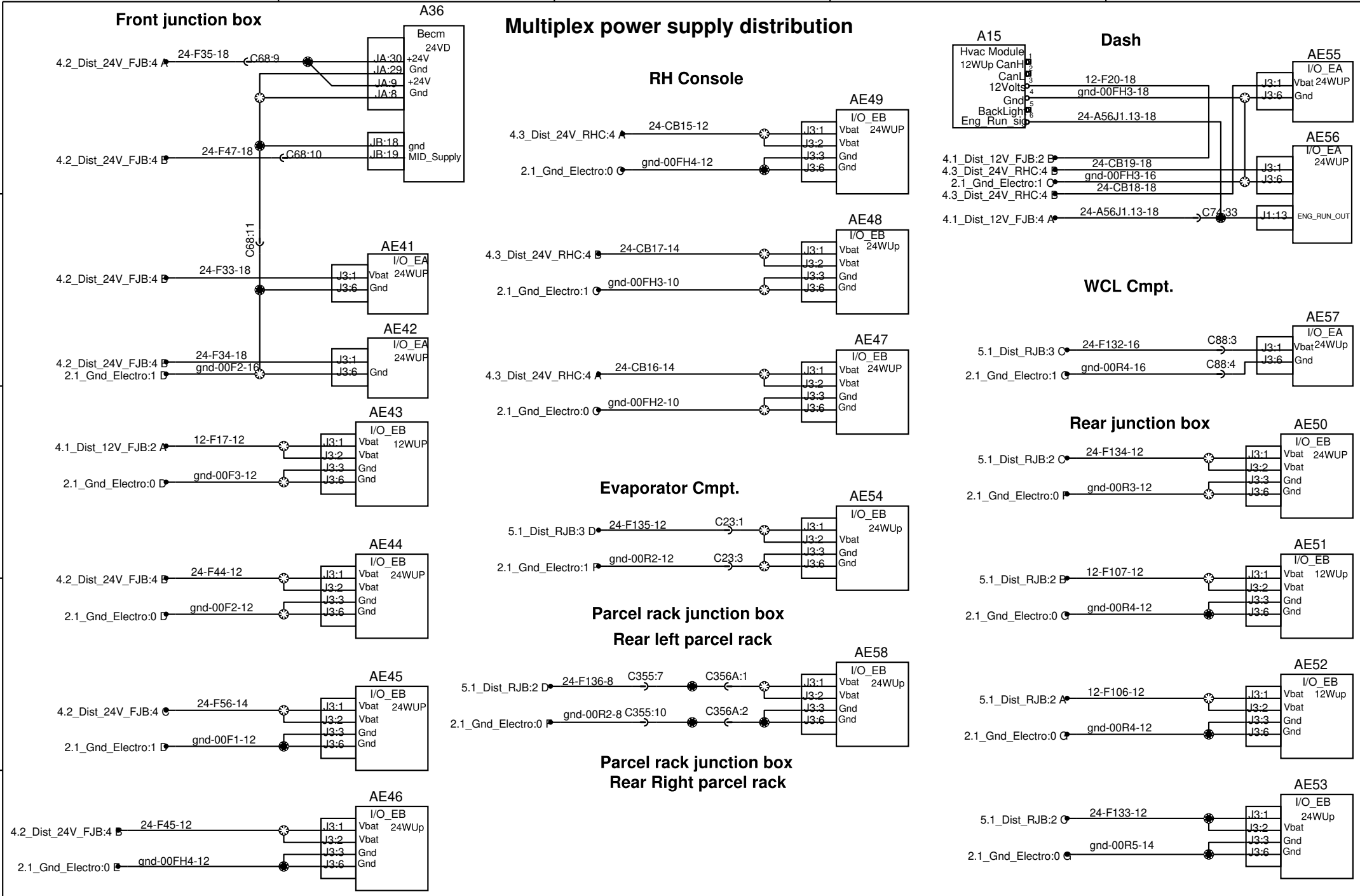

PREVOST®	WIRING DIAGRAM	No:D062140	Page:7.1	Rev:3

Multiplex power supply distribution

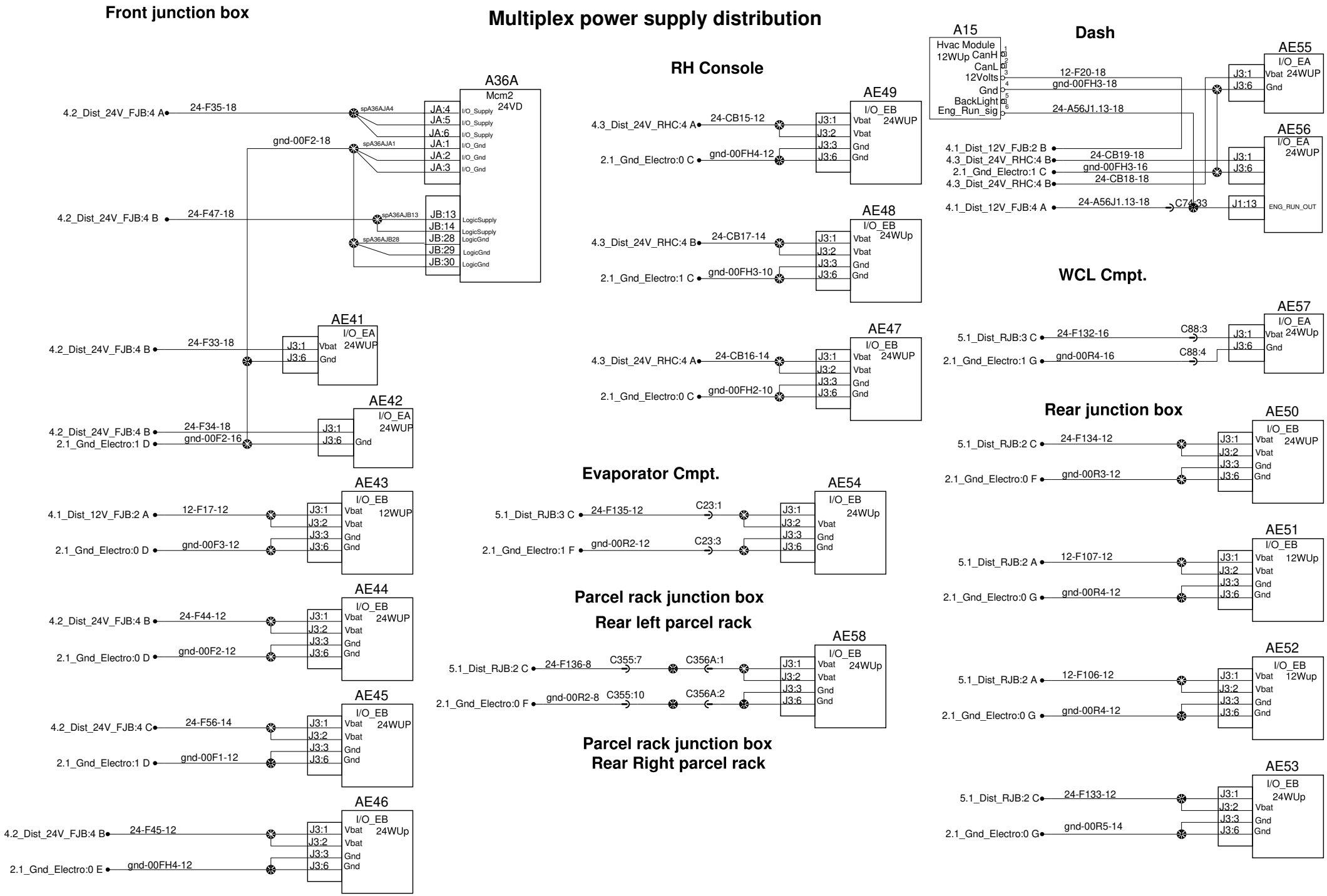

PREVOST®	WIRING DIAGRAM	No:D062140	Page:7.1	Rev:9

Spares wires

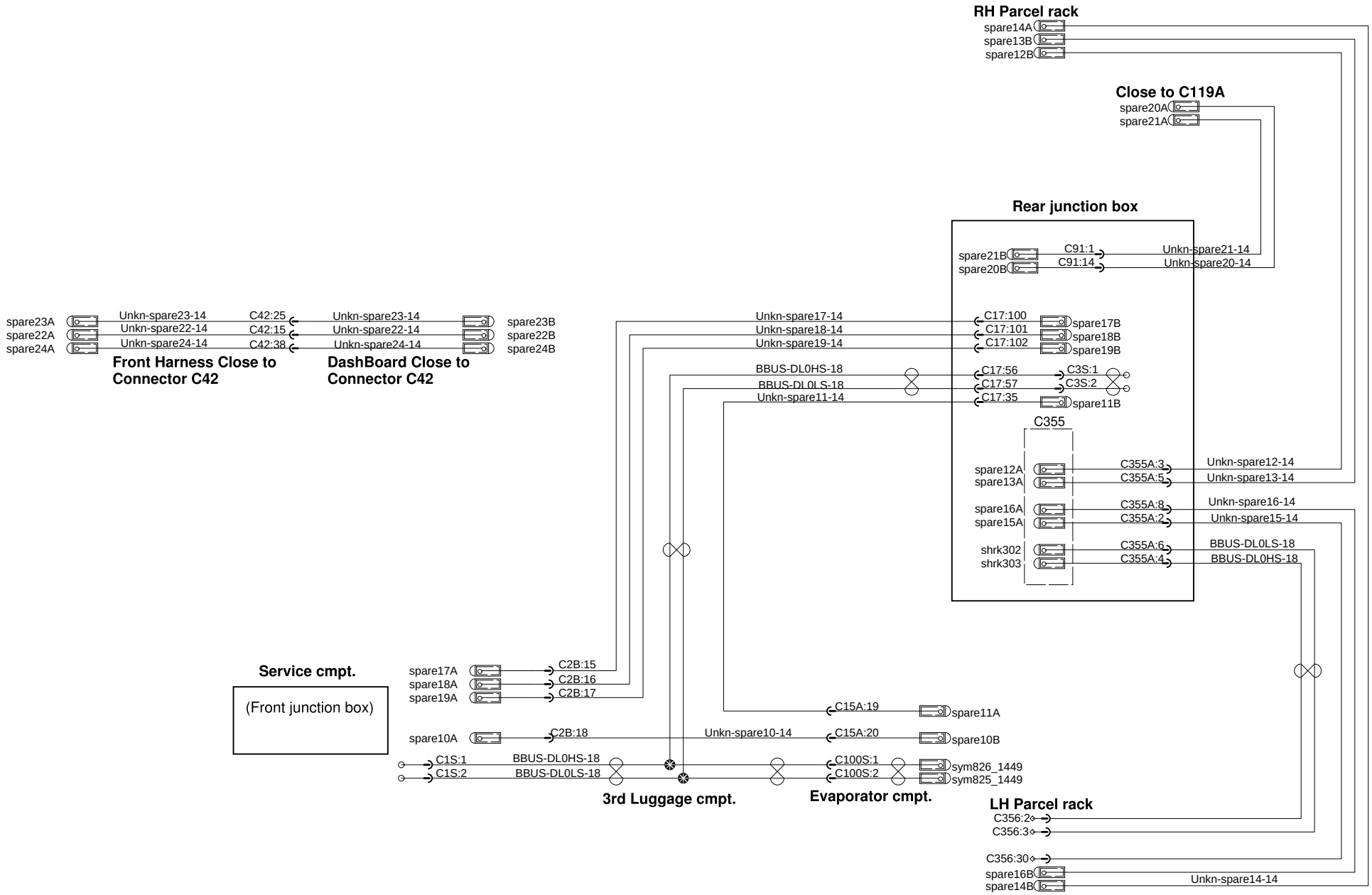

Spares wires

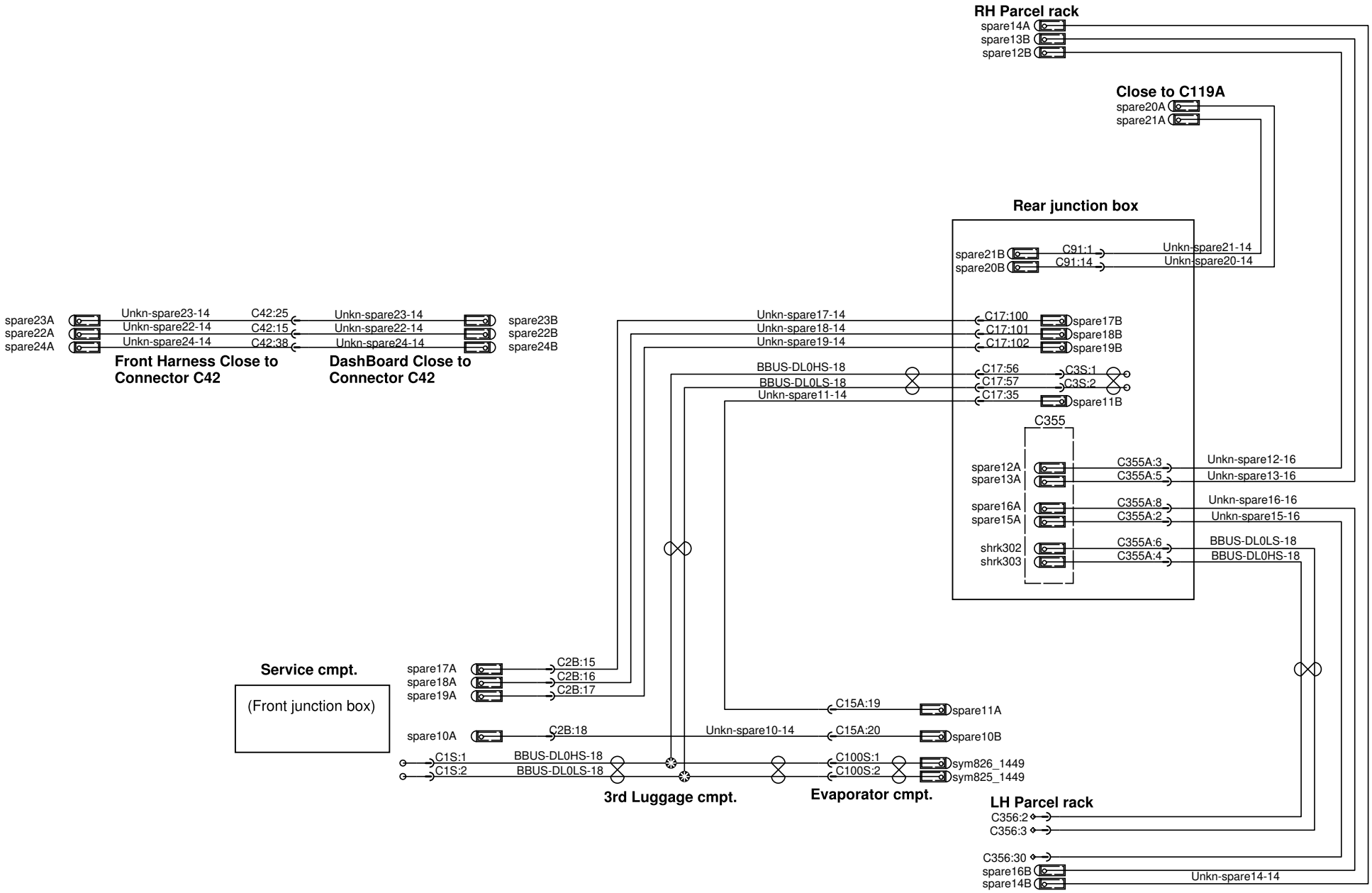

Horn

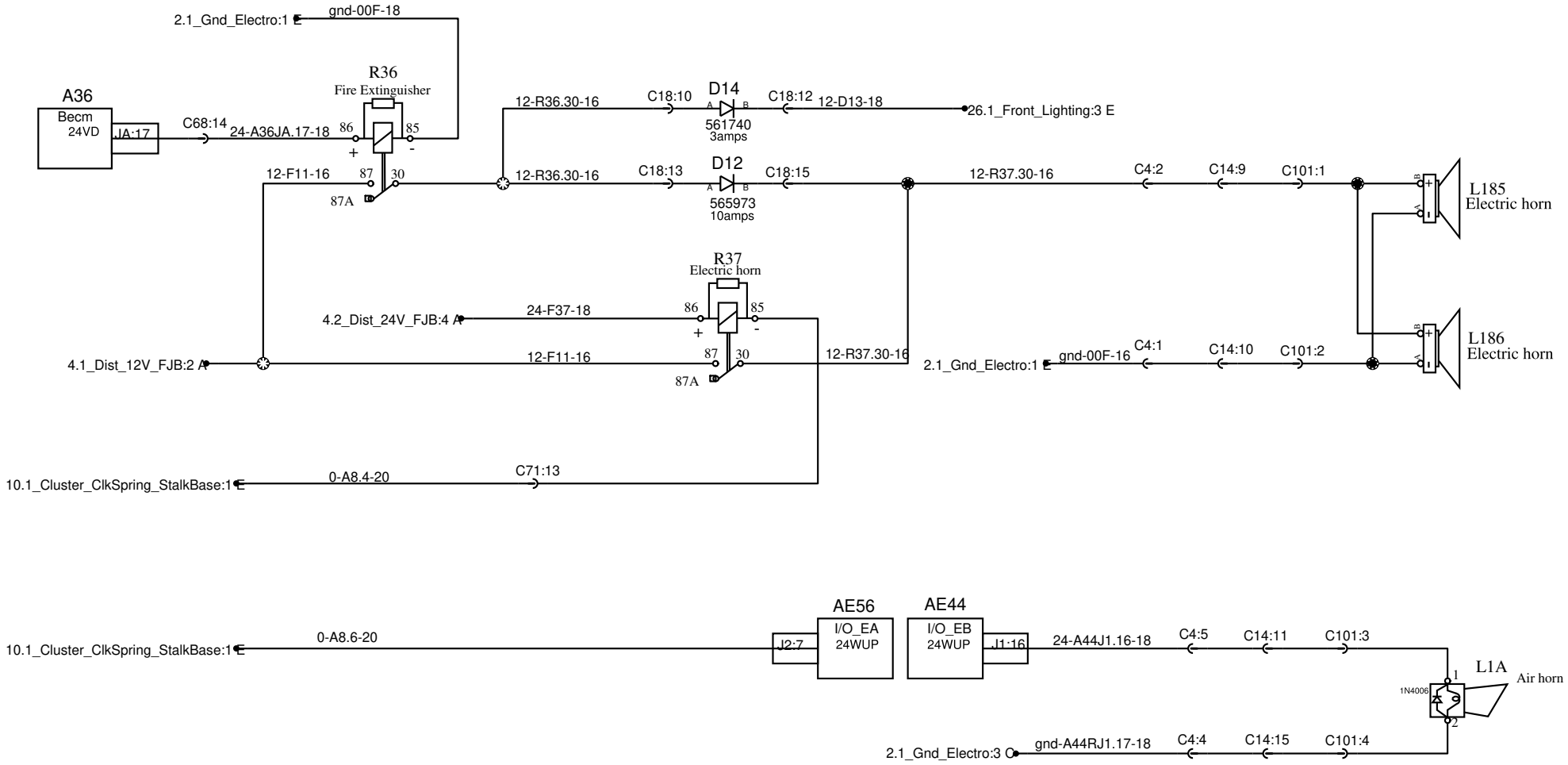

PREVOST®	WIRING DIAGRAM	No:D062140	Page:9.1	Rev:3

Horn

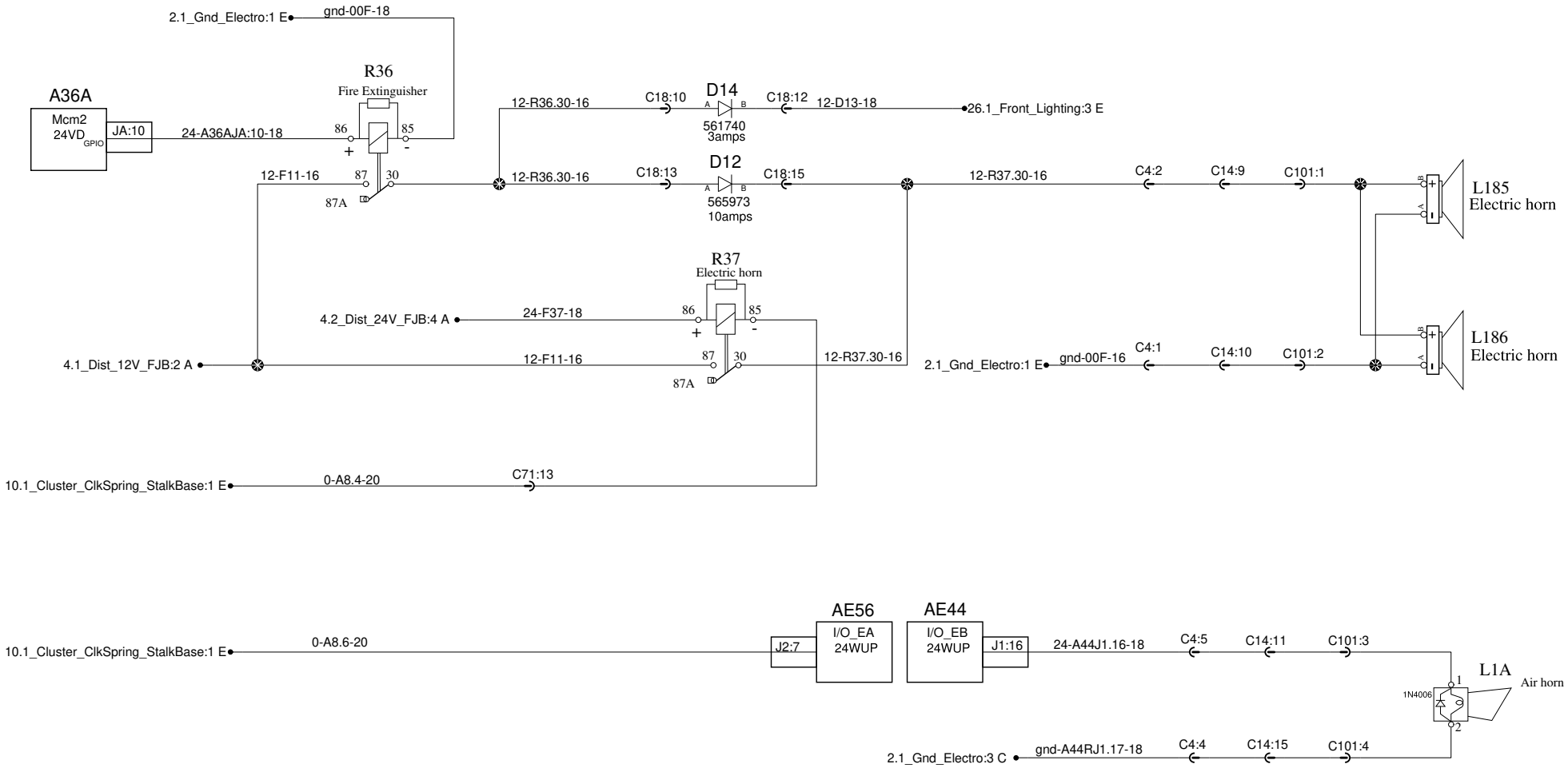

PREVOST®	WIRING DIAGRAM	No:D062140	Page:9.1	Rev:9

Cluster, Stalk Arm and SWS

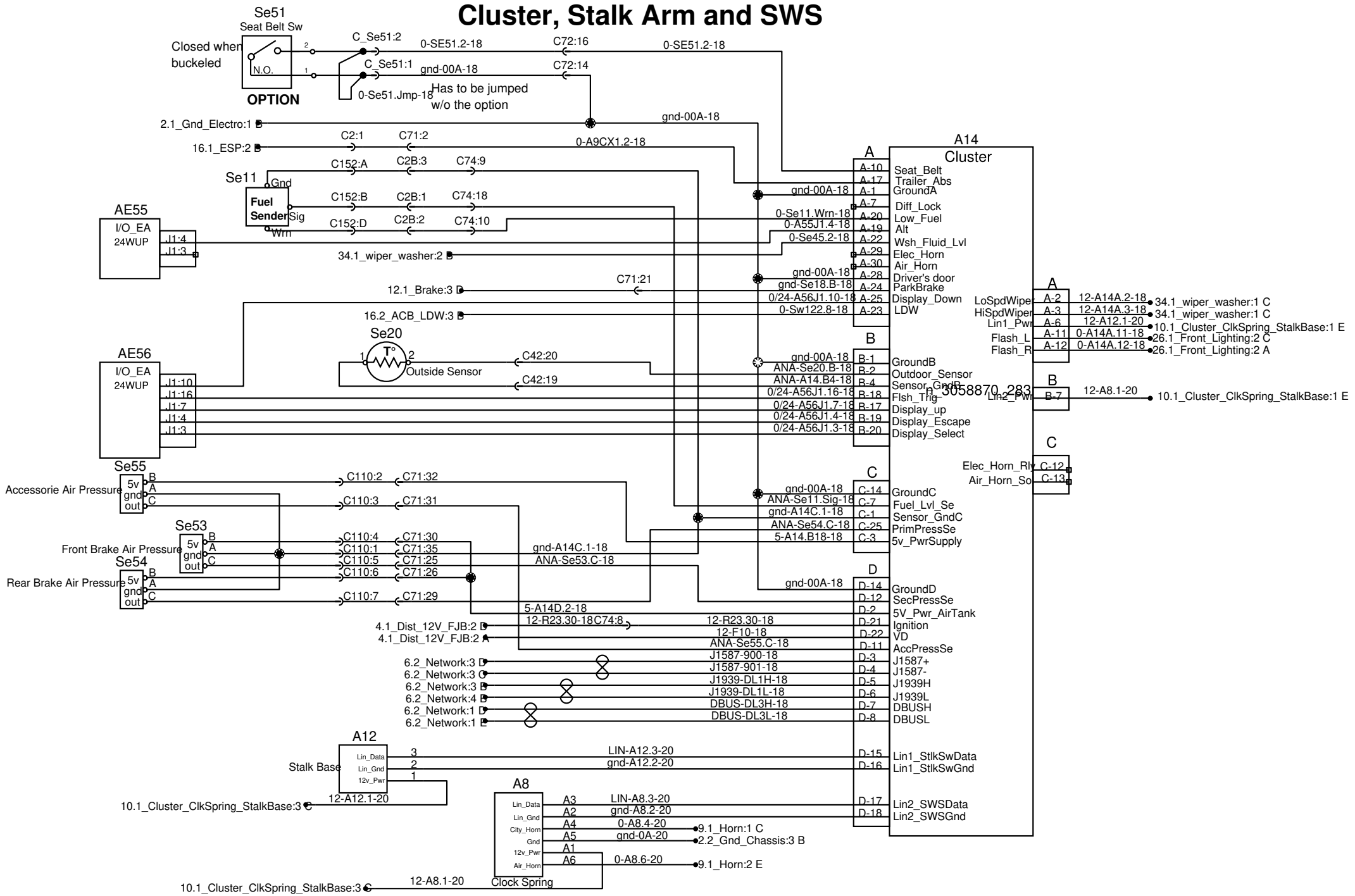

PREVOST®	WIRING DIAGRAM	No:D062140	Page:10.1	Rev:3

Cluster, Stalk Arm and SWS

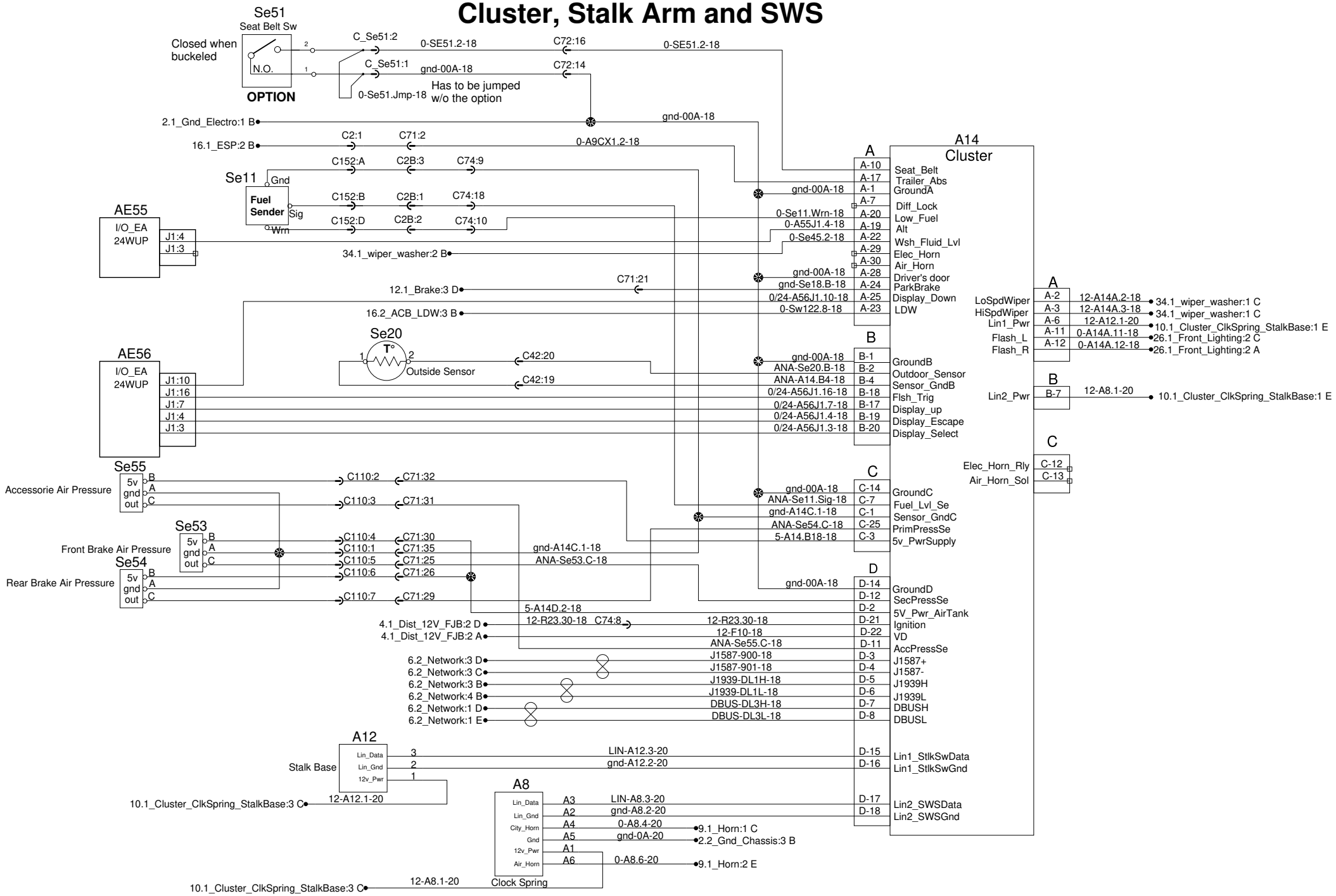

PREVOST®	WIRING DIAGRAM	No:D062140	Page:10.1	Rev:6

Lavatory and No Smoking sign

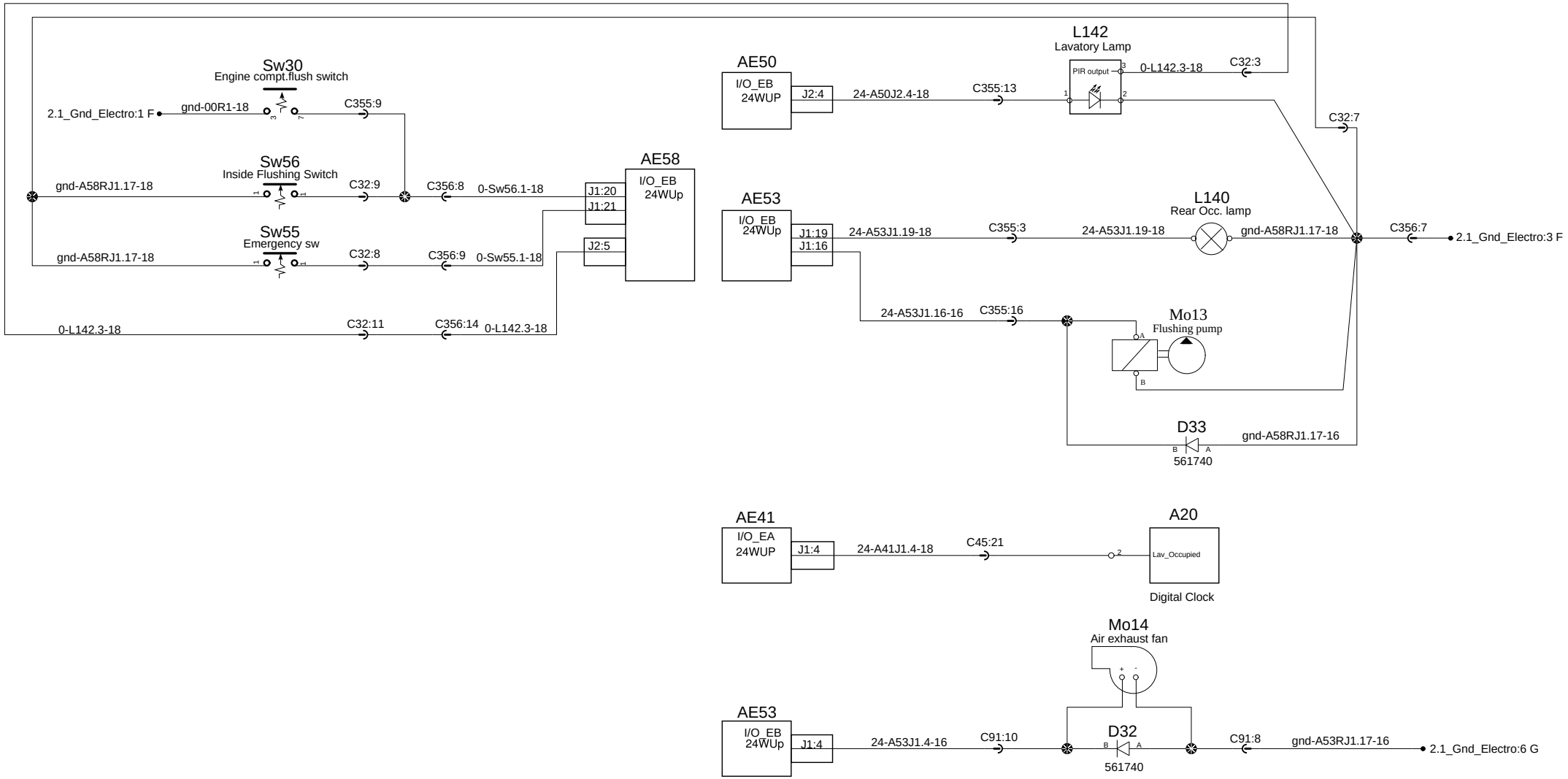

PREVOST®	WIRING DIAGRAM	No:D062140	Page:11.1	Rev:0

Brake, Engine brake and Retarder

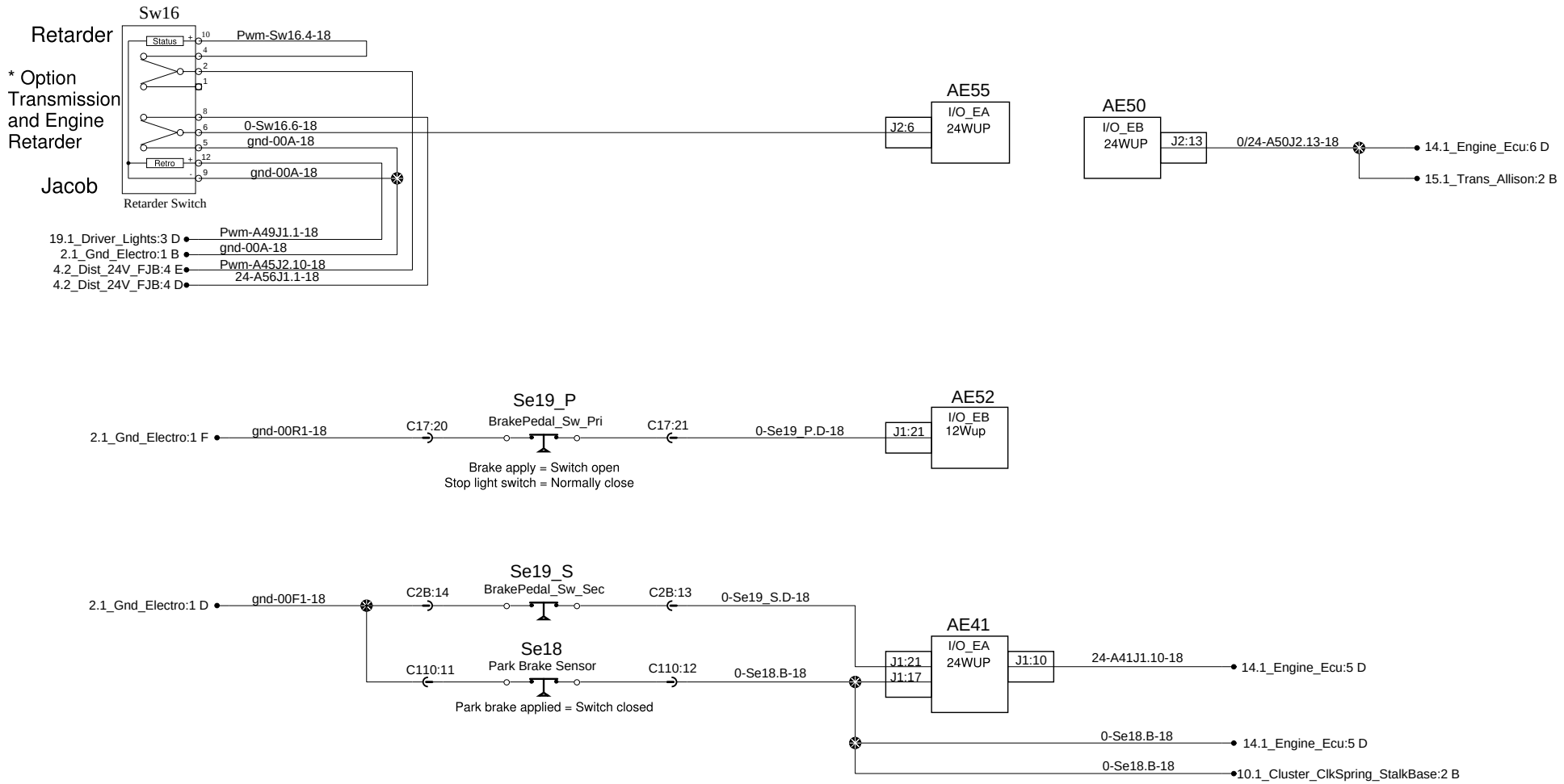

Trailler park brake

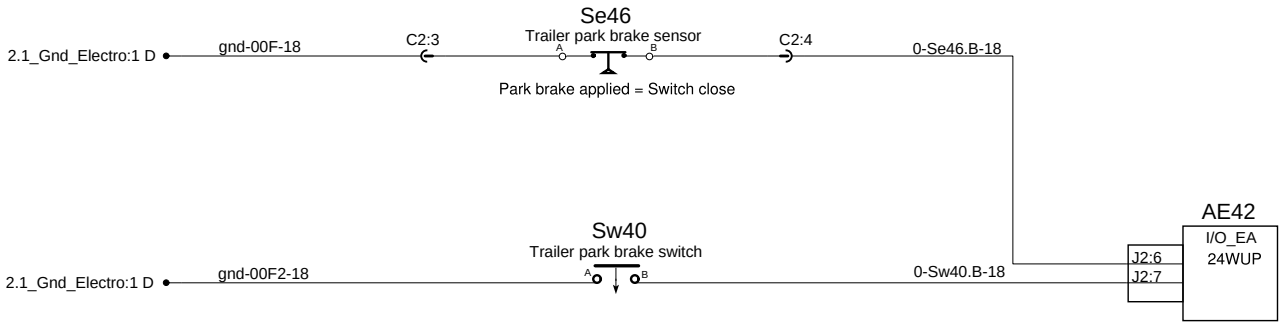

Electric fans drive

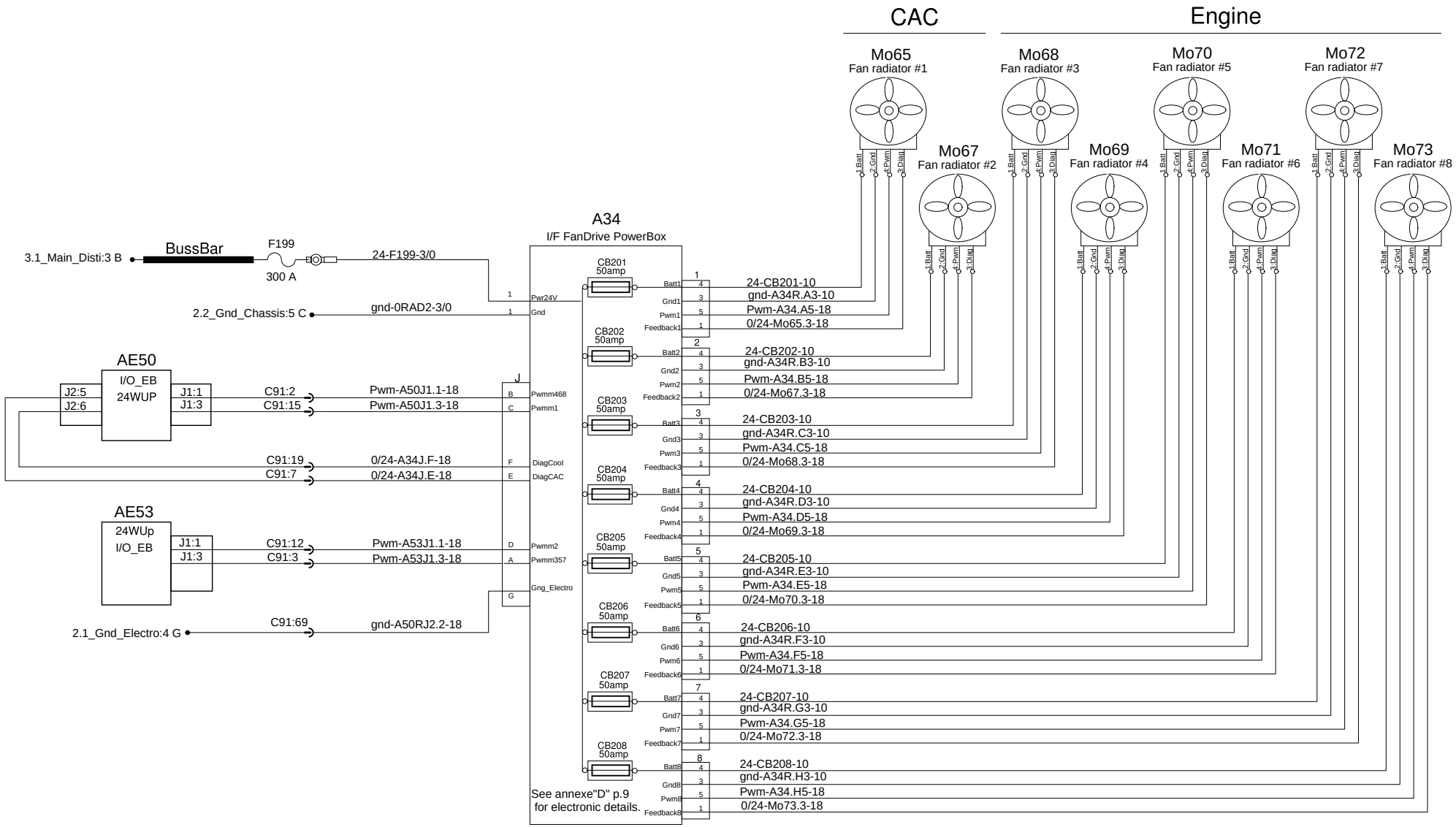

PREVOST®	WIRING DIAGRAM	No:D062140	Page:13.1	Rev:0

Engine ECU Volvo

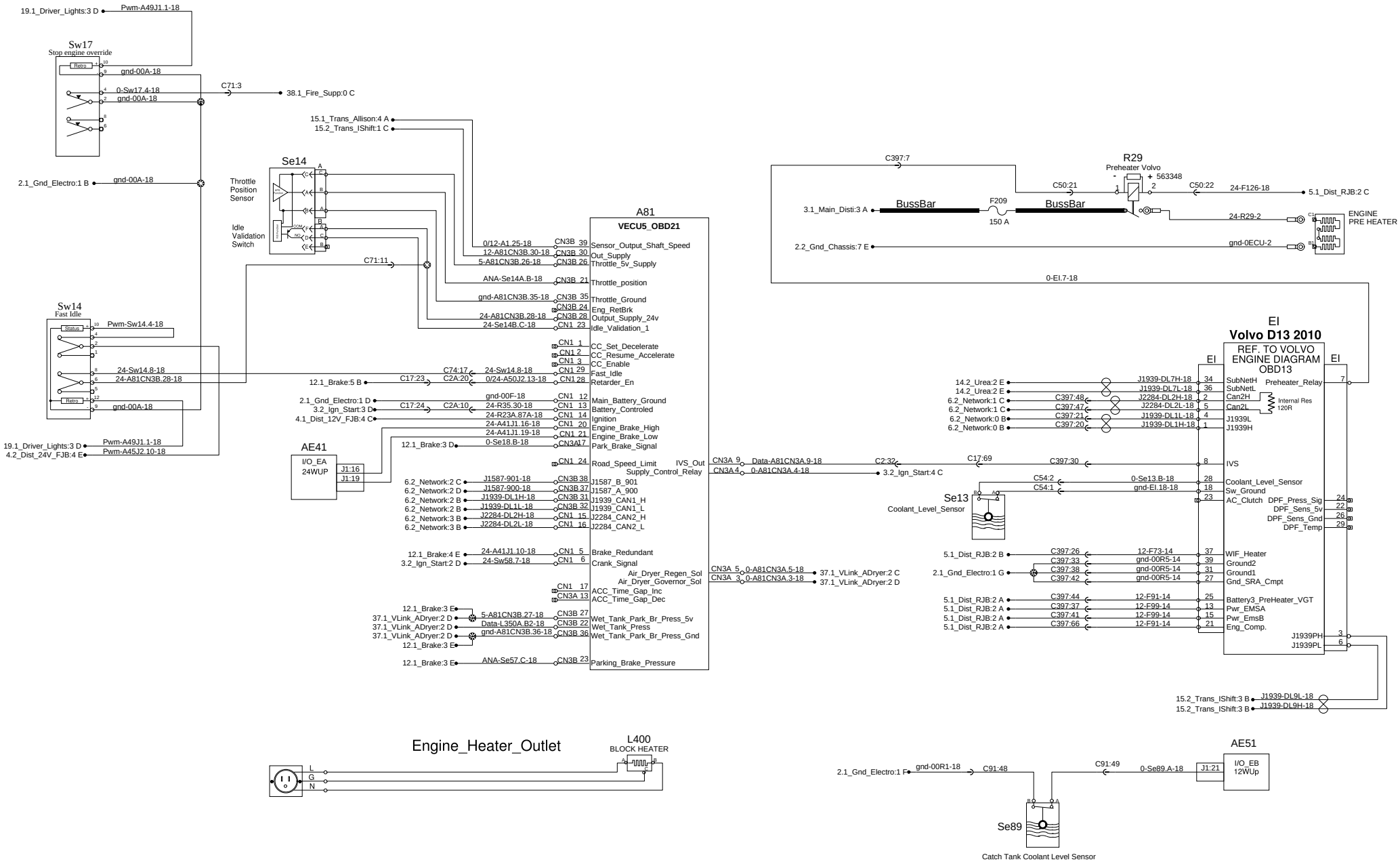

Rev:0

Page:14.1

No:D062140

WIRING DIAGRAM

PREVOST

Engine ECU Volvo

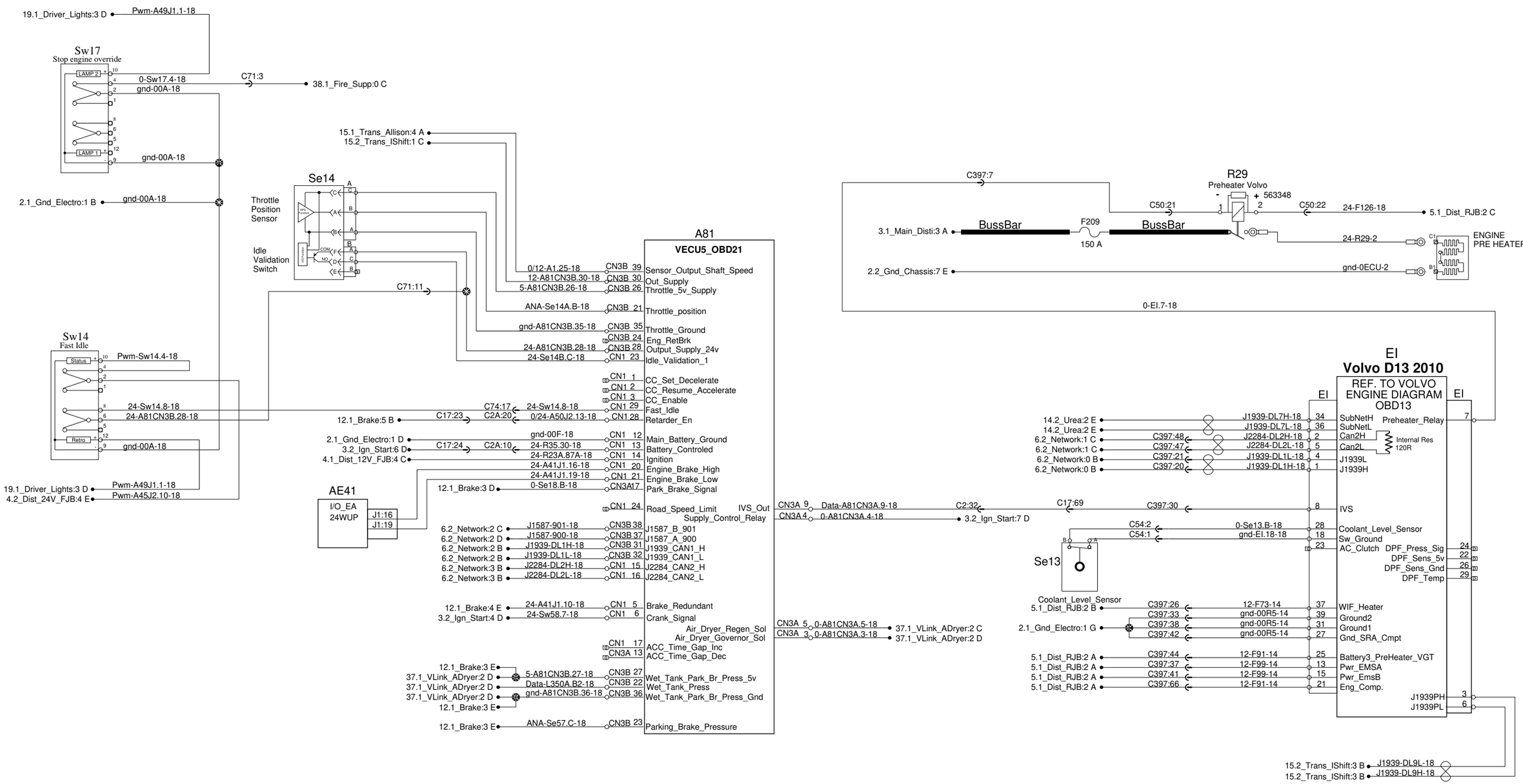

Rev:6

Page:14.1

No:D062140

WIRING DIAGRAM

PREVOST®

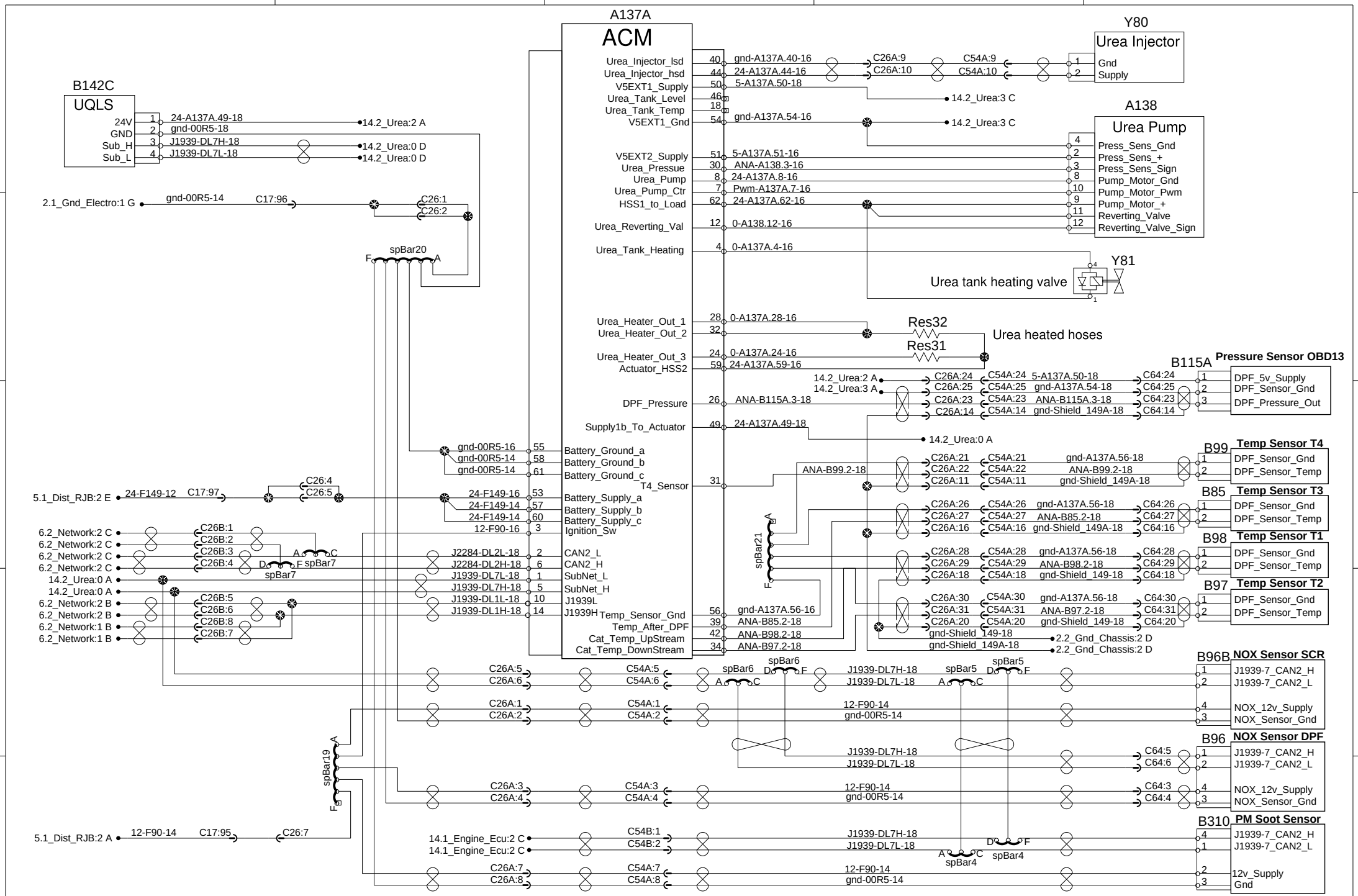
A137A
ACM
B142C
UQLS
24V
GND
Sub_H
Sub_L
24-A137A.49-18
gnd-00R5-18
J1939-DL7H-18
J1939-DL7L-18
14.2_Urea:2 A
14.2_Urea:0 D
14.2_Urea:0 D
2.1_Gnd_Electro:1 G
gnd-00R5-14
C17:96
C26:1
C26:2
spBar20
Urea_Injector_lsd
Urea_Injector_hsd
V5EXT1_Supply
Urea_Tank_Level
Urea_Tank_Temp
V5EXT1_Gnd
V5EXT2_Supply
Urea_Pressue
Urea_Pump
Urea_Pump_Ctr
HSS1_to_Load
Urea_Reverting_Val
Urea_Tank_Heating
Urea_Heater_Out_1
Urea_Heater_Out_2
Urea_Heater_Out_3
Actuator_HSS2
DPF_Pressure
Supply1b_To_Actuator
Battery_Ground_a
Battery_Ground_b
Battery_Ground_c
T4_Sensor
Battery_Supply_a
Battery_Supply_b
Battery_Supply_c
Ignition_Sw
CAN2_L
CAN2_H
SubNet_L
SubNet_H
J1939L
J1939H
Temp_Sensor_Gnd
Temp_After_DPF
Cat_Temp_UpStream
Cat_Temp_DownStream
gnd-A137A.40-16
24-A137A.44-16
5-A137A.50-18
gnd-A137A.54-16
5-A137A.51-16
ANA-A138.3-16
24-A137A.8-16
Pwm-A137A.7-16
24-A137A.62-16
0-A138.12-16
0-A137A.4-16
0-A137A.28-16
0-A137A.24-16
24-A137A.59-16
ANA-B115A.3-18
24-A137A.49-18
gnd-A137A.56-16
ANA-B85.2-18
ANA-B98.2-18
ANA-B97.2-18
C26A:9
C26A:10
C54A:9
C54A:10
Y80
Urea Injector
Gnd
Supply
A138
Urea Pump
Press_Sens_Gnd
Press_Sens_+
Press_Sens_Sign
Pump_Motor_Gnd
Pump_Motor_Pwm
Pump_Motor_+
Reverting_Valve
Reverting_Valve_Sign
Y81
Urea tank heating valve
Res32
Res31
Urea heated hoses
B115A
Pressure Sensor OBD13
DPF_5v_Supply
DPF_Sensor_Gnd
DPF_Pressure_Out
B99
Temp Sensor T4
DPF_Sensor_Gnd
DPF_Sensor_Temp
B85
Temp Sensor T3
DPF_Sensor_Gnd
DPF_Sensor_Temp
B98
Temp Sensor T1
DPF_Sensor_Gnd
DPF_Sensor_Temp
B97
Temp Sensor T2
DPF_Sensor_Gnd
DPF_Sensor_Temp
B96B
NOX Sensor SCR
J1939-7_CAN2_H
J1939-7_CAN2_L
NOX_12v_Supply
NOX_Sensor_Gnd
B96
NOX Sensor DPF
J1939-7_CAN2_H
J1939-7_CAN2_L
NOX_12v_Supply
NOX_Sensor_Gnd
B310
PM Soot Sensor
J1939-7_CAN2_H
J1939-7_CAN2_L
12v_Supply
Gnd
5.1_Dist_RJB:2 E
24-F149-12
C17:97
C26:4
C26:5
24-F149-16
24-F149-14
12-F90-16
J2284-DL2L-18
J2284-DL2H-18
J1939-DL7L-18
J1939-DL7H-18
J1939-DL1L-18
J1939-DL1H-18
6.2_Network:2 C
6.2_Network:2 B
6.2_Network:1 B
6.2_Network:1 B
C26B:1
C26B:2
C26B:3
C26B:4
C26B:5
C26B:6
C26B:8
C26B:7
spBar7
spBar21
spBar19
spBar6
spBar5
spBar4
12-F90-14
5.1_Dist_RJB:2 A
C17:95
C26:7
14.1_Engine_Ecu:2 C
C54B:1
C54B:2
C26A:7
C26A:8
C54A:7
C54A:8
2.2_Gnd_Chassis:2 D
PREVOST
WIRING DIAGRAM
No:D062140
Page:14.2
Rev:0

Transmission Alisson Gen 5

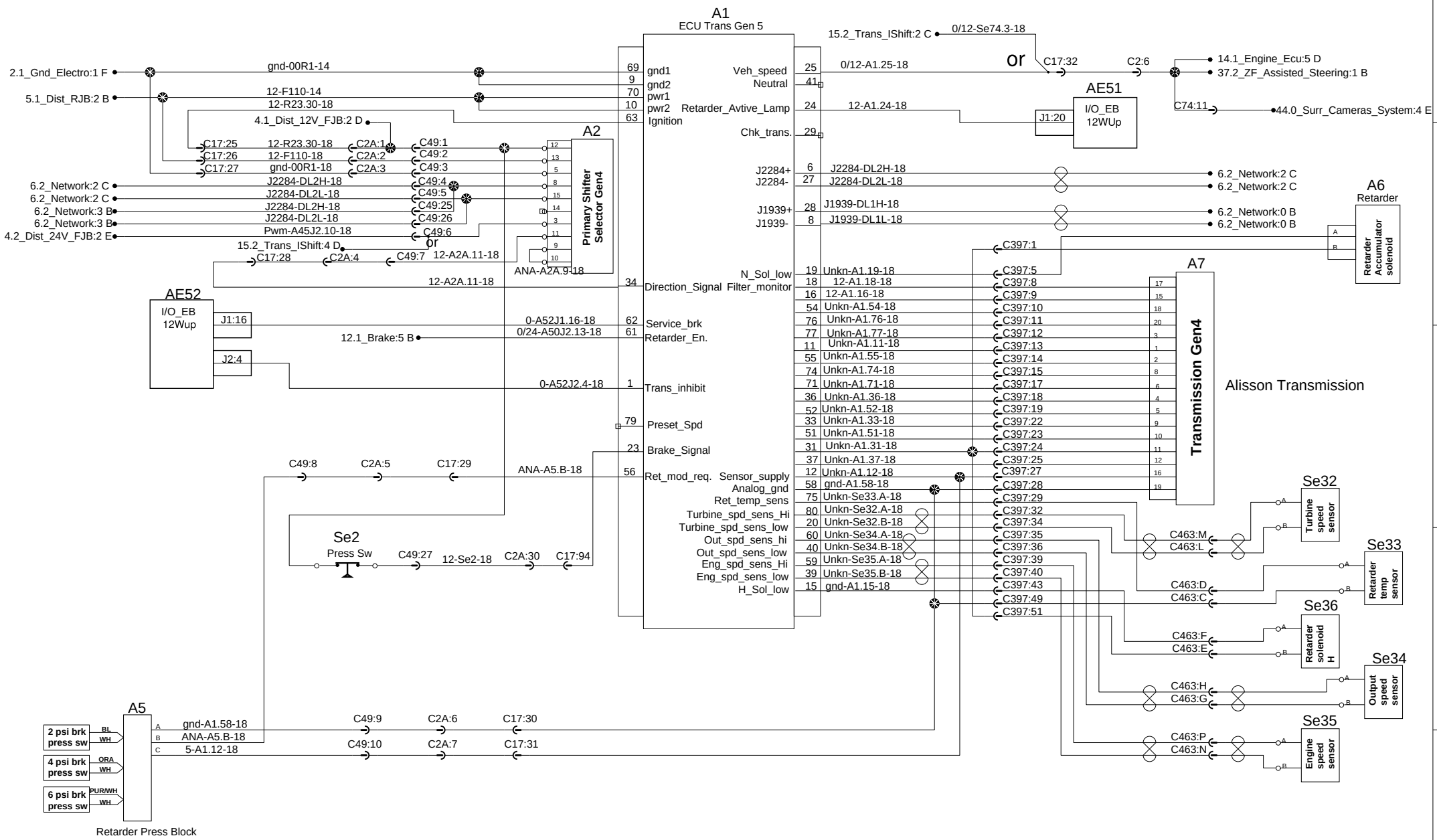

PREVOST®	WIRING DIAGRAM	No:D062140	Page:15.1	Rev:0

Transmission Alisson Gen 5

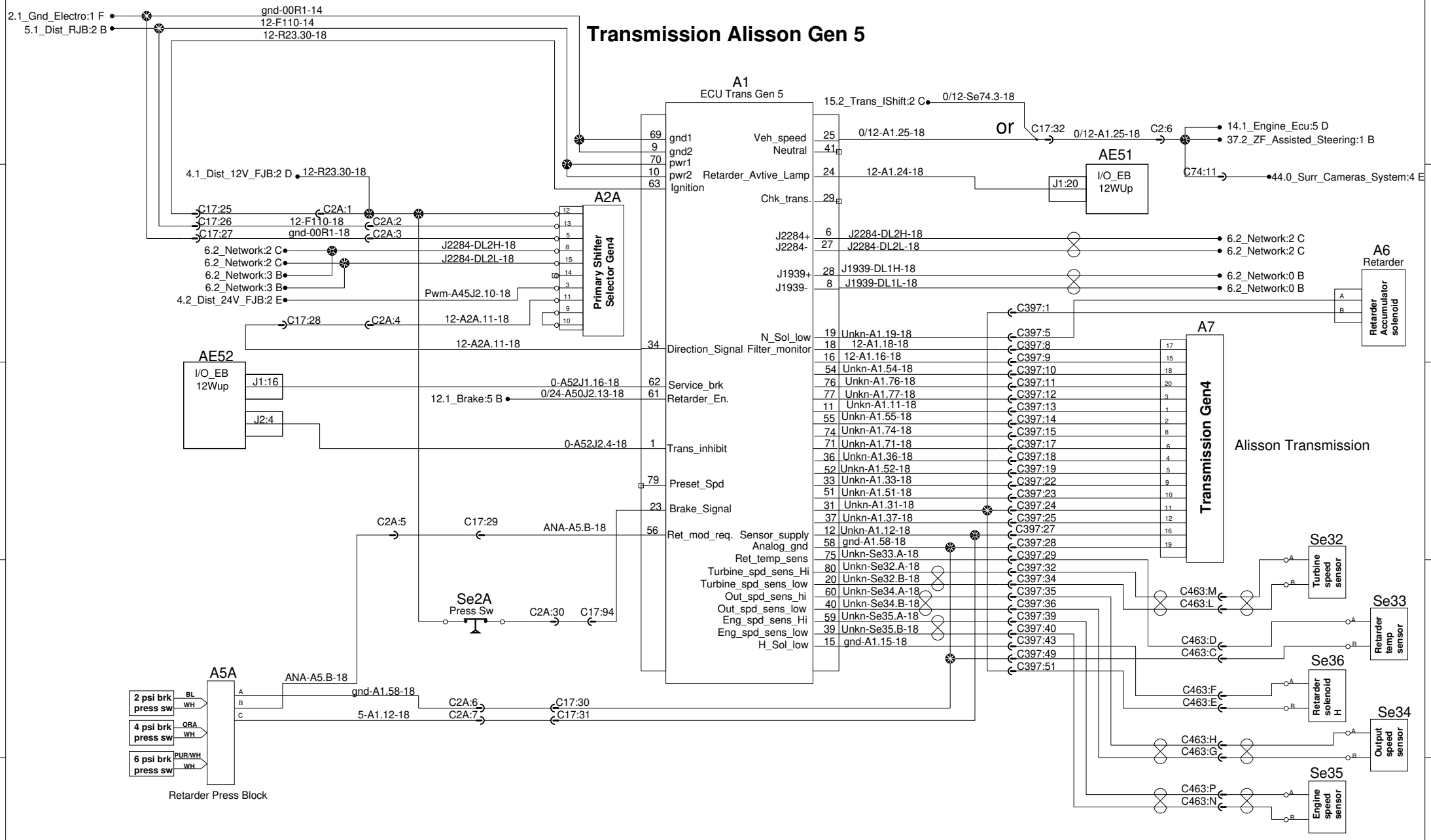

PREVOST®	WIRING DIAGRAM	No:D062140	Page:15.1	Rev:9

Transmission I_Shift

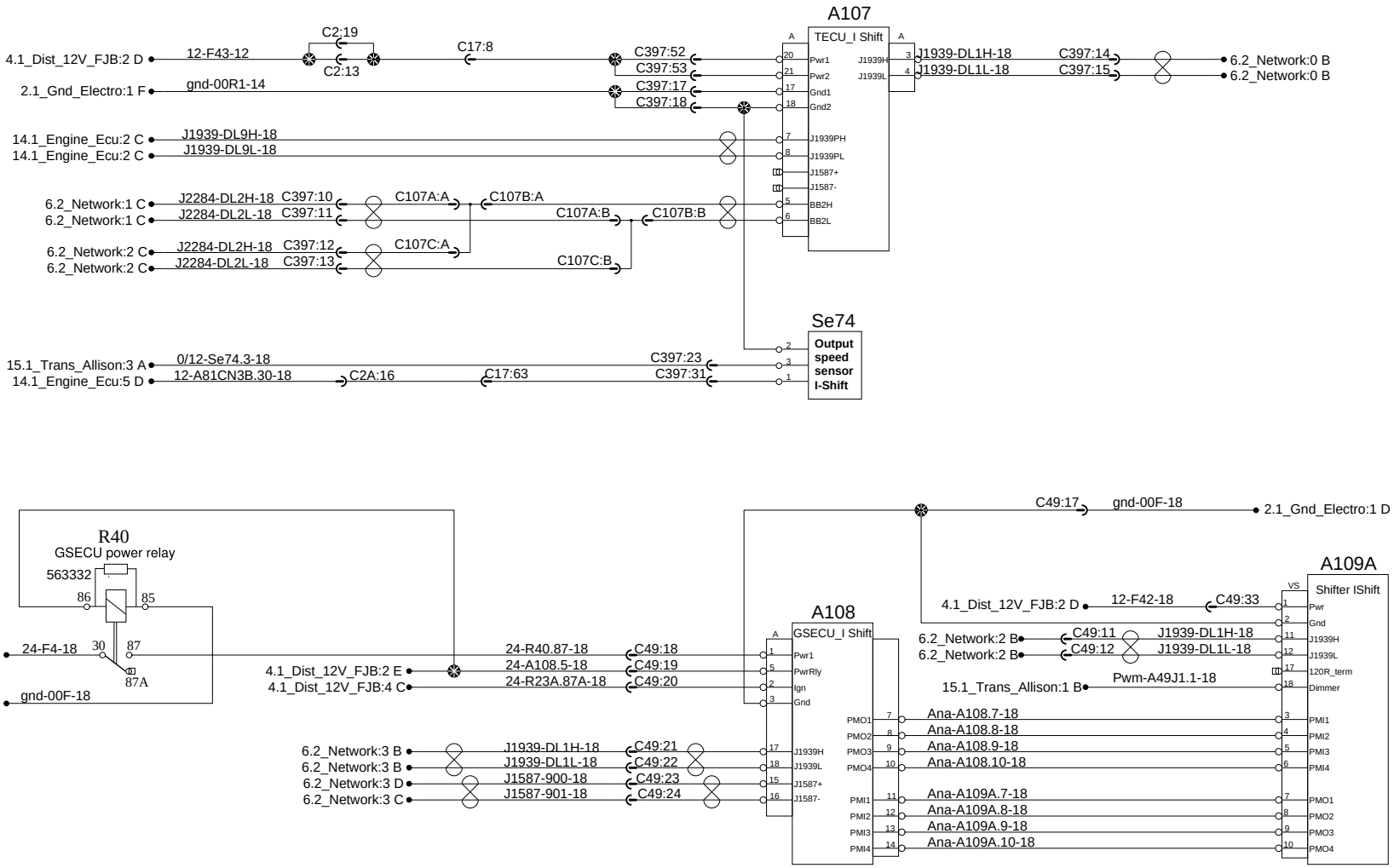

ESP

Electronic Stability Program

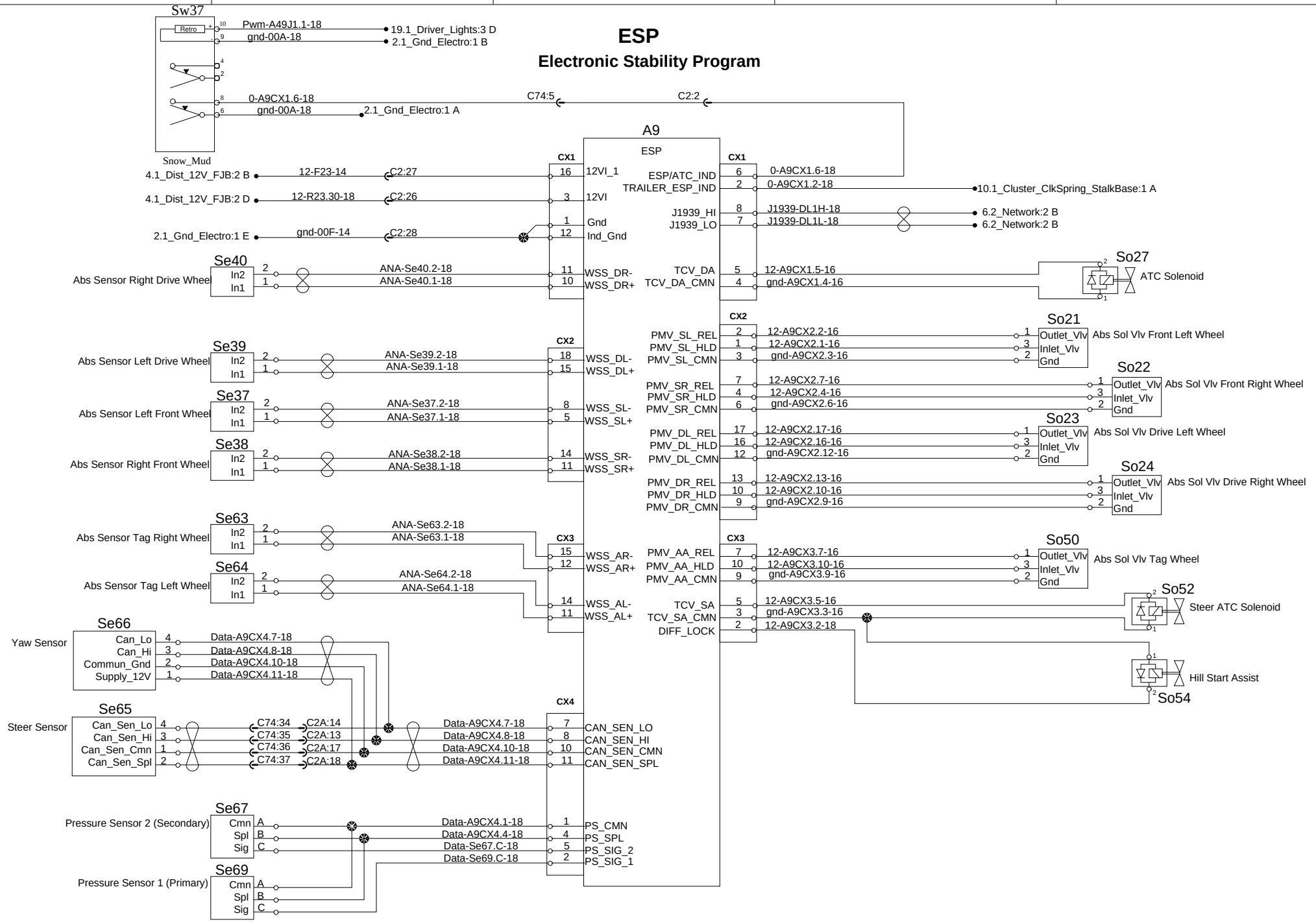

PREVOST®	WIRING DIAGRAM	No:D062140	Page:16.1	Rev:0

ACC & LDW

Adaptative cruise control breaking and Line departure warning

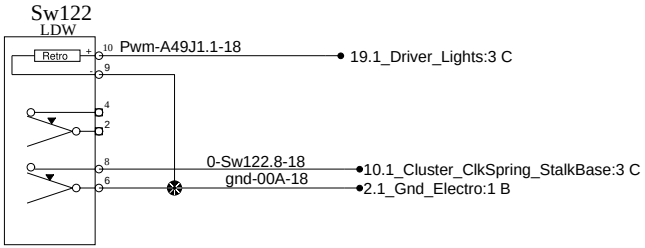

Forward collision warning

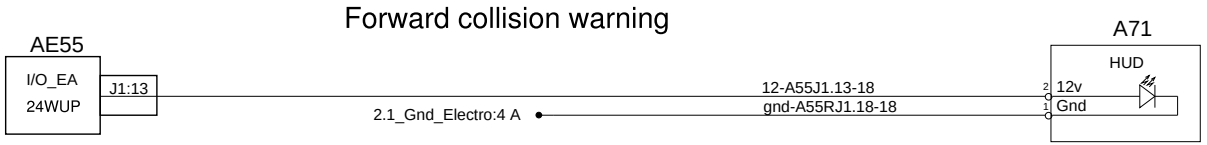

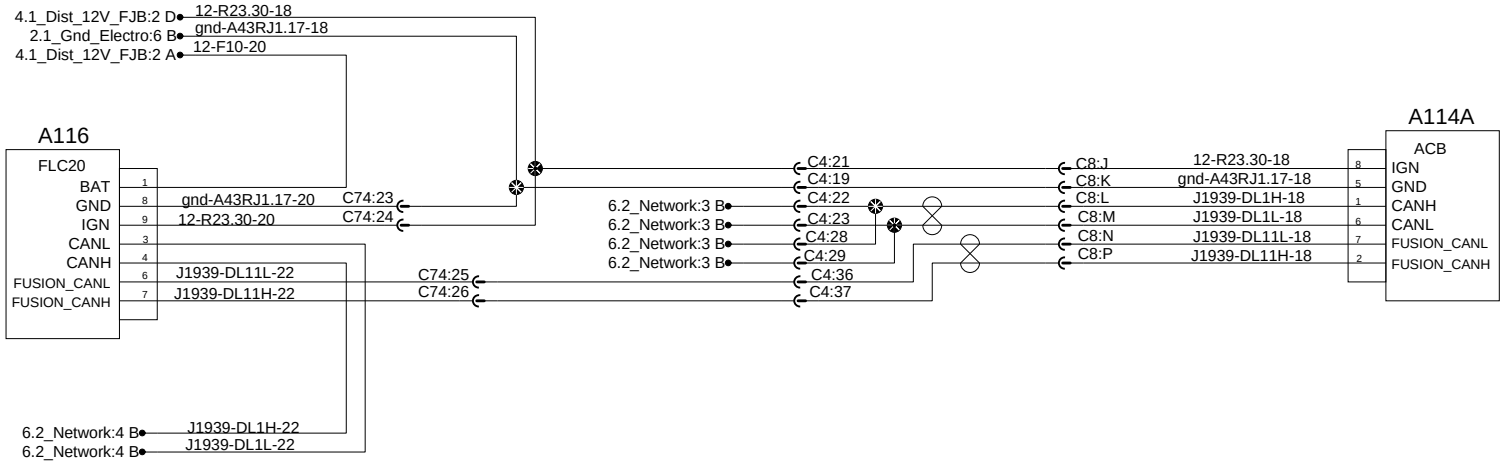

Water PreHeater (Spheros or Pro-Heat)

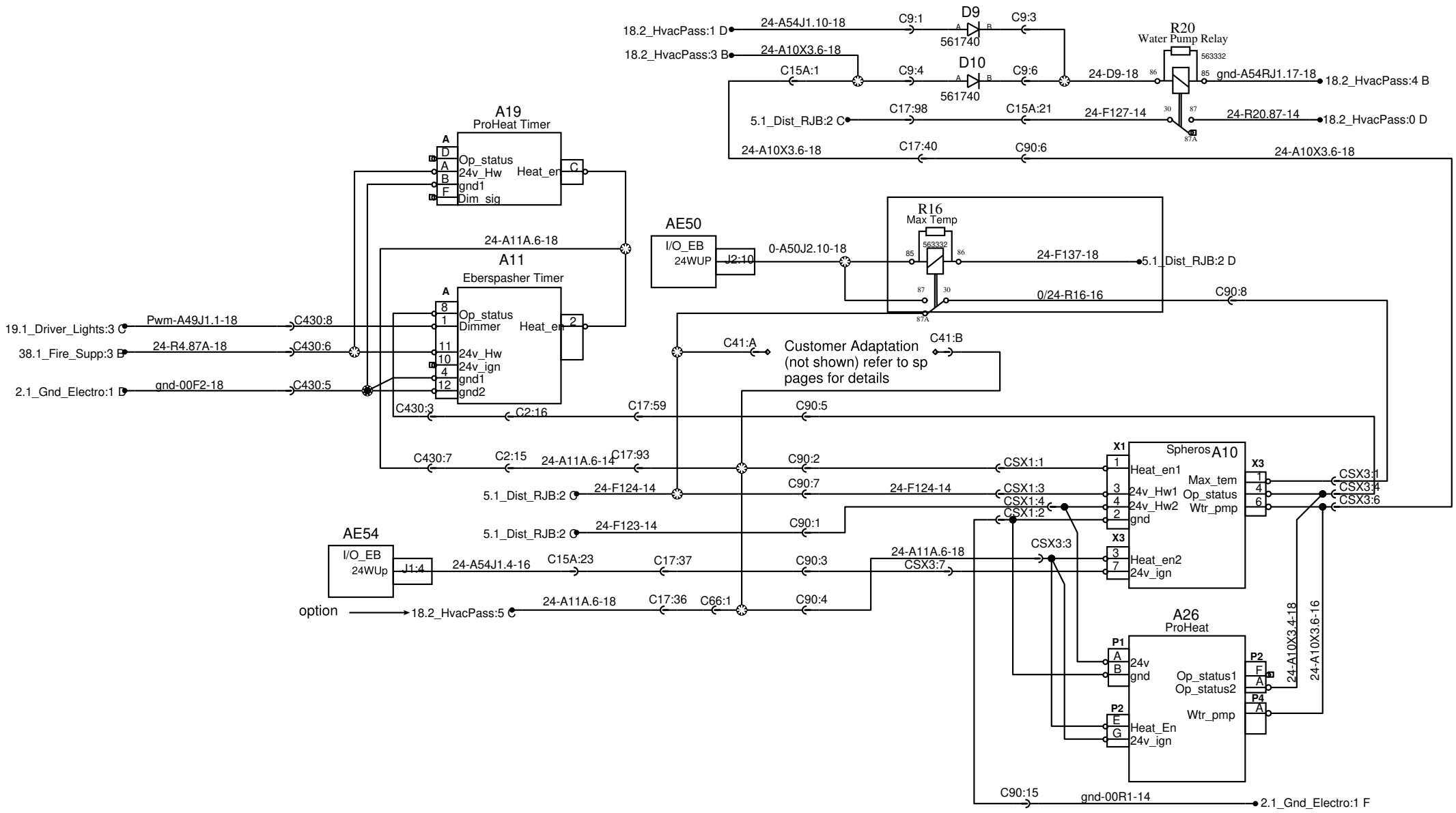

PREVOST®	WIRING DIAGRAM	No:D062140	Page:17.1	Rev:3

Water PreHeater System Forced
Customer Adaptation Offshore Heating Function

REFER TO P18.2 (STD) FOR ALL DETAILS

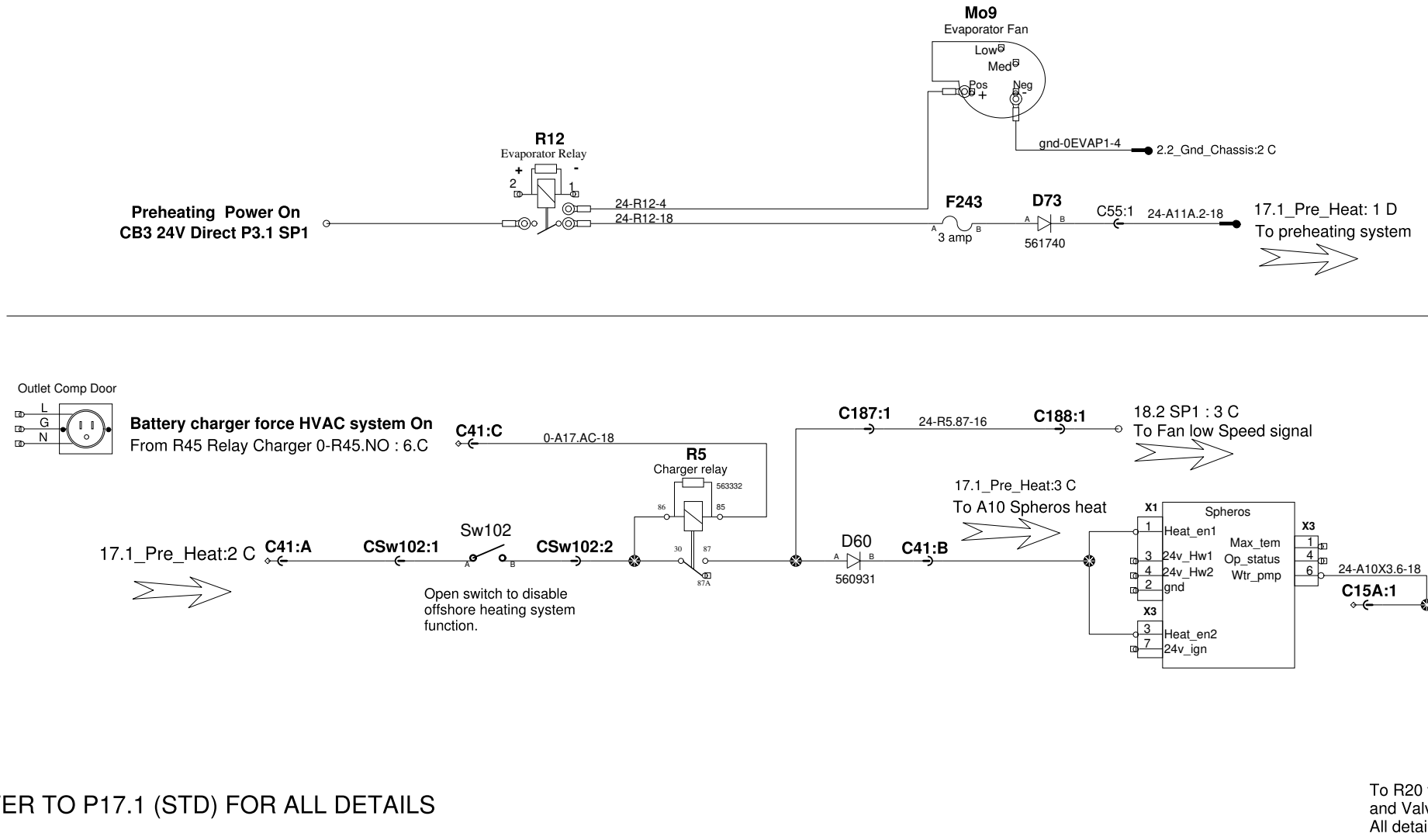

REFER TO P17.1 (STD) FOR ALL DETAILS

PREVOST®	WIRING DIAGRAM	No:D062140	Page:17.1 SP1	Rev:0

Indicator Light Pre Heating Keolis Option

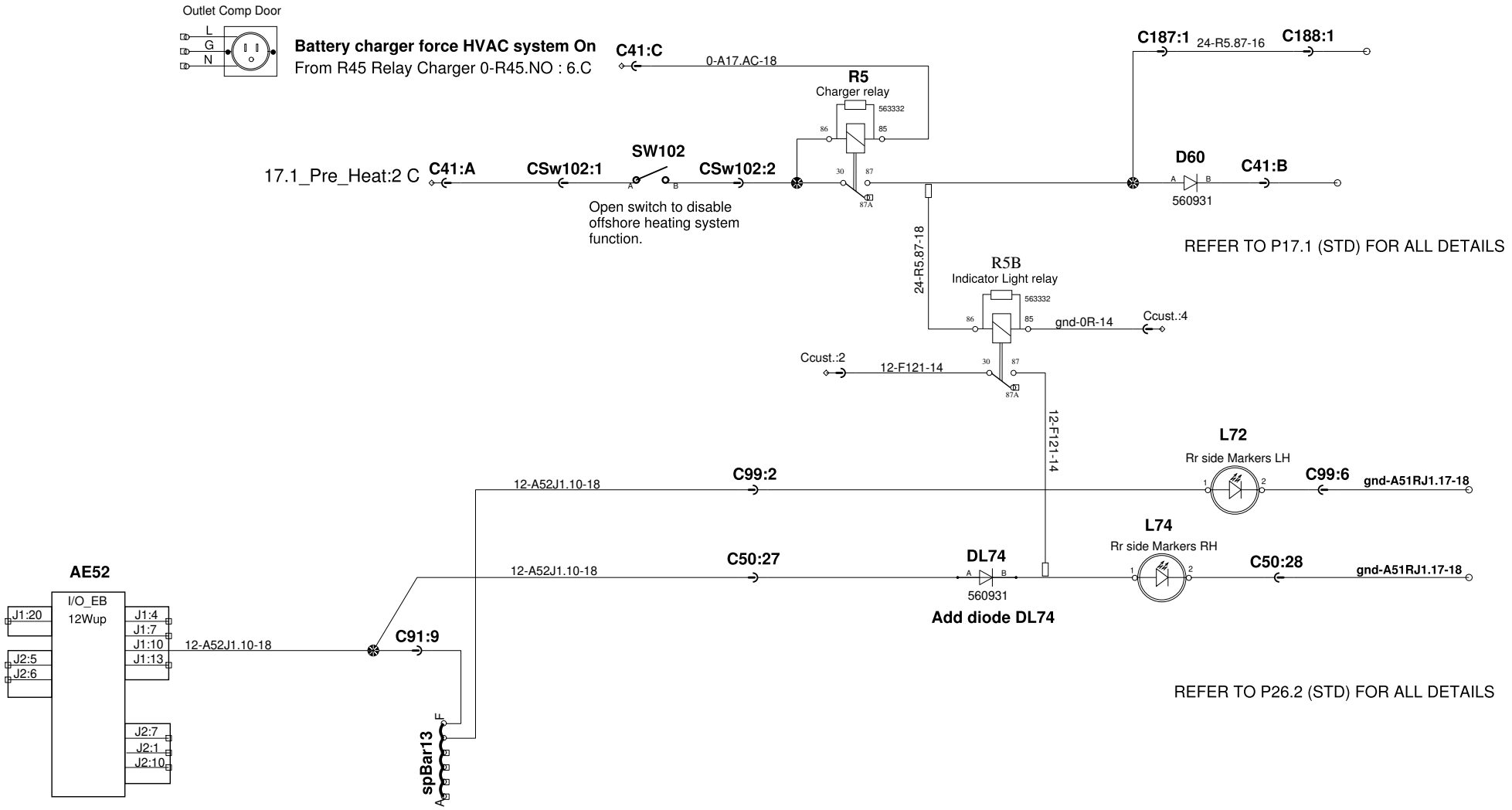

PREVOST®	WIRING DIAGRAM	No:D062140	Page:17.1 SP2	Rev:0

Water PreHeater (Spheros or Pro-Heat)

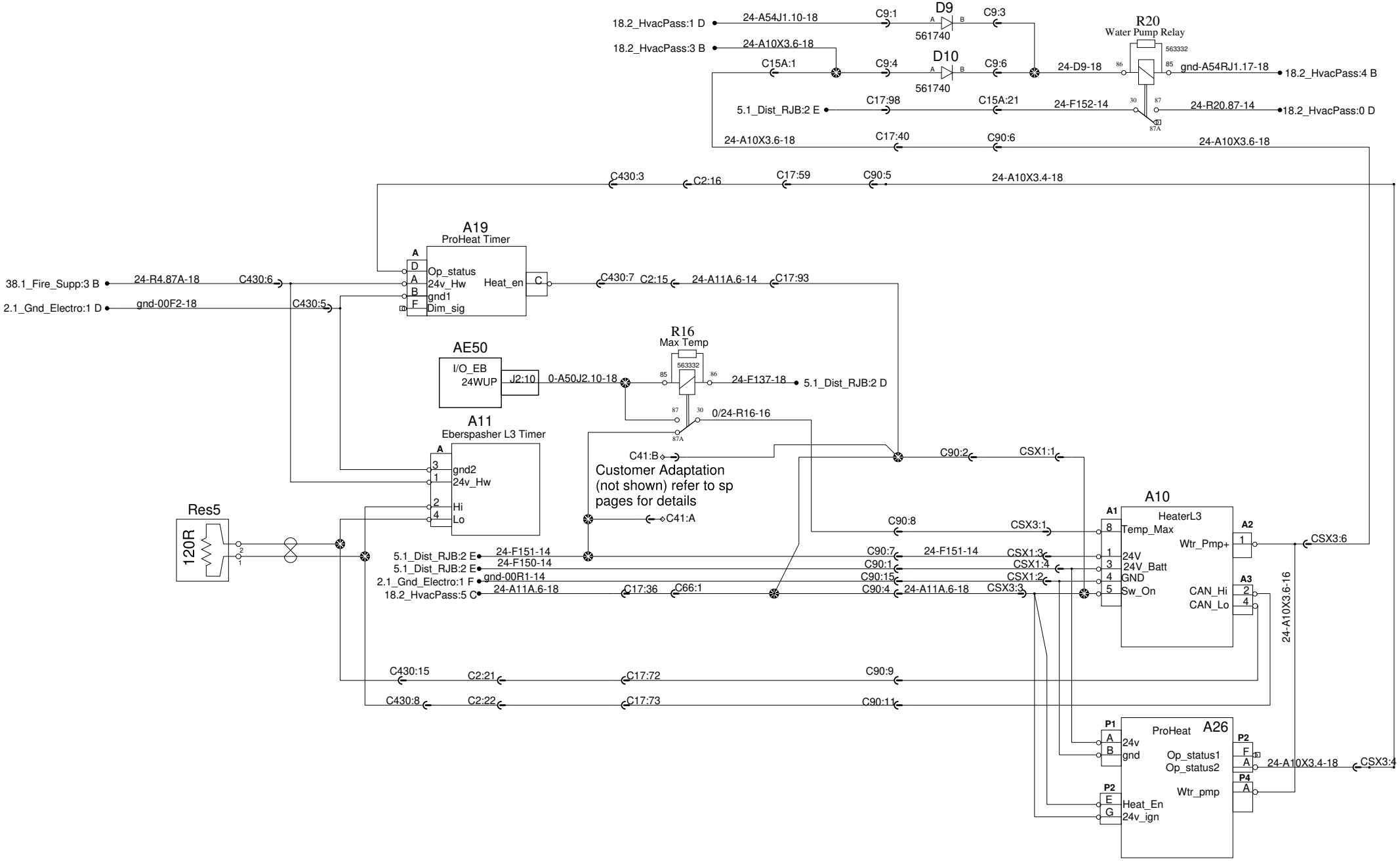

PREVOST®	WIRING DIAGRAM	No:D062140	Page:17.1	Rev:7

Water PreHeater System Forced
Customer Adaptation Offshore Heating Function

REFER TO P18.2 (STD) FOR ALL DETAILS

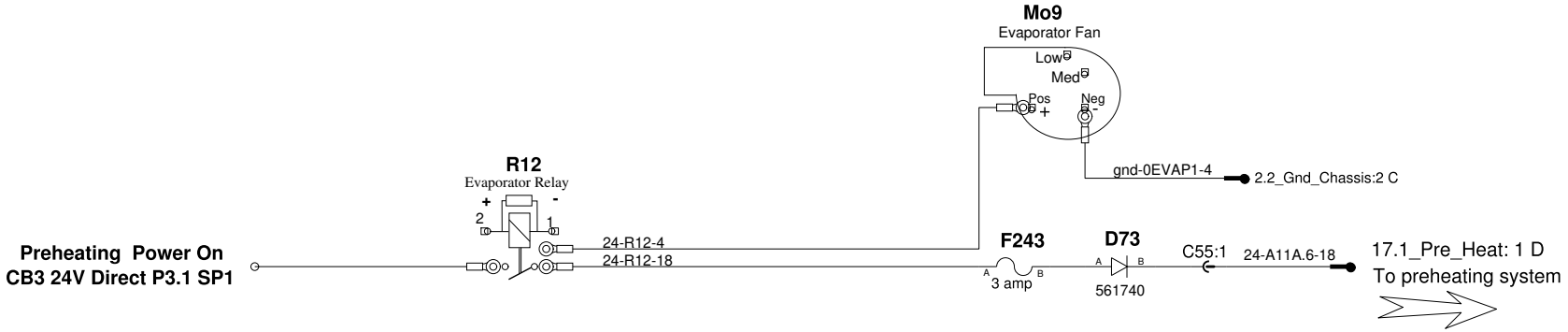

Battery charger force HVAC system On
From R45 Relay Charger 0-R45.NO : 6.C

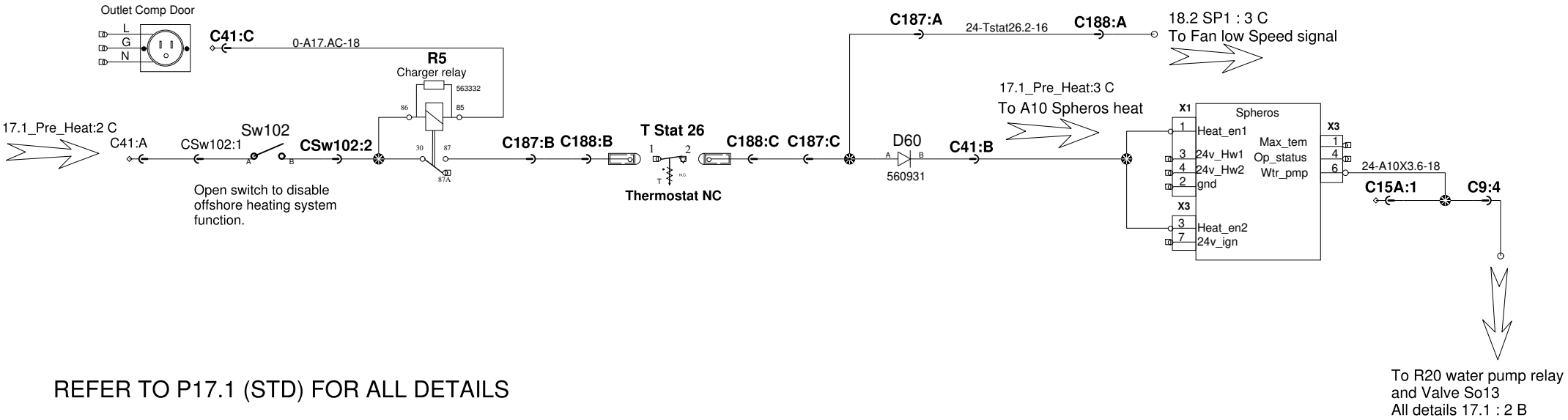

REFER TO P17.1 (STD) FOR ALL DETAILS

PREVOST®	WIRING DIAGRAM	No:D062140	Page:17.1 SP1	Rev:03

Indicator Light Pre Heating Keolis Option

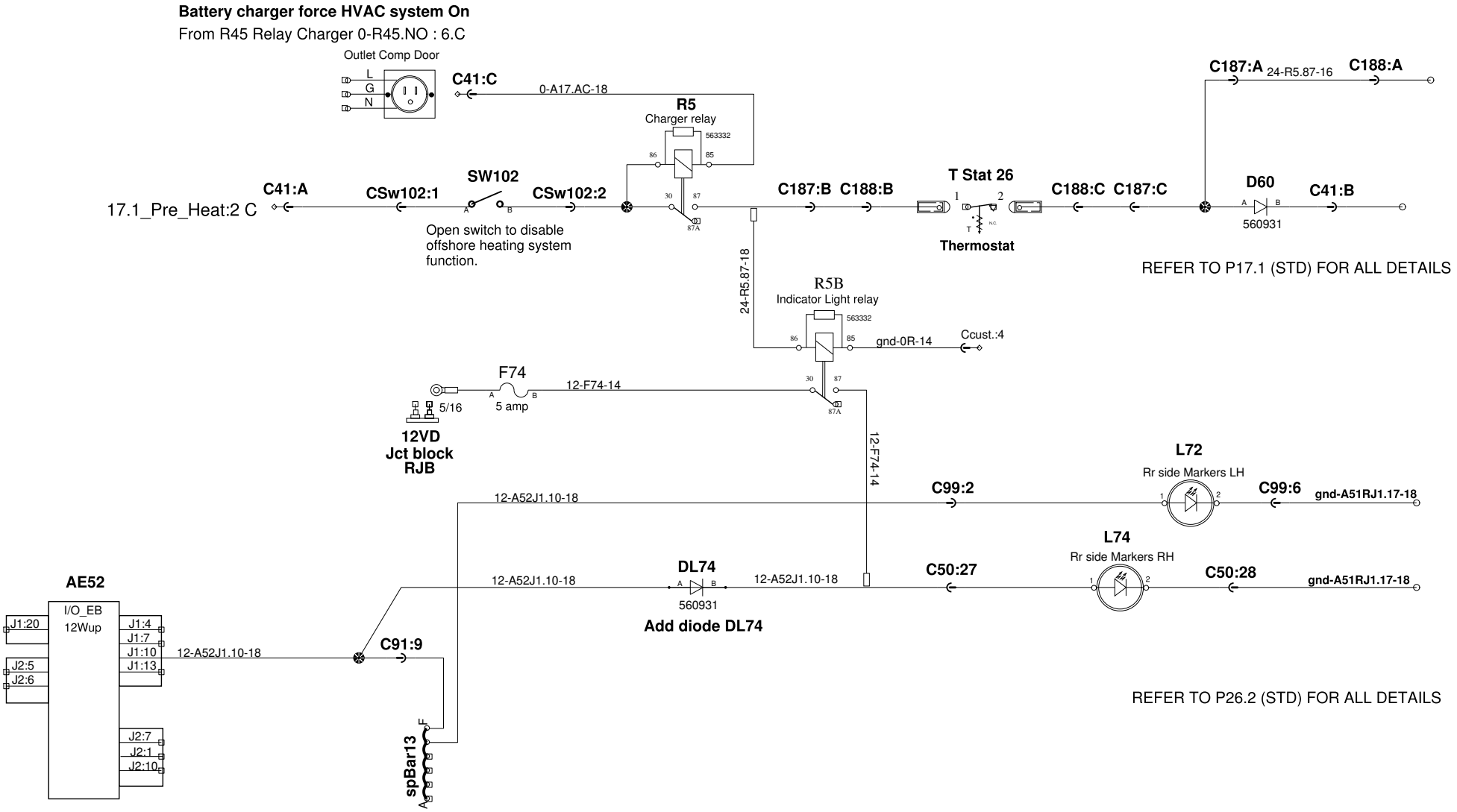

PREVOST®	WIRING DIAGRAM	No:D062140	Page:17.1 SP2	Rev:02

Indicator Light Pre Heating Keolis Option

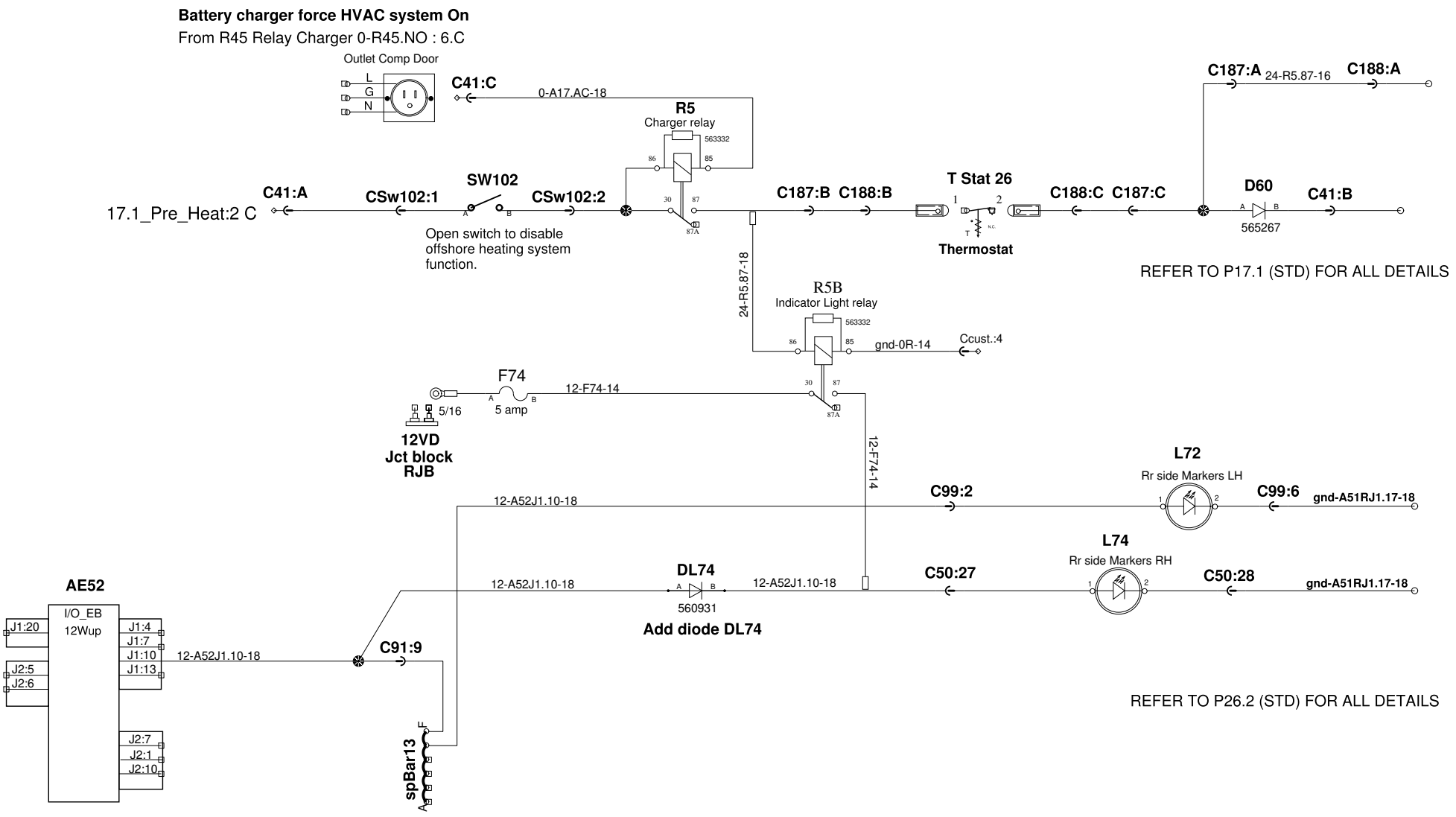

PREVOST®	WIRING DIAGRAM	No:D062140	Page:17.1 SP2	Rev:03

Hvac Defroster

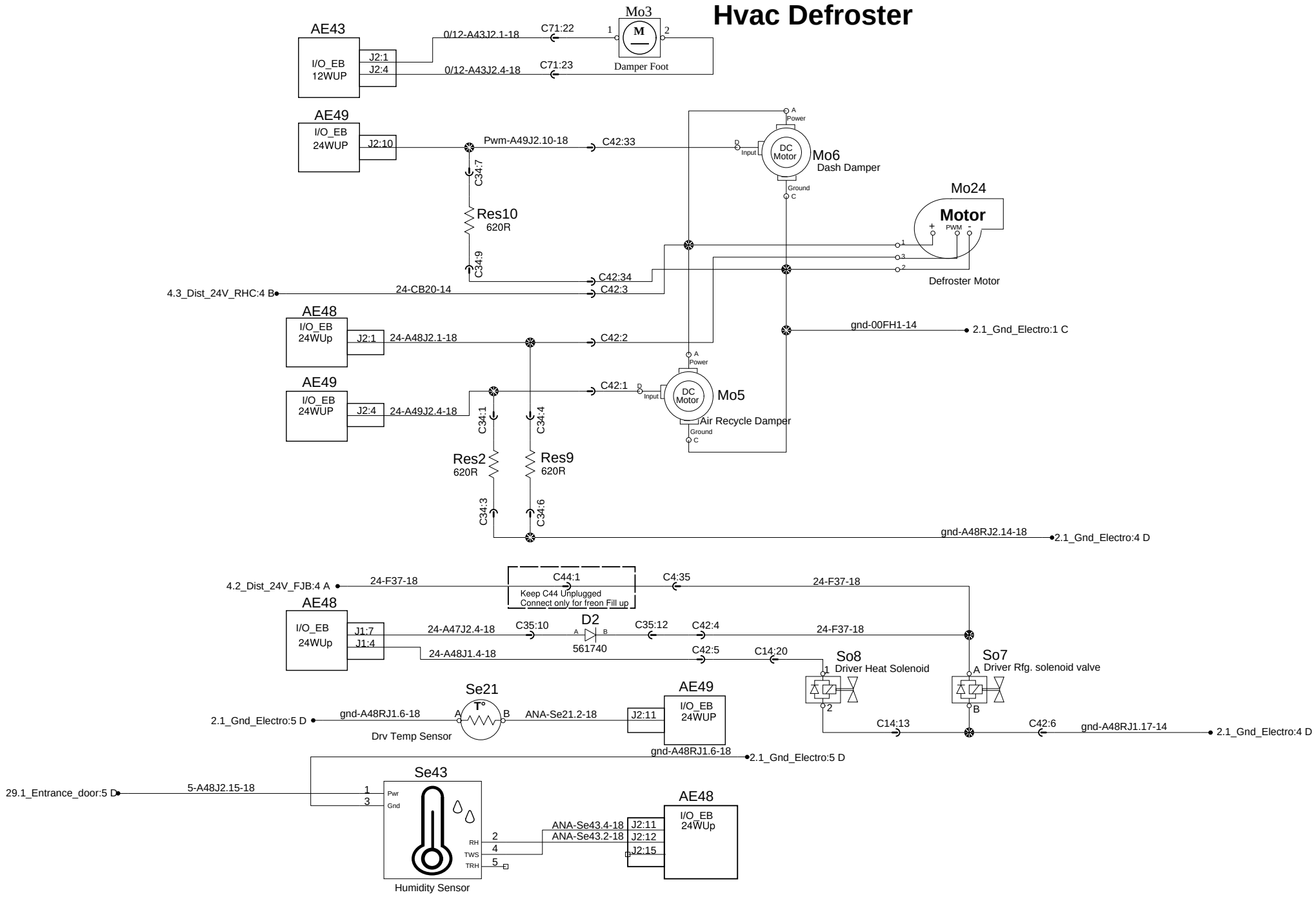

PREVOST®	WIRING DIAGRAM	No:D062140	Page:18.1	Rev:0

Hvac passengers

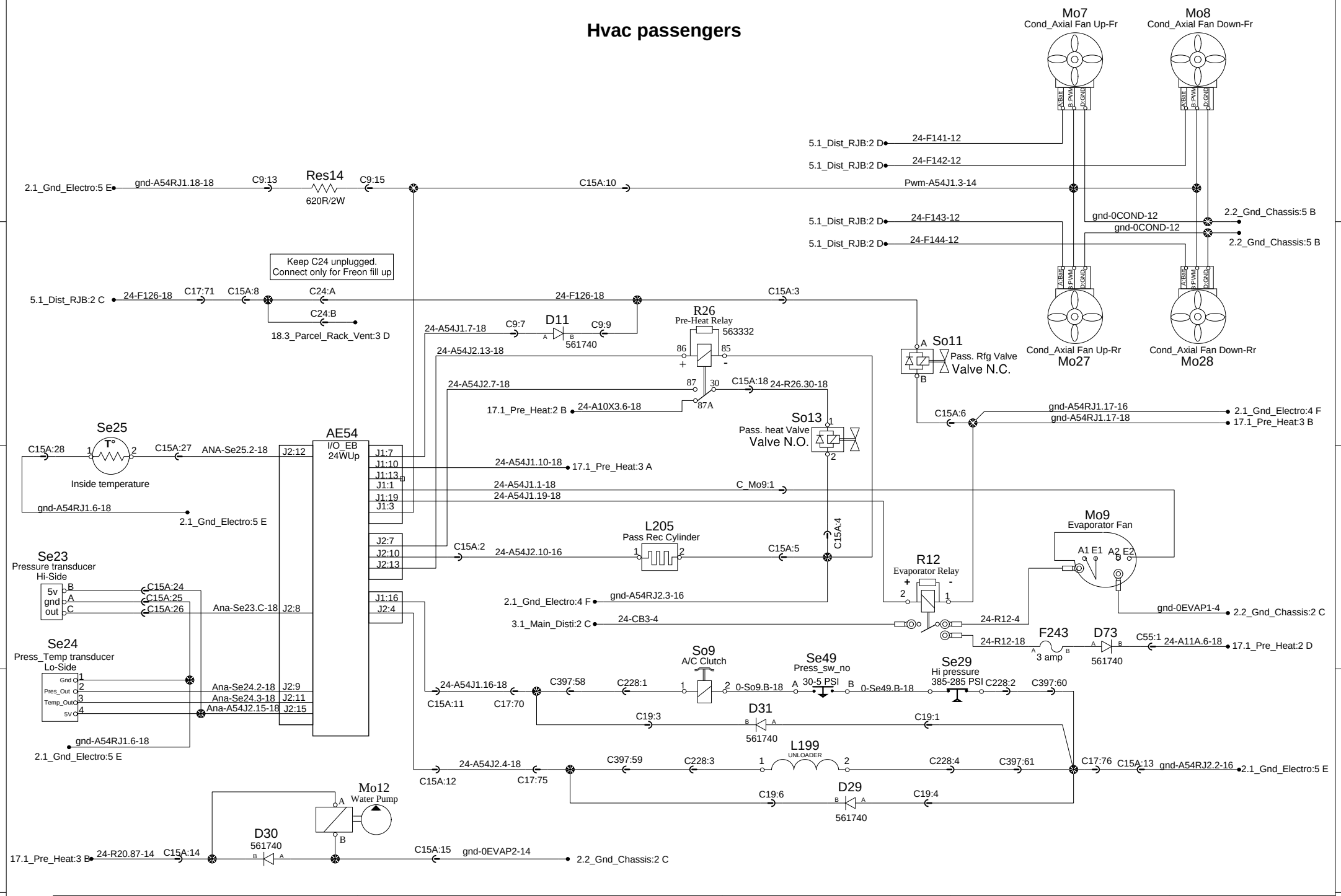

PREVOST®	WIRING DIAGRAM	No:D062140	Page:18.2	Rev:0

Hvac passengers

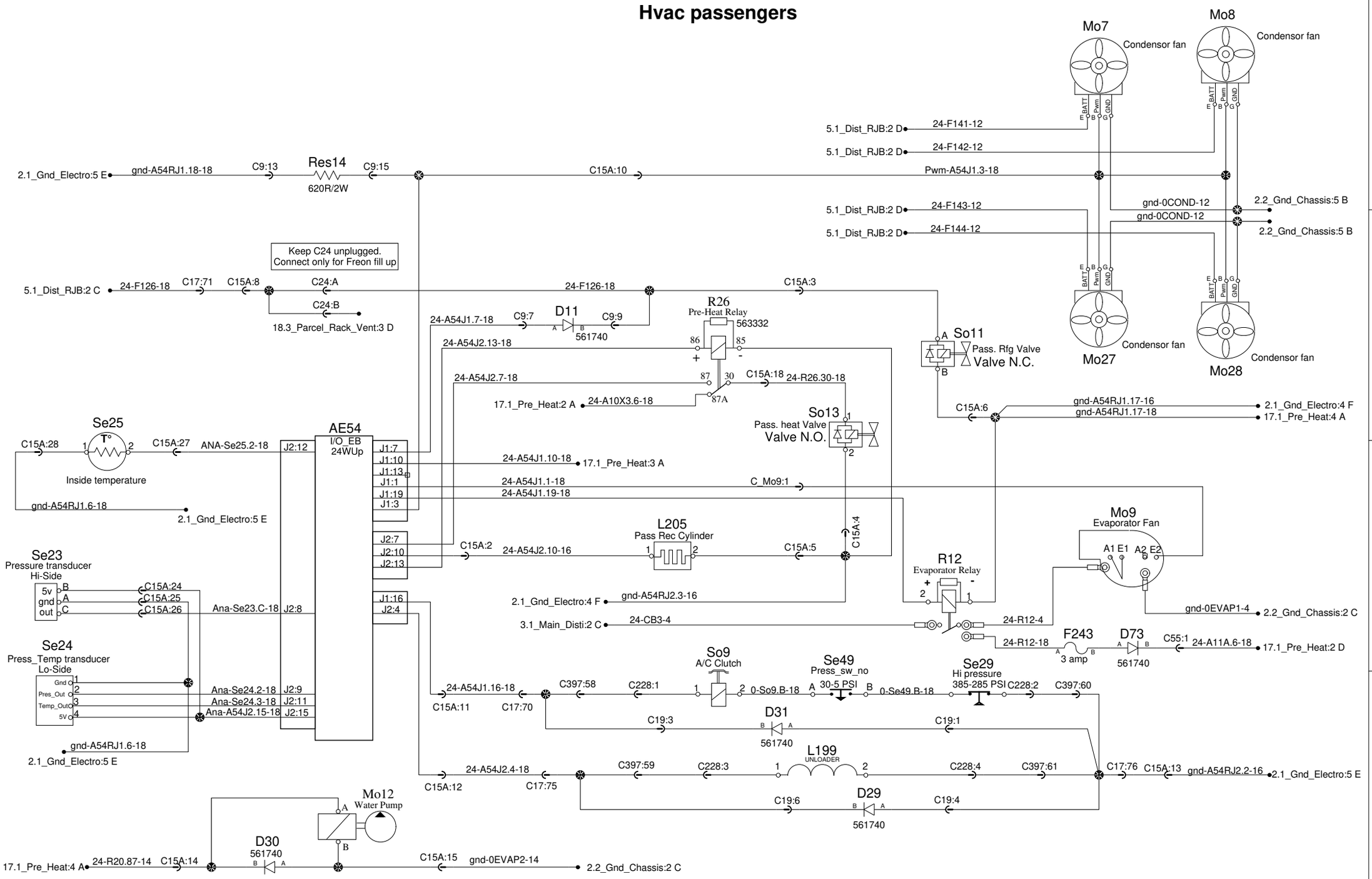

PREVOST®	WIRING DIAGRAM	No:D062140	Page:18.2	Rev:6

Hvac passengers
Customer Adaptation Offshore Heating Sys.
3 Speed Motor

REFER TO P18.2(STD) FOR ALL DETAILS

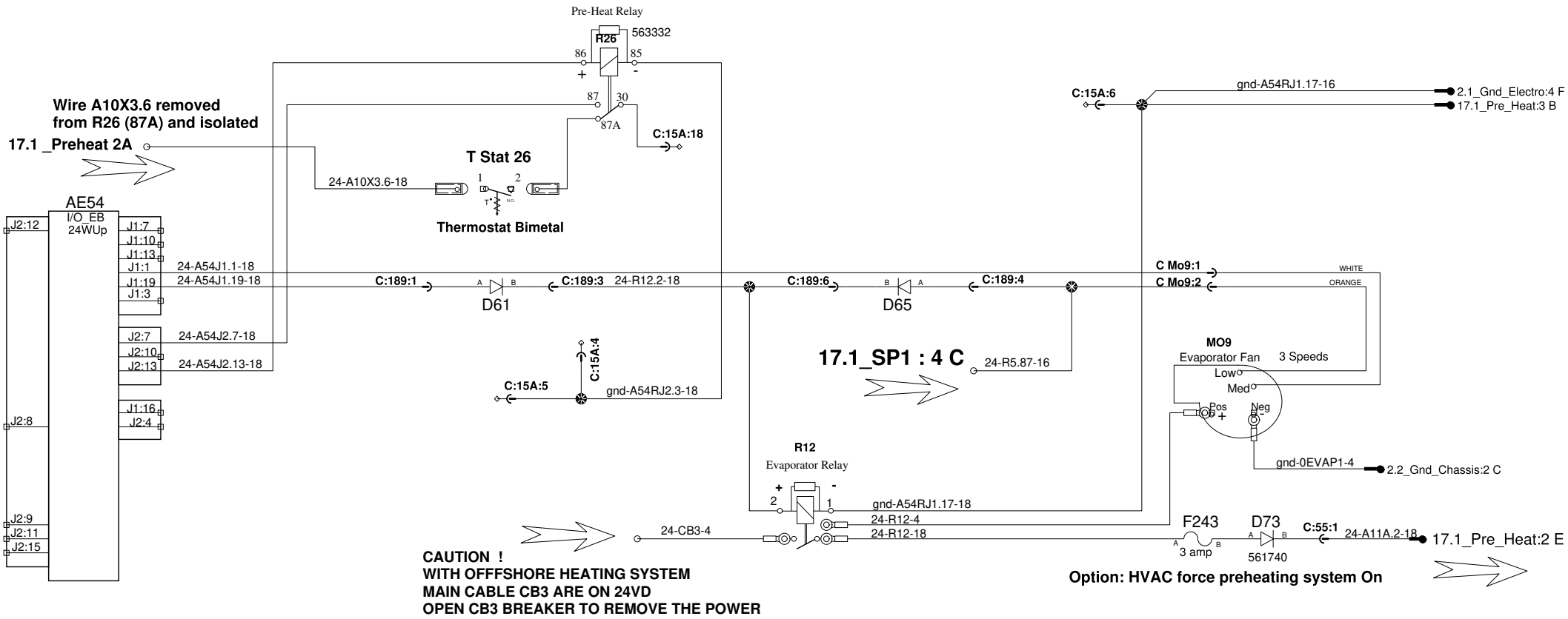

PREVOST®	WIRING DIAGRAM	No:D062140	Page:18.2 SP1	Rev:0

Hvac passengers
Customer Adaptation Offshore Heating Sys.
2 Speed Motor

REFER TO P18.2(STD) FOR ALL DETAILS

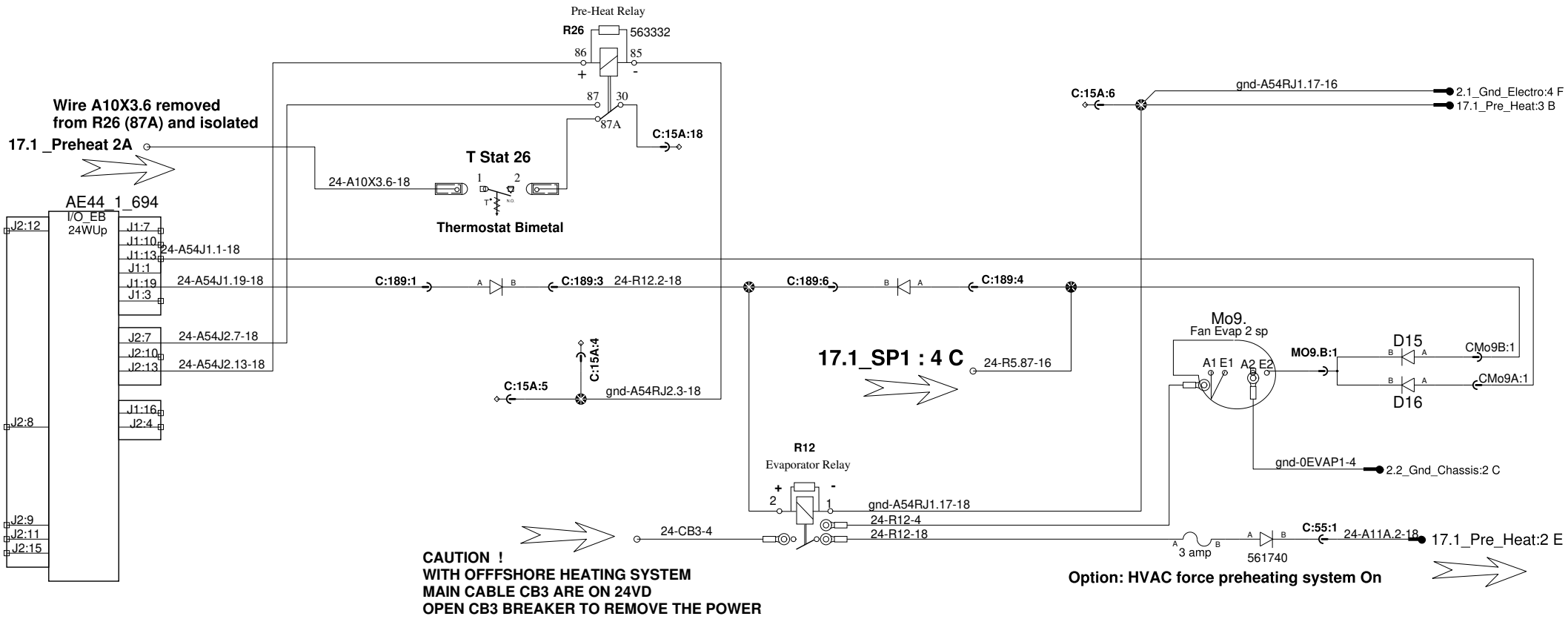

PREVOST®	WIRING DIAGRAM	No:D062140	Page:18.2 SP2	Rev:0

Hvac passengers
Customer Adaptation Offshore Heating Sys.
3 Speed Motor

REFER TO P18.2(STD) FOR ALL DETAILS

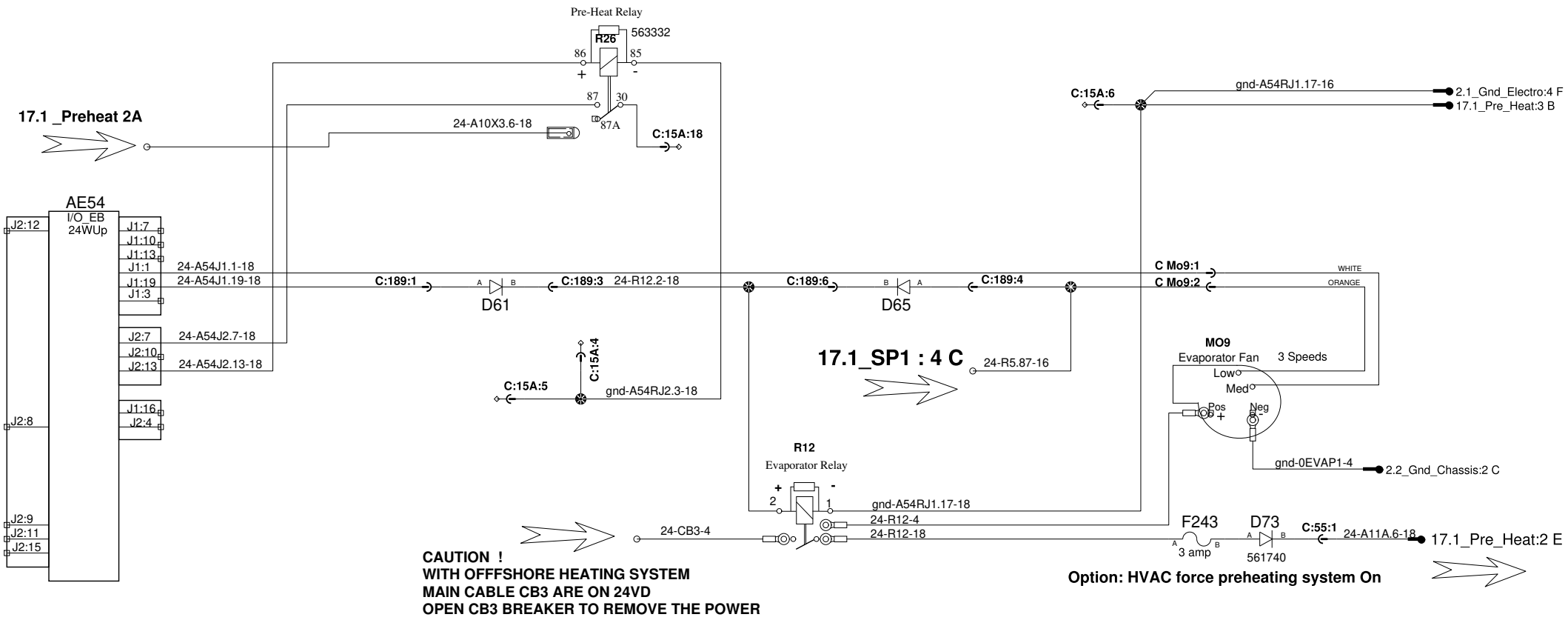

PREVOST®	WIRING DIAGRAM	No:D062140	Page:18.2 SP1	Rev:02

Hvac passengers
Customer Adaptation Offshore Heating Sys.
2 Speed Motor

REFER TO P18.2(STD) FOR ALL DETAILS

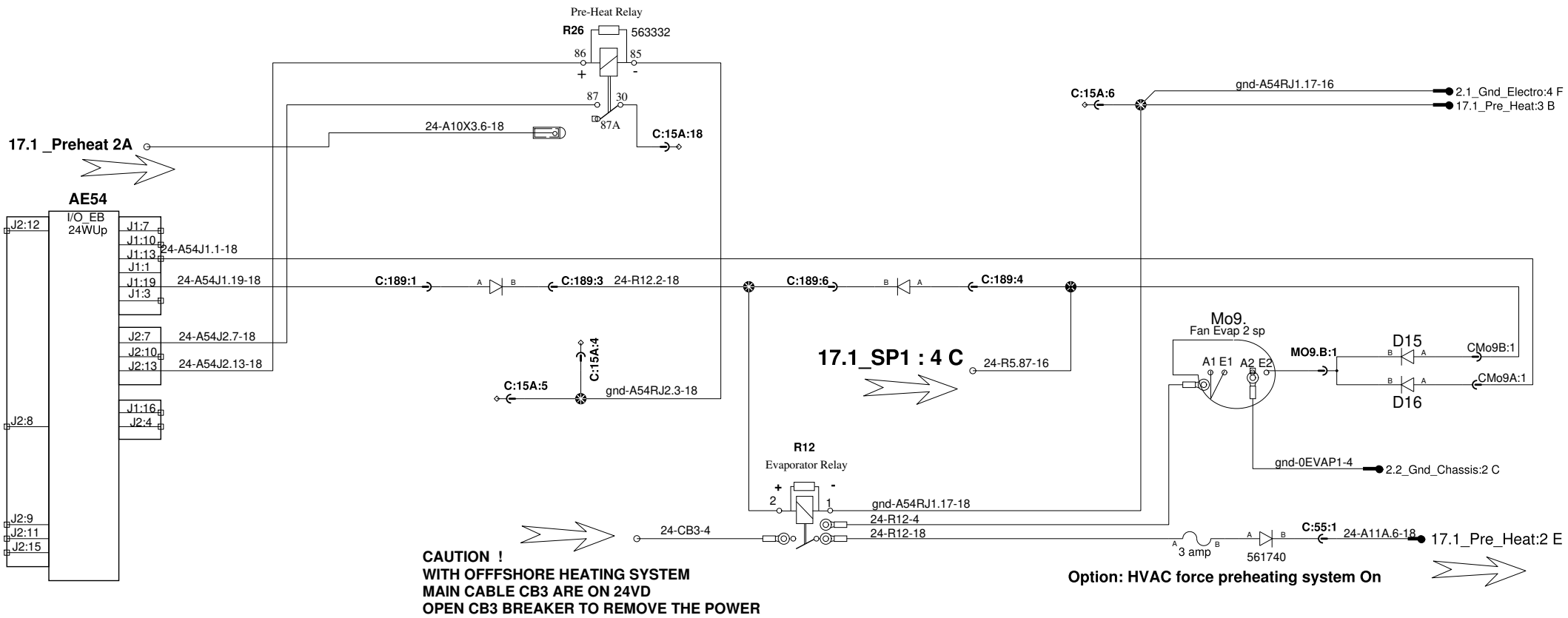

PREVOST®	WIRING DIAGRAM	No:D062140	Page:18.2 SP2	Rev:03

Parcel rack A/C system

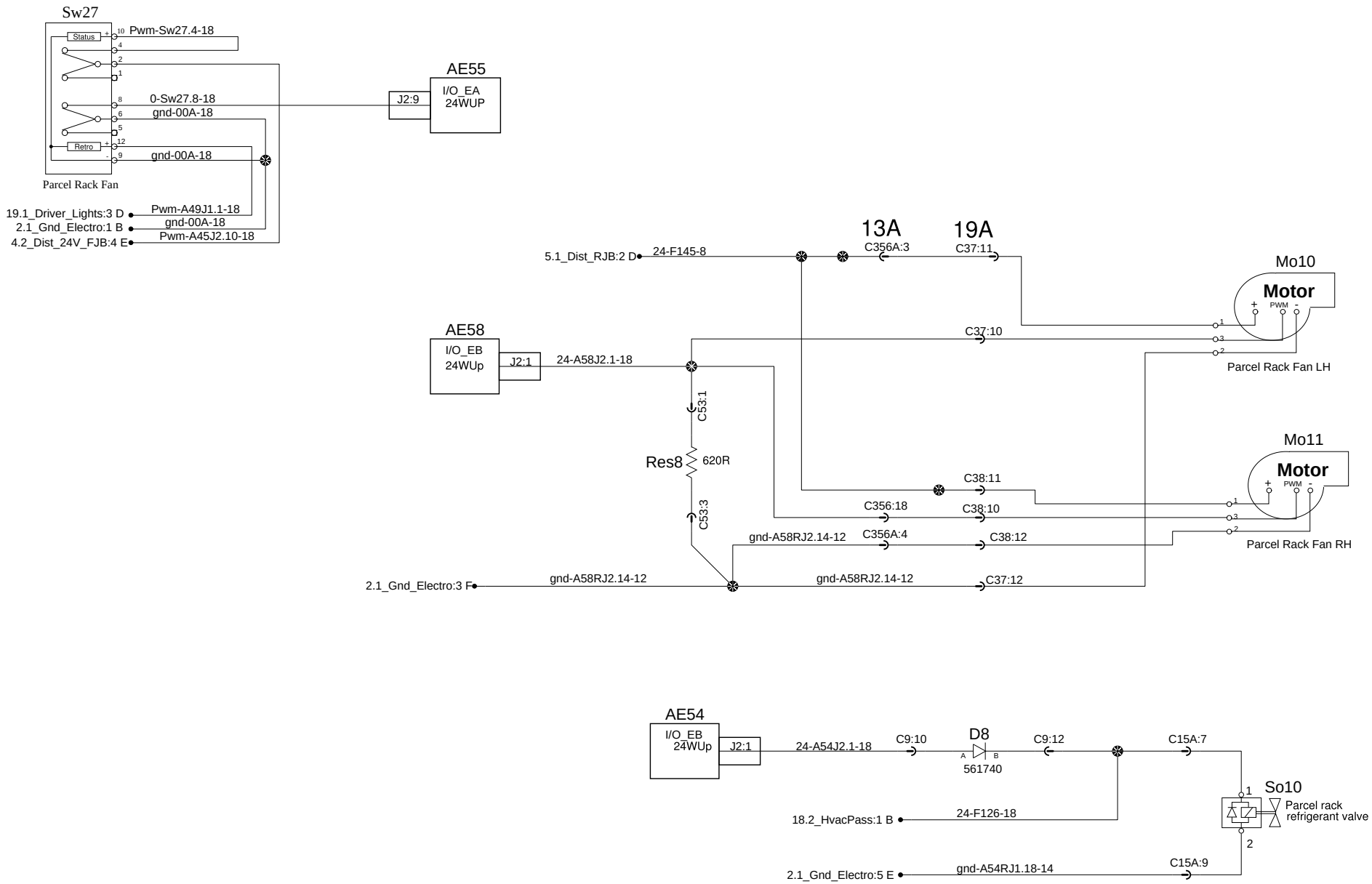

PREVOST®	WIRING DIAGRAM	No:D062140	Page:18.3	Rev:0

Parcel rack A/C system

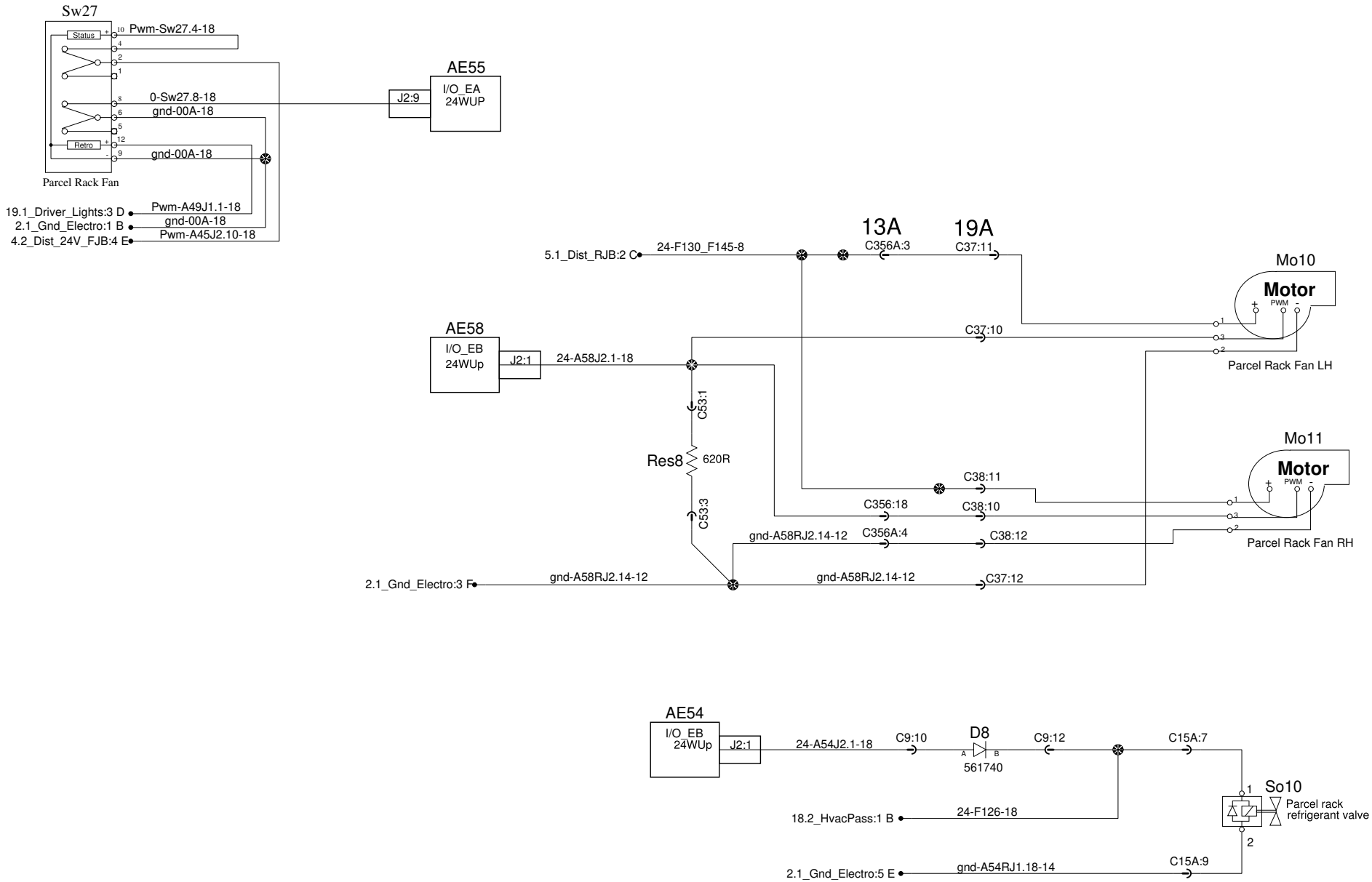

PREVOST®	WIRING DIAGRAM	No:D062140	Page:18.3	Rev:8

Roof Hatches with fan

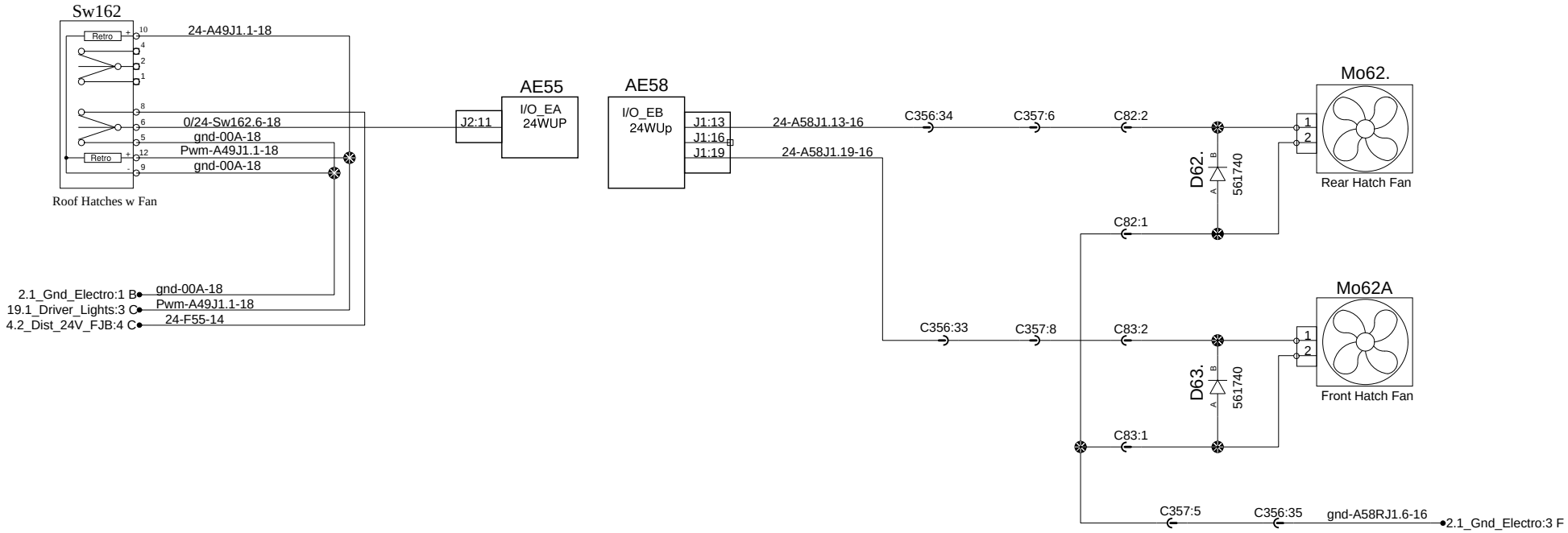

PREVOST®	WIRING DIAGRAM	No:D062140	Page:18.5	Rev:0

Driver lights

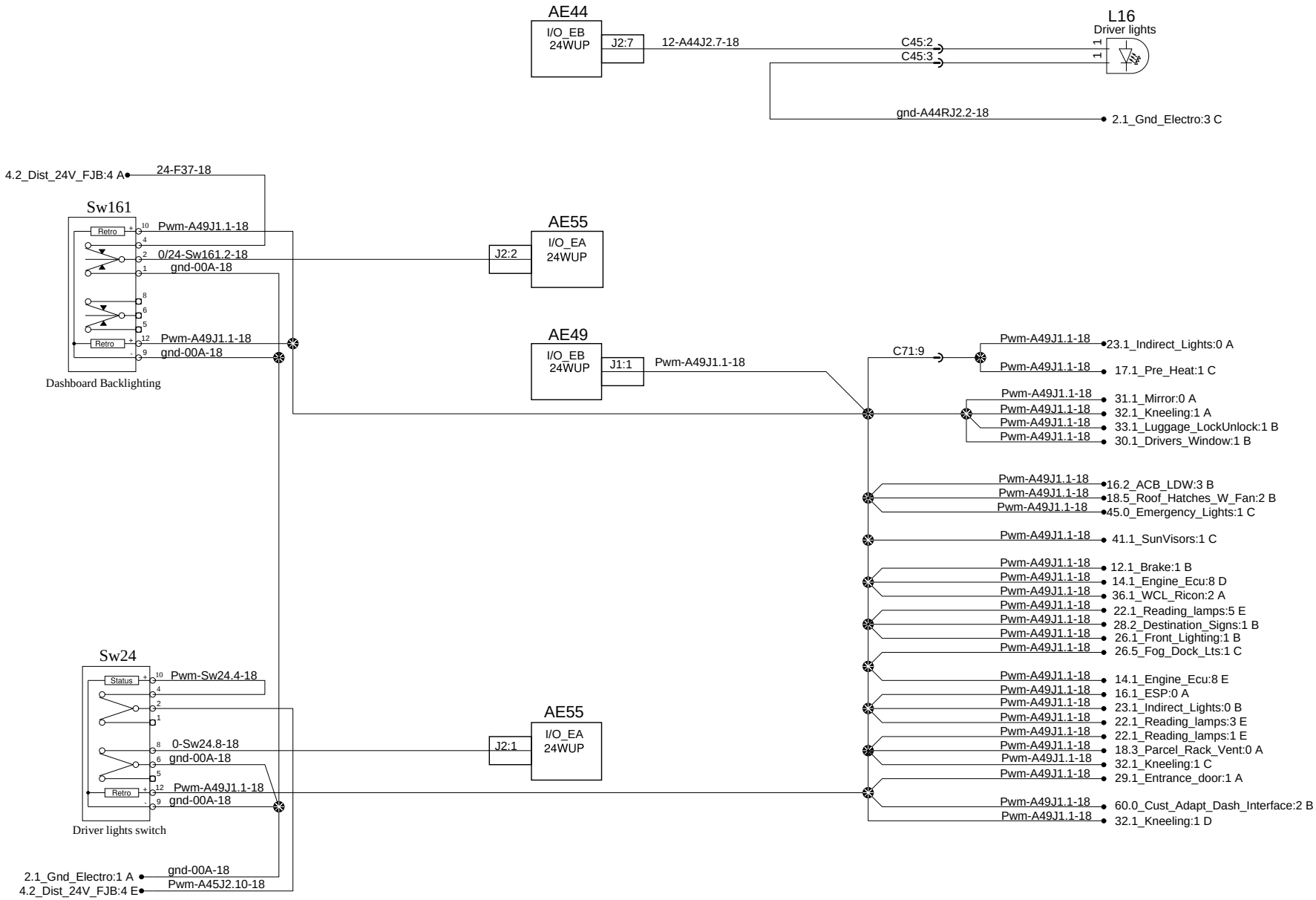

PREVOST®	WIRING DIAGRAM	No:D062140	Page:19.1	Rev:0

Driver lights

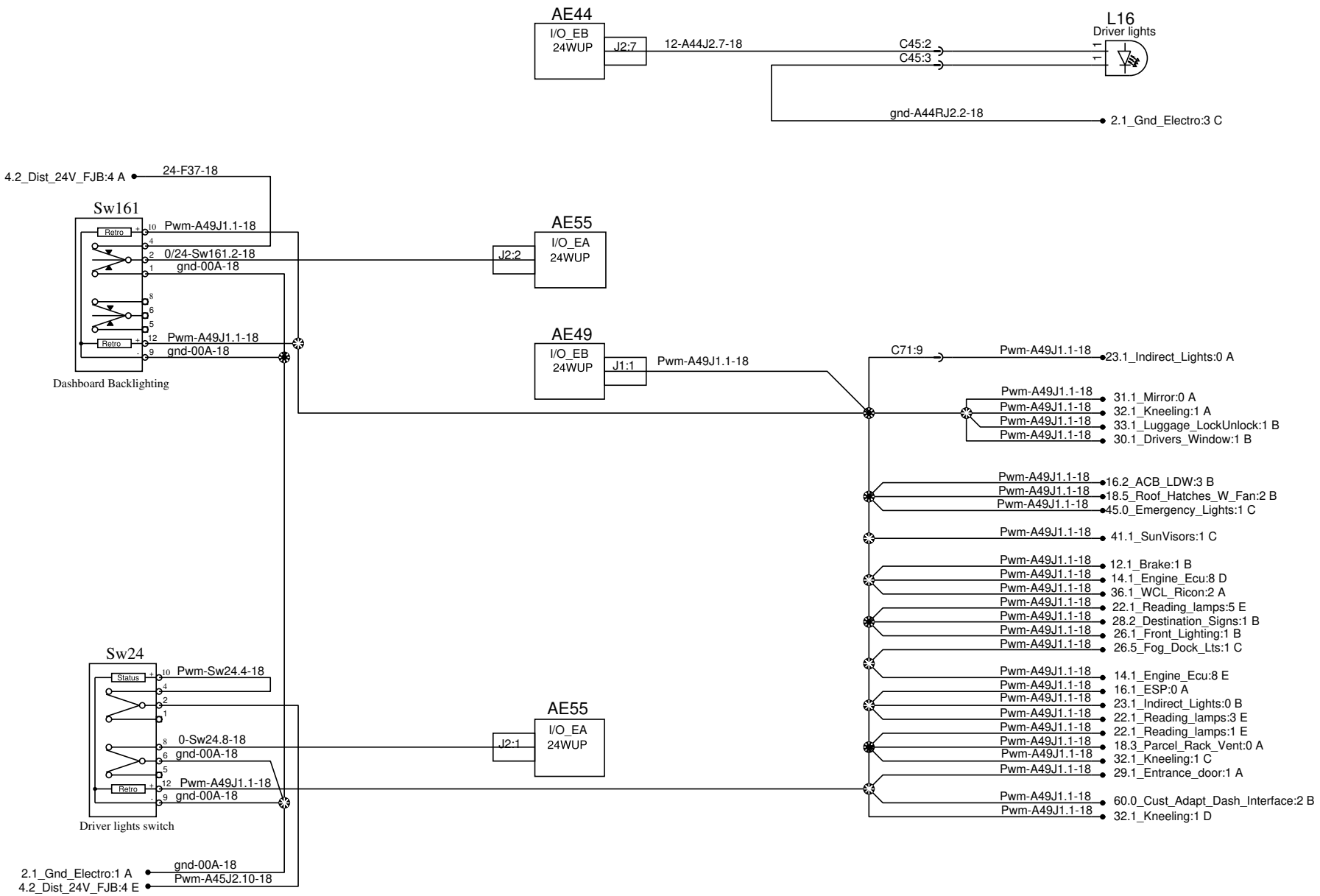

PREVOST®	WIRING DIAGRAM	No:D062140	Page:19.1	Rev:4

Aisle lights

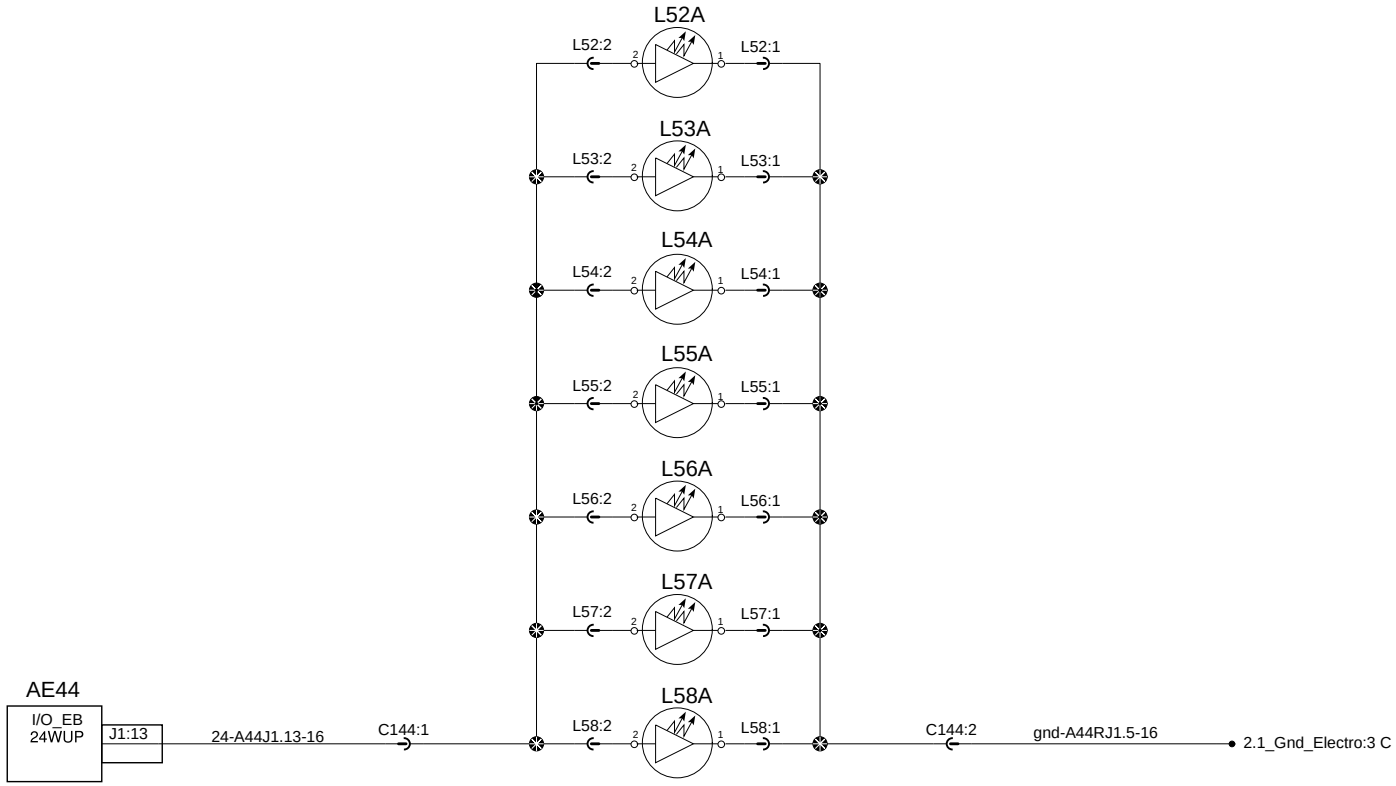

PREVOST®	WIRING DIAGRAM	No:D062140	Page:20.1	Rev:0

Aisle lights Faic seats

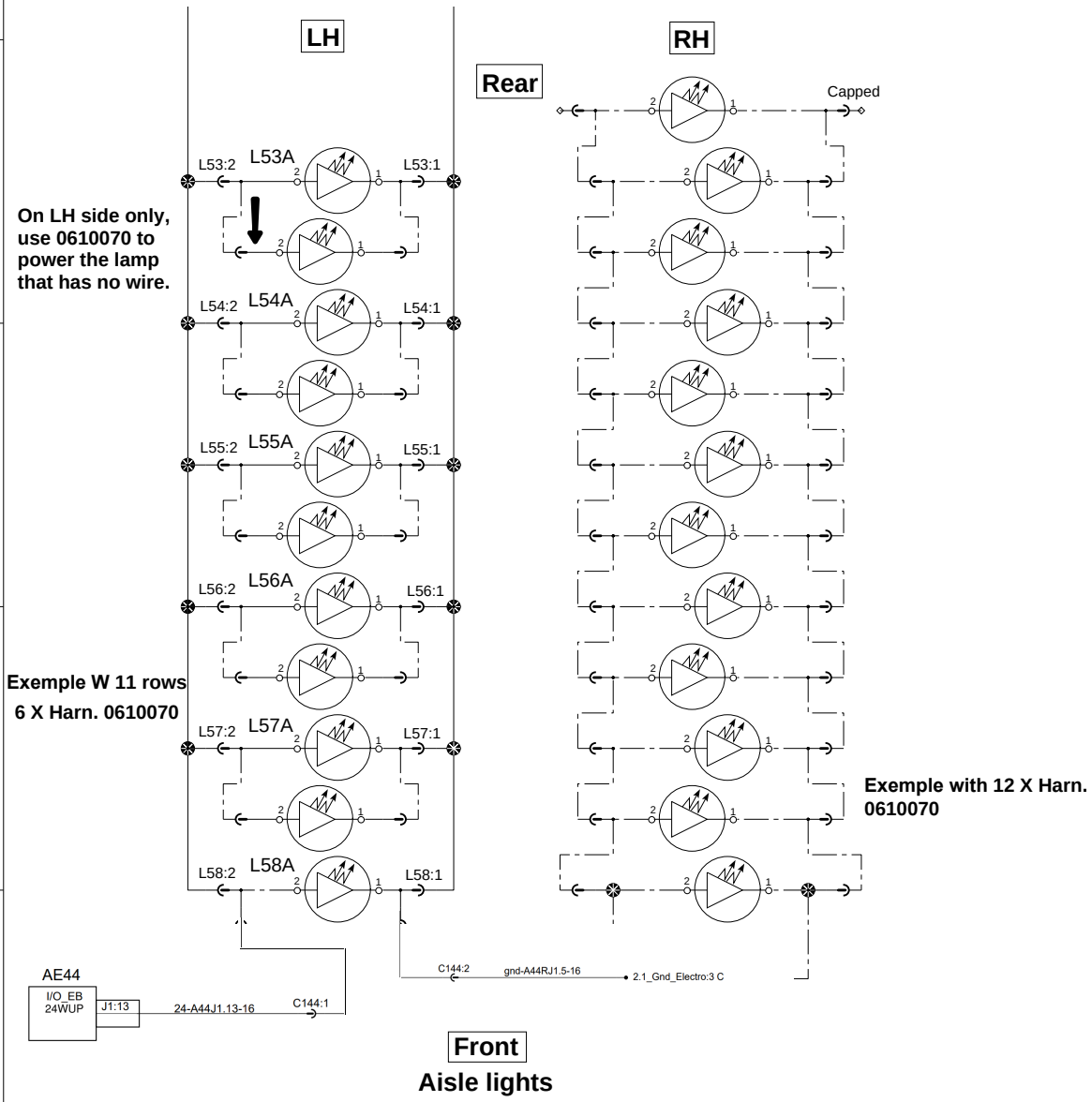

PREVOST®	WIRING DIAGRAM	No:D062140	Page:20.1 SP1	Rev:0

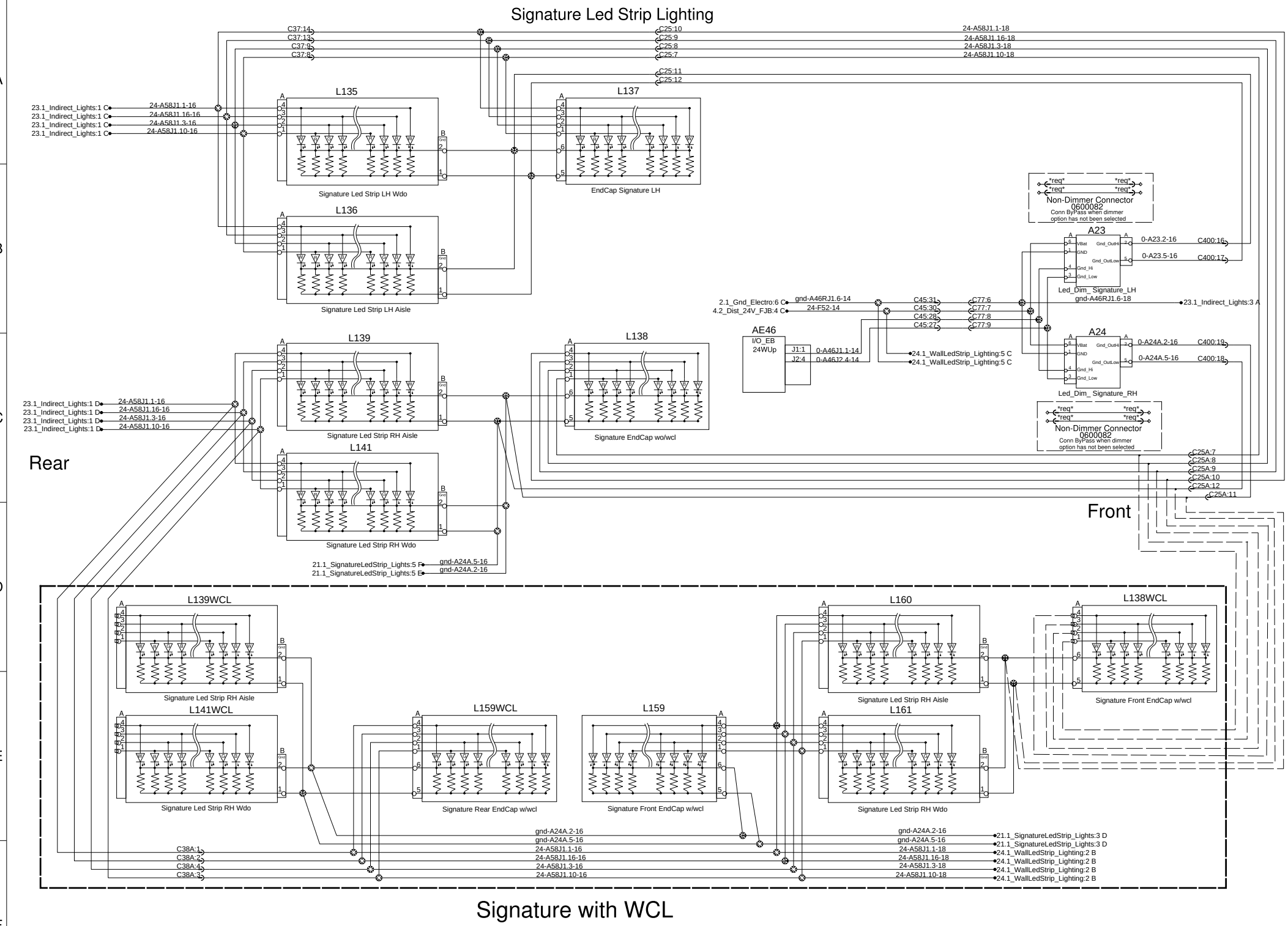
Signature Led Strip Lighting
C37:14
C37:13
C37:9
C37:8
C25:10
C25:9
C25:8
C25:7
C25:11
C25:12
24-A58J1.1-18
24-A58J1.16-18
24-A58J1.3-18
24-A58J1.10-18
23.1_Indirect_Lights:1 C
24-A58J1.1-16
24-A58J1.16-16
24-A58J1.3-16
24-A58J1.10-16
L135
Signature Led Strip LH Wdo
L136
Signature Led Strip LH Aisle
L137
EndCap Signature LH
req
Non-Dimmer Connector
0600082
Conn ByPass when dimmer
option has not been selected
A23
0-A23.2-16
0-A23.5-16
C400:16
C400:17
Led_Dim_ Signature_LH
gnd-A46RJ1.6-18
23.1_Indirect_Lights:3 A
2.1_Gnd_Electro:6 C
4.2_Dist_24V_FJB:4 C
gnd-A46RJ1.6-14
24-F52-14
C45:31
C45:30
C45:28
C45:27
C77:6
C77:7
C77:8
C77:9
AE46
I/O_EB
24WUp
J1:1
J2:4
0-A46J1.1-14
0-A46J2.4-14
24.1_WallLedStrip_Lighting:5 C
24.1_WallLedStrip_Lighting:5 C
A24
0-A24A.2-16
0-A24A.5-16
C400:19
C400:18
Led_Dim_ Signature_RH
23.1_Indirect_Lights:1 D
24-A58J1.1-16
24-A58J1.16-16
24-A58J1.3-16
24-A58J1.10-16
L139
Signature Led Strip RH Aisle
L138
Signature EndCap wo/wcl
Rear
L141
Signature Led Strip RH Wdo
C25A:7
C25A:8
C25A:9
C25A:10
C25A:12
C25A:11
Front
21.1_SignatureLedStrip_Lights:5 F
21.1_SignatureLedStrip_Lights:5 E
gnd-A24A.5-16
gnd-A24A.2-16
L139WCL
Signature Led Strip RH Aisle
L141WCL
Signature Led Strip RH Wdo
L159WCL
Signature Rear EndCap w/wcl
L159
Signature Front EndCap w/wcl
L160
Signature Led Strip RH Aisle
L161
Signature Led Strip RH Wdo
L138WCL
Signature Front EndCap w/wcl
C38A:1
C38A:2
C38A:4
C38A:3
gnd-A24A.2-16
gnd-A24A.5-16
24-A58J1.1-16
24-A58J1.16-16
24-A58J1.3-16
24-A58J1.10-16
24-A58J1.1-18
24-A58J1.16-18
24-A58J1.3-18
24-A58J1.10-18
21.1_SignatureLedStrip_Lights:3 D
24.1_WallLedStrip_Lighting:2 B
Signature with WCL
Rev:0
Page:21.1
No:D062140
WIRING DIAGRAM
PREVOST

Reading lamp and hostess chime with WCL Ricon RH

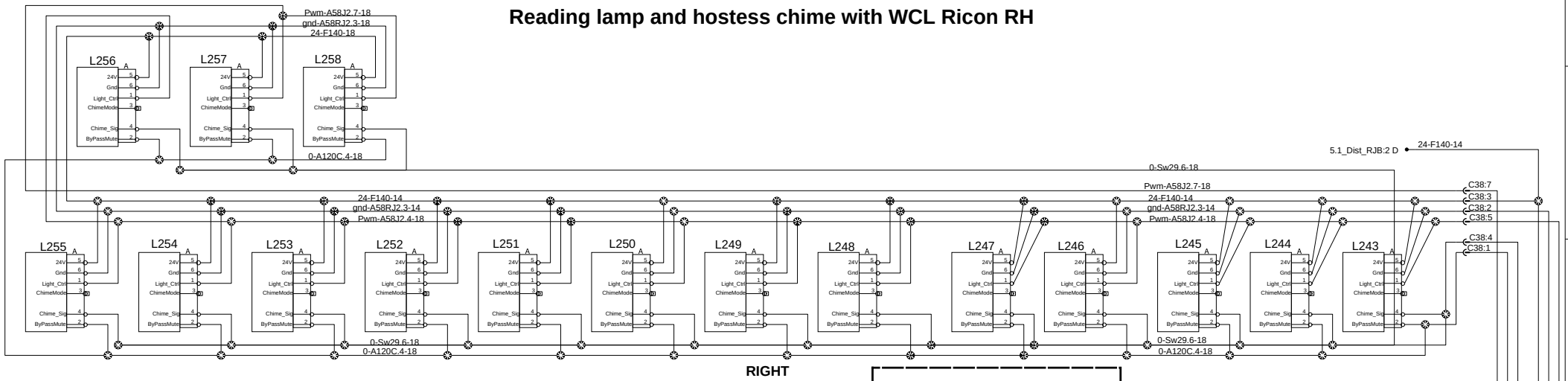

Front

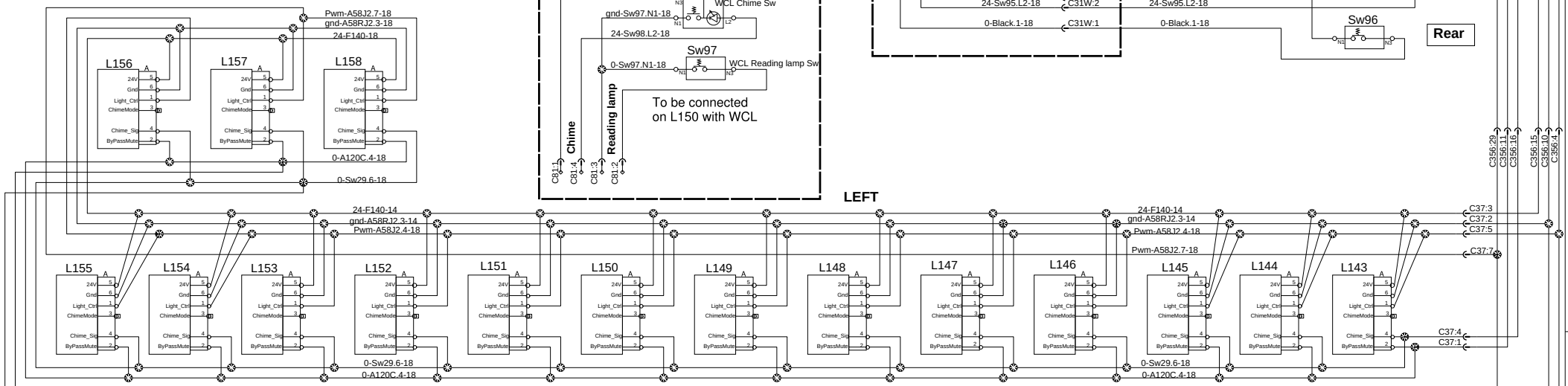

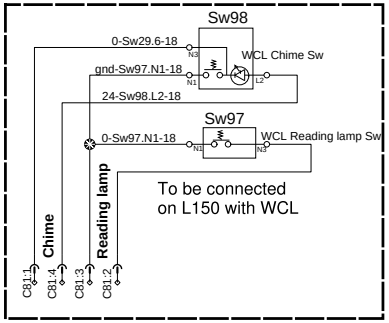

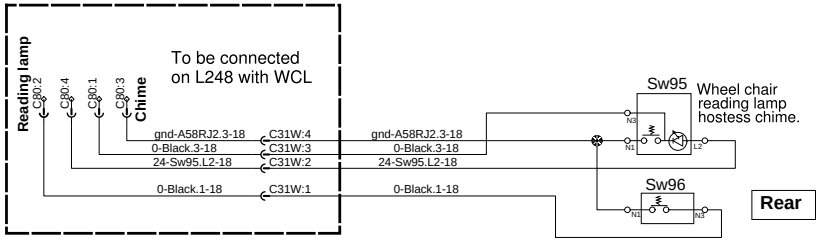

C356:29
C356:11
C356:16
C356:15
C356:10
C356:4

Reading lamp and hostess chime LH

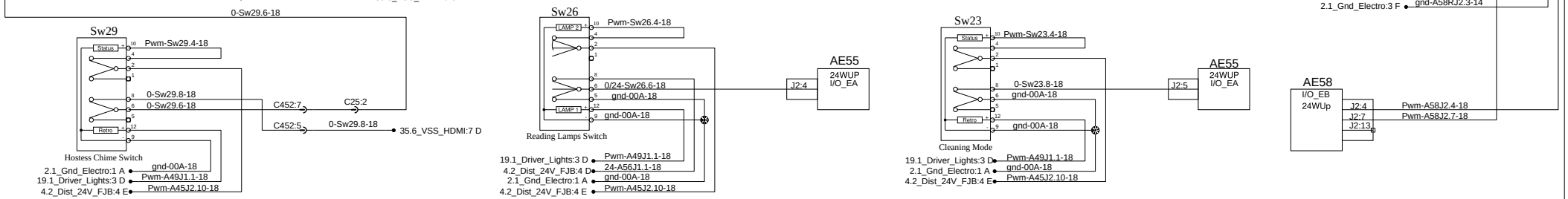

Rev:0

Page:22.1

No:D062140

WIRING DIAGRAM

PREVOST®

Indirect lighting

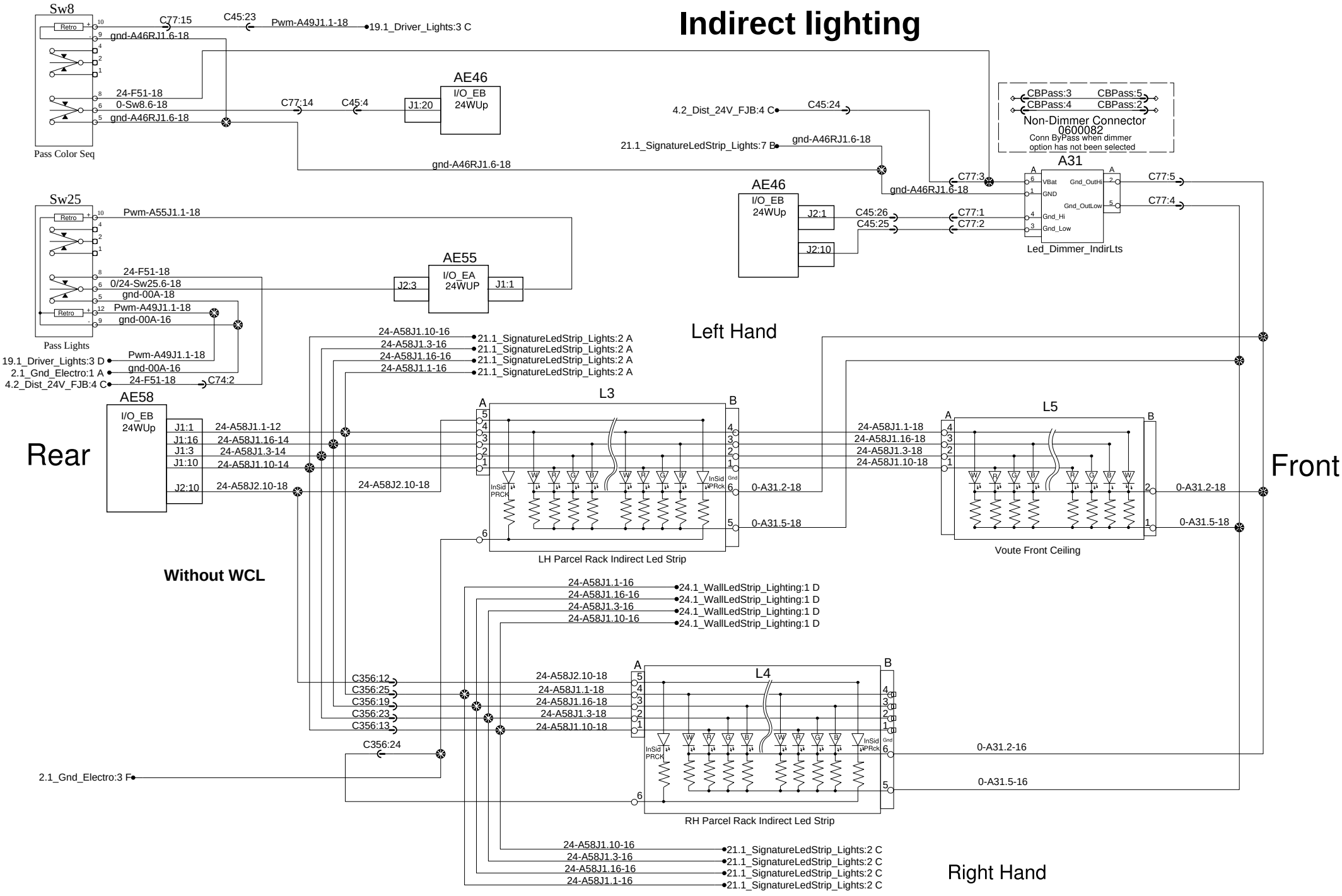

PREVOST®	WIRING DIAGRAM	No:D062140	Page:23.1	Rev:0

Indirect lighting

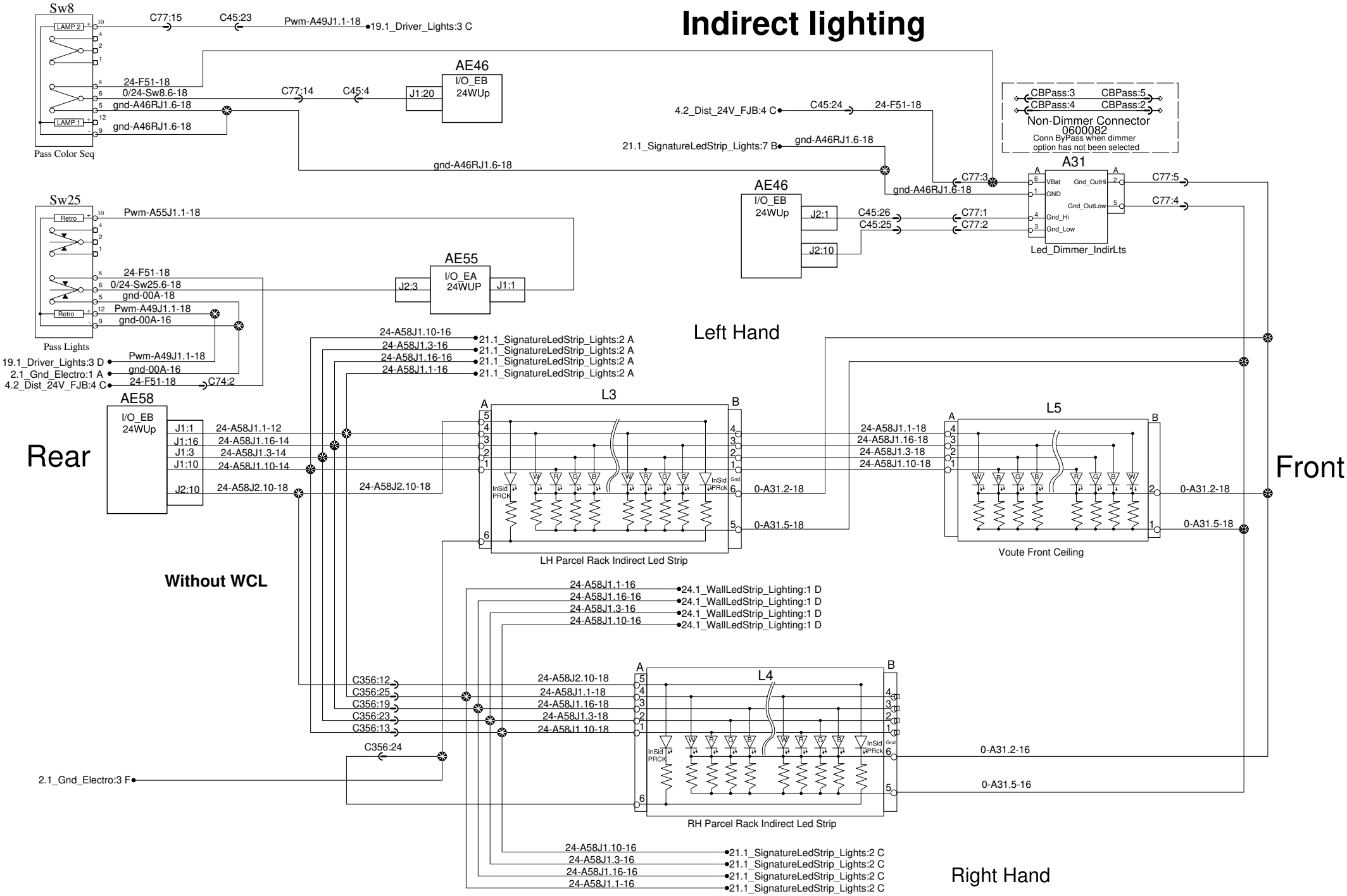

PREVOST®	WIRING DIAGRAM	No:D062140	Page:23.1	Rev:6

Wall Led Srips

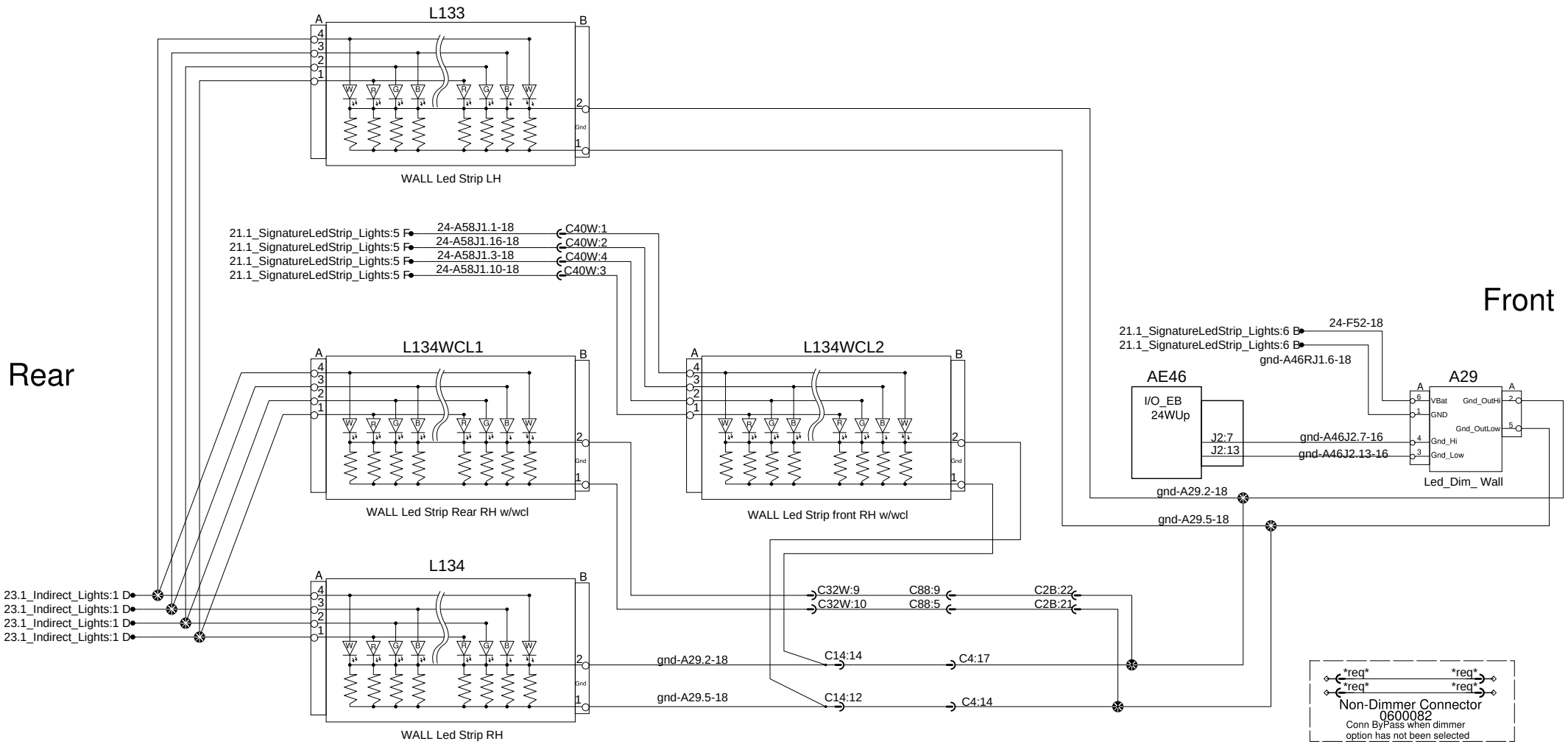

PREVOST®	WIRING DIAGRAM	No:D062140	Page:24.1	Rev:0

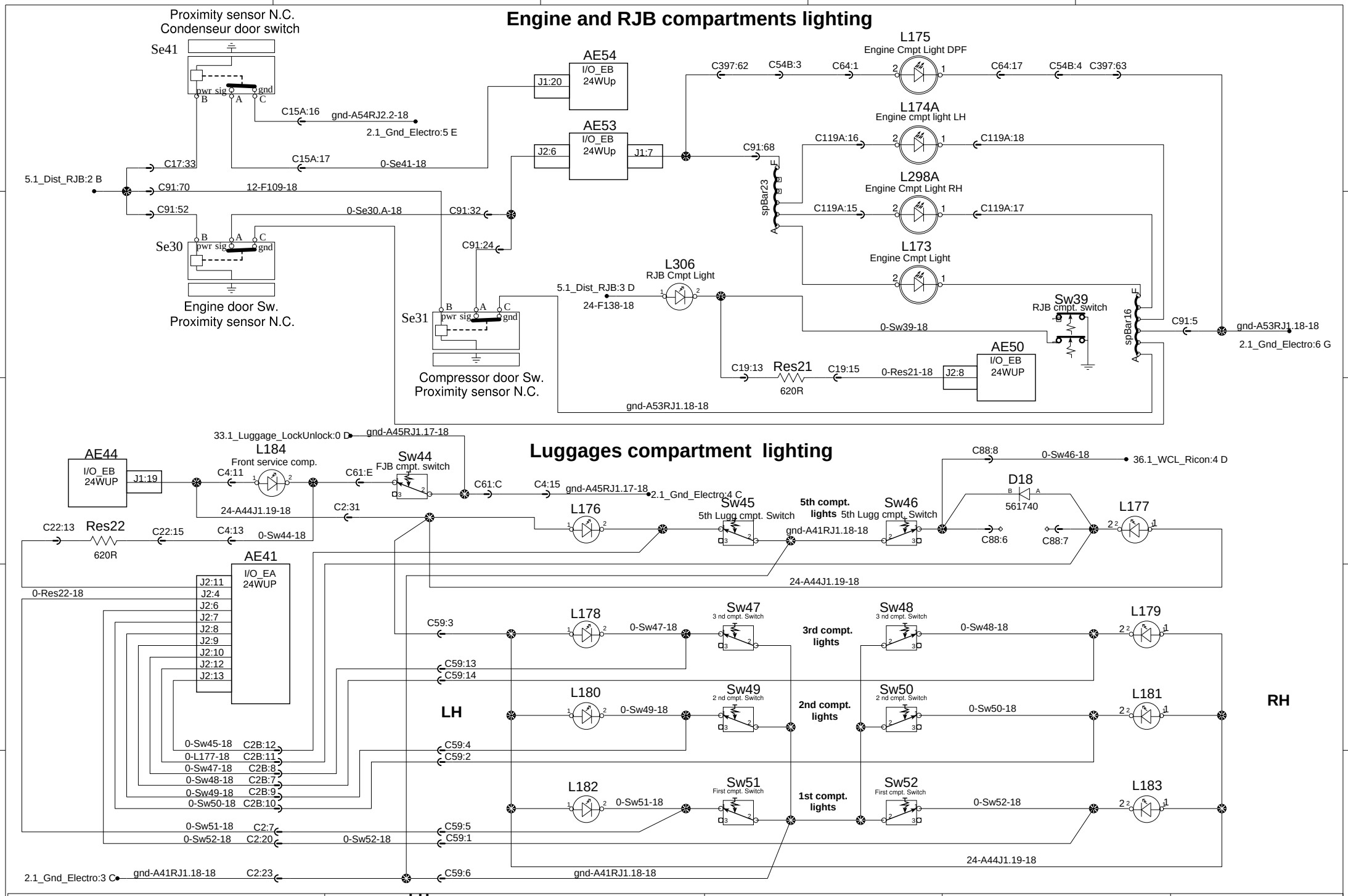

PREVOST®	LH WIRING DIAGRAM	No:D062140	Page:25.1	Rev:0

Cornering, Front flashers, Markers, Clearance and Head lights

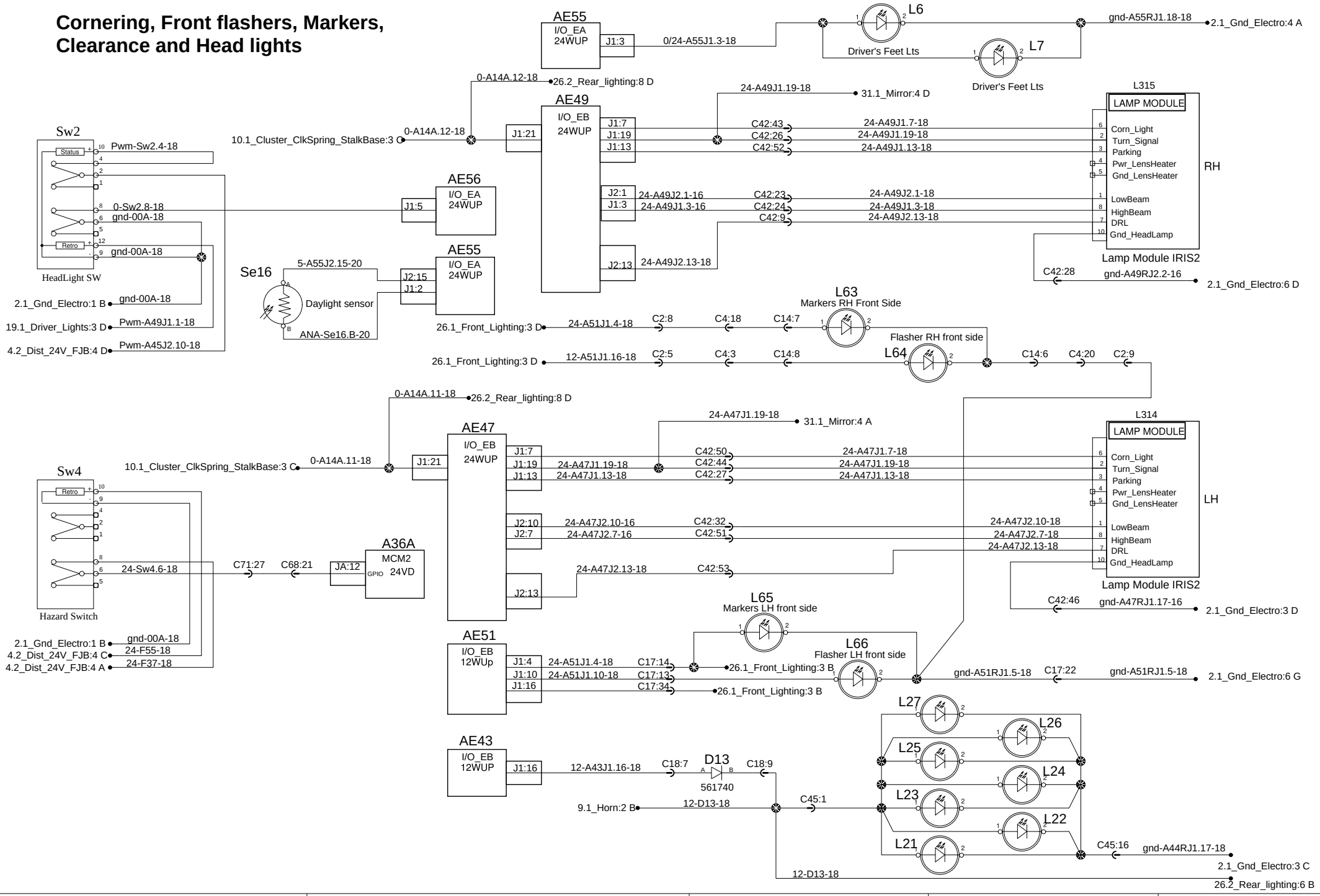

PREVOST®	WIRING DIAGRAM	No:D062140	Page:26.1	Rev:0

Cornering, Front flashers, Markers, Clearance and Head lights

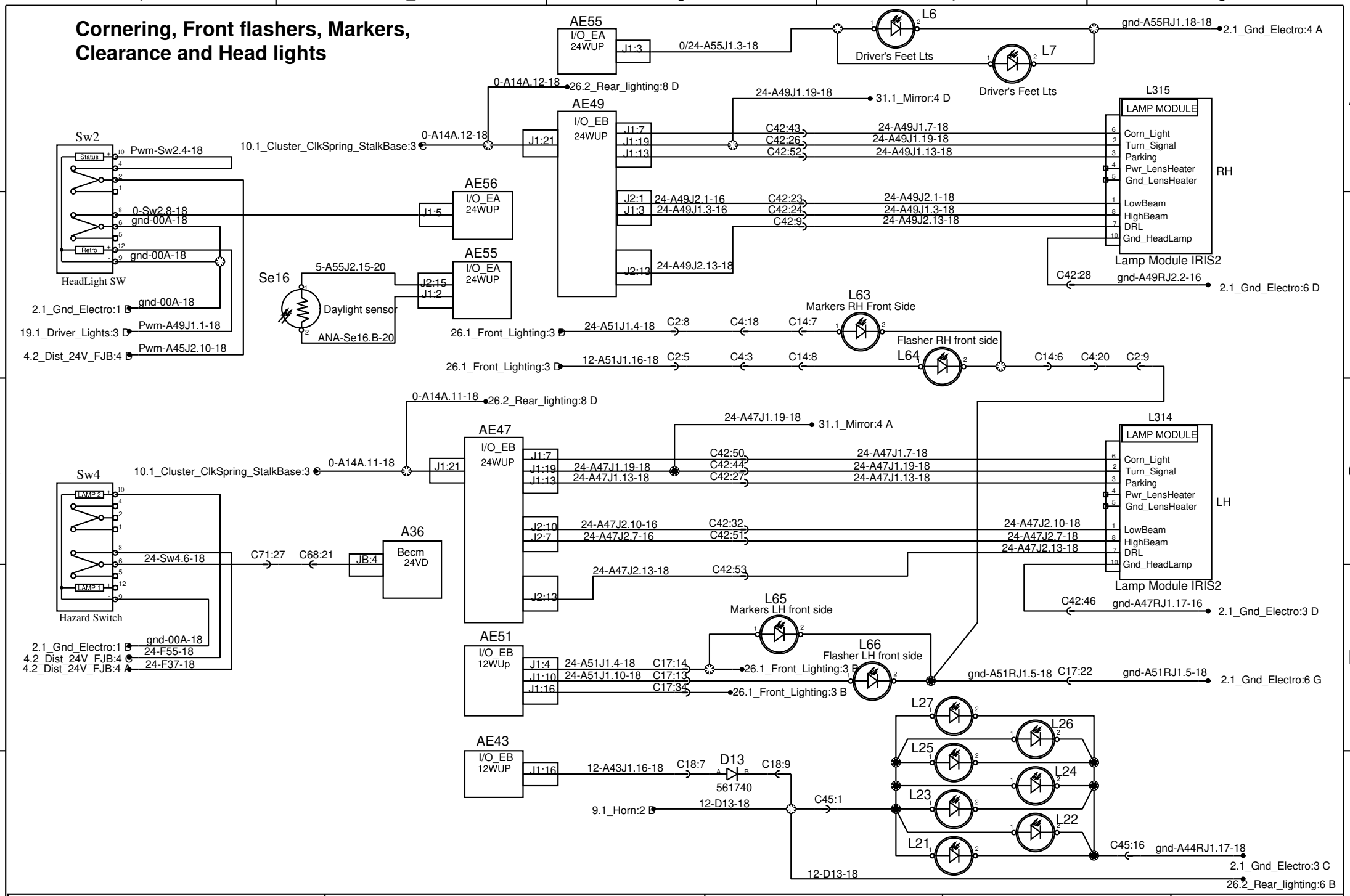

PREVOST®	WIRING DIAGRAM	No:D062140	Page:26.1	Rev:3

Cornering, Front flashers, Markers, Clearance and Head lights

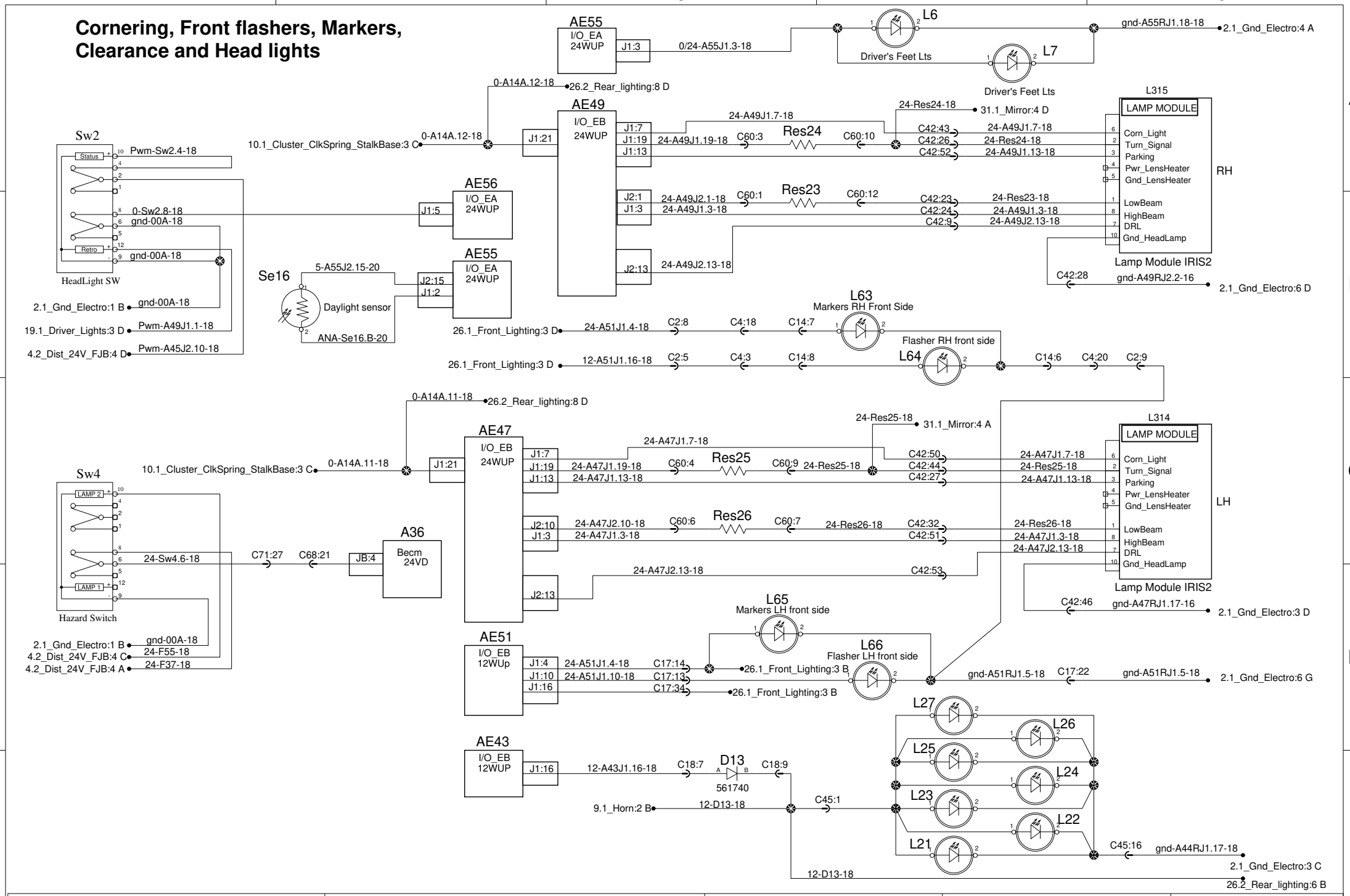

PREVOST®	WIRING DIAGRAM	No:D062140	Page:26.1	Rev:4

Cornering, Front flashers, Markers, Clearance and Head lights

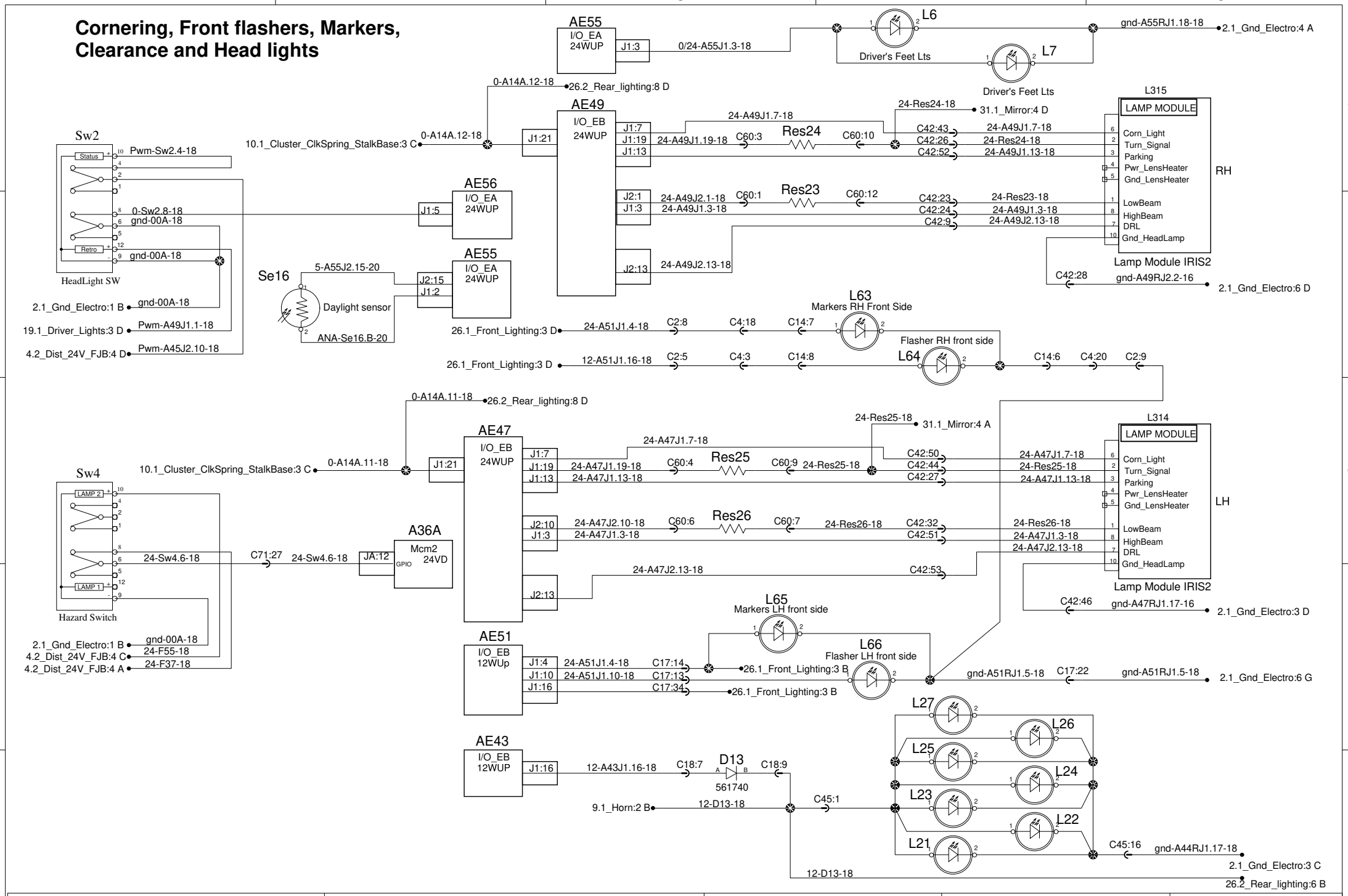

PREVOST®	WIRING DIAGRAM	No:D062140	Page:26.1	Rev:9

Rear flashers, Markers, Tail and stop lights

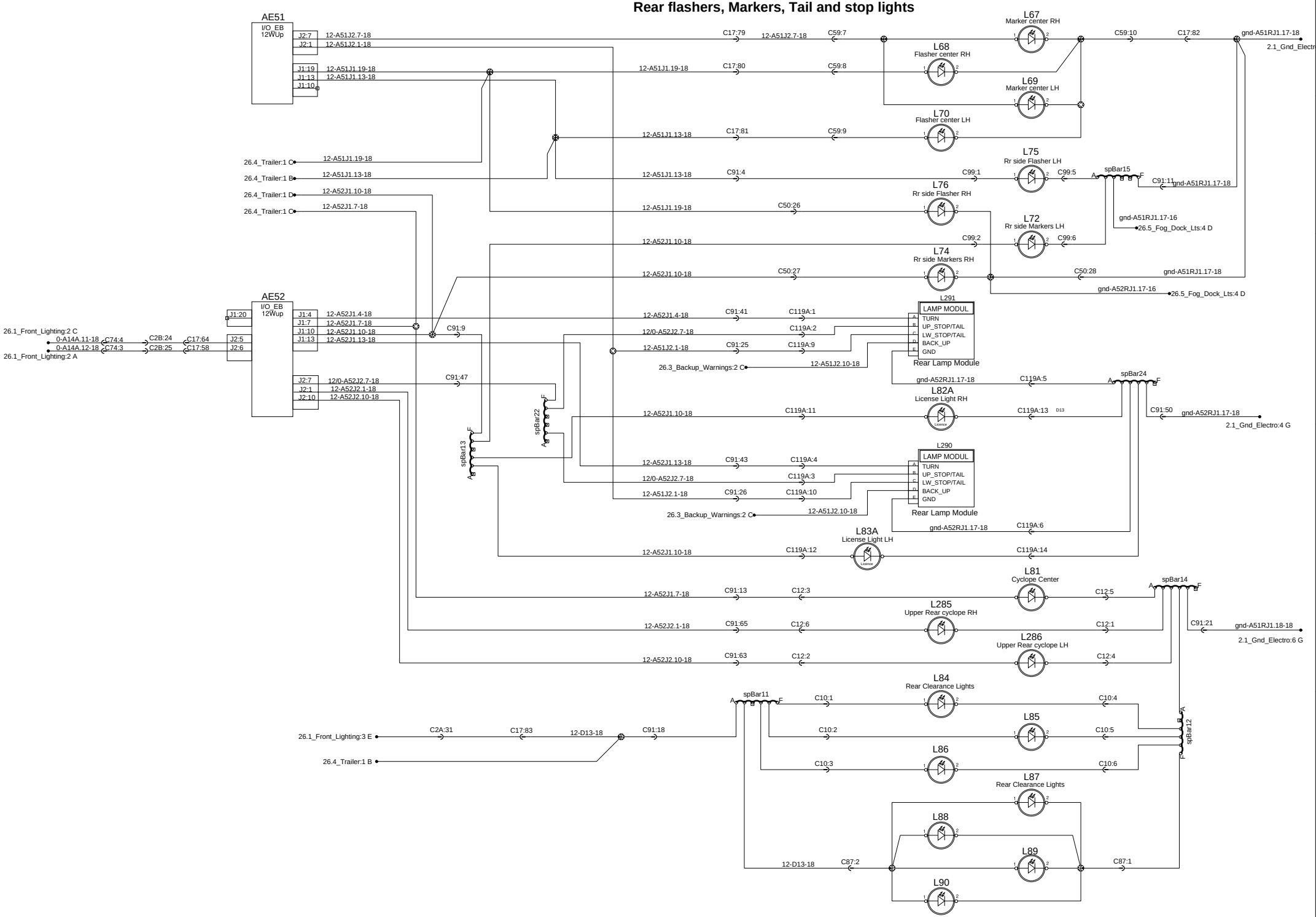

Rev:0

Page:26.2

No:D062140

WIRING DIAGRAM

PREVOST

Backup warnings

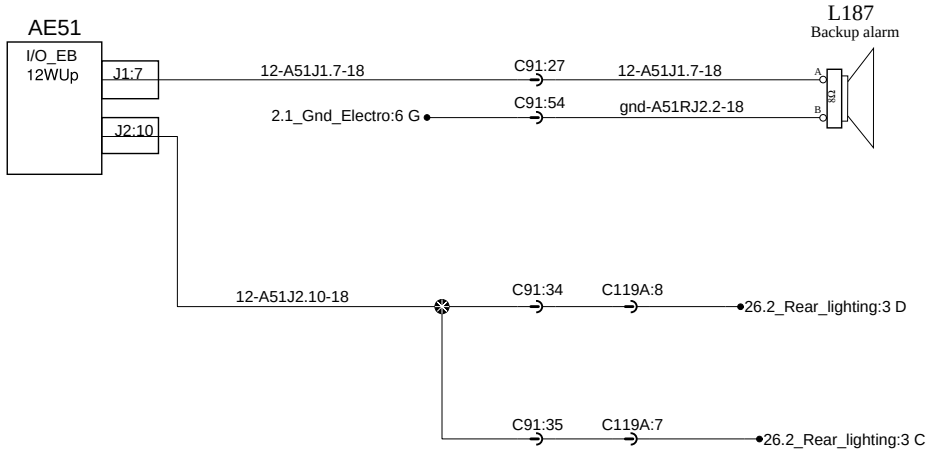

Trailer interface

SAE J560 Standard Trailer socket

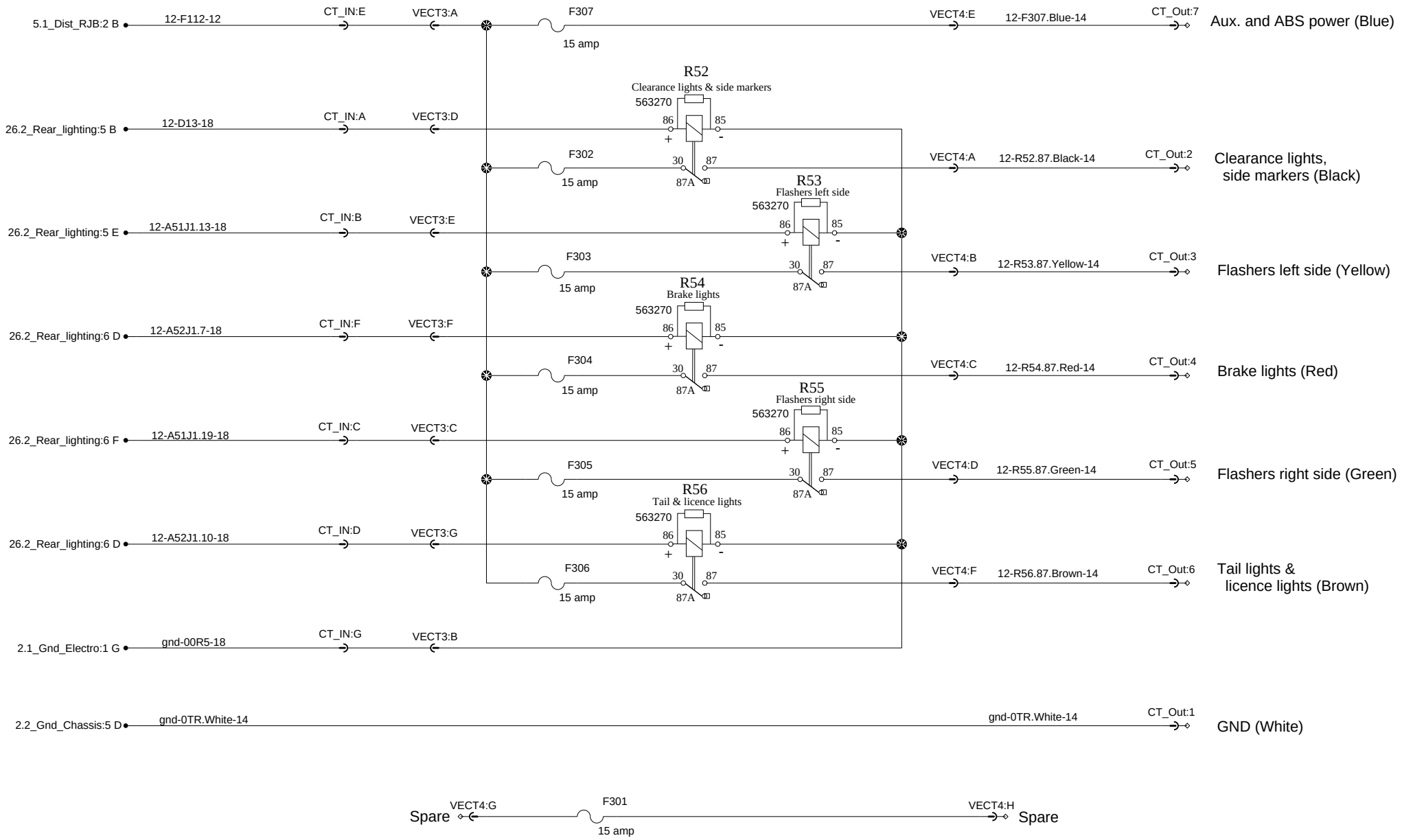

PREVOST®	WIRING DIAGRAM	No:D062140	Page:26.4	Rev:0

Trailer With Electrical Brake Interface

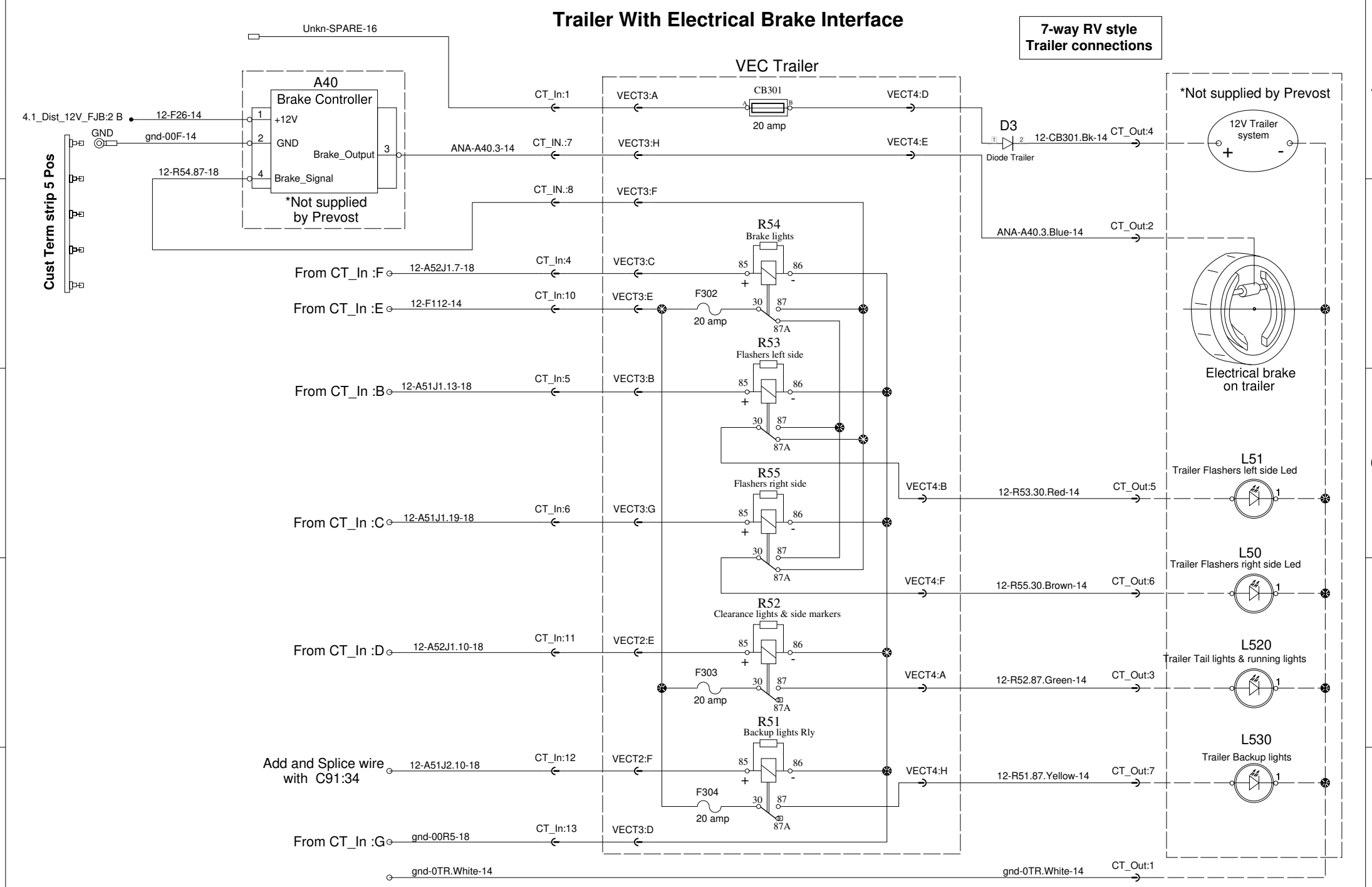

PREVOST®	WIRING DIAGRAM	No:D062140	Page:26.4SP1	Rev:1

Docking and Fog lights (Option)

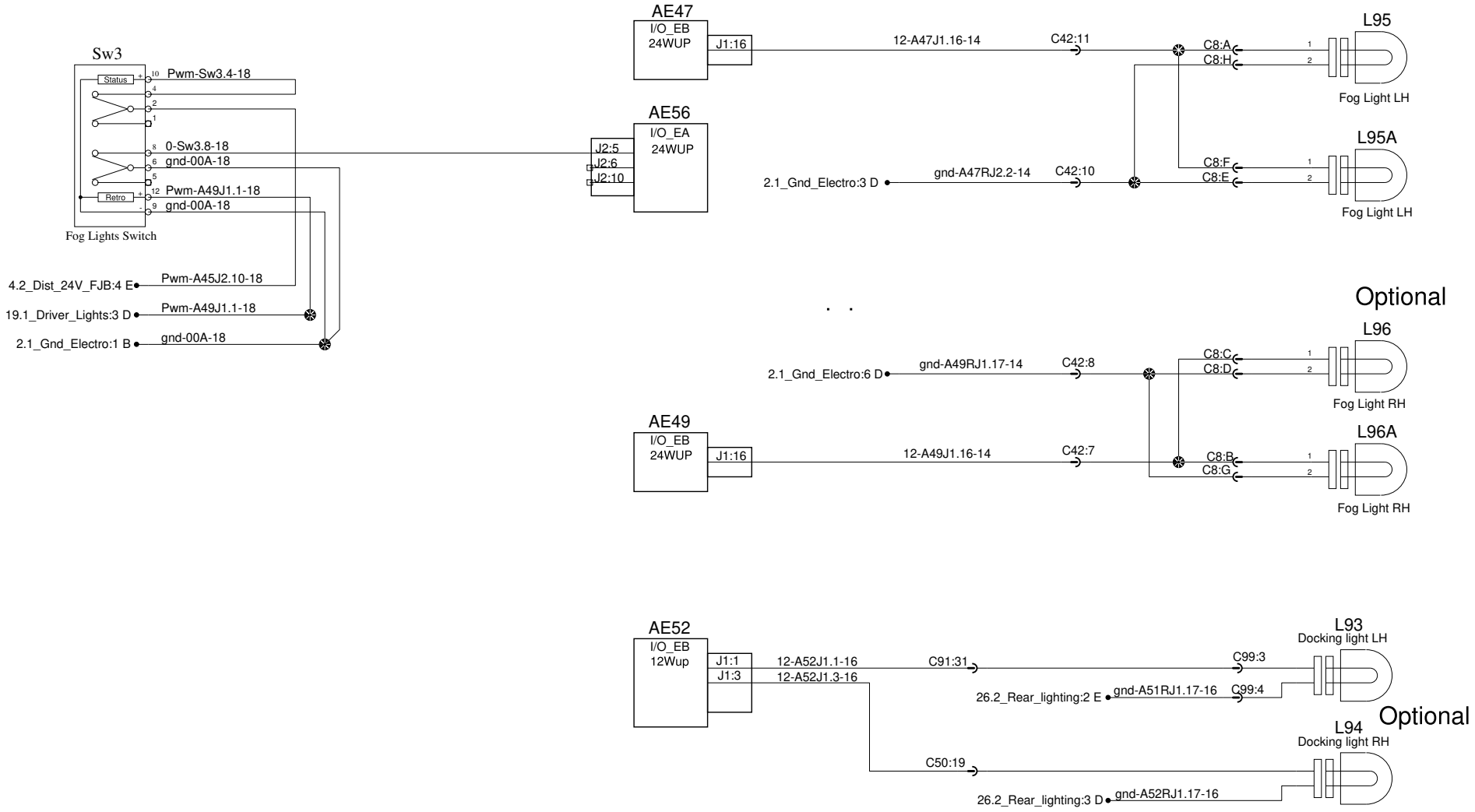

PREVOST®	WIRING DIAGRAM	No:D062140	Page:26.5	Rev:3

Curb lights on both side of the coach

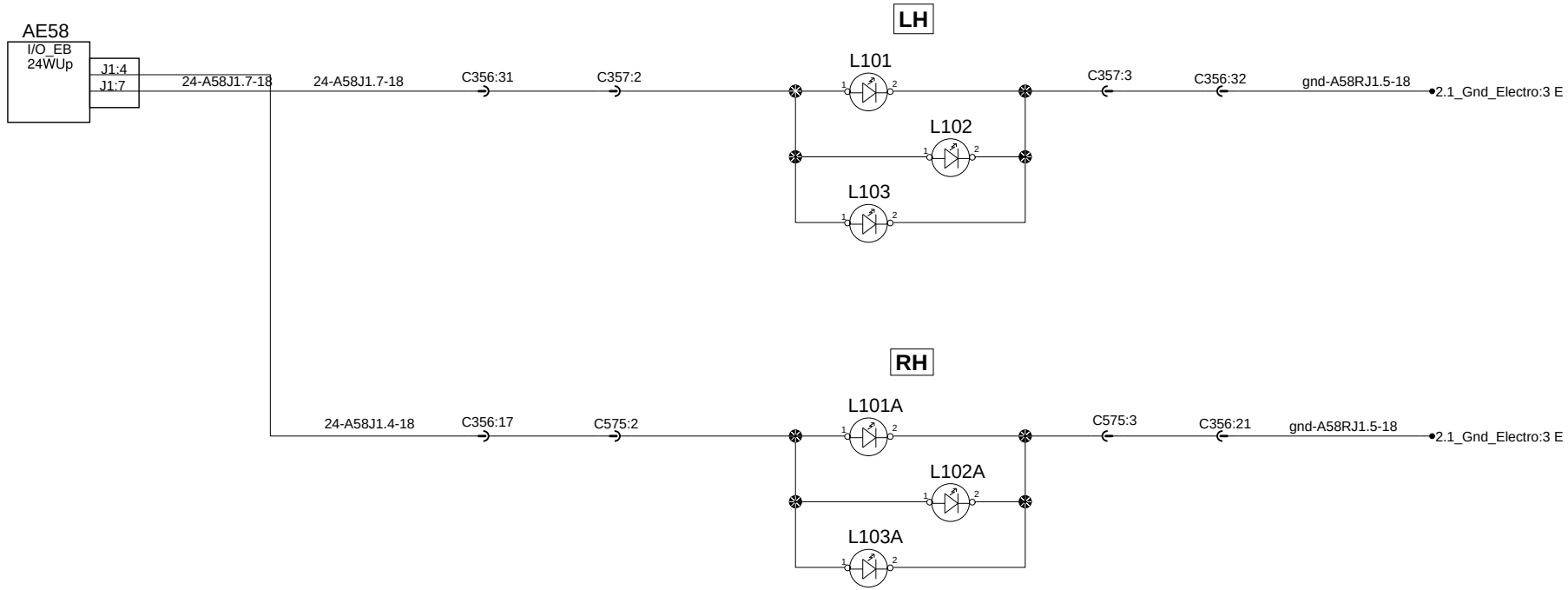

Perimeter lights on both side of the coach

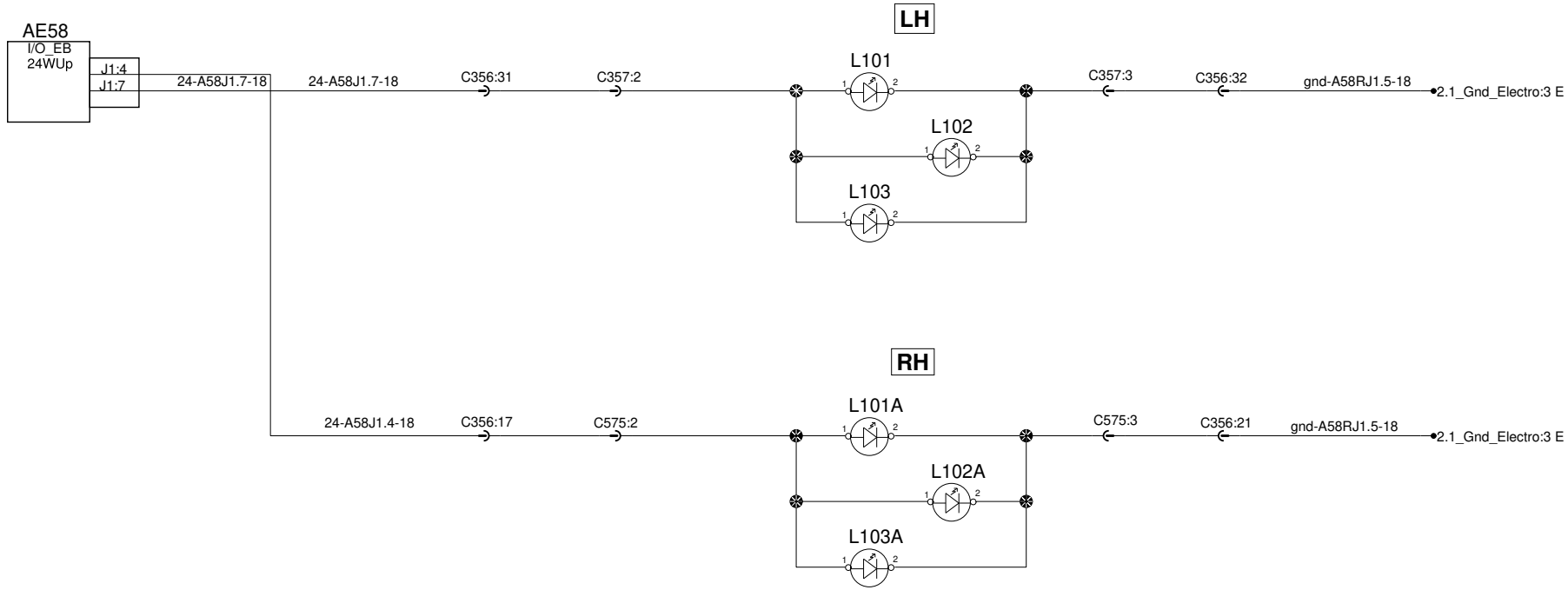

Additional perimeter lights on both side of the coach

Refer to P26.6 (STD) for all details

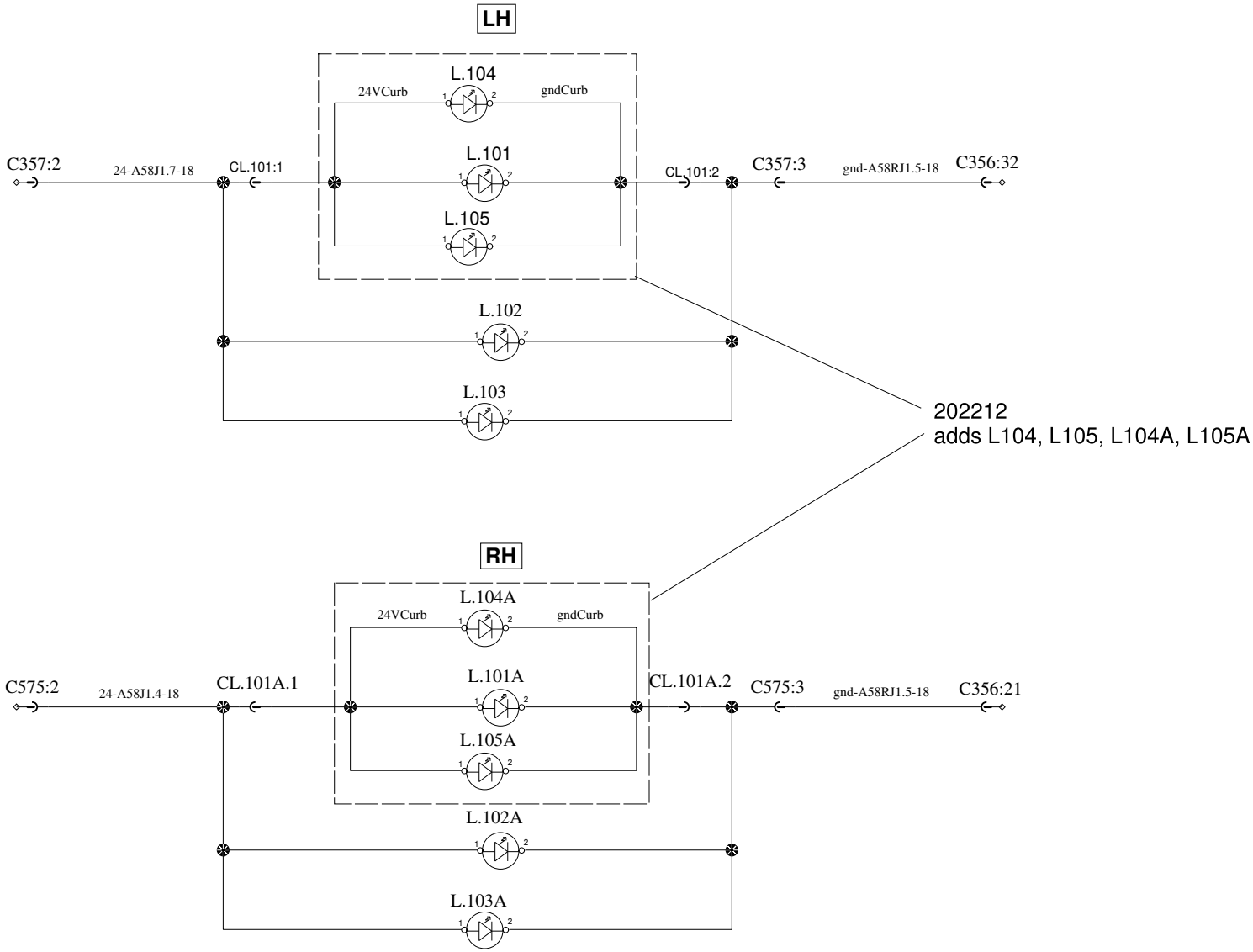

Windows ajar

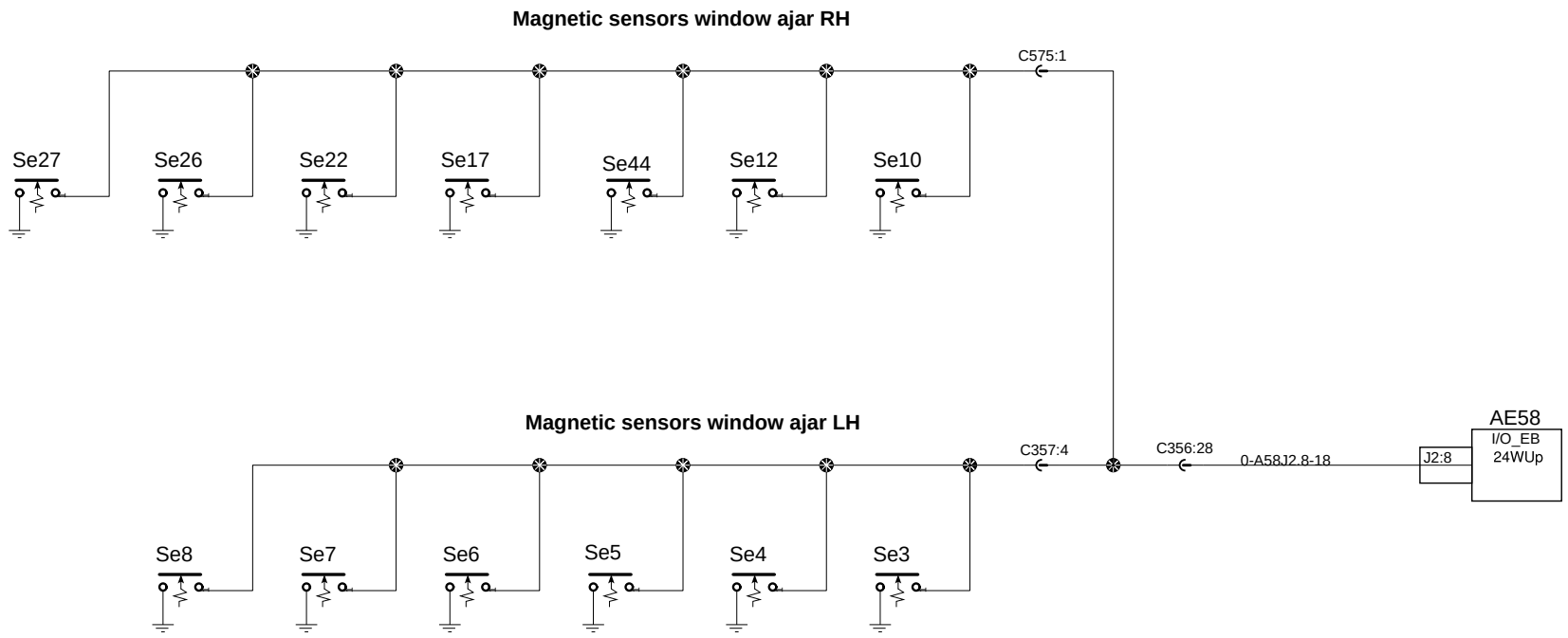

Digital clock & Back-up Camera

12 or 24 hours digital clock

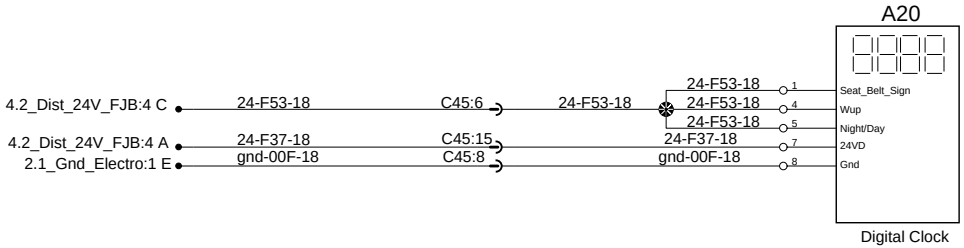

Back-up camera

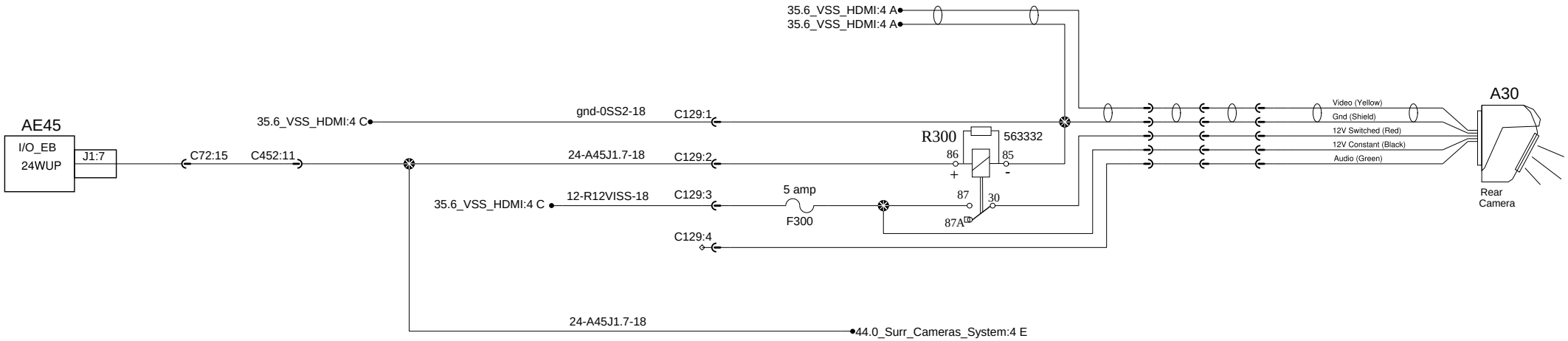

PREVOST®	WIRING DIAGRAM	No:D062140	Page:28.1	Rev:0

Electronic destination signs

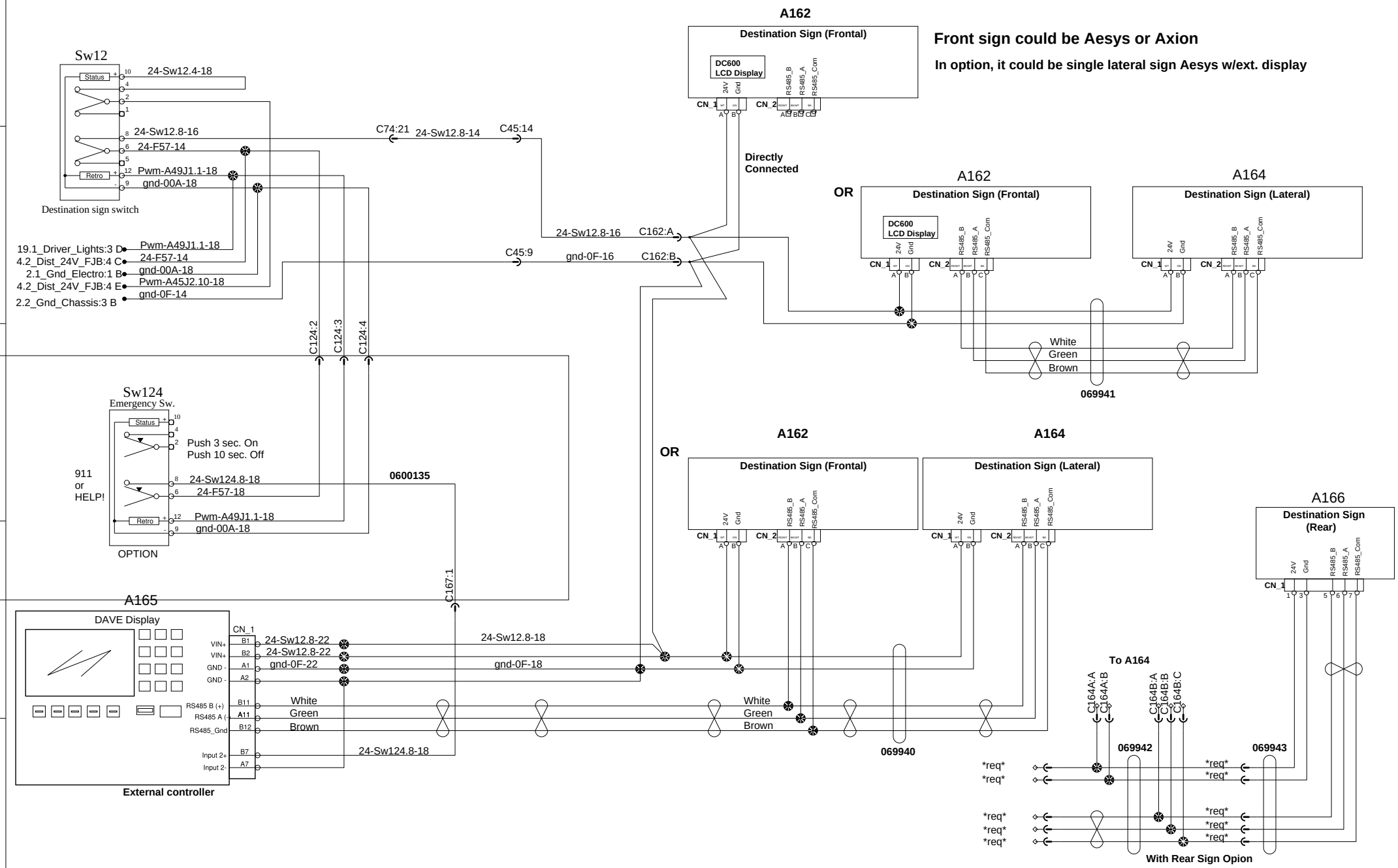

PREVOST®	WIRING DIAGRAM	No:D062140	Page:28.2	Rev:0

Cornering, Front flashers, Markers, Clearance and Head lights

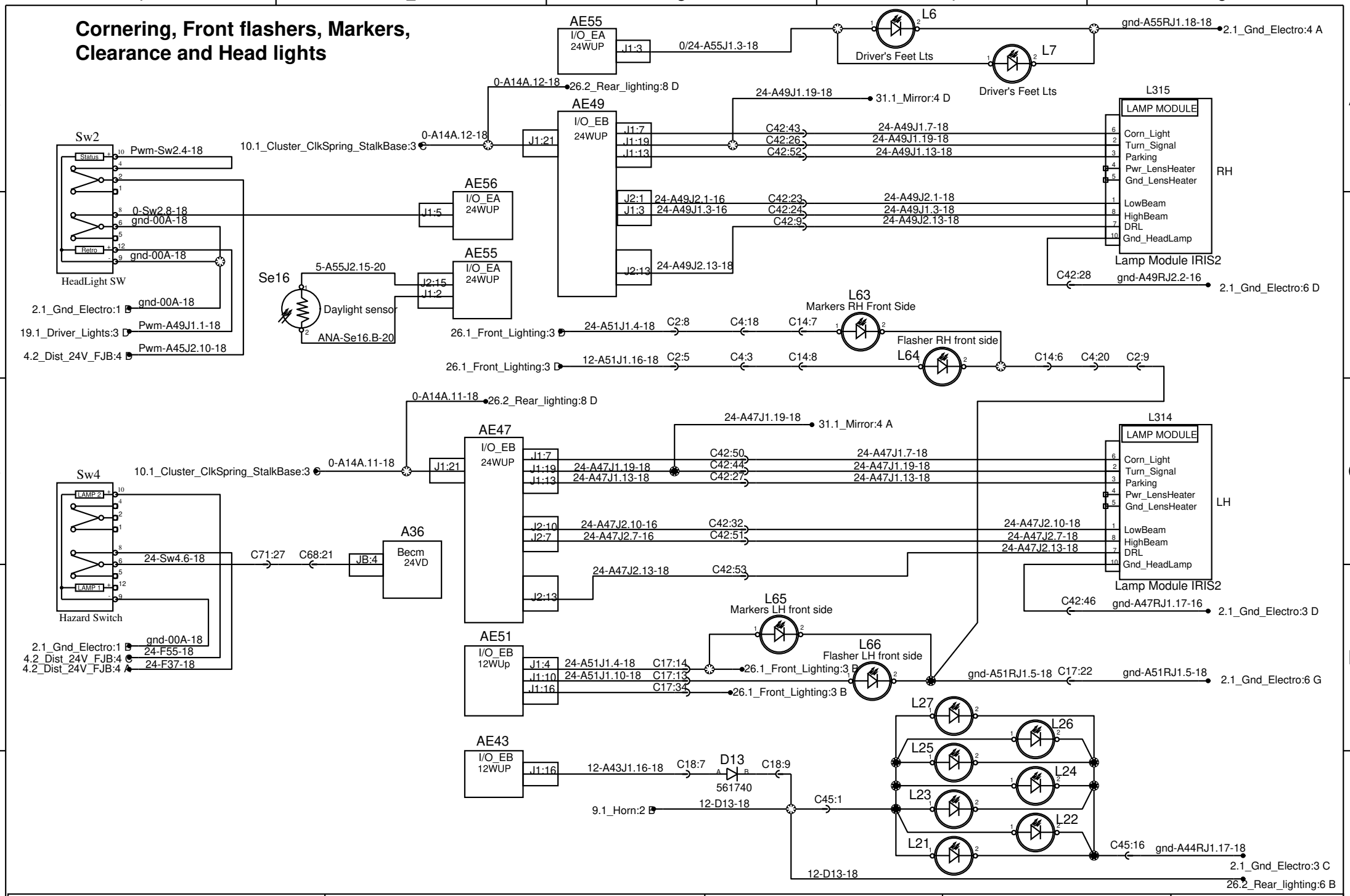

PREVOST®	WIRING DIAGRAM	No:D062140	Page:26.1	Rev:3

Entrance door

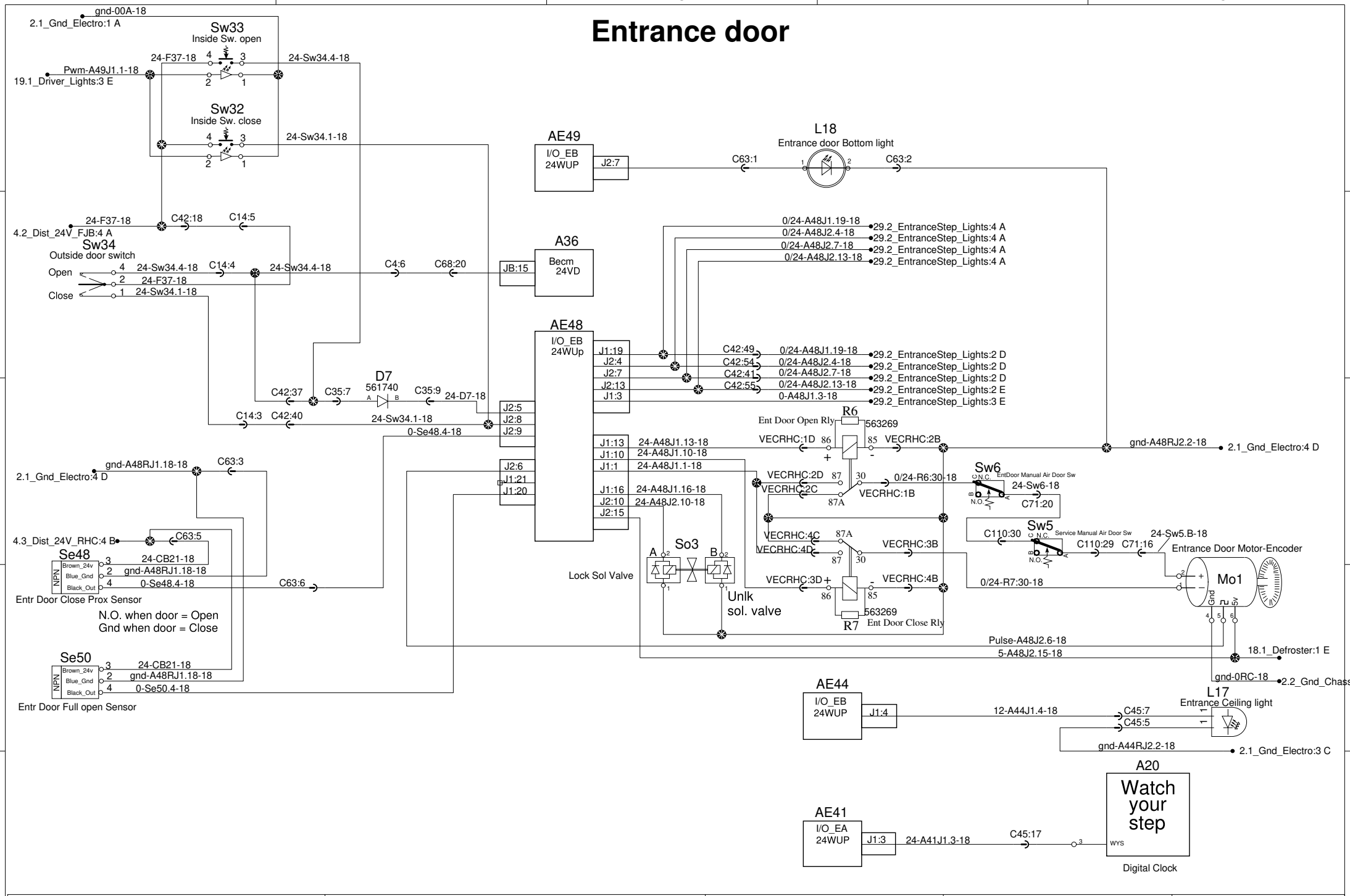

PREVOST®	WIRING DIAGRAM	No:D062140	Page:29.1	Rev:3-5

Entrance door

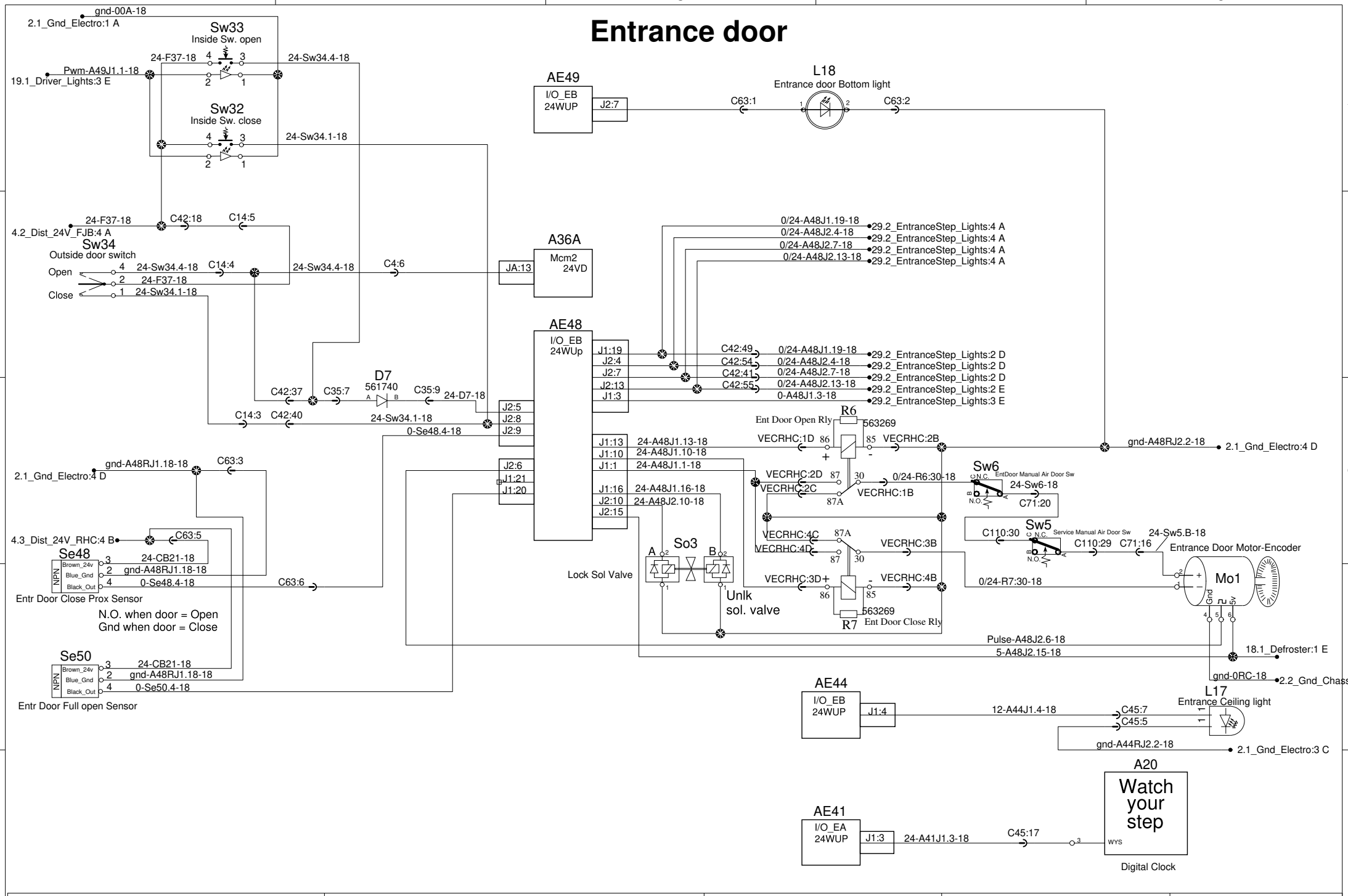

PREVOST®	WIRING DIAGRAM	No:D062140	Page:29.1	Rev:9

Entrance Step lights

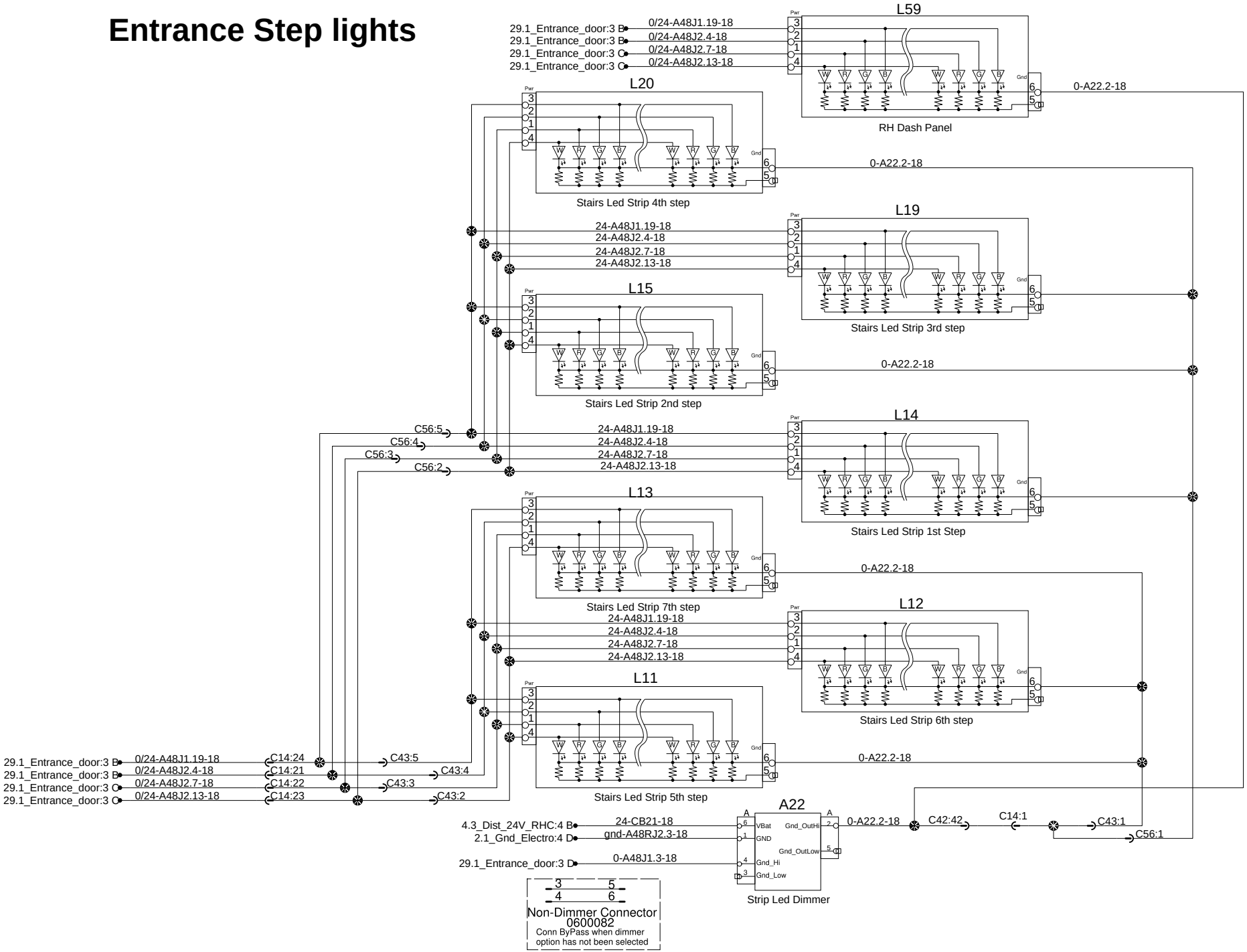

PREVOST®	WIRING DIAGRAM	No:D062140	Page:29.2	Rev:0

Driver Window

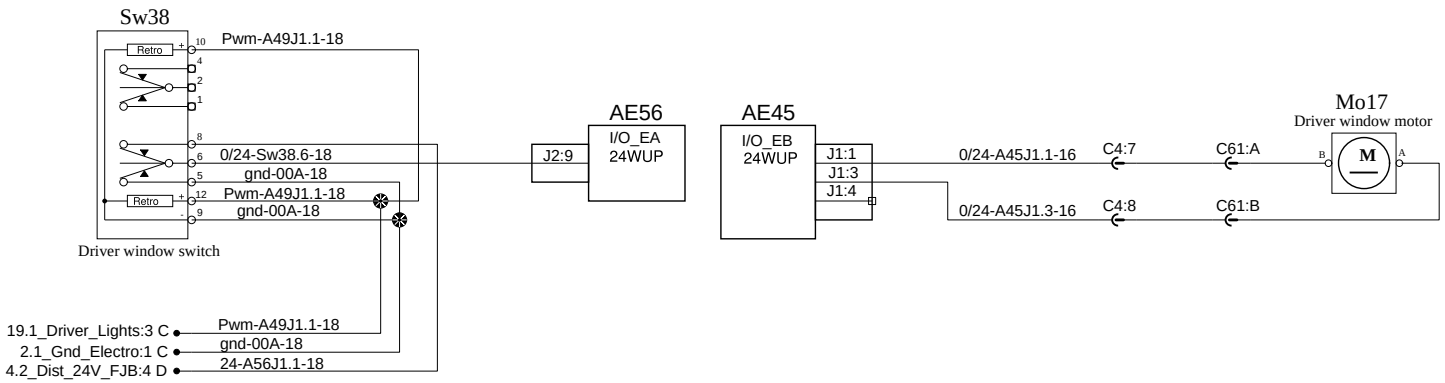

12V Outlets and USB Charger

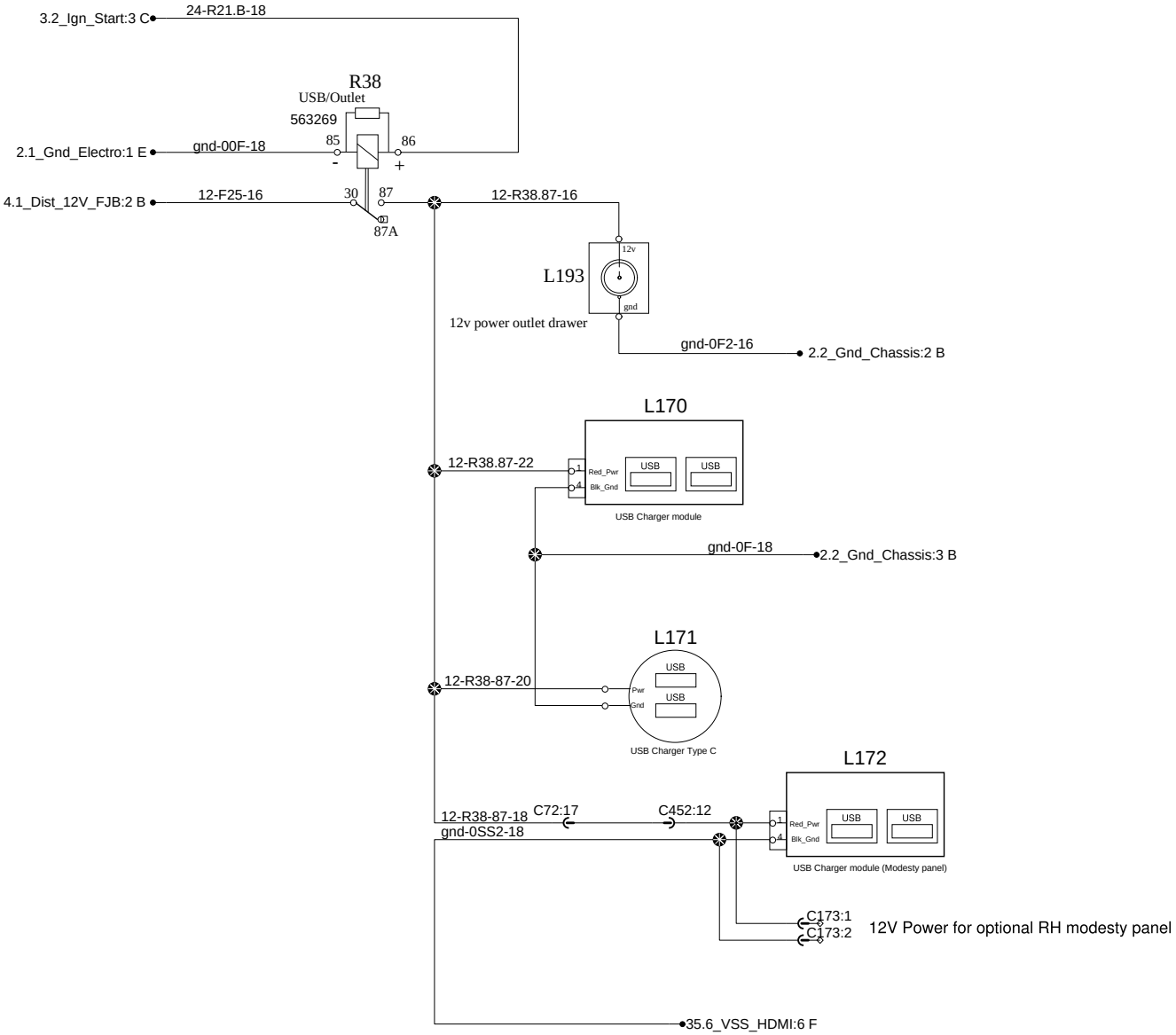

Driver seat with heating function

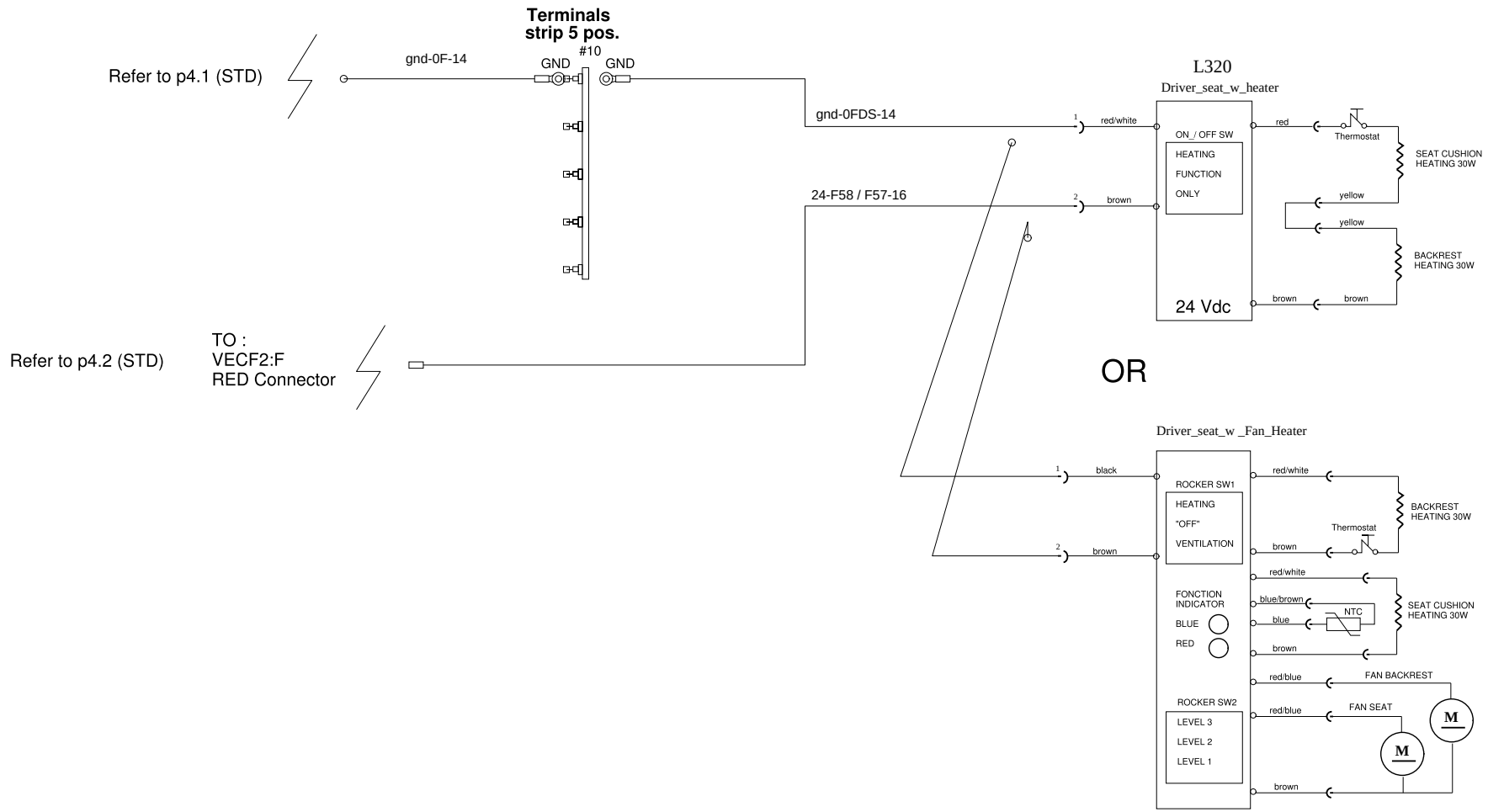

PREVOST®	WIRING DIAGRAM	No:D062140	Page:30.3	Rev:01

Mirrors, 2 adjustments switch and heated

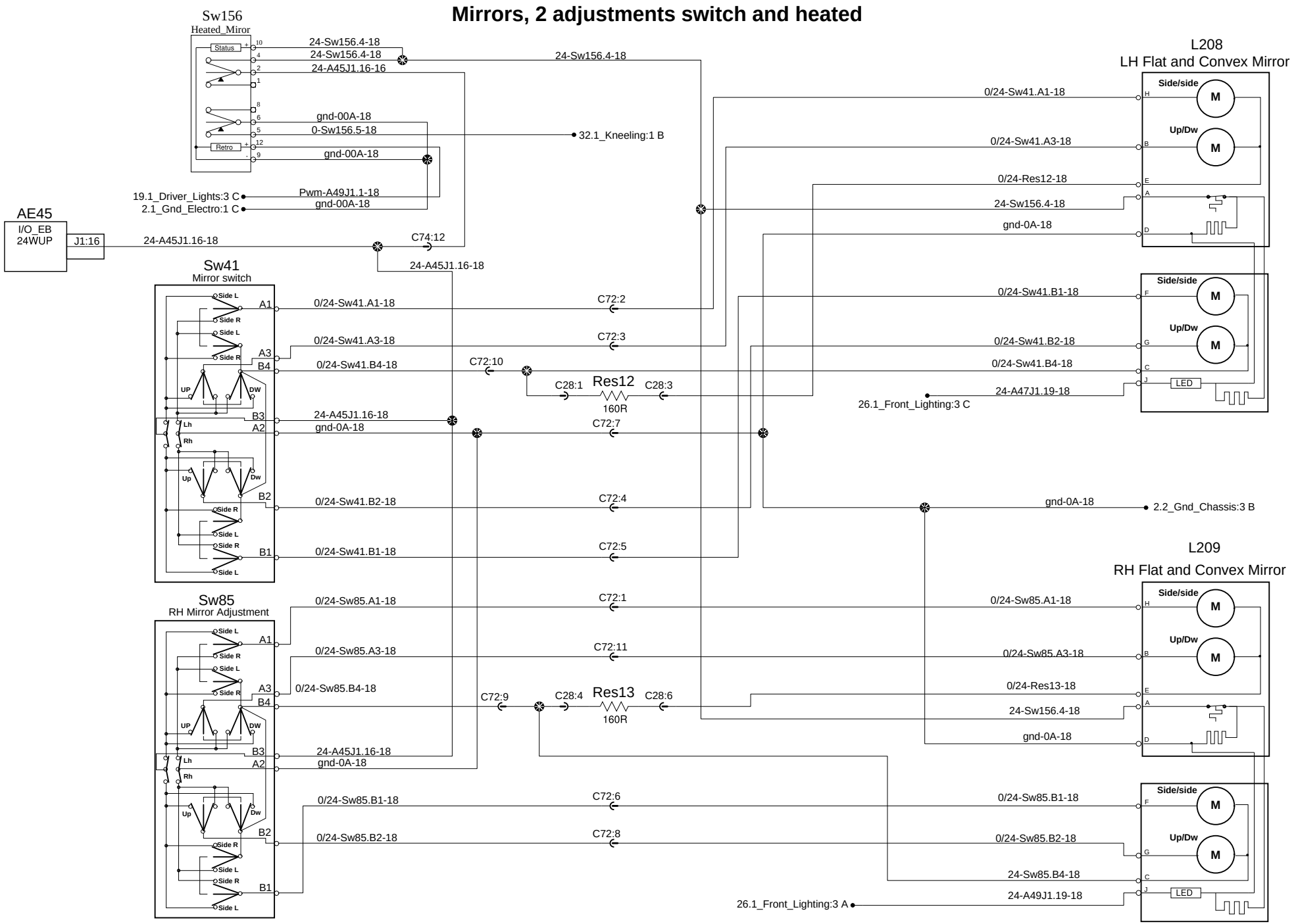

PREVOST®	WIRING DIAGRAM	No:D062140	Page:31.1	Rev:0

Mirrors, 2 adjustments switch and heated

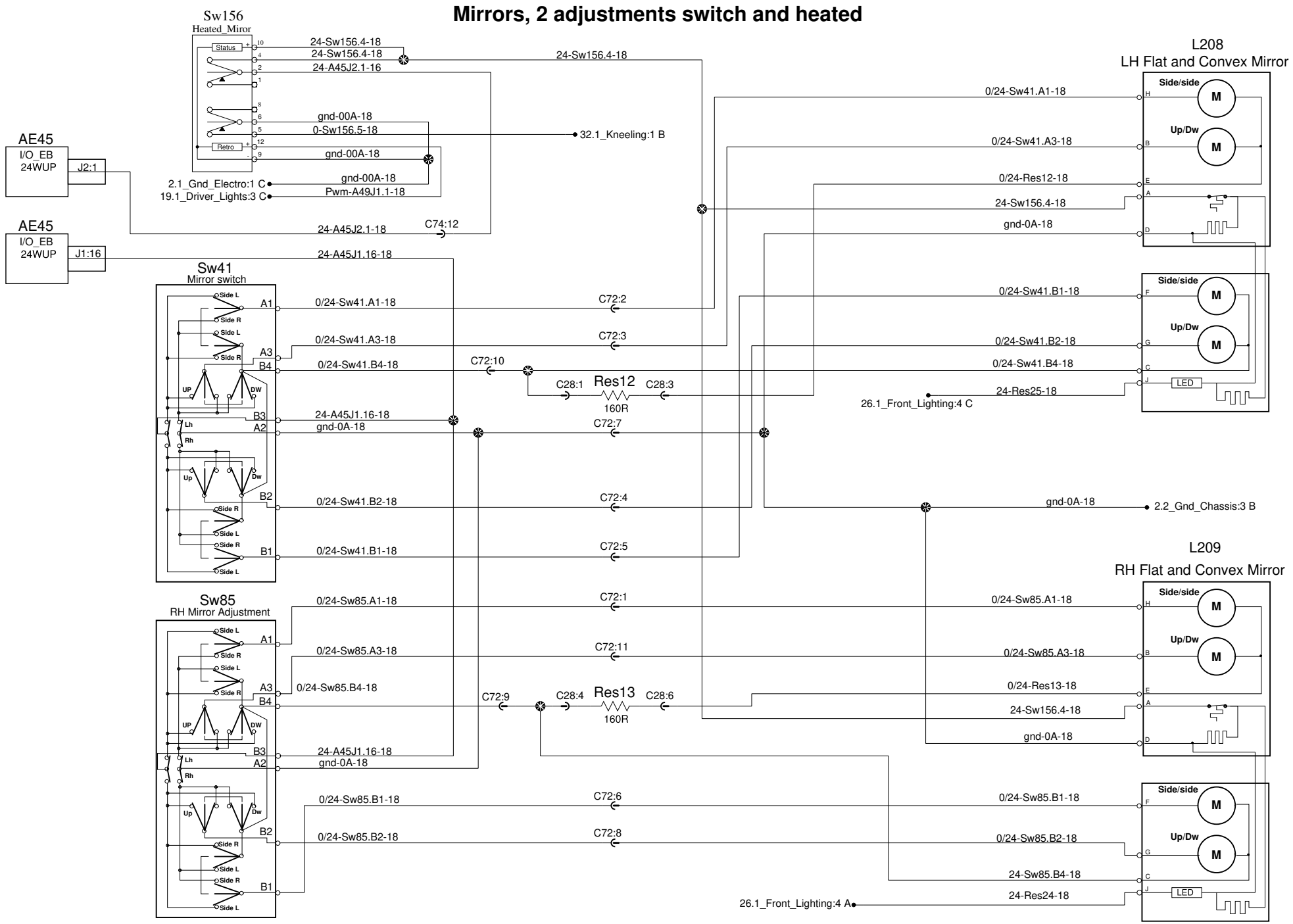

PREVOST®	WIRING DIAGRAM	No:D062140	Page:31.1	Rev:5

Electronic Mirrors (eMirrors)

Info: Mirrors remains ON about 2 minutes after Ignition key turn OFF

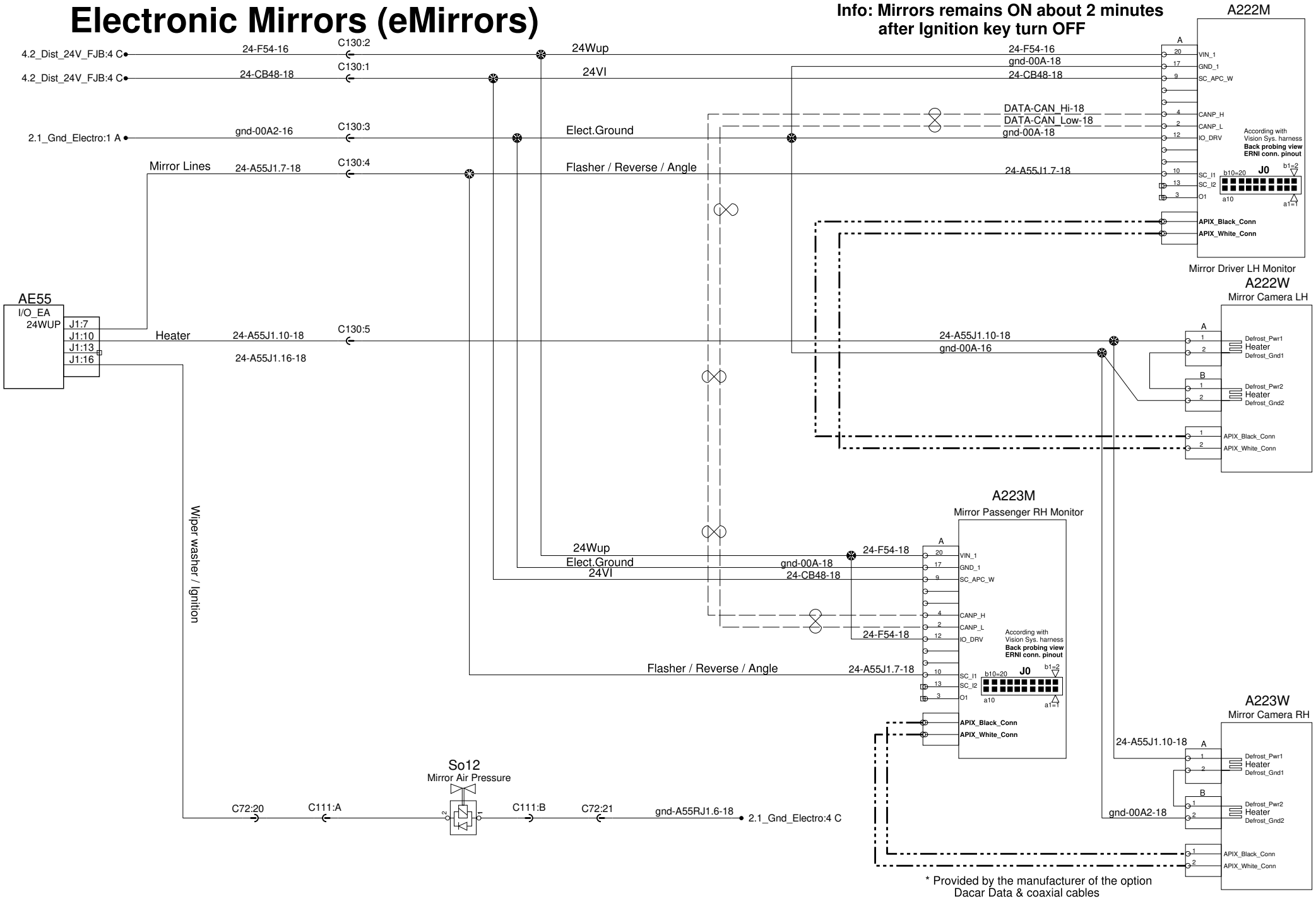

* Provided by the manufacturer of the option
Dacar Data & coaxial cables

PREVOST®	WIRING DIAGRAM	No:D062140	Page:31.2	Rev:1

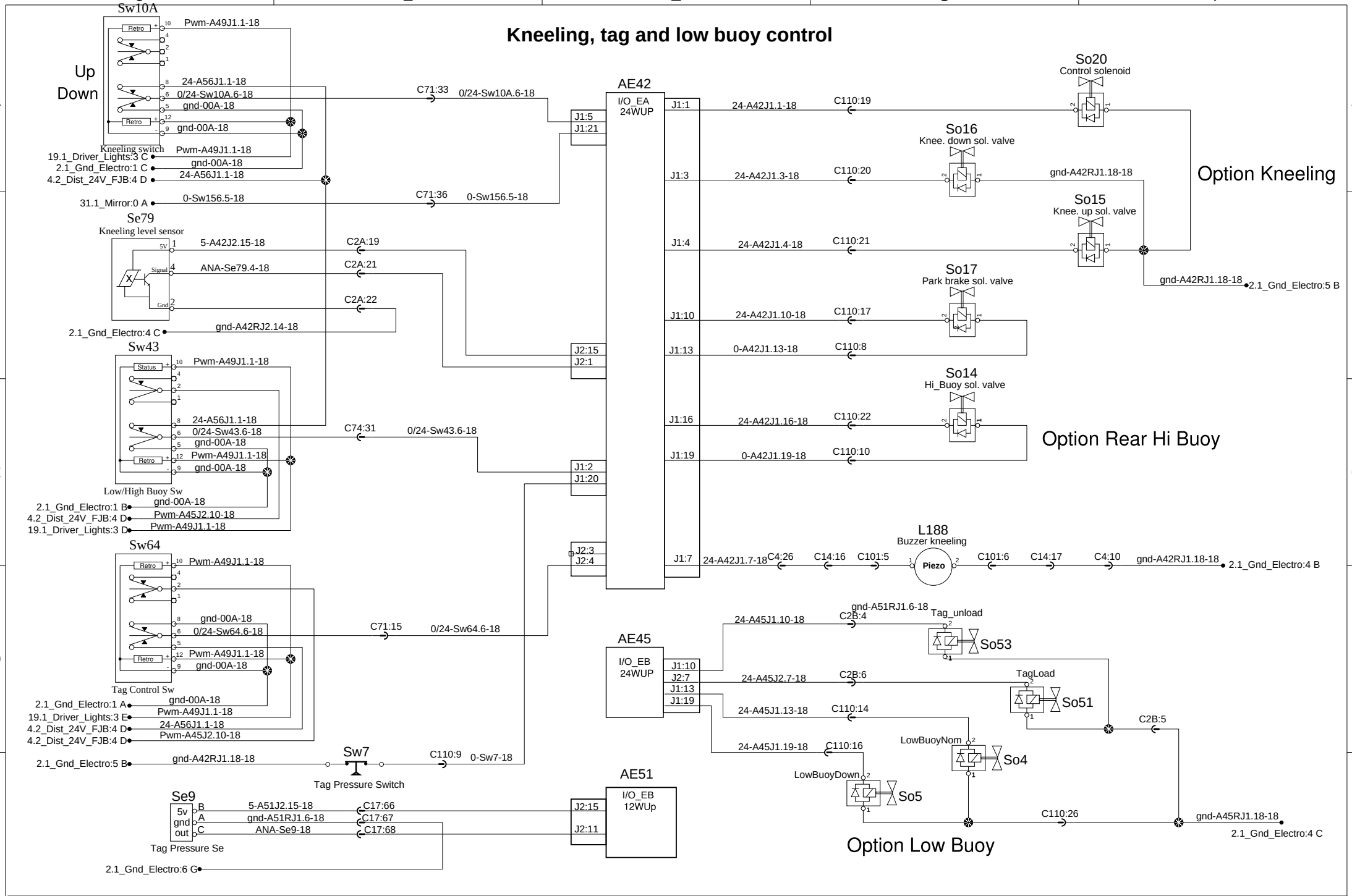

PREVOST®	WIRING DIAGRAM	No:D062140	Page:32.1	Rev:0

Luggage door Lock/Unlock

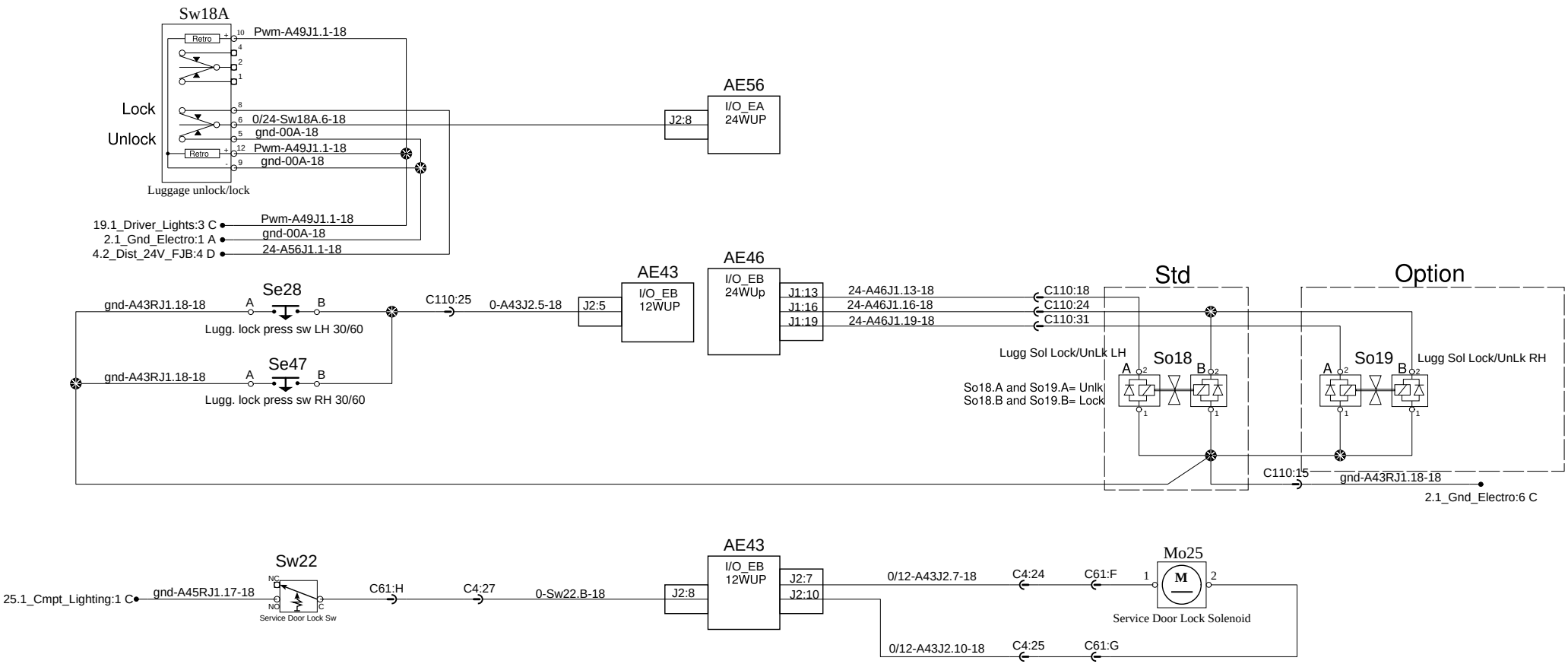

Wipers and washer

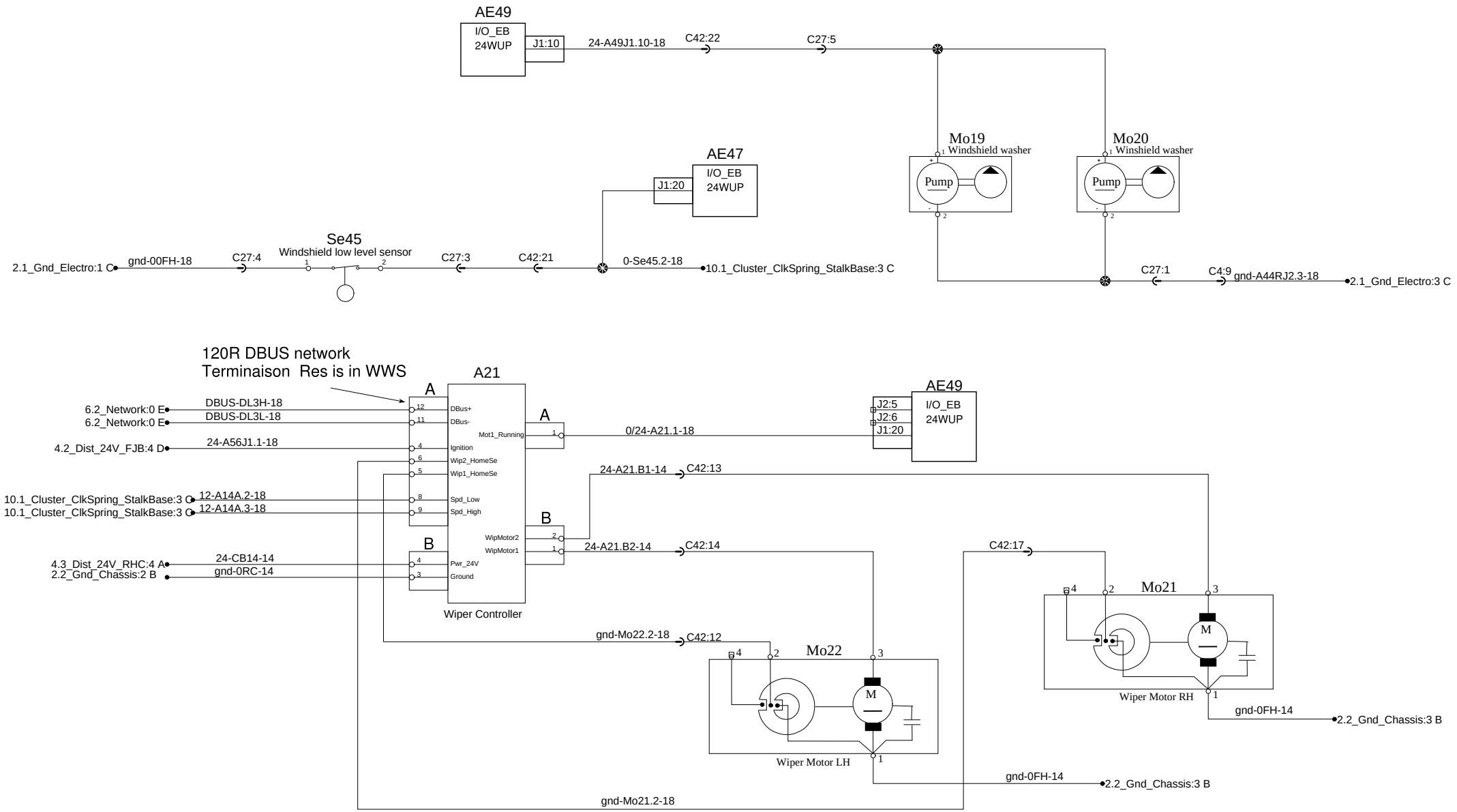

PREVOST®	WIRING DIAGRAM	No:D062140	Page:34.1	Rev:0

Wipers and washer

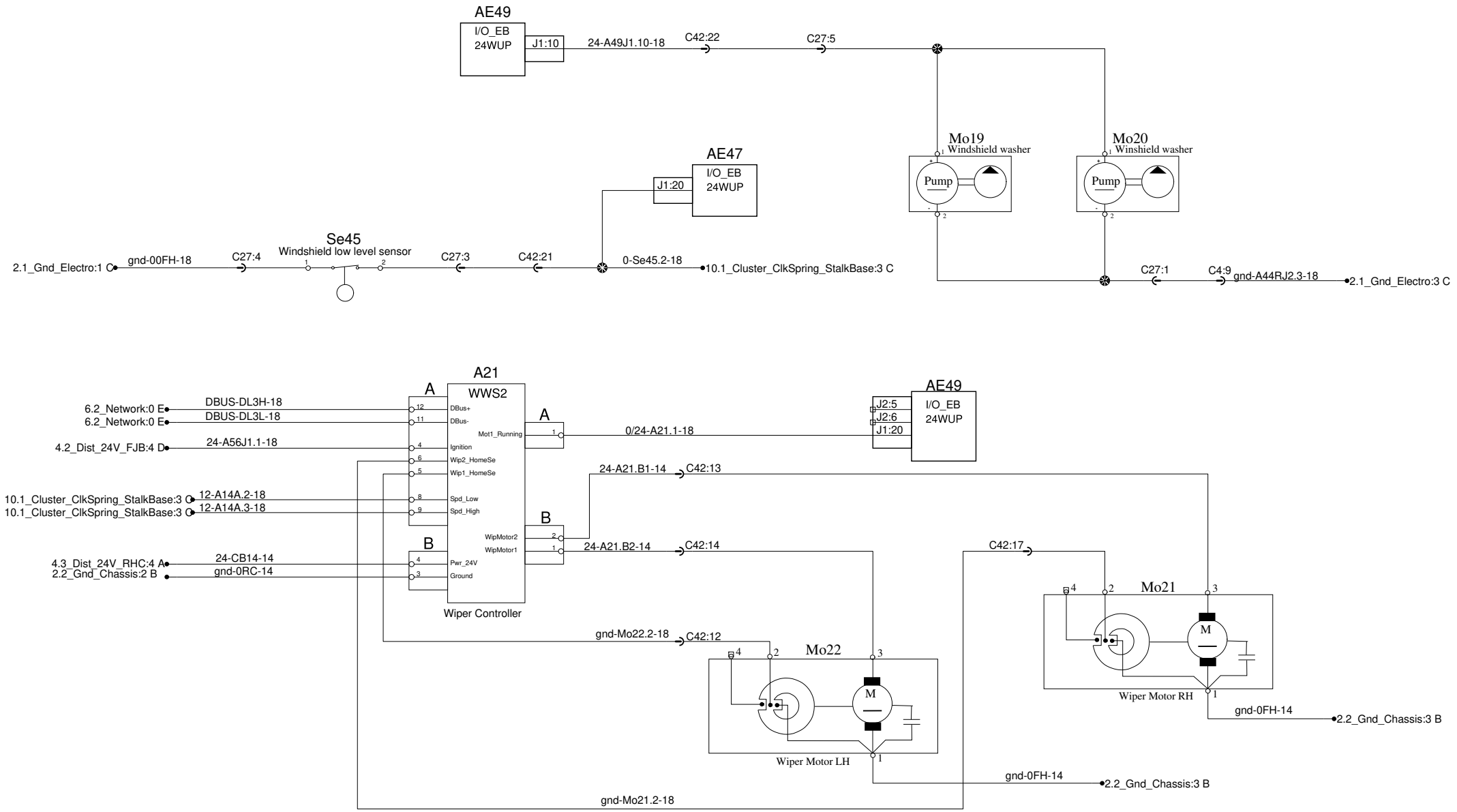

PREVOST®	WIRING DIAGRAM	No:D062140	Page:34.1	Rev:3-5

Speakers arrangement (Delta configuration)

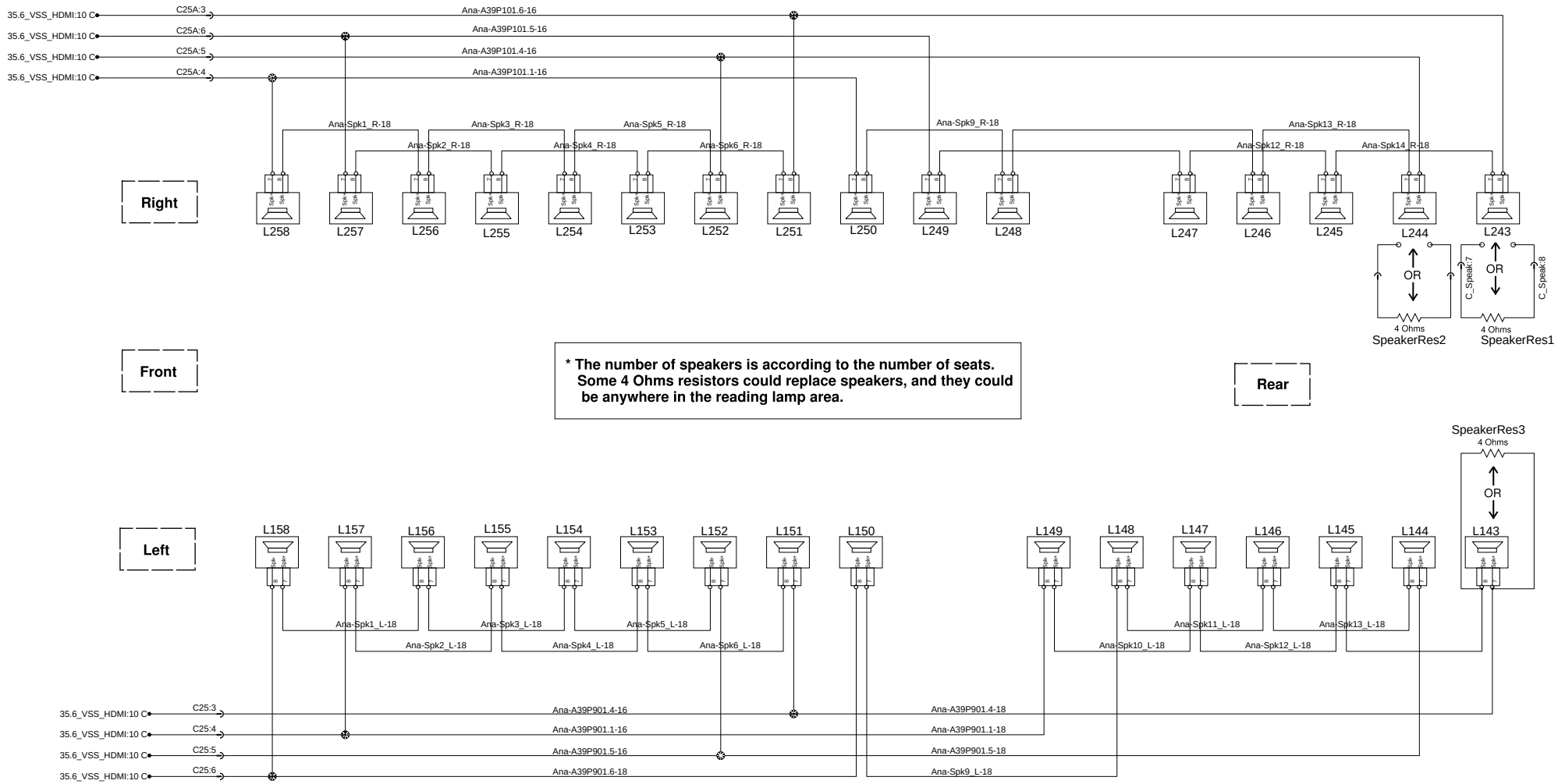

*** The number of speakers is according to the number of seats. Some 4 Ohms resistors could replace speakers, and they could be anywhere in the reading lamp area.**

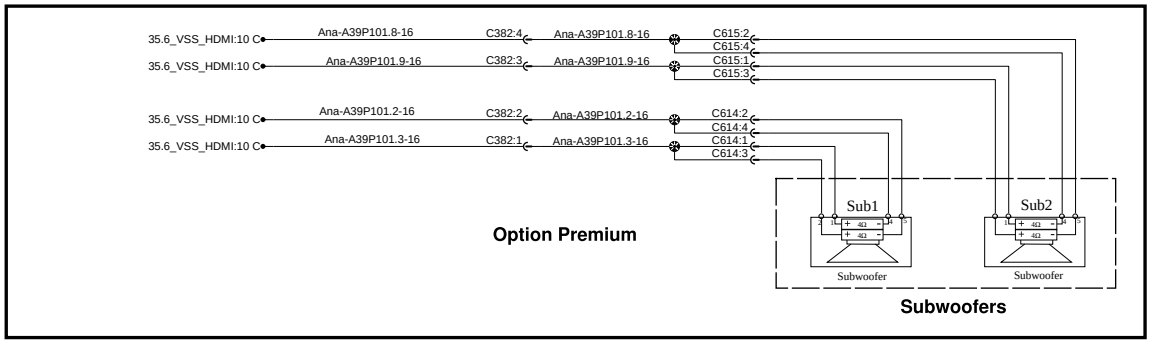

Rev:0

Page:35.2

No:D062140

WIRING DIAGRAM

PREVOST®

Customer Adaptation
Additionnal subwoofers

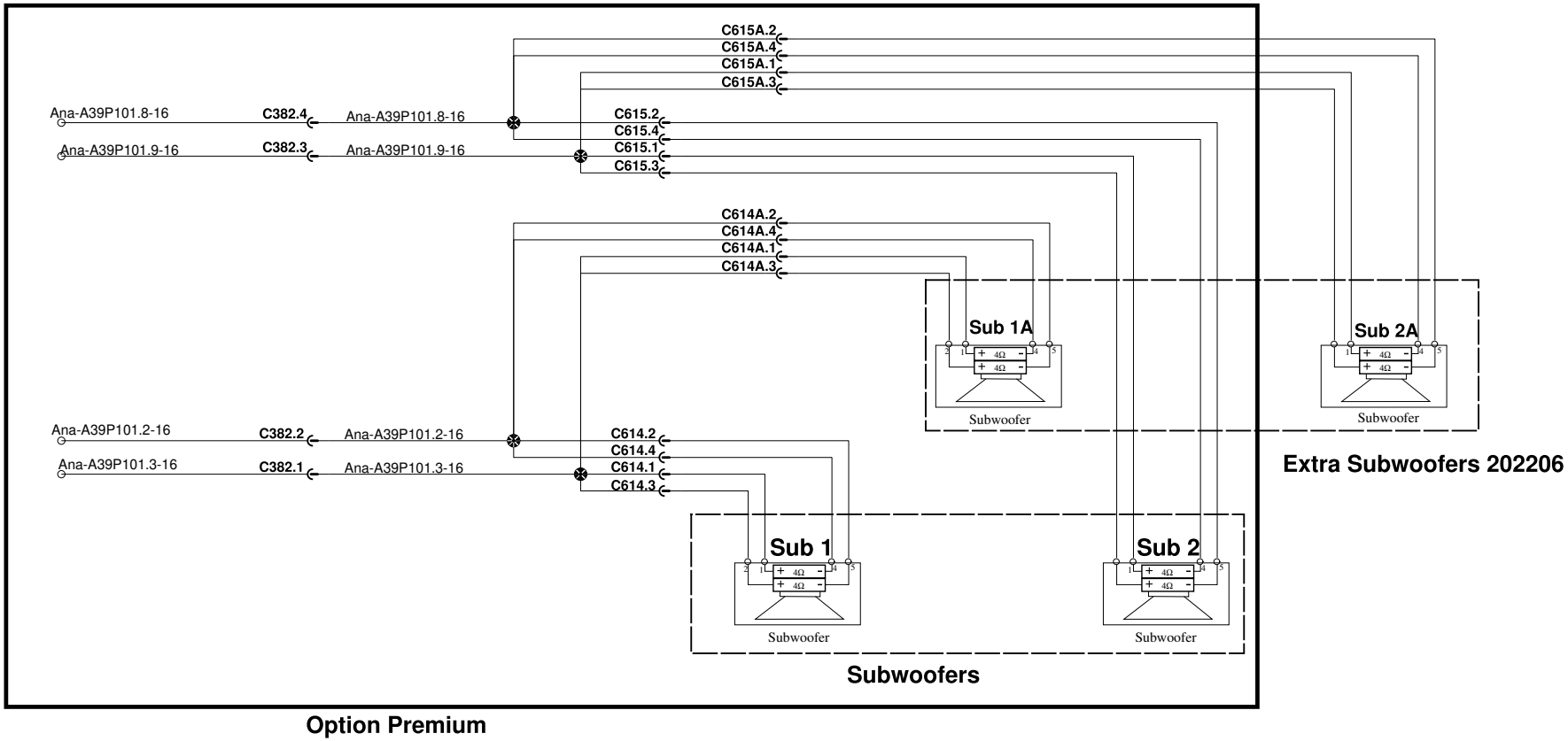

Option Premium

PREVOST®	WIRING DIAGRAM	No:D062140	Page:35.2 SP1	Rev:01

Video distribution HDMI

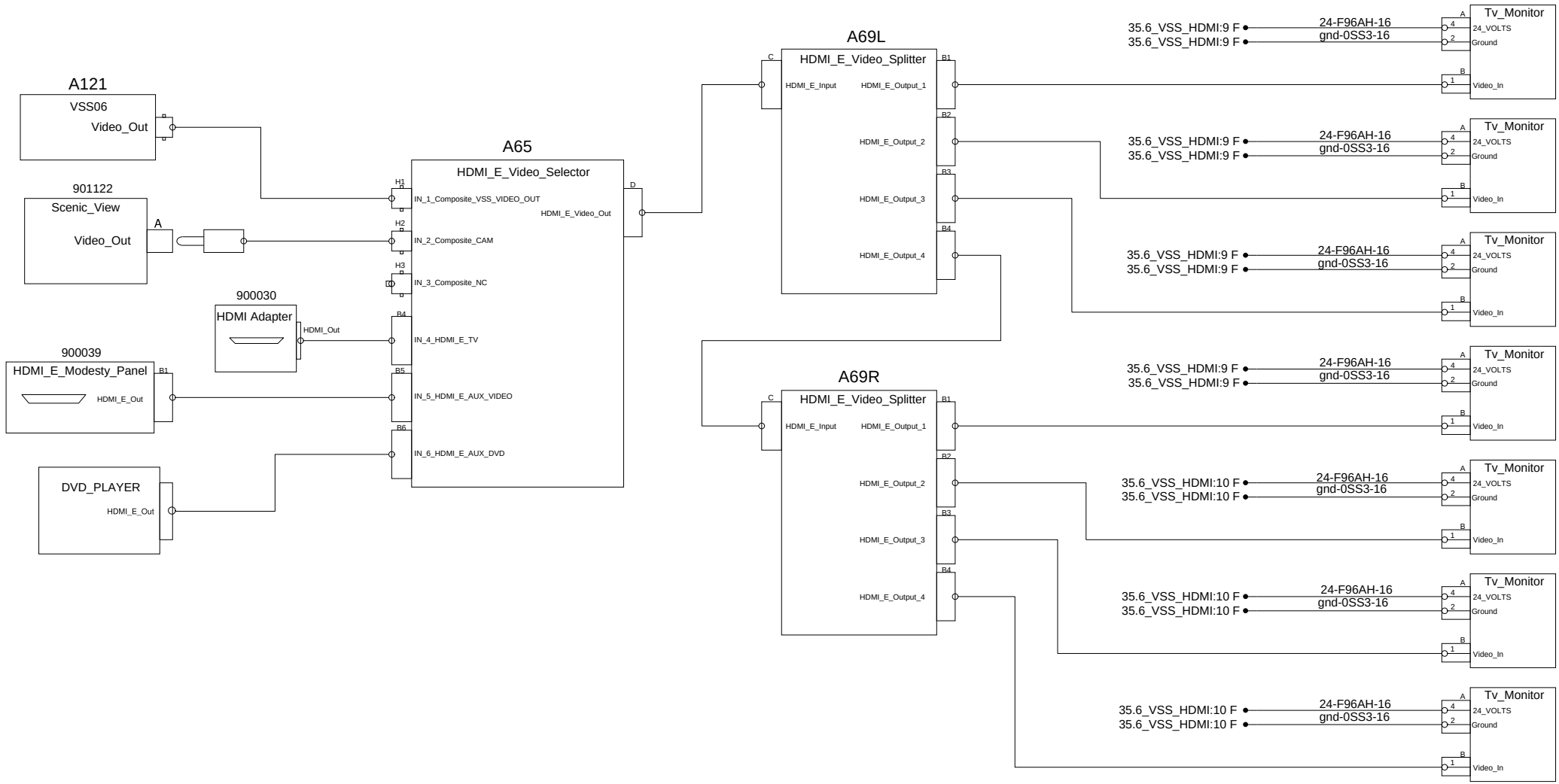

PREVOST®	WIRING DIAGRAM	No:D062140	Page:35.3	Rev:0

AUDIO VIDEO SYSTEM

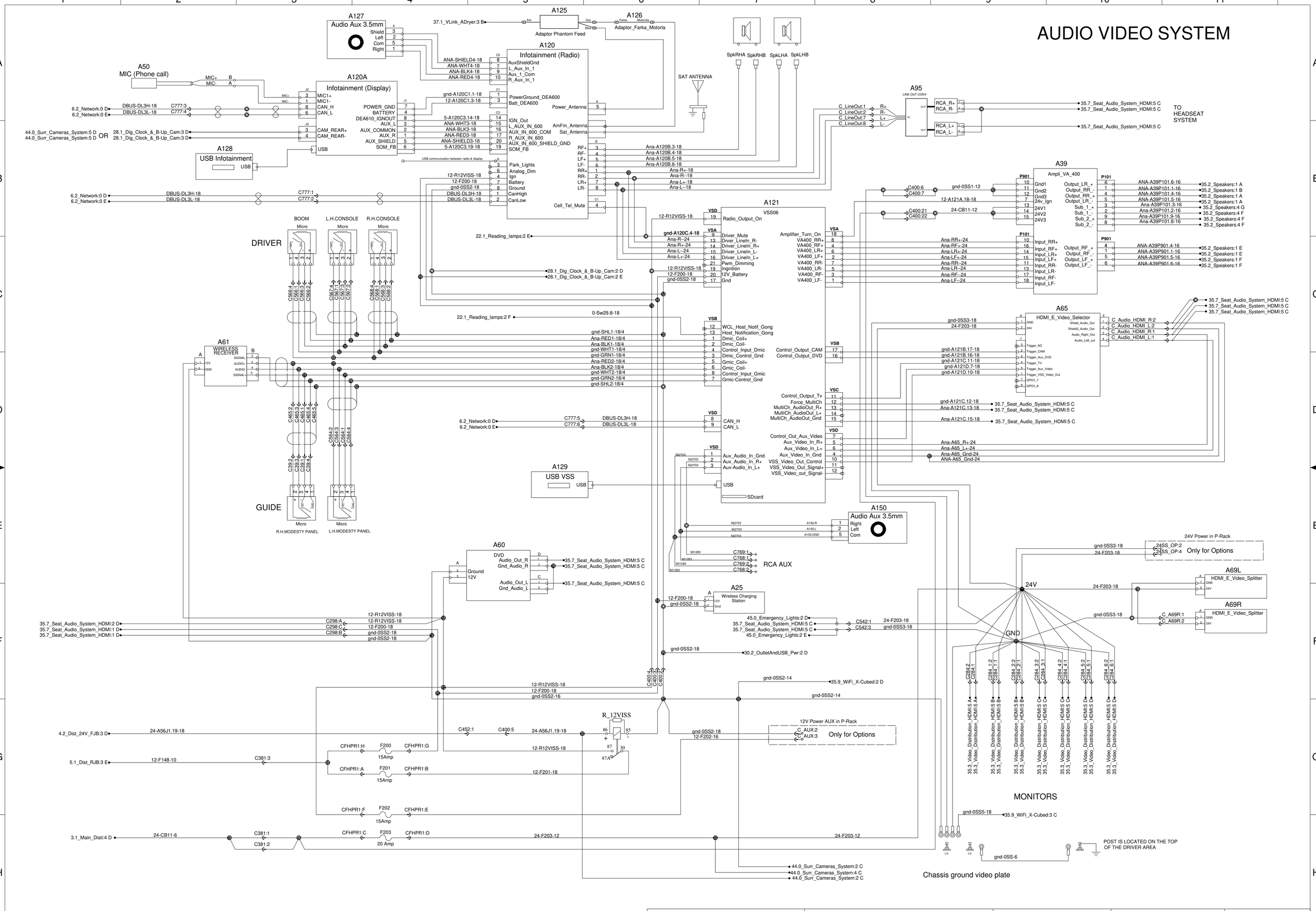

PREVOST®	WIRING DIAGRAM	No:D062140	Page:35.6	Rev:02

8 channels seat audio system HDMI

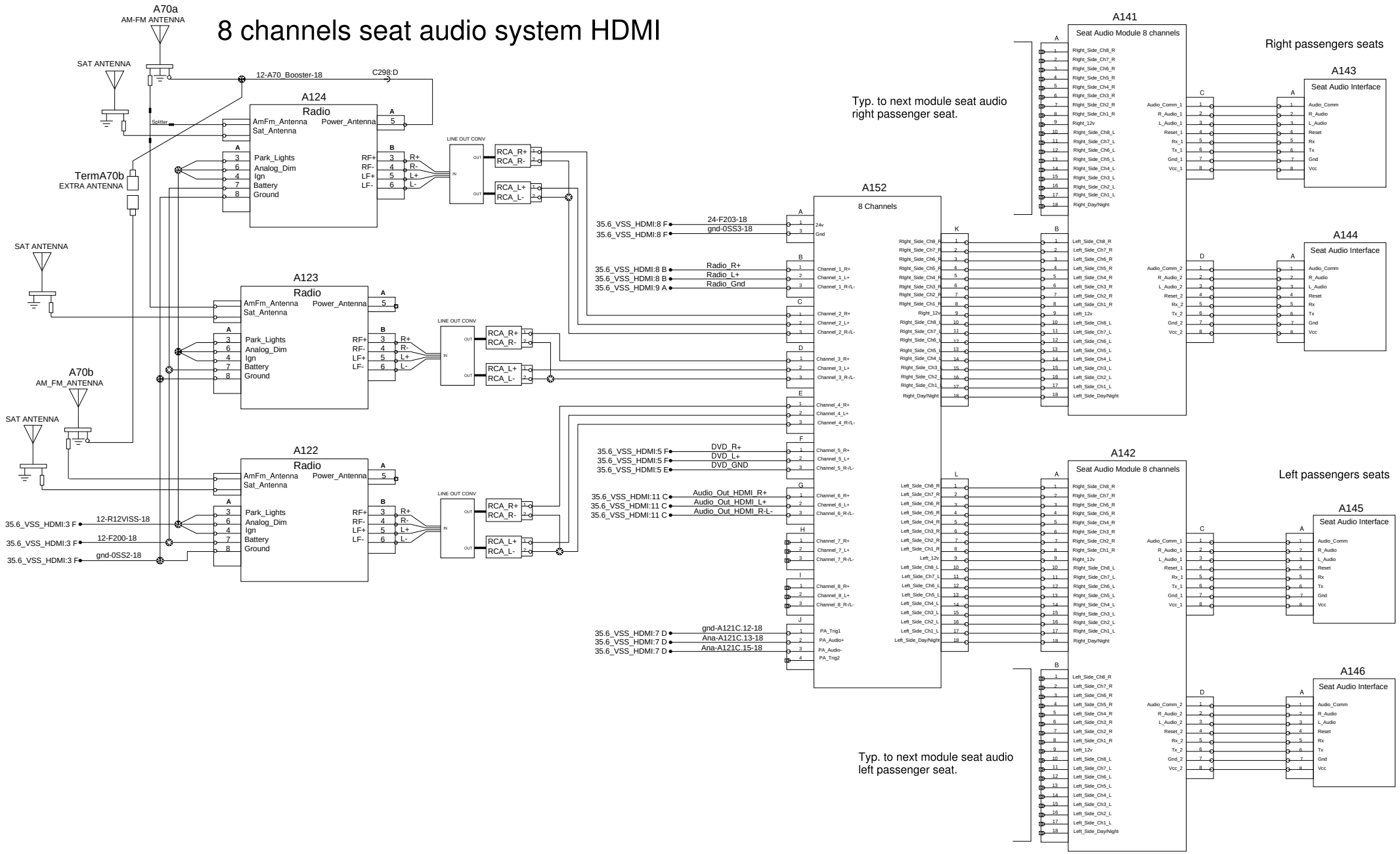

PREVOST®	WIRING DIAGRAM	No:D062140	Page:35.7	Rev:0

WIFI - Wireless System Option

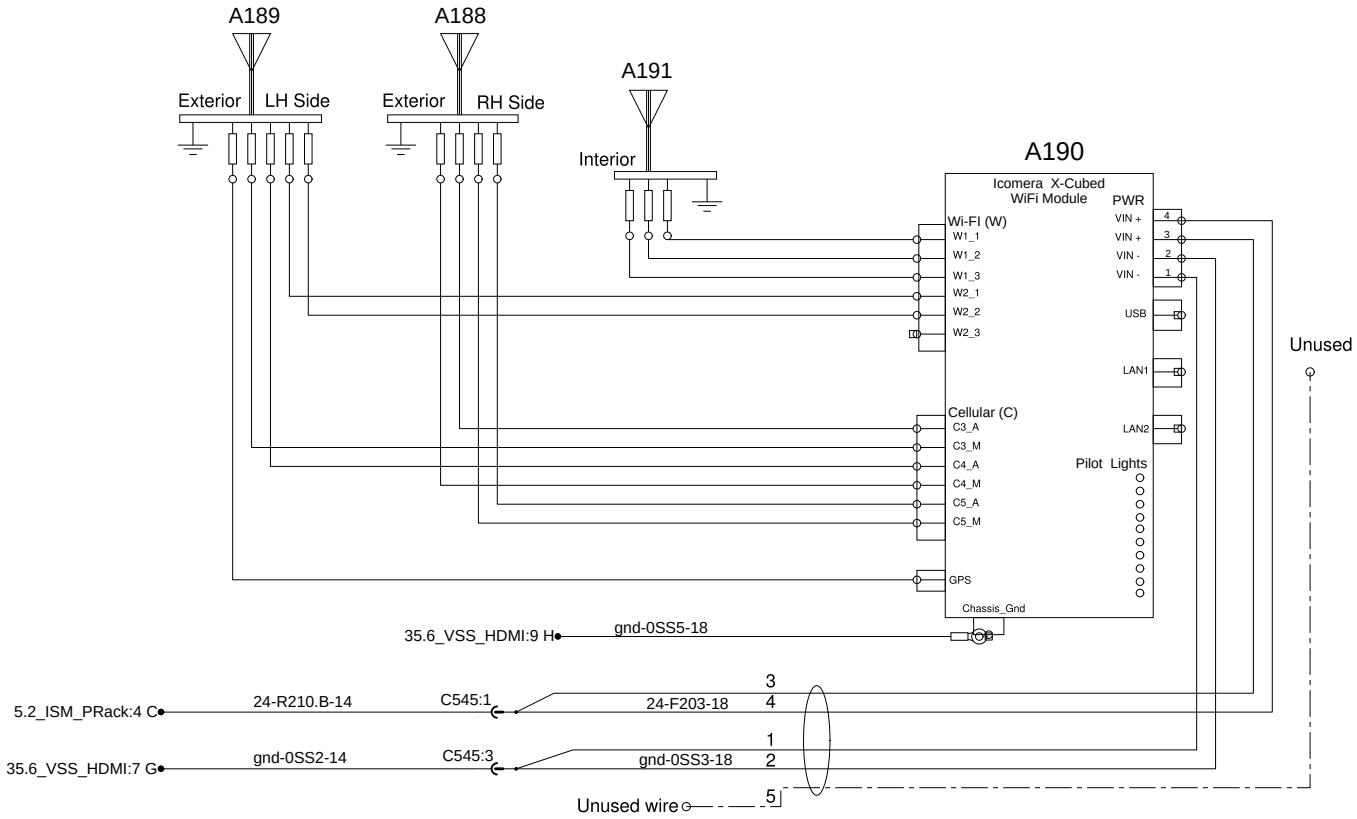

PREVOST®	WIRING DIAGRAM	No:D062140	Page:35.9	Rev:0

Wheel chair lift Ricon 9000

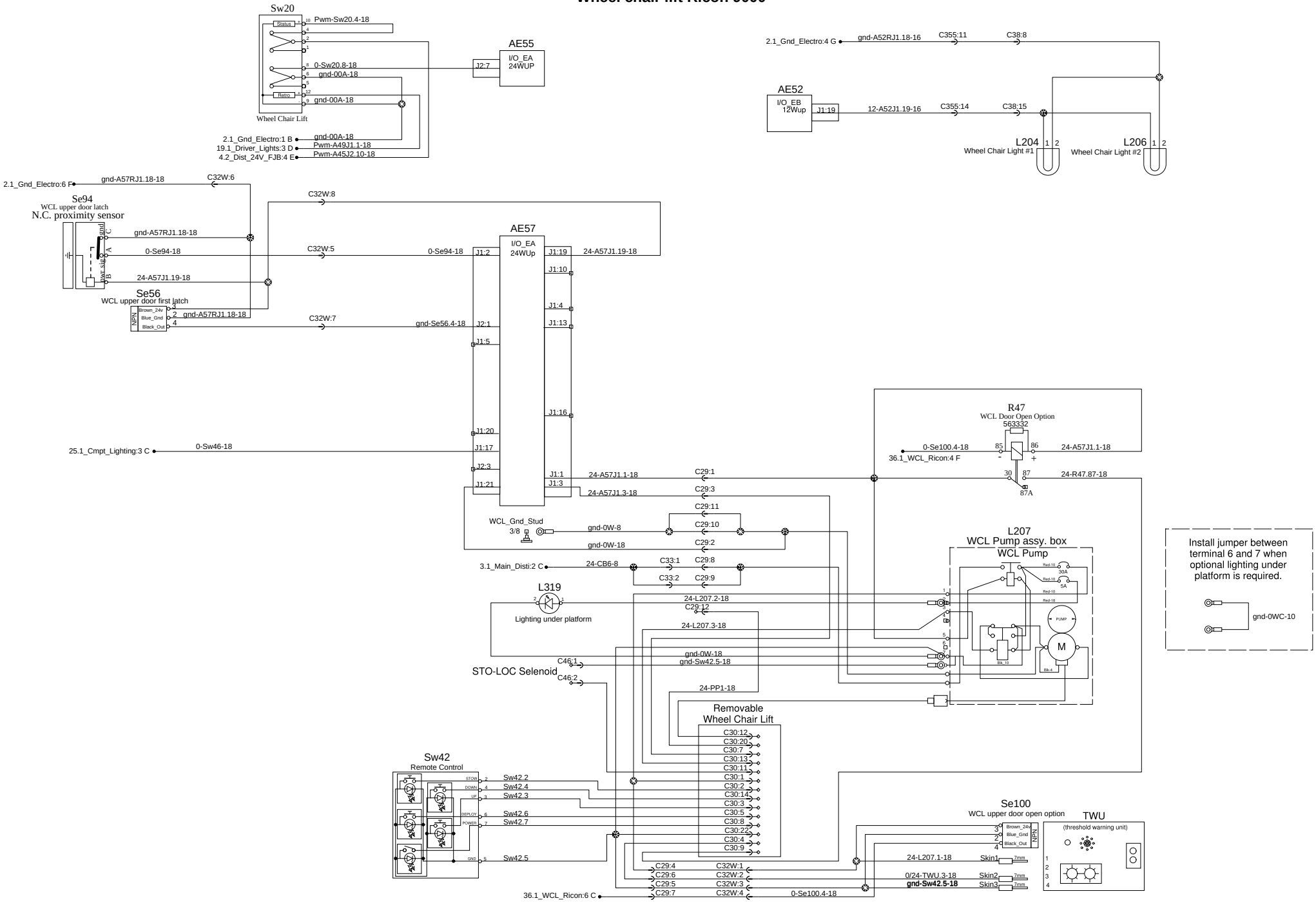

Rev:0

Page:36.1

No:D062140

WIRING DIAGRAM

PREVOST®

Volvo Link TGW

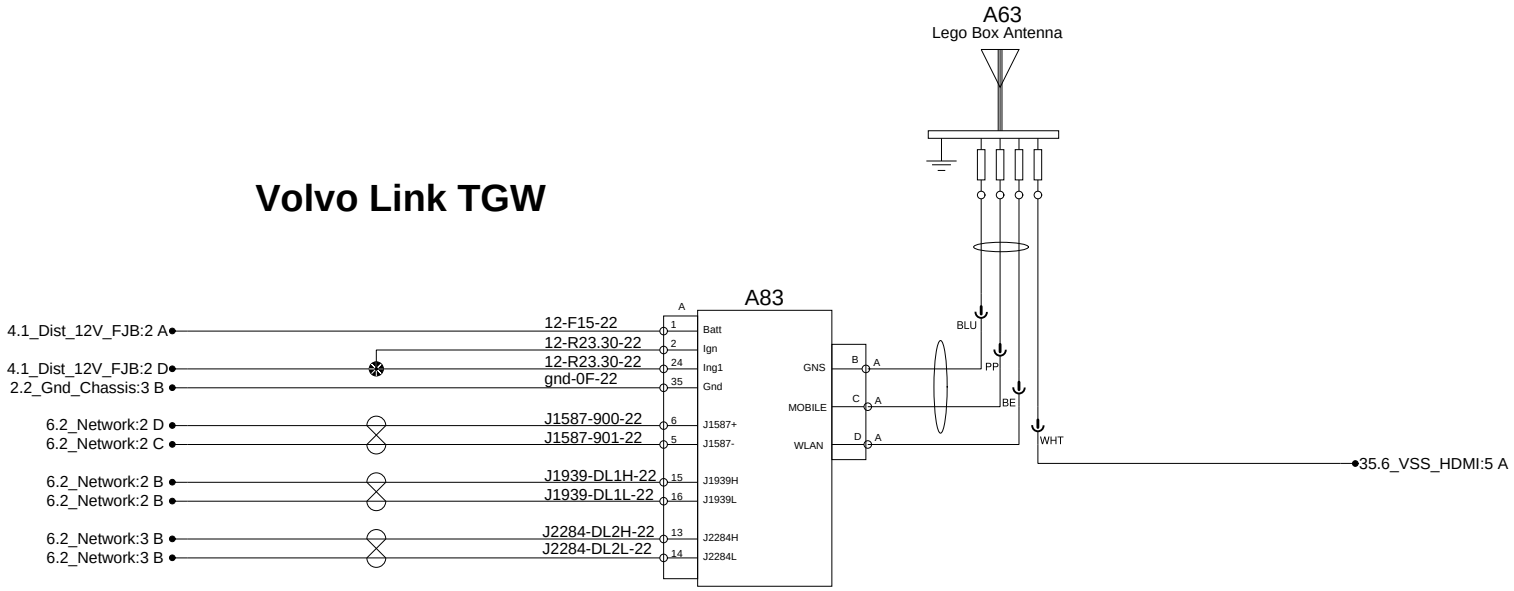

Air Dryer Electric Control and Heater

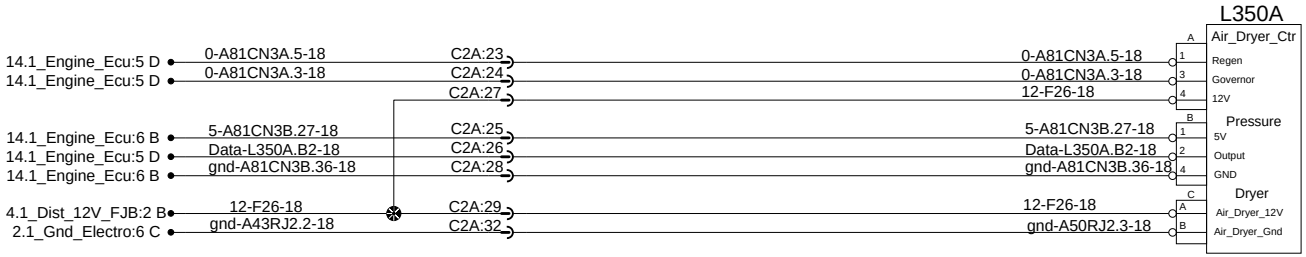

Volvo Link TGW

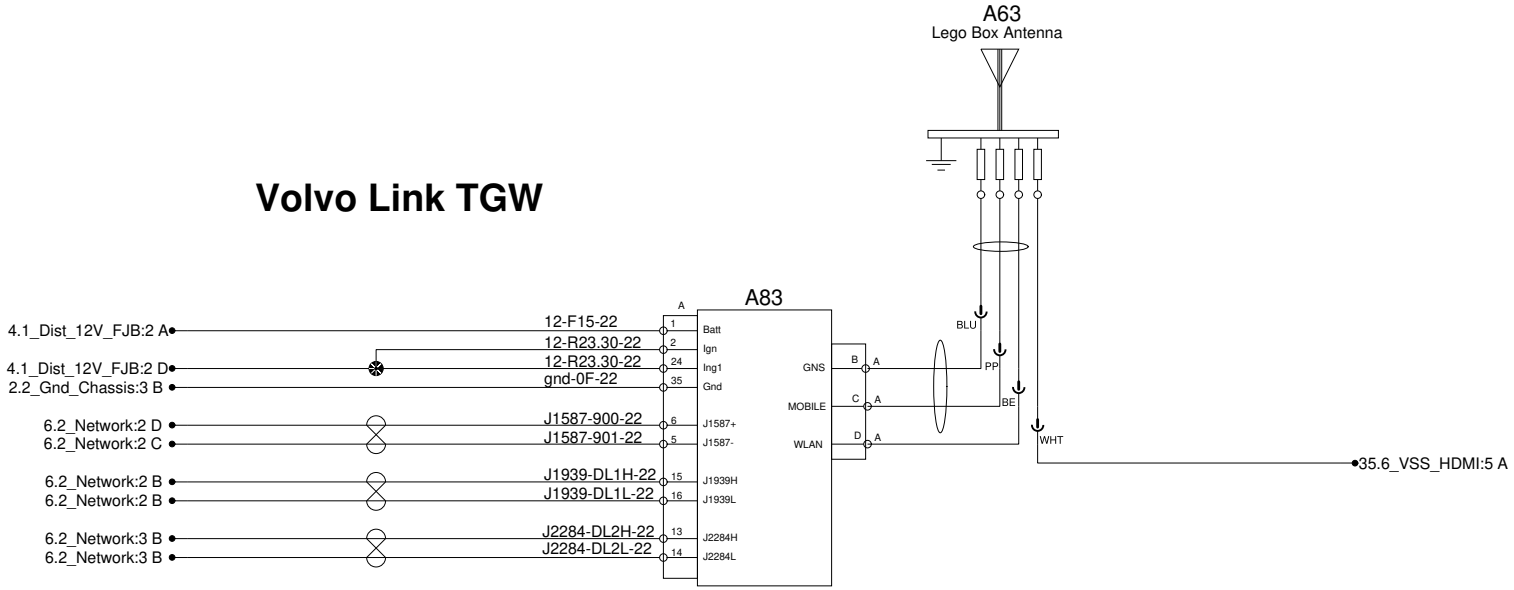

Air Dryer Electric Control and Heater

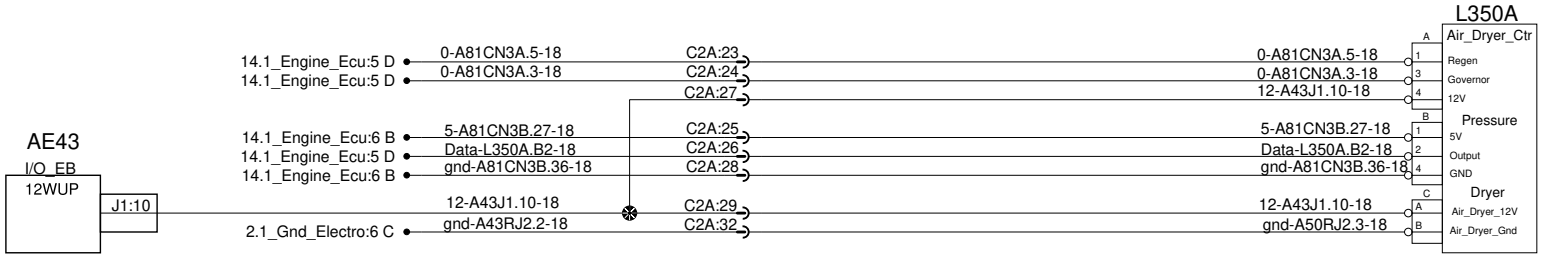

ZF Steering control

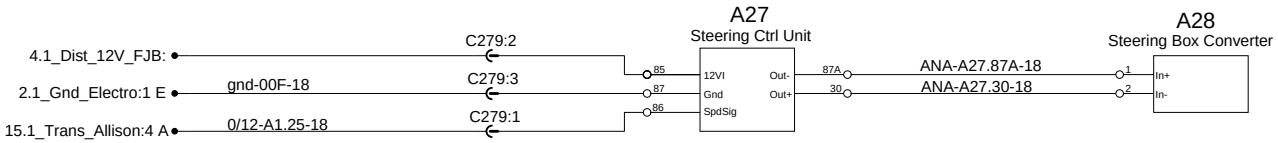

Automatic fire suppression system

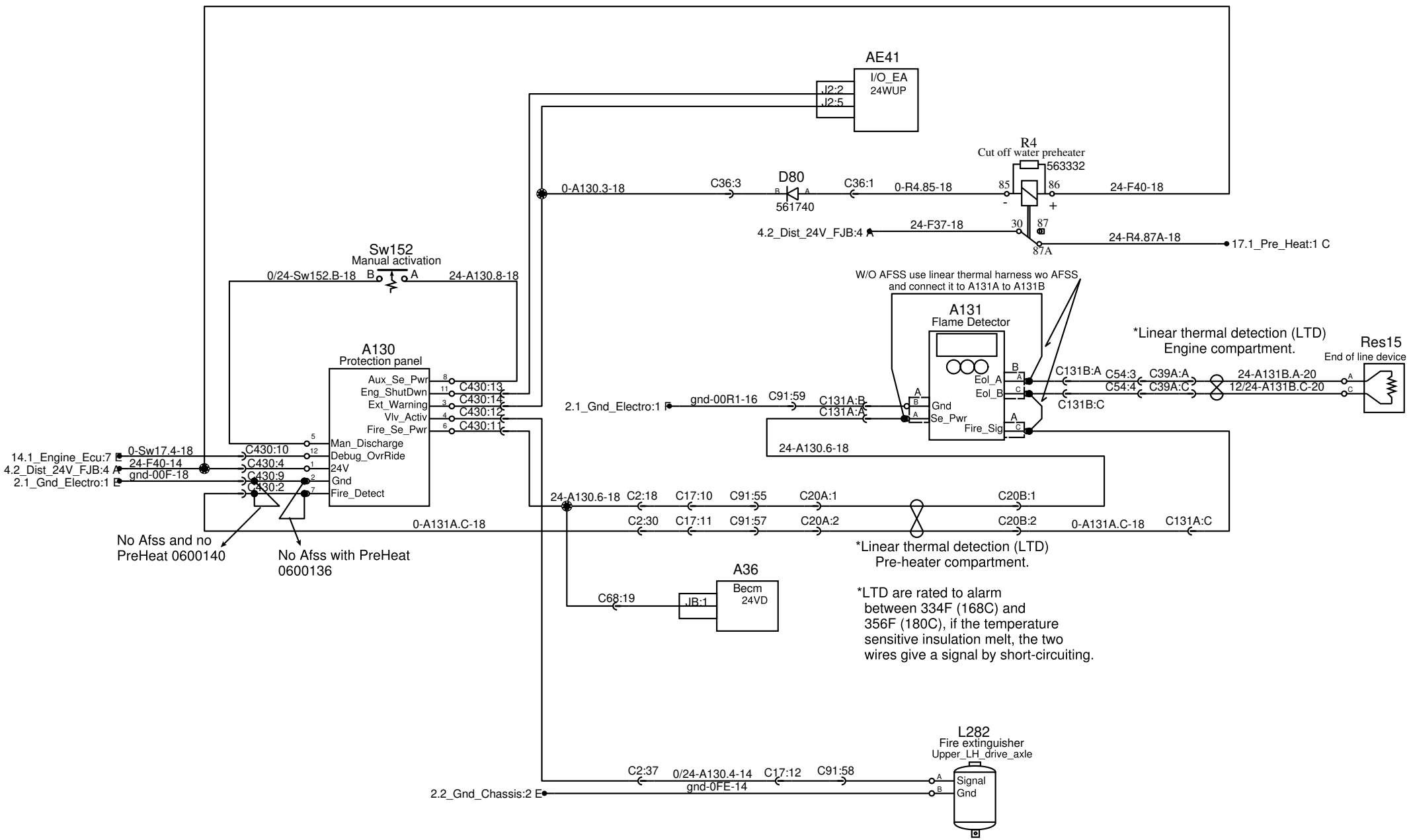

PREVOST®	WIRING DIAGRAM	No:D062140	Page:38.1	Rev:3

Automatic fire suppression system

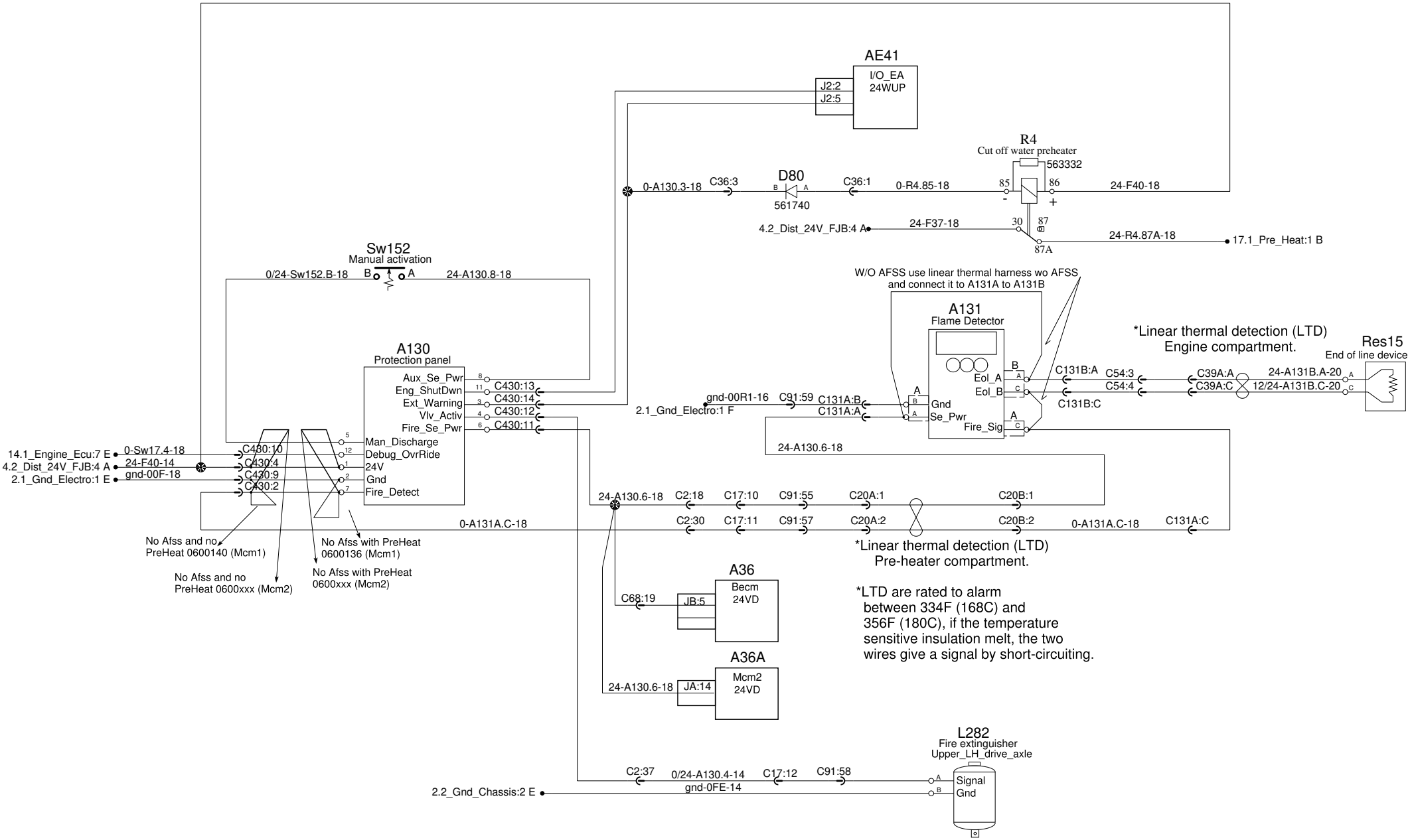

PREVOST®	WIRING DIAGRAM	No:D062140	Page:38.1	Rev:8

Automatic fire suppression system

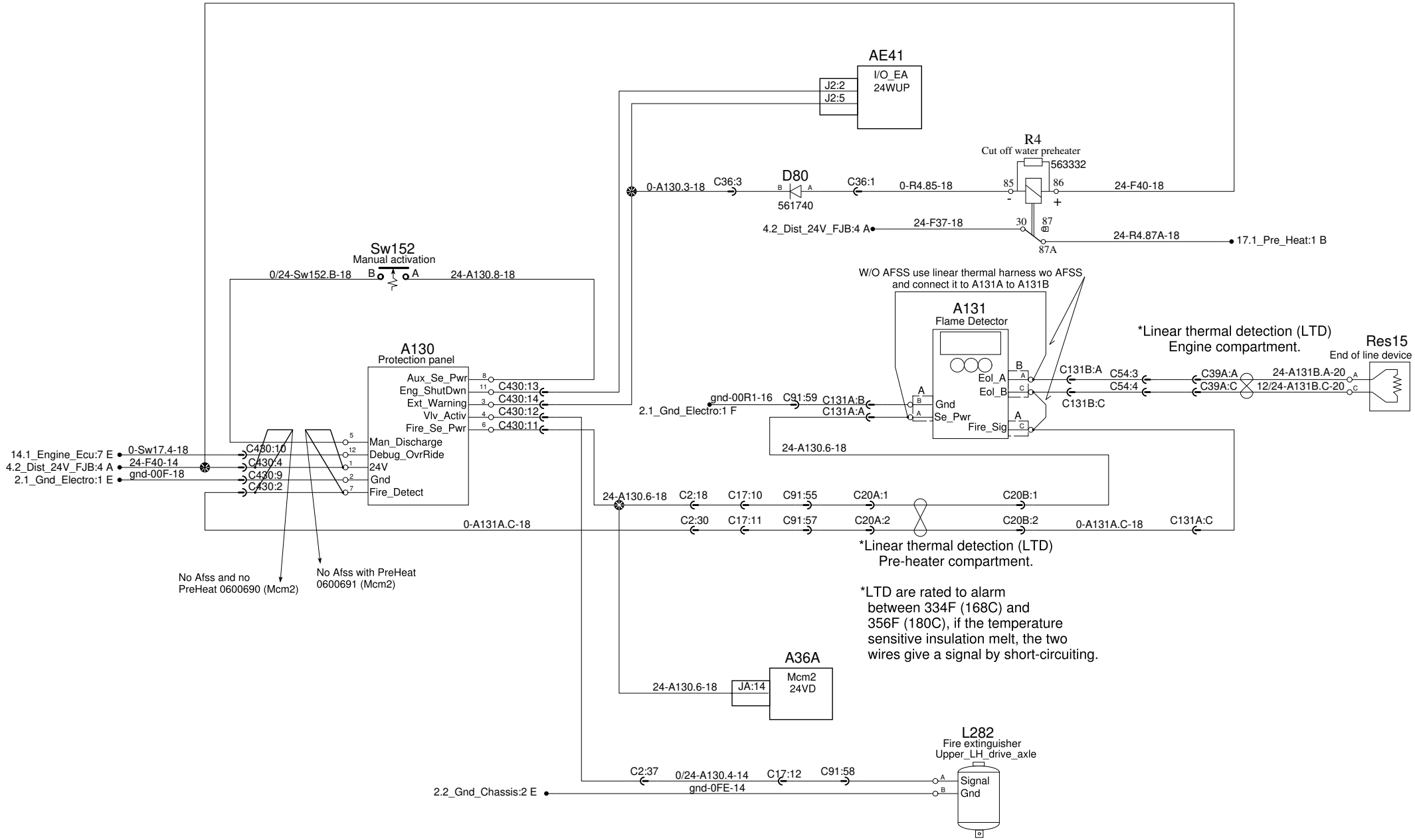

PREVOST®	WIRING DIAGRAM	No:D062140	Page:38.1	Rev:9

Tire pressure monitoring system

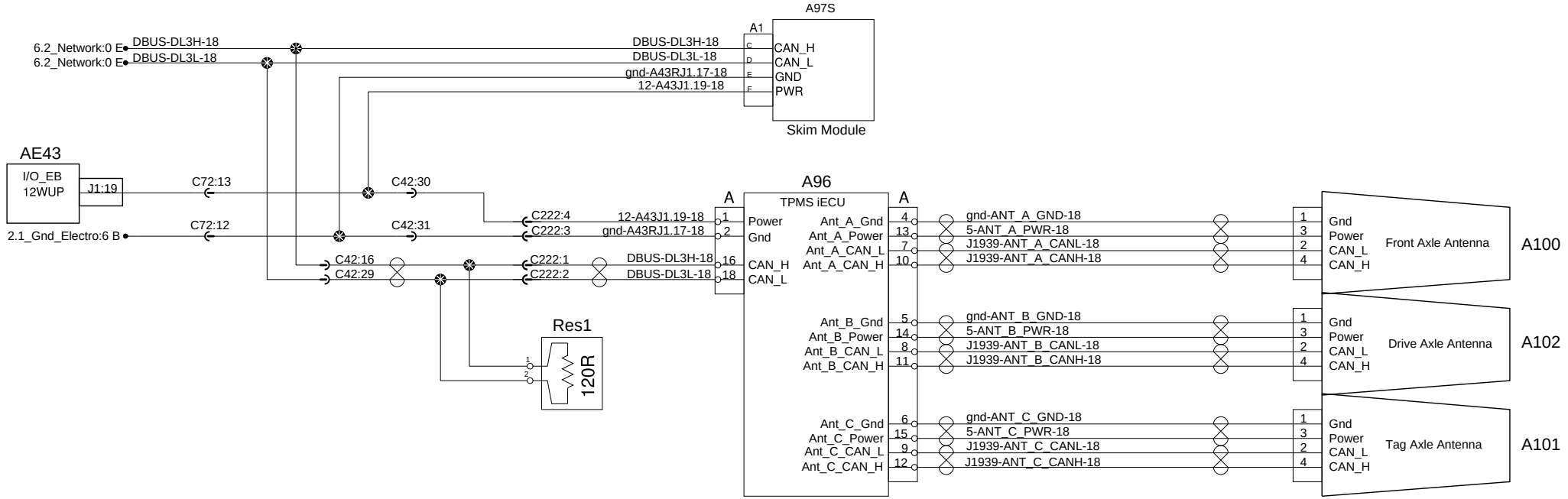

PREVOST®	WIRING DIAGRAM	No:D062140	Page:39.1	Rev:0

Tire pressure monitoring system

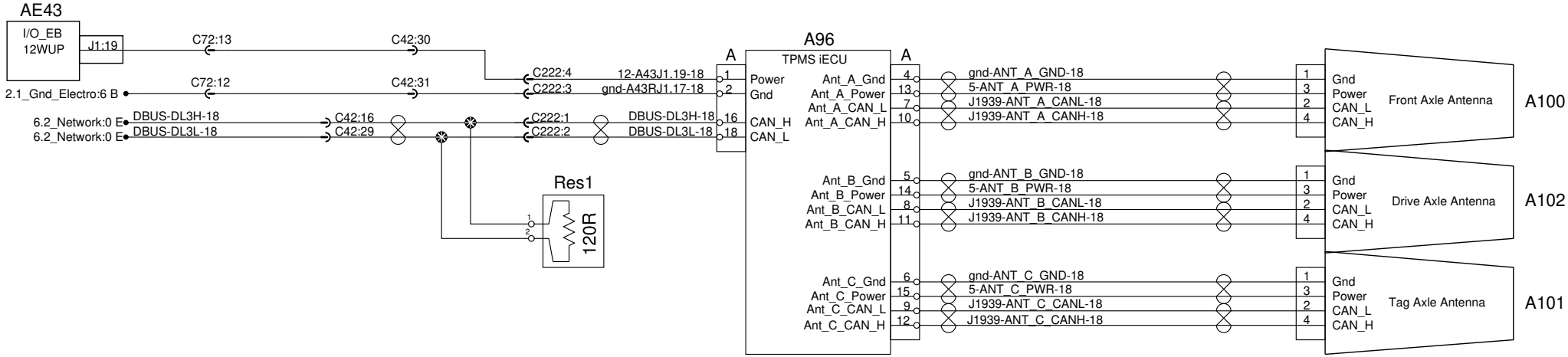

PREVOST®	WIRING DIAGRAM	No:D062140	Page:39.1	Rev:4

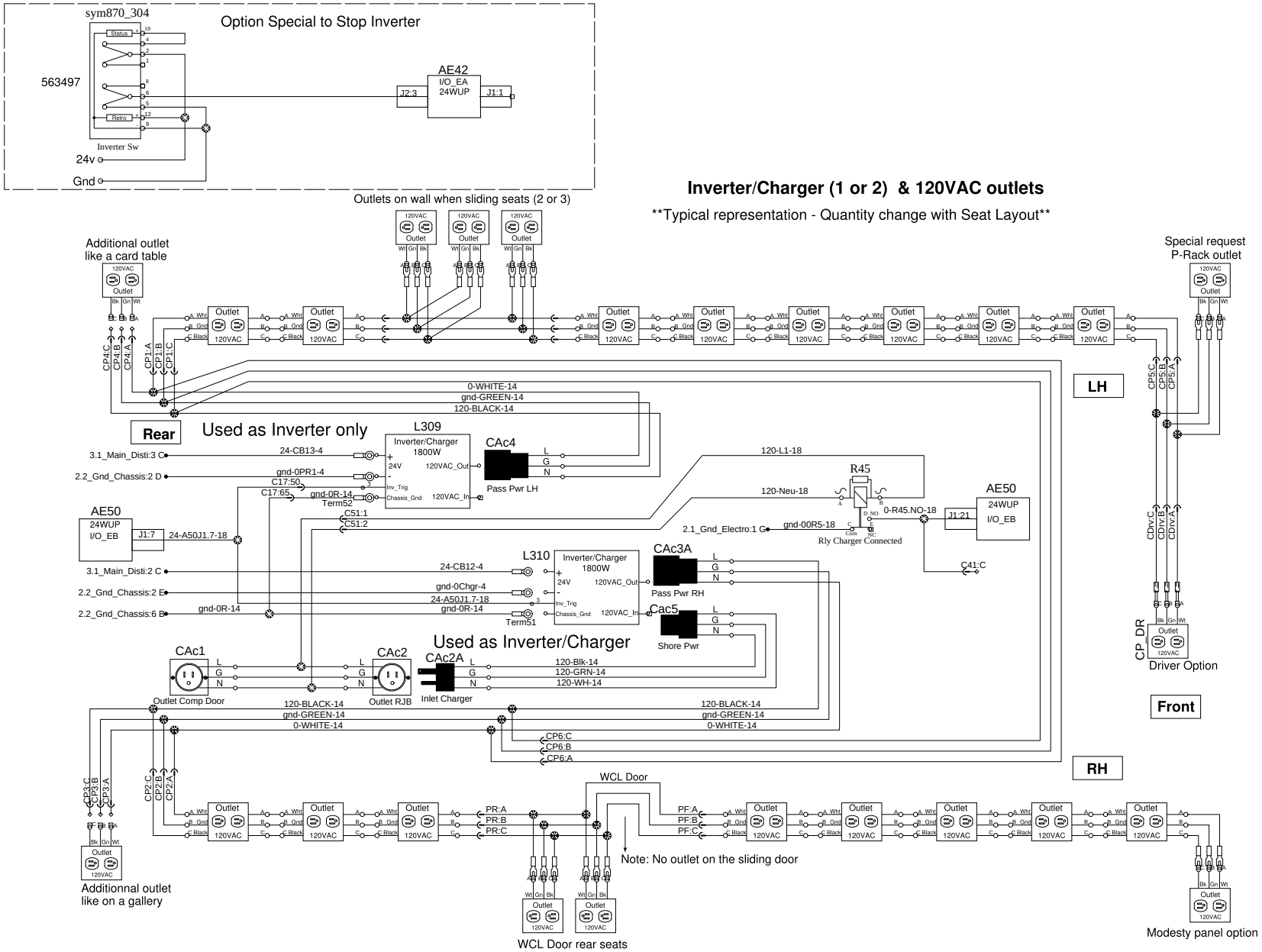

PREVOST®	WIRING DIAGRAM	No:D062140	Page:40.1	Rev:0

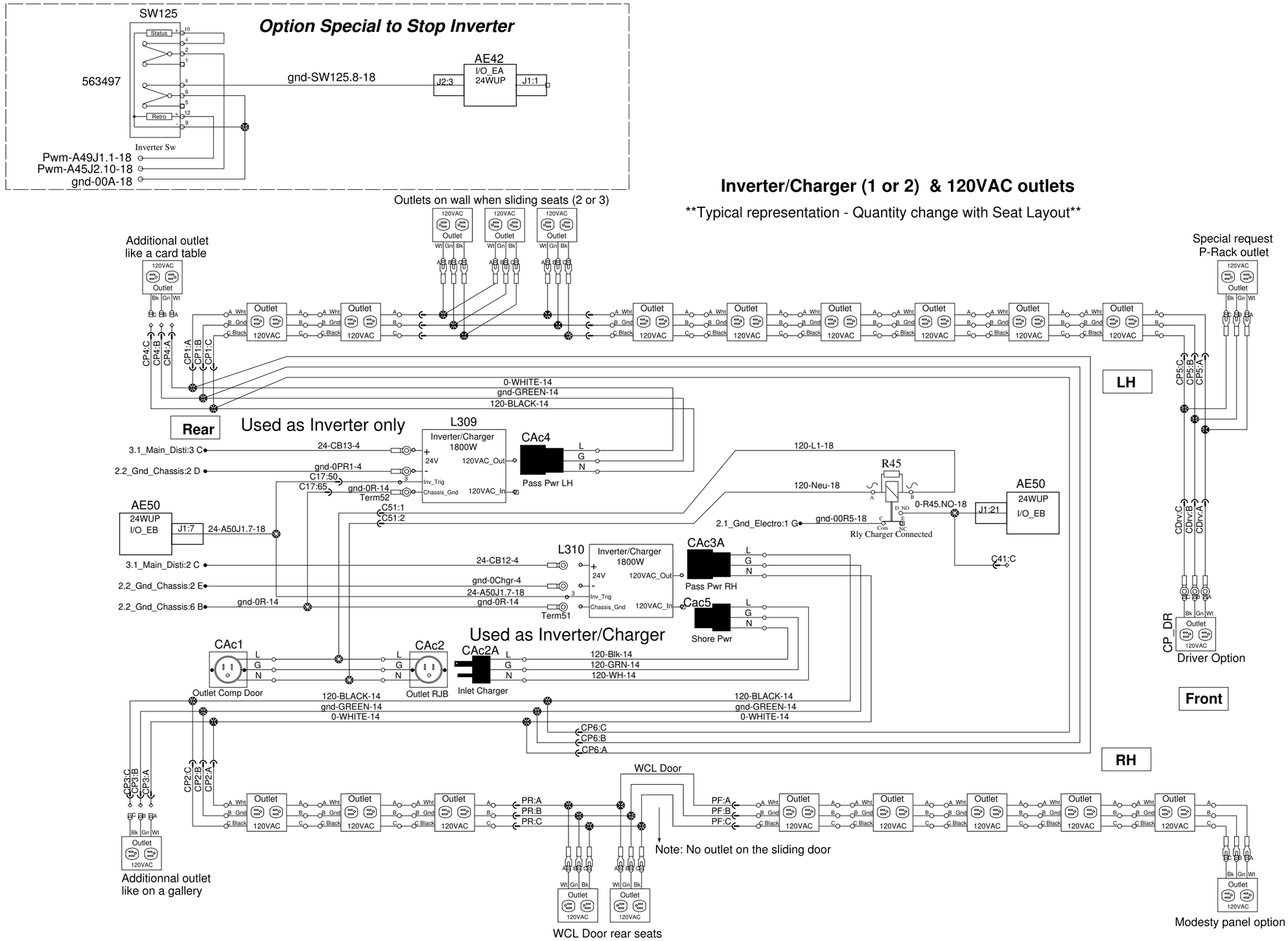

PREVOST®	WIRING DIAGRAM	No:D062140	Page:40.1 SP1	Rev:0

Inverters & 120V AC Outlets
Customer Adaptation for additionnal outlets

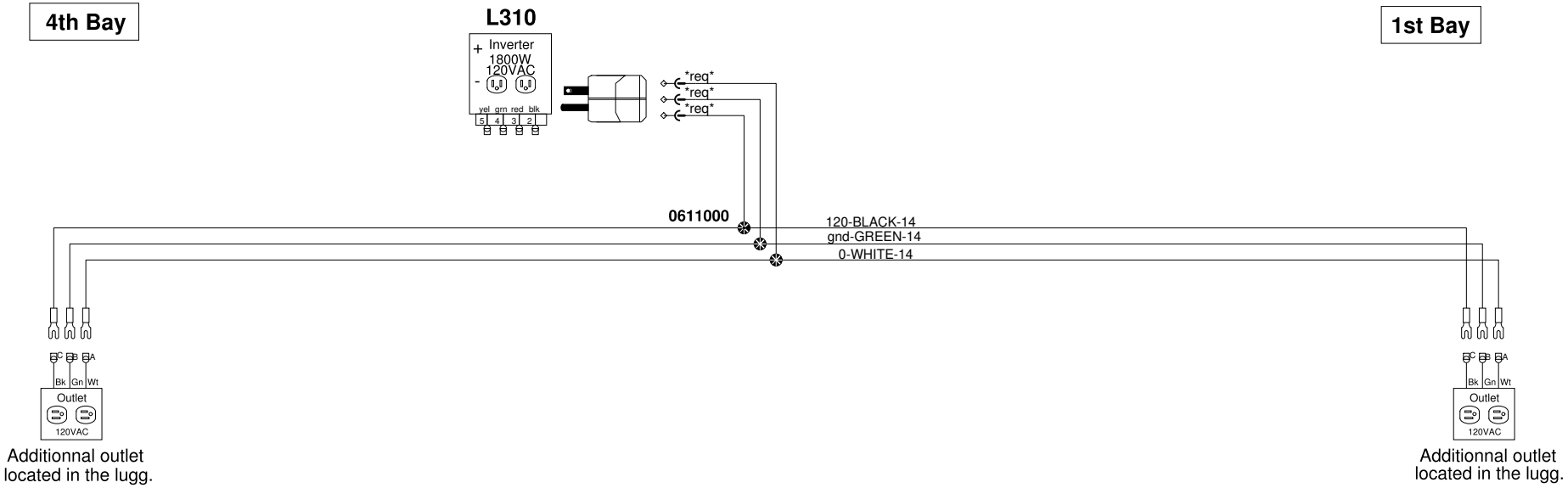

PREVOST®	WIRING DIAGRAM	No:D062140	Page:40.1 SP4	Rev:00

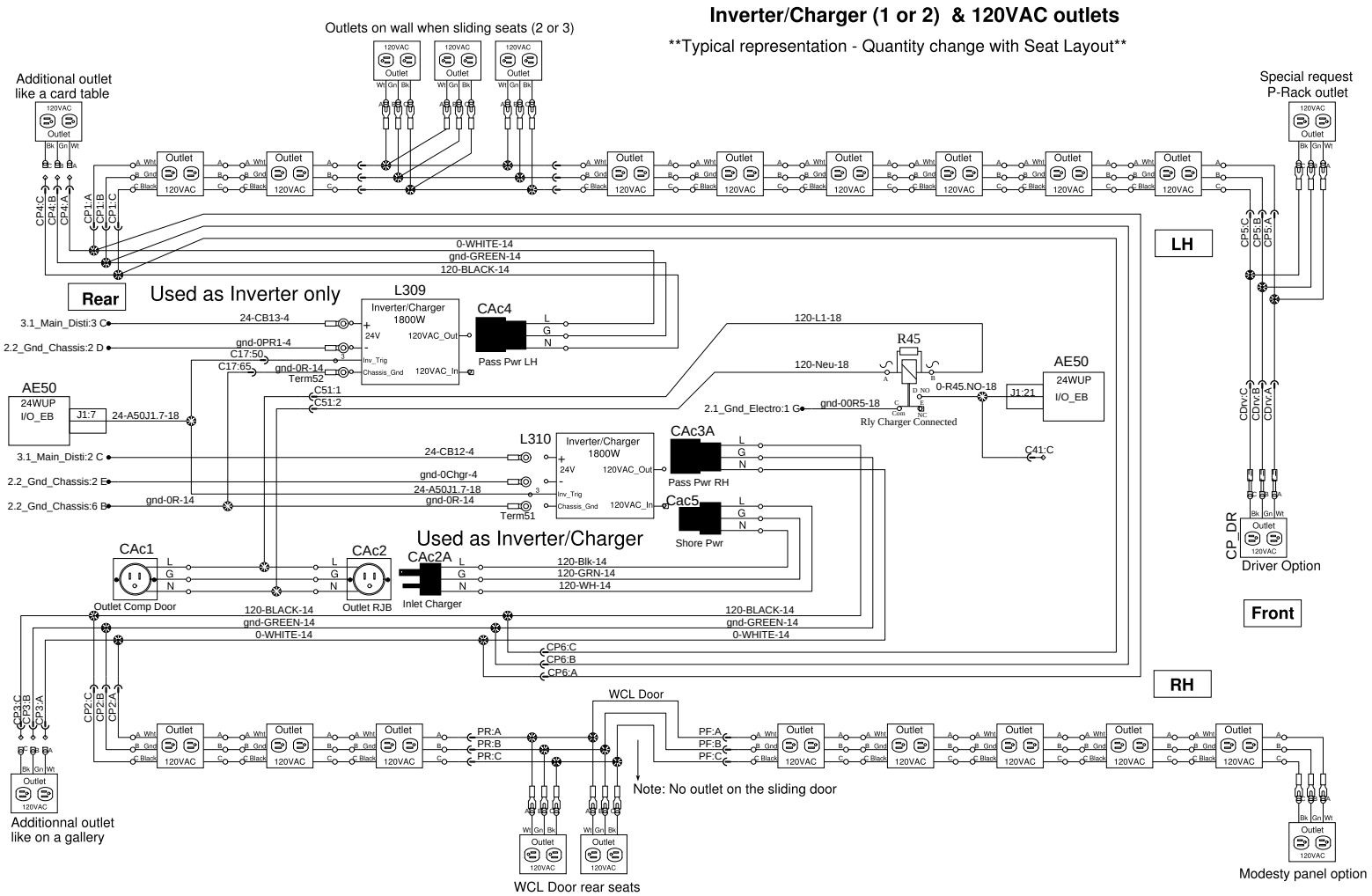

PREVOST®	WIRING DIAGRAM	No:D062140	Page:40.1	Rev:8

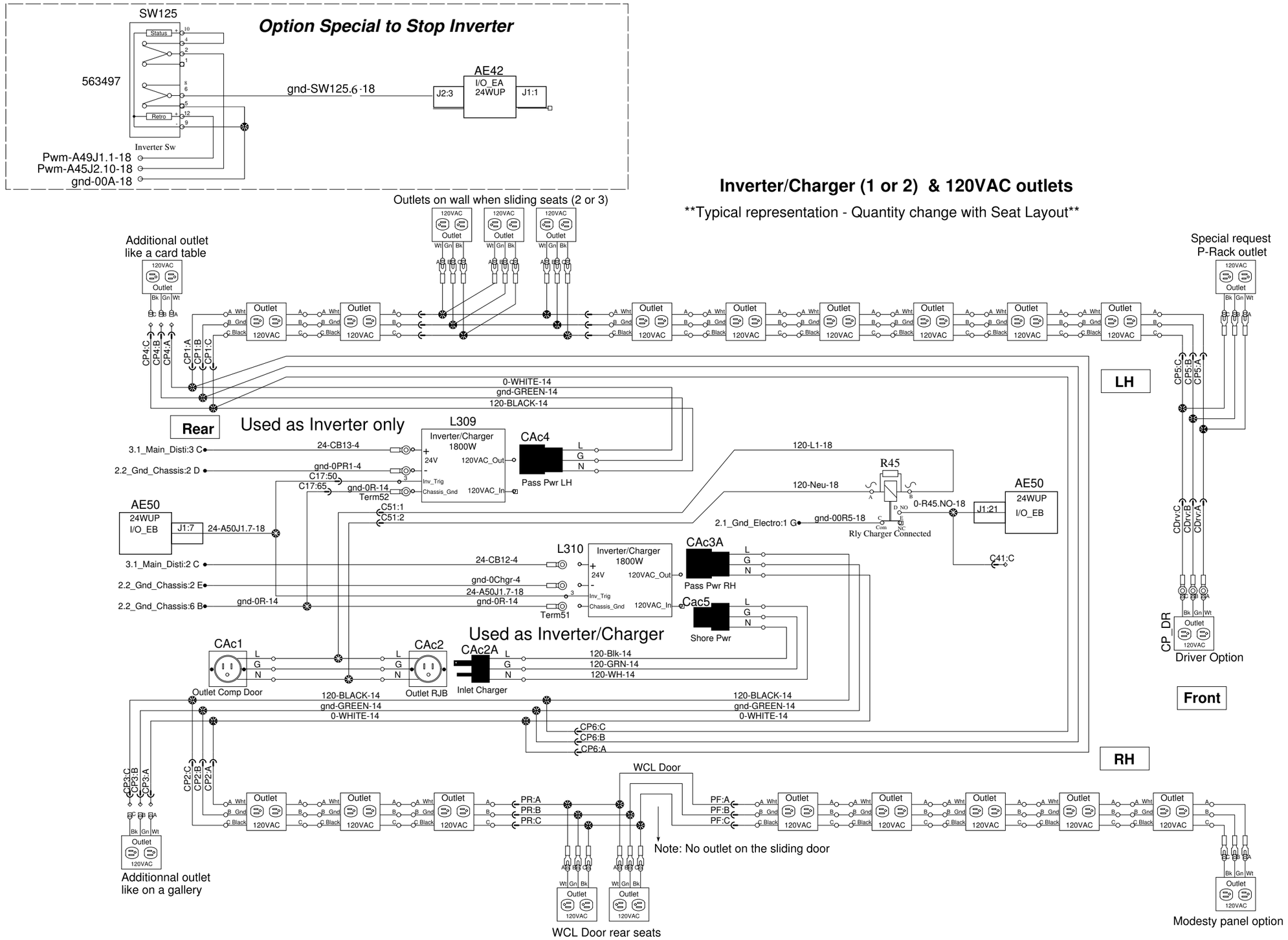

PREVOST®	WIRING DIAGRAM	No:D062140	Page:40.1 SP1	Rev:1

Inverter (1 or 2) & 120VAC outlets
Customer Adaptation additionnal parcel rack outlet

Refer to P40.1 (STD) for all details

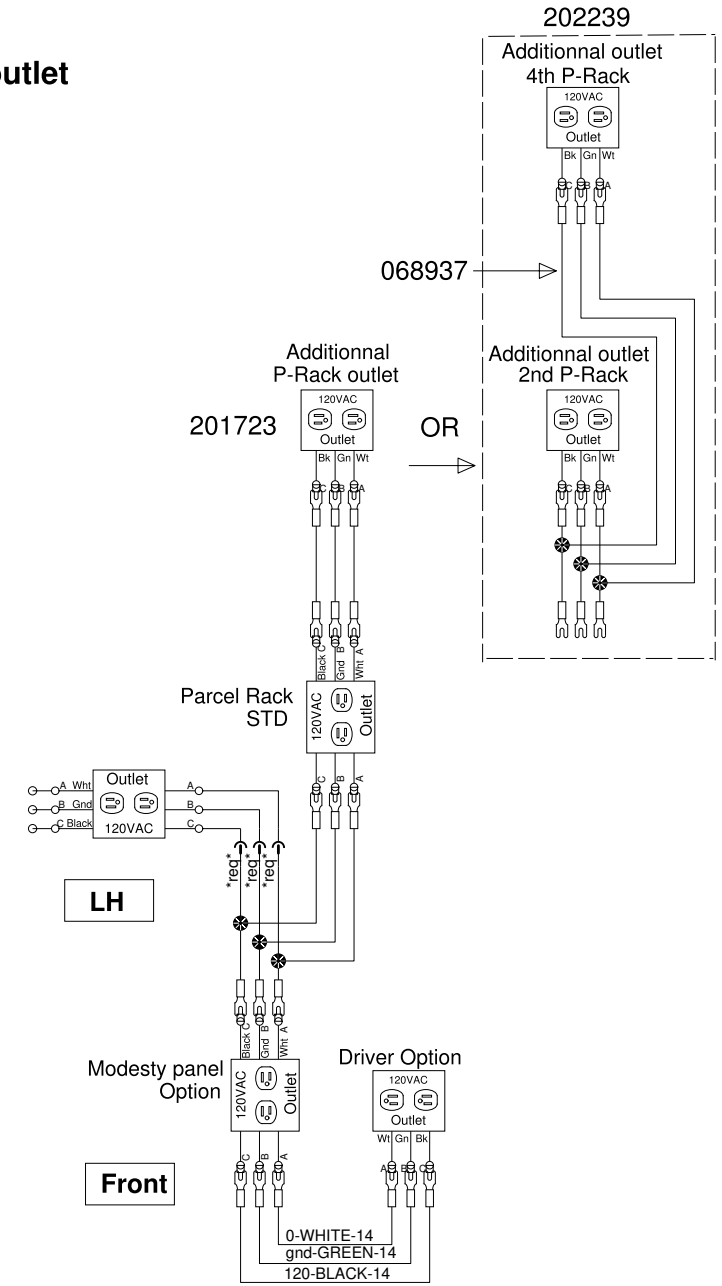

PREVOST®	WIRING DIAGRAM	No:D062140	Page:40.1 SP6	Rev:00

Inverters & 120V AC Outlets
Customer Adaptation for additionnal outlets

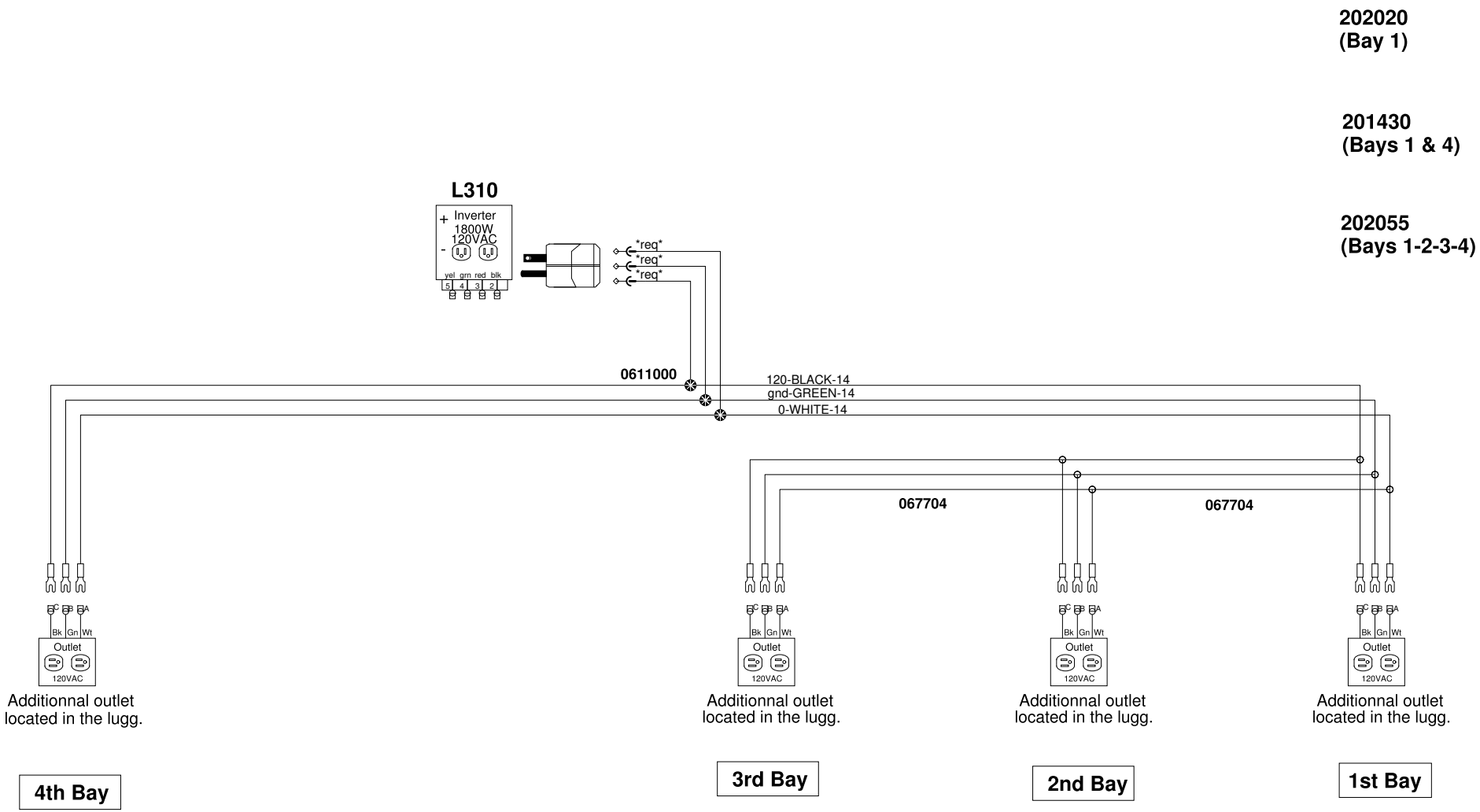

PREVOST®	WIRING DIAGRAM	No:D062140	Page:40.1 SP4	Rev:01

Sun Visors

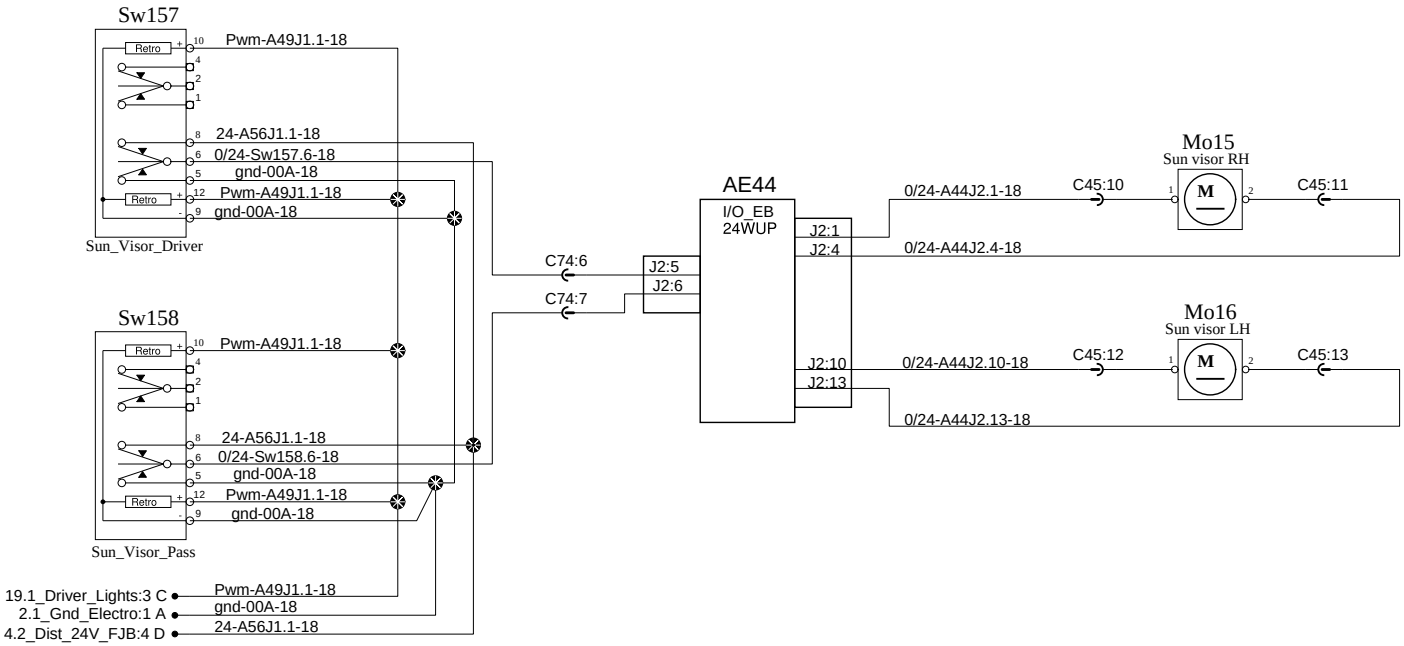

PREVOST®	WIRING DIAGRAM	No:D062140	Page:41.1	Rev:0

ELD / ITS J1939 Gateway

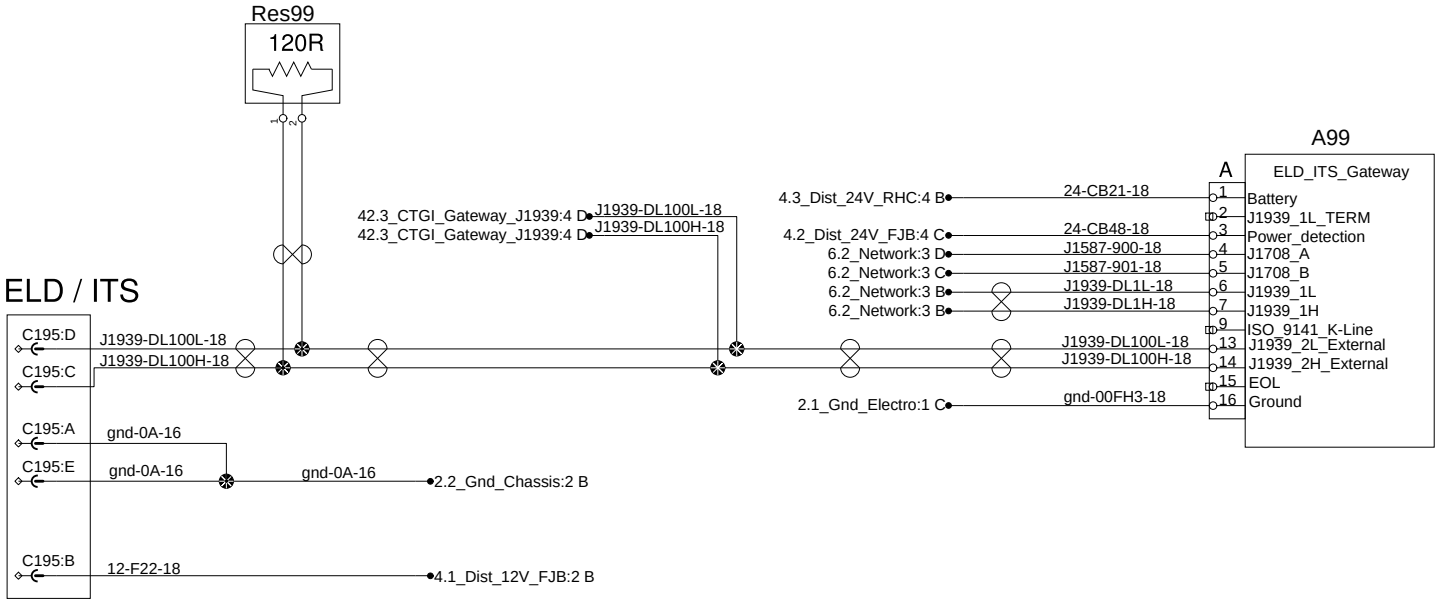

Surrounding Cameras System

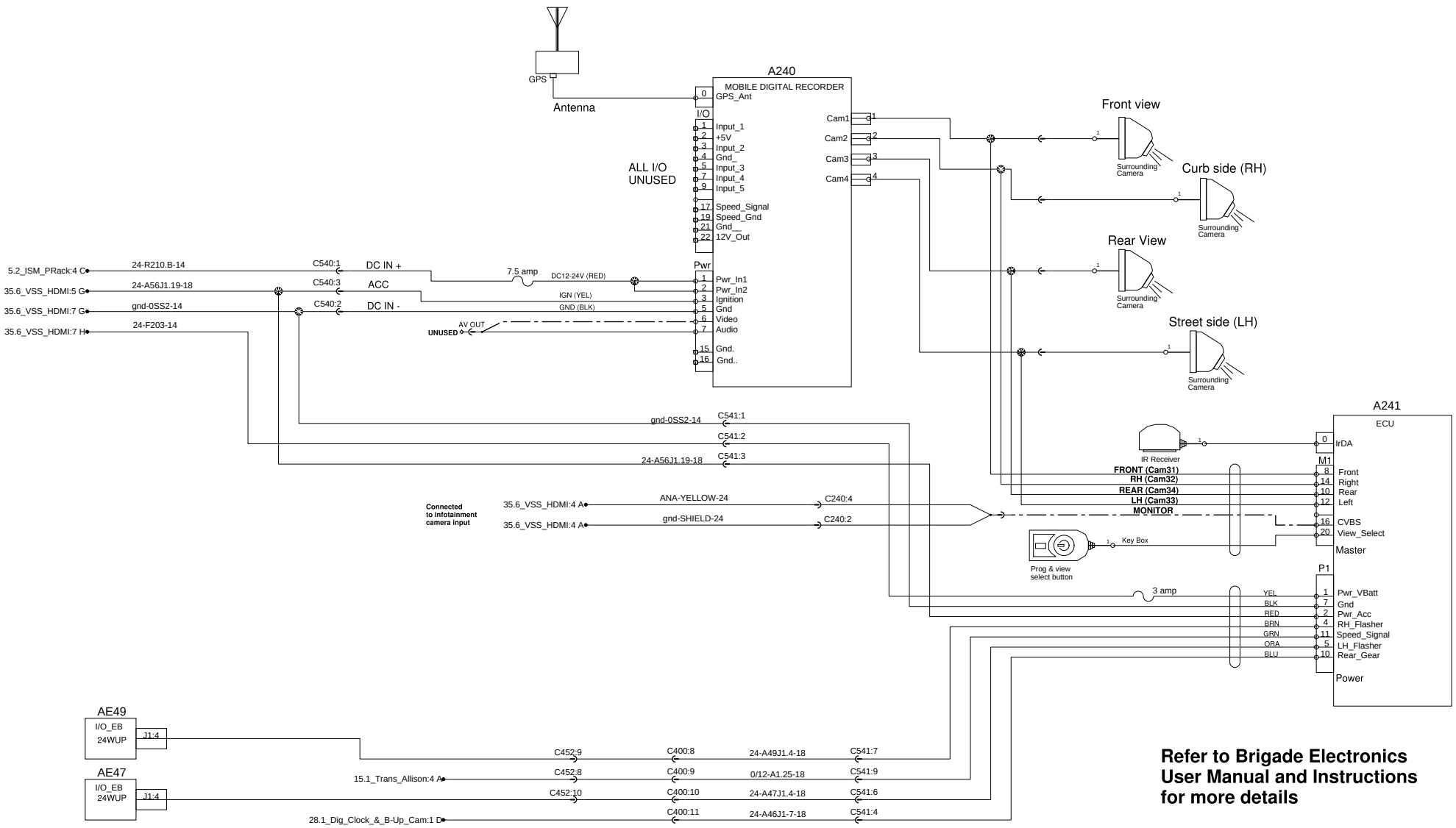

Refer to Brigade Electronics User Manual and Instructions for more details

Emergency Lights

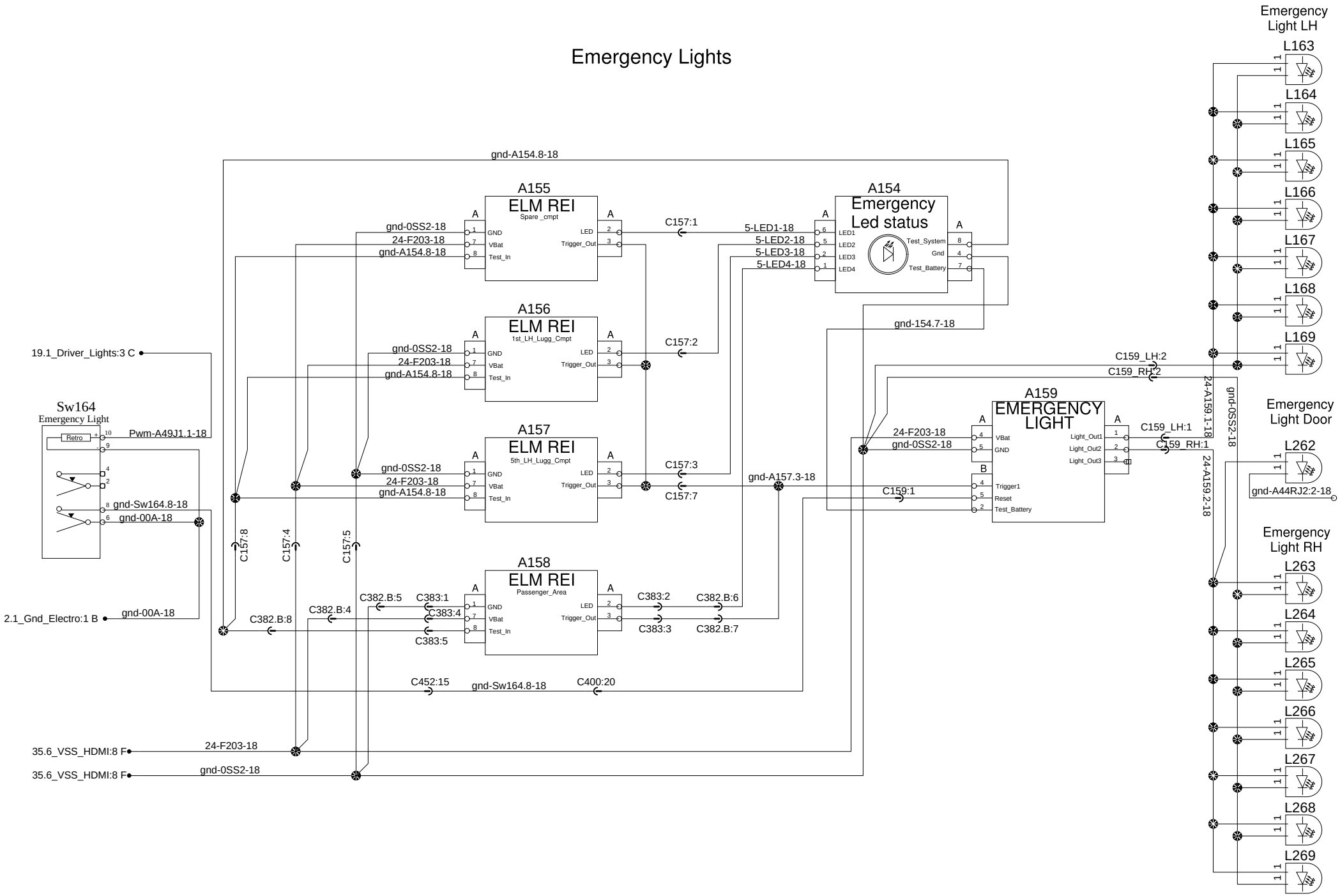

PREVOST®	WIRING DIAGRAM	No:D062140	Page:45.0	Rev:00

Customer Adaptation Dash Interface
(Central Dashboard Connector)

069920 Interconnect 'Y' are used
if there's more than one option C600A and C600B

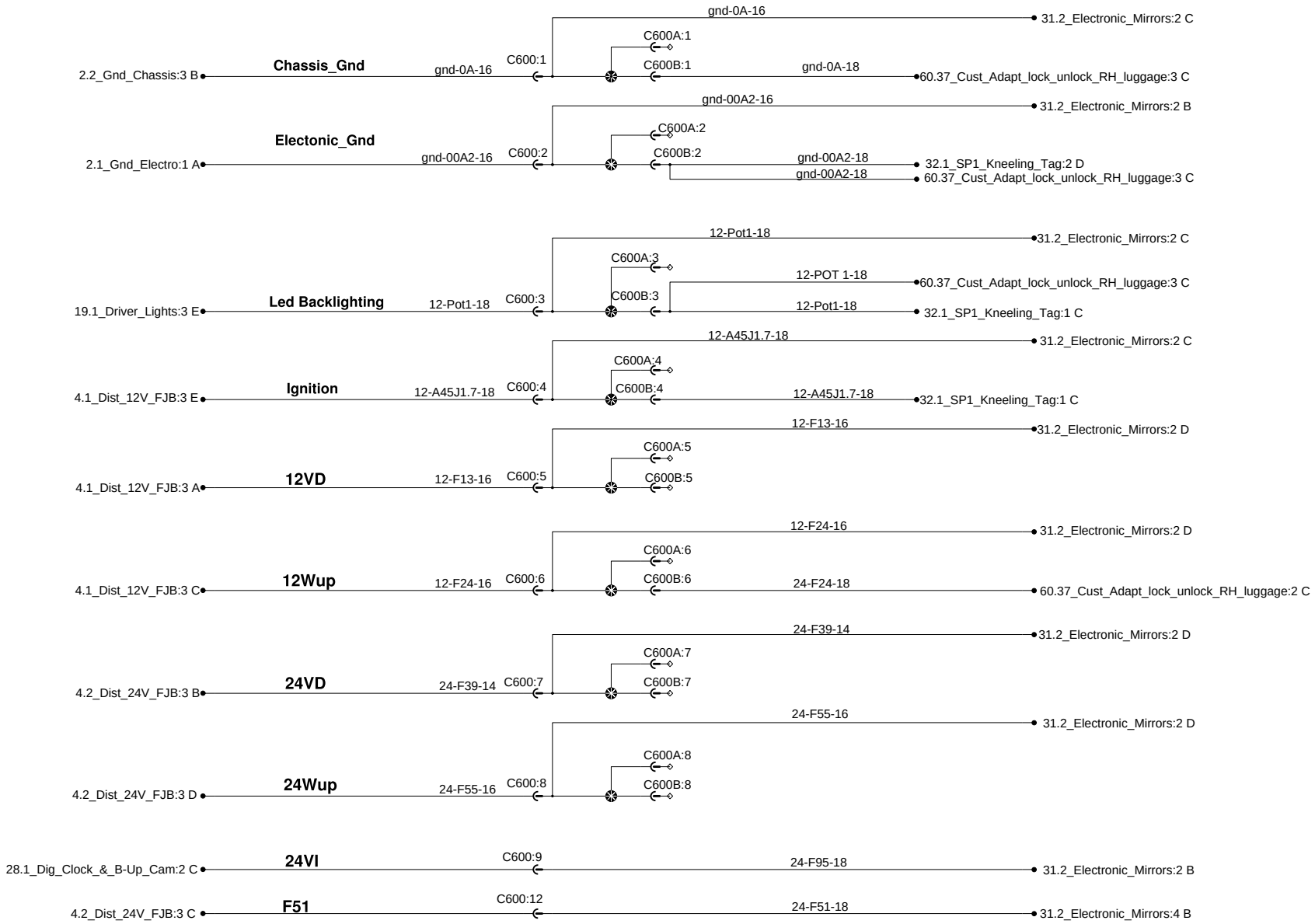

PREVOST CAR	WIRING DIAGRAM	No: D062140	Page:60.0	Rev:00

CAMERA REI WITH MONITOR

HD6-600 4 Cameras with Monitor

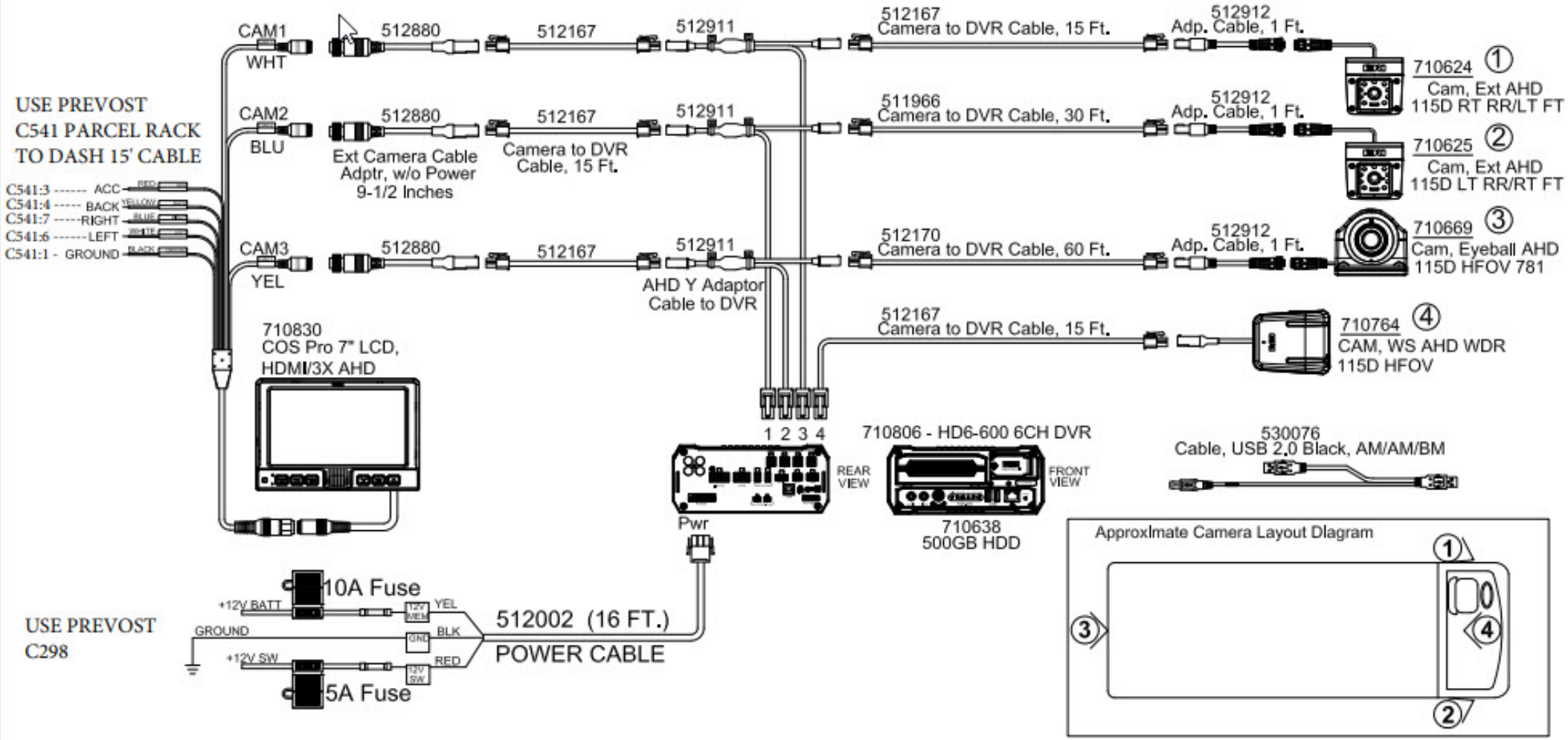

PREVOST®	WIRING DIAGRAM	No: D062140	Page:60.10	Rev:0

Customer Adaptation Dash Interface
(Central Dashboard Connector)

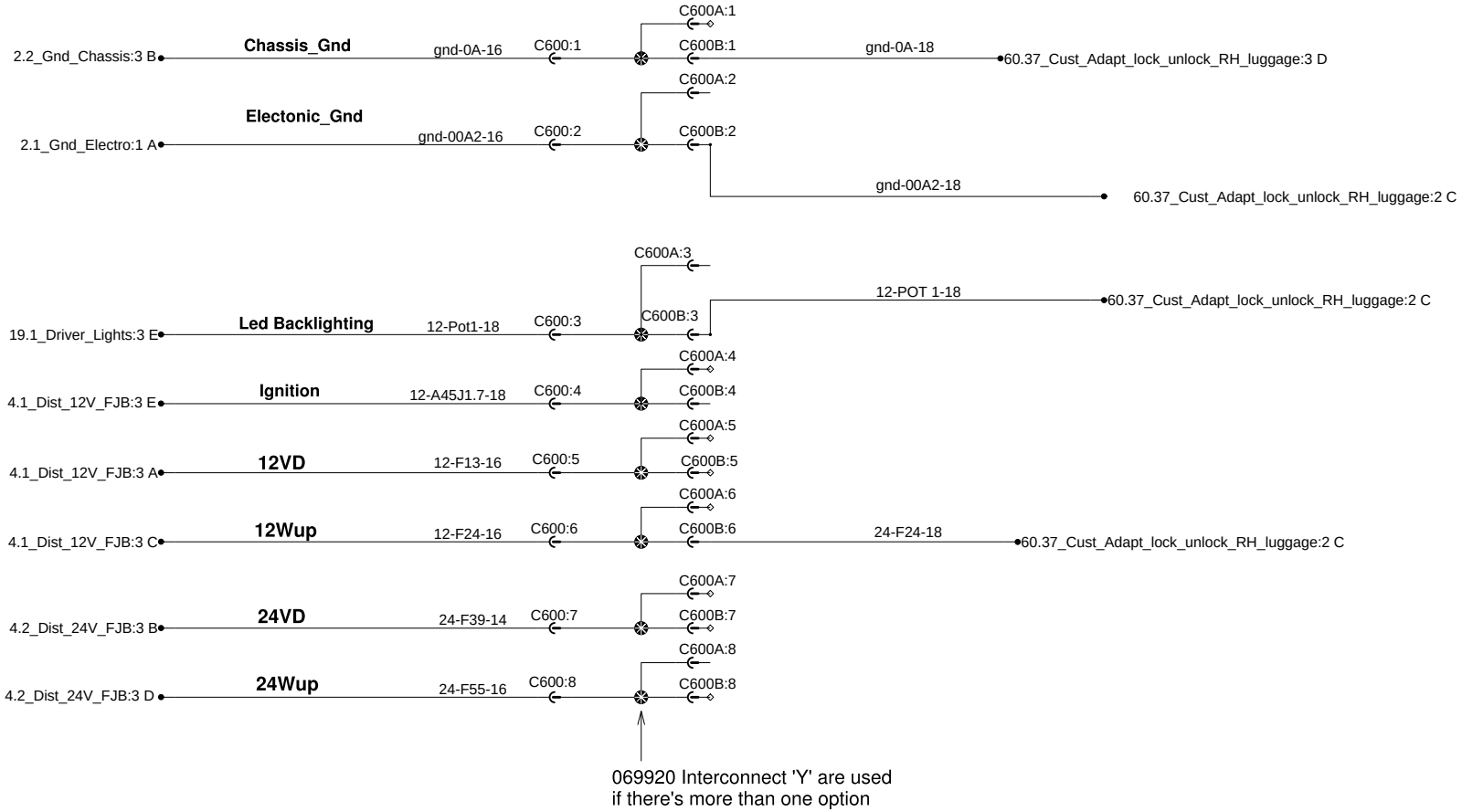

Media Player MP-5000 With GPS

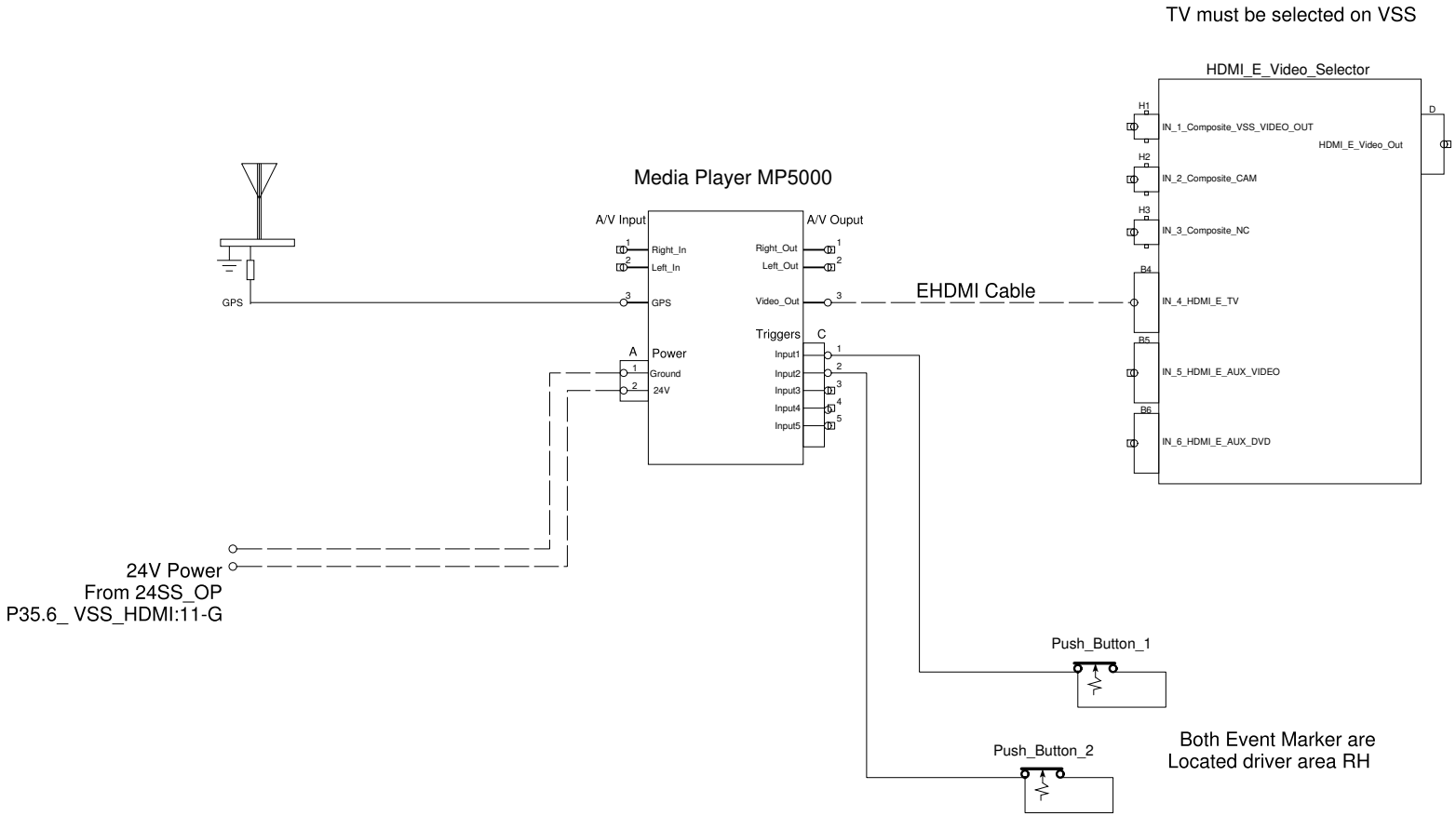

PREVOST®	WIRING DIAGRAM	No: D062140	Page:60.11	Rev:1

Snow Chains
Customer Adaptation

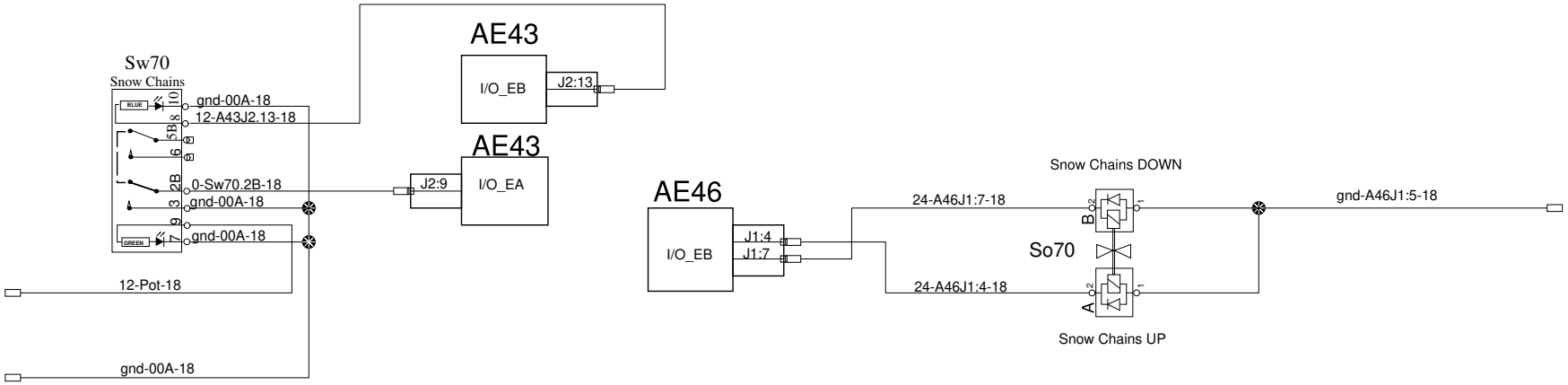

PREVOST®	WIRING DIAGRAM	No:D062140	Page:60.12	Rev:01

Water PreHeater System

Customer Adaptation Add Momentary Sw to ctrl Proheat unit

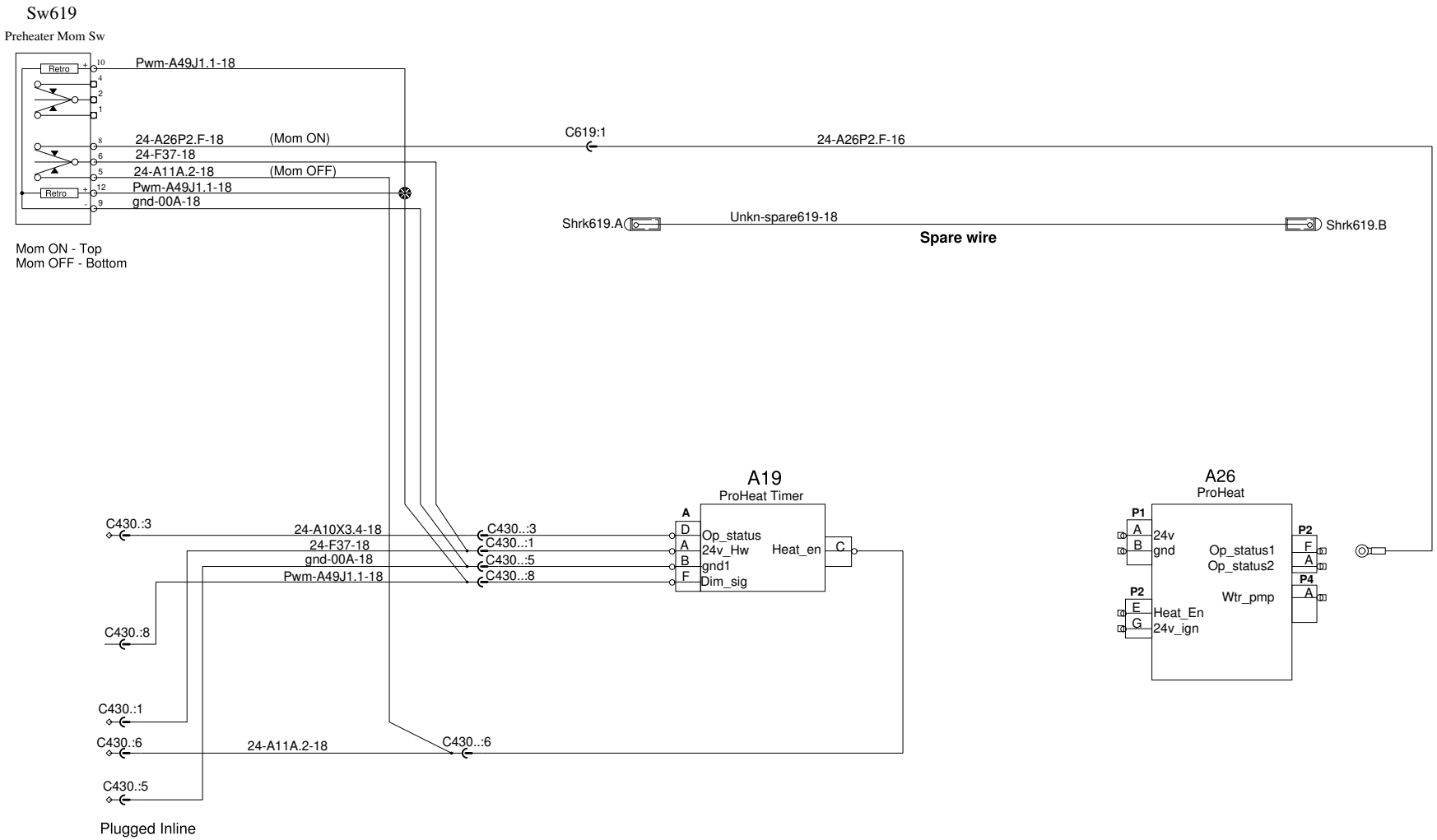

PREVOST®	WIRING DIAGRAM	No:D062140	Page:60.15	Rev:0

12V Internet Sw. on dashboard

CUSTOMER ADAPTATION

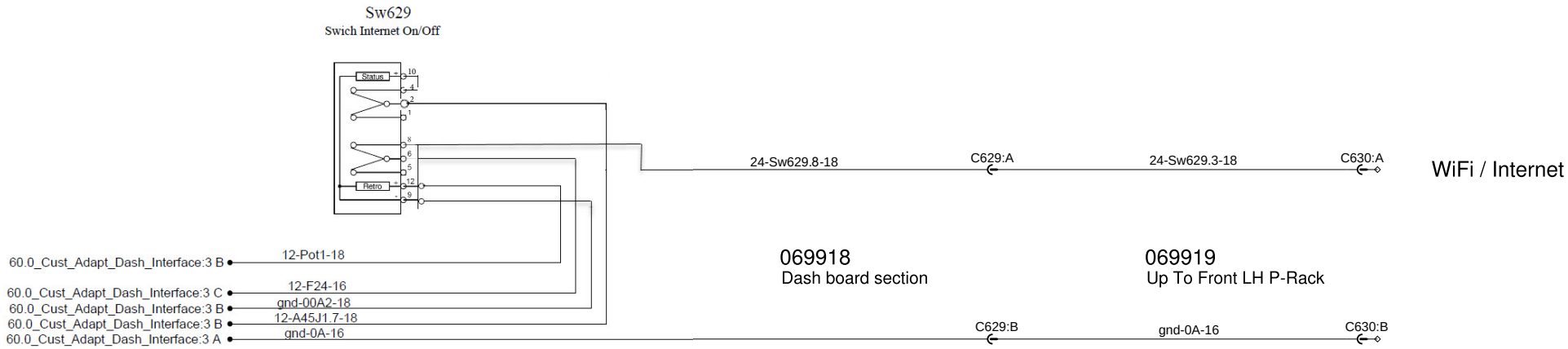

PREVOST®	WIRING DIAGRAM	No: D062140	Page:60.22	Rev:01

Mobile Digital Video Recorders (DVR)

Customer Adaptation

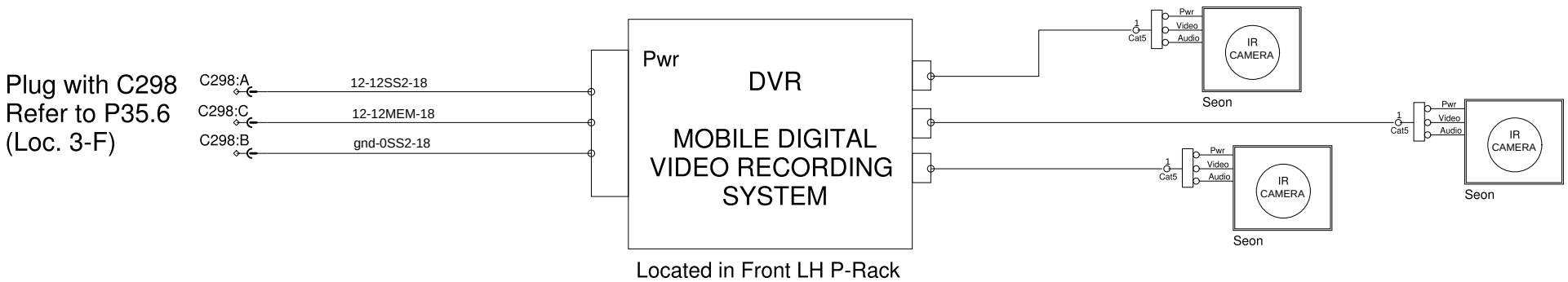

PREVOST®	WIRING DIAGRAM	No:D062140	Page:60.24	Rev:00

Mobile Digital Video Recorders (DVR)

Customer Adaptation

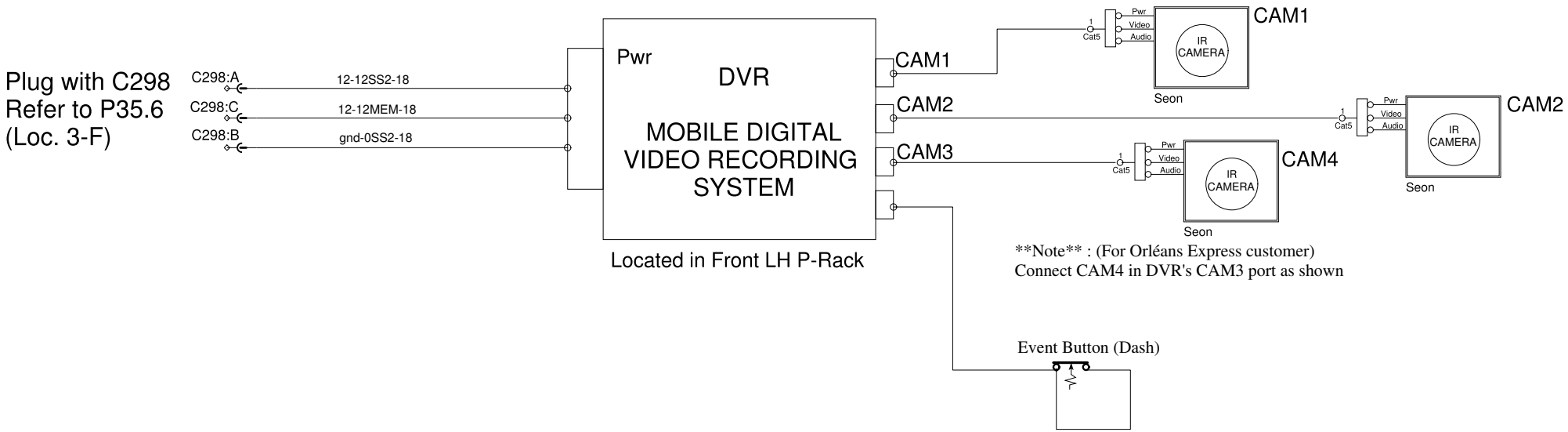

Note : (For Orléans Express customer)
Connect CAM4 in DVR's CAM3 port as shown

PREVOST®	WIRING DIAGRAM	No:D062140	Page:60.24 SP1	Rev:01

Lavatory Smoke Detector
Customer Adaptation

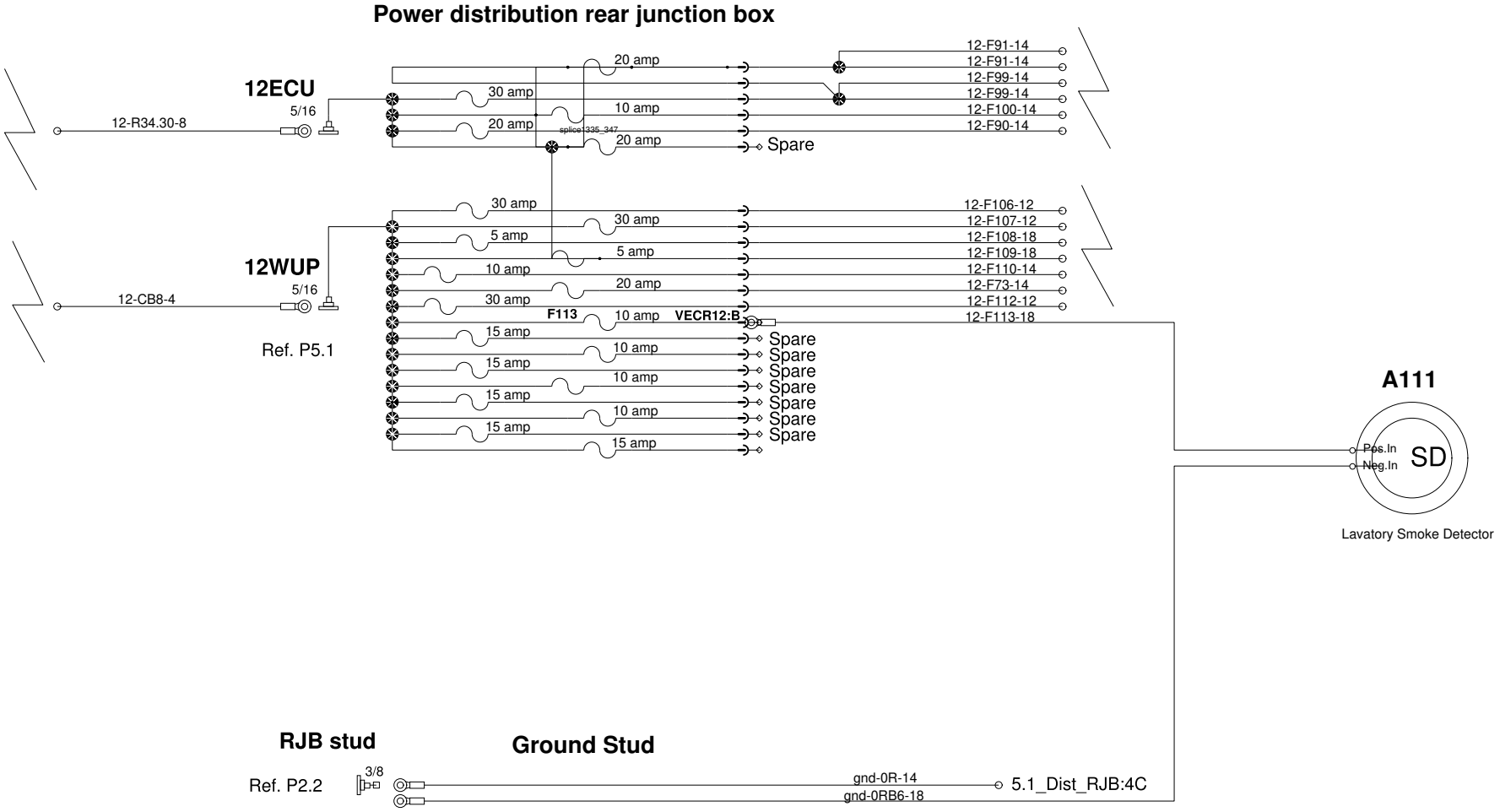

PREVOST®	WIRING DIAGRAM	No:D062140	Page:60.25	Rev:01

Customer Adapation - Rear Galley

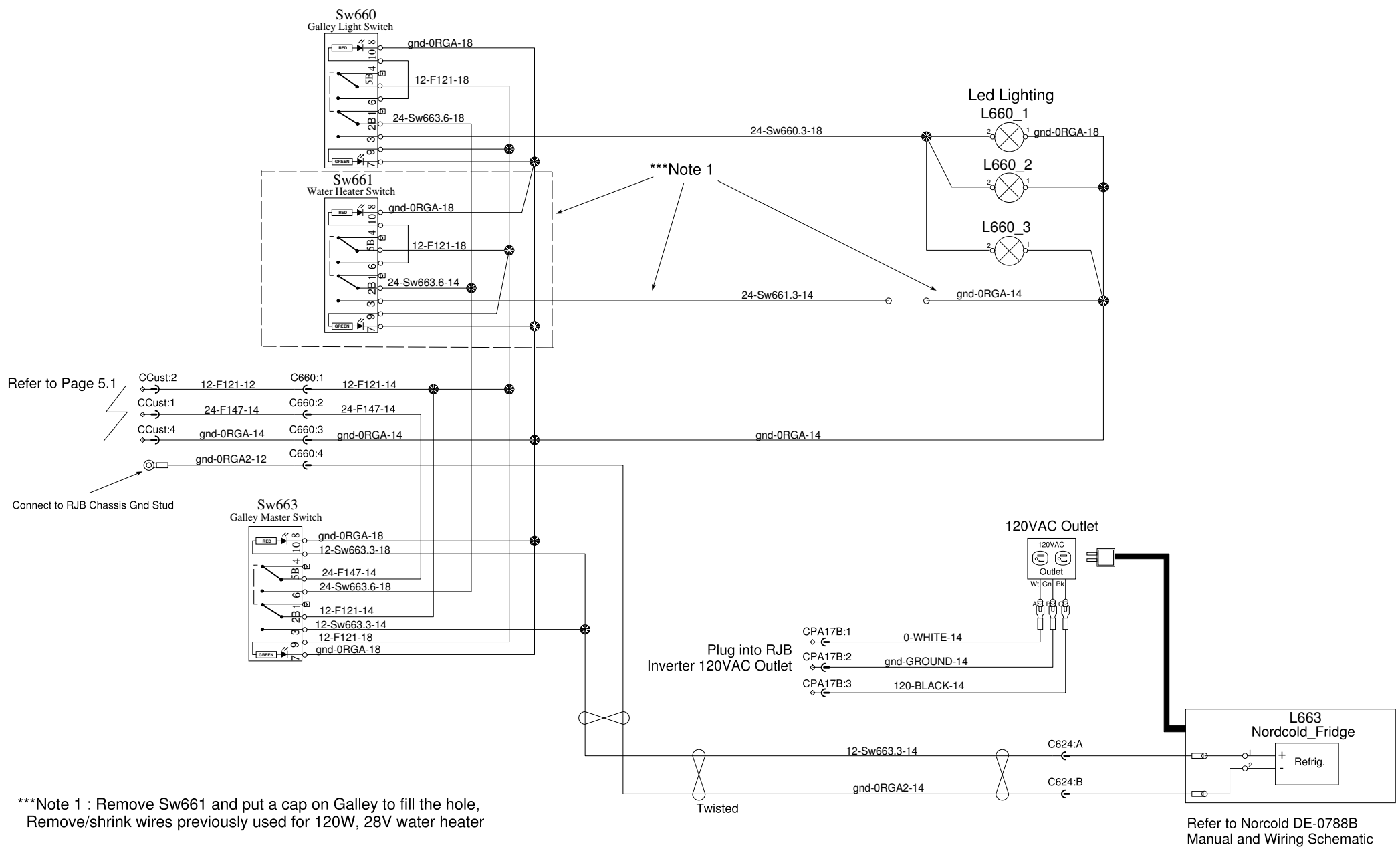

***Note 1 : Remove Sw661 and put a cap on Galley to fill the hole,
Remove/shrink wires previously used for 120W, 28V water heater

PREVOST®	WIRING DIAGRAM	No:D062140	Page:60.30 SP1	Rev:00

Customer adaptation Signals and power for camera system

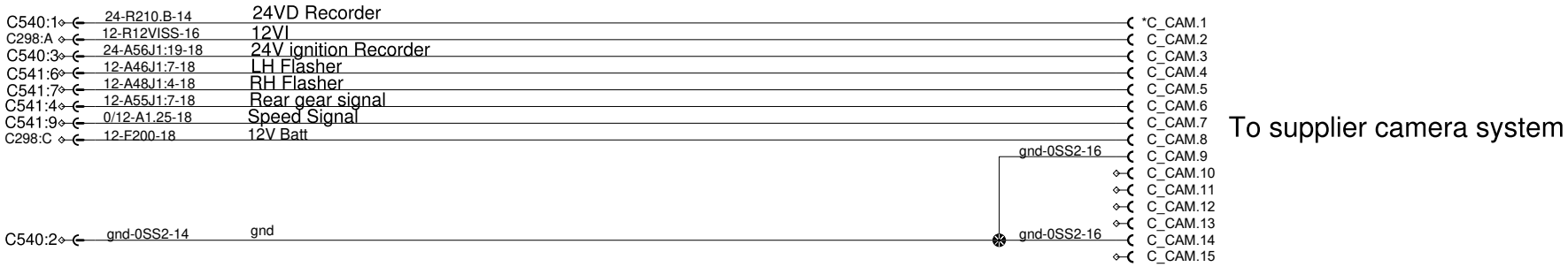

To connect the following connector, refer to pages below:
- Connector C540 - page 44.0 2 C
- Connector C541 - page 44.0 5 E
- Connector C298 - page 35.6 4 F

Customer Adaptation
TV Satellite Option

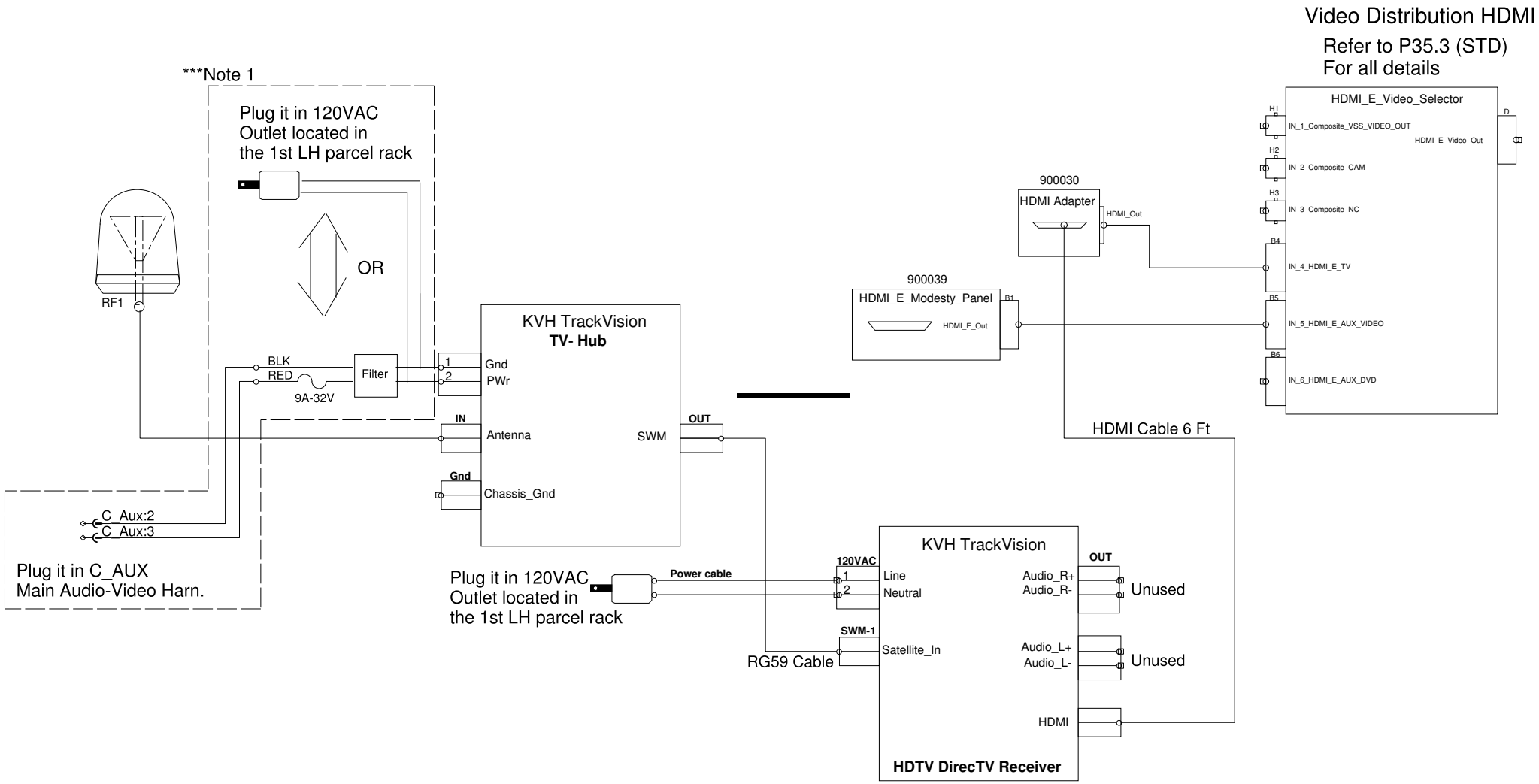

***Note 1 : Use either 120VAC adapter or fuse + filter, whichever is provided

PREVOST®	WIRING DIAGRAM	No:D062140	Page:60.35 SP1	Rev:00

Customer adaptation additional radio & HDMI input in 2nd P-Rack

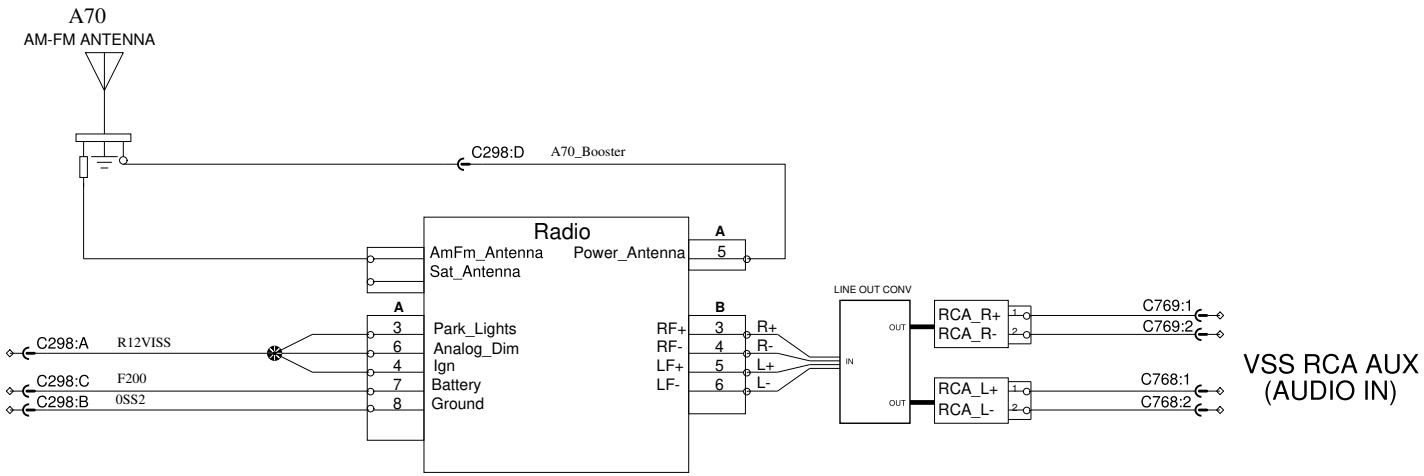

REFER TO PAGE 35.3 STD FOR ALL DETAILS

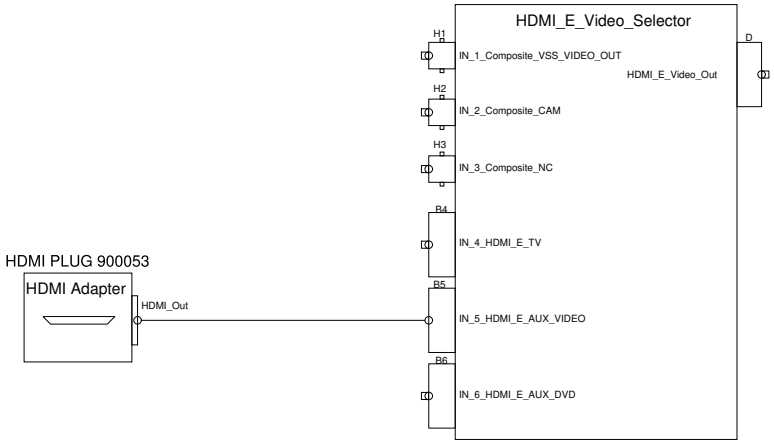

PREVOST®	WIRING DIAGRAM	No:D062140	Page:60.36 SP1	Rev:00

CTGI - Customer Telematic Gateway Interface
Saucon Prox , Optional Camera and WiFi

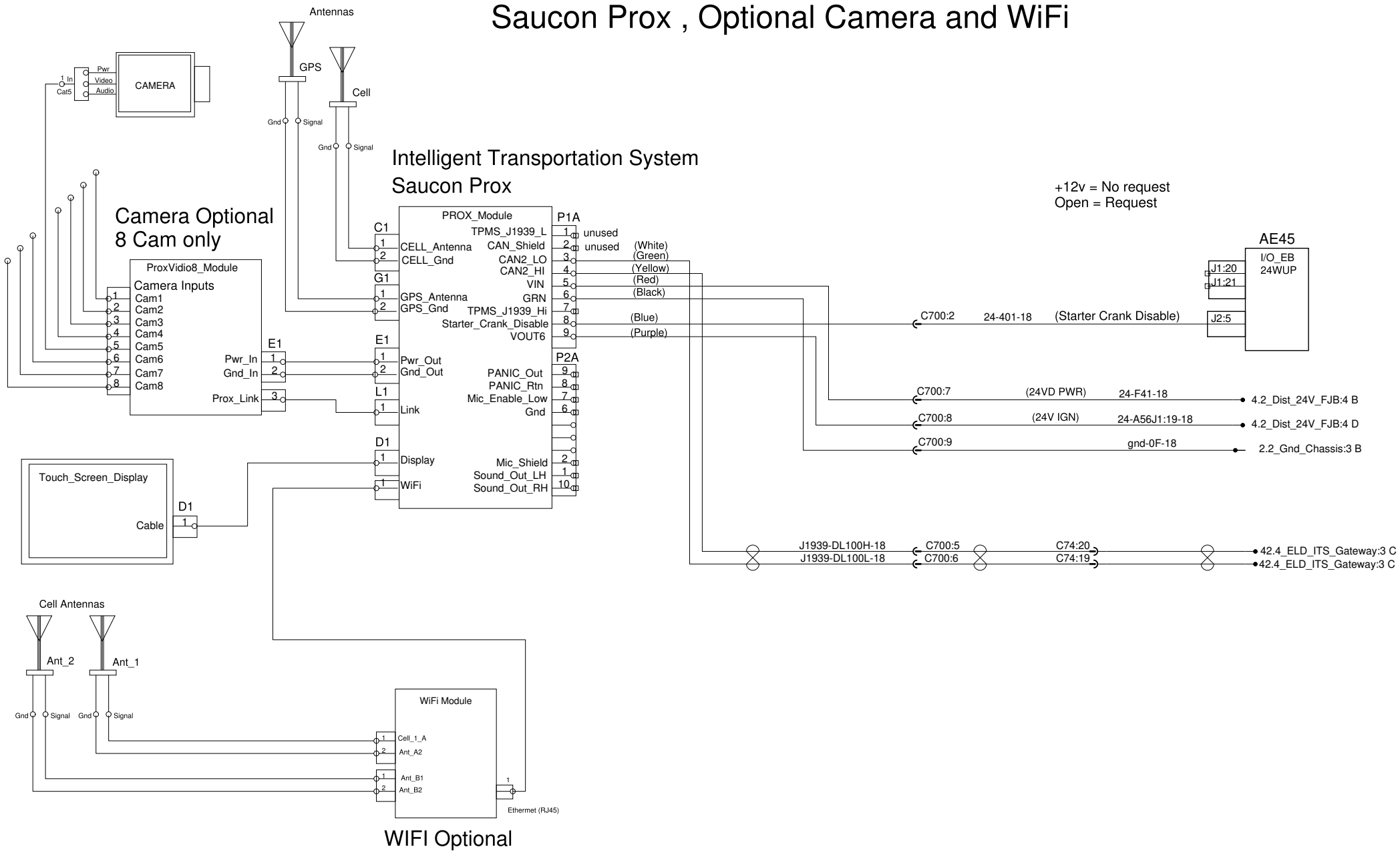

PREVOST®	WIRING DIAGRAM	No:D062140	Page:60.4	Rev:00

WATER IN FUEL DETECTION

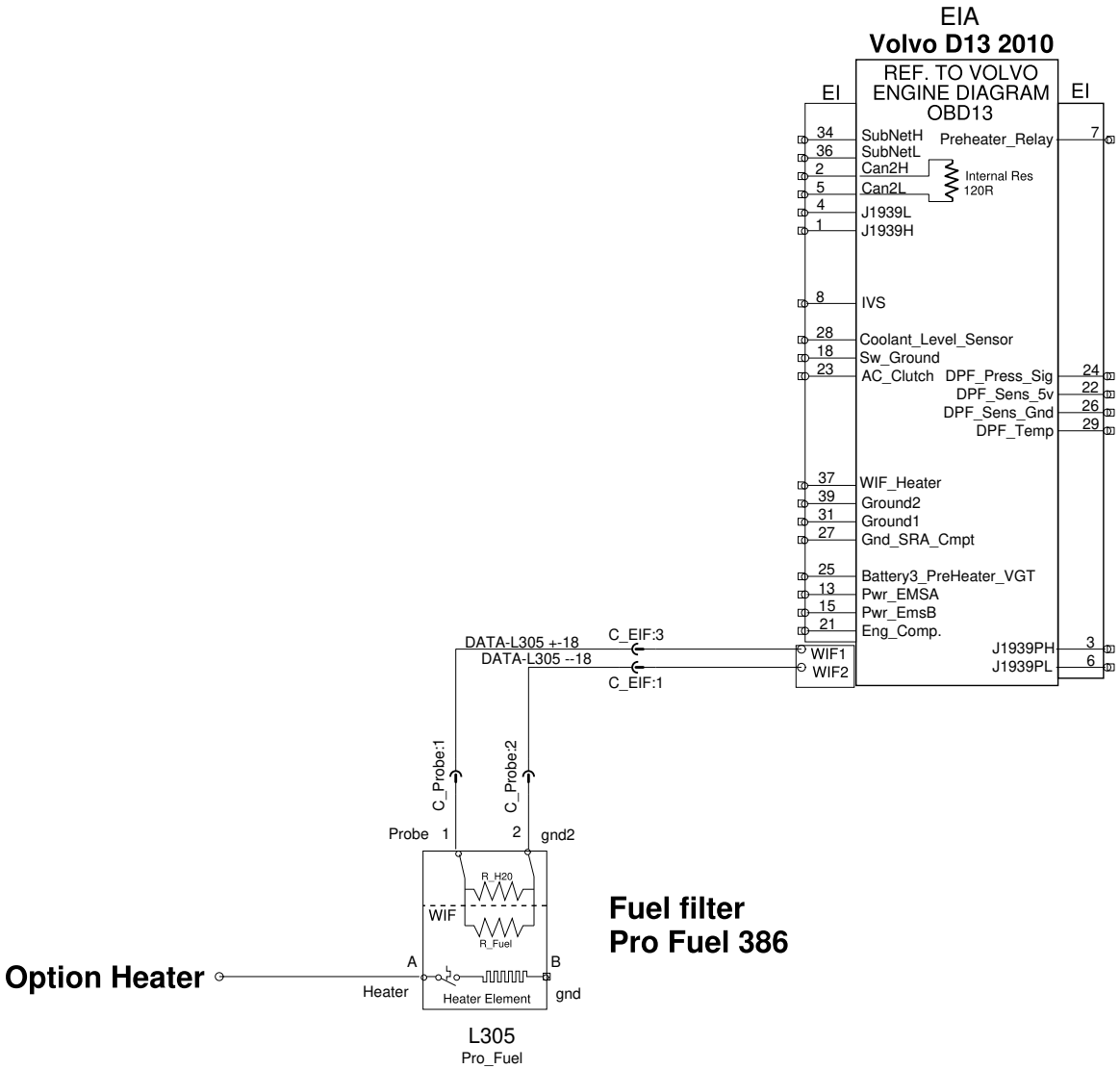

Marker and FLasher Lights Additionnal

Customer Adaptation

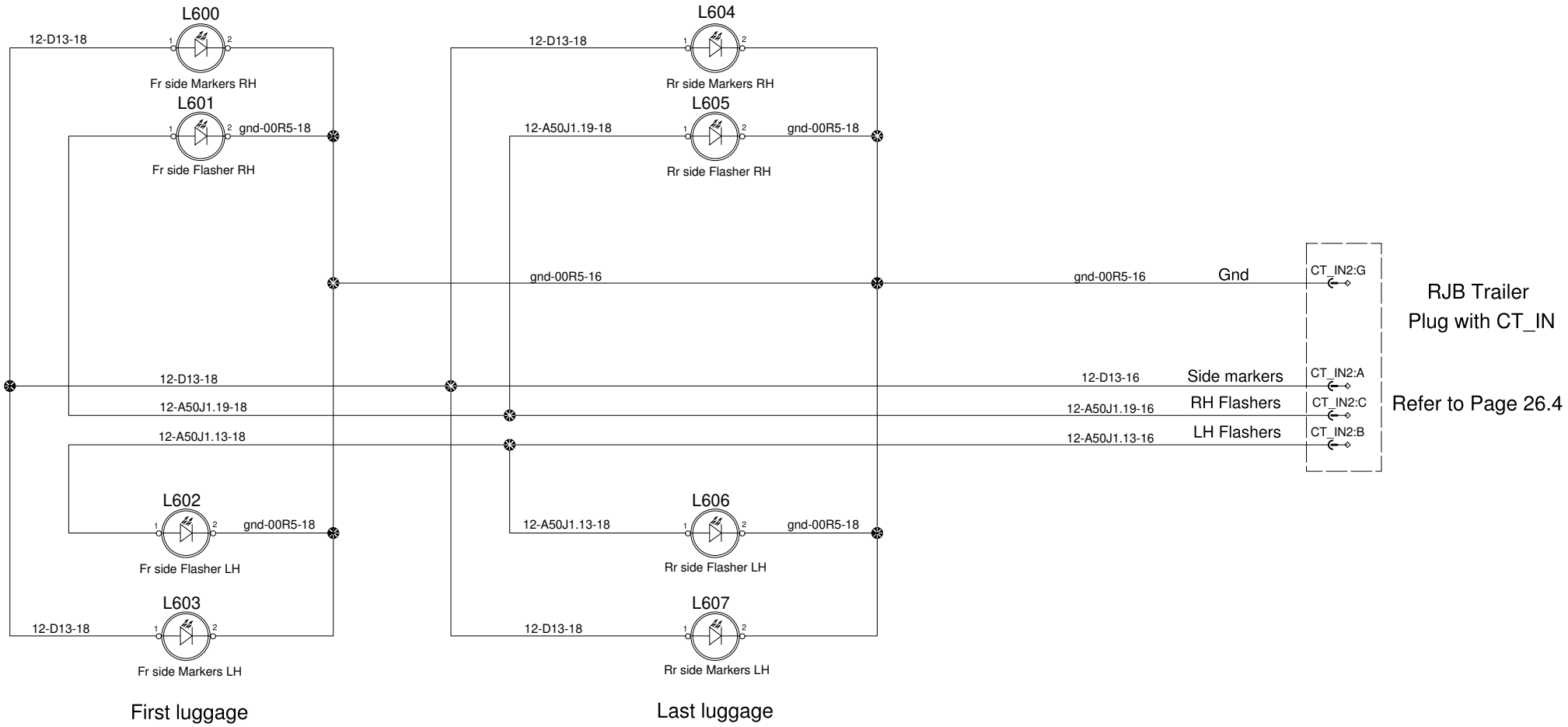

Marker and FLasher Lights Additionnal
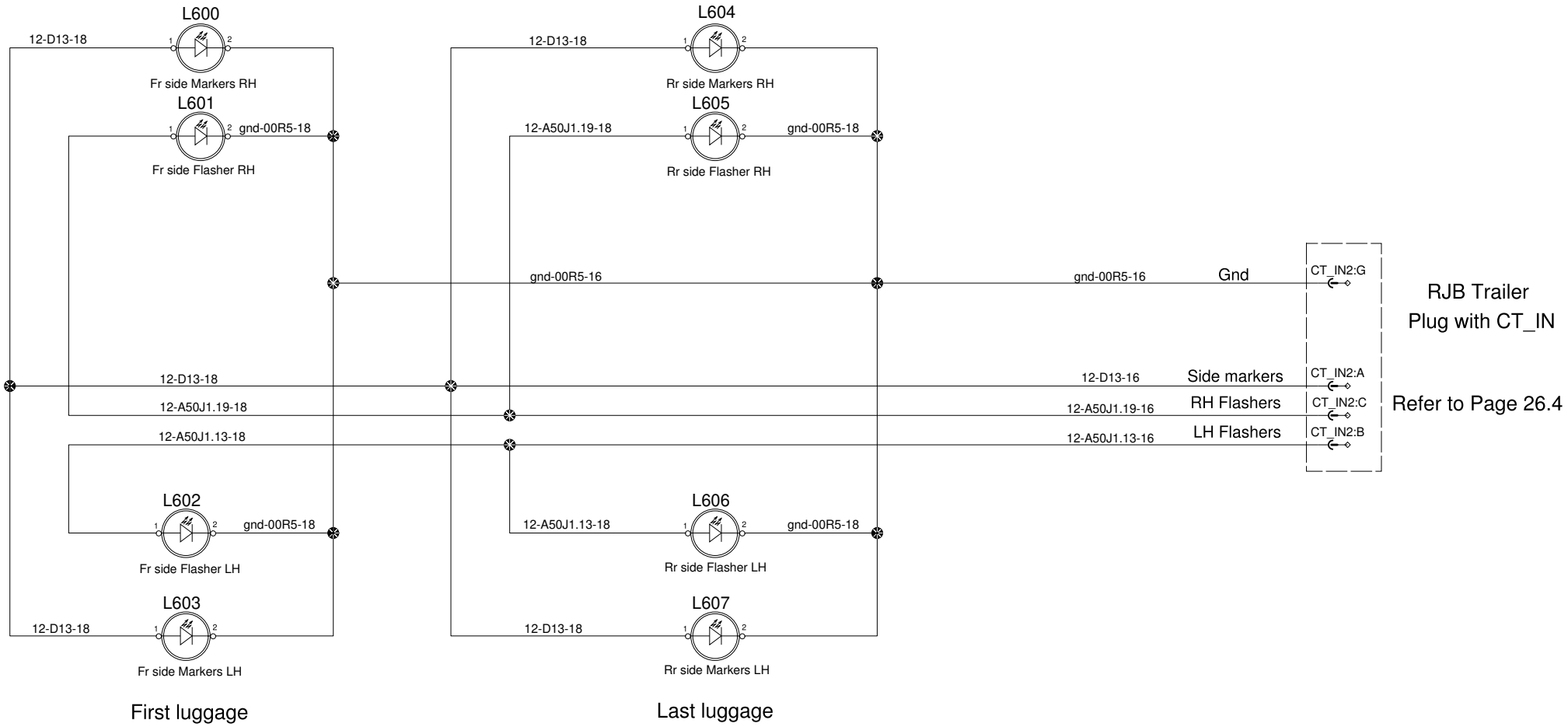
Customer Adaptation