# Saucon Prox - Intelligent Transp. System
## Customer Adaptation

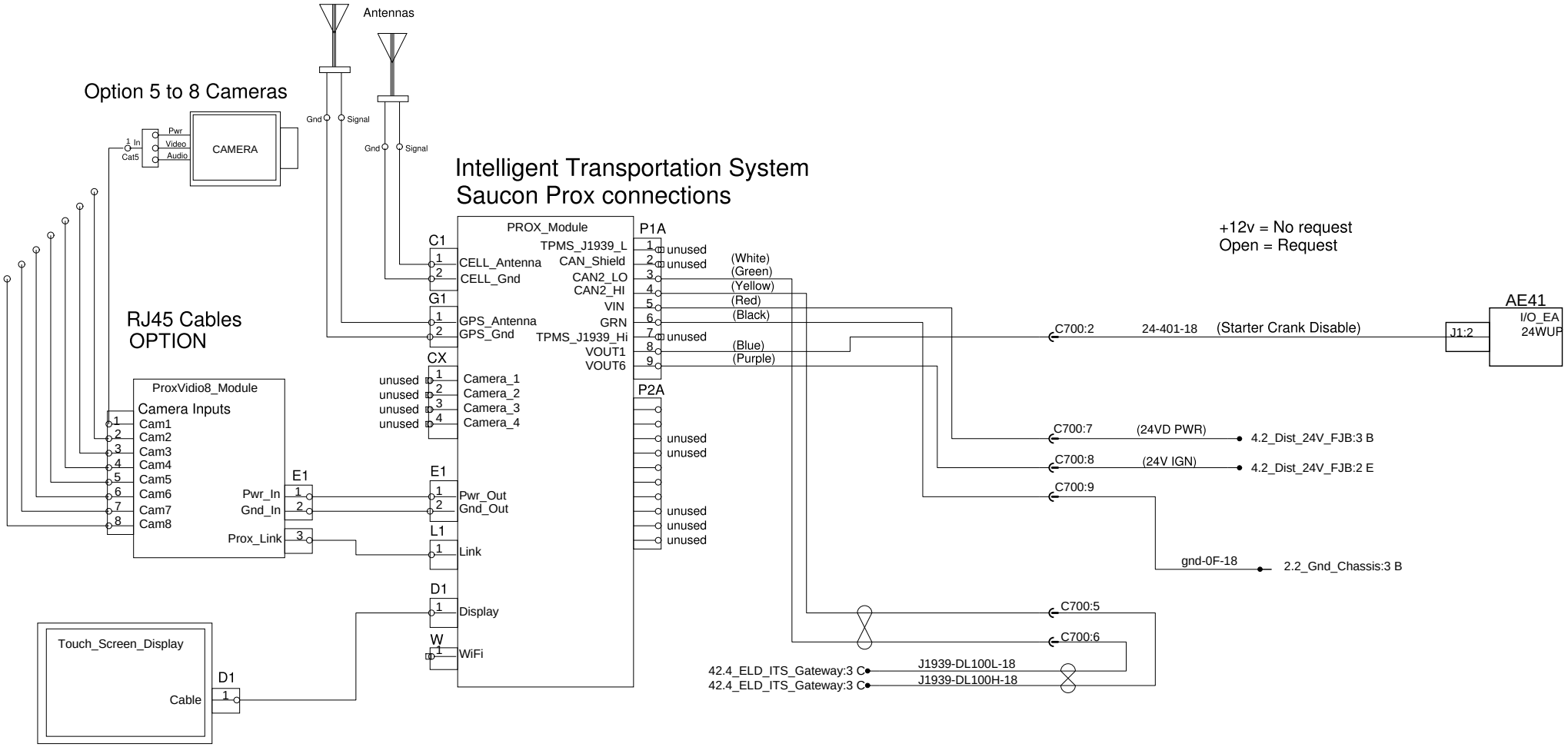


| PREVOST® | WIRING DIAGRAM | No:D061550 | Page:42.3 SP**5** | Rev:02 |
|---|---|---|---|---|