Spares wires

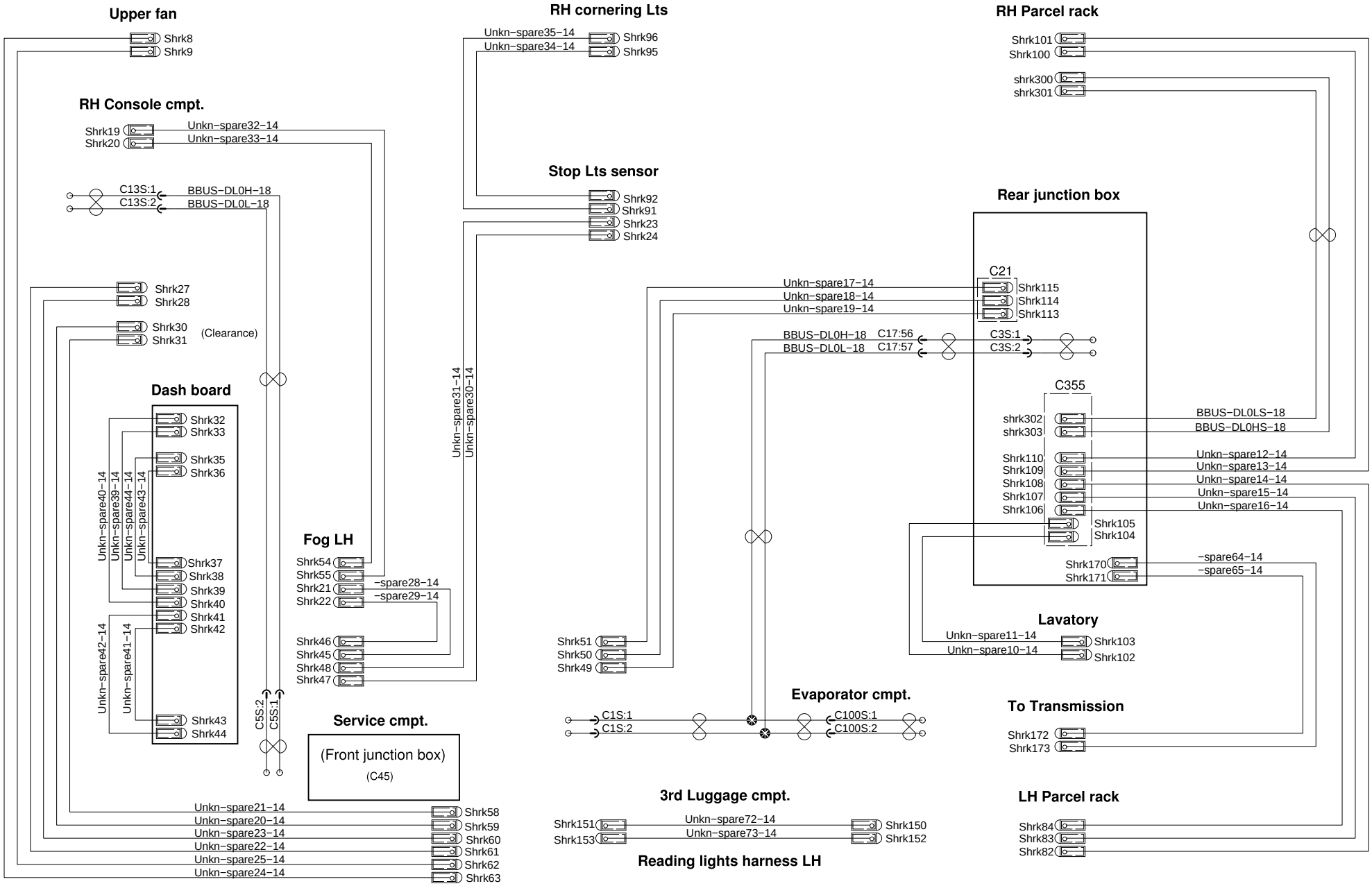

PREVOST®	WIRING DIAGRAM	No:D061550	Page:8.1	Rev:2