HVAC defroster

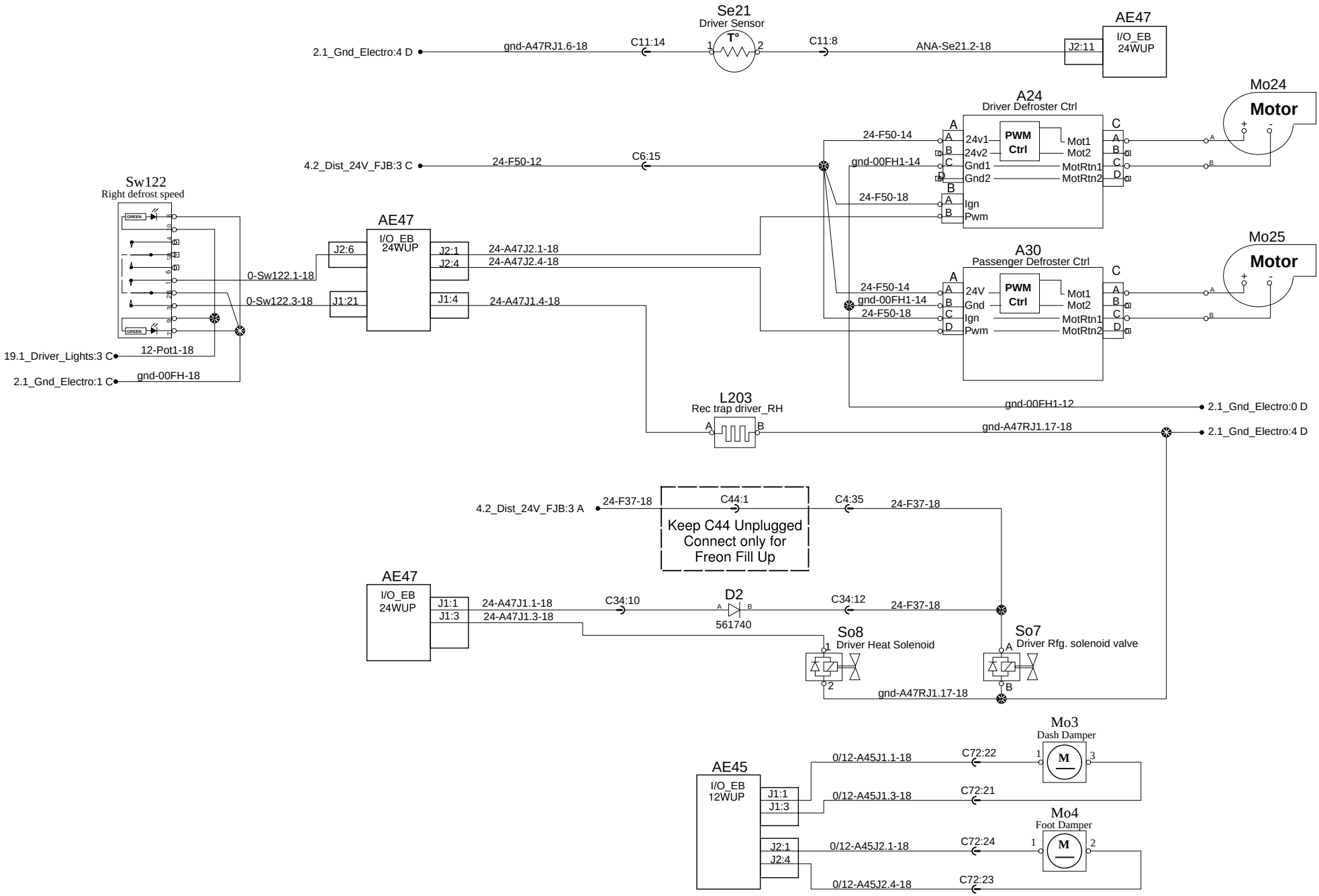

PREVOST®	WIRING DIAGRAM	No:D061670	Page:18.1	Rev:19