# Ignition and engine start

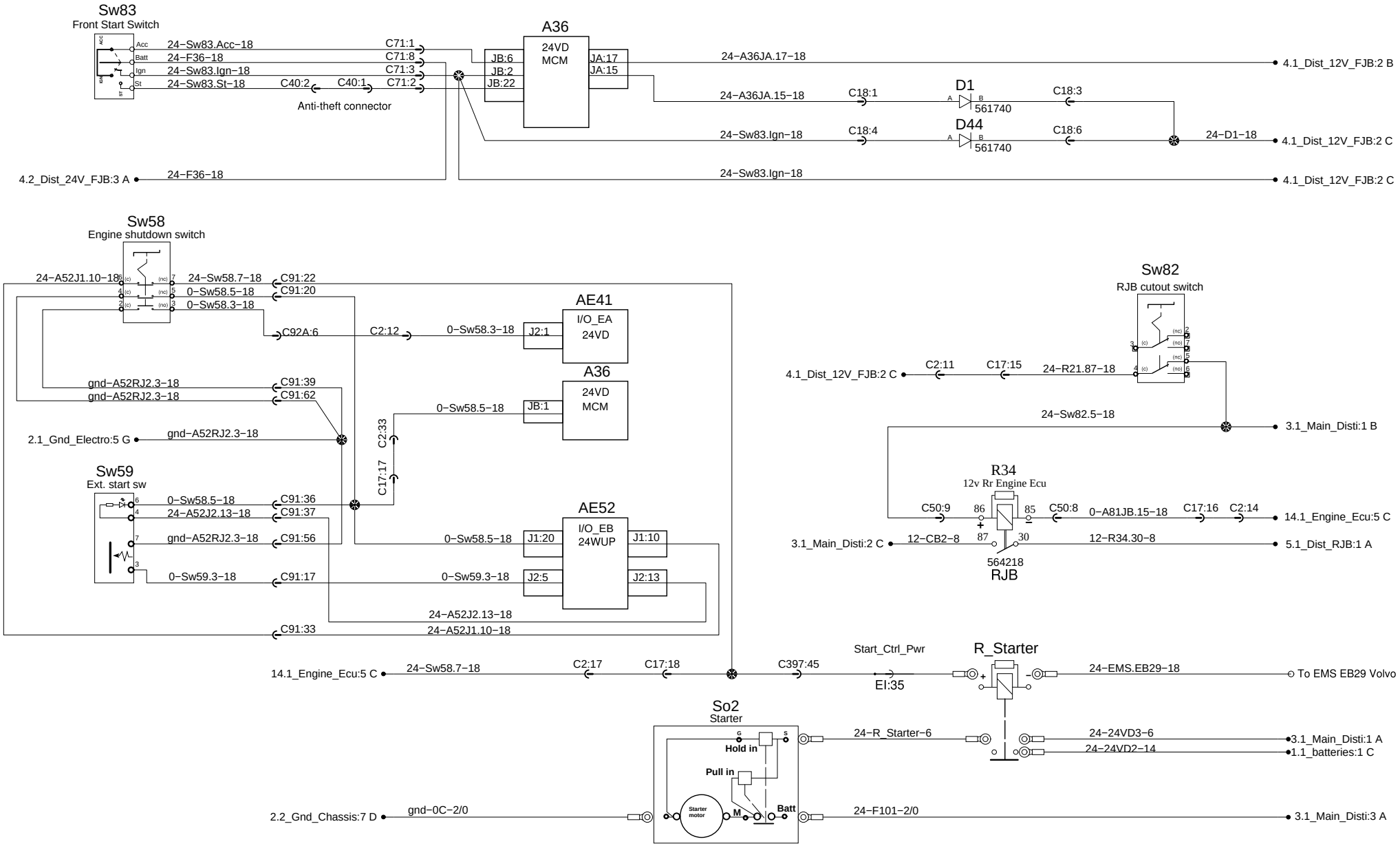


| PREVOST® | WIRING DIAGRAM | No:D061670 | Page:3.2 | Rev:1 |
|---|---|---|---|---|