Ignition and engine start

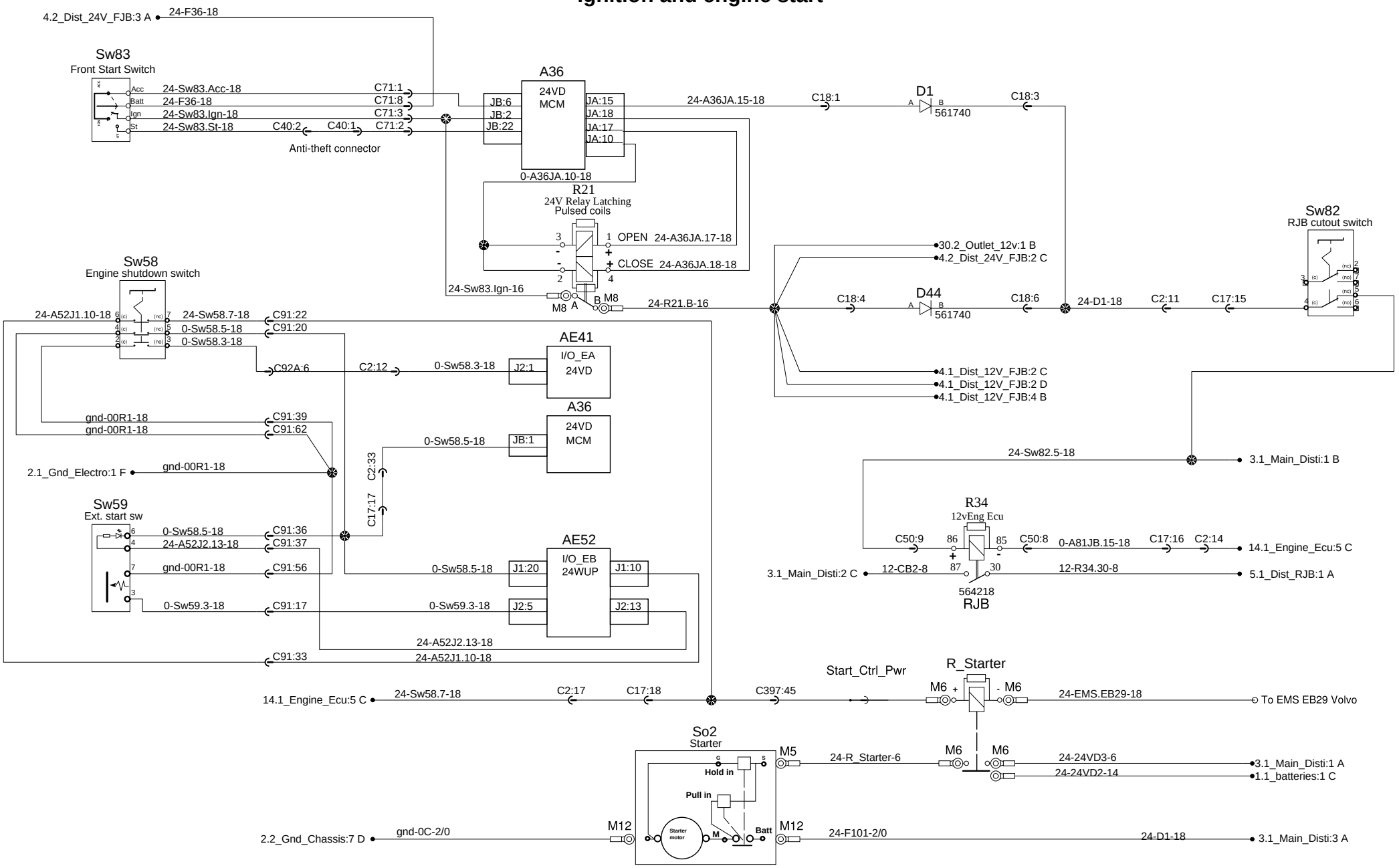

PREVOST®	WIRING DIAGRAM	No:D061670	Page:3.2	Rev:14