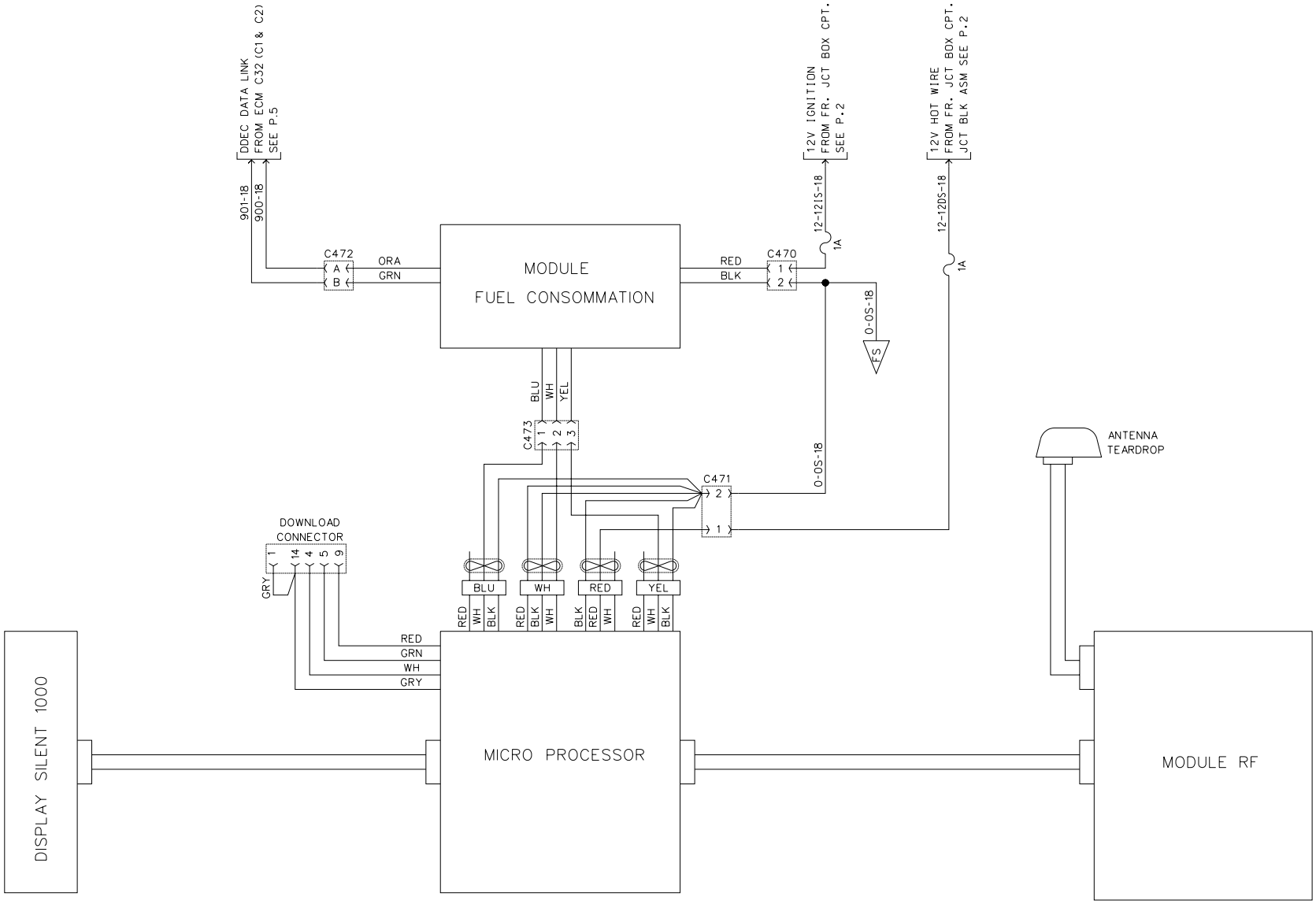

SILENT 1000

PREVOST	WIRING DIAGRAM	NO: D060882	PAGE: 15SP1	REVISION 00