PREVOST

WIRING DIAGRAM

AIR DRYER

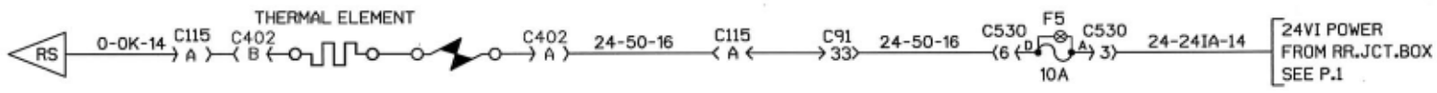

FUEL WATER FILTER

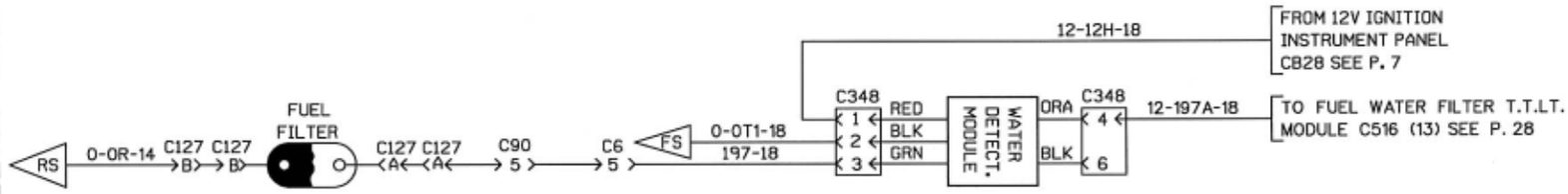

ETHER COLD START

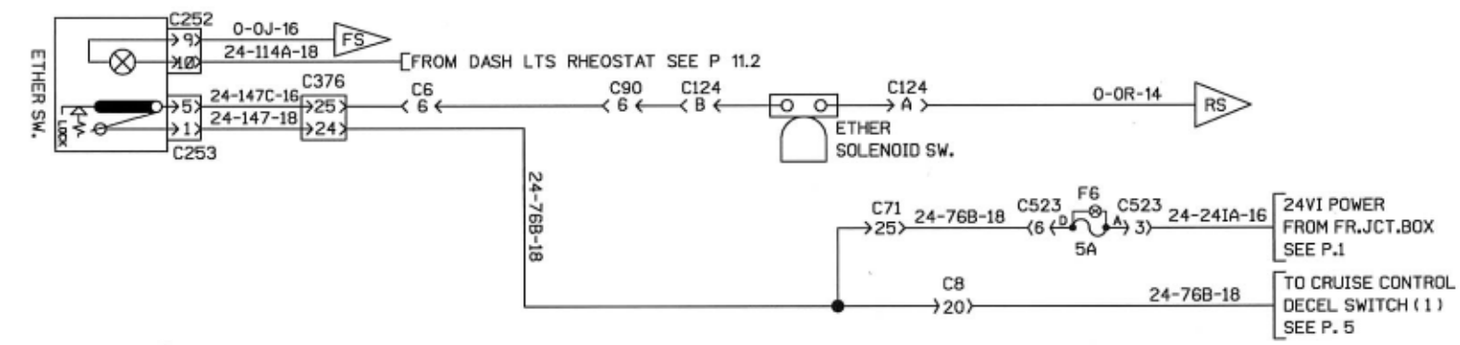

PARKING BRAKE SWITCH

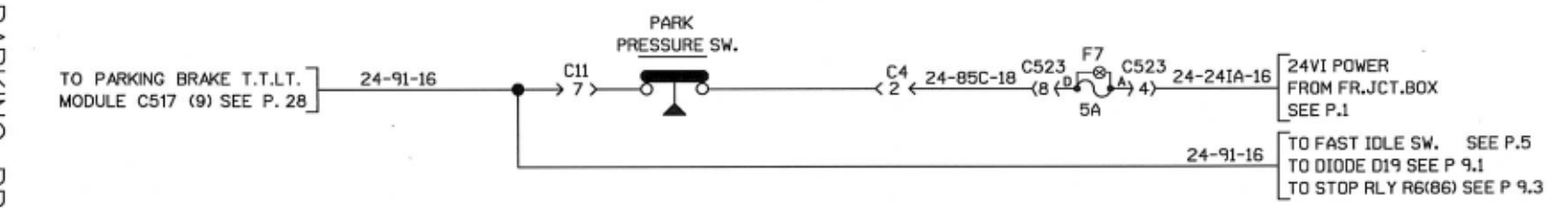

RADIATOR FAN CLUTCH

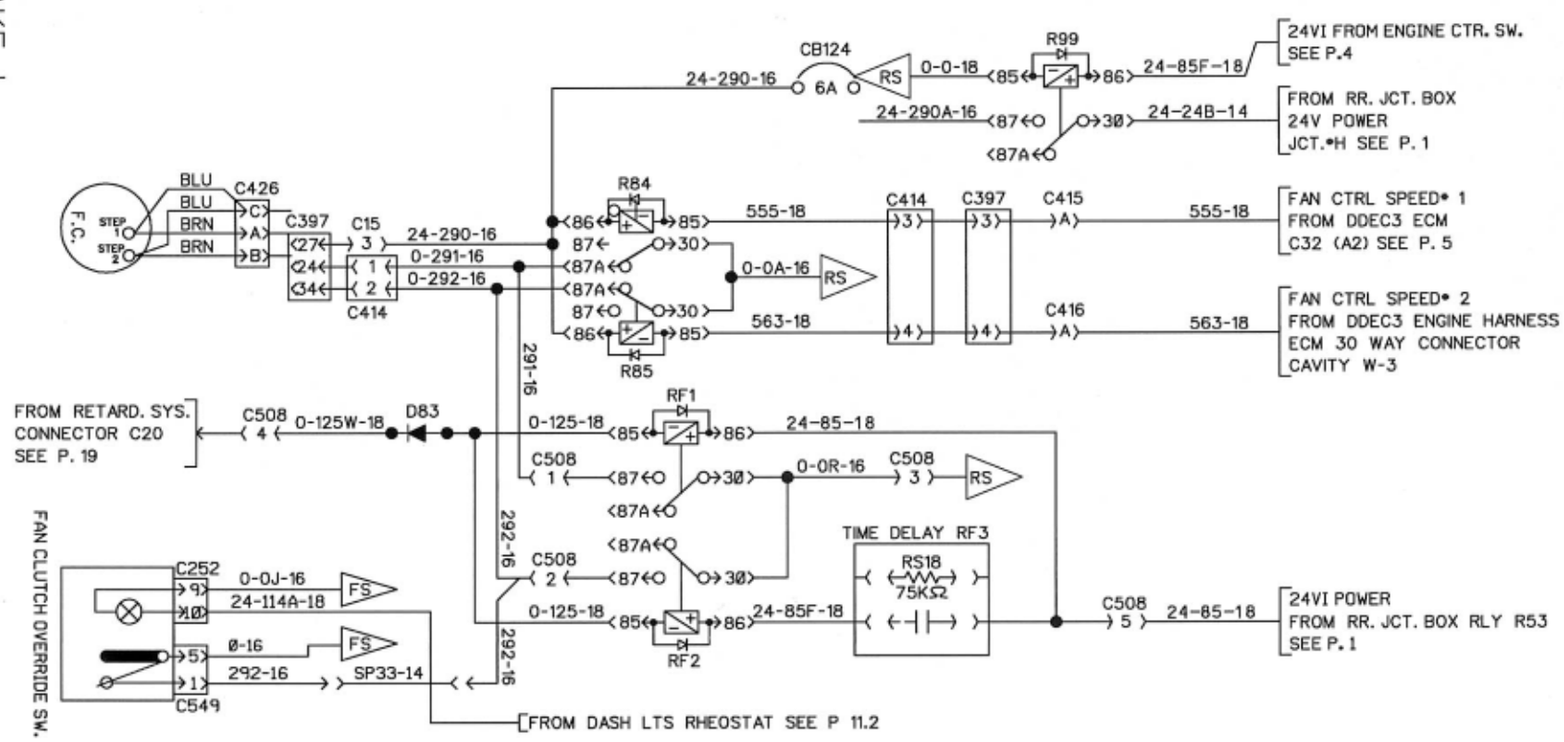

PRODRIVER

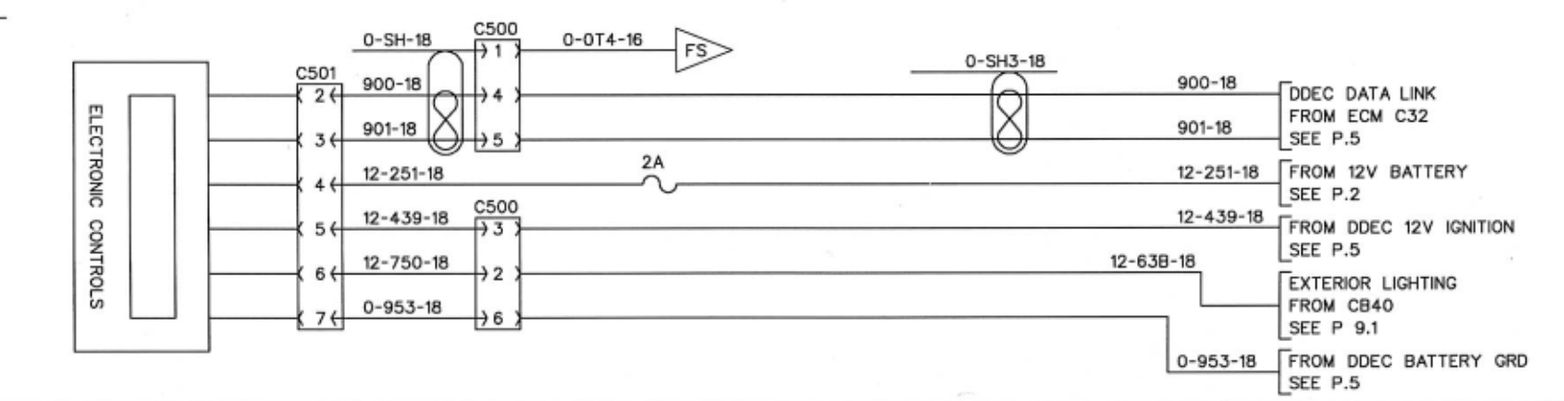

NO: D060882

PAGE: 8sp1

REVISION 01