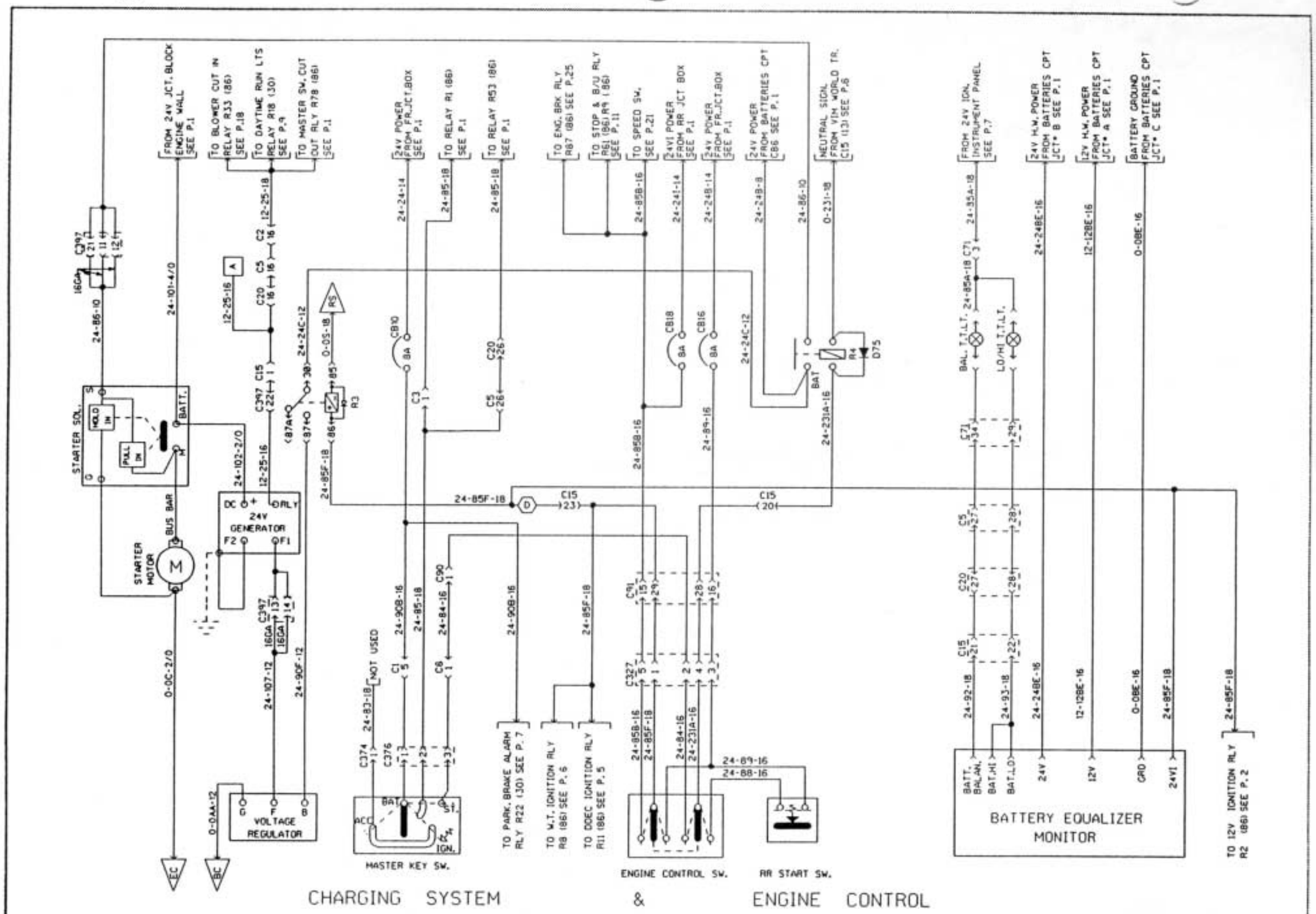

PREVOST CAR inc.	WIRING DIAGRAM	NO: D060842	REVISION DATE 94-05-18	P. 4