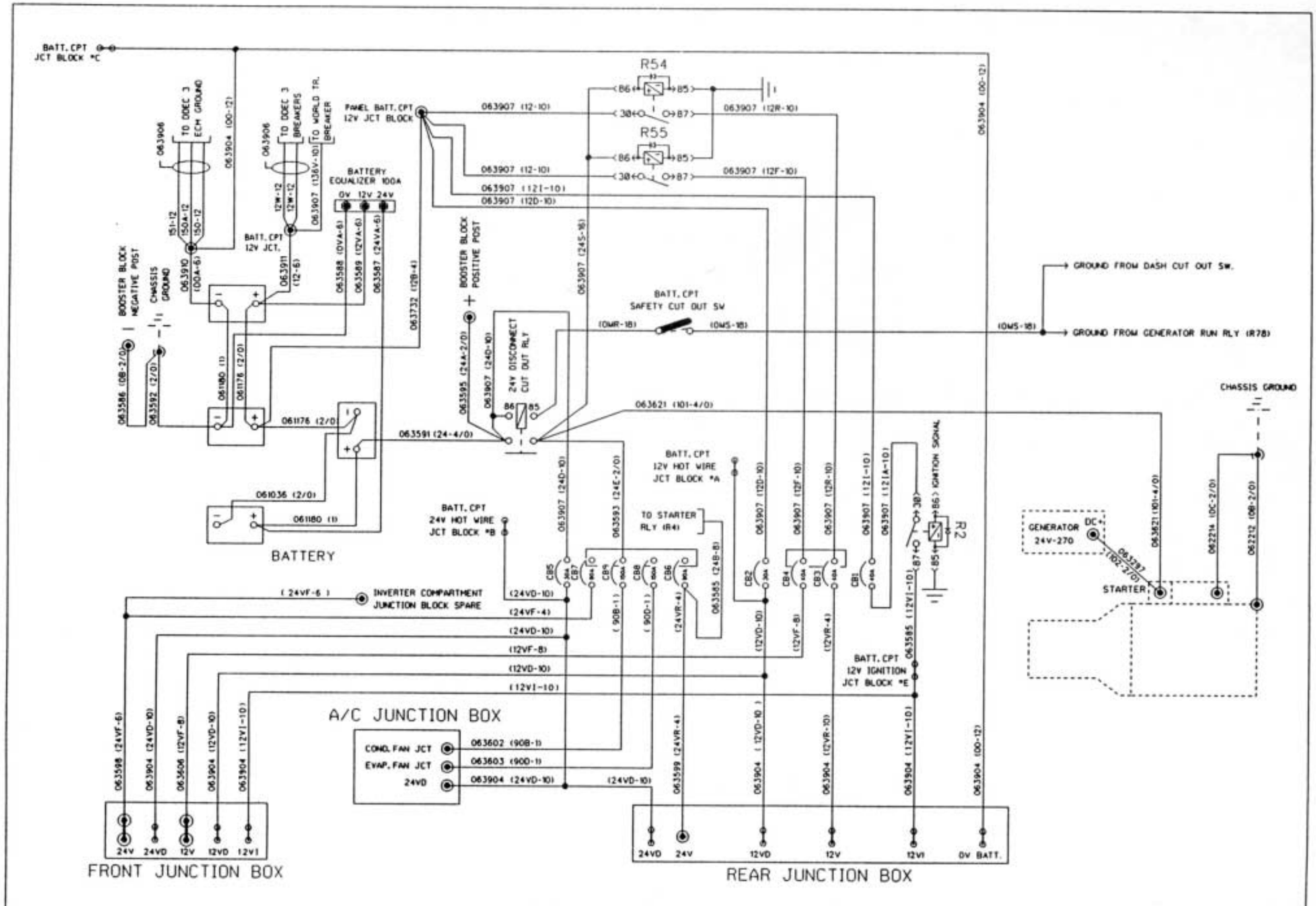

PREVOST CAR inc.	WIRING DIAGRAM	NO: D060842	REVISION DATE 94-04-01	P. Ba 1/2

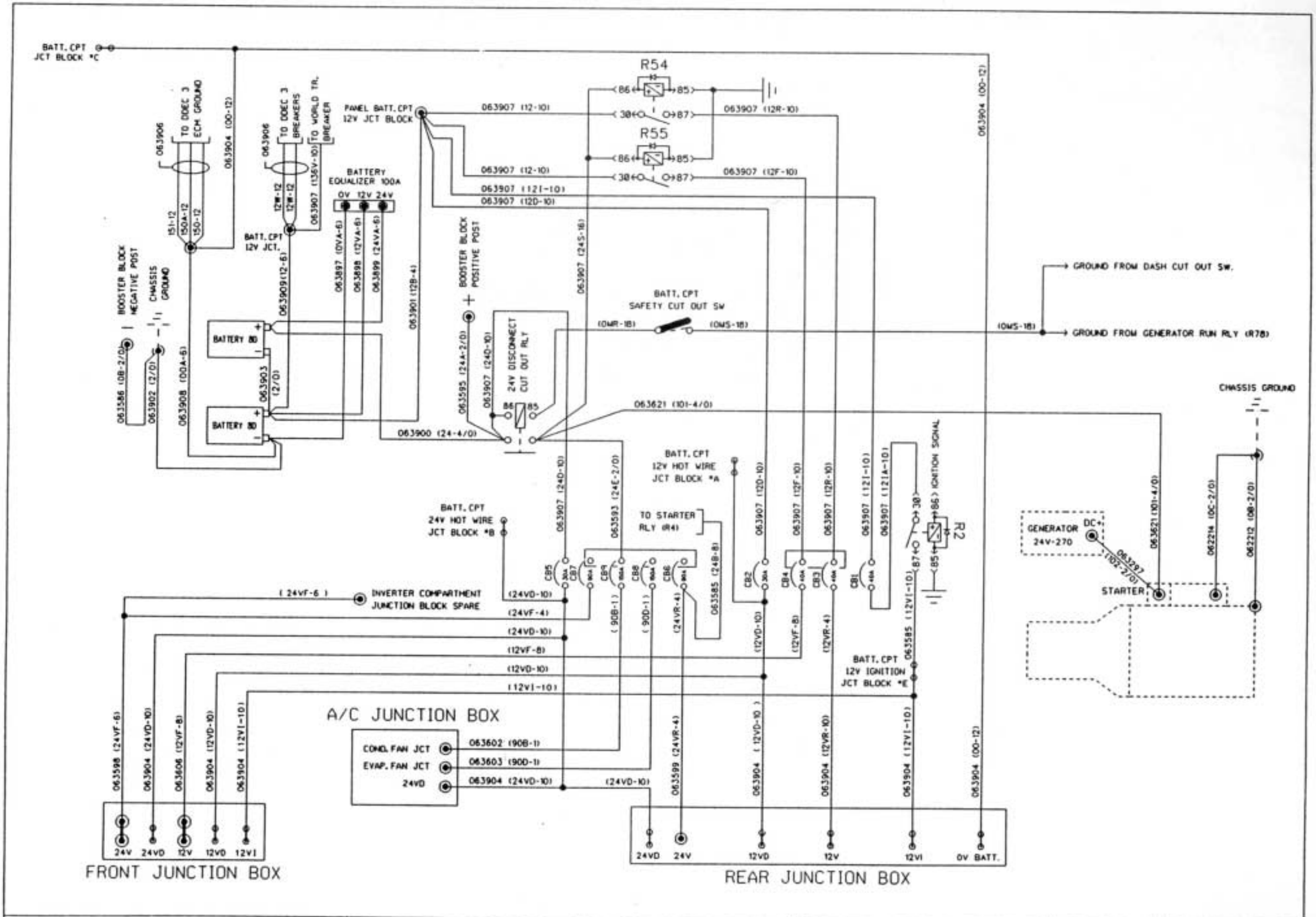

PREVOST CAR inc.	WIRING DIAGRAM	NO: D060842	REVISION DATE 94-04-01	P. Ba 2/2