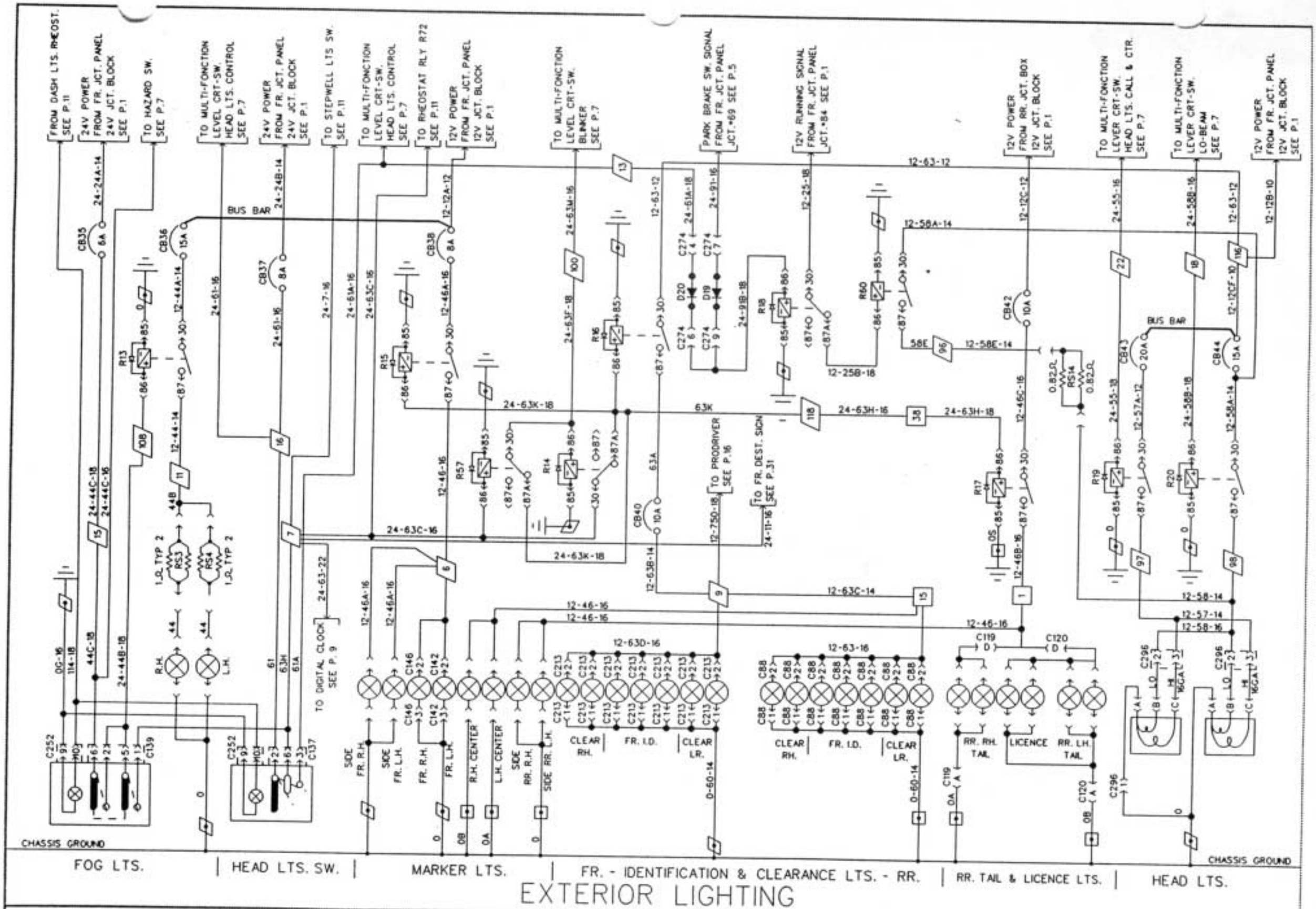

EXTERIOR LIGHTING

PREVOST CAR inc.	WIRING DIAGRAM	NO: D060811	REVISION DATE 95-02-08	P. 6