CTGI - Customer Telematic Gateway Interface
J1939

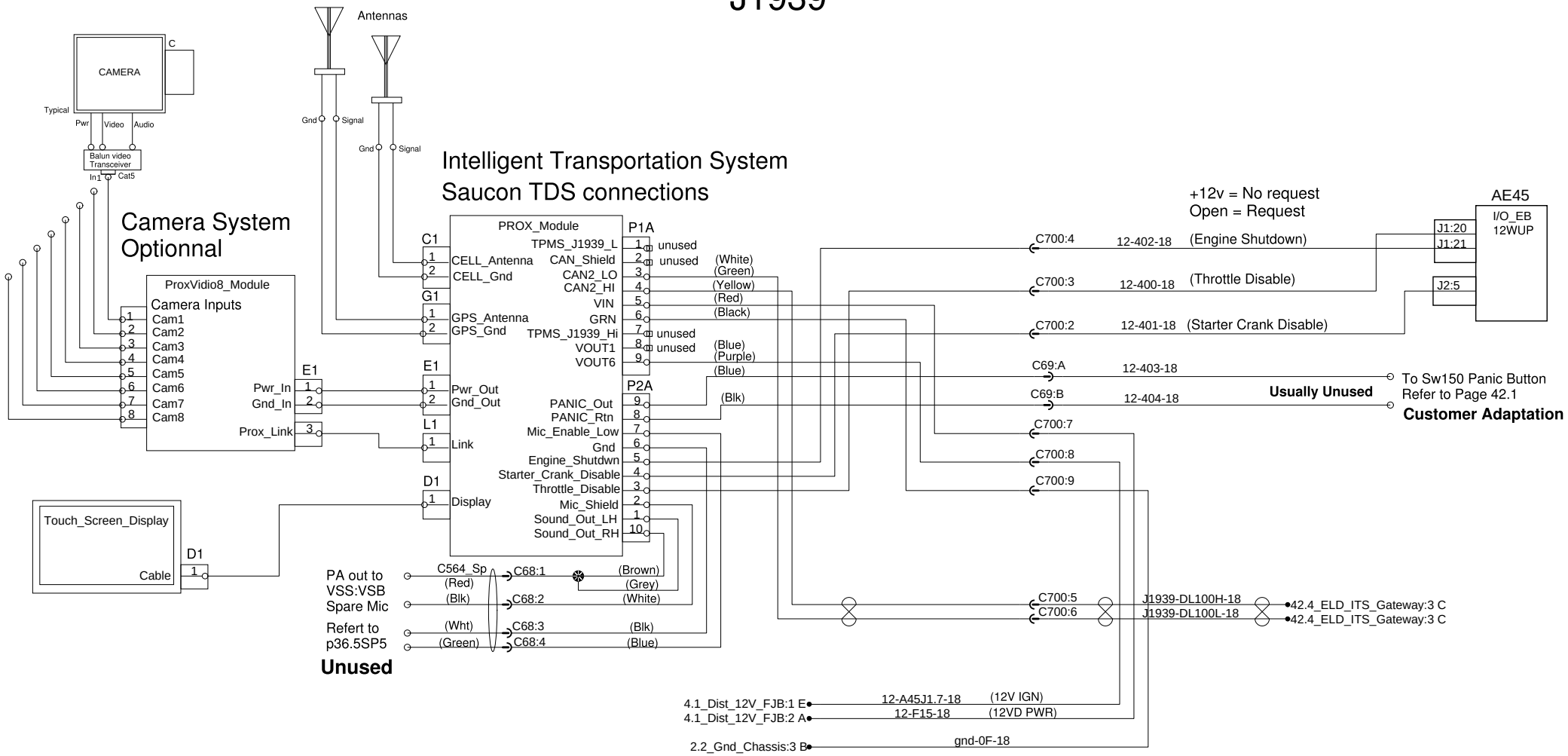

PREVOST®	WIRING DIAGRAM	No:D061640	Page:42.3	Rev:0