Additional Aisle Lighting
Customer Adaptation

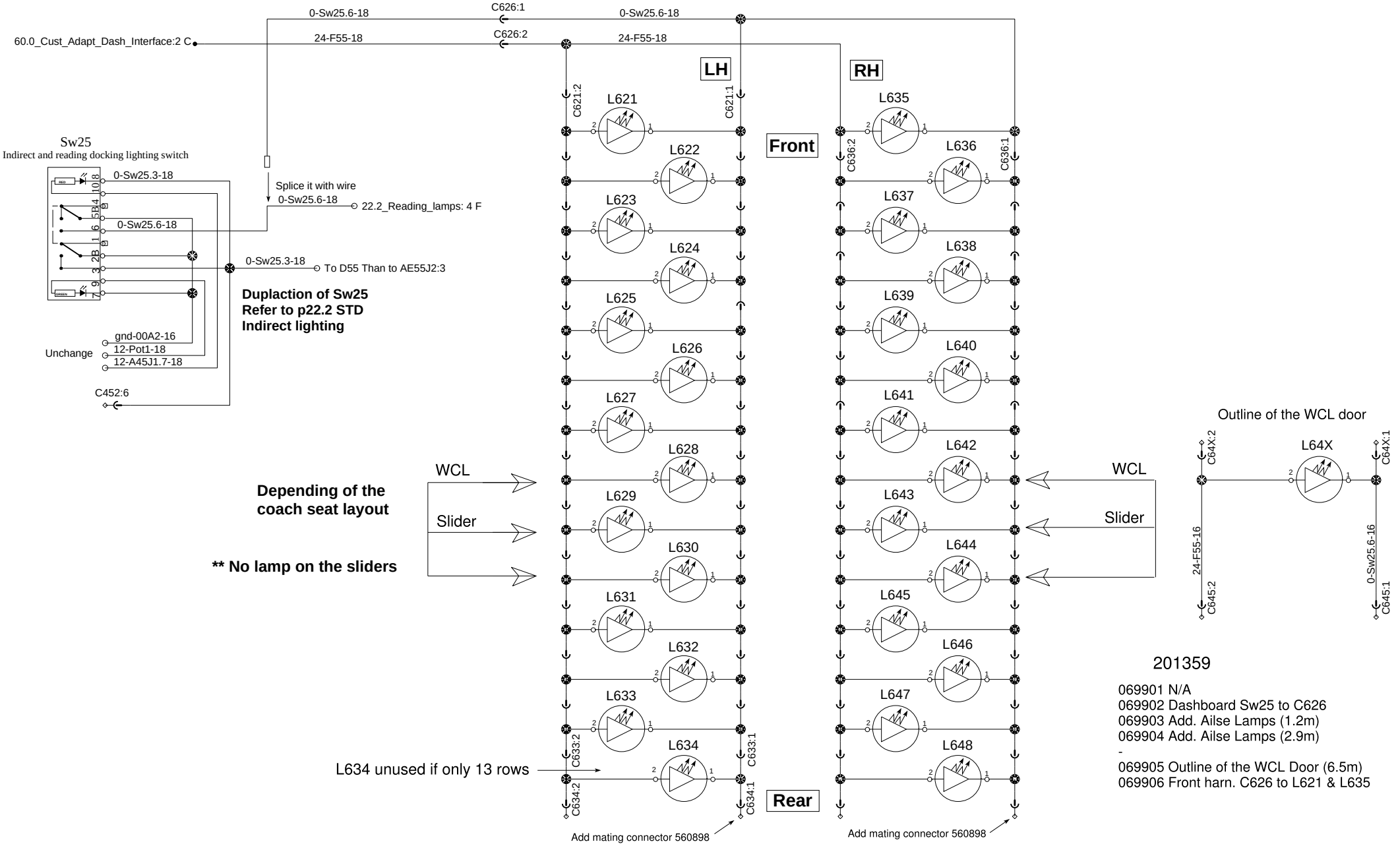

PREVOST®	WIRING DIAGRAM	No:D061640	Page:60.20 SP1	Rev:00