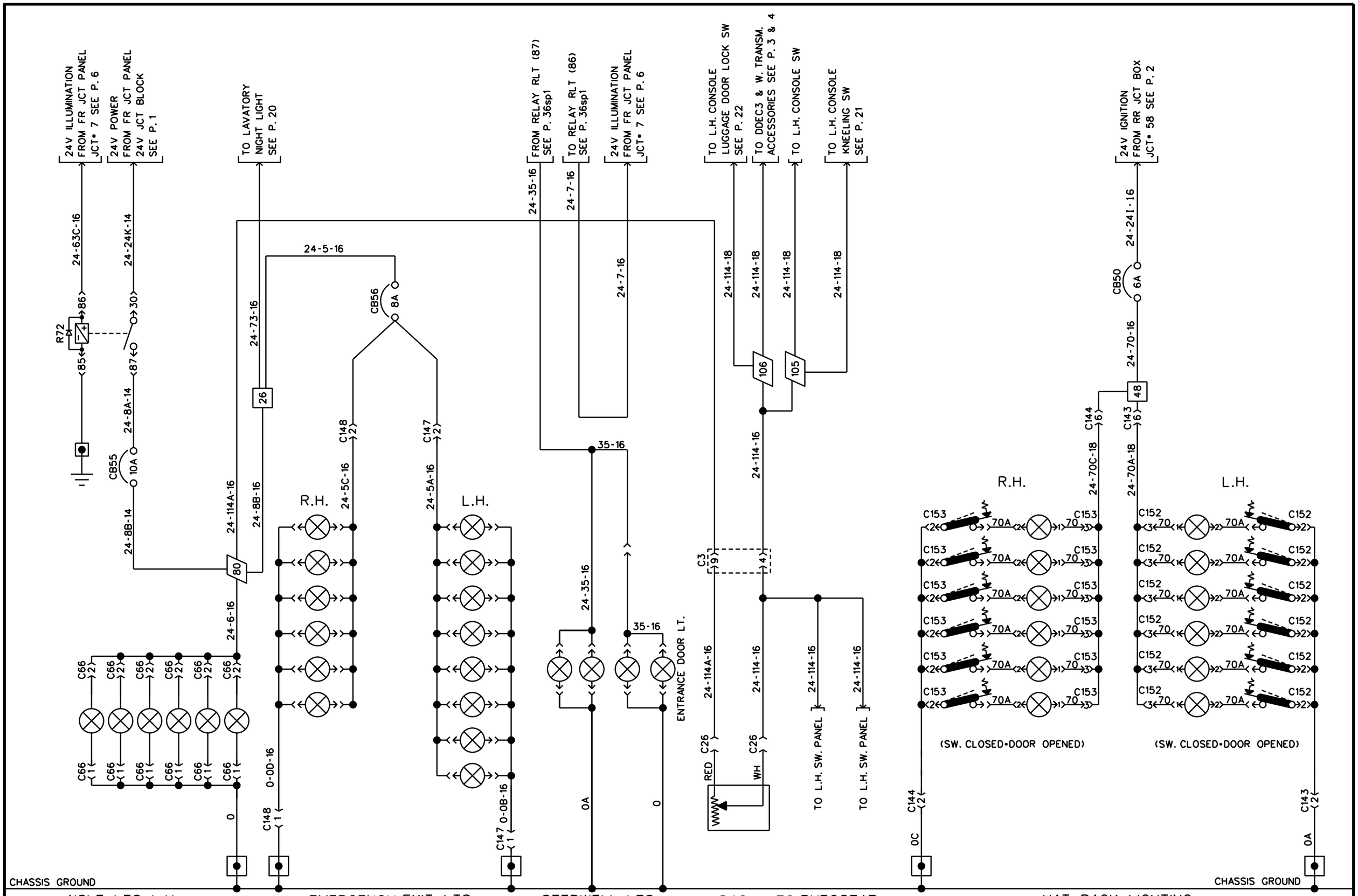

INTERIOR LIGHTING

PREVOST CAR inc.	WIRING DIAGRAM	NO: D060871	P. 11 sp1	REVISION 00