12V Power distribution front junction box

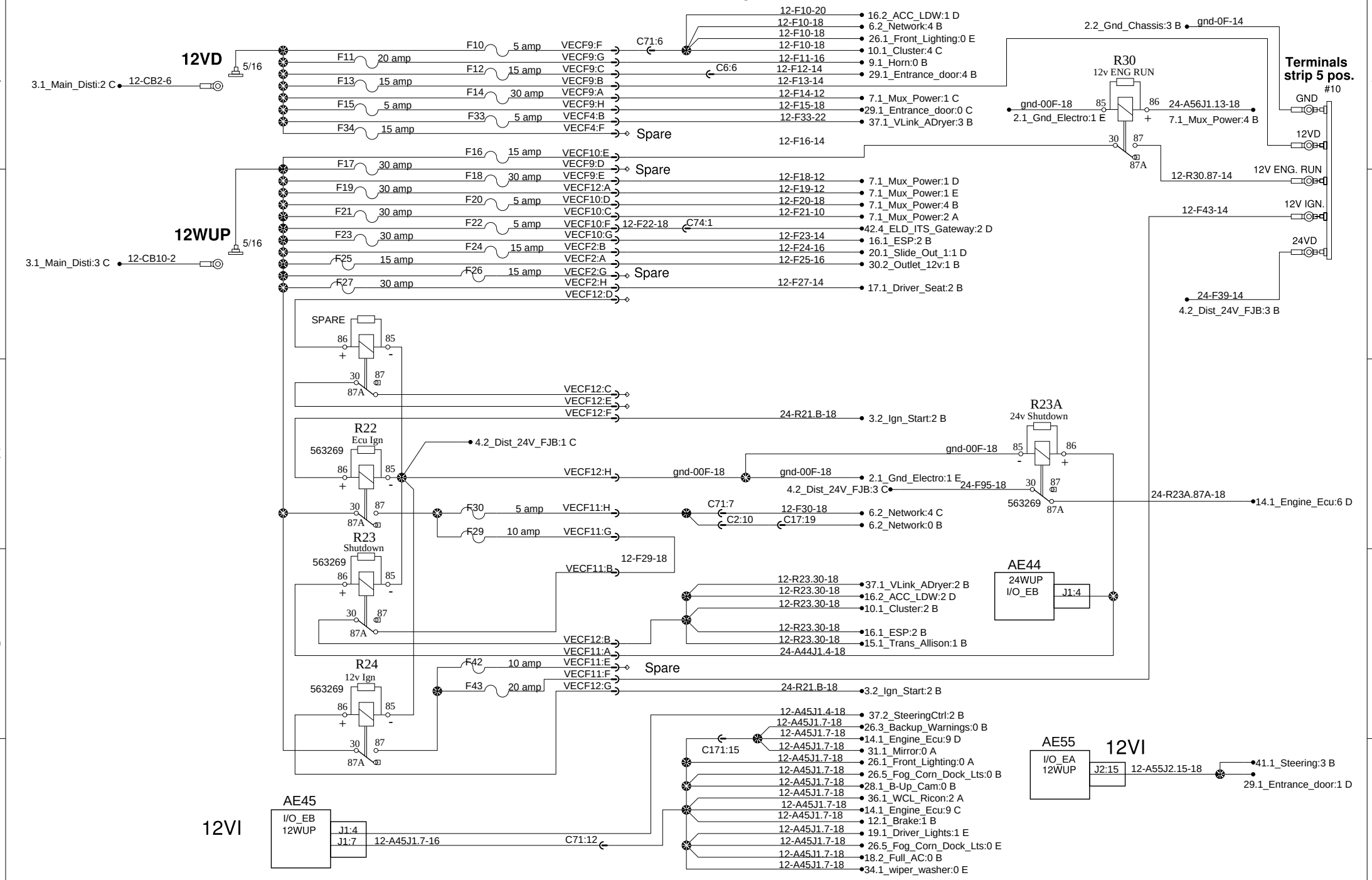

PREVOST®	WIRING DIAGRAM	No:D061760	Page:4.1	Rev:8