Brake, Brake interlock and Retarder

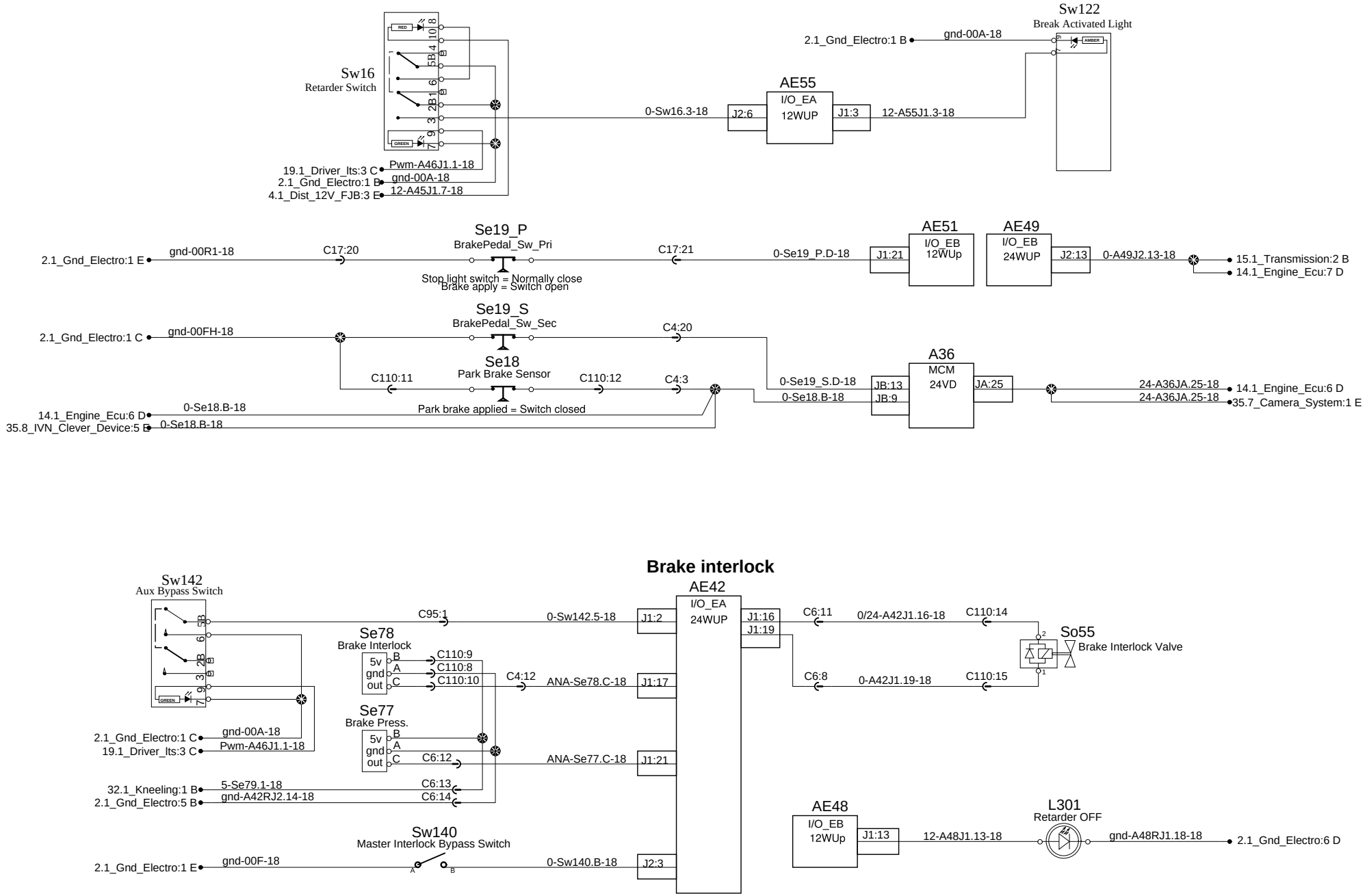

PREVOST®	WIRING DIAGRAM	No:D061780	Page:12.1	Rev:3