Hvac defroster

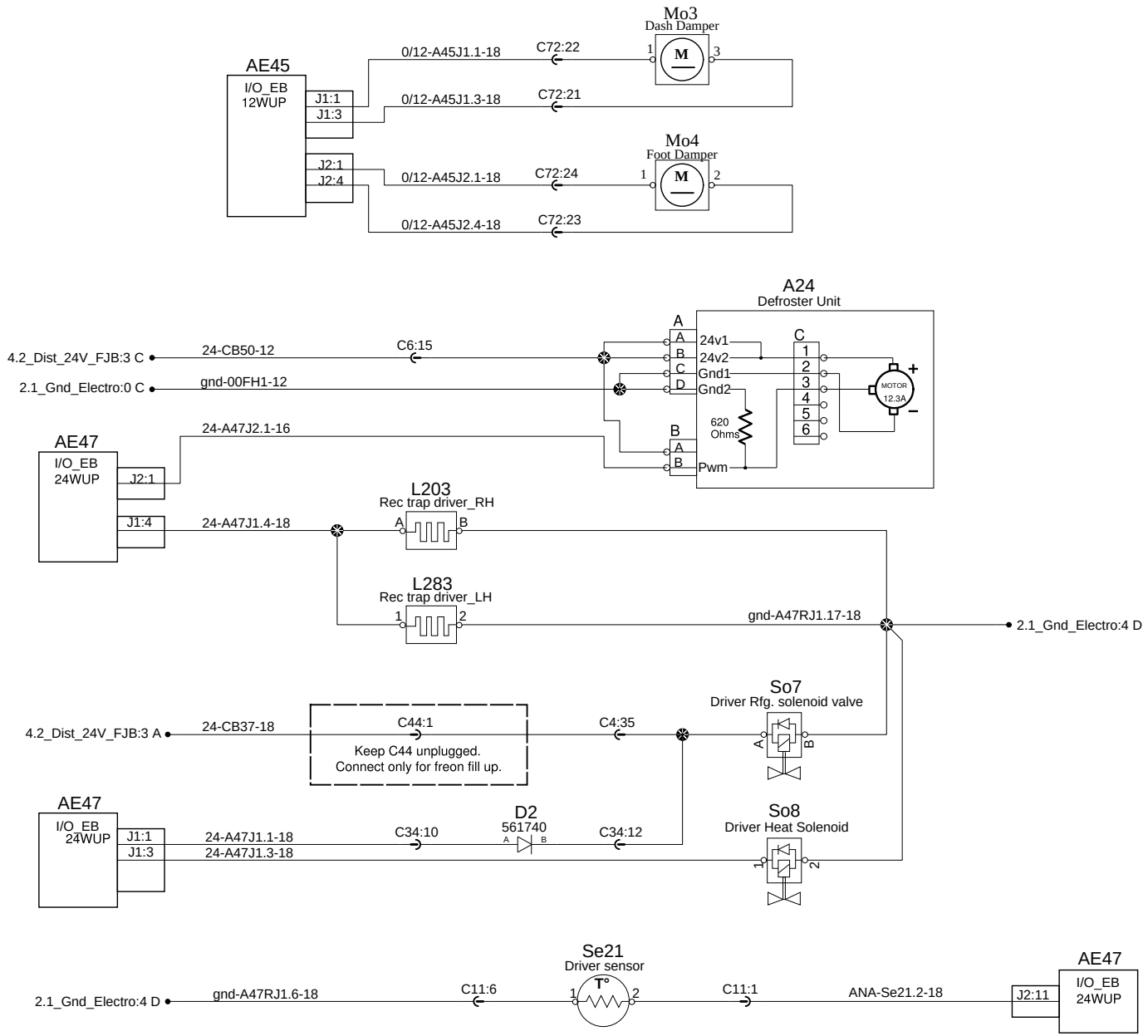

PREVOST®	WIRING DIAGRAM	No:D061780	Page:18.1	Rev:3