Driver's lights

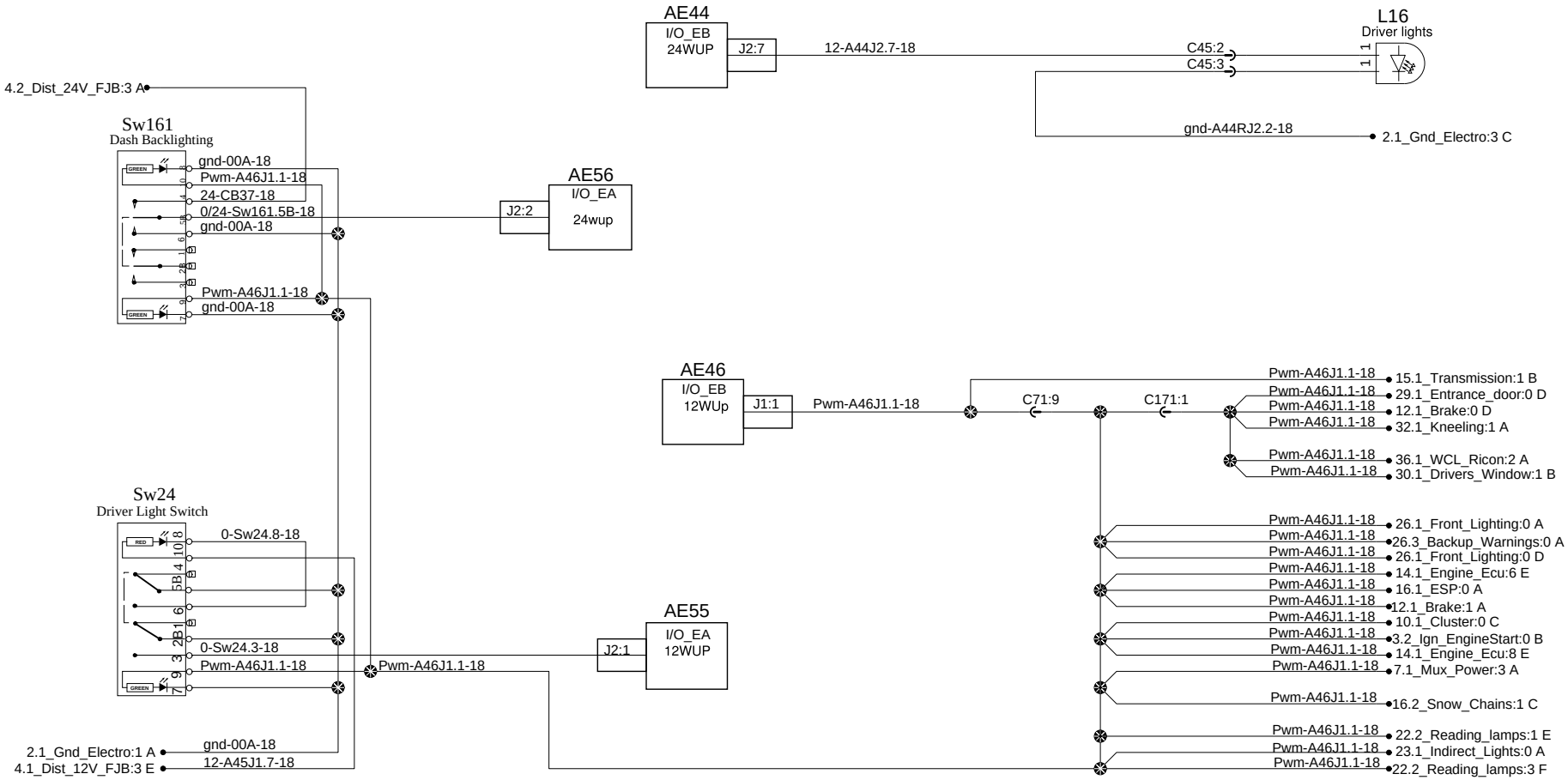

PREVOST®	WIRING DIAGRAM	No:D061780	Page:19.1	Rev:3