12V Power distribution front junction box

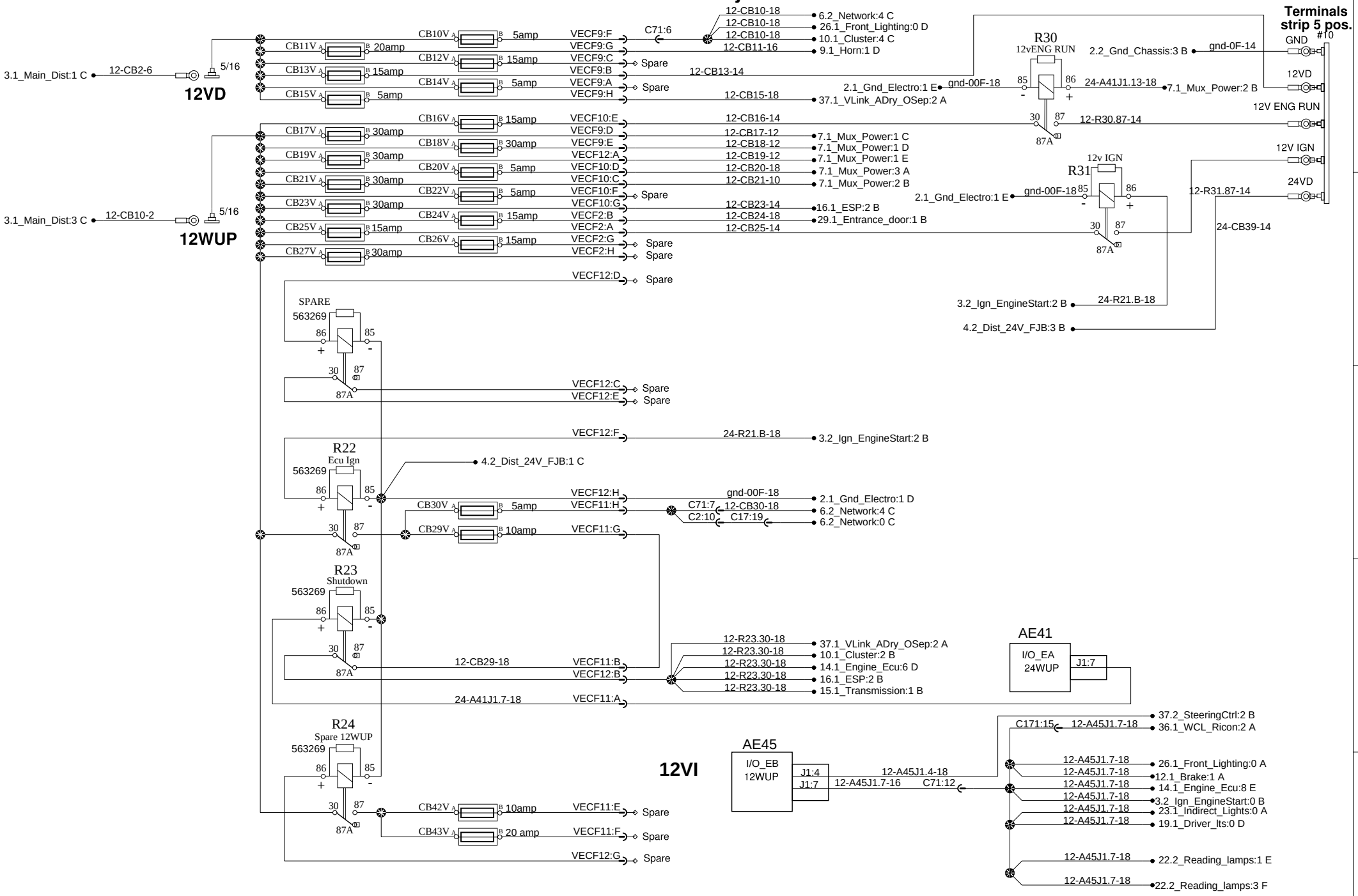

PREVOST®	WIRING DIAGRAM	No:D061780	Page:4.1	Rev:4