Gateway

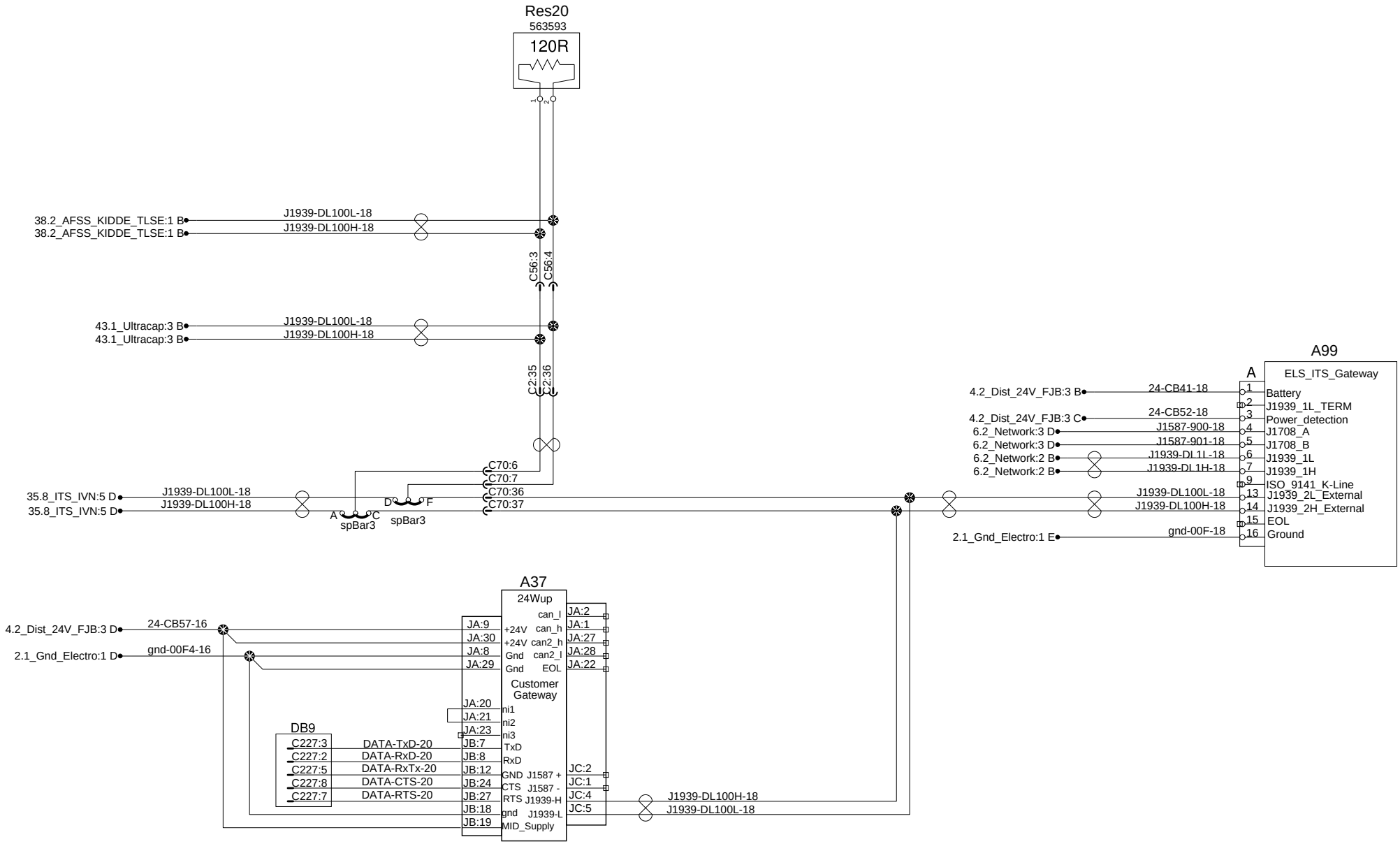

PREVOST®	WIRING DIAGRAM	No:D061780	Page:42.1	Rev:7