Docking and Fog lights (Option)

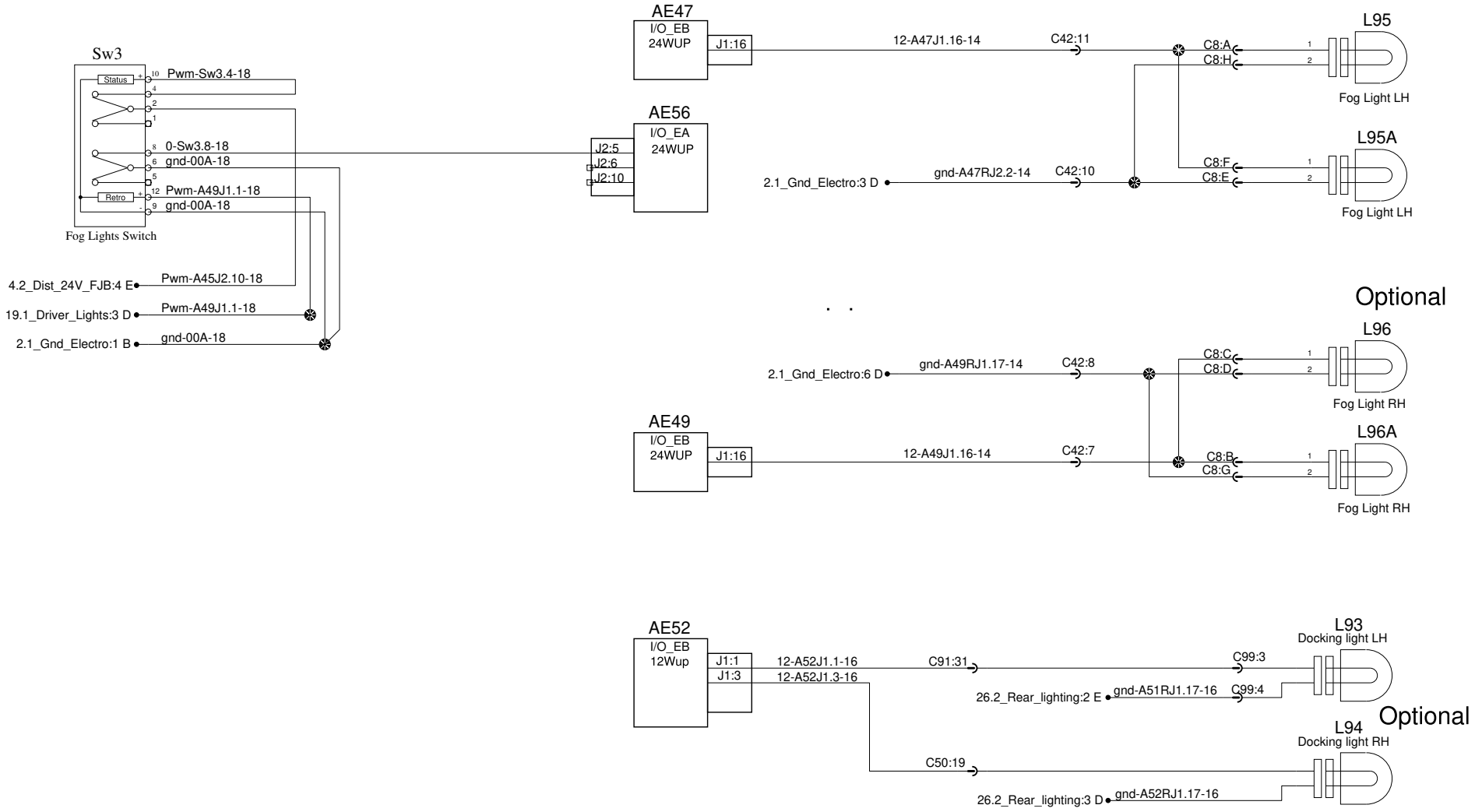

PREVOST®	WIRING DIAGRAM	No:D062140	Page:26.5	Rev:3