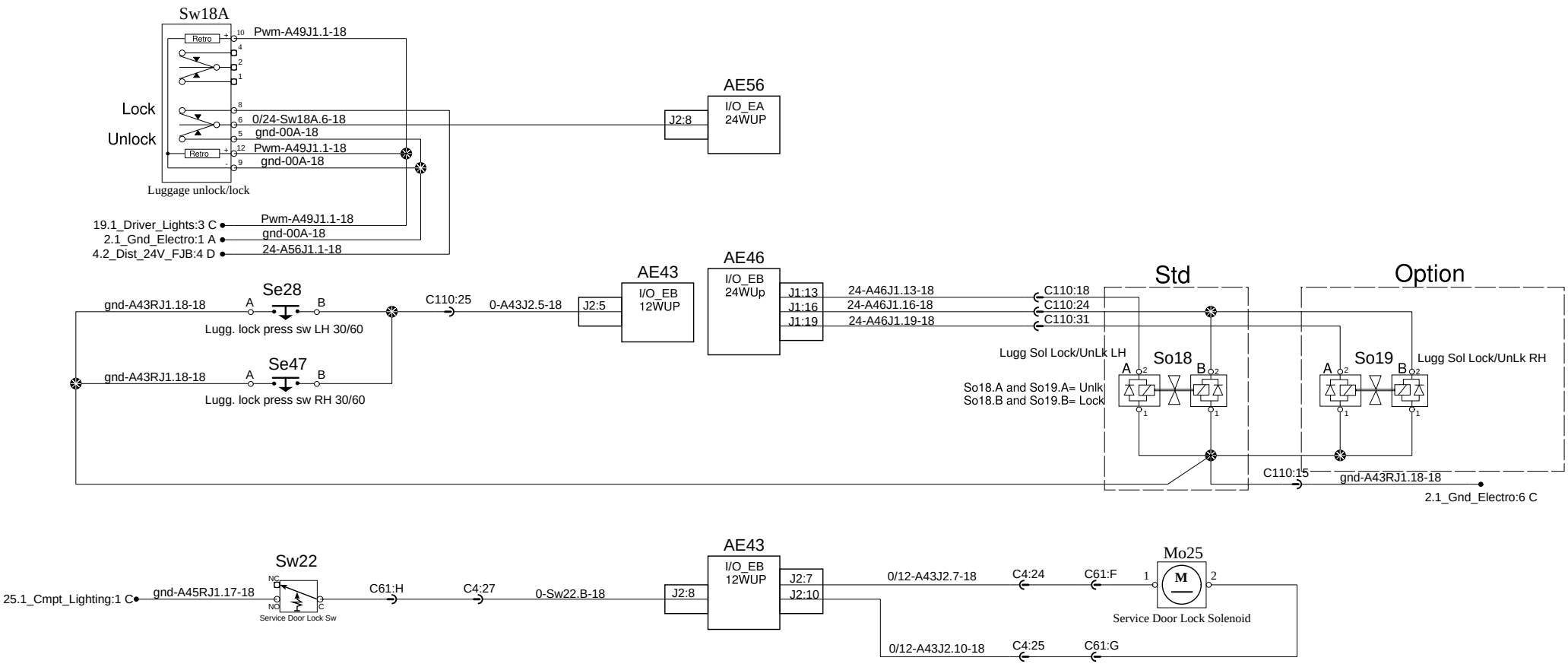Luggage door Lock/Unlock