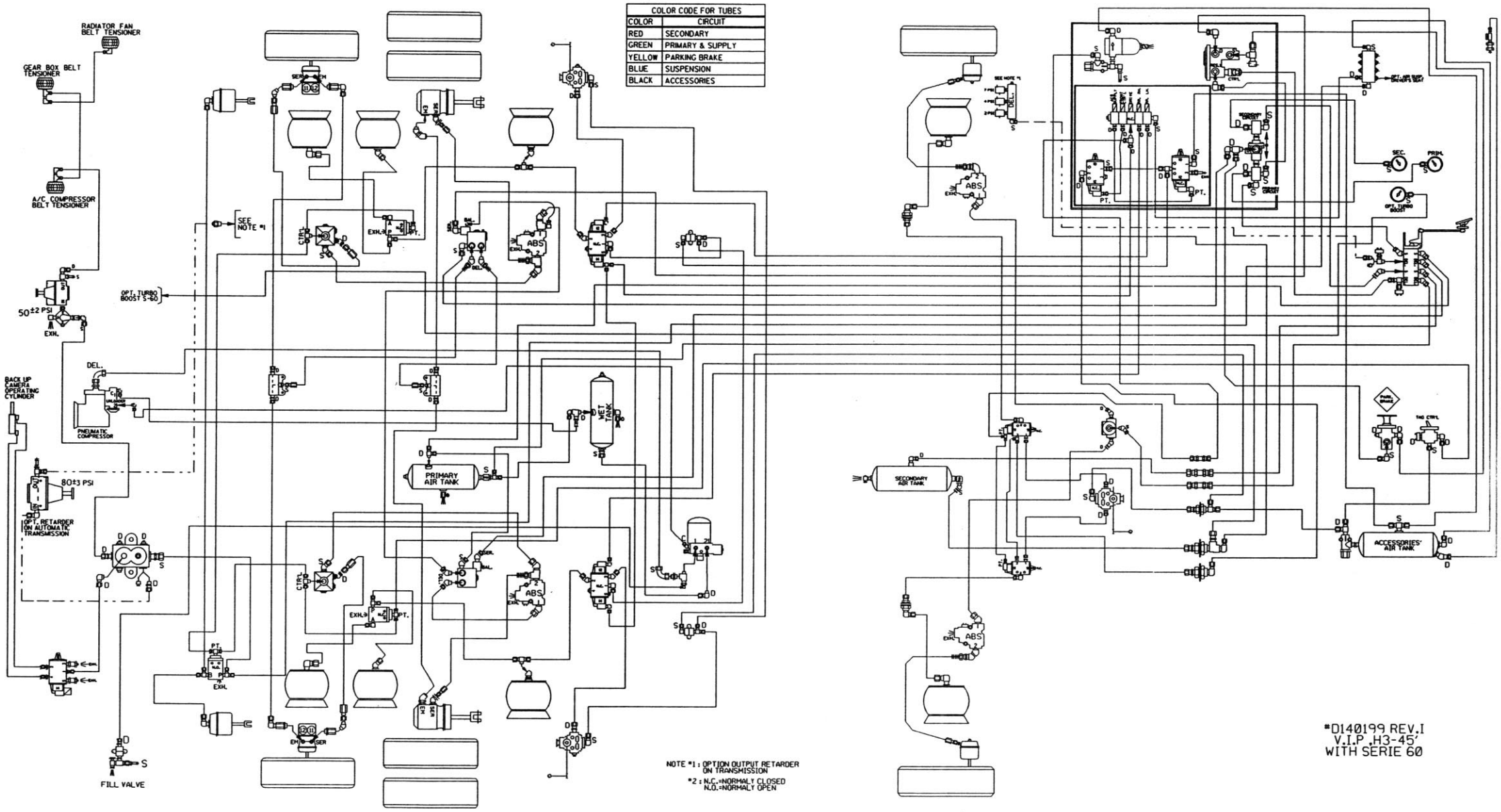

COLOR CODE FOR TUBES	
COLOR	CIRCUIT
RED	SECONDARY
GREEN	PRIMARY & SUPPLY
YELLOW	PARKING BRAKE
BLUE	SUSPENSION
BLACK	ACCESSORIES