Converter 24/24V USB

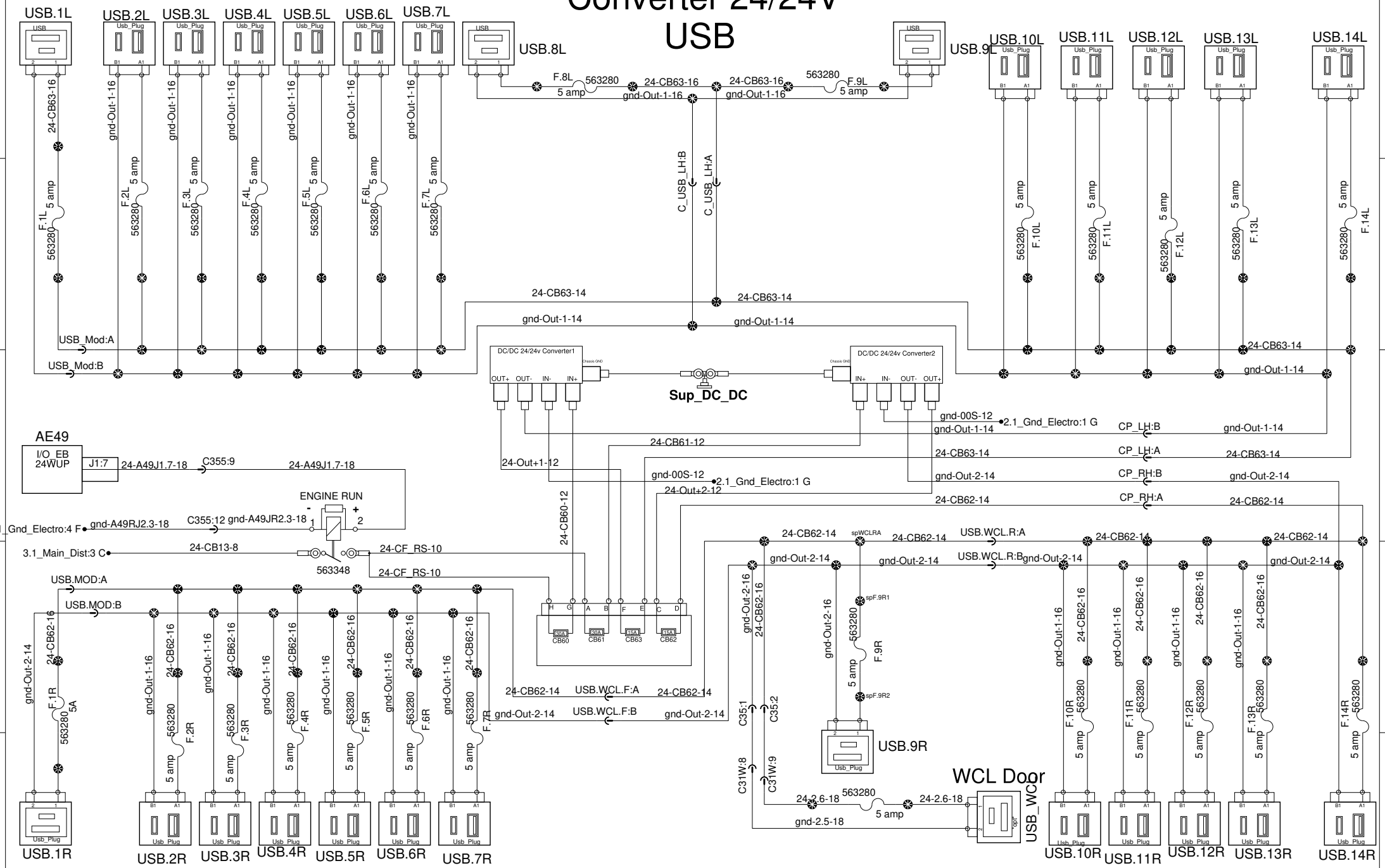

PREVOST®	WIRING DIAGRAM	No:D061780	Page:40.3	Rev:11