# Lavatory and No Smoking Sign

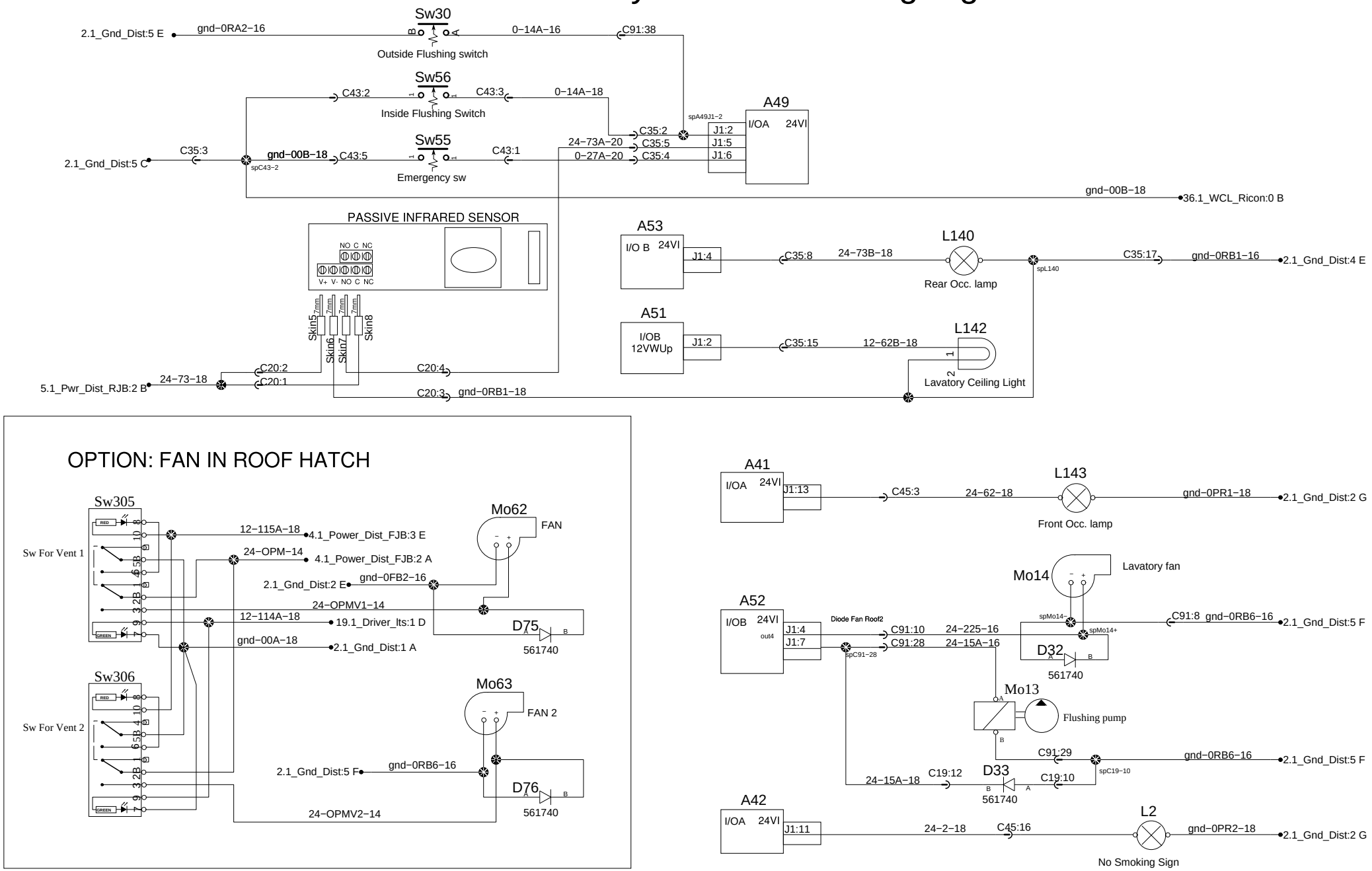


PREVOST®

WIRING DIAGRAM

No:D061020

Page:11.1 sp1

Rev:21