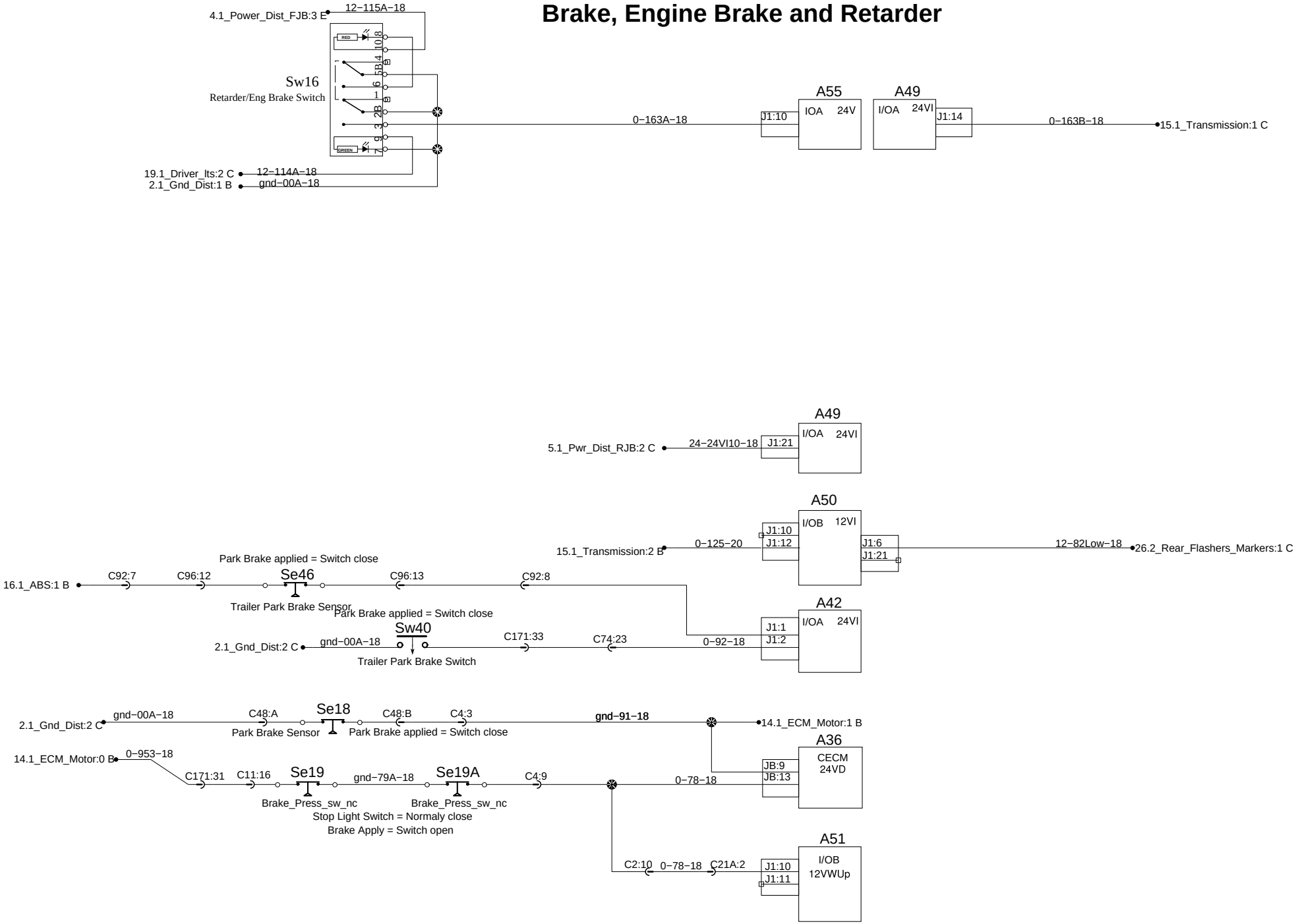Brake, Engine Brake and Retarder