Prime Pump, Water Filter,Ether and Fan Clutch

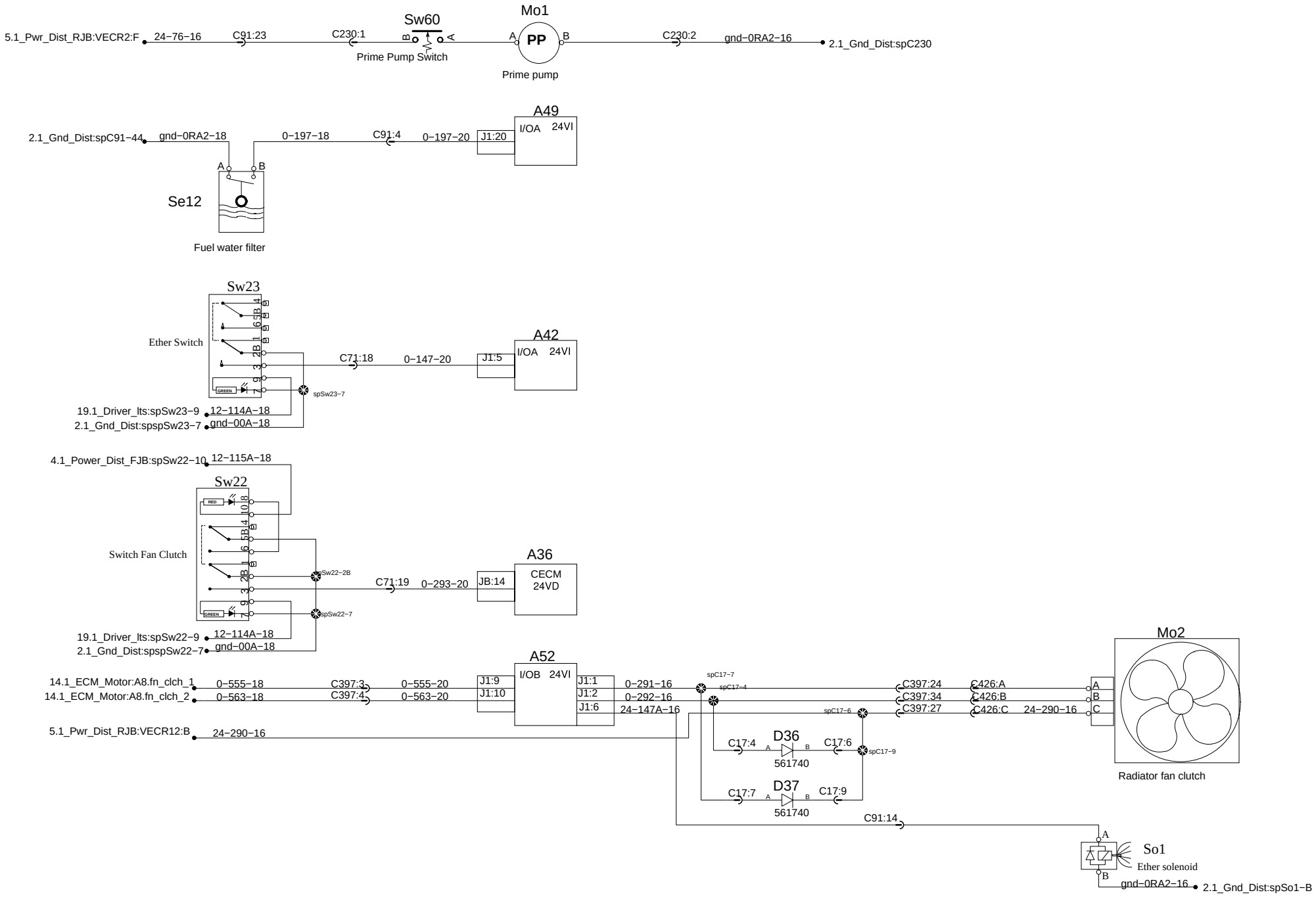

PREVOST	WIRING DIAGRAM	No:D061020	Page:13.1	Rev:1