Driver lights

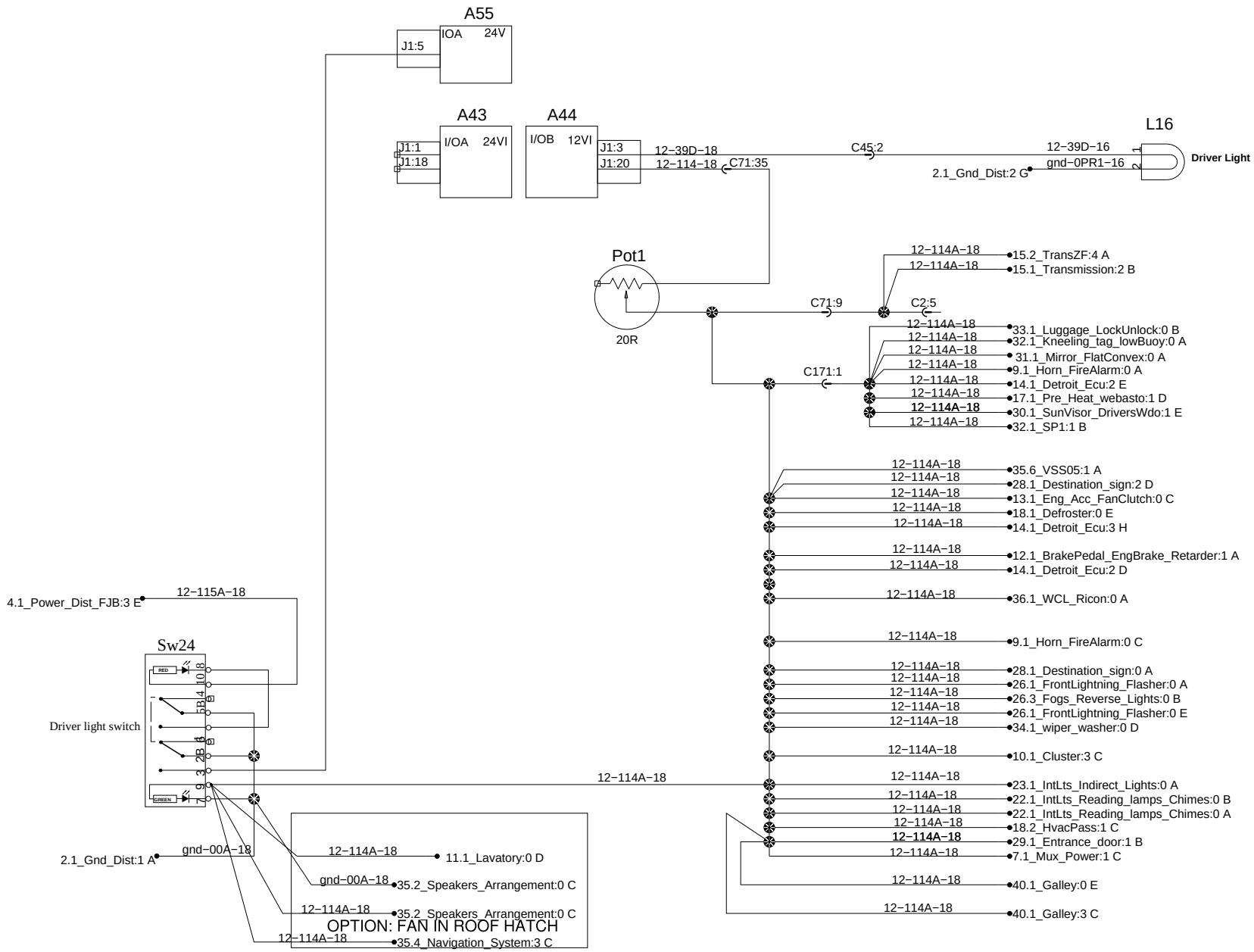

PREVOST®	WIRING DIAGRAM	No:D061020	Page:19.1	Rev:25