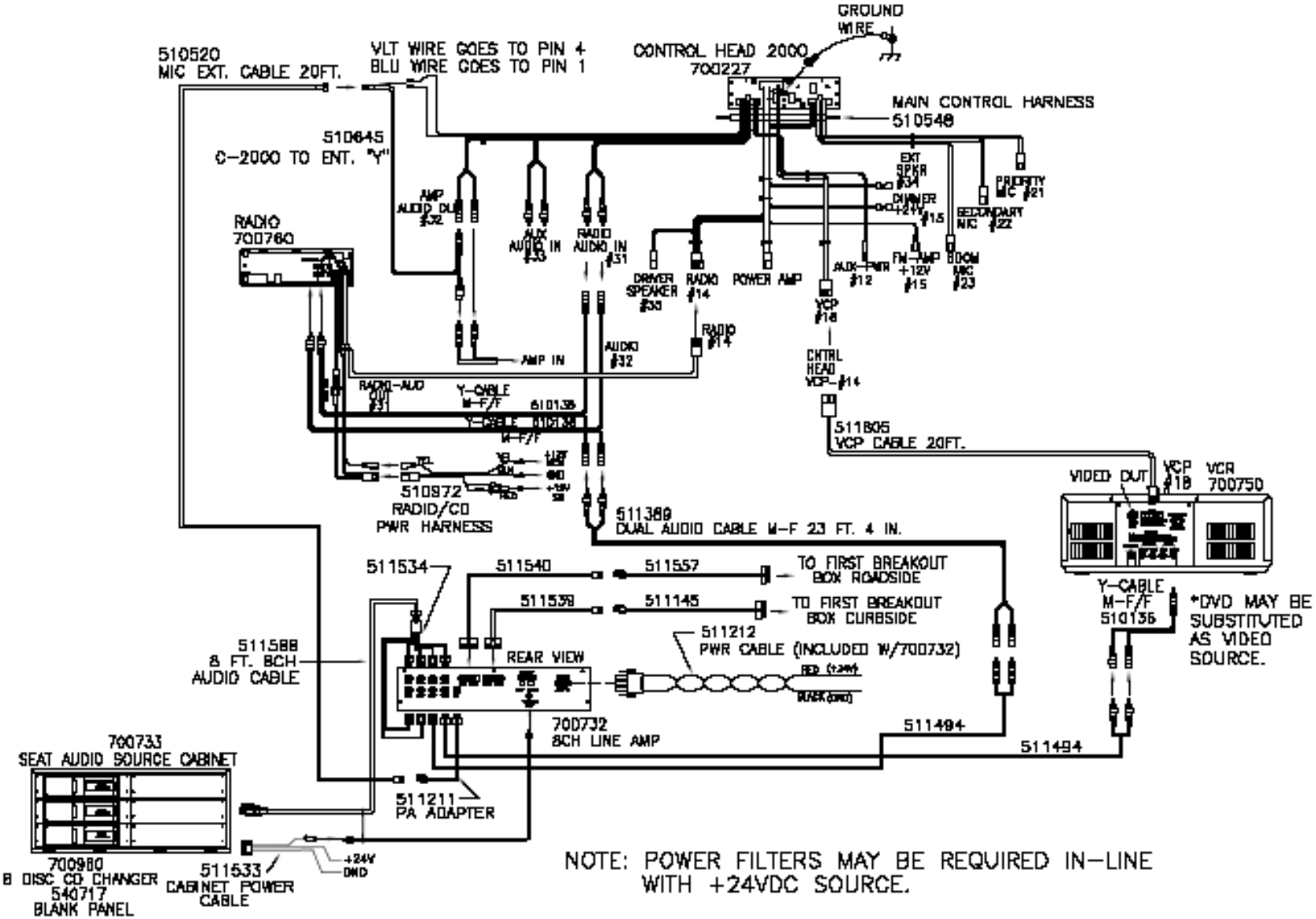SYSTEM 2000 DIGITAL SEAT AUDIO
8 CHANNEL SOURCE CONNECTIONS USING
8 CHANNEL LINE AMPLIFIER