NAVIGATION SYSTEM WITH BACKUP CAMERA

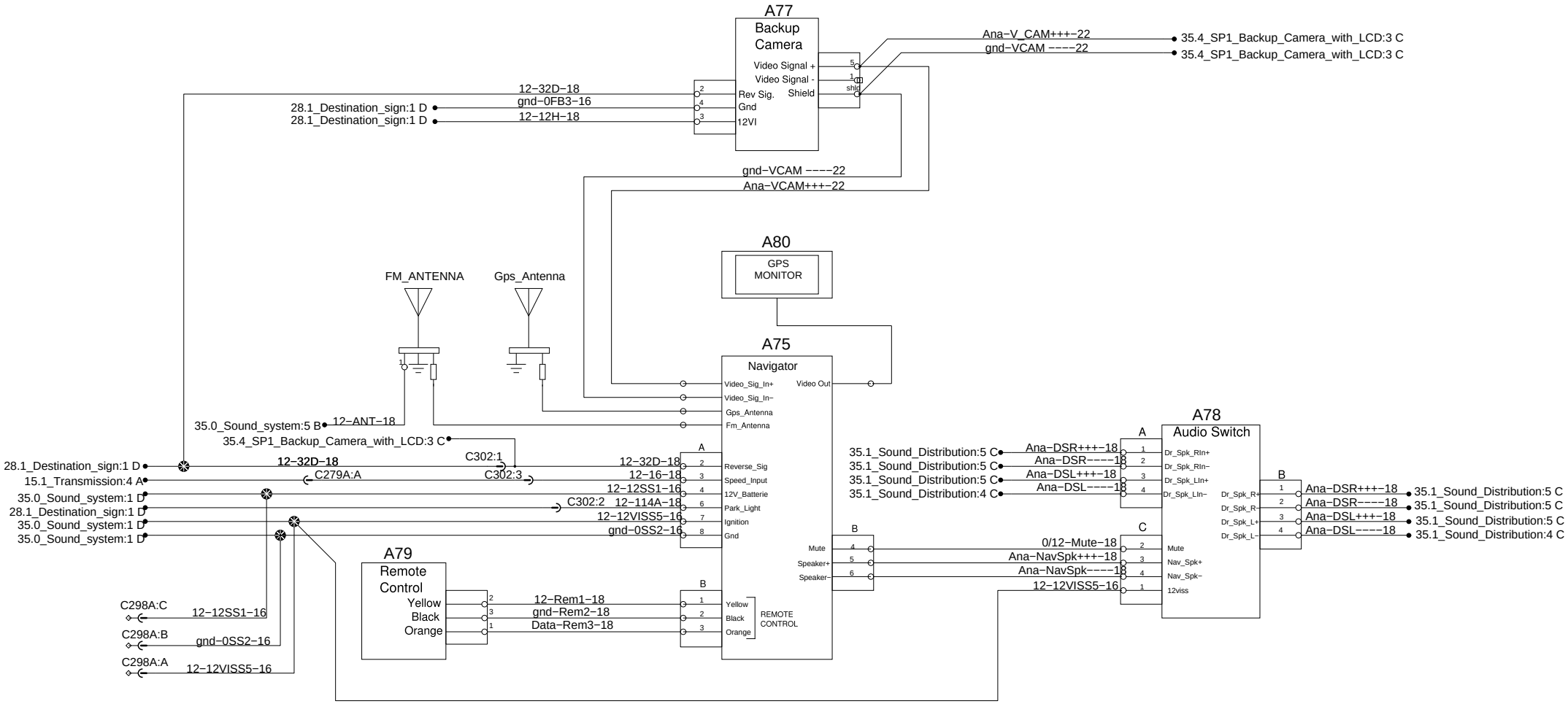

PREVOST®	WIRING DIAGRAM	No:D061020	Page:35.4	Rev:19