Fire Protection Extinguisher

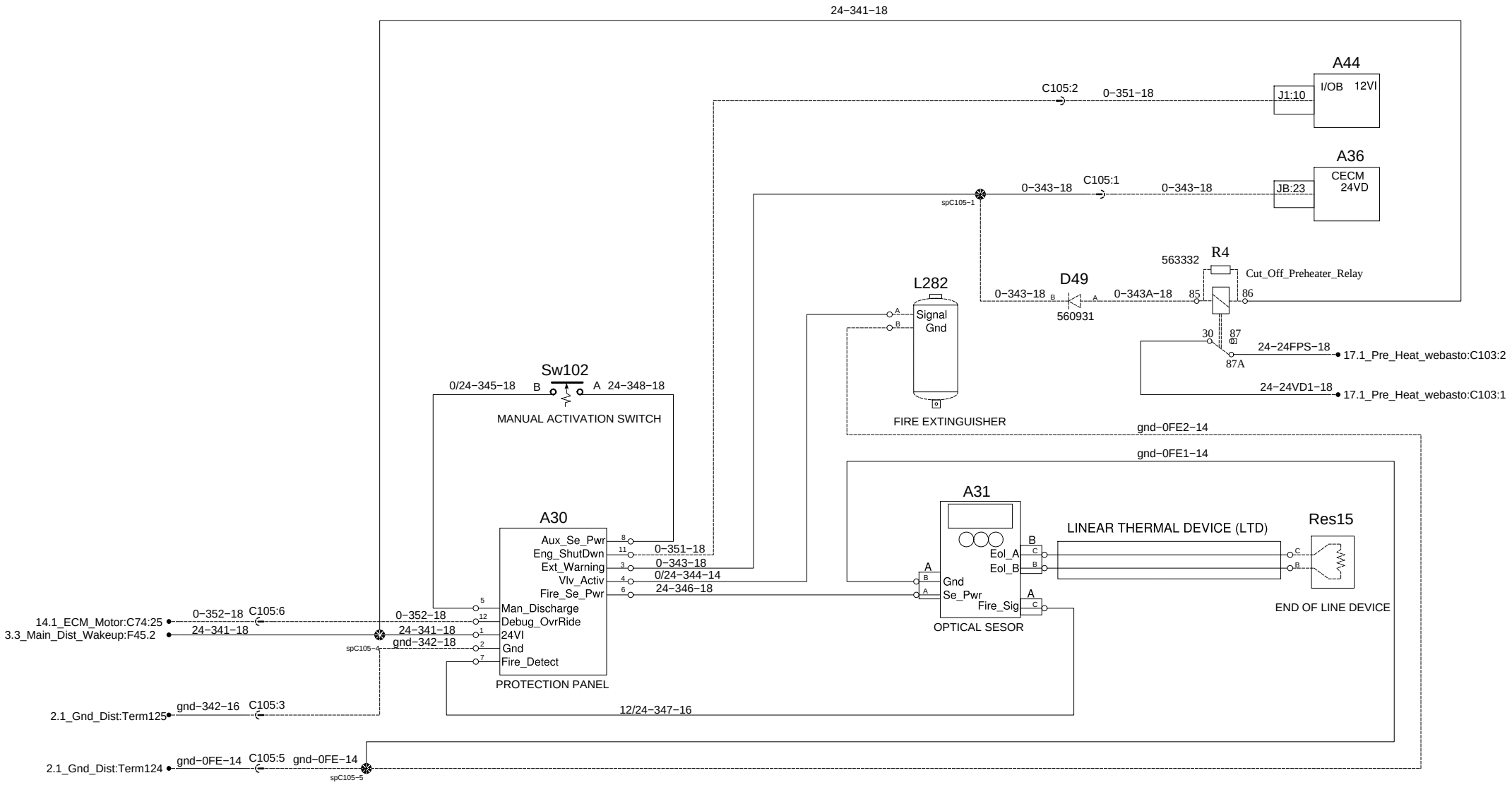

PREVOST®	WIRING DIAGRAM	No:D061020	Page:38.1	Rev:6