Spare Wires

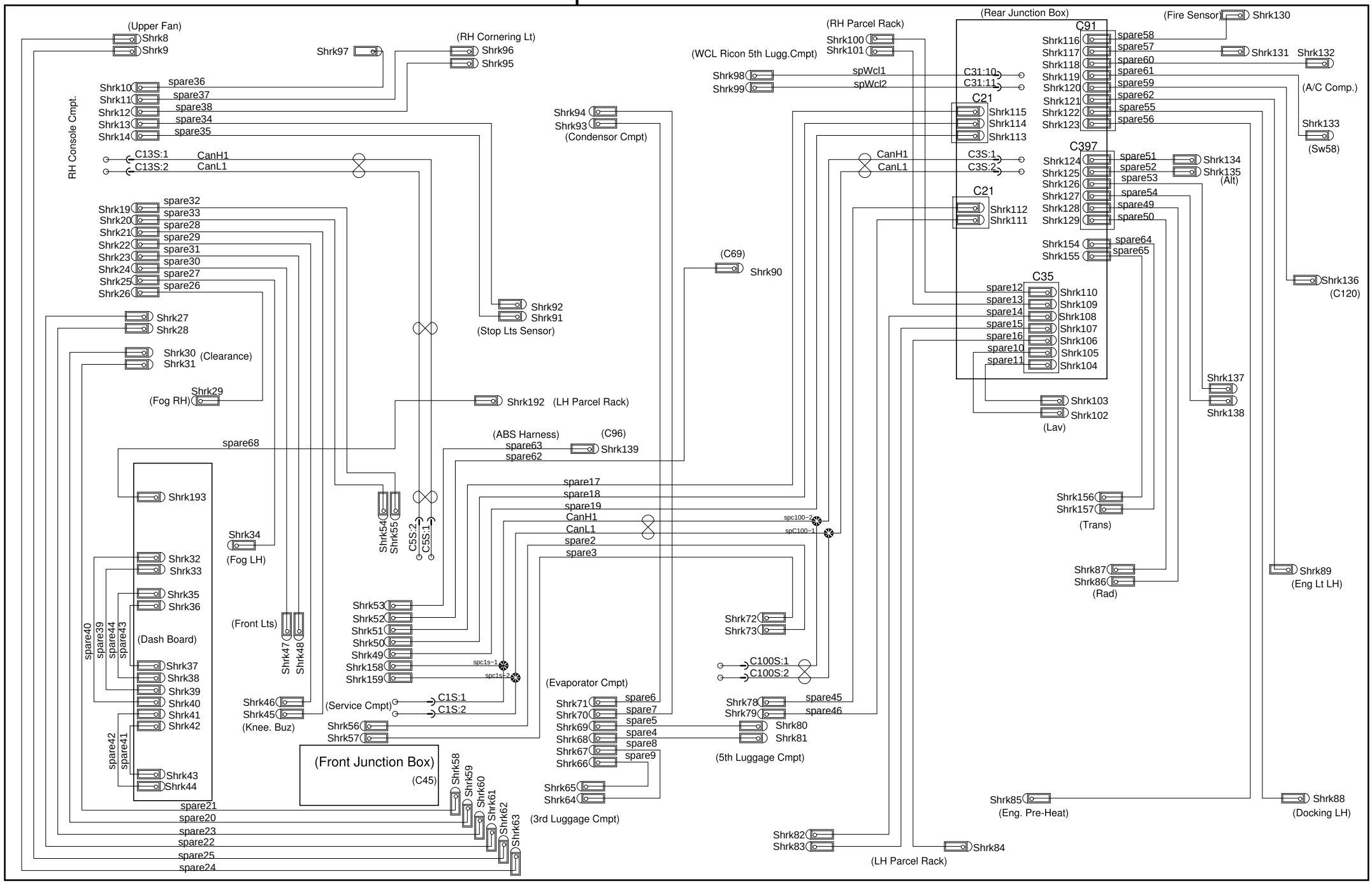
(Upper Fan)
Shrk8
Shrk9
Shrk97
(RH Cornering Lt)
Shrk96
Shrk95
RH Console Cmpt.
Shrk10
Shrk11
Shrk12
Shrk13
Shrk14
spare36
spare37
spare38
spare34
spare35
C13S:1
C13S:2
CanH1
CanL1
Shrk94
Shrk93
(Condensor Cmpt)
Shrk19
Shrk20
Shrk21
Shrk22
Shrk23
Shrk24
Shrk25
Shrk26
spare32
spare33
spare28
spare29
spare31
spare30
spare27
spare26
Shrk27
Shrk28
Shrk30
Shrk31
(Clearance)
Shrk29
(Fog RH)
Shrk92
Shrk91
(Stop Lts Sensor)
Shrk192
(LH Parcel Rack)
spare68
(ABS Harness)
spare63
spare62
(C96)
Shrk139
Shrk193
Shrk54
Shrk55
C5S:2
C5S:1
Shrk34
(Fog LH)
Shrk32
Shrk33
Shrk35
Shrk36
(Dash Board)
spare40
spare39
spare44
spare43
Shrk37
Shrk38
Shrk39
Shrk40
Shrk41
Shrk42
spare42
spare41
Shrk43
Shrk44
(Front Lts)
Shrk47
Shrk48
Shrk46
Shrk45
(Knee. Buz)
Shrk53
Shrk52
Shrk51
Shrk50
Shrk49
Shrk158
Shrk159
spc1s-1
spc1s-2
(Service Cmpt)
C1S:1
C1S:2
Shrk56
Shrk57
(Front Junction Box)
(C45)
Shrk58
Shrk59
Shrk60
Shrk61
Shrk62
Shrk63
spare21
spare20
spare23
spare22
spare25
spare24
spare17
spare18
spare19
CanH1
CanL1
spare2
spare3
spc100-2
spC100-1
Shrk72
Shrk73
C100S:1
C100S:2
(Evaporator Cmpt)
Shrk71
Shrk70
Shrk69
Shrk68
Shrk67
Shrk66
spare6
spare7
spare5
spare4
spare8
spare9
Shrk65
Shrk64
(3rd Luggage Cmpt)
Shrk78
Shrk79
spare45
spare46
Shrk80
Shrk81
(5th Luggage Cmpt)
Shrk82
Shrk83
Shrk84
(LH Parcel Rack)
(C69)
Shrk90
(RH Parcel Rack)
Shrk100
Shrk101
(WCL Ricon 5th Lugg.Cmpt)
Shrk98
Shrk99
spWcl1
spWcl2
(Rear Junction Box)
C91
C31:10
C31:11
C21
Shrk115
Shrk114
Shrk113
C3S:1
C3S:2
C397
C21
Shrk112
Shrk111
C35
spare12
spare13
spare14
spare15
spare16
spare10
spare11
Shrk110
Shrk109
Shrk108
Shrk107
Shrk106
Shrk105
Shrk104
Shrk116
Shrk117
Shrk118
Shrk119
Shrk120
Shrk121
Shrk122
Shrk123
spare58
spare57
spare60
spare61
spare59
spare62
spare55
spare56
Shrk124
Shrk125
Shrk126
Shrk127
Shrk128
Shrk129
spare51
spare52
spare53
spare54
spare49
spare50
Shrk154
Shrk155
spare64
spare65
Shrk103
Shrk102
(Lav)
Shrk156
Shrk157
(Trans)
Shrk87
Shrk86
(Rad)
(Fire Sensor)
Shrk130
Shrk131
Shrk132
(A/C Comp.)
Shrk133
(Sw58)
Shrk134
Shrk135
(Alt)
Shrk137
Shrk138
Shrk136
(C120)
Shrk89
(Eng Lt LH)
Shrk85
(Eng. Pre-Heat)
Shrk88
(Docking LH)