Brake, Engine Brake and Retarder

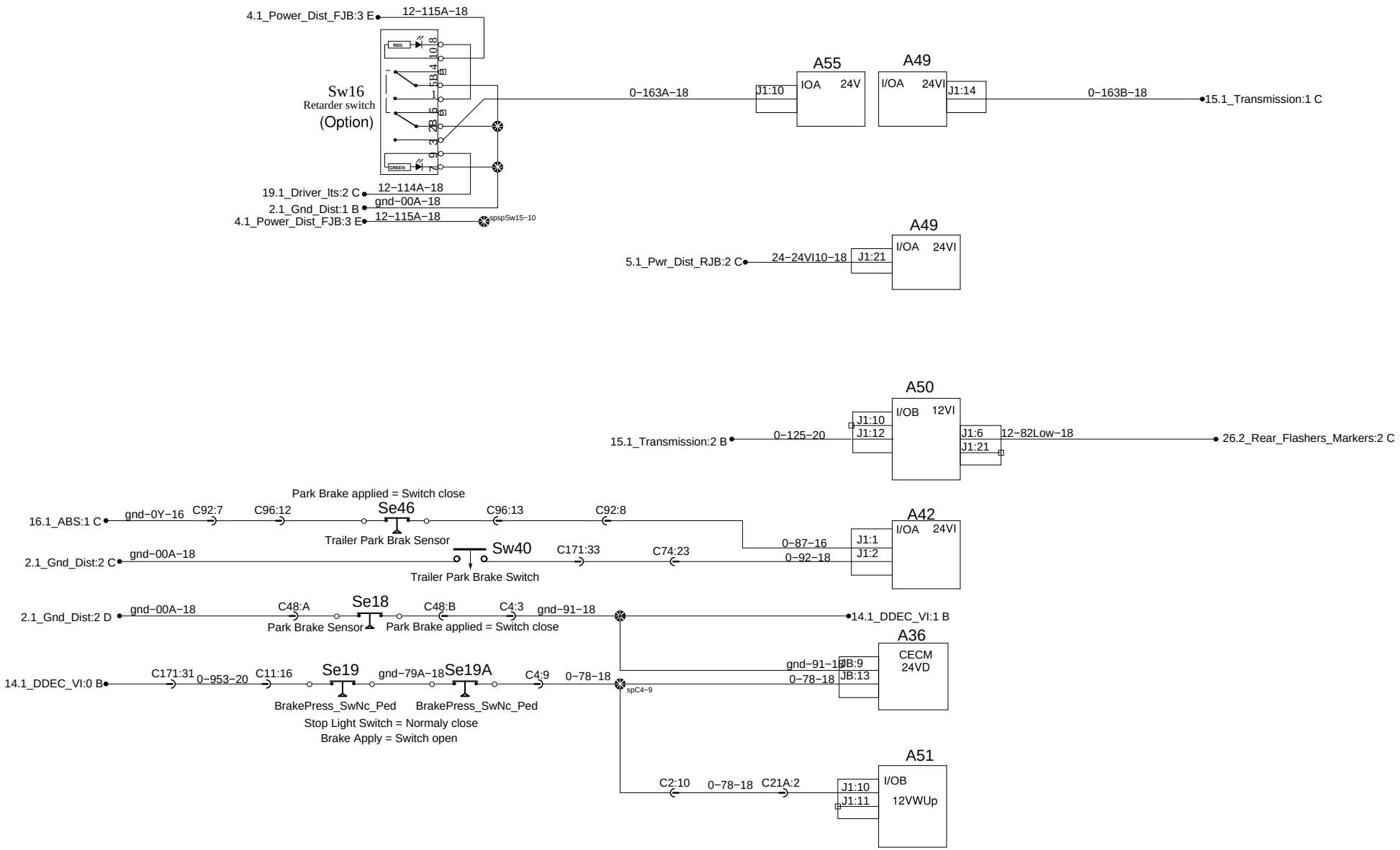

PREVOST®	WIRING DIAGRAM	No:D061030	Page:12.1	Rev:18