# ABS System

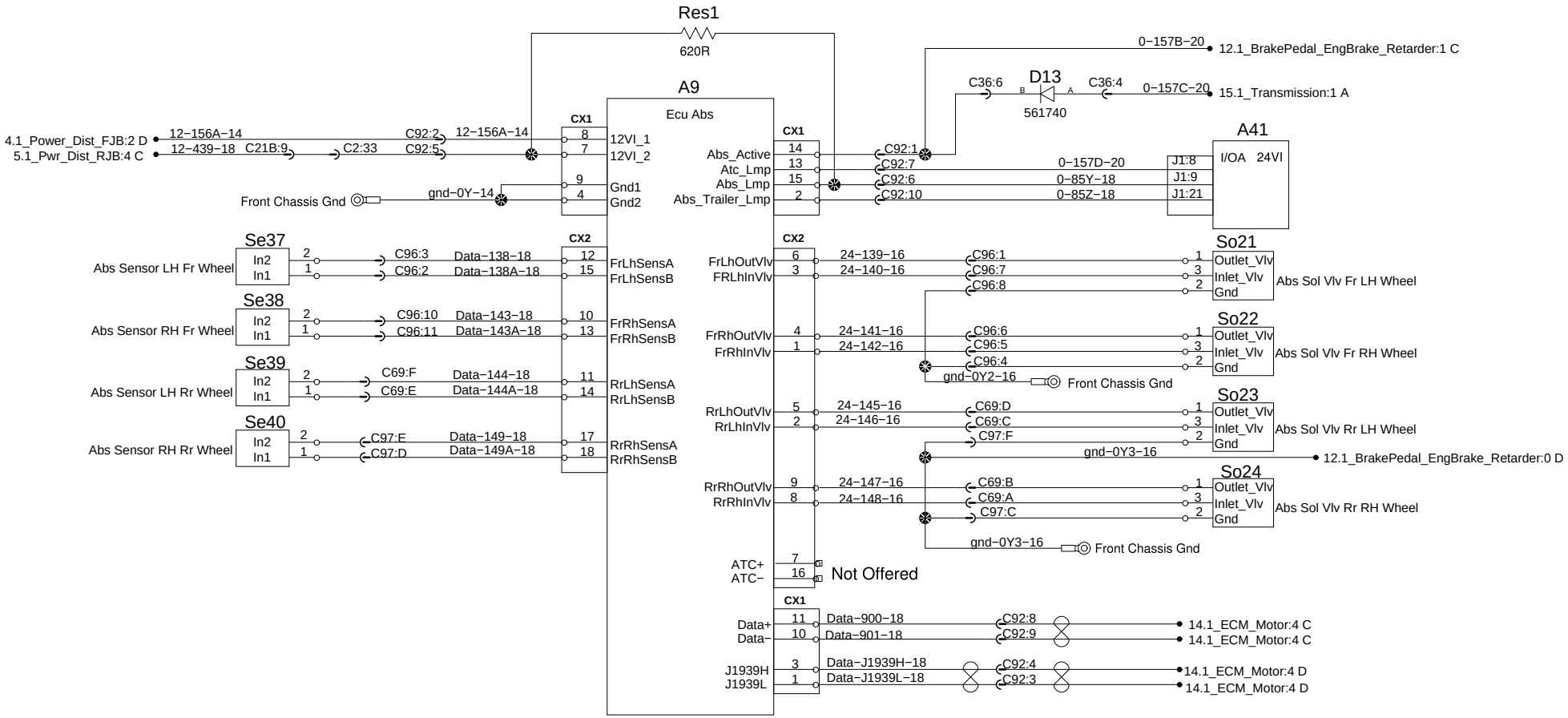
Res1
620R
A9
Ecu Abs
CX1
CX2
4.1_Power_Dist_FJB:2 D
5.1_Pwr_Dist_RJB:4 C
12−156A−14
12−439−18
C21B:9
C2:33
C92:2
C92:5
12−156A−14
12VI_1
12VI_2
Gnd1
Gnd2
Front Chassis Gnd
gnd−0Y−14
Abs_Active
Atc_Lmp
Abs_Lmp
Abs_Trailer_Lmp
C92:1
C92:7
C92:6
C92:10
0−157B−20
12.1_BrakePedal_EngBrake_Retarder:1 C
C36:6
D13
561740
C36:4
0−157C−20
15.1_Transmission:1 A
A41
I/OA 24VI
0−157D−20
0−85Y−18
0−85Z−18
J1:8
J1:9
J1:21
Se37
Abs Sensor LH Fr Wheel
In2
In1
C96:3
C96:2
Data−138−18
Data−138A−18
FrLhSensA
FrLhSensB
Se38
Abs Sensor RH Fr Wheel
C96:10
C96:11
Data−143−18
Data−143A−18
FrRhSensA
FrRhSensB
Se39
Abs Sensor LH Rr Wheel
C69:F
C69:E
Data−144−18
Data−144A−18
RrLhSensA
RrLhSensB
Se40
Abs Sensor RH Rr Wheel
C97:E
C97:D
Data−149−18
Data−149A−18
RrRhSensA
RrRhSensB
FrLhOutVlv
FRLhInVlv
24−139−16
24−140−16
C96:1
C96:7
C96:8
So21
Outlet_Vlv
Inlet_Vlv
Gnd
Abs Sol Vlv Fr LH Wheel
FrRhOutVlv
FrRhInVlv
24−141−16
24−142−16
C96:6
C96:5
C96:4
So22
Abs Sol Vlv Fr RH Wheel
gnd−0Y2−16
Front Chassis Gnd
RrLhOutVlv
RrLhInVlv
24−145−16
24−146−16
C69:D
C69:C
C97:F
So23
Abs Sol Vlv Rr LH Wheel
gnd−0Y3−16
12.1_BrakePedal_EngBrake_Retarder:0 D
RrRhOutVlv
RrRhInVlv
24−147−16
24−148−16
C69:B
C69:A
C97:C
So24
Abs Sol Vlv Rr RH Wheel
gnd−0Y3−16
Front Chassis Gnd
ATC+
ATC−
Not Offered
Data+
Data−
Data−900−18
Data−901−18
C92:8
C92:9
14.1_ECM_Motor:4 C
14.1_ECM_Motor:4 C
J1939H
J1939L
Data−J1939H−18
Data−J1939L−18
C92:4
C92:3
14.1_ECM_Motor:4 D
14.1_ECM_Motor:4 D