Entrance door

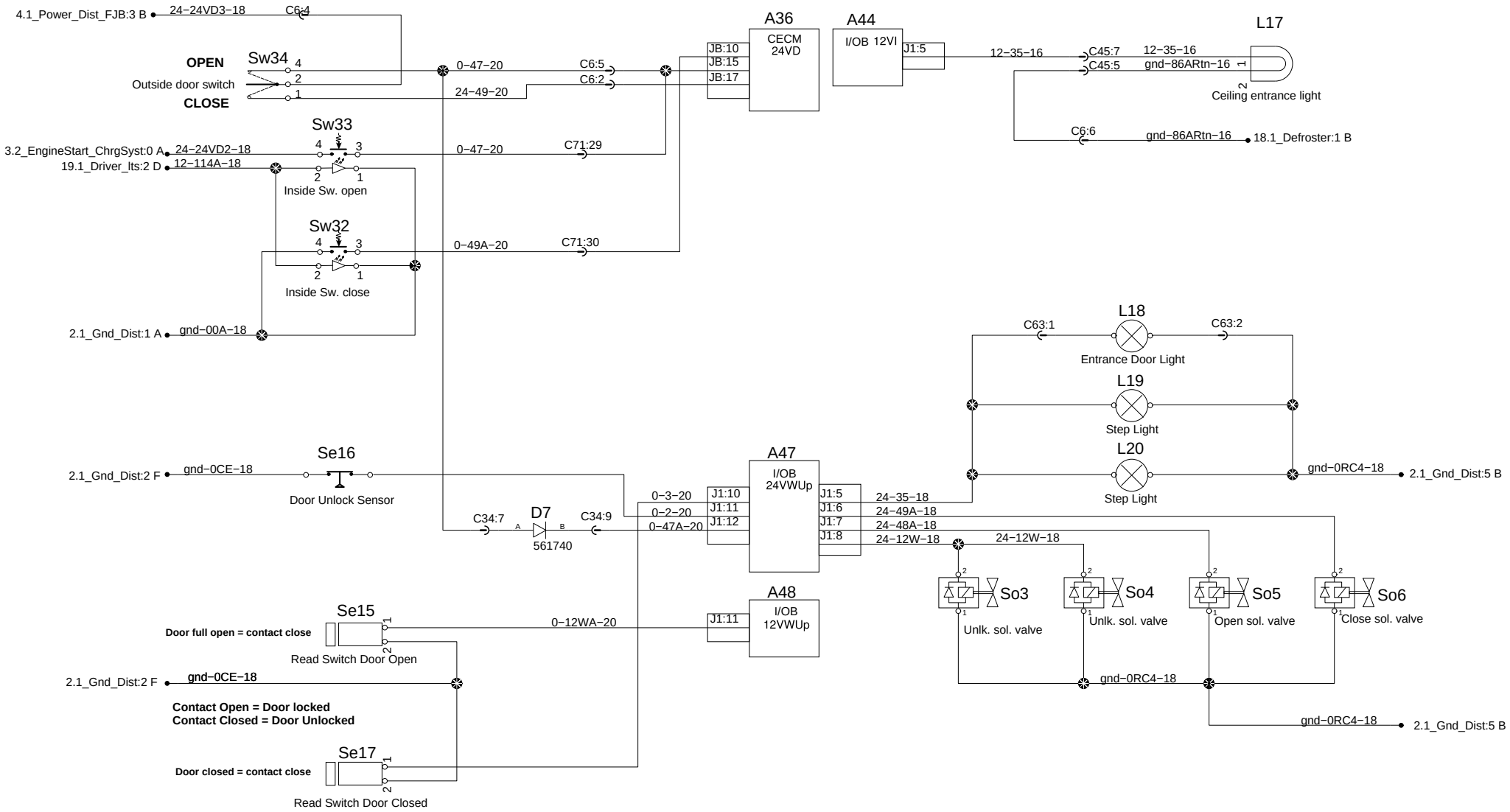

PREVOST®	WIRING DIAGRAM	No:D061030	Page:29.1	Rev:08