Wiper and washer

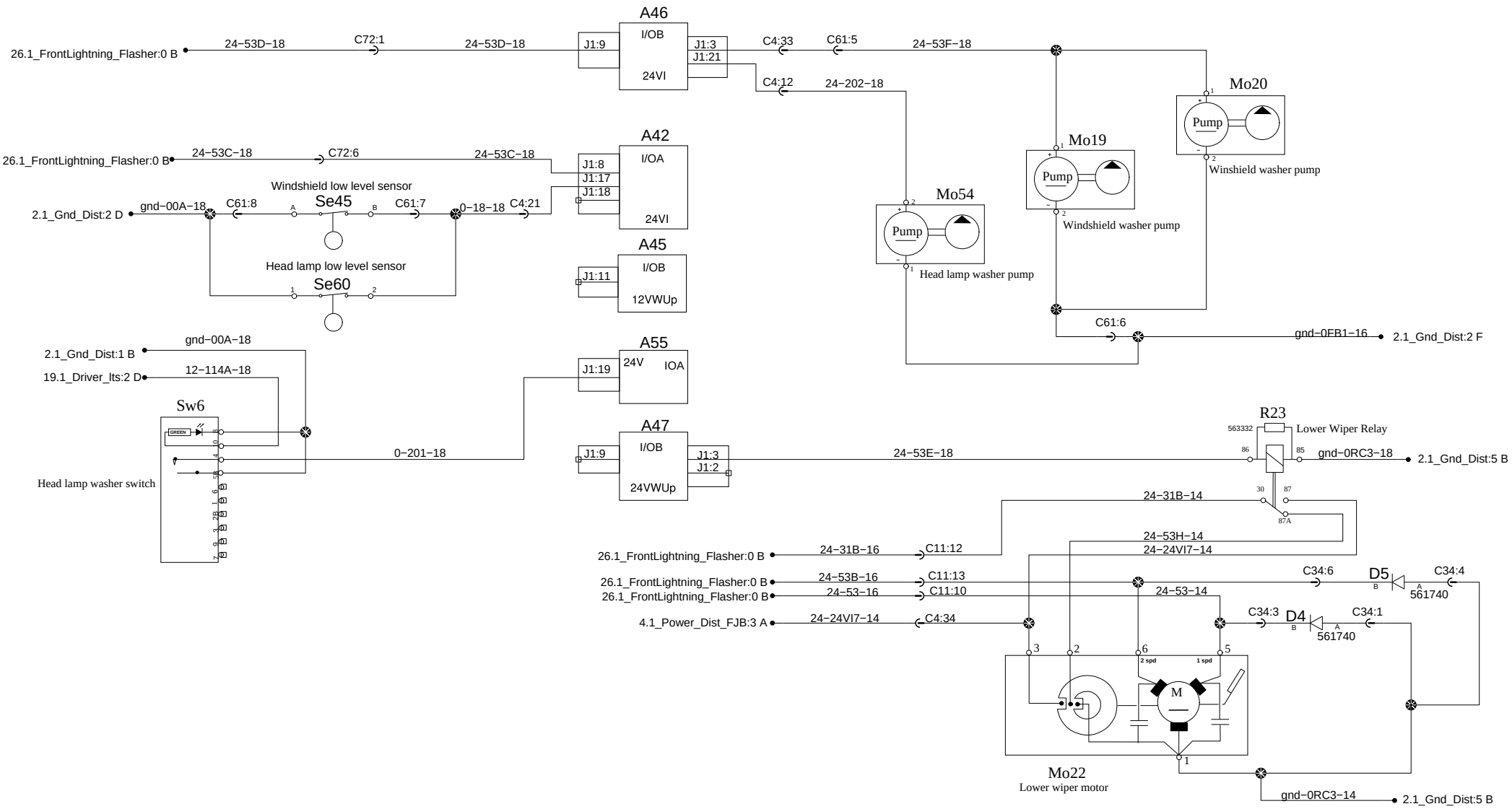

PREVOST®	WIRING DIAGRAM	No:D061030	Page:34.1	Rev:18