Entrance door,Keyless

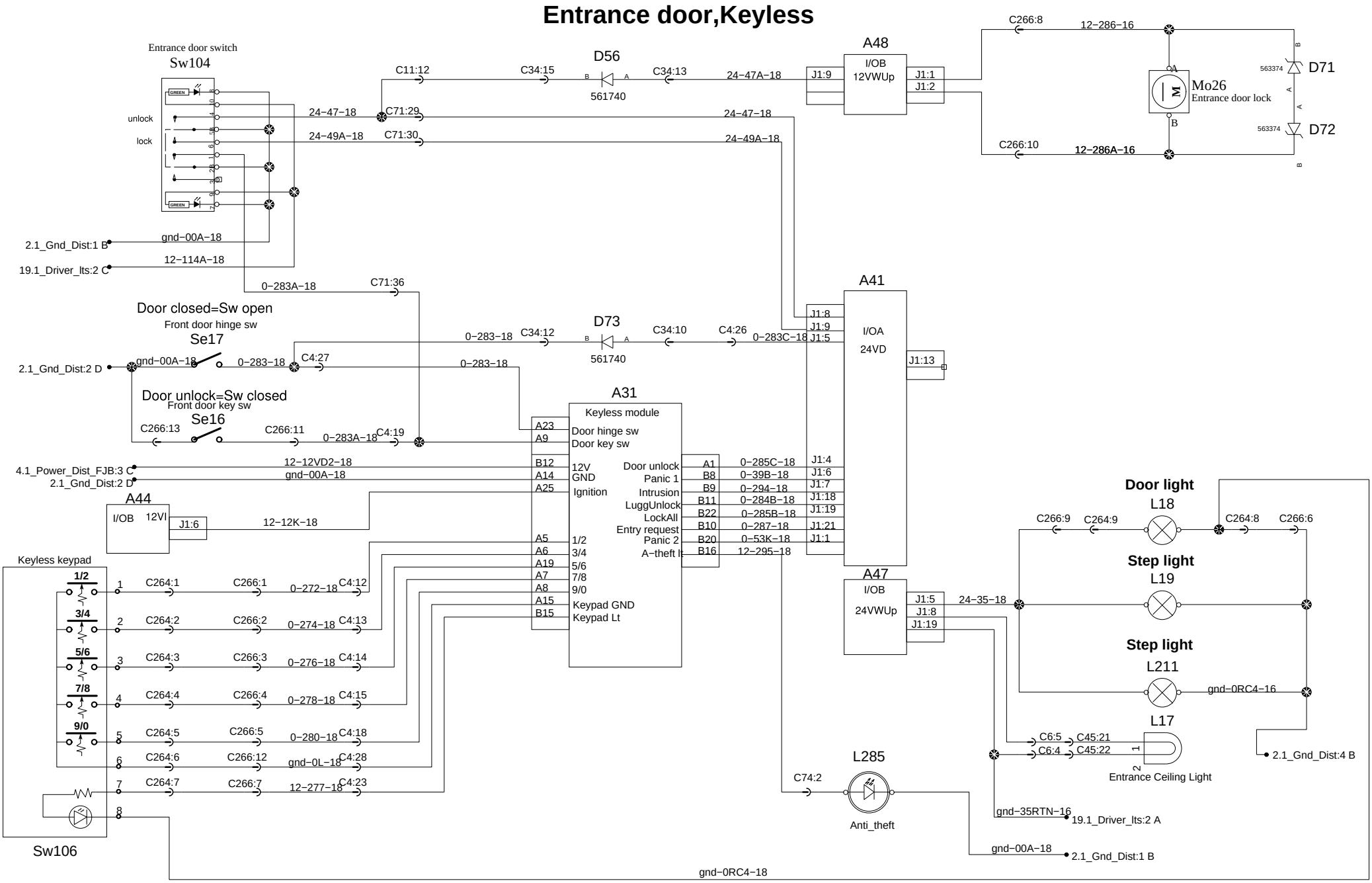

PREVOST®	WIRING DIAGRAM	No:D061040	Page:29.1	Rev:11