# Multiplex Power Supply Distribution

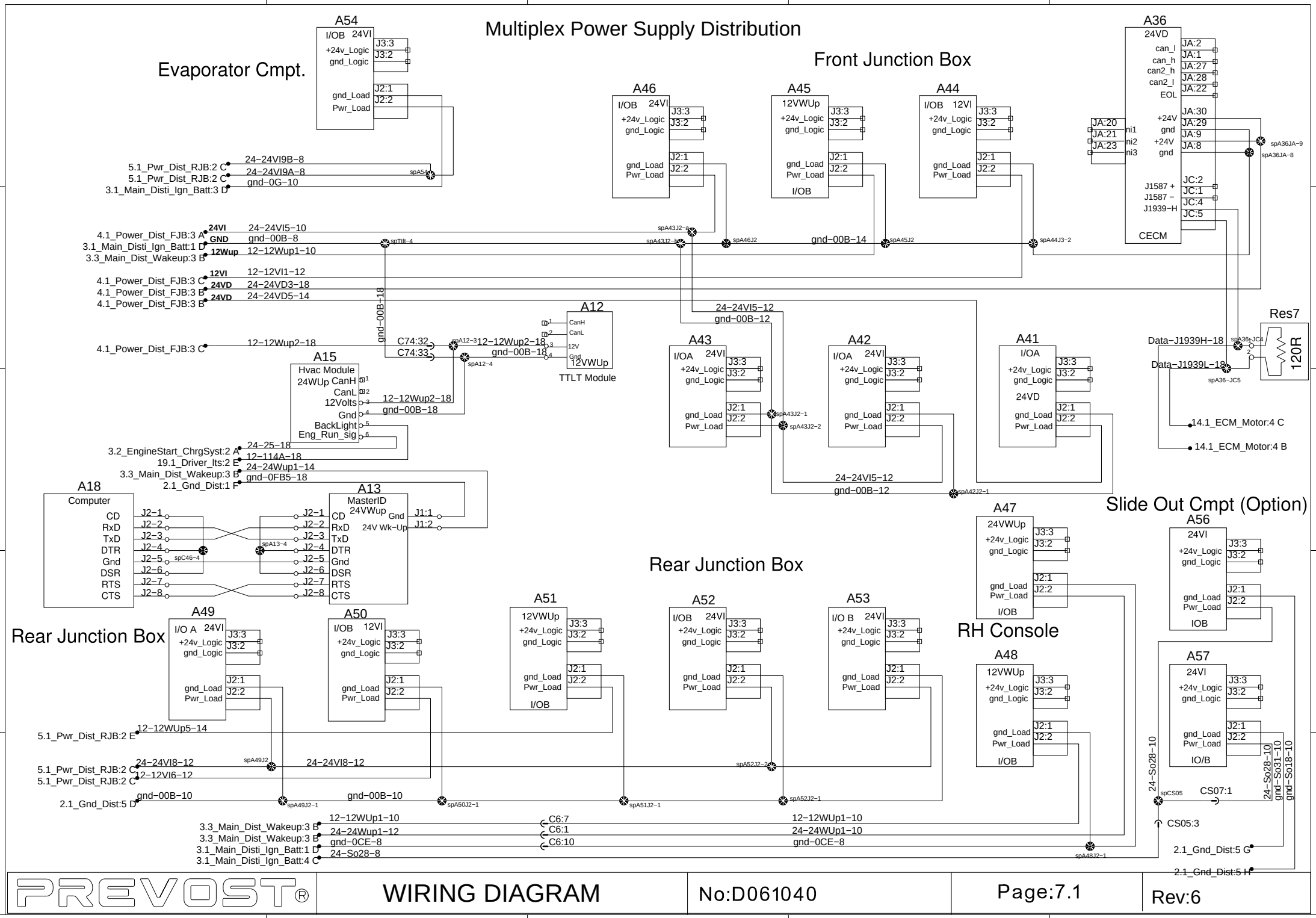


PREVOST®

WIRING DIAGRAM

No:D061040

Page:7.1

Rev:6