Horns, Fire Alarm and Test Switch

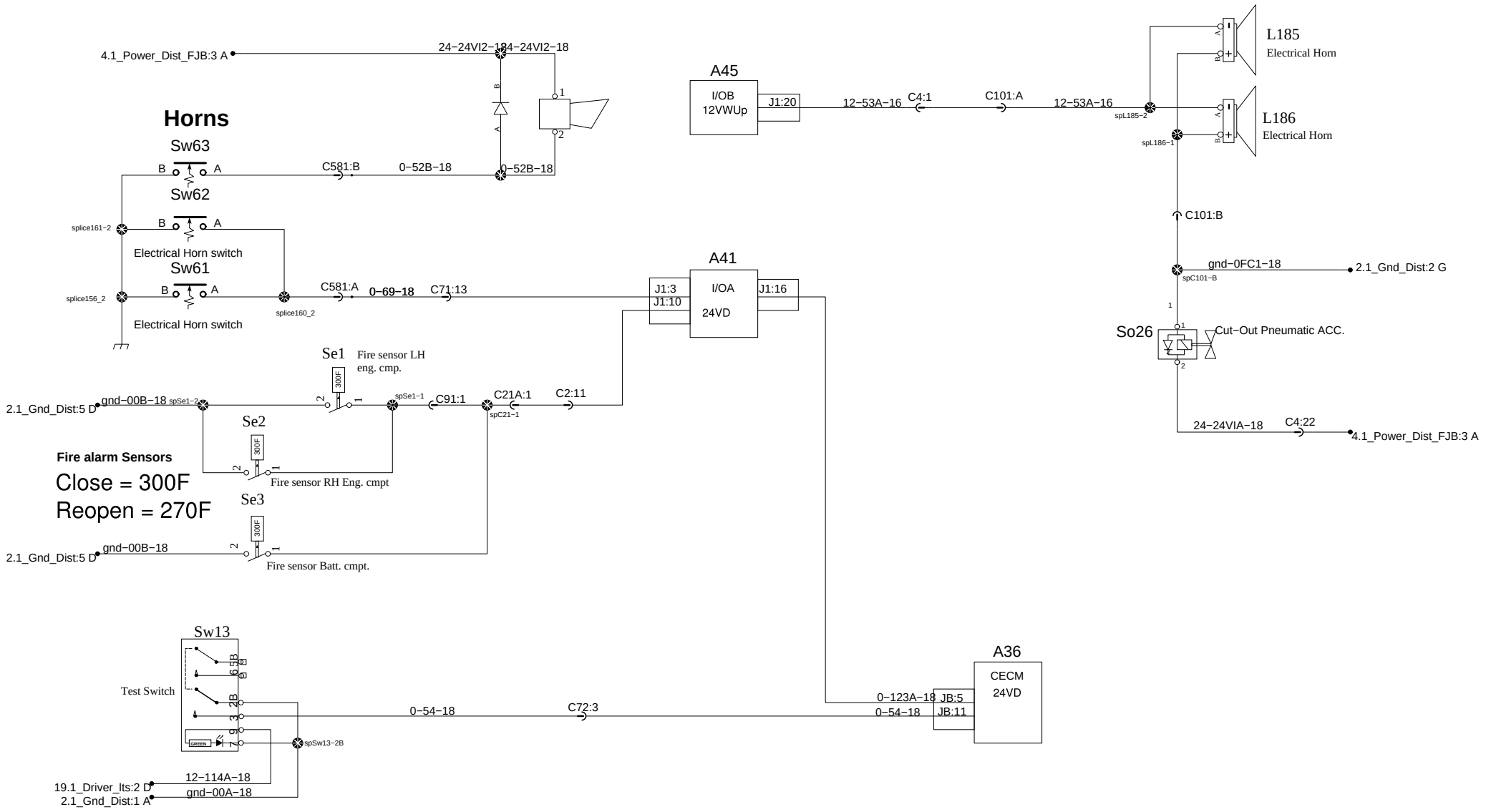

PREVOST®	WIRING DIAGRAM	No:D061040	Page:9.1 SP1	Rev:0