Driver lights

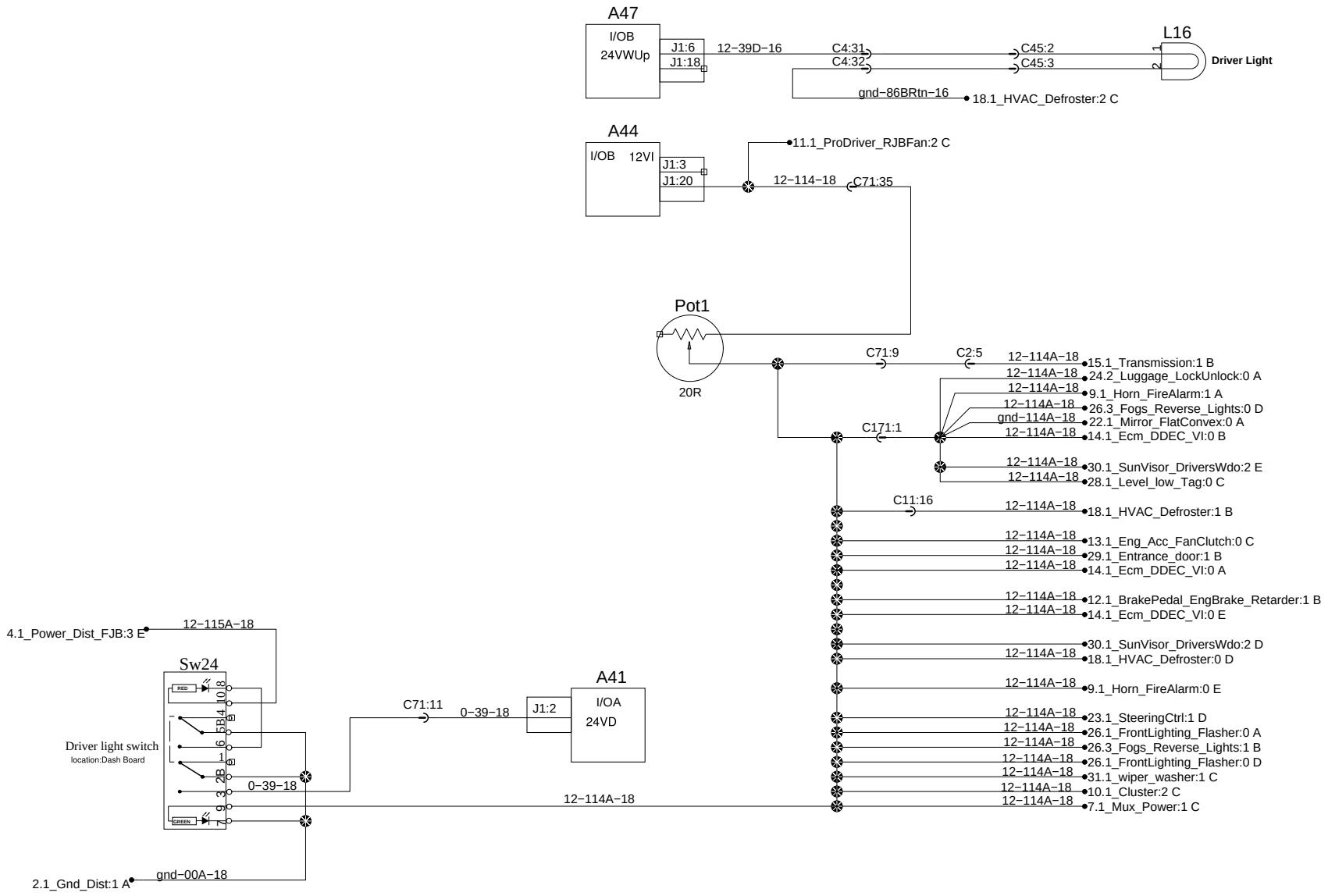

PREVOST®	WIRING DIAGRAM	No:D061080	Page:19.1	Rev:07