Lavatory and No Smoking Sign

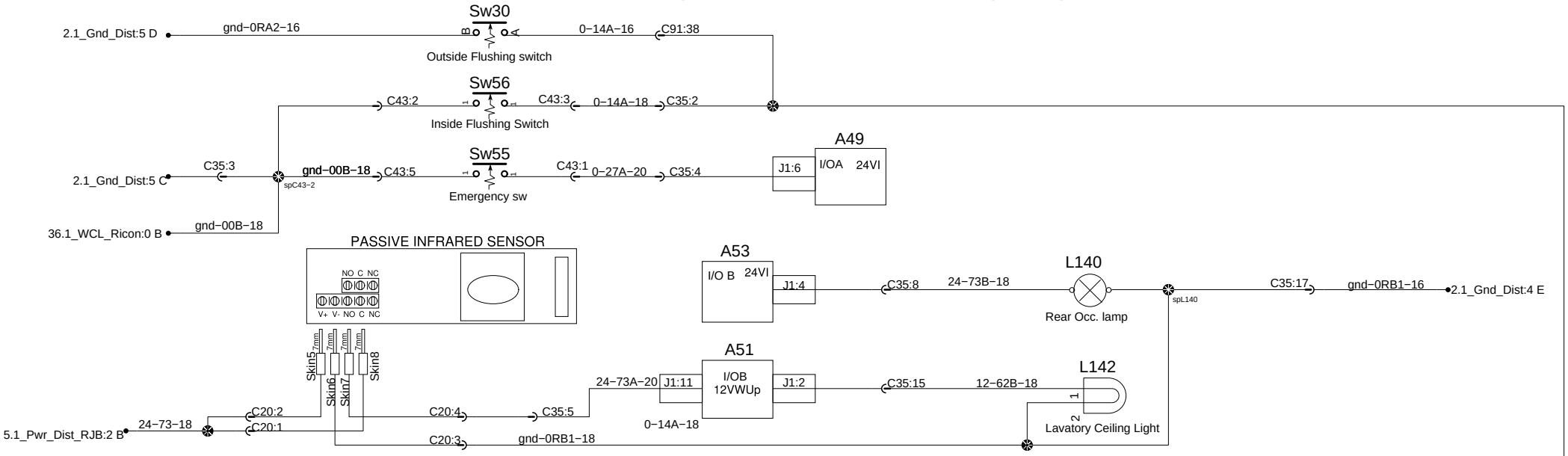

OPTION: FAN IN ROOF HATCH

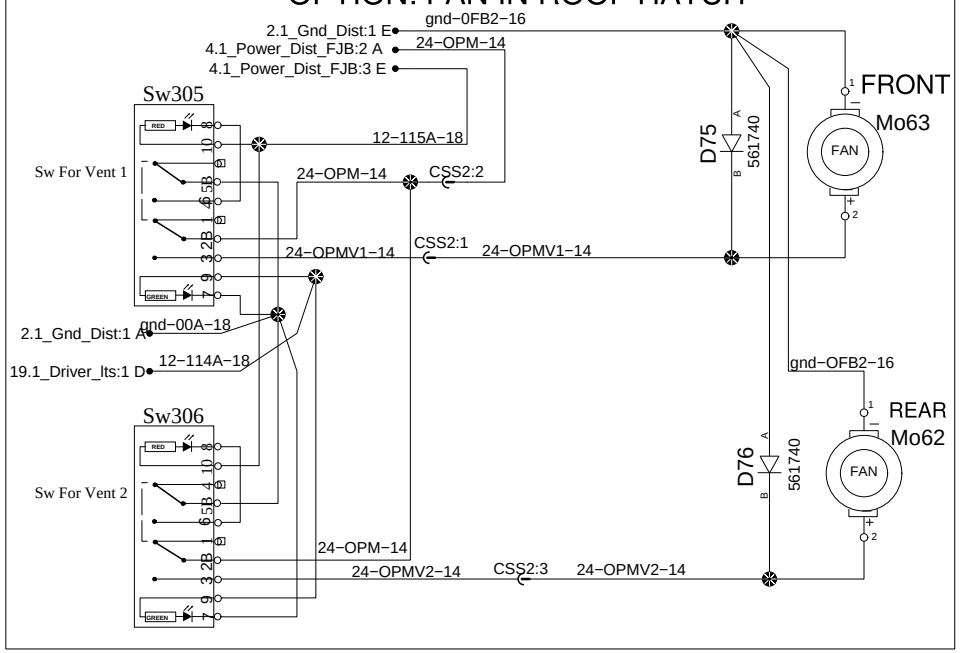

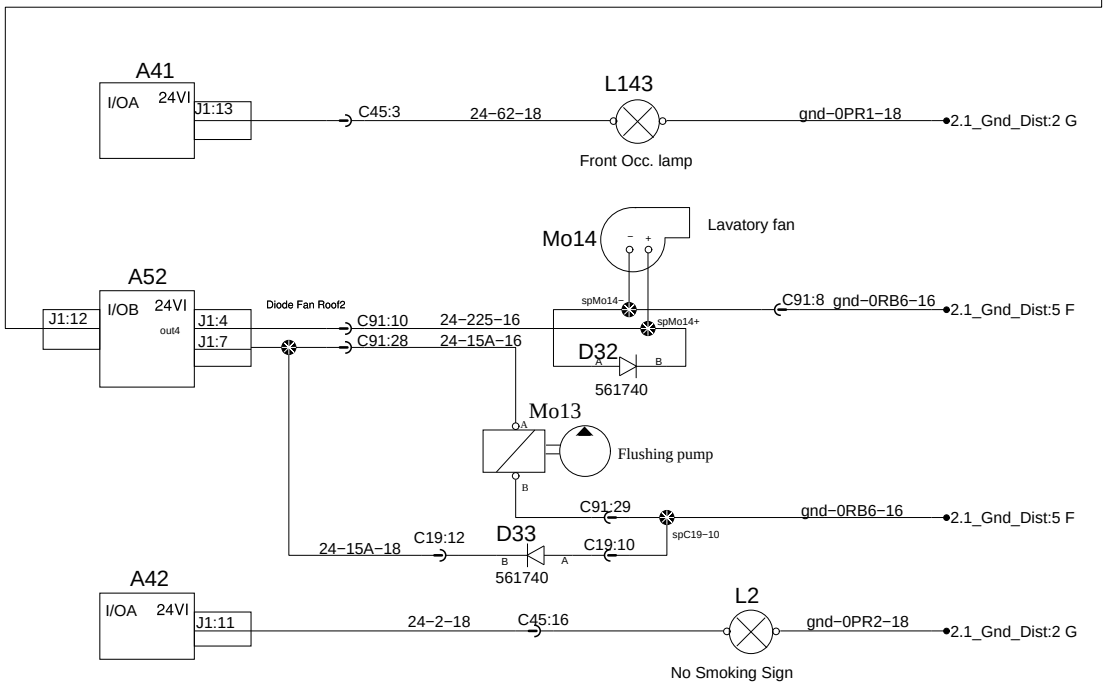

PREVOST®	WIRING DIAGRAM	No:D061140	Page:11.1	Rev:0