Luggage Compartment and Engine cmpt. lightning

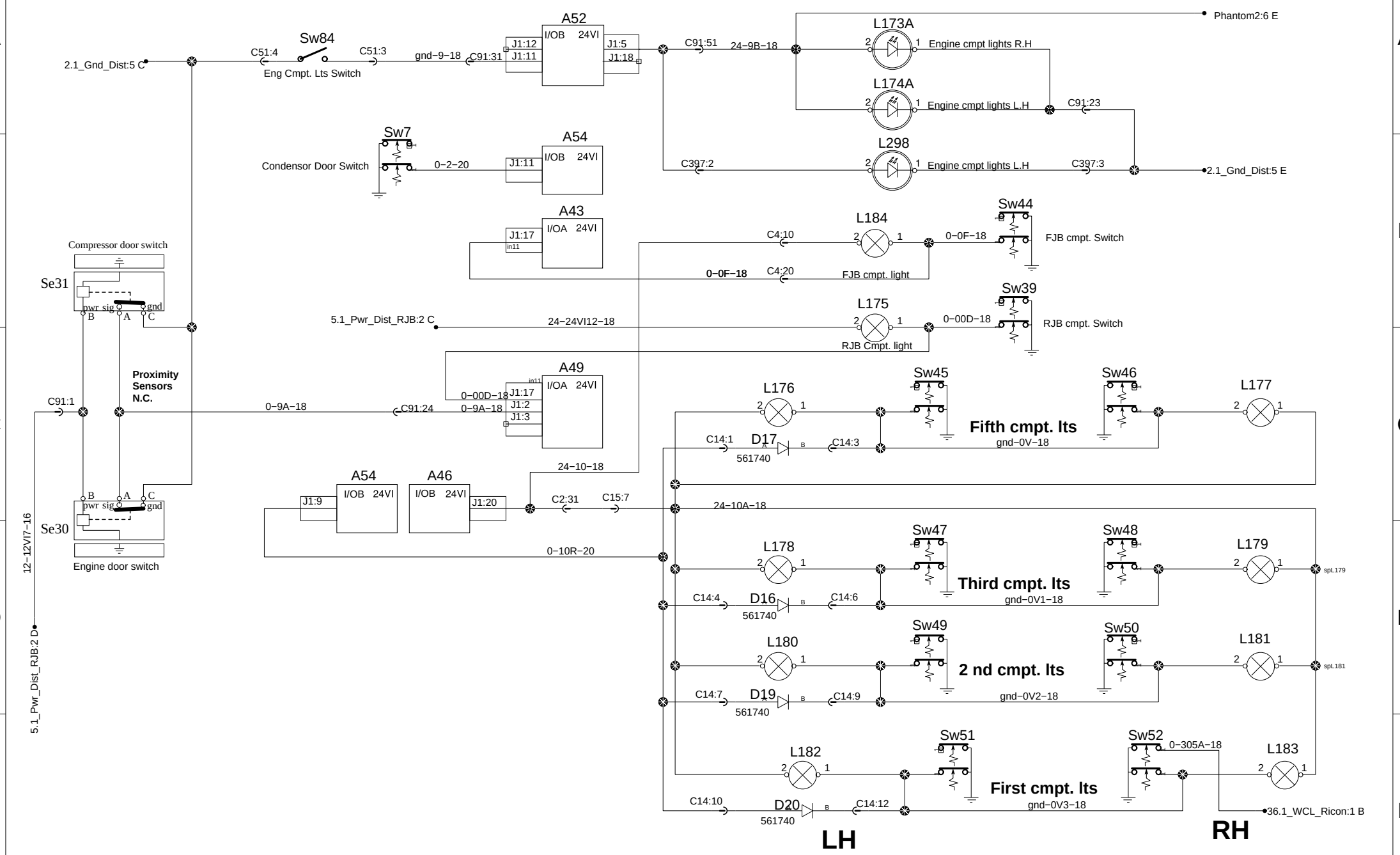

PREVOST®	WIRING DIAGRAM	No:D061140	Page:25.1	Rev:0