CAN NETWORKS LAYOUT

BBUS(DL0) — I/O Modules
J1939(DL7) — Engine Transmission
DBUS(DL3) — HVAC Instument cluster Guages
J1587(900-901) — ABS ENGINE
J1939(DL1) — Engine ACM Transmission

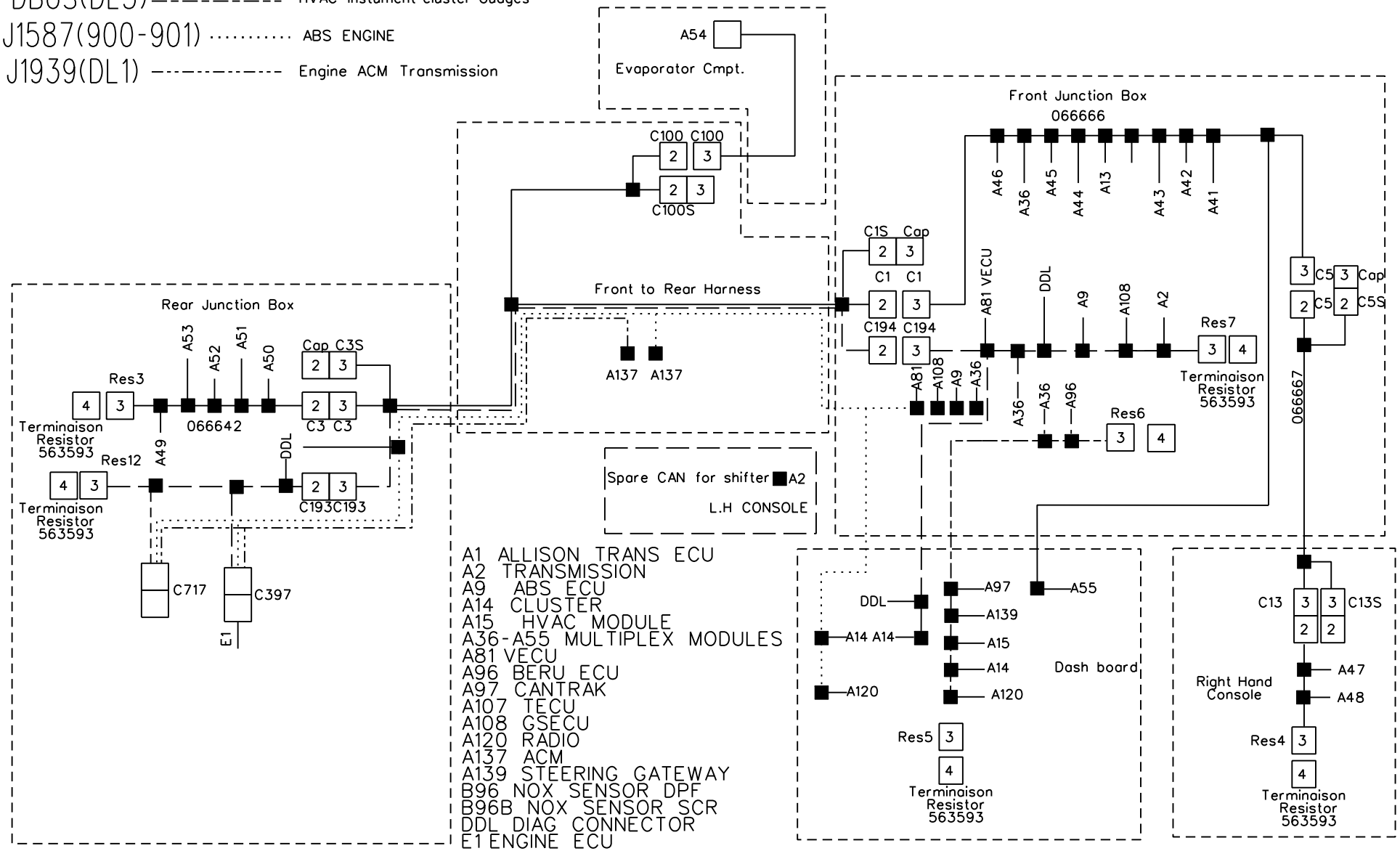

PREVOST	WIRING DIAGRAM	NO: D061140	PAGE: C3	REVISION 07