Transmission I_Shift

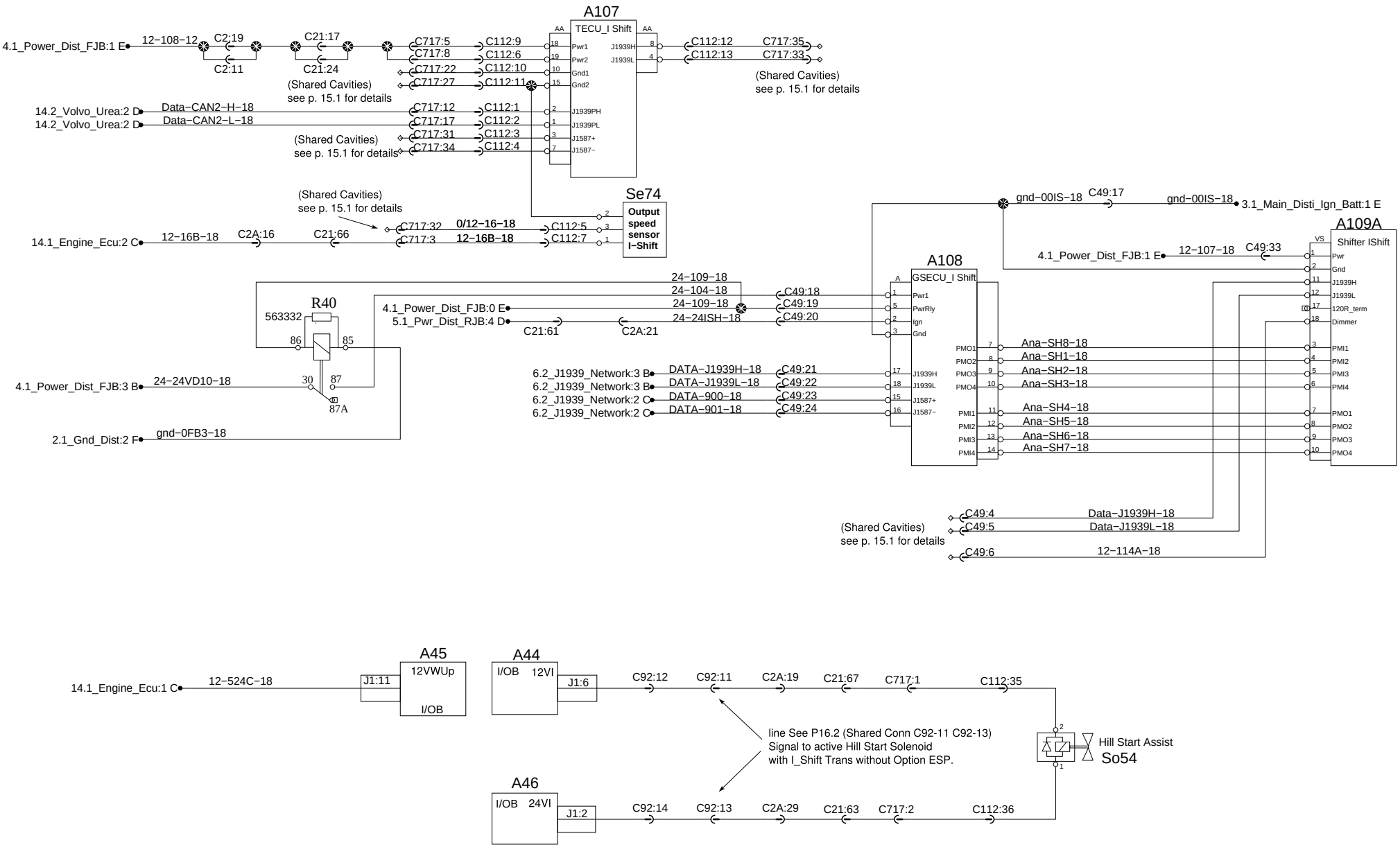

PREVOST®	WIRING DIAGRAM	No:D061150	Page:15.2	Rev:00