ABS ESP

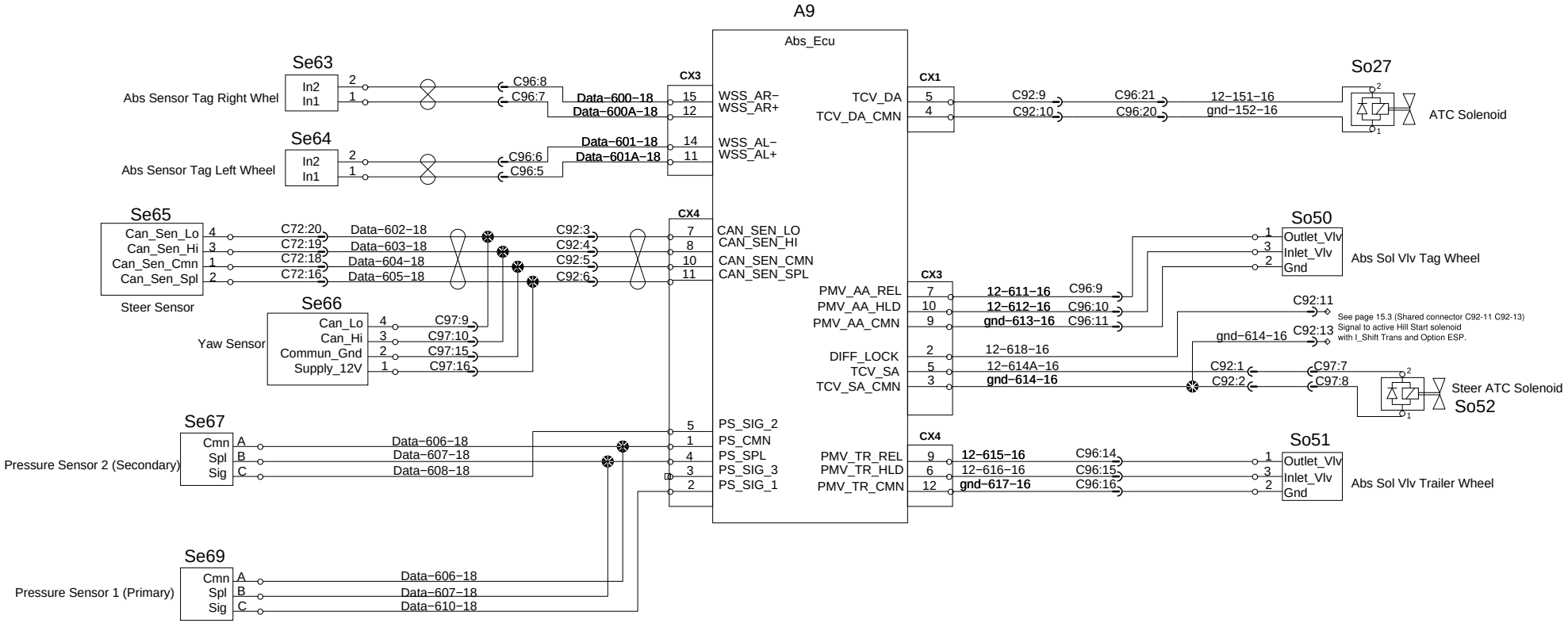
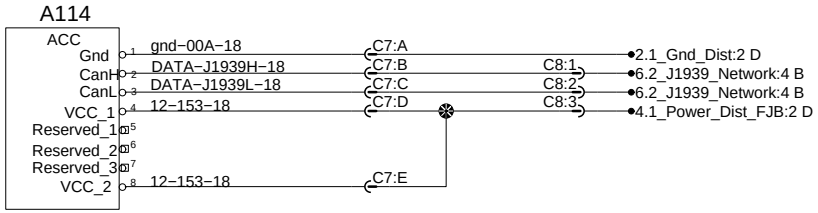
Adaptive Cruise Control Radar