Hat Rack Lightning

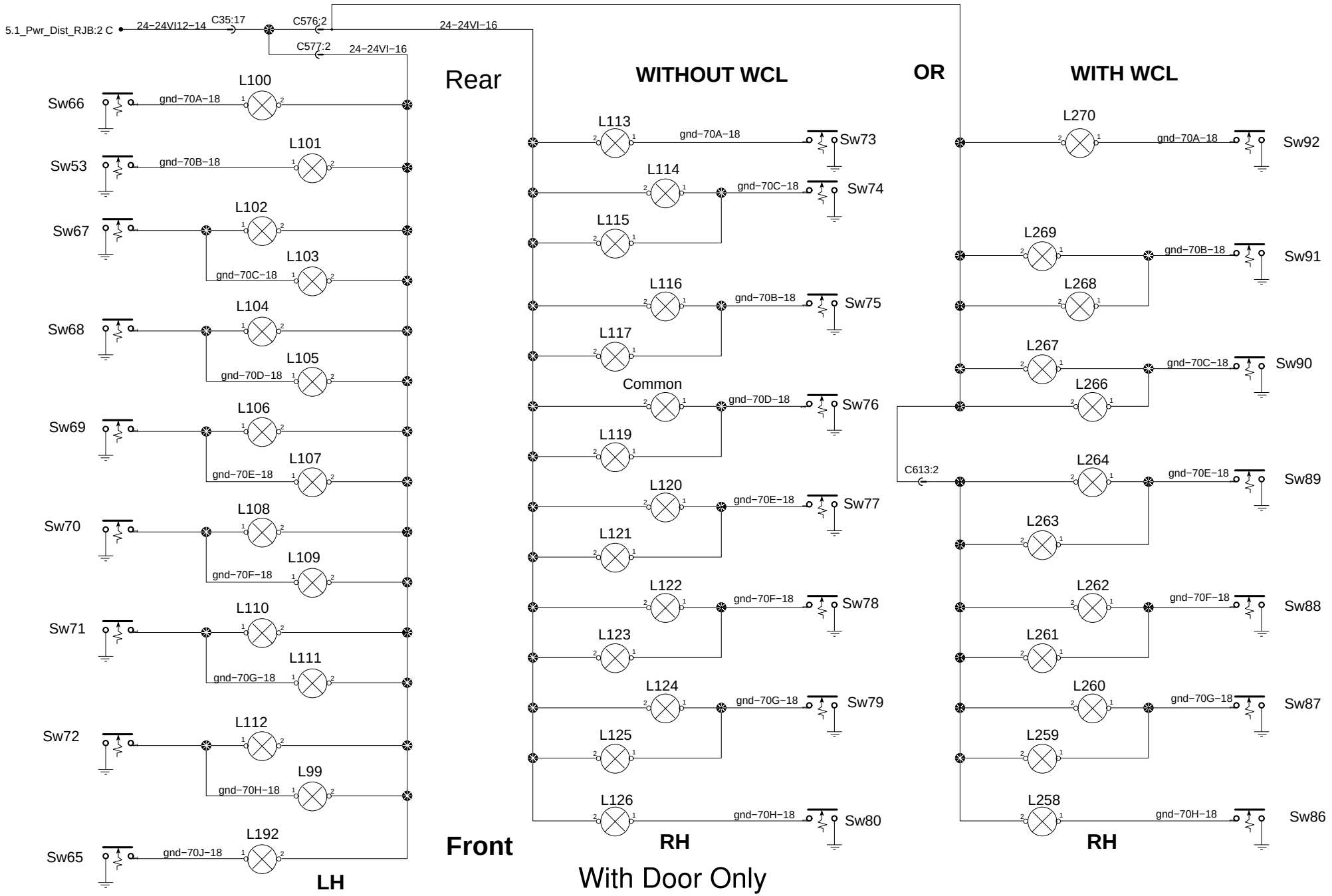

PREVOST®	WIRING DIAGRAM	No:D061150	Page:21.1	Rev:00